FOREWORD

To assist you in your service activities, this manual explains the main characteristics of the new Camry in particular providing a technical explanation of the construction and operation of new mechanism and new technology used.

Applicable models: ACV40, GSV40 series

This manual is divided into 3 sections.

1. **New Model Outline** - Explanation of the product to give a general understanding of its features.
2. **Technical Description** - Technical explanation of the construction and operation of each new system and component.
3. **Appendix** - Major technical specifications of the vehicle.

CAUTION, NOTICE, *REFERENCE* and **NOTE** are used in the following ways:

CAUTION	A potentially hazardous situation which could result in injury if instructions are ignored.
NOTICE	Damage to the vehicle or components may occur if instructions are ignored.
REFERENCE	Explains the theory behind mechanisms and techniques.
NOTE	Notes or comments not included under the above 3 titles.

For detailed service specifications and repair procedures, refer to the following Repair Manuals:

Manual Name	Pub. No.
▶2007 Camry Repair Manual	RM0250U
▶2007 Camry Electrical Wiring Diagram	EM0250U

All information contained herein is the most up-to-date at the time of publication. We reserve the right to make changes without prior notice.

TOYOTA MOTOR CORPORATION

© 2006 TOYOTA MOTOR CORPORATION
All rights reserved. This book may not be reproduced or copied, in whole or in part, without the written permission of Toyota Motor Corporation.
First Printing: Jun. 00, 2006 01-060000-00

EXTERIOR APPEARANCE

Front View

025MO01TE

Rear View

025MO02TE

MODEL CODE

ACV40	L	-	A	E	M	N	K	A
1	2		3	4	5	6	7	8

1	BASIC MODEL CODE
	ACV40 : With 2AZ-FE Engine GSV40 : With 2GR-FE Engine

2	STEERING WHEEL POSITION
	L : Left-Hand Drive

3	PRODUCTION BASE
	A : TMC Production C : TMMK*1 Production

4	BODY TYPE
	E : 4-Door Sedan

5	GEAR SHIFT TYPE
	M : 5-Speed Manual, Floor A : 5-Speed Automatic, Floor T : 6-Speed Automatic, Floor

6	GRADE
	N : LE G : XLE S : SE

7	ENGINE SPECIFICATION
	K : DOHC and SFI

8	DESTINATION
	A : U.S.A.

*1: Toyota Motor Manufacturing, Kentucky, Inc.

MODEL LINE-UP

Destination	Engine	Body Type	Grade	Transaxle		
				E351	U250E	U660E
U.S.A.*2	2AZ-FE	4-Door Sedan	LE	ACV40L-AEMNKA	—	—
				ACV40L-CEMNKA	—	—
				—	ACV40L-AEANKA	—
				—	ACV40L-CEANKA	—
			XLE	—	ACV40L-AEAGKA	—
				—	ACV40L-CEAGKA	—
			SE	ACV40L-CEMSKA	—	—
				—	ACV40L-CEASKA	—
	2GR-FE		LE	—	—	GSV40L-AETNKA
				—	—	GSV40L-CETNKA
			XLE	—	—	GSV40L-AETGKA
				—	—	GSV40L-CETGKA
			SE	—	—	GSV40L-CETSKA

*2: Package options for California, US Dependencies, Canada and Mexico are included.

EXTERIOR

Front View

▶ Dynamic modernism has been produced by providing a solid-looking hood shape from the front grille to the center of the hood and framing the hood with the left and right fenders.

▶ The front design, with minimum surface boundaries between the hood, grille, top mark and bumper, stretches out from the impressively projecting top mark.

▶ The headlights have a long, narrow design, which incorporates two accent lines, producing a crystal-like texture and boldness.

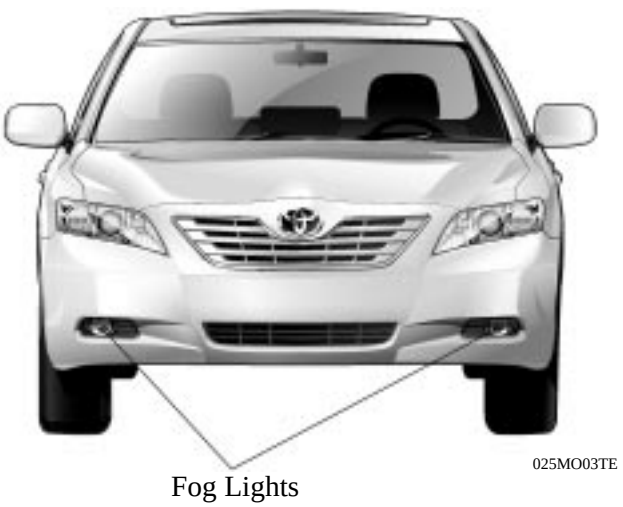

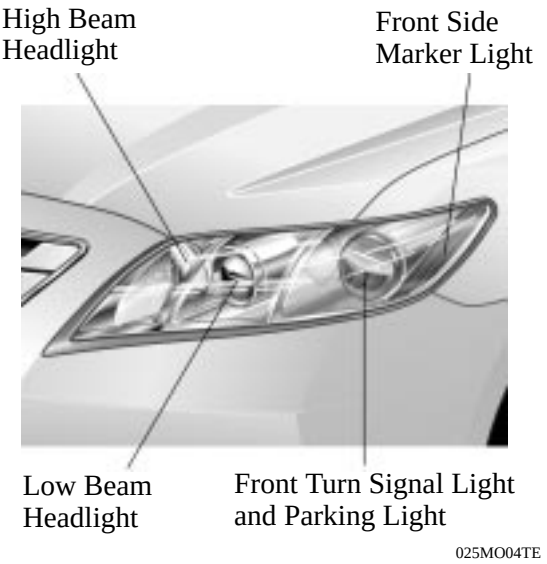

Rear View

▶ Power and modernity have been produced by providing a solid-looking body shape from the luggage door to the center of the bumper and framing the luggage door with the left and right fenders.

▶ The edge of the rear combination light has been extended further into the side of the body, and the inner lens portion is ingot-effect white, expressing modernity and width.

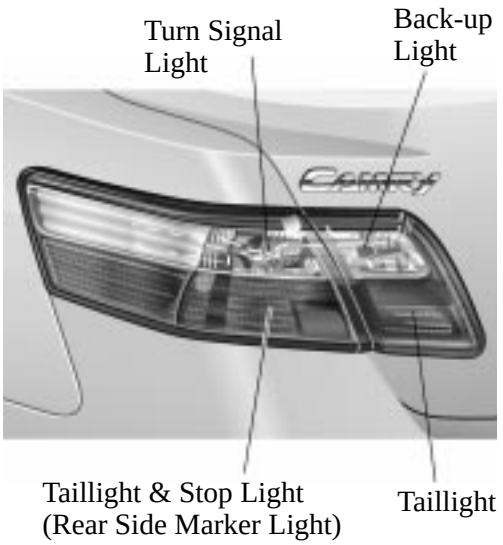

Side View

In order to express a dynamic 3-dimentional form, the extruded front and rear fender shapes have been incorporated into the body design, which is based on straight lines.

025MO07TE

Tire & Disc Wheel

Tire	Size	P215/60R16	P215/60R16
Disc Wheel	Size	16 x 6 1/2 JJ	16 x 6 1/2 J
	Material	Steel with Full Cap	Aluminum with Center Ornament
	P.C.D.*	114.3 mm (4.5 in.)	114.3 mm (4.5 in.)
	Off Set	45 mm (1.8 in.)	45 mm (1.8 in.)
Full Cap/Wheel Design		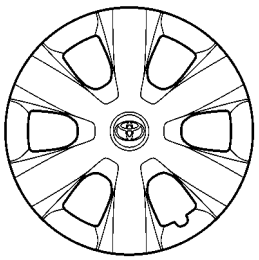 025MO12Y	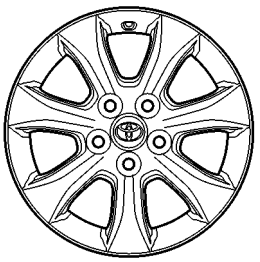 025MO13Y
Tire	Size	P215/60R16	P215/55R17
Disc Wheel	Size	16 x 6 1/2 J	17 x 7 J
	Material	Aluminum with Center Ornament	Aluminum with Center Ornament
	P.C.D.*	114.3 mm (4.5 in.)	114.3 mm (4.5 in.)
	Off Set	45 mm (1.8 in.)	45 mm (1.8 in.)
Full Cap/Wheel Design		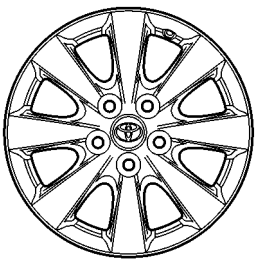 025MO14Y	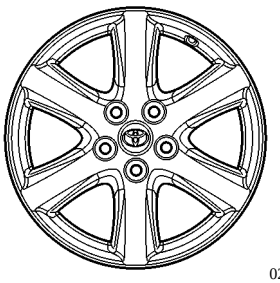 025MO15Y

*: Pitch Circle Diameter

Sporty Exterior

In order to accentuate the sporty looking exterior, the following exclusive parts have been provided for SE grade models.

(1) Front Under Spoiler

(2) Radiator Grille

(3) Rear Spoiler*

(4) Rear Under Spoiler

(5) Rocker Molding

(6) Disc Wheel

*: Optional

Exterior Color List

Color No.	Color Name	Color No.	Color Name
040	Super White 2	4Q2	Beige Mica Metallic
1D4	Silver Metallic	776	Turquoise Mica Metallic
1G3	Gray Metallic	8S4	Light Blue Metallic
202	Black	8T5	Dark Blue Mica
3R3	Red Mica Metallic	—	—

INTERIOR

Instrument Panel

A light, sporty and open feel has been achieved with lines that flow from the center cluster to both left and right, seemingly floating on the instrument panel lower.

025MO16TE

Center Cluster

▶ The center cluster has been designed to be fresh and clear. By making the LCD display larger and putting the display and the switches closer together, both ease of use and freshness have been achieved.

▶ Light is emitted by the entire panel at night, creating a fresh atmosphere.

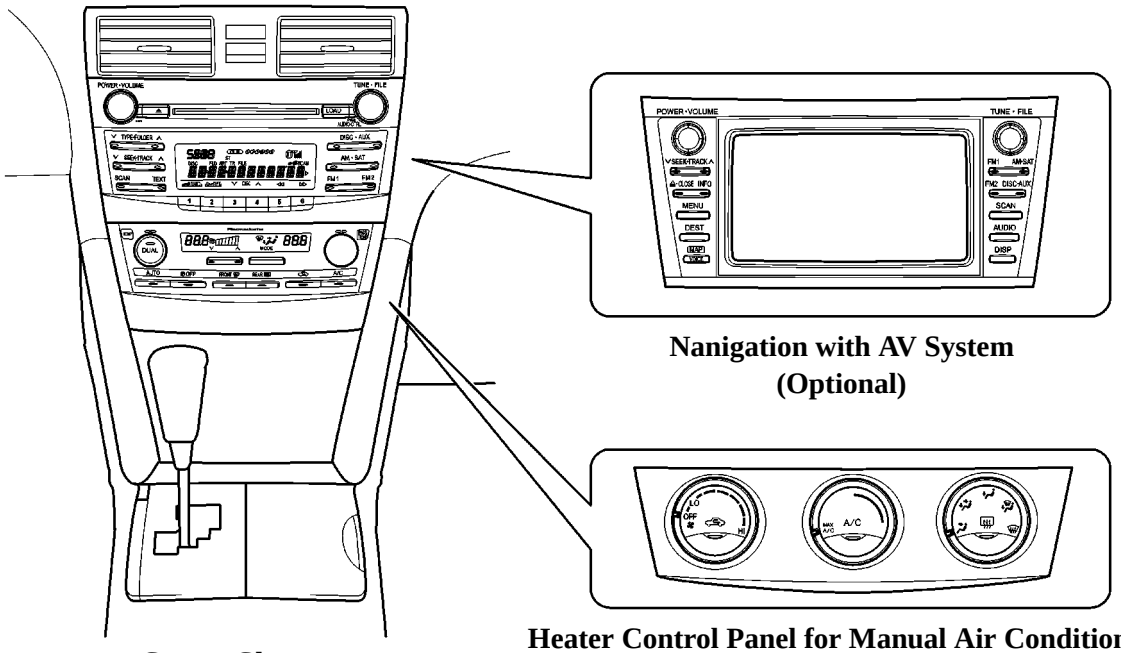

Nanigation with AV System (Optional)

Center Cluster (XLE Grade Models)

Heater Control Panel for Manual Air Conditioning System (LE Grade and SE grade Models)

025MO17TE

Combination Meter

- ▶ A large 4-meter optitron meter is used on LE and XLE grade models.
- ▶ Through the use of eclipse-like illuminations, the vast expanse and excitement of outer space have been produced.
- ▶ A normal display type 4-meter combination meter is used on SE and grade models.
- ▶ The multi-information display is provided in the center of the speedometer on XLE grade models.
- ▶ The multi-information display indicates warnings, DTCs, the odo/tripmeter and cruise information (outside temperature, driving range, average fuel consumption since refueling, distance driven since engine start and average speed since engine start).

Optitron Display Type Combination Meter
(XLE Grade Models with 2GR-FE Engine for U.S.A.)

025MO20TE

Welcome Function

When the driver starts the engine, the graduated illumination sequence of the combination meter, audio and heater control panel gives the impression of the driver being welcomed aboard. This function is provided only on XLE grade models.

(1) 0.7 seconds after engine start

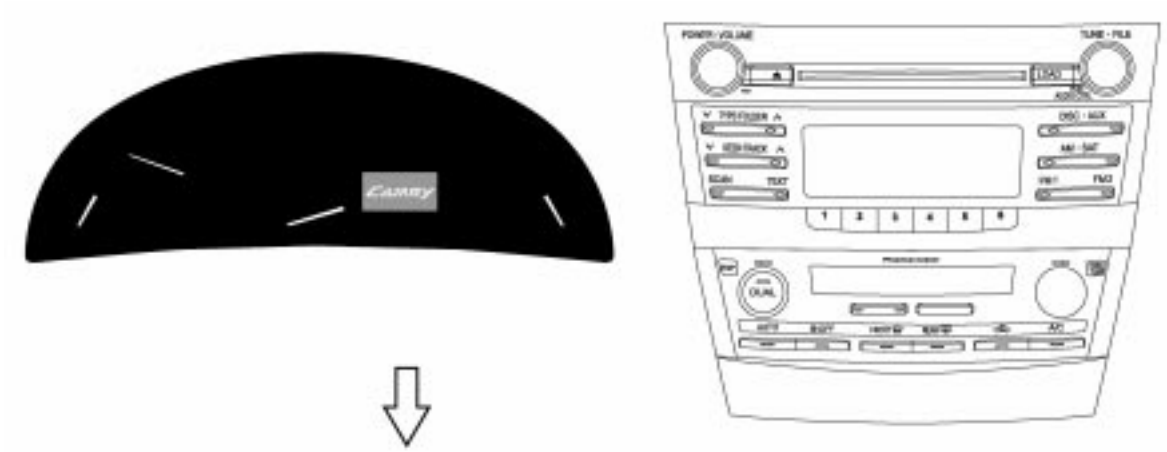

(2) Approximately 2 seconds after engine start

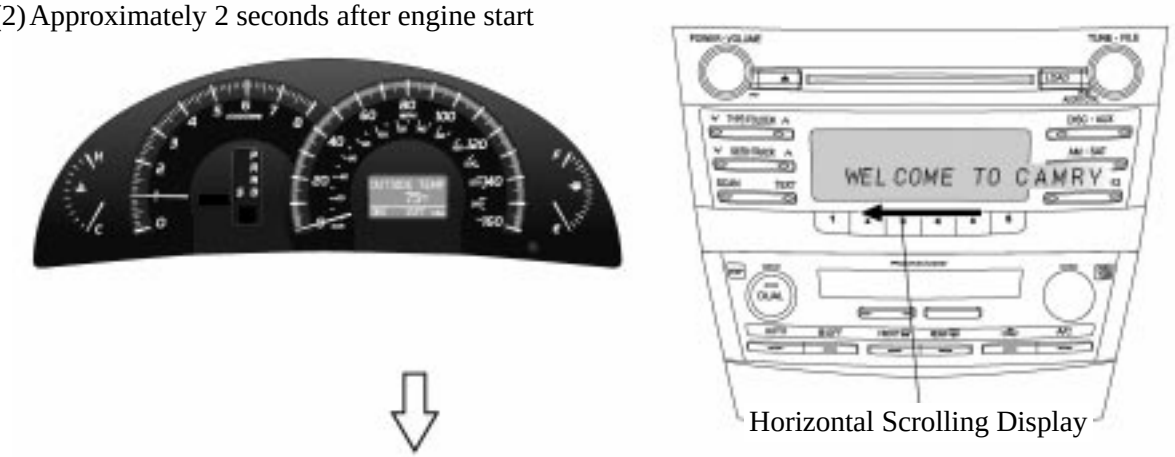

(3) Approximately 3 seconds after engine start

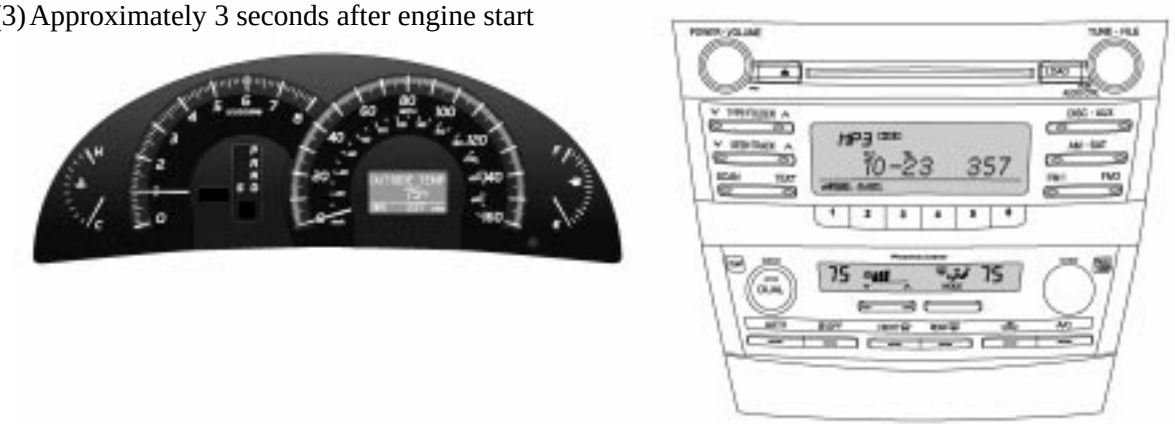

025MO21TE

Shift Lever

On the ’07 Camry, 3 types of shift lever are available, in accordance with the type of transaxle: Manual transaxle shift lever, gate type 5-speed automatic transaxle shift lever and multi-mode 6-speed automatic transmission shift lever.

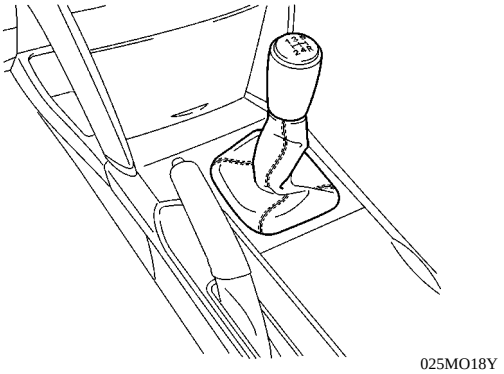

Manual Transaxle Shift Lever

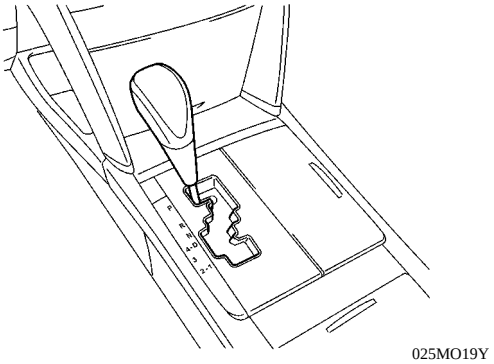

Gate Type 5-speed Automatic Transaxle Shift Lever

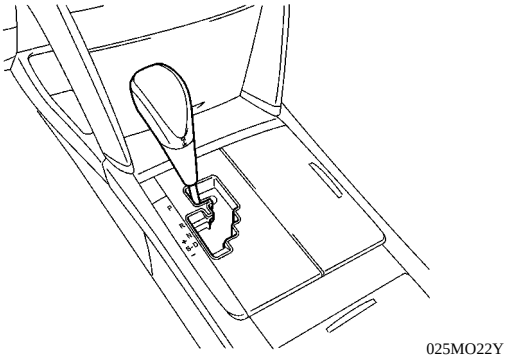

Multi-mode 6-speed Automatic Transmission Shift Lever

Steering Wheel

▶ The following three types of steering wheels are available: 4-spoke urethane, 4-spoke leather-wrapped and 3-spoke leather-wrapped.

▶ A newly designed steering pad switch is used, which allows the audio, automatic air conditioning system, multi-information display, telephone and navigation voice recognition systems to be easily operated.

▶ The cruise control switch have been incorporated in the steering wheel for ease of operation.

	4-Spoke Urethane	4-Spoke Leather-wrapped	3-Spoke Leather-wrapped
Design	025MO23Y	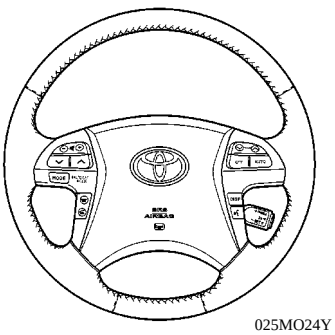 025MO24Y	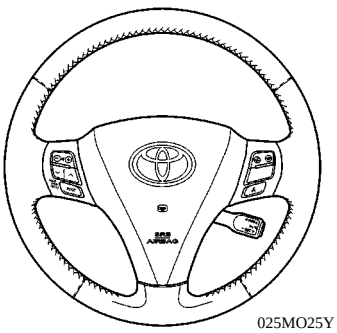 025MO25Y
Grade	LE	XLE	SE

Console Box

- ▶A storage pocket for items such as cellular phones and wallets has been provided beside the front console (1).
- ▶The large capacity front box contains storage space for 9 CDs, a power source and the AUX adapter (2).In addition, on the inner right side of the box, there is a plug hole that allows the inside of the box to be accessed from the side.
- ▶Two drink cup holders, which can hold large sized drink cups and have a lid, have been provided on the center console, beside the shift lever on AT models (3). In addition, a storage box with a lid has been provided behind the shift lever on XLE grade models (4), On LE and SE grade models, a storage box without a lid has been provided. On MT models, drink cup holders with a lid have been provided behind the shift lever.
- ▶The rear console box has a large capacity and a storage tray has been provided for keeping small articles (5). The console box lid can be used as an armrest (6), the one used on XLE grade models slides 100 mm (3.94 in).

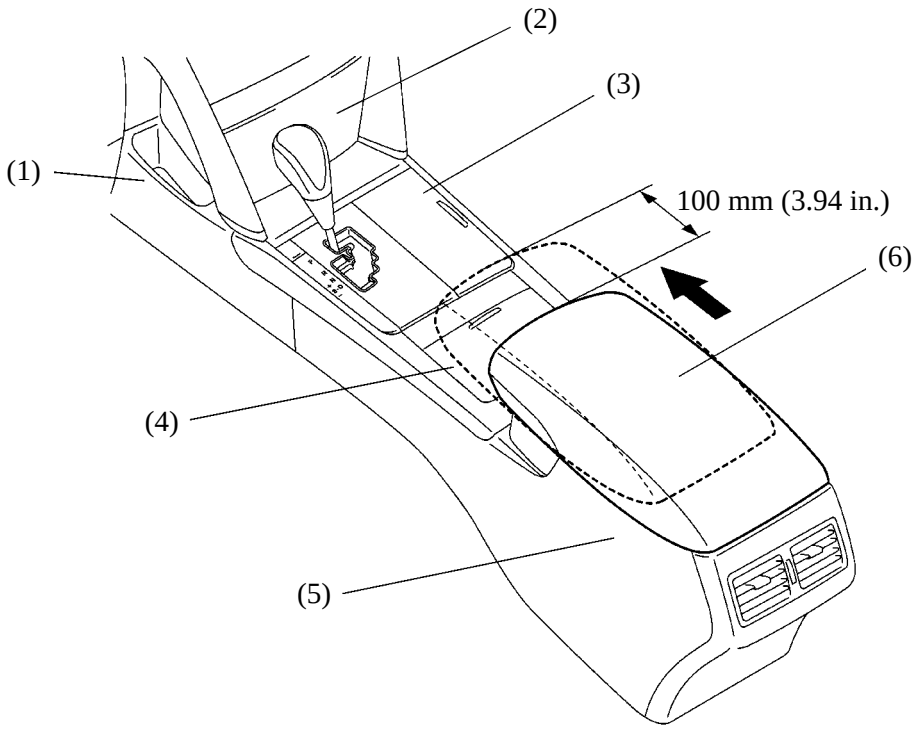

025MO38Y

Console Box for XLE Grade Models

Rear Seat

▶ A fold-down function has been provided for the rear seat on LE grade models. By allowing the seat lock to be released from the trunk compartment, convenience has been improved.

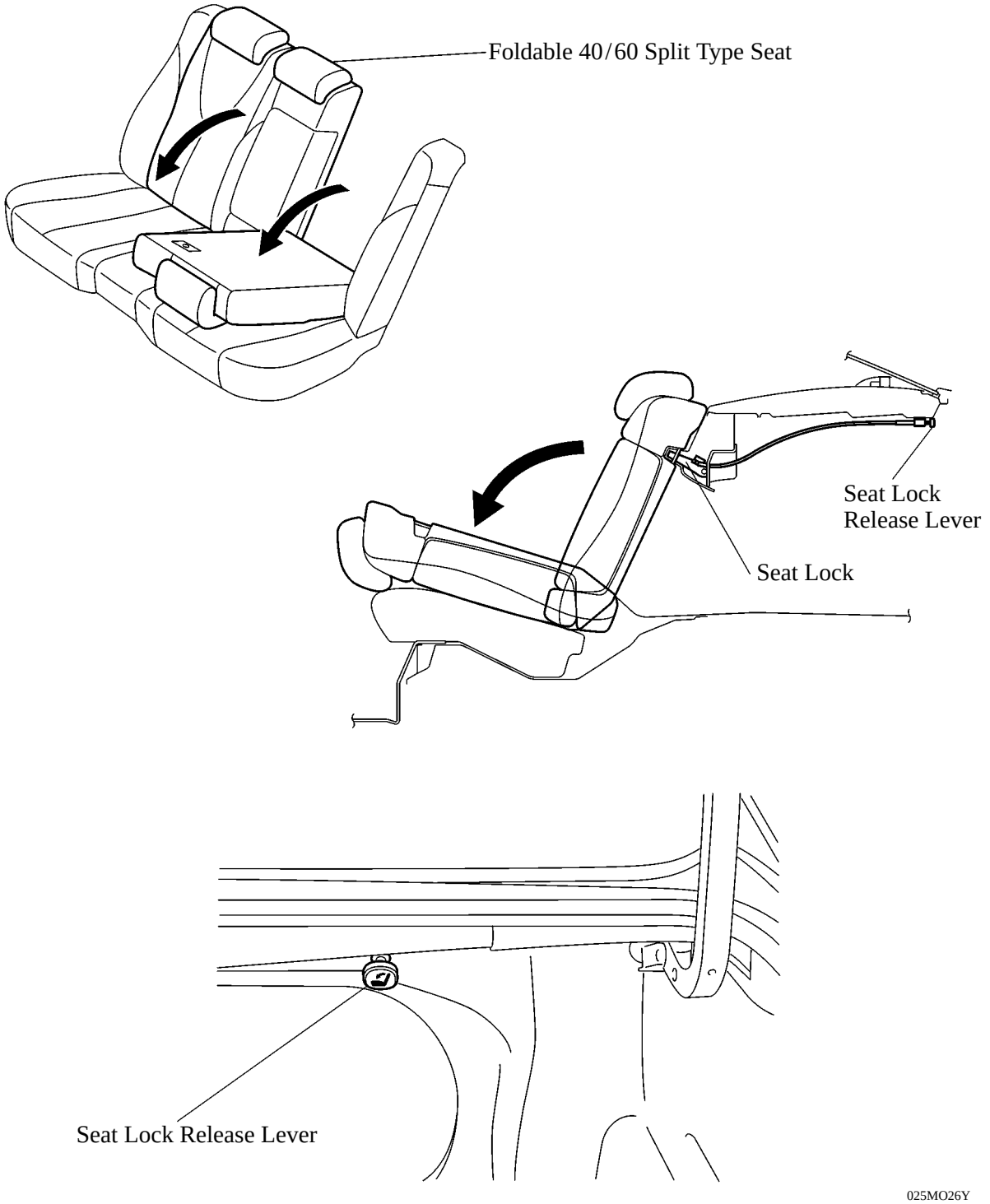

Foldable Seat and Seat Lock Release Lever
(LE Grade Models)

▶ A reclining function has been provided for the rear seat on XLE grade models. The rear seat can be reclined in 3 steps (8● each) and has a maximum hip angle of 103.5 , a comfortable rest position.

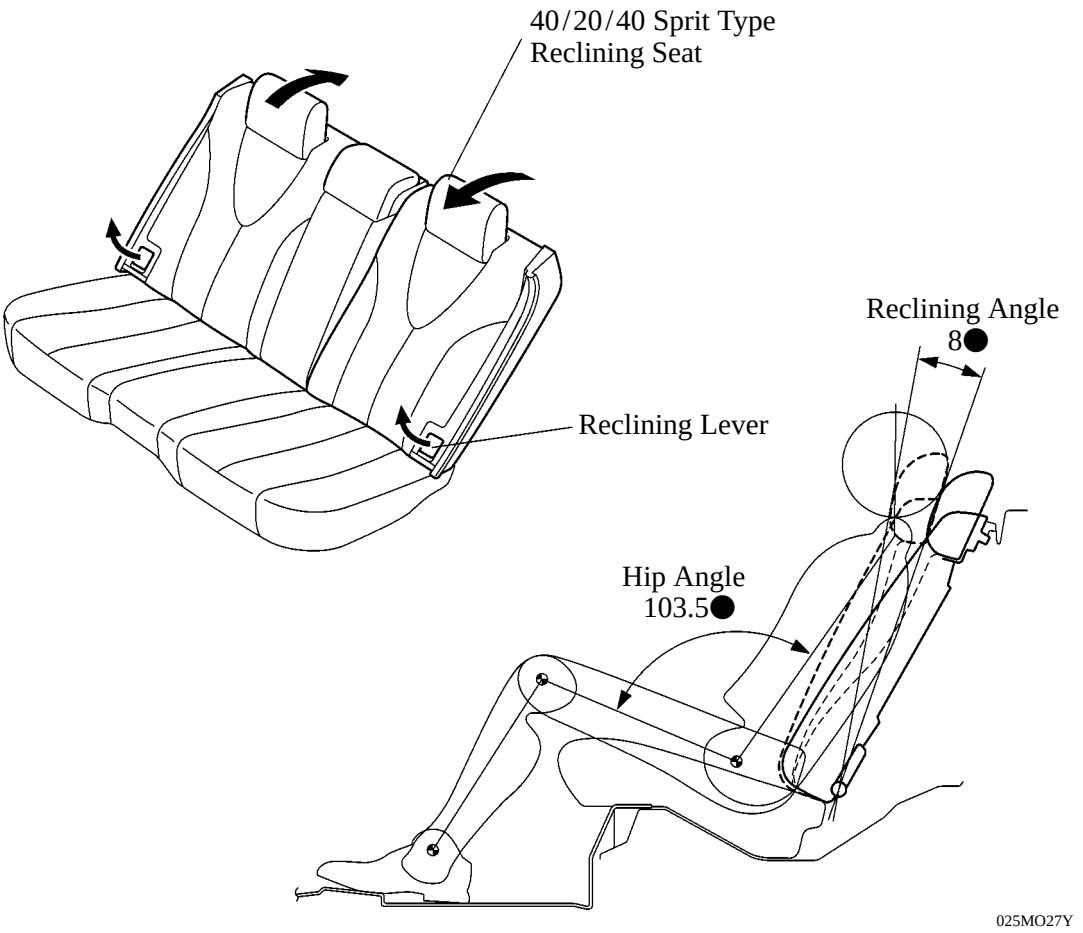

Sprit Type Reclining Seat
(XLE Grade Models)

EQUIPMENT

Navigation with AV System

Through the use of the GPS (Global Positioning System) and the map data in a DVD (Digital Versatile Disc), the navigation with AV (Audio Visual) system analyzes the position of the vehicle and indicates that position on the map that is displayed on the screen. Additionally, it provides voice instructions to guide the driver along the route to reach the destination that has been selected.

The language of the voice navigation can be selected from among 3 languages: English, French and Spanish.

The navigation system employs a voice recognition function with a voice recognition microphone installed in the overhead console. The voice recognition function can be turned on and off using the switch on the steering wheel.

The display, which consists of a wide 7.0-inch LCD (Liquid Crystal Display) screen with a pressure sensitive touch panel, is easier to use.

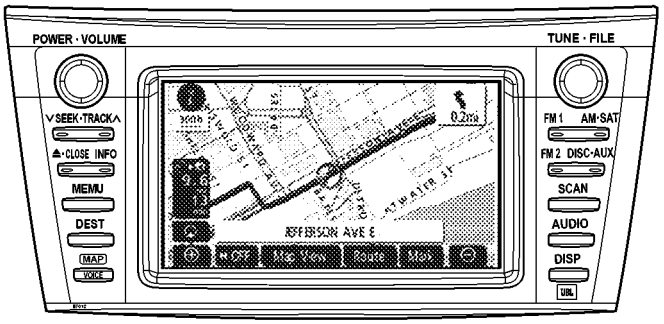

025MO28Y

Audio System

The large and varied original LCD panels and large switched have been provided for each audio head unit, improving visibility and ease of use.

By implementing new DSP (Digital Signal Processor) technology with psychoacoustic theory, less distorted, clear, powerful sound quality has been achieved.

JBL's Premium Sound System, consisting of their stereo amplifier and speaker system, has been provided for XLE grade models as standard. On other models, it is available as an option.

— REFERENCE —

Psychoacoustic Theory:

Psychoacoustic theory is technology that exploits human perceptions (sensory illusions). Through the implementation of this technology, without changing the speaker sizes or locations, listeners can sense deeper bass sound (1) and feel as if the speakers were located at eye level, despite them being located in low positions like door speakers (2).

(1) Bass Sound Reproduction Principle: Since olden times, when pipe organs are built in churches, due to the difficulty of housing long resonating pipes for very low tones, a technique has been used which reproduces low tones through the utilization of two short pipes.
When two pipes, of which the frequencies are 100 Hz and 150 Hz, are sounded simultaneously to reproduce a note at 50 Hz, human brains discern four different notes at 100 Hz, 150 Hz, 250 Hz (100 Hz + 150 Hz) and 50 Hz (150 Hz - 100 Hz). Among these, human brains perceive the frequency difference of 50 Hz most strongly.
By electrically generating differential components from fundamental notes for very low tones and emitting them through speakers, the human brains sense the deep bass sound despite it being not emanated from the speakers.

(2) Virtual Sound Source Layout: When the theory of HRTFs (Head Related Transfer Functions) is employed in the vertical direction, human brains perceive the source of sounds emitted from the speakers in the lower positions as if it was at windshield level.
HRTFs are acoustic transfer functions from the sound source to the ears.
It is said that humans detect the location of sound sources through time differences and physical reflective interference; the horizontal direction is recognized through the time difference between the sound reception of the left and right ears, and the vertical direction is discerned through the reflective interference caused by the head and earlobes.
Sound sources can be virtually reproduced by incorporating the HRTFs into amplifiers and emitting the sound through speakers.

Audio Head Unit

The three types of audio head unit are available.

Grade/Application	Design	Specifications
LE/standard SE/standard	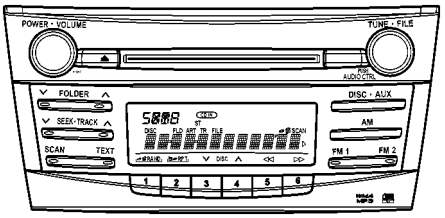 025MO29Y	AM/FM Tuner CD (MP3, WMA Compatible*1) DSP*2/ASL*3 6-Speaker System Maker: Fujitsu Ten
JBL Premium Sound System		
XLE/standard LE/option SE/option	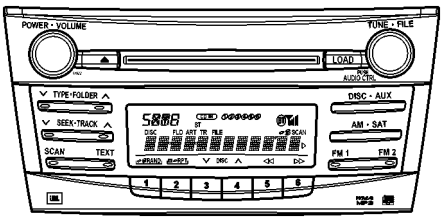 025MO30Y	AM/FM Tuner In-Dash 6-CD Changer (MP3, WMA Compatible*1) Bluetooth® Hands-free System DSP*2/ASL*3 JBL Stereo Amplifier 8-Speaker System Maker: Panasonic & JBL
Option	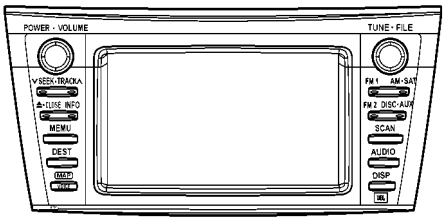 025MO31Y	7.0-inch Display AM/FM Tuner In-Dash 4-CD Changer (MP3, WMA Compatible*1) Bluetooth® Hands-free System DSP*2/ASL*3 JBL Stereo Amplifier 8-Speaker System Maker: Denso & JBL

*1: Compatible with the compressed sound and music files complying with MP3 (MPEG Audio Layer-3) standard and WMA (Windows Media Audio)
*2: Digital Sound Processor
*3: Automatic Sound Levelizer

AUX Adapter

An AUX adapter, which is located in the front console box, is used by the audio system as an input terminal for portable audio devices.

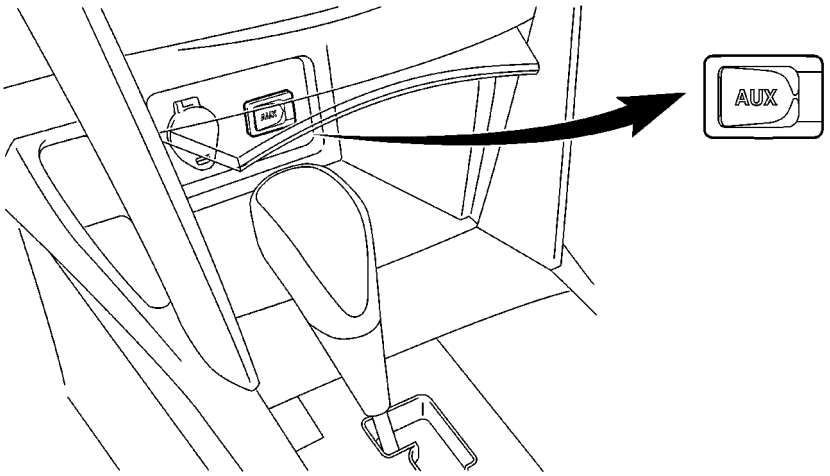

025MO32Y

Speaker

▶ Speaker Location ●

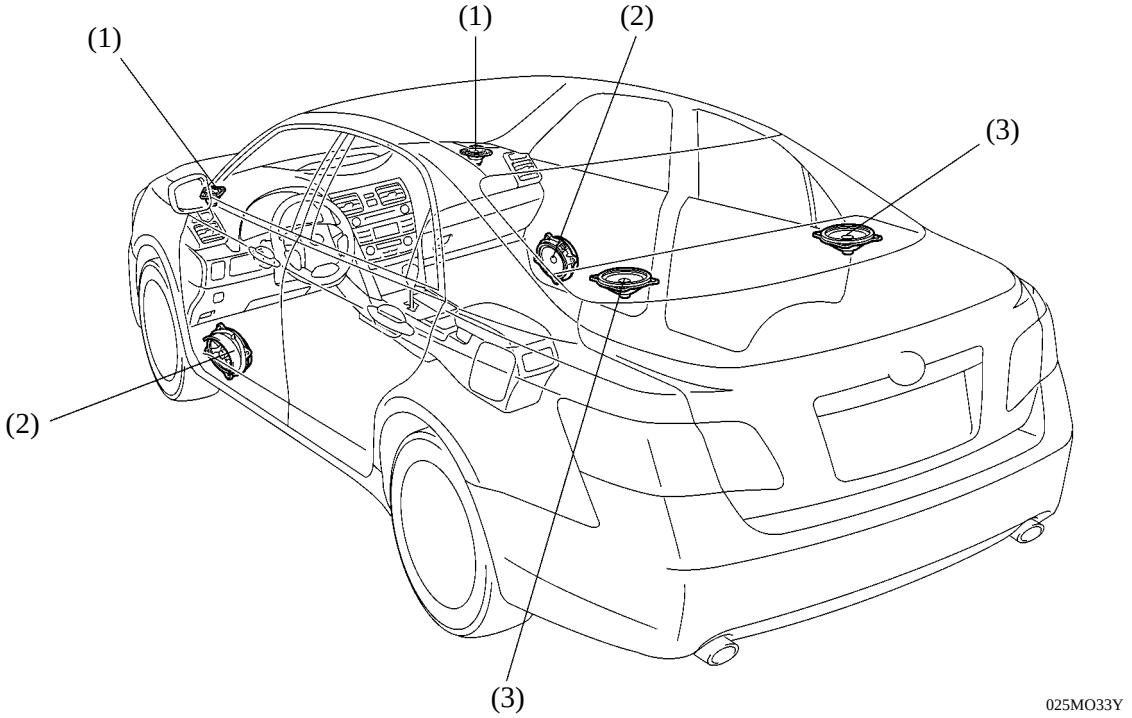

▶ Speaker Specifications ●

Location	Speaker Type	Caliber	Impedance	Input Rated
(1)	Front Tweeter x 2	65 mm (2.6 in.)	4 Ω	17.5 W
(2)	Front Midrange x 2	150 x 225mm (6.0 x 9.0 in.)	4 Ω	20 W
(3)	Rear Full range x 2	150 x 225mm (6.0 x 9.0 in.)	4 Ω	20 W

▶ Speaker Specifications (JBL Premium Sound) ●

Location	Speaker Type	Caliber	Impedance	Input Rated
(1)	Front Tweeter x 2	65 mm (2.6 in.)	2 Ω	20 W
(2)	Front Midrange x 2	150 x 225mm (6.0 x 9.0 in.)	2.2 Ω	36 W
(3)	Rear Midrange x 2	150 x 225mm (6.0 x 9.0 in.)	2.2 Ω	36 W
	Rear Tweeter x 2	COAXIAL	6.5 Ω	18 W

Bluetooth® Hands-free System

Bluetooth® is a high-speed wireless data communication system that uses the 2.4 GHz frequency band prescribed by the Bluetooth SIG (Special Interest Group), with a communication speed of 1 Mbps. By simply bringing a cellular phone that has been pre-registered on the audio head unit or the multi display into the vehicle, the user can talk hands-free. Thus, it is no longer necessary to connect the telephone to a hands-free connection device as in the past.

A Bluetooth® hands-free system, which enables the user to make and receive calls and talk hands-free by operating the switches on the steering pad or the screen display, is provided on the audio head unit.

A Bluetooth® hands-free system consists of an audio head unit, a microphone in the overhead console, and the switches on the steering pad.

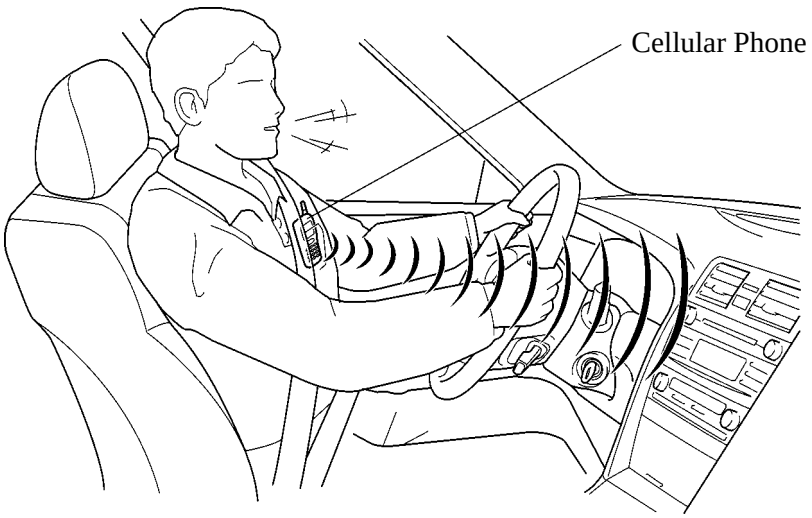

025MO34Y

Smart Key System

The smart key system provides a key with a bi-directional communication function. Accordingly, by enabling the certification ECU to recognize the presence of the key within the detection area, this system can lock or unlock the doors, or start the engine without the use of the key, as long as the user has the key in his/her possession.

025MO35Y

Door Unlock

025MO44Y

Door Lock

025MO36Y

Trunk Open

025MO37Y

Engine start

Glass

UV reduction glass or HSEA (High Solar Energy Absorbing glass), which blocks the ultraviolet and infrared rays in the sunlight, is used to ensure comfort.

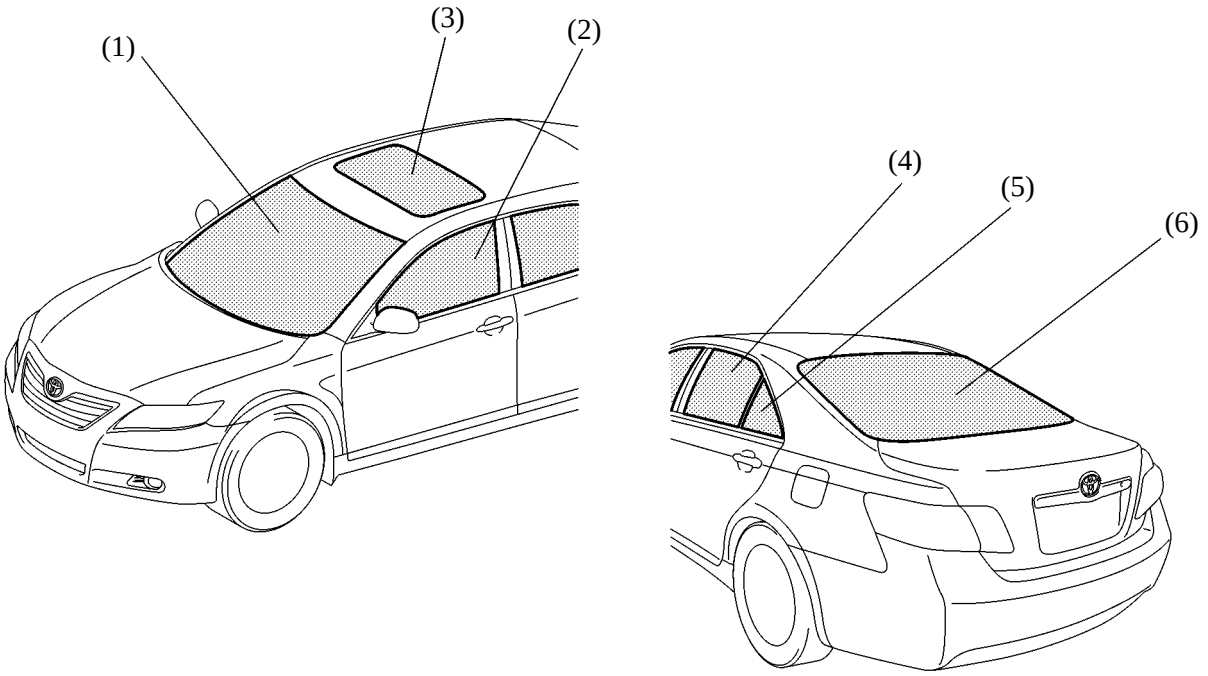

025MO39TE

Glass Portion		Color	Glass Type		Ultraviolet Reduction Rate	Visible Light Penetration Rate
			TMC made Models	TMMK made Models		
(1)	Windshield	Green with Dark Shade	Laminated & UV Cut	Laminated & HSEA*	100%	70%
(2)	Front Door	Green	Tempered & UV Cut	Tempered & HSEA*	90%	～70%
(3)	Moon Roof Panel	Gray	Tempered	Tempered	93%	20%
(4)	Rear Door	Green	Tempered & UV Cut	Tempered & HSEA*	90%	～70%
(5)	Rear Door Quarter	Green	Tempered & UV Cut	Tempered & HSEA*	90%	～70%
(6)	Back Window	Green	Tempered & UV Cut	Tempered & HSEA*	90%	～70%

*: High Solar Energy Absorbing Glass

PERFORMANCE

Power Train

Engine

Type	2AZ-FE		2GR-FE
	Models except for California Package	Models for California Package	
No. of Cylinders & Arrangement	4-Cylinder, In-line		6-Cylinder, V Type
Valve Mechanism	16-Valve DOHC, Chain Drive (with VVT-i)		24-Valve DOHC, Chain Drive (with Dual VVT-i)
Displacement	2362 cm^3 (144.1cu. in.)		3456 cm^3 (210.9cu. in.)
Max. Output [SAE-NET]*1	118 kW @ 6000 rpm (158 HP @ 6000 rpm)	116 kW @ 6000 rpm (155 HP @ 6000 rpm)	200 kW @ 6200 rpm (268 HP @ 6200 rpm)
Max. Torque [SAE-NET]*1	218 N·m @ 4000 rpm (161 ft·lbs @ 4000 rpm)	214 N·m @ 4000 rpm (158 ft·lbs @ 4000 rpm)	336 N·m @ 4700 rpm (248 ft·lbs @ 4700 rpm)

*1: Maximum output and torque rating is determined by revised SAE J1394 standard.

▶ **2AZ-FE Engine ●**

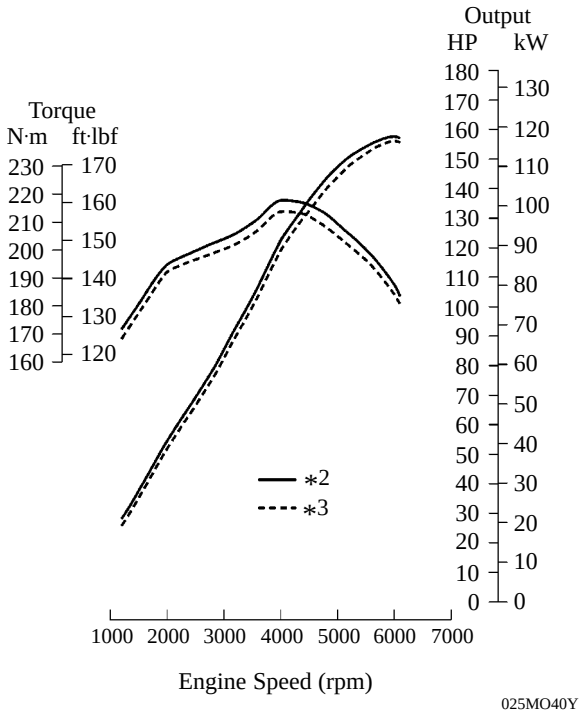

▶ **2GR-FE Engine ●**

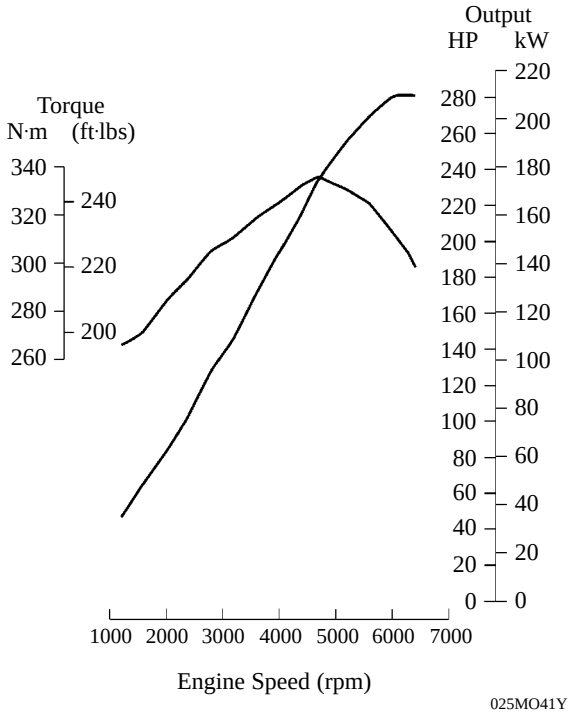

*2: Models except for California Package
*3: Models for California Package

Transaxle

Type		5-Speed Manual	5-Speed Automatic	6-Speed Automatic
		E351	U250E	U660E
Gear Ratio	1st	3.538	3.943*	3.300
	2nd	2.045	2.197*	1.900
	3rd	1.333	1.413*	1.420
	4th	0.972	0.975*	1.000
	5th	0.731	0.703*	0.713
	6th	—	—	0.608
	Reverse	3.583	3.145*	4.148
Differential Gear Ratio		3.944	3.391	3.685*

*: Counter gear ratio included

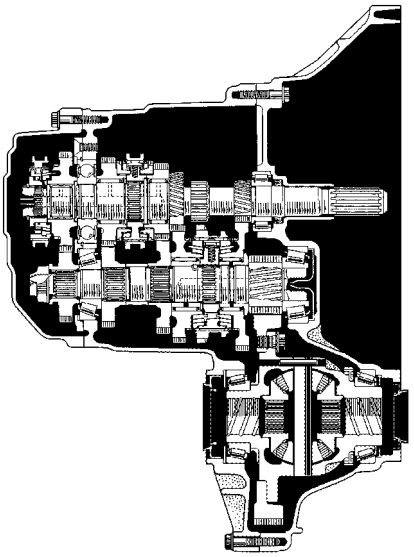

E351 Manual Transaxle

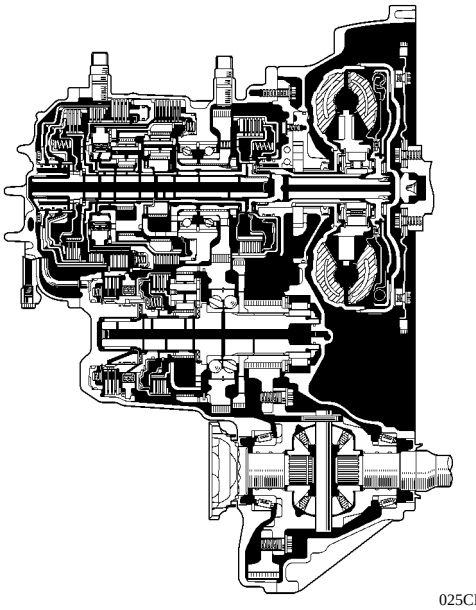

U250E Automatic Transaxle

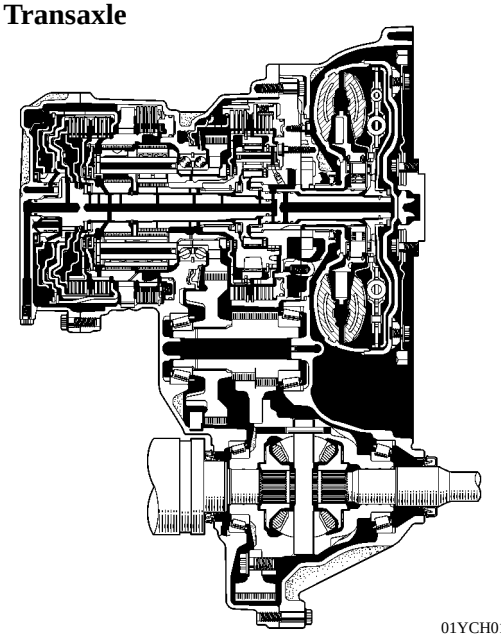

U660E Automatic Transaxle

Chassis

Suspension

Front Suspension	Rear Suspension
MacPherson Strut Type Independent Suspension	Dual Link Mac Pherson Strut Type Independent Suspension

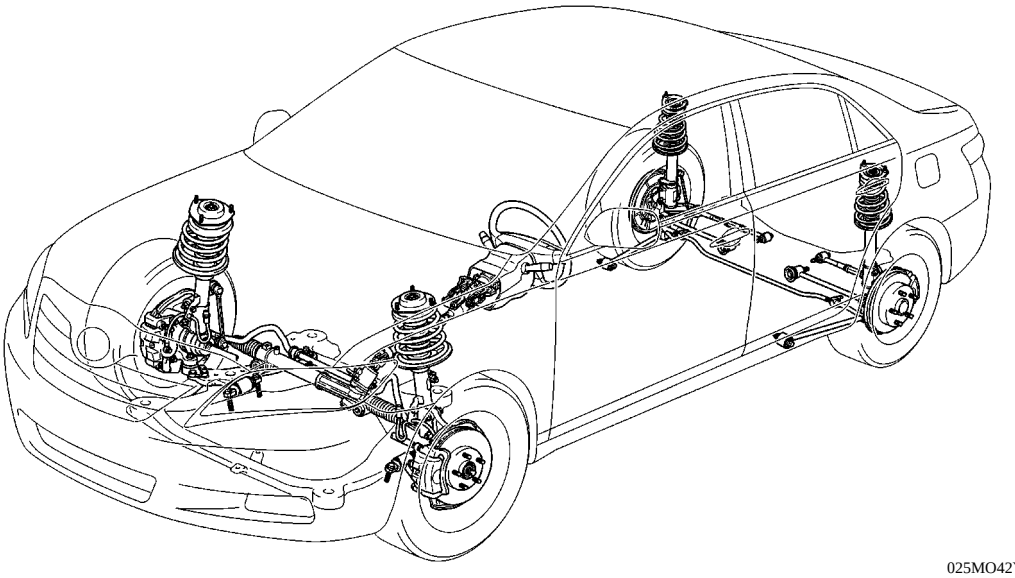

025MO42Y

Steering

Steering Type	Engine Speed Sensing Hydraulic Type Power Steering
Gear Type	Rack & Pinion

Brake

Front Brake Type		Ventilated Disc
Front Rotor Size		296 mm (11.65 in.)
Rear Brake Type		Solid Disc
Rear Rotor Size		281 mm (11.06 in.)
Parking Brake	MT	Center Lever Type
	AT	Foot Pedal Type with Foot Release
Brake Control System		ABS with EBD, Brake Assist ABS with EBD, Brake Assist, TRAC and VSC*

*: Optional

ENVIRONMENT and RECYCLING

Adoption of TSOP & TPO

TSOP (Toyota Super Olefin Polymer), TPO (Thermoplastic Olefin), which have superior recyclability, are actively utilized while the use of chlorine has been reduced as much as possible.

: TSOP (Toyota Super Olefin Polymer)

: TPO (Thermoplastic Olefin)

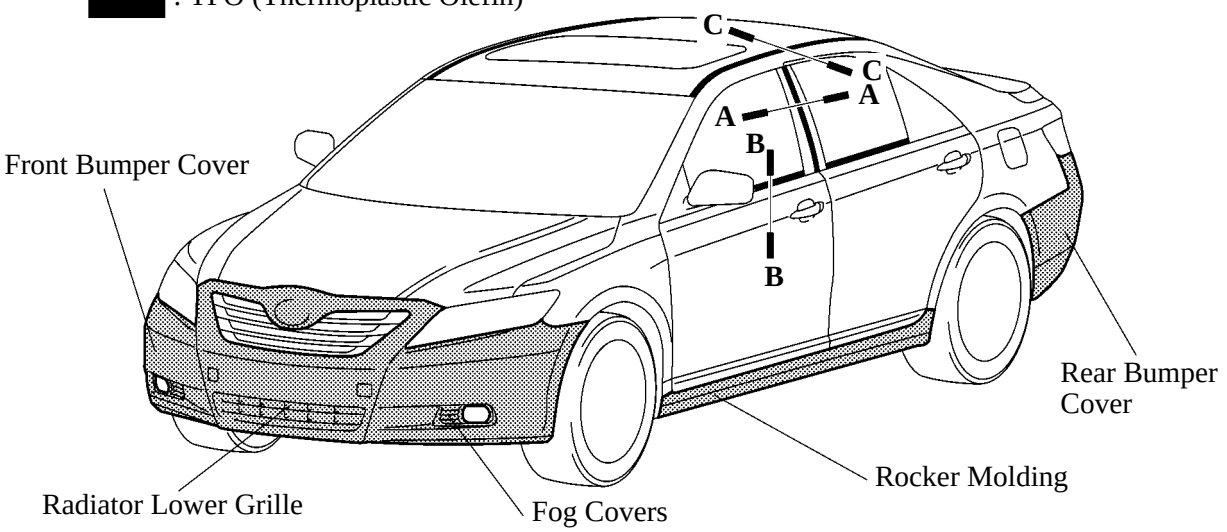

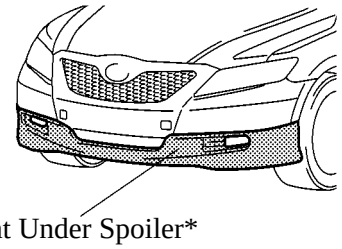

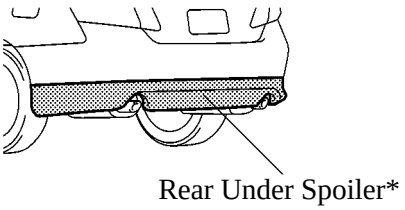

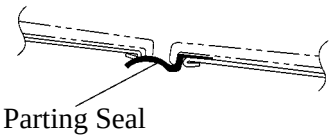

A - A Cross Section

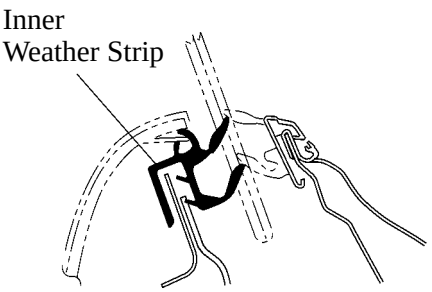

B - B Cross Section

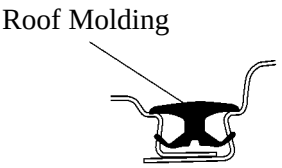

C - C Cross Section

*: Only for SE grade models

025MO43Y

Adoption of Lead-free Parts

By using lead-free parts, the adverse impact on the environment has successfully reduced.

Main Lead-free Parts
▶RaDiator ▶Heater Core ▶Wiring Harness ▶Window Glass Black Coating ▶Wheel Balance Weight

DIMENSIONS

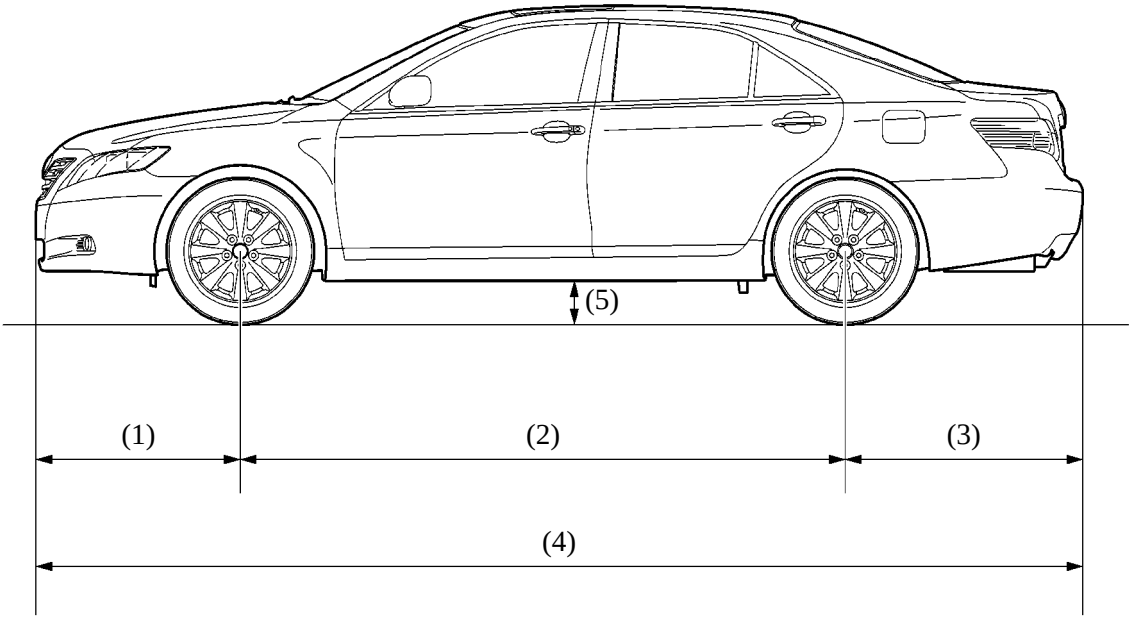

025MO08TE

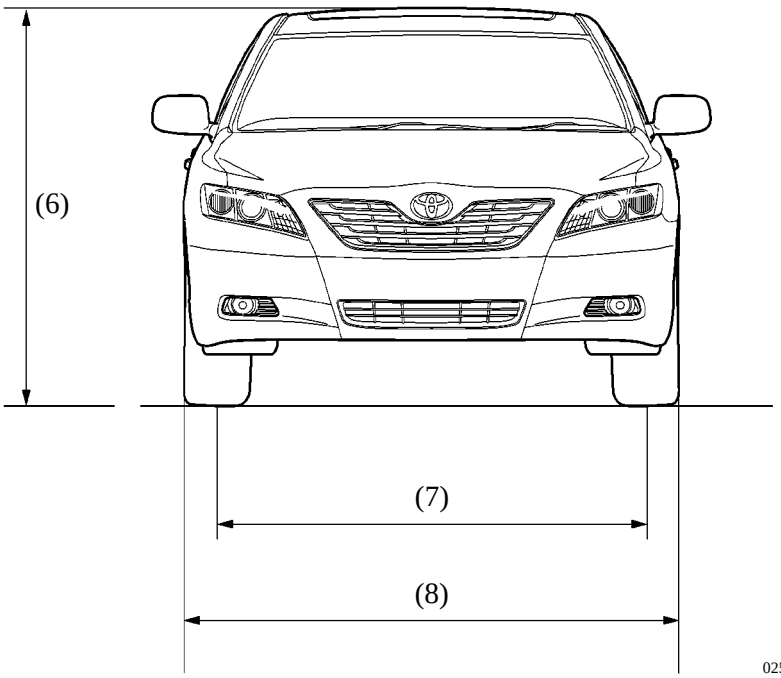

025MO09TE

Engine			2AZ-FE		2GR-FE	
Grade			LE and XLE	SE	LE and XLE	SE
(1)	Front Overhang		945 mm (37.2 in.)			
(2)	Wheel Base		2775 mm (109.3 in.)			
(3)	Rear Overhang		1085 mm (42.7 in.)			
(4)	Overall Length		4805 mm (189.2 in.)			
(5)	Minimum Running Ground Clearance		140 mm (5.5 in.)	135 mm (5.3 in.)	135 mm (5.3 in.)	130 mm (5.1 in.)
(6)	Overall Height		1470 mm (57.9 in.)	1465 mm (57.7 in.)	1470 mm (57.9 in.)	1465 mm (57.7 in.)
(7)	Tread	Front	1575 mm (62.0 in.)			
		Rear	1565 mm (61.6 in.)			
(8)	Overall Width		1820 mm (71.7 in.)			

EQUIPMENT LIST

▶: Standard OP : Option — : None

Grade			LE	XLE	SE
Exterior	Front Bumper	Normal	▶	▶	—
		Sporty	—	—	▶
	Rear Bumper	Normal	▶	▶	—
		Sporty	—	—	▶
	Radiator Grille	Normal	▶	—	—
		Chrome Plated	—	▶	—
		Sporty	—	—	▶
	Rear Spoiler		—	—	OP
	Fairing	Front	▶	▶	▶
		Rear	▶	▶	▶
Chassis	Tire	P215/60R16 94V	▶	▶	—
		P215/55R17 93V	—	—	▶
	Disc Wheel	16 x 6 1/2 JJ Steel	▶	—	—
		16 x 6 1/2 J Aluminum	OP	▶	—
		17 x 7 J Aluminum	—	—	▶
	Brake Control System	ABS with EBD and Brake Assist	▶	▶	▶
		ABS with EBD, Brake Assist, TRAC and VSC	OP	OP	OP
	Tire Pressure Warning System		▶*1	▶*1	▶*1
	Steering Wheel	4-Spoke (Urethane) with Pad Switch	▶	—	—
		4-Spoke (Leather) with Pad Switch	—	▶	—
		3-Spoke (Leather) with Pad Switch	—	—	▶
	Steering System	Engine Speed Sensing Hydraulic Type	▶	▶	▶
		Manual Tilt & Telescope Mechanism	▶	▶	▶
Body	Seat Cover Material	Fabric	▶	▶*2	▶
		Leather	—	OP ▶*3	OP
	Front Seat	Normal	▶	▶	—
		Sporty	—	—	▶
	Rear Seat	Foldable 40/60 Split Type	▶	—	—
		Reclining 40/20/40 Split Type	—	▶	—
		Fixed Type	—	—	▶
	Front Seat Belt	Driver: 3-Point ELR with Pretensioner and Force Limiter	▶	▶	▶
		Passenger: 3-Point ELR with Pretensioner and Force Limiter +ALR	▶	▶	▶
	Rear Seat Belt	3-Point ELR +ALR x 3	▶	▶	▶
	Front Console Box	Metallic	▶	—	▶
		Woody	—	▶	—
	Rear Console Box	Poly Vinyl Chloride	▶	—	▶
		Poly Vinyl Chloride and with Sliding Armrest	—	▶*2	—
		Leather	—	—	OP
		Leather and with Sliding Armrest	—	▶*3	—
	Rear Sunshade (Manual)		—	▶	—
Body Electrical	Headlight	Halogen	▶	▶	▶
	Fog Light	Front	—	▶	▶
	Automatic Light Control System		▶	▶	▶
	Light Turn-OFF System		▶	▶	▶
	Daytime Running Light System		▶	▶	▶

(Continued)

▶: Standard OP : Option — : None

Grade				LE	XLE	SE
Body Electrical	High Mount Stop Light			▶	▶	▶
	Illuminated Entry System			▶	▶	▶
	Theft Deterrent System			—	▶	OP
	Engine Immobilizer			▶	▶	▶
	Cruise Control System			▶	▶	▶
	Heater Control Panel for Manual Air Conditioning System			▶	—	▶
	Heater Control Panel for Automatic Air Conditioning System			—	▶	—
	Air Conditioning System	Manual		▶	—	▶
		Right/Left Independent Temperature Control Automatic		—	▶	—
	Plasmacluster™ Generator			—	▶	—
	Seat Heater System			—	OP	OP
	Power Seat (Front Seat)	Driver's Seat		▶*4	▶	▶
		Passenger's Seat		—	▶	OP
	Wiper System	Washer-linked Wiper Function		▶	▶	▶
	Power Window System	Driver's Door	One-touch Auto Down	▶	—	▶
			One-touch Auto Up-and-Down with Jam Protection	—	▶	—
	Power Door Lock Control System			▶	▶	▶
	Luggage Door Opener			▶	▶	▶
	Smart Key System			—	OP*5	—
	Wireless Door Lock Control System			▶*6	▶	▶
	SRS Airbag System	Driver and Front Passenger Airbag		▶	▶	▶
		Knee (for Driver) Airbag		▶	▶	▶
		Side and Curtain Shield Airbag		▶	▶	▶
	Front Passenger Occupant Classification System			▶	▶	▶
	Outside Rear View Mirror	Electric Remote Control		▶	—	▶
		Electric Remote Control and Heater		OP	▶	OP
	Inside Rear View Mirror	Normal		▶	—	▶
		Compass Display Automatic Glare-resistance EC Mirror		OP	▶	OP
	Sliding Roof			OP	▶	OP
	Audio	AM/FM Tuner, CD Player and 6 Speakers		▶	—	▶
		AM/FM Tuner, In-dash 6-CD Changer, Bluetooth®, JBL Amplifier and 8 Speakers		OP	▶	OP
		7.0 in. Display, AM/FM Tuner, In-dash 4-CD Changer, Bluetooth®, JBL Amplifier and 8 Speakers		—	OP	OP
	Navigation with AV System			—	OP	OP
	Multi-information Display			—	▶	—
	Clock			▶	▶	▶
	Garage Door Opener			OP	▶	OP

*1: Except for Canadian Package Models and Mexican Package models
*2: Only for 2AZ-FE engine models
*3: Only for 2GR-FE engine models
*4: Regular seats can be selected as an option.
*5: Except for 2AZ-FE engine models and Mexican Package models
*6: Not available on grade package option D models and can be removed as an option on 2AZ-FE engine models for US Dependencies, Canada and Mexico.

ENGINE

2AZ-FE ENGINE

▪ DESCRIPTION

In-line 4-cylinder, 2.4-liter, 16-valve DOHC 2AZ-FE engine is used on the ’07 Camry. This engine uses the VVT-i (Variable Valve Timing-intelligent) system, DIS (Direct Ignition System), ETCS-i (Electronic Throttle Control System-intelligent).
These control functions achieve improved engine performance, fuel economy, and reduced exhaust emissions.

A special intake and exhaust system is used on the California specification 2AZ-FE engine models in order to comply with PZEV (Partial Zero Emission Vehicle) regulations.

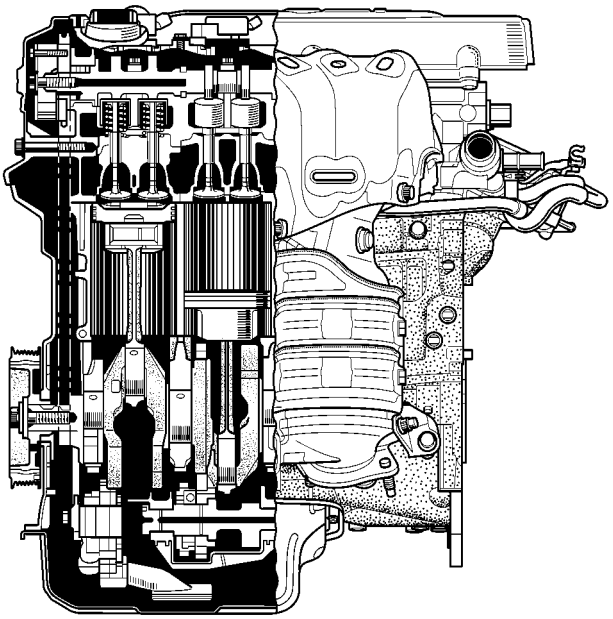

025EG01TE

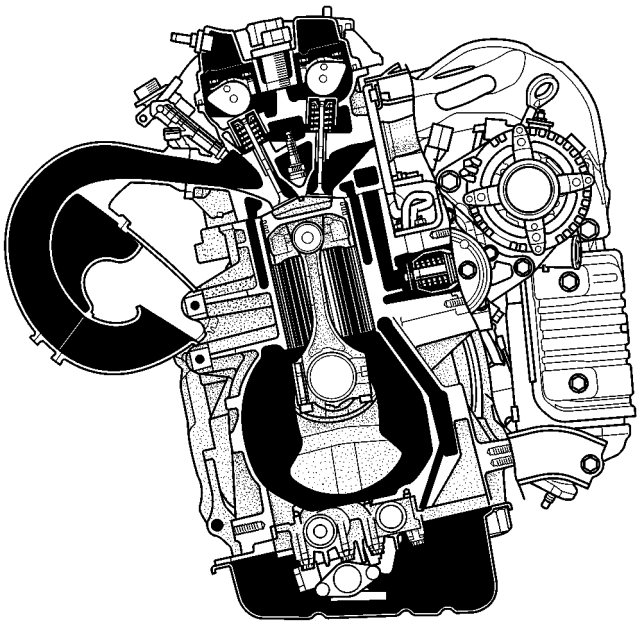

025EG02TE

▶ Engine Specifications ●

Model			California Package	Except California Package
No. of Cyls. & Arrangement			4-Cylinder, In-line	Δ
Valve Mechanism			16-Valve DOHC, Chain Drive (with VVT-i)	Δ
Combustion Chamber			Pentroof Type	Δ
Manifolds			Cross-Flow	Δ
Fuel System			SFI	Δ
Ignition System			DIS	Δ
Displacement cm^3 (cu. in.)			2362 (144.2)	Δ
Bore x Stroke mm (in.)			88.5 x 96.0 (3.48 x 3.78)	Δ
Compression Ratio			9.8 : 1	Δ
Max. Output (SAE-NET)*1			116 kW @ 6000 rpm (155 HP @ 6000 rpm)	118 kW @ 6000 rpm (158 HP @ 6000 rpm)
Max. Torque (SAE-NET)*1			214 N·m @ 4000 rpm (158 ft·lbf @ 4000 rpm)	218 N·m @ 4000 rpm (161 ft·lbf @ 4000 rpm)
Valve Timing	Intake	Open	3 ~ 43 BTDC	Δ
		Close	65 ~ 25 ABDC	Δ
	Exhaust	Open	45 BBDC	Δ
		Close	3 BTDC	Δ
Firing Order			1 - 3 - 4 - 2	Δ
Oil Grade			ILSAC	Δ
Octane Rating			87 or more	Δ
Emission Regulation			PZEV (CARB*3)	Tier2 (EPA*4)
		Tailpipe	LEVII-SULEV, SFTP	Tier2-Bin5, SFTP
		Evaporative	LEVII-Zero Evapo, ORVR	Tire2, ORVR
Engine Service Mass*2 (Reference) kg (lb)			130 (287)	Δ

*1: Maximum output and torque rating is determined by revised SAE J1394 standard.
*2: Weight shows the figure with the oil and engine coolant fully filled.
*3: CARB (California Air Resources Board)
*4: EPA (Environmental Protection Agency)

▶ Valve Timing ●

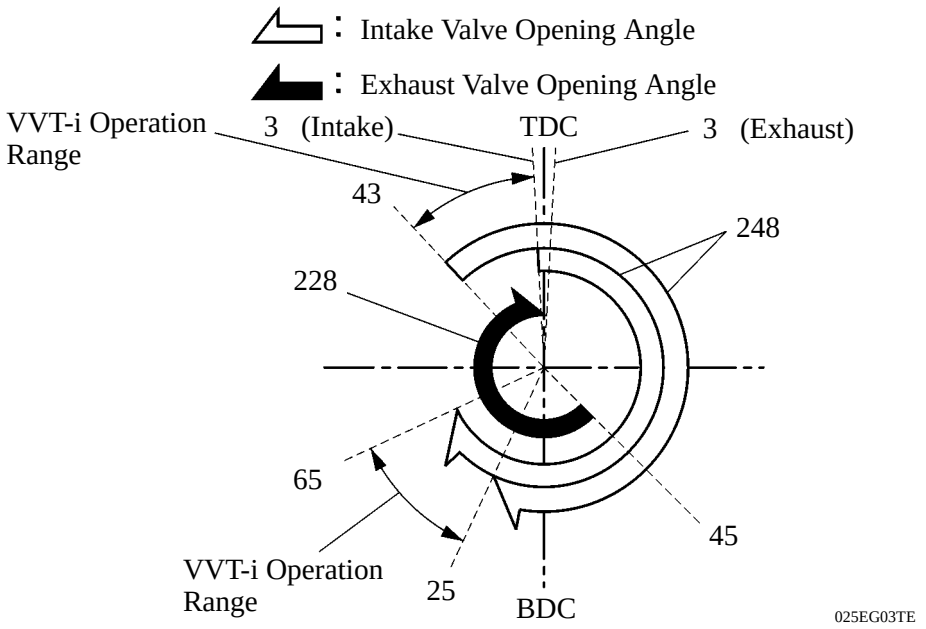

▶FEATURES OF 2AZ-FE ENGINE

The 2AZ-FE engine has achieved the following performance through the use of the items listed below.

(1) High performance and reliability

(2) Low noise and vibration

(3) Lightweight and compact design

(4) Good serviceability

(5) Clean emission and fuel economy

Item		(1)	(2)	(3)	(4)	(5)
Engine Proper	A head cover made of magnesium is used.			●		
	A taper squish shape is used for the piston head.	●				●
	A cylinder block made of aluminum alloy is used.			●		
	A resin gear balance shaft is used.		●	●		
Valve Mechanism	The VVT-i (Variable Valve Timing-intelligent) system is used.	●				●
	A timing chain and chain tensioner are used.		●	●	●	
Cooling System	The engine coolant is used the TOYOTA Genuine SLLC (Super Long Life Coolant).				●	
Intake and Exhaust System	The intake manifold runner valve assembly is used in the intake manifold on the models for California package.					●
	The link-less type throttle body is used.			●	●	
	The intake manifold made of plastic is used.			●		
	The double wall structure compact exhaust manifold is used on the models for California package.					●
	A 2-way exhaust control system is used.	●	●			
	A ceramic type TWC (Three-Way Catalytic Converter) is used.					●
Fuel System	The fuel returnless system is used.			●	●	●
	12-hole type fuel injectors with high atomizing performance are used.	●				●
	Quick connectors are used to connect the fuel hose with the fuel pipe.				●	
Ignition System	The DIS (Direct Ignition System) makes ignition timing adjustment unnecessary.	●			●	●
	Iridium-tipped spark plugs are used.	●			●	
Charging System	A segment conductor type generator is used.	●		●		
	A generator pulley with a clutch is used.					●
Starting System	The PS (Planetary reduction-Segment conductor motor) type starter is used.			●		
Serpentine Belt Drive System	A serpentine belt drive system is used.			●	●	
Engine Control System	The ETCS-i (Electronic Throttle Control System-intelligent) is used.	●				●
	Evaporative emission control system is used.					●

▪ ENGINE PROPER

1. Cylinder Head Cover

A lightweight magnesium alloy diecast cylinder head cover used.

The cylinder head cover gasket and the spark plug gasket have been integrated to reduce the number of parts.

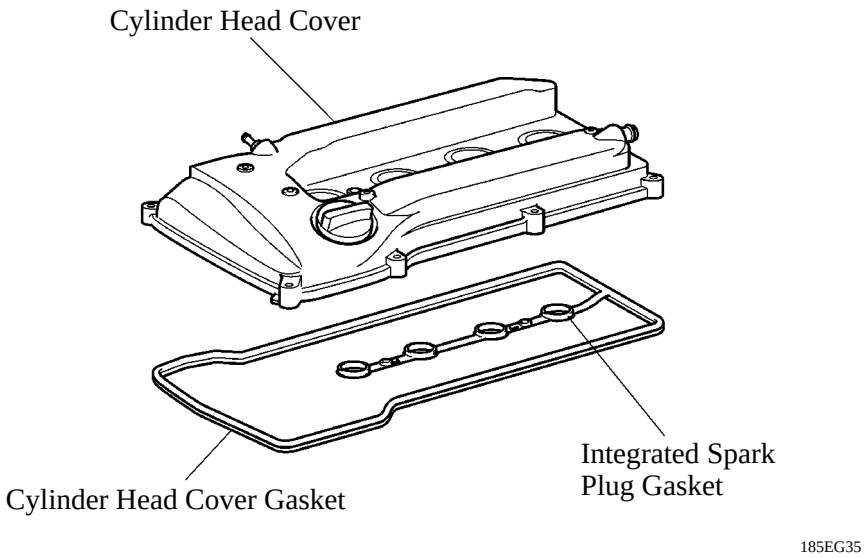

2. Cylinder Head Gasket

A steel-laminate type cylinder head gasket is used. A shim has been added around the cylinder bore to increase the sealing surface, thus improving the sealing performance and durability.

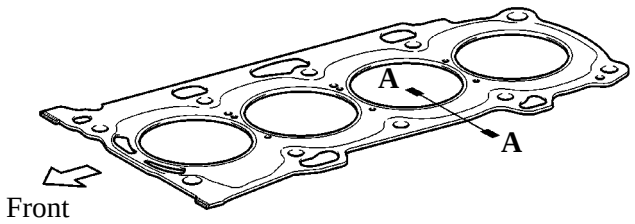

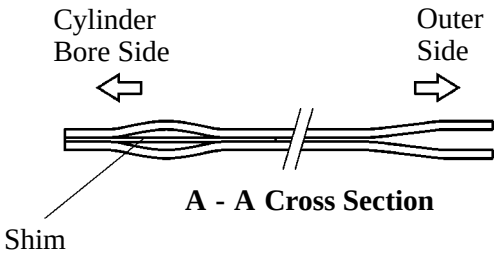

3. Cylinder Head

The taper squish combustion chamber is used to realize the engine's knocking resistance and fuel efficiency.

An upright intake port has been used to achieve a highly efficient intake.

Installing the injectors in the cylinder head enables the injectors to inject fuel as close as possible to the combustion chamber. This prevents the fuel from adhering to the intake port walls, which reduces HC exhaust emissions.

The routing of the water bypass jacket in the cylinder head has been optimized for improved cooling performance. In addition, a water bypass passage has been provided below the exhaust ports to reduce the number of parts and to achieve weight reduction.

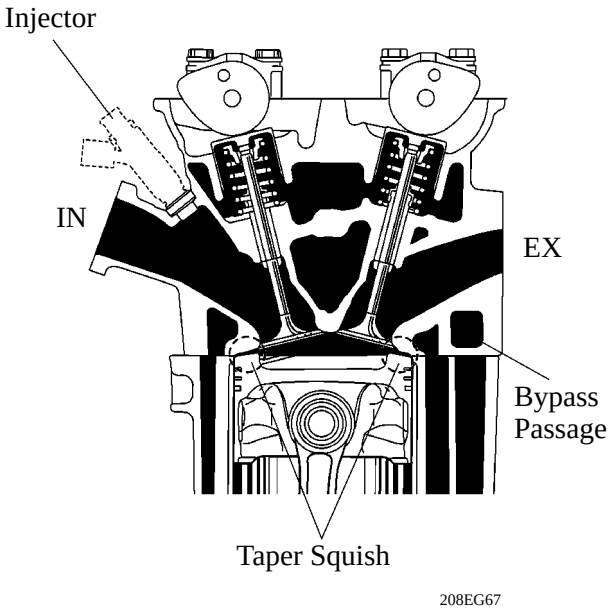

A - A Cross Section

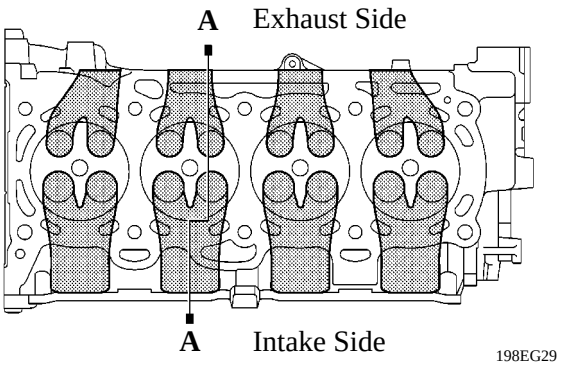

View from the Back Side

4. Cylinder Block

Lightweight aluminum alloy is used for the cylinder block.

By producing the thin cast-iron liners and cylinder block as a unit, compaction is realized.

Air passage holes are provided in the crankshaft bearing area of the cylinder block. As a result, the air at the bottom of the cylinder flows smoother, and pumping loss (back pressure at the bottom of the piston generated by the piston's reciprocal movement) is reduced to improve the engine's output.

The oil filter and the air conditioning compressor brackets are integrated into the crankcase. Also, the water pump swirl chamber and thermostat housing are integrated into the cylinder block.

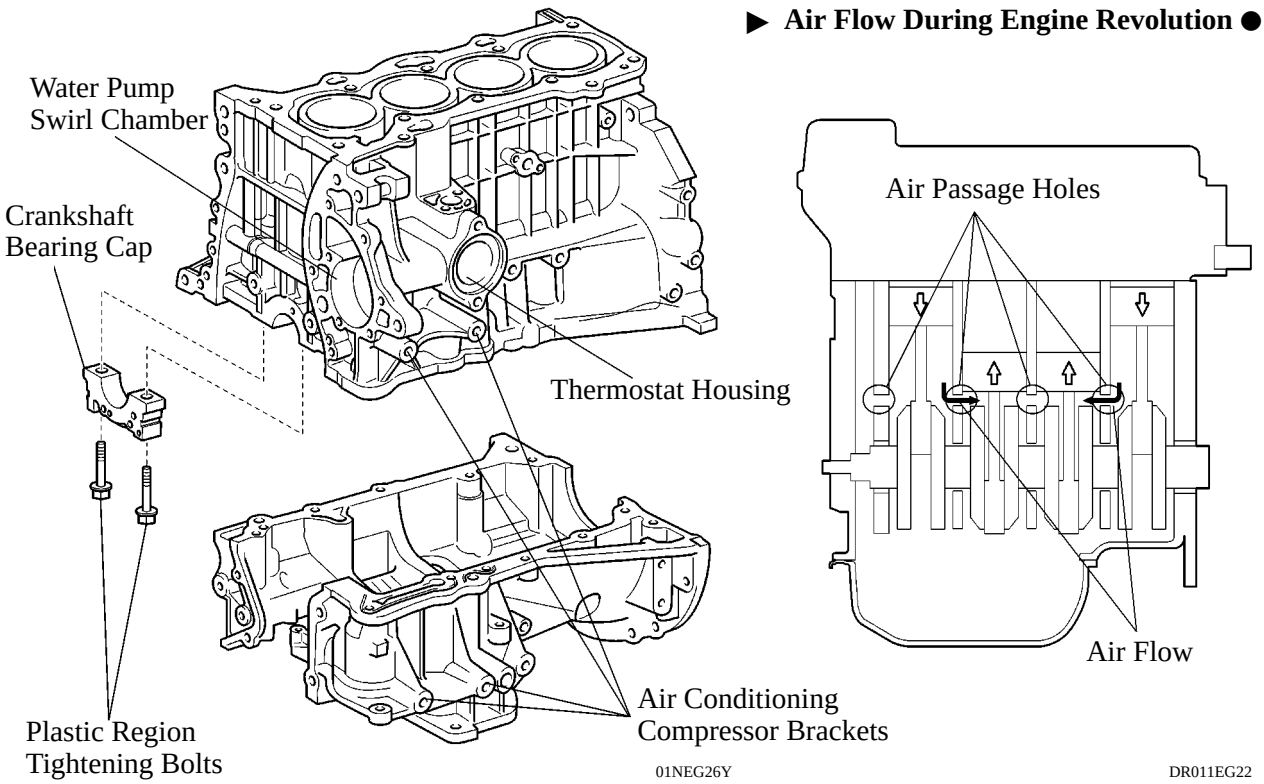

NOTICE

Never attempt to machine the cylinder because it has a thin liner thickness.

The liners are the spiny-type which have been manufactured so that their casting exteriors form large irregular surfaces in order to enhance the adhesion between the liners and the aluminum cylinder block. The enhanced adhesion helps heat dissipation, resulting in a lower overall temperature and heat deformation of the cylinder bores.

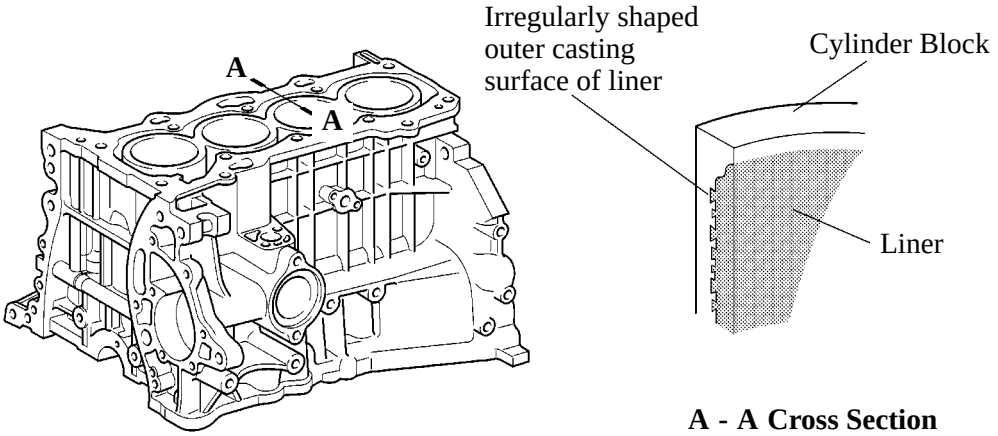

A - A Cross Section

01NEG27Y

Water jacket spacers are provided in the water jacket of the cylinder block.
They suppress the water flow in the center of the water jackets, guide the coolant above and below the cylinder bores, and ensure uniform temperature distribution. As a result, the viscosity of the engine oil that acts as a lubricant between the bore walls and the pistons can be lowered, thus reducing friction.

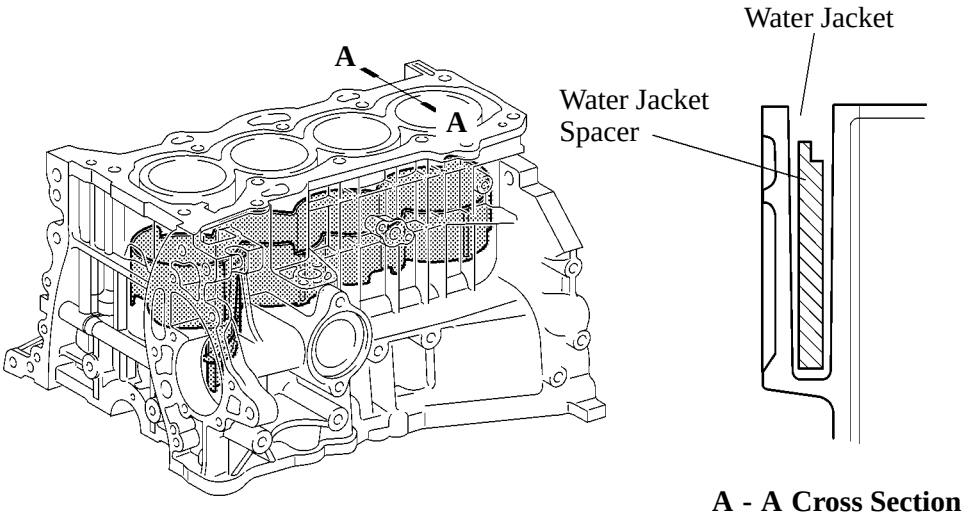

A - A Cross Section

01NEG28Y

5. Piston

The piston is made of aluminum alloy and skirt area is compact and lightweight.

The piston head portion id used a taper squish shape.

The piston skirt has been coated with resin.

Full floating type piston pins are used.

By increasing the machining precision of the cylinder bore diameter, the outer diameter of the piston has been made into one type.

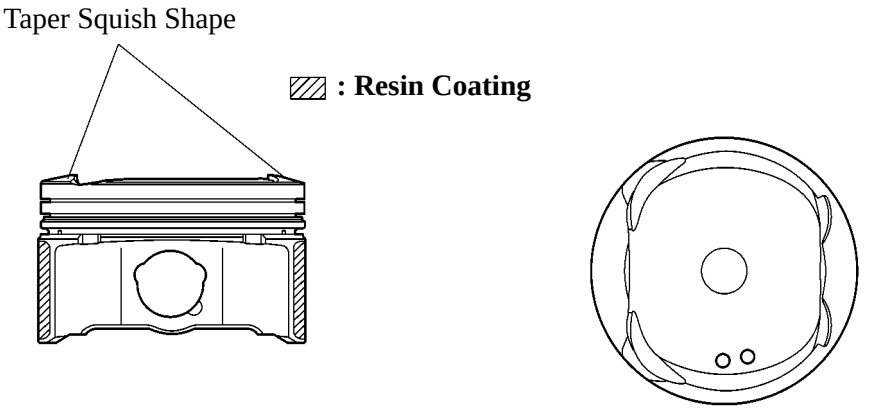

025EG26Y

6. Connecting Rod

The connecting rods and caps are made of high strength steel for weight reduction.

Nutless-type plastic region tightening bolts of the connecting rod are used for a lighter design.

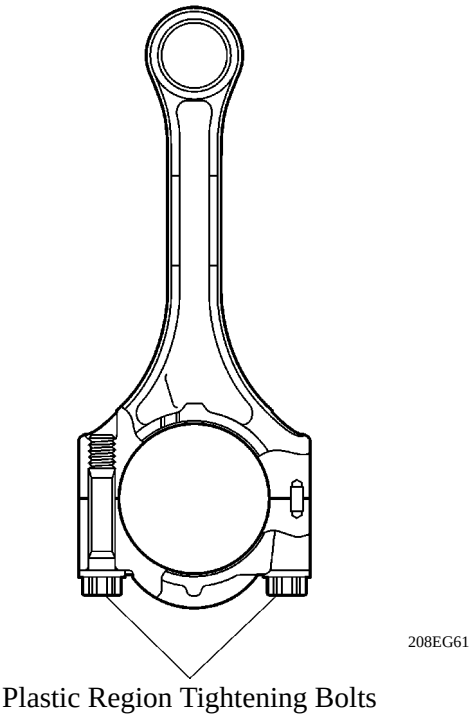

208EG61

7. Crankshaft

The crankshaft has 5 journals and 8 balance weights.

The precision and surface roughness of the pins and journals have been realized to reduce friction.

The balance shaft drive gear has been installed onto the crankshaft.

The crankshaft is made of forged steel.

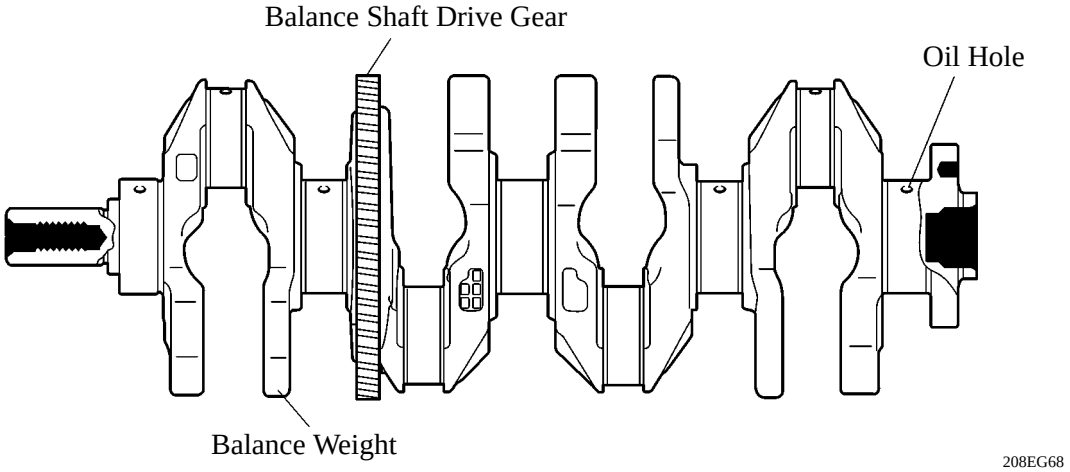

8. Balance Shaft

A balance shaft is used to reduce vibrations.

A direct-drive system is used which makes use of a gear that is installed onto the counterweight of crankshaft.

In addition, a resin gear is used on the driven side to suppress noise and offer lightweight design.

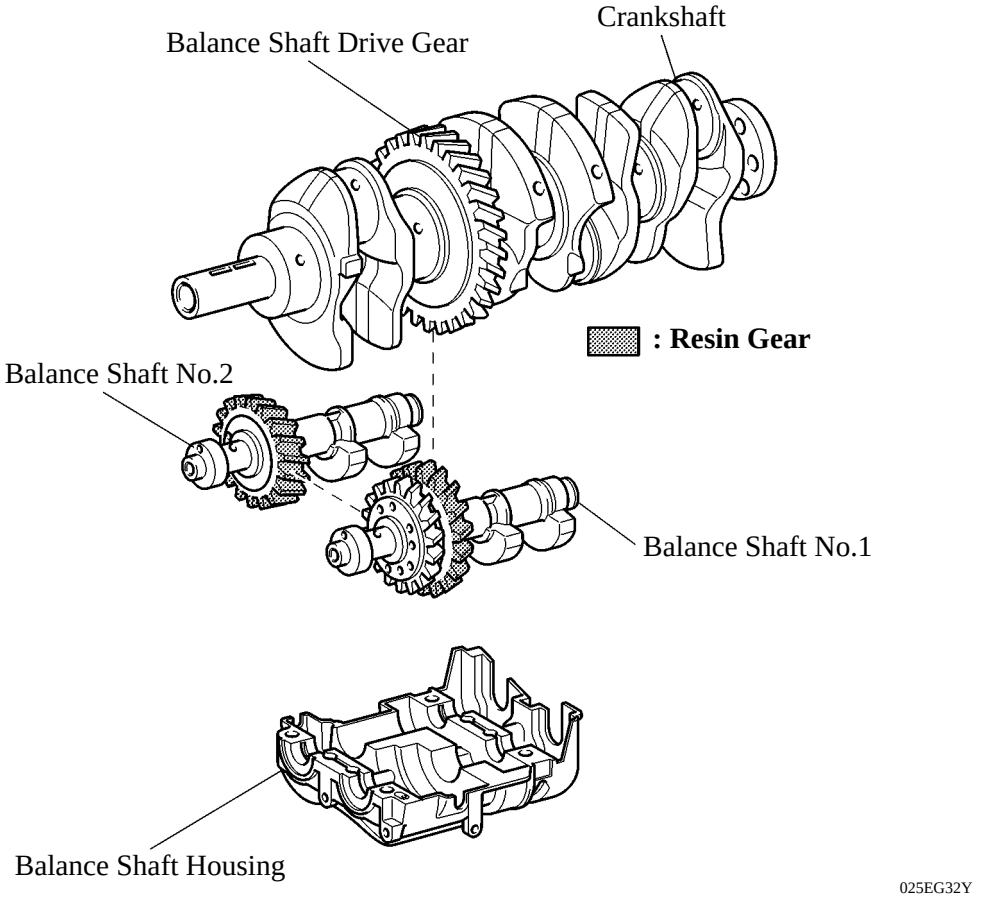

●VALVE MECHANISM

1. General

▶Each cylinder is equipped with 2 intake valves and 2 exhaust valves. Intake and exhaust efficiency has been increased due to the larger total port areas.

▶The valves are directly opened and closed by 2 camshafts.

▶The intake and exhaust camshafts are driven by a chain. The VVT-i system used for the intake camshaft is used to increase fuel economy, engine performance and reduce exhaust emissions.

▶The shimless type valve lifter is used.

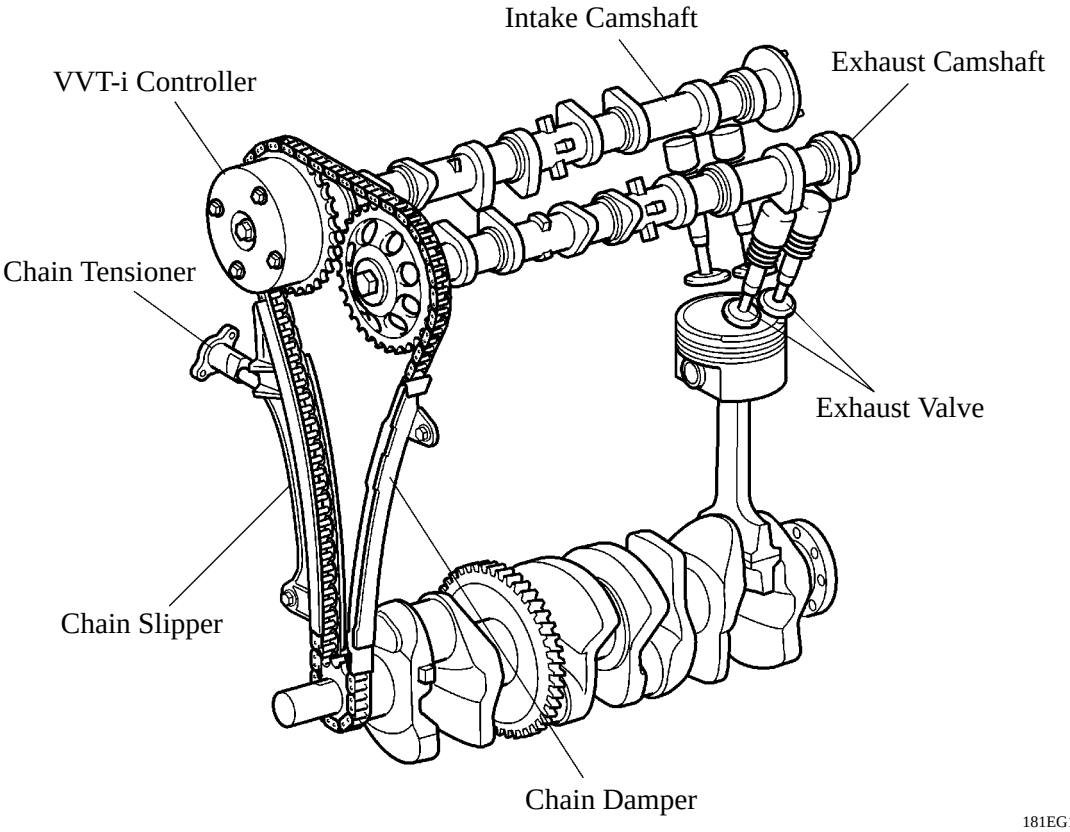

2. Camshaft

▶ The intake cam profile has been changed in conjunction with the change in valve timing. The new camshaft is adopted to realize excellent fuel economy, engine performance and reduce exhaust emissions.

▶ The intake camshaft is provided with timing rotor to trigger the camshaft position sensor.

▶ In conjunction with the adoption of the VVT-i system, an oil passage is provided in the intake camshaft in order to supply engine oil pressure to the VVT-i system.

▶ A VVT-i controller has been installed on the front of the intake camshaft to vary the timing of the intake valves.

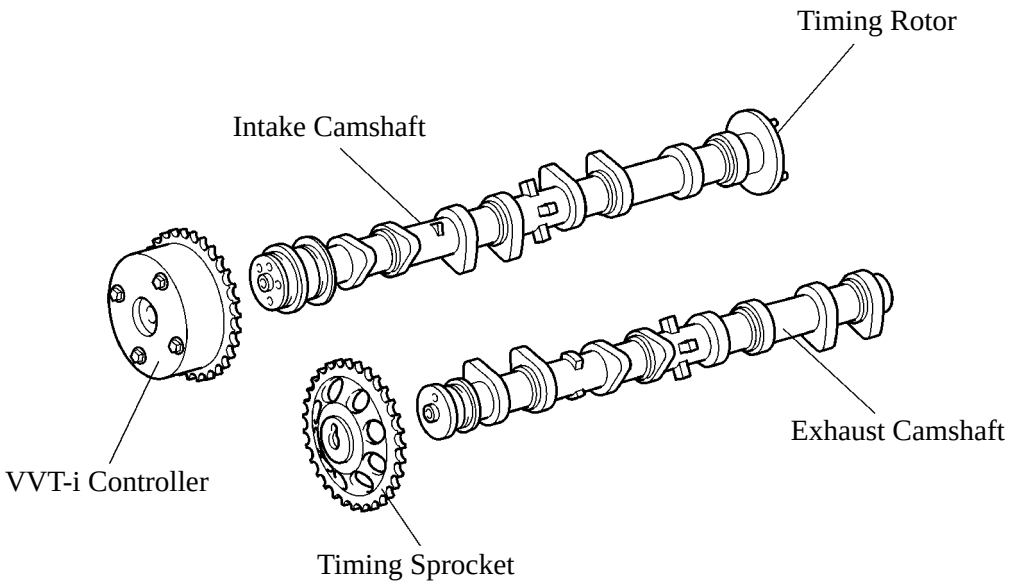

181EG11

3. Intake and Exhaust Valve

▶ Intake and exhaust valves with large-diameter valve face have been adopted to improve the intake air and exhaust gas flow.

▶ Narrow valve stems are used to reduce the intake and exhaust resistance and for weight reduction.

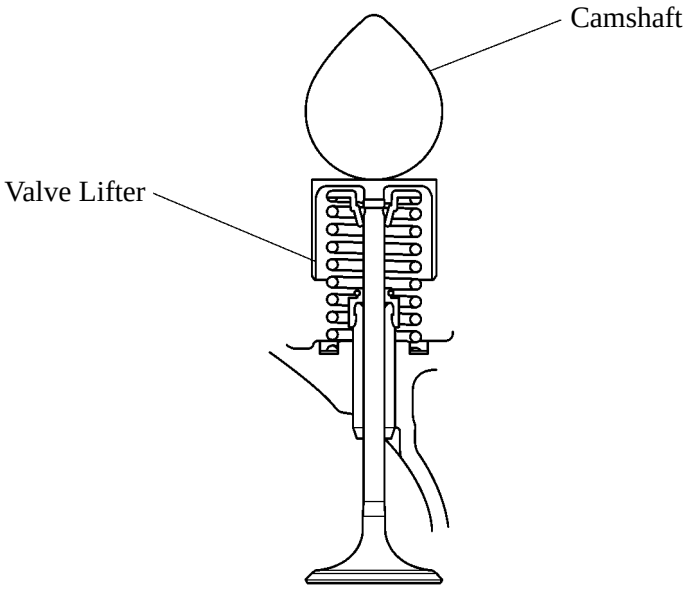

208EG69

▶ Along with the increased amount of valve lift, shimless valve lifters that provide a large cam contact surface are used. The adjustment of the valve clearance is accomplished by selecting and replacing the appropriate valve lifters.

Service Tip

The valve lifters are available in 35 size in increment of 0.020 mm (0.008 in.), from 5.060 mm (0.199 in.) to 5.740 mm (0.226 in.). For details, refer to the 2007 Camry Repair Manual (Pub. No. RM0250U).

4. Timing Chain

▶ A roller chain with an 8 mm pitch is used.

▶ The timing chain is lubricated by an oil jet.

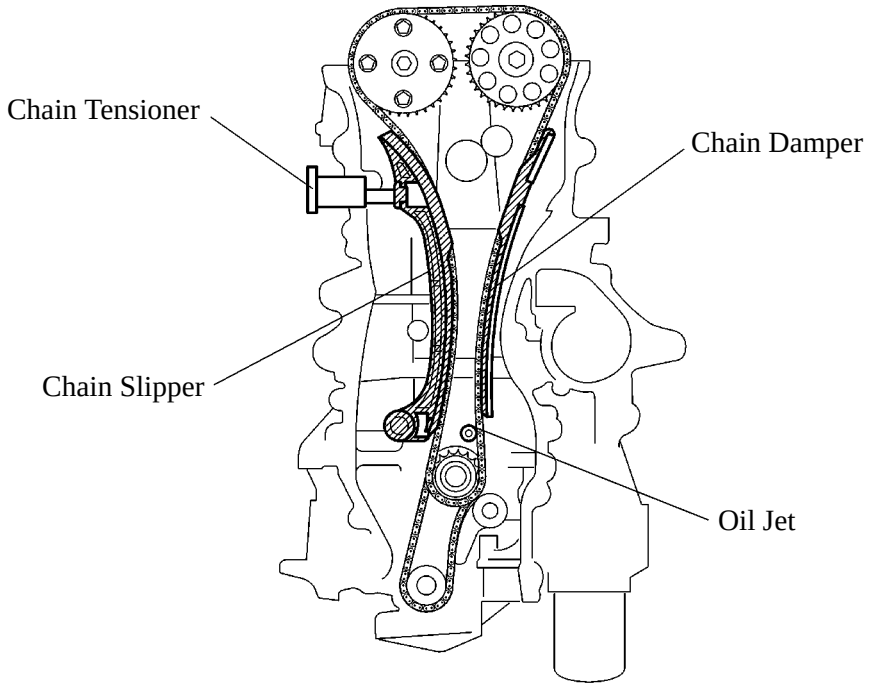

181EG13

5. Chain Tensioner

▶ The chain tensioner uses a spring and oil pressure to maintain proper chain tension at all times. The chain tensioner suppresses noise generated by the chain. A ratchet type non-return mechanism is also used.

▶ To improve serviceability, the chain tensioner is constructed so that it can be removed and installed from the outside of the timing chain cover.

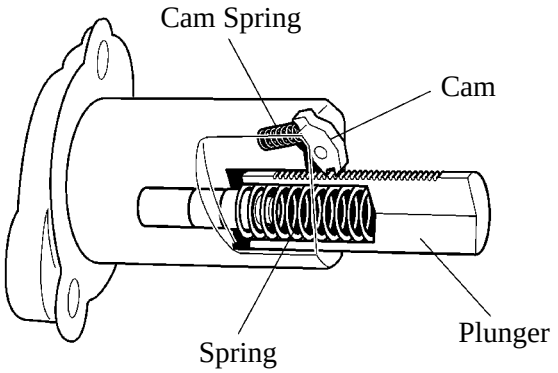

181EG14

▪ LUBRICATION SYSTEM

1. General

The lubrication circuit is fully pressurized and oil passes through an oil filter.

The trochoidal type oil pump is chain-driven by the crankshaft.

The oil filter is attached downward from the crankcase to improve serviceability.

Along with the adoption of the VVT-i system, the cylinder head is provided with a VVT-i controller and a camshaft timing oil control valve. This system operates using the engine oil.

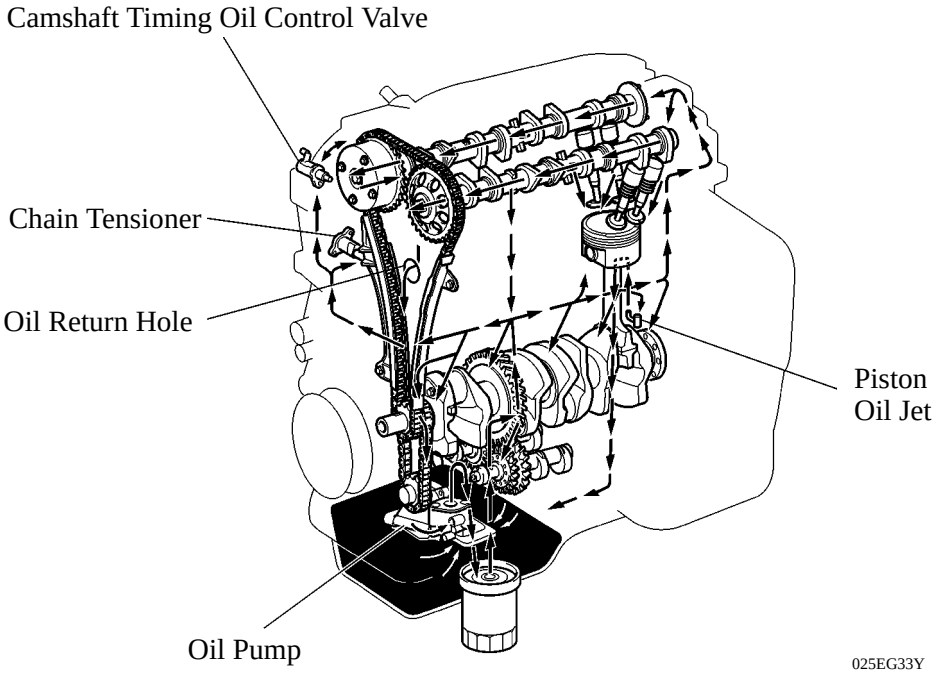

▶ **Oil Circuit ●**

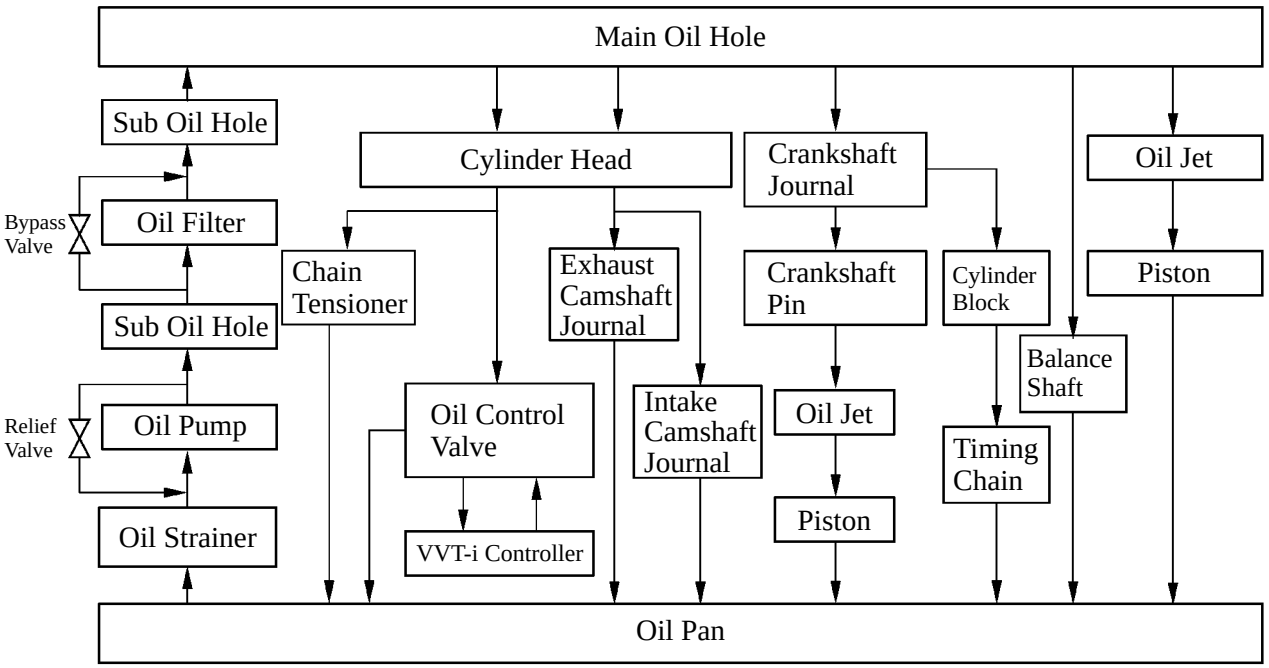

▶ **Specifications** ●

Oil Capacity	Dry	liters (US qts, Imp. qts)	5.0 (5.3, 4.4)
	with Oil Filter	liters (US qts, Imp. qts)	4.3 (4.5, 3.8)
	without Oil Filter	liters (US qts, Imp. qts)	4.1 (4.3, 3.6)

2. Oil Pump

The trochoidal type oil pump is chain-driven by the crankshaft, and fits compactly inside the oil pan. Friction has been reduced by means of 2 relief holes in the internal relief system.

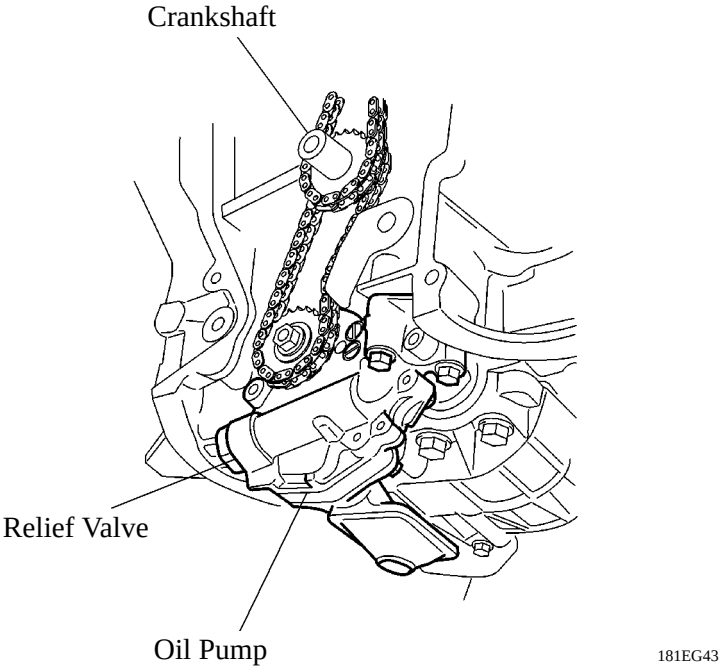

3. Piston Oil Jet

Piston oil jets for cooling and lubricating the pistons are used in the cylinder block.
These oil jets contain a check valve to prevent oil from being fed when the oil pressure is low. This prevents the overall oil pressure in the engine from dropping.

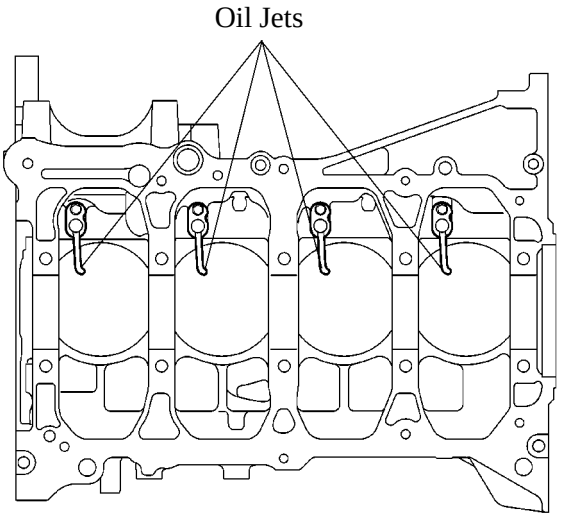

Bottom Side View

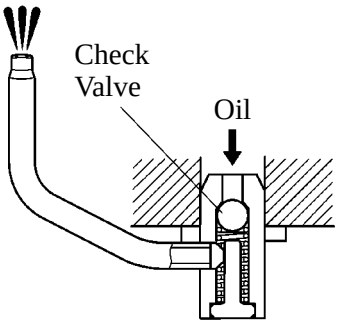

Oil Jet Cross Section

01NEG34Y

▪ COOLING SYSTEM

1. General

The cooling system uses a pressurized forced circulation system with open air type reservoir tank.

A thermostat with a bypass valve is located on the water inlet housing to maintain suitable temperature distribution in the cooling system.
This prevents sudden jumps in temperature while the engine is warming up.

The flow of the engine coolant makes a U-turn in the cylinder block to ensure a smooth flow of the engine coolant. In addition, a bypass passage is enclosed in the cylinder head and the cylinder block.

Warm water from the engine is sent to the throttle body to prevent freeze-up.

TOYOTA Genuine SLLC (Super Long Life Coolant) is used to extend the maintenance interval.

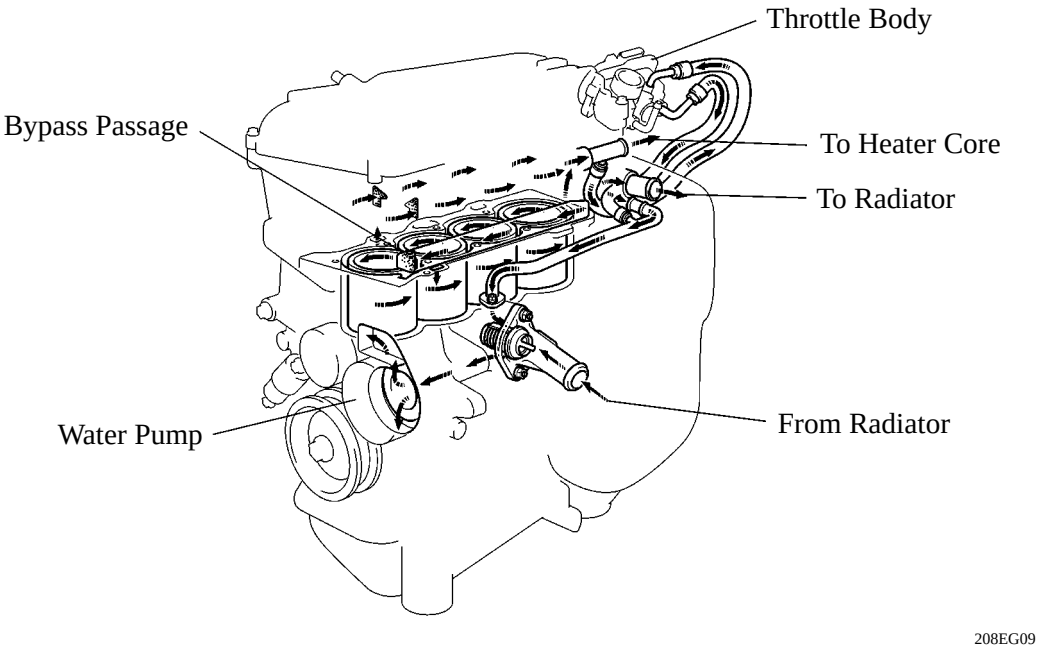

▶ Water Circuit ●

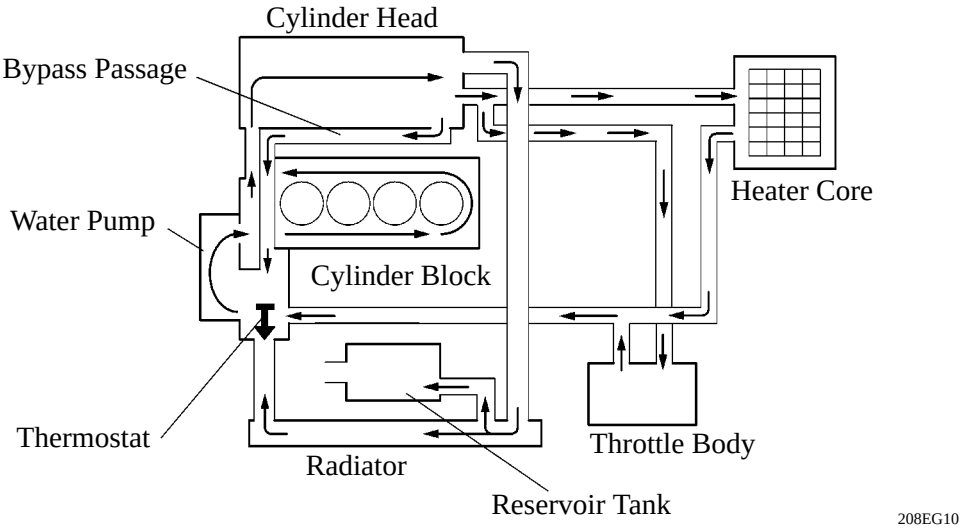

2. Engine Coolant

TOYOTA genuine SLLC (Super Long Life Coolant) is used. Maintenance interval is as shown in the table below:

Type		TOYOTA Genuine SLLC or the Following*
Maintenance Intervals	First Time	100,000 miles (160,000 km)
	Subsequent	Every 50,000 miles (80,000 km)
Color		Pink

*: Similar high quality ethylene glycol based non-silicate, non-amine, non-nitrite, and non-borate coolant with long-life hybrid organic acid technology. (Coolant with hybrid organic acid technology consists of the combination of low phosphates and organic acids.)

SLLC is pre-mixed (50 % coolant and 50 % deionized water for U.S.A. or 55 % coolant and 45 % deionized water for Canada), so no dilution is needed when adding or replacing SLLC in the vehicle.

You can also apply the new maintenance interval (every 50,000 miles/80,000 km) to vehicles initially filled with LLC (red-colored), if you use SLLC (pink-colored) for the engine coolant change.

●INTAKE AND EXHAUST SYSTEM

1. General

▶The link-less type throttle body is used and it realizes excellent throttle control.

▶The intake manifold is made of plastic to reduce the weight and the amount of heat transferred from the cylinder head.

▶The intake manifold runner valve assembly is used in the intake manifold on the models for California package.

▶The adoption of the ETCS-i (Electronic Throttle Control System-intelligent) has realized excellent throttle control, For details of throttle body, refer to page EG-49.

▶The double wall structure compact exhaust manifold is used on the models for California package.

▶2-way exhaust control system is provided to reduce noise and vibration in the main muffler.

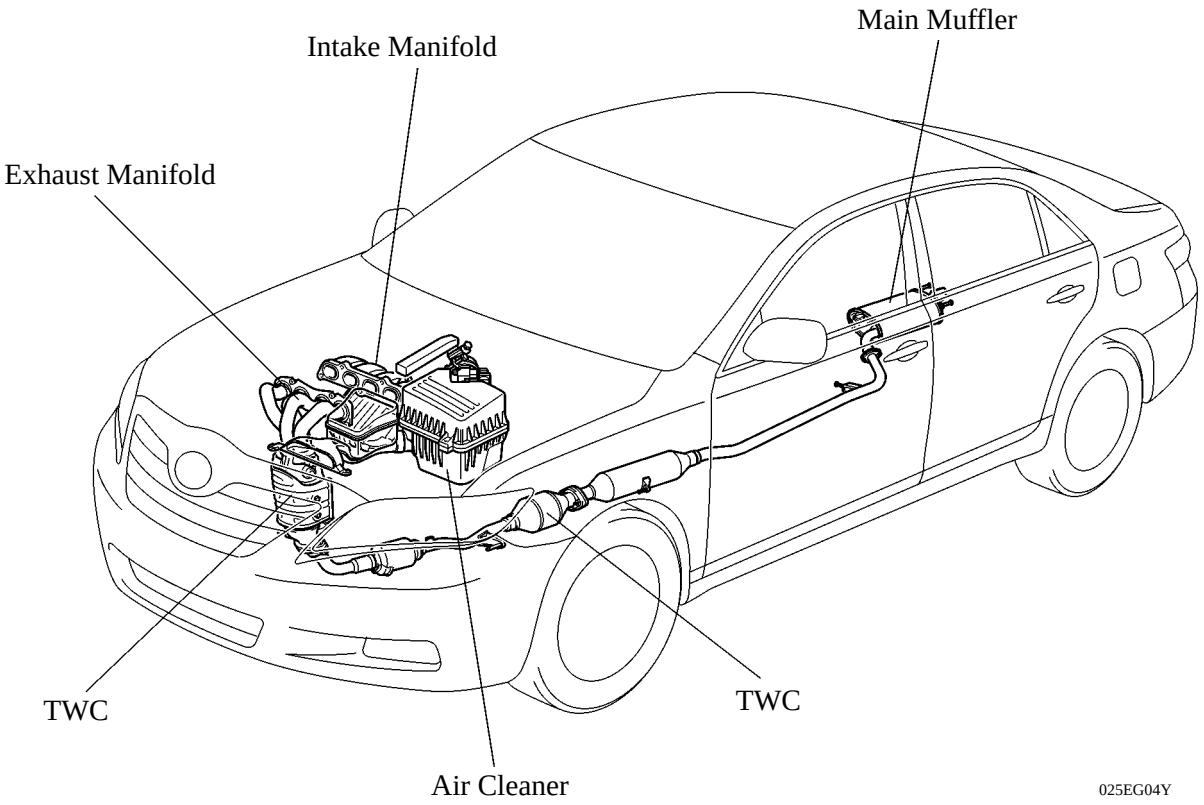

2. Air Cleaner

▶ A nonwoven, full-fabric type air cleaner element is used.

▶ A carbon filter, which adsorbs the HC that accumulates in the intake system when the engine is stopped, is used in the air cleaner case in order to reduce evaporative emissions. This filter is maintenance-free.

▶ Resonators have been provided to reduce the amount of intake air sound.

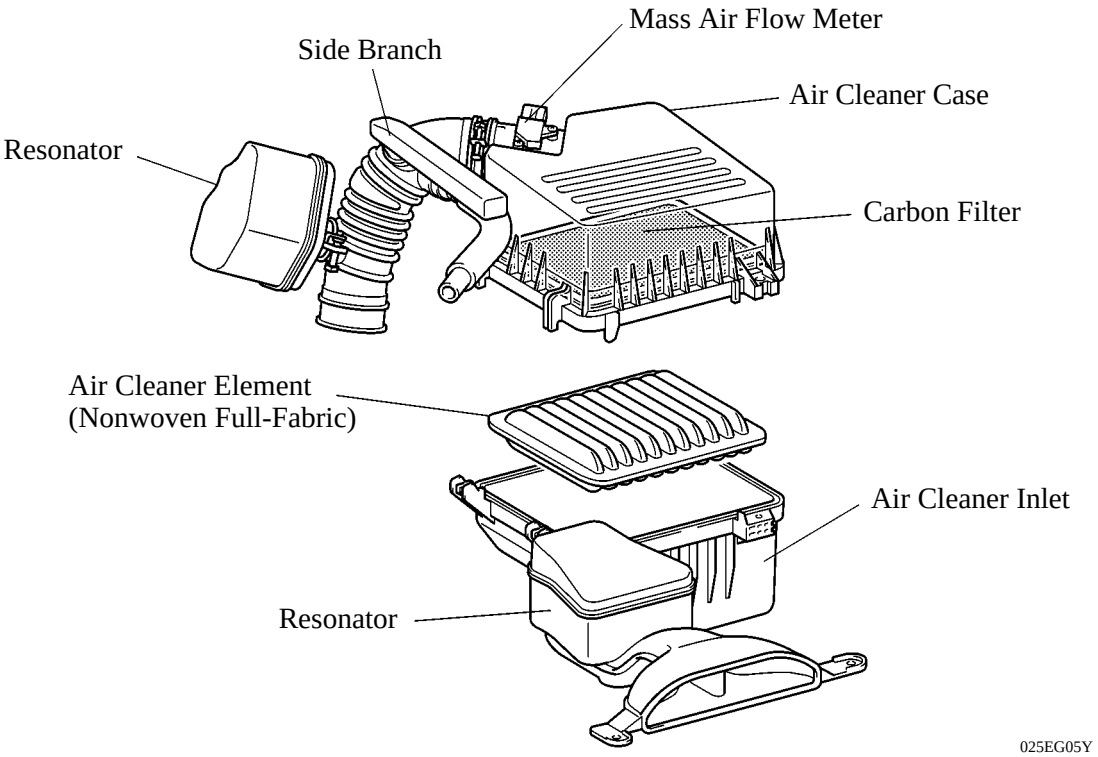

3. Throttle Body

▶ A link-less type throttle body in which the throttle position sensor and the throttle control motor are integrated is used. It realizes excellent throttle valve control. For details, see page EG-44.

▶ In the throttle control motor, a DC motor with excellent response and minimal power consumption is used. The ECM performs the duty ratio control of the direction and the amperage of the current that flows to the throttle control motor in order to regulate the throttle valve angle.

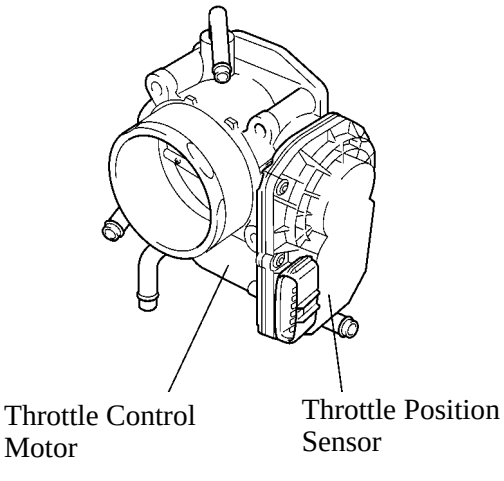

4. Intake Manifold

▶ The intake manifold is made of plastic to reduce the weight and the amount of heat transferred from the cylinder head. As a result, it has become possible to reduce the intake air temperature and improve the intake volumetric efficiency.

▶ A resonator is installed inside the air intake chamber which makes use of the intake pulse to improve torque in the mid-speed range.

▶ The intake manifold cover is used on the intake manifold to reduce intake air noise.

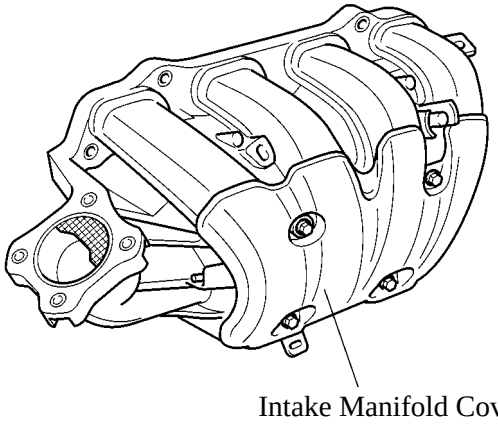

025EG27Y

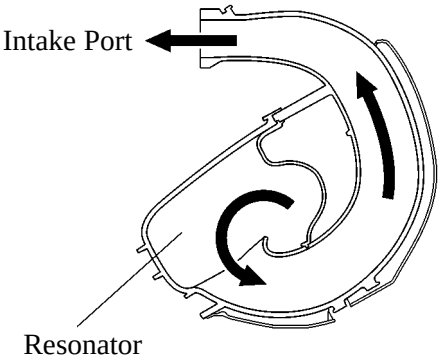

025EG28TE

5. Intake Manifold Runner Valve Assembly (California Package Model)

▶ The intake manifold runner valve assembly is used in the intake manifold on the models for California package.
This valve is actuated by the intake manifold runner valve control, which aims at improving the combustion efficiency while a cold engine is idling.

▶ The intake manifold runner valve assembly consists primarily of an intake manifold runner valve, valve body, and an intake manifold runner valve motor assembly.

For the details of the above description, refer to the Engine Control System section on page EG-55.

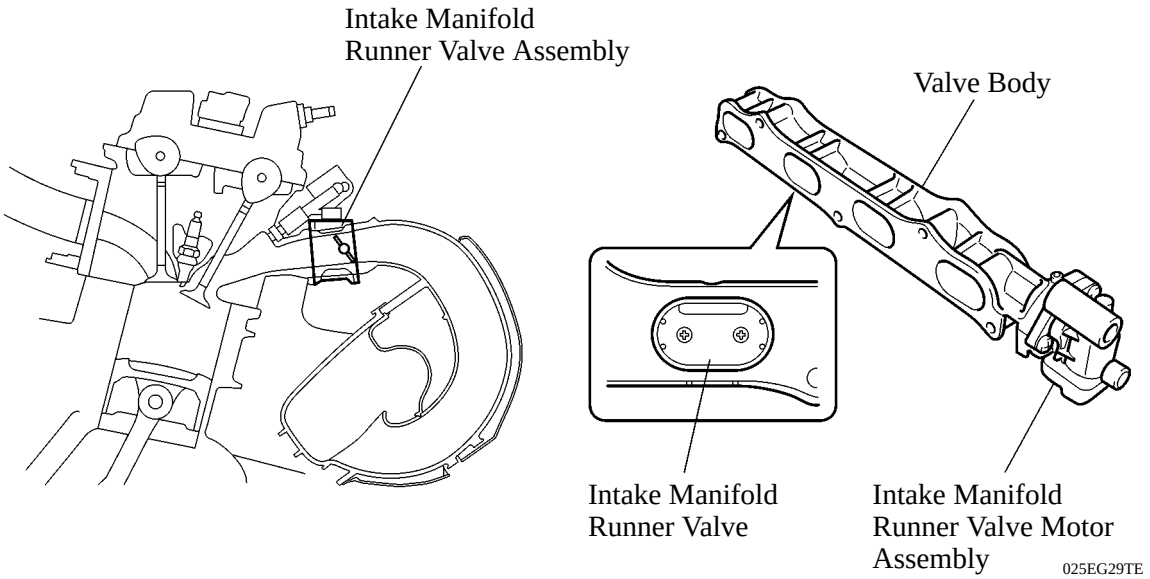

025EG29TE

6. Exhaust Manifold (California Package Model)

A compact exhaust manifold with a double-wall construction is used. This manifold has been shaped to prevent the temperature of the exhaust gas from dropping as it travels from the exhaust port to the TWC (Three-Way Catalytic converter). This promotes the activation of the TWC.
Furthermore, this manifold has been shaped so that the air-fuel ratio sensor can be mounted in the most effective position for detecting the exhaust gas.

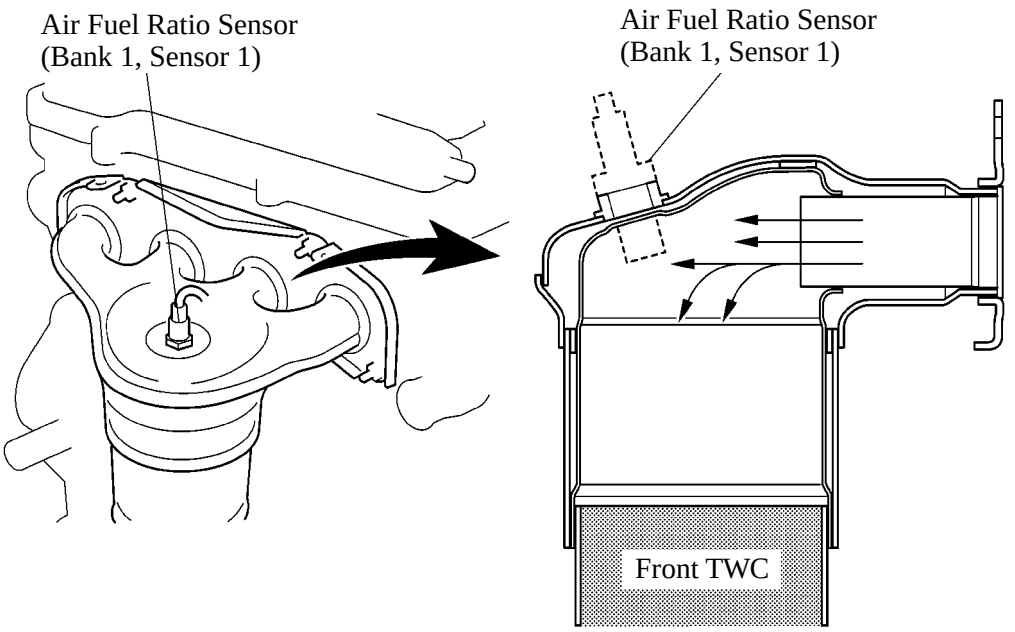

025EG35Y

7. Exhaust Manifold (Except California Package Model)

▶ A stainless steel exhaust manifold is used for improving the warm-up of TWC and for weight reduction.

▶ The air fuel ratio sensor is used to the exhaust manifold.

▶ A ceramic type TWC is used. This TWC improves exhaust emissions by optimizing the cell density.

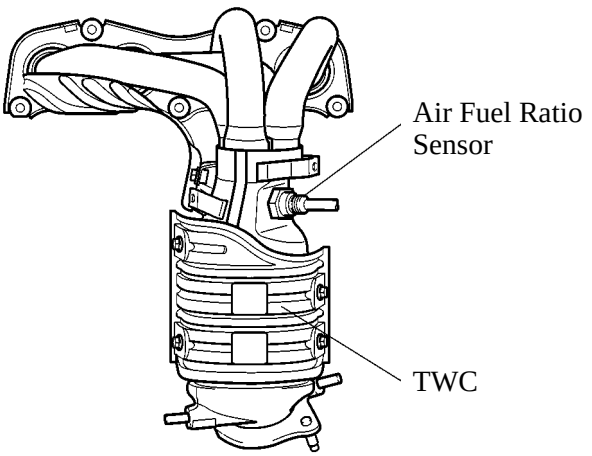

025EG06TE

8. Exhaust Pipe

General

▶ 2-way exhaust control system is provided to reduce noise and vibration in the main muffler.

▶ A long tail mechanism is used in the main muffler to aim at reducing exhaust noise while the engine is running in the low speed range.

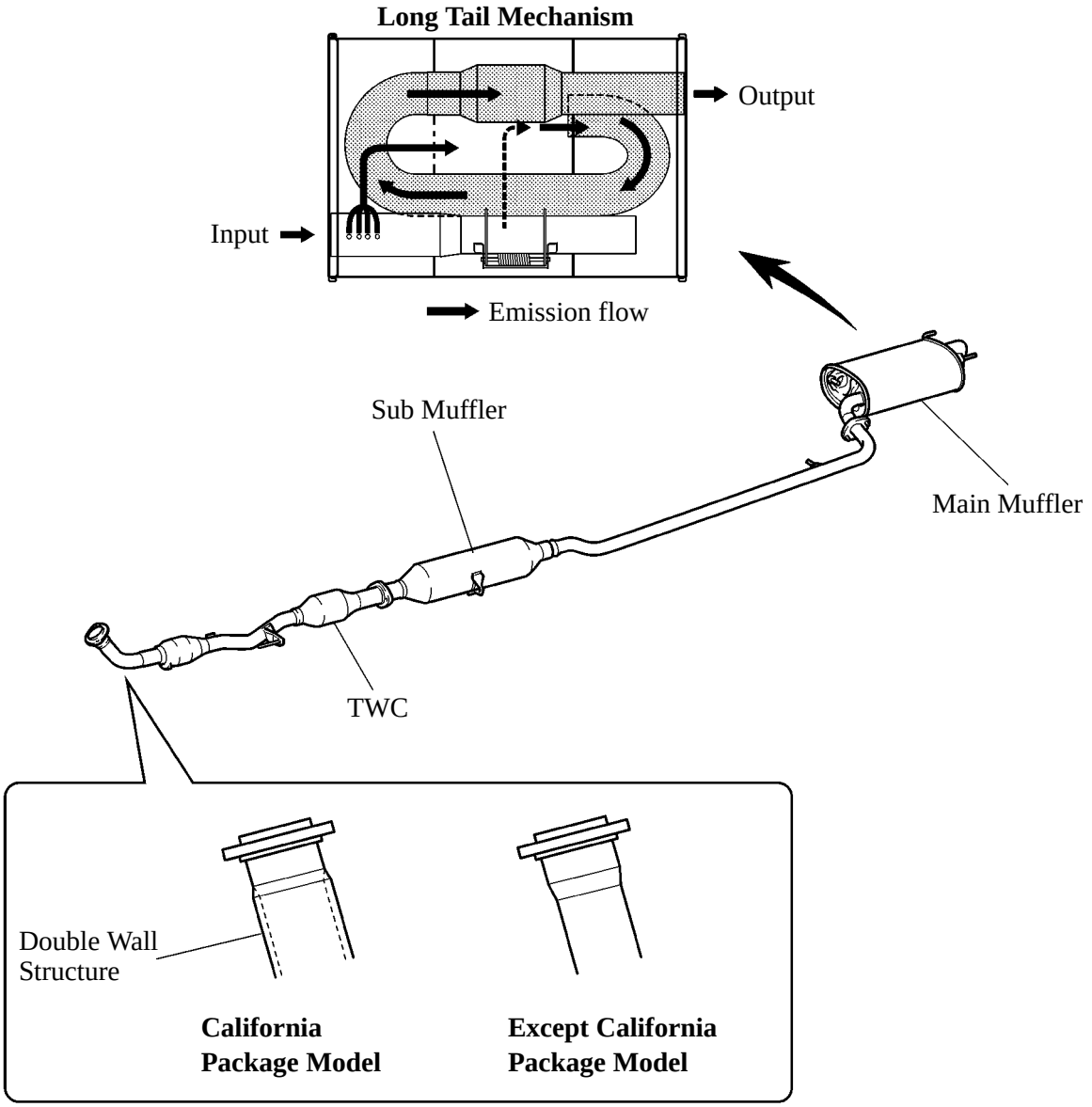

025EG07TE

2-Way Exhaust Control System

▶ A 2-way exhaust control system is used. This system reduces the back pressure by opening and closing a variable valve that is enclosed in the main muffler, thus varying the exhaust gas pressure.

▶ The valve opens steplessly in accordance with the operating condition of the engine, thus enabling a quieter operation at lower engine speeds, and reducing back pressure at higher engine speeds.

1) Construction

The control valve is enclosed in the main muffler. When the exhaust gas pressure overcomes the spring pressure, the control valve opens steplessly in accordance with the exhaust gas pressure.

2) Operation

a. When Control Valve is Closed (low engine speed)

Since the pressure in the main muffler is low, the control valve is closed. Hence exhaust gas does not pass the bypass passage, and exhaust noise is decreased in the main muffler.

b. When Control Valve is Open (middle to high engine speed)

The valve opens as the engine speed and the back pressure in the muffler increase. This allows a large volume of exhaust gas to pass the bypass passage, thereby substantially decreasing the back pressure.

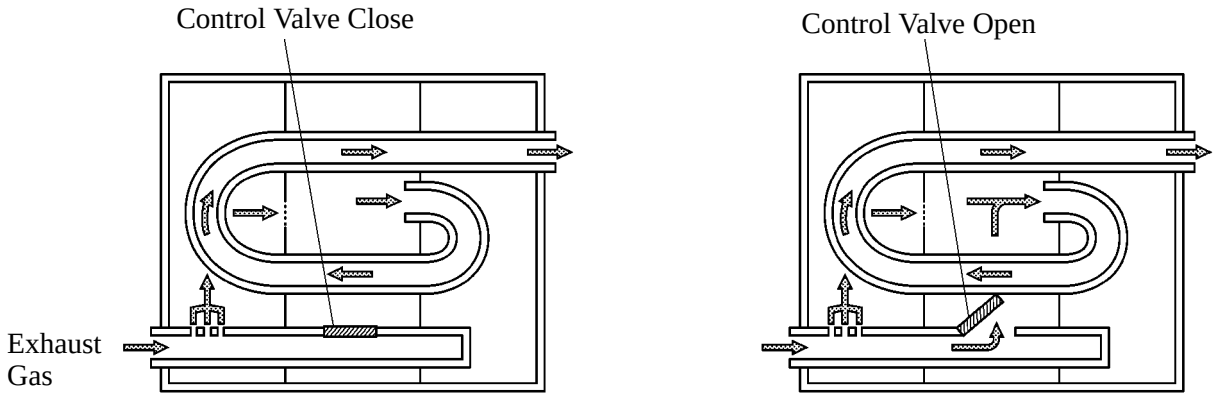

Low Engine Speed **Middle to High Engine Speed**

025EG30Y

●FUEL SYSTEM

1. General

▶A fuel returnless system is used to reduce evaporative emissions.

▶A fuel cut control is used to stop the fuel pump when the SRS airbag is deployed in a frontal or side collision. For details, see page EG-58.

▶A compact fuel pump in which a fuel filter, pressure regulator, and fuel sender gauge is integrated in the fuel pump assembly is used.

▶A quick connector is used to connect the fuel pipe with the fuel hose for excellent serviceability.

▶The aluminum die-cast delivery pipe has been integrated with the pulsation damper.

▶A compact 12-hole type injector is used to increase atomization of the fuel.

▶The ORVR (On-Board Refueling Vapor Recovery) system is used. For details, see page EG-65.

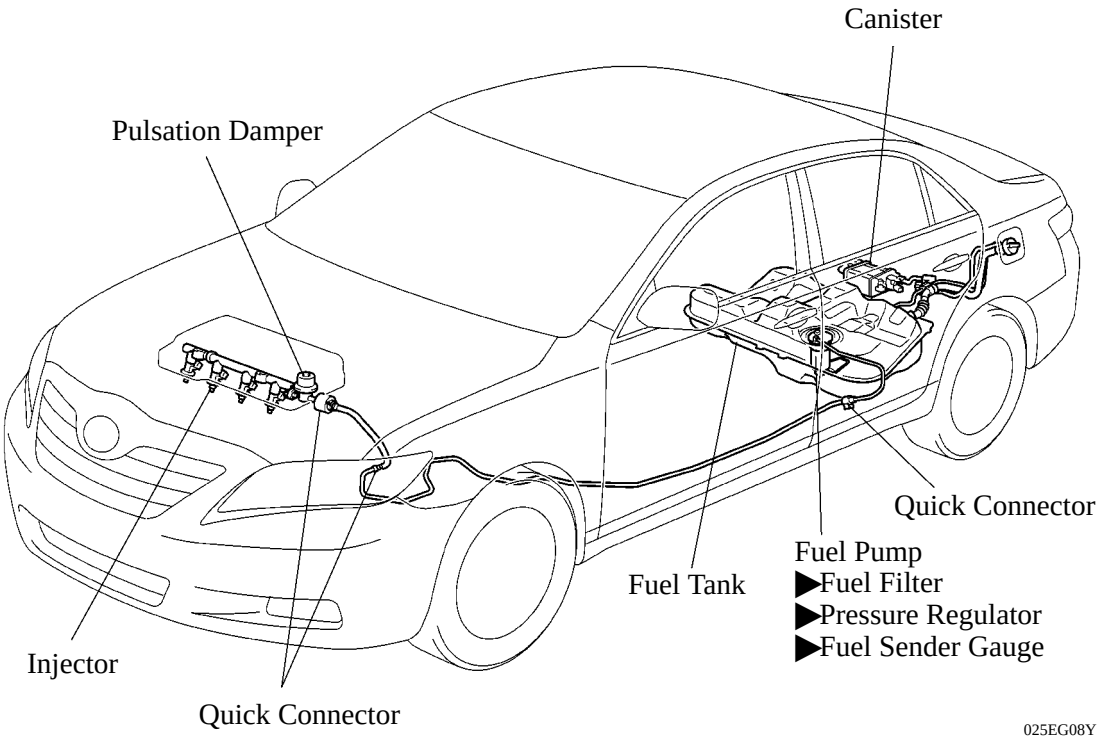

2. Fuel Returnless System

The fuel returnless system is used to reduce the evaporative emission. As shown below, integrating the fuel filter, pressure regulator, and fuel sender gauge with fuel pump assembly makes it possible to discontinue the return of fuel from the engine area and prevent temperature rise inside the fuel tank.

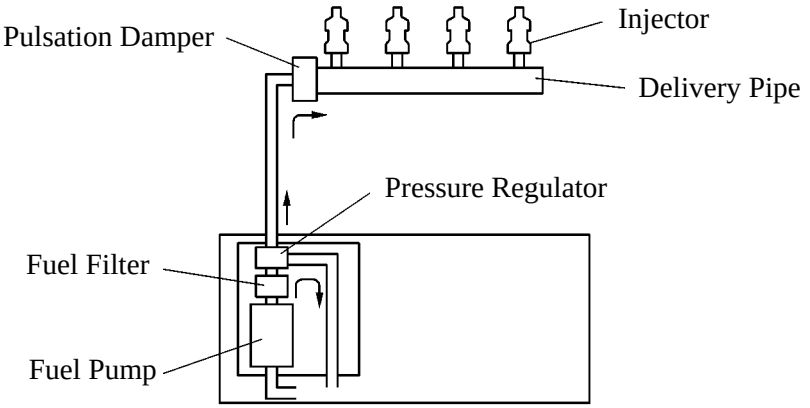

208EG18

3. Fuel Injector

The 12-hole type injector is used to improve the atomization of fuel.

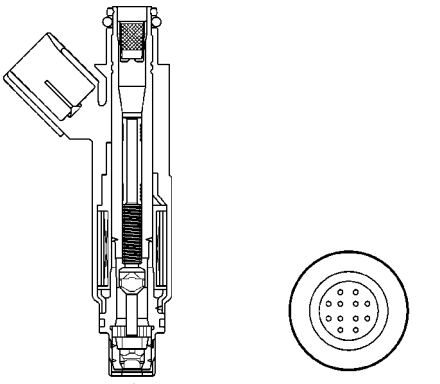

181EG41

IGNITION SYSTEM

1. General

A DIS (Direct Ignition System) is used. The DIS improves the ignition timing accuracy, reduces high-voltage loss, and enhances the overall reliability of the ignition system by eliminating the distributor. The DIS in this engine is an independent ignition system, which has one ignition coil (with igniter) for each cylinder.

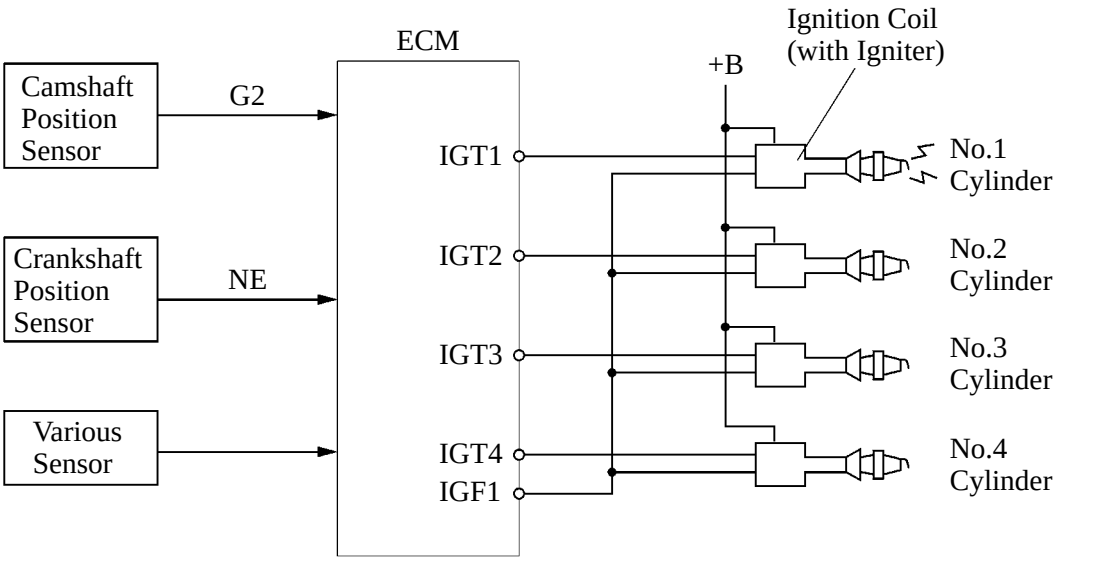

165EG25

2. Ignition Coil

The DIS provides 4 ignition coils, one for each cylinder. The spark plug caps, which provide contact to the spark plugs, are integrated with an ignition coil. Also, an igniter is enclosed to simplify the system.

3. Spark Plug

Iridium-tipped spark plugs are used to realize a 120,000 mile (192,000 km) maintenance-free operation. By making the center electrode of iridium, the same ignition performance as the platinum-tipped spark plug have been achieved and further improvement of durability has been realized.

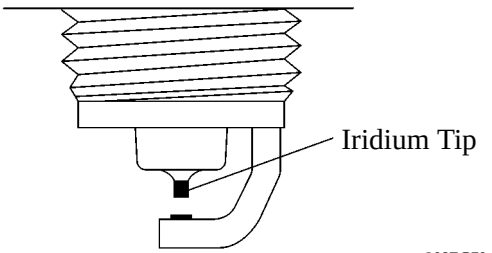

208EG70

▶ Specifications ●

DENSO	SK20R11
NGK	IFR6A11
Plug Gap	1.0 - 1.1 mm (0.0394 - 0.043 in.)

▪ CHARGING SYSTEM

1. General

Instead of the conventional type generator, a compact and lightweight segment conductor type generator is used. This type of generator generates a high amperage output in a highly efficient manner.

This generator uses a joined segment conductor system, in which multiple segment conductors are welded together to the stator. Compared to the conventional winding system, the electrical resistance is reduced due to the shape of the segment conductors, and their arrangement helps to make the generator more compact.

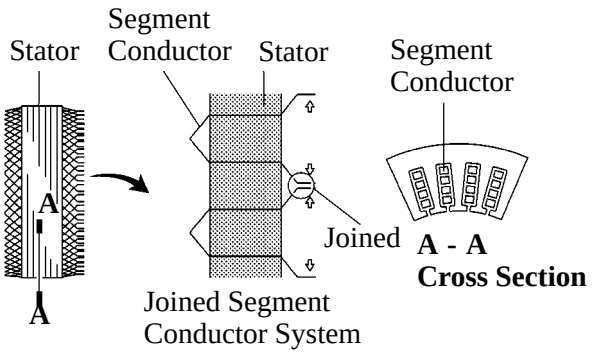

206EG40

Segment Conductor Type Generator

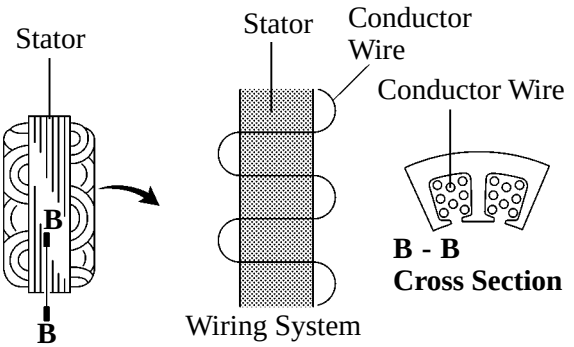

206EG41

Conventional Type Generator

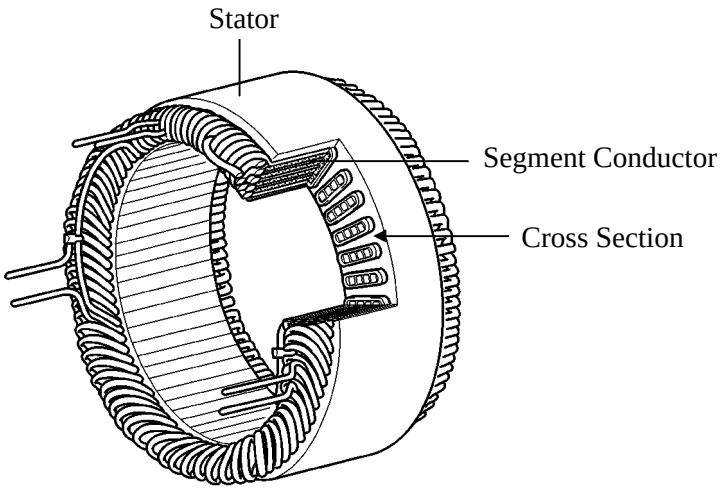

Stator of Segment Conductor Type Generator

206EG42

▶ **Specifications** ●

Type	SE0
Rated Voltage	12 V
Output Rated	100 A

▶ Wiring Diagram ●

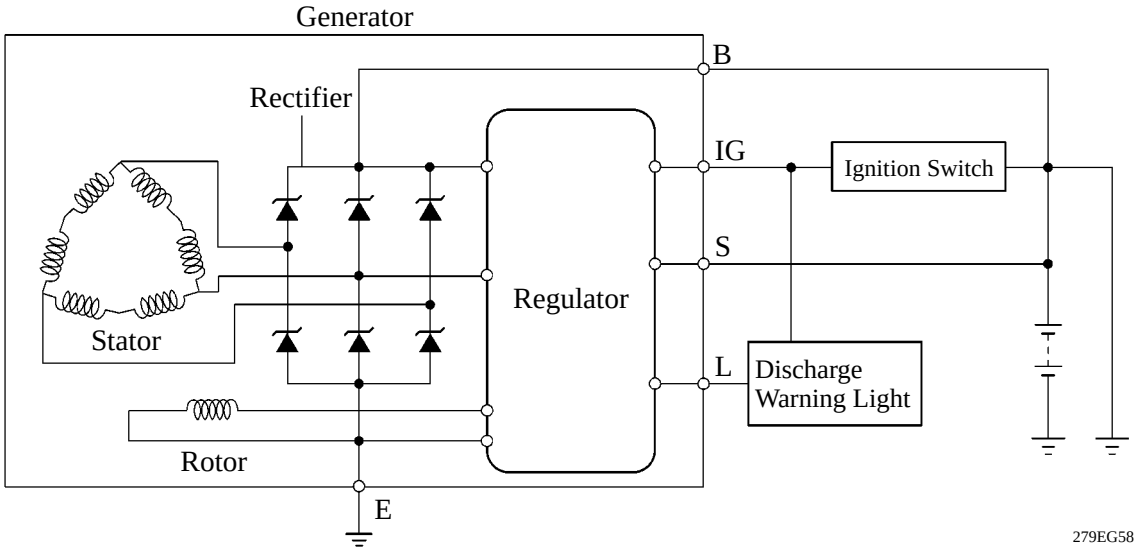

Service Tip

Although the charging circuit of a conventional generator is checked through the F terminal, this check cannot be performed on the Segment Conductor type generator through the use of the F terminal because the F terminal has been eliminated. For details, refer to the 2007 Camry Repair Manual (Pub. No. RM0250U).

2. Generator Pulley

A one-way clutch is set to the generator pulley. Operation of the one-way clutch cancels generator pulley inertia and helps to prevent slipping of the V-ribbed belt. This realizes a low tension V-ribbed belt that achieves reduced friction.

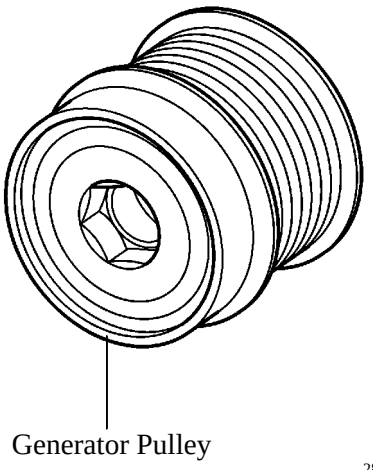

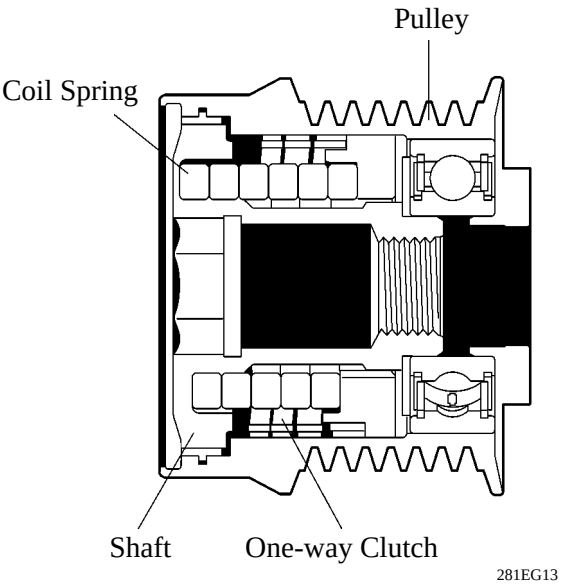

▪ STARTING SYSTEM

1. General

A compact and lightweight PS (Planetary reduction-Segment conductor motor) starter is used on all models.

The PS starter contains an armature that uses square-shaped conductors and its surface functions as a commutator, resulting in improved output torque and overall length reduction.

In place of the field coil used in the conventional starter, the PS starter uses two types of permanent magnets: main magnets and interpolar magnets. The main magnets and interpolar magnets have been efficiently arranged to increase the magnetic flux and to shorten the length of the yoke.

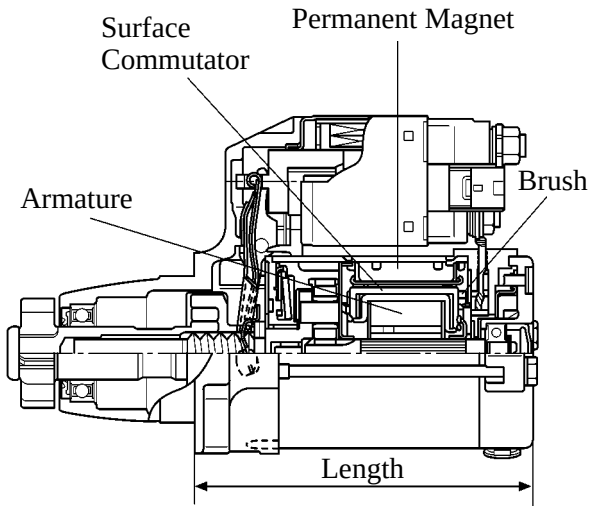

206EG19

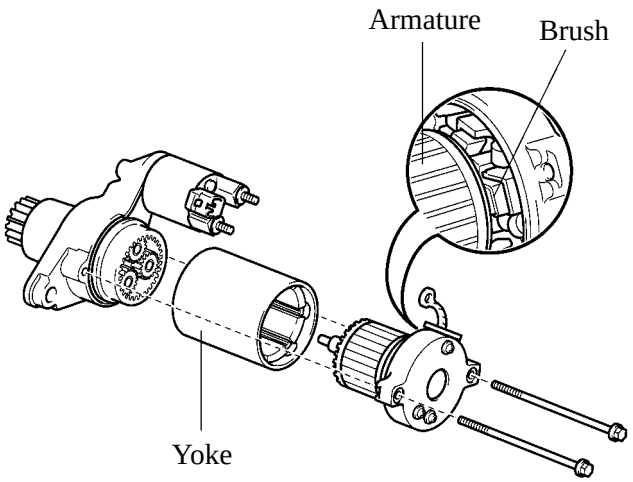

206EG18

▶ **Specifications** ●

Type	PS Starter (PS1.7)
Length	128 mm (5.04 in.)
Weight	2950 g (6.50 lb)
Rating Voltage	12 V
Rating Output	1.7 kW
Rotating Direction	Counterclockwise*

*: Viewed from Pinion Side

2. Construction

Instead of the round-shaped conductor wires used in the conventional starter, the PS type starter uses square-shaped conductors. In this type of construction, square-shaped conductors can achieve the same conditions as those achieved by winding numerous round-shaped conductor wires, but without increasing the mass. As a result, the output torque is increased, and the armature coil is more compact.

Because the surface of the square-shaped conductors that are used in the armature coil functions as a commutator, the overall length of the PS type starter has been shortened.

Conventional Type Starter

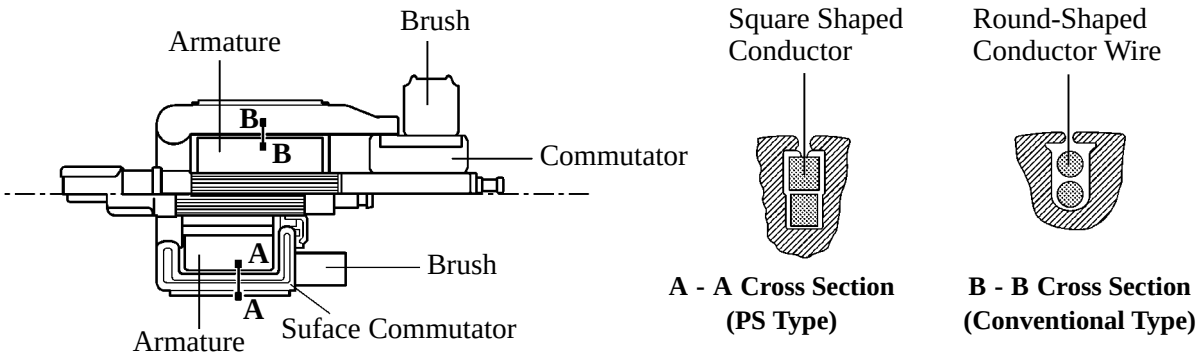

PS Starter

206EG20

Instead of the field coils used in the conventional starter, the PS type starter uses two types of permanent magnets: the main magnets and the interpolar magnets. The main and interpolar magnets are arranged alternately inside the yoke. This allows the magnetic flux generated between the main and interpolar magnets to be added to the magnetic flux generated by the main magnets. In addition to increasing the amount of magnetic flux, this construction shortens the overall length of the yoke.

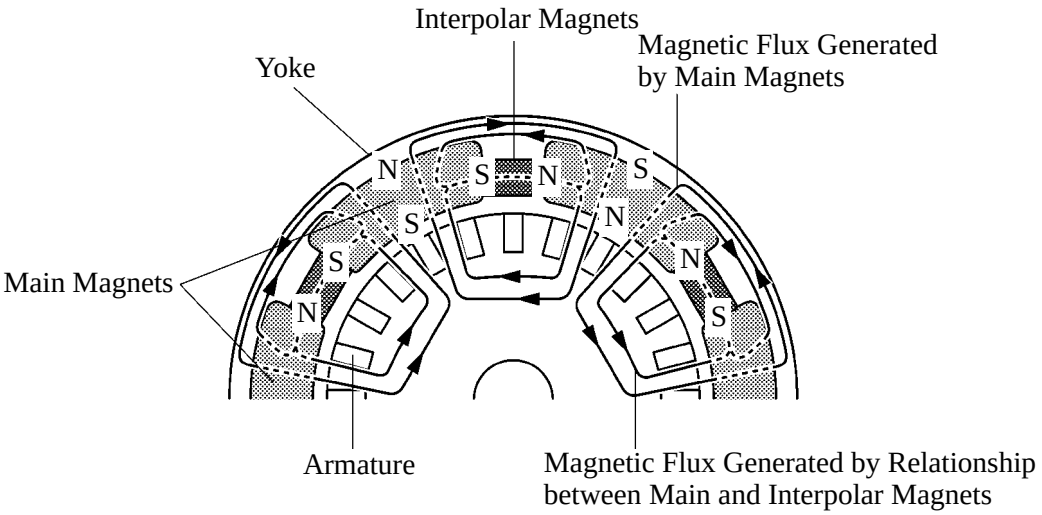

Cross Section of Yoke Portion

264EG14

●SERPENTINE BELT DRIVE SYSTEM

1. General

▶Accessory components are driven by a serpentine belt consisting of a single V-ribbed belt. It reduces the overall engine length, weight and number of engine parts.

▶An automatic tensioner eliminates the need for tension adjustment.

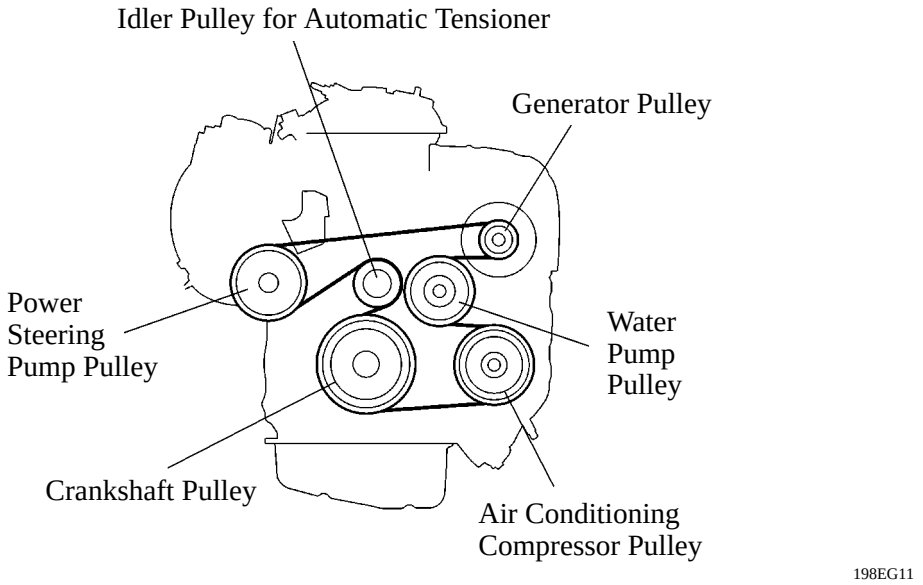

2. Automatic Tensioner

▶The automatic tensioner consists of an idler pulley, an arm, and a tensioner. The idler pulley maintains belt tension by the force of the spring that is located in the tensioner.

▶Due to the different suppliers used, the tensioner comes in two types, although their basic operation remain the same and they are interchangeable.

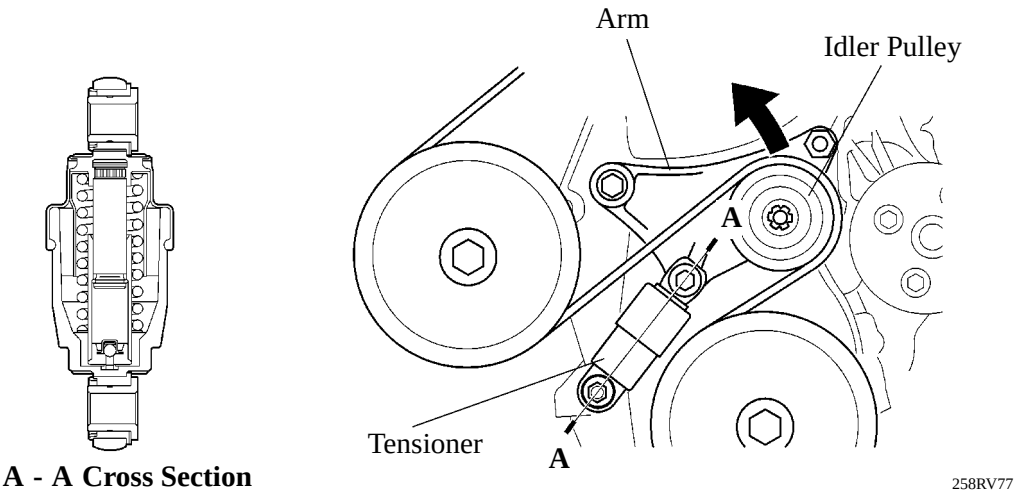

●ENGINE CONTROL SYSTEM

1. General

The engine control system of the 2AZ-FE engine has the following features.

System	Outline
SFI [Sequential Multiport Fuel Injection]	▶An L-type SFI system directly detects the intake air mass with a hot wire type mass air flow meter. ▶The fuel injection system is a sequential multiport fuel injection system. ▶Fuel injection takes two forms: Synchronous injection, which always takes place with the same timing in accordance with the basic injection duration and an additional correction based on the signals provided by the sensors. Non-synchronous injection, which takes place at the time an injection request based on the signals provided by the sensors is detected, regardless of the crankshaft position. ▶Synchronous injection is further divided into group injection during a cold start, and independent injection after the engine is started.
ESA [Electronic Spark Advance]	▶Ignition timing is determined by the ECM based on signals from various sensors. The ECM corrects ignition timing in response to engine knocking. ▶This system selects the optimal ignition timing in accordance with the signals received from the sensors and sends the (IGT) ignition signal to the igniter.
ETCS-i [Electronic Throttle Control System-intelligent] [See page EG-49]	Optimally controls the throttle valve opening in accordance with the amount of accelerator pedal effort and the condition of the engine and the vehicle.
VVT-i [Variable Valve Timing-intelligent] [See page EG-51]	Controls the intake camshaft to an optimal valve timing in accordance with the engine condition.
Intake Manifold Runner Valve Control* [See page EG-55]	During idling while the engine is cold, this control closes the intake manifold runner valve in order to create a strong tumble airflow in the intake air. This promotes the mixture of air and fuel and improves combustion efficiency.
Fuel Pump Control [See page EG-58]	▶Fuel pump operation is controlled by signals from the ECM. ▶The fuel pump is stopped, when the SRS airbag is deployed in a frontal, side, and rear of side collision.
Air Conditioning Cut-off Control	By turning the air conditioning compressor ON or OFF in accordance with the engine condition, drivability is maintained.
Cooling Fan Control [See page EG-59]	Cooling fan operation is controlled by signals from the ECM based on the engine coolant temperature sensor signal and air conditioning operation.
Air Fuel Ratio Sensor and Oxygen Sensor Heater Control	Maintains the temperature of the air fuel ratio sensor or oxygen sensor at an appropriate level to increase accuracy of detection of the oxygen concentration in the exhaust gas.
Evaporative Emission Control [See page EG-60]	▶The ECM controls the purge flow of evaporative emission (HC) in the canister in accordance with engine conditions. ▶Approximately five hours after the engine switch has been turned OFF, the ECM operates the canister pump module to detect any evaporative emission leakage occurring between the fuel tank and the canister through changes in the fuel tank pressure.

*: Only for California package models.

(Continued)

System	Outline
Engine Immobilizer	Prohibits fuel delivery and ignition if an attempt is made to start the engine with an invalid key.
Diagnosis [See page EG-72]	When the ECM detects a malfunction, the ECM diagnoses and memorizes the failed section.
Fail-Safe [See page EG-73]	When the ECM detects a malfunction, the ECM stops or controls the engine according to the data already stored in the memory.

2. Construction

The configuration of the engine control system is as shown in the following chart.

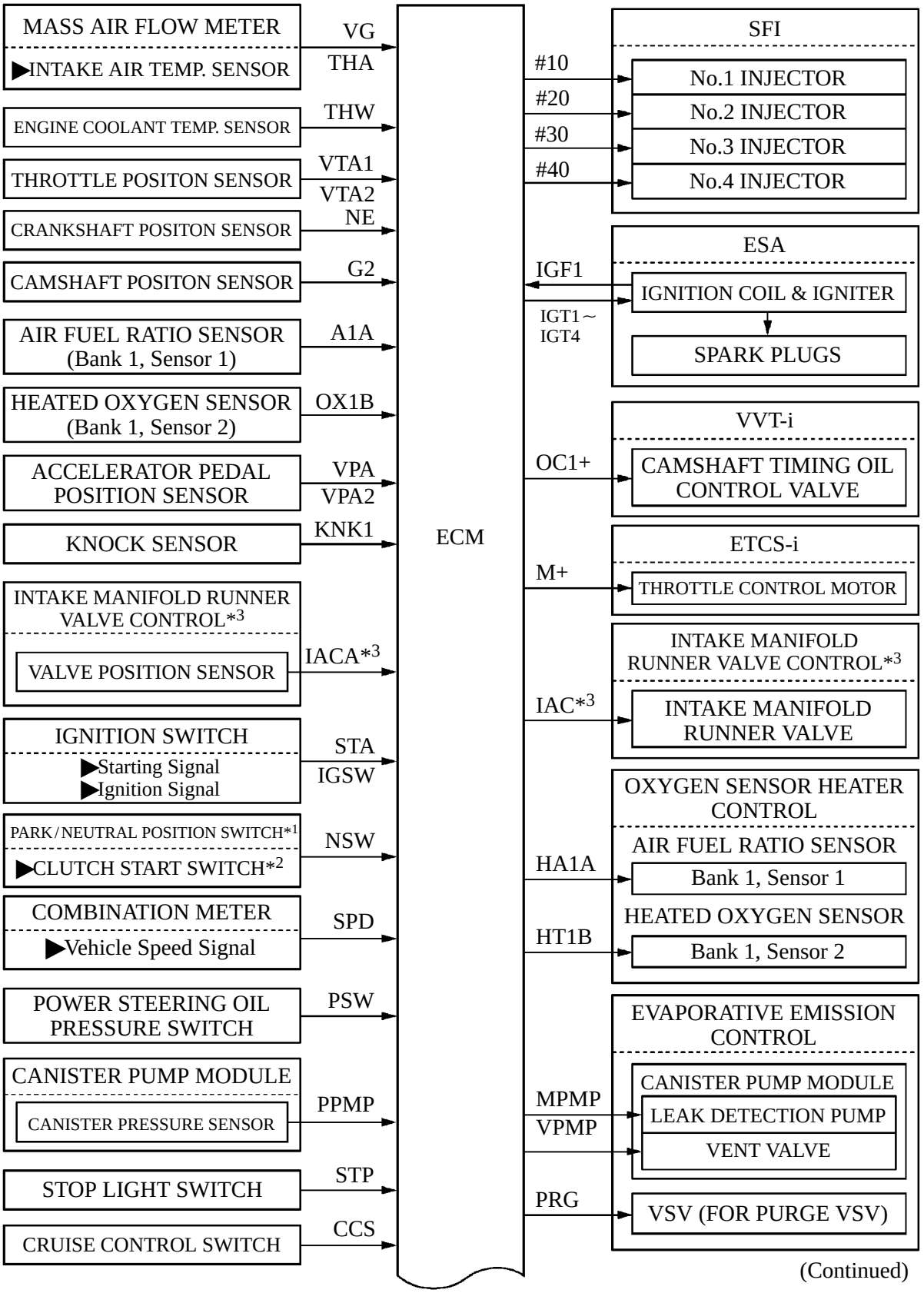

(Continued)

025EG09P

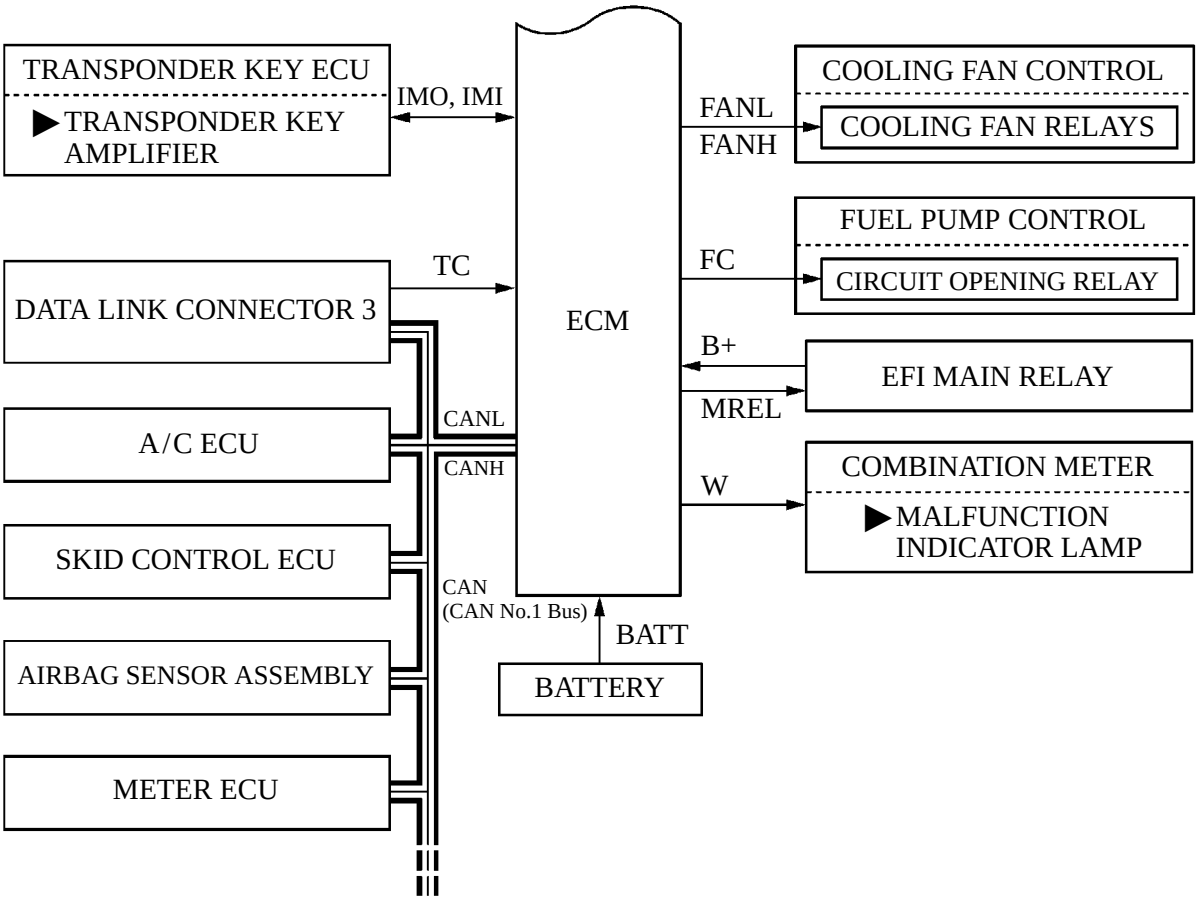

*1: With automatic transaxle model
*2: With manual transaxle model
*3: Only for California package model

025EG10P

3. Engine Control System Diagram

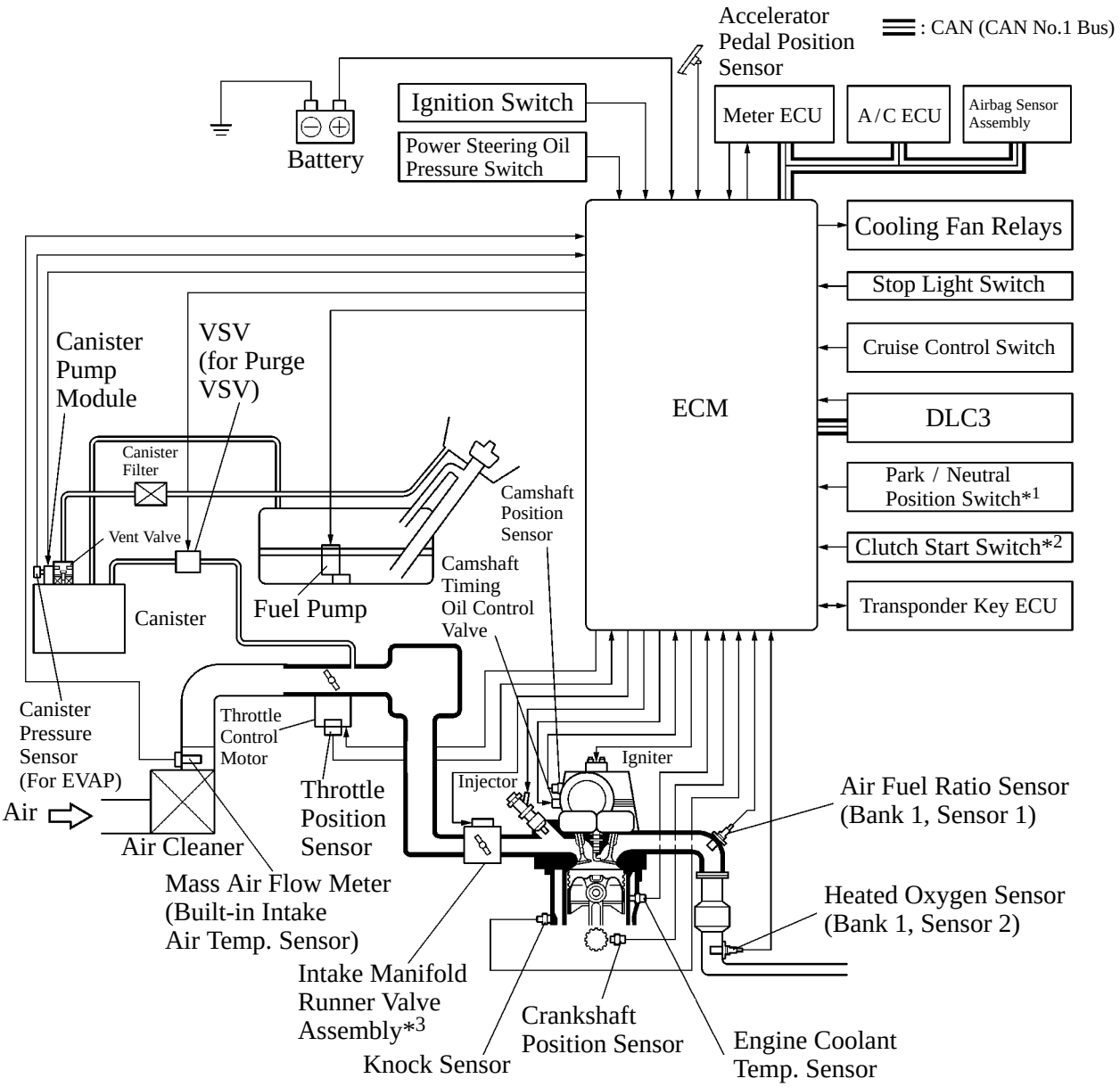

*1: With automatic transaxle model
*2: With manual transaxle model
*3: Only for California package model

4. Layout of Main Components

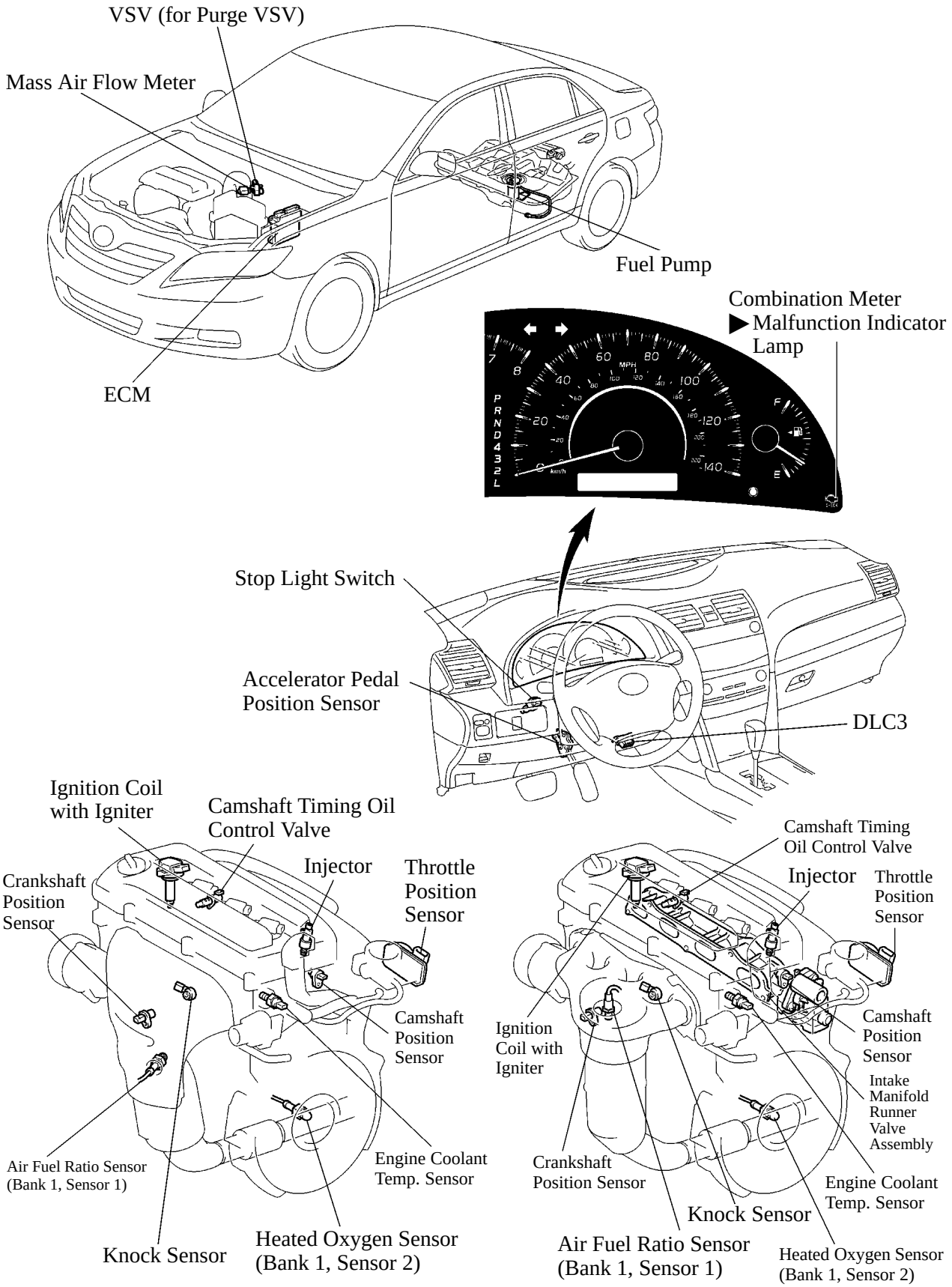

Except California Package Model **California Package Model**

025EG12Y

5. Main Component of Engine Control System

General

The main components of the 2AZ-FE engine control system are as follows:

Components	Outline	Quantity	Function
ECM	32-bit CPU	1	The ECM optimally controls the SFI, ESA and ISC to suit the operating conditions of the engine in accordance with the signals provided by the sensors.
Oxygen Sensor (Bank 1, Sensor 2)	Cup Type with Heater	1	This sensor detects the oxygen concentration in the exhaust emission by measuring the electromotive force which is generated in the sensor itself.
Air Fuel Ratio Sensor (Bank 1, Sensor 1)	Planar Type with Heater	1	As with the oxygen sensor, this sensor detects the oxygen concentration in the exhaust emission. However, it detects the oxygen concentration in the exhaust emission linearly.
Mass Air Flow Meter	Hot-wire Type	1	This sensor has a built-in hot-wire to directly detect the intake air mass.
Crankshaft Position Sensor (Rotor Teeth)	Pick-up Coil Type (36-2)	1	This sensor detects the engine speed and performs the cylinder identification.
Camshaft Position Sensor (Rotor Teeth)	Pick-up Coil Type (36-2)	1	This sensor performs the cylinder identification.
Engine Coolant Temperature Sensor	Thermistor Type	1	This sensor detects the engine coolant temperature by means of an internal thermistor.
Intake Air Temperature Sensor	Thermistor Type	1	This sensor detects the intake air temperature by means of an internal thermistor.
Knock Sensor	Built-in Piezoelectric Type (Flat Type)	1	This sensor detects an occurrence of the engine knocking indirectly from the vibration of the cylinder block caused by the occurrence of engine knocking.
Throttle Position Sensor	No-contact Type	1	This sensor detects the throttle valve opening angle.
Accelerator Pedal Position Sensor	No-contact Type	1	▶ This sensor detects the amount of pedal effort applied to the accelerator pedal. ▶ The sensor shape is different between TMC made models and TMMK made models. However, those are the no-contact type sensors using Hall IC.
Injector	12-Hole Type	4	The injector is an electromagnetically-operated nozzle which injects fuel in accordance with signals from the ECM.

Mass Air Flow Meter

▶ This mass air flow meter, which is a plug-in type, allows a portion of the intake air to flow through the detection area. By directly measuring the mass and the flow rate of the intake air, the detection precision is improved and the intake air resistance is reduced.

▶ This mass air flow meter has a built-in intake air temperature sensor.

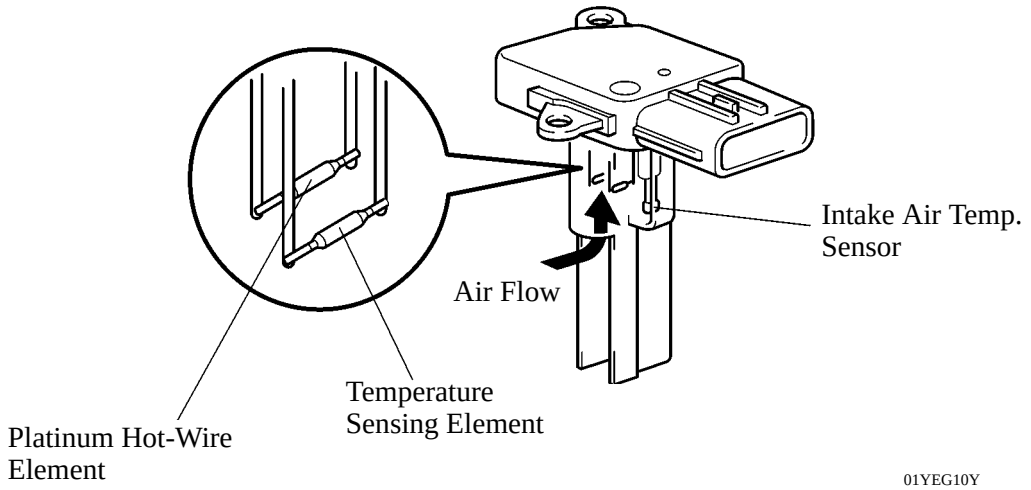

Crankshaft Position Sensor

The timing rotor of the crankshaft consists of 34 teeth, with 2 teeth missing. The crankshaft position sensor outputs the crankshaft rotation signals every 10● and the missing teeth are used to determine the top-dead-center.

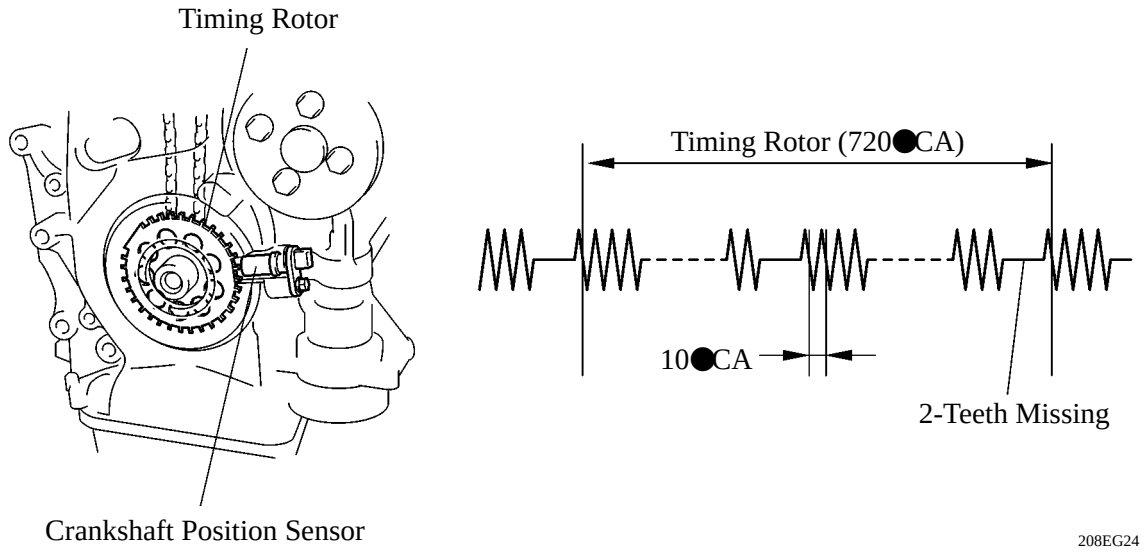

Camshaft Position Sensor

The camshaft position sensor is mounted on the left bank of cylinder head. To detect the camshaft position, a protrusion that is provided on the timing pulley is used to generate 1 pulse for every 2 revolution of the crankshaft.

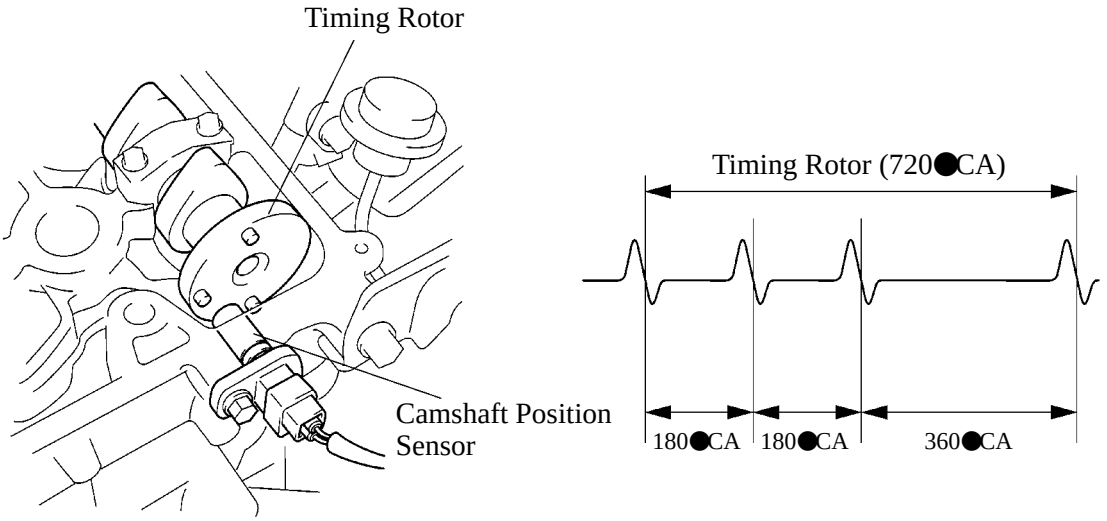

208EG25

Accelerator Pedal Position Sensor

1) TMC Made Model

This no-contact type accelerator pedal position sensor uses a Hall IC, which is mounted on the accelerator pedal arm.

▶ The magnetic yoke is mounted at the base of the accelerator pedal arm. This yoke rotates around the Hall IC in accordance with the amount of effort that is applied to the accelerator pedal. The Hall IC converts the changes in the magnetic flux that occur into electrical signals, and outputs them in the form of accelerator pedal position signals to the ECM.

▶ The Hall IC contains two circuits, one for the main signal, and one for the sub signal. It converts the accelerator pedal position (angle) into electric signals that have differing characteristics and outputs them to the ECM.

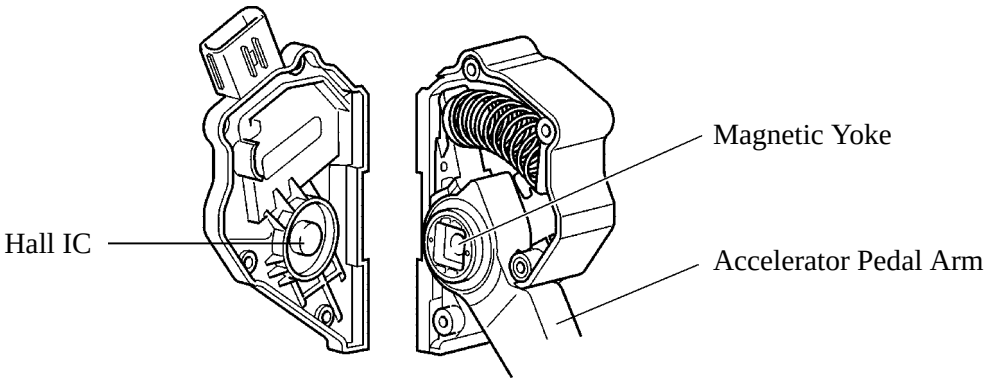

0140EG125C

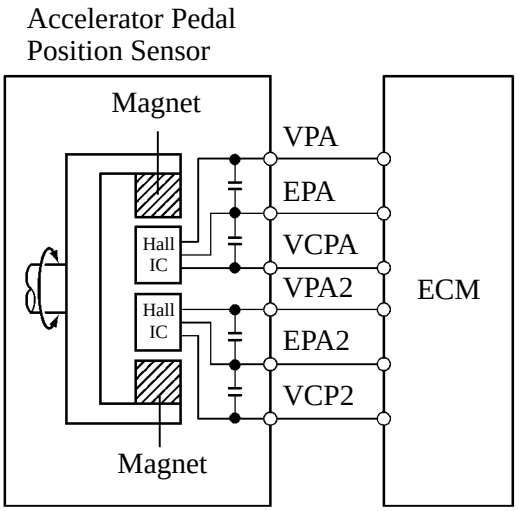

228TU24

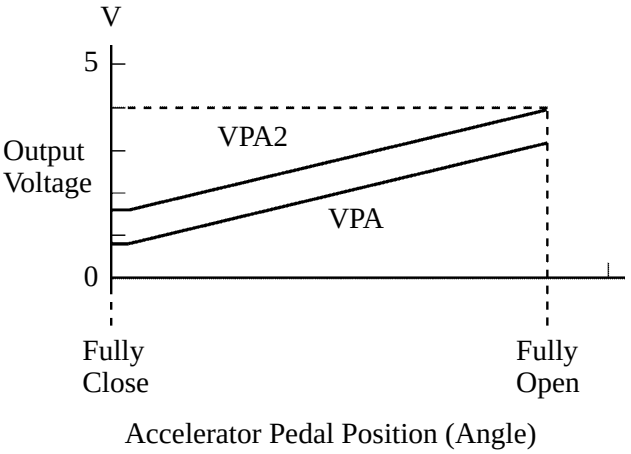

0140EG126C

Service Tip

The inspection method differs from a conventional accelerator pedal position sensor because this sensor uses a Hall IC. For details, refer to the 2007 Camry Repair Manual (Pub. No. RM0250U).

2) TMMK Made Model

The non-contact type accelerator pedal position sensor uses a Hall IC, which is mounted on the accelerator pedal arm.

▶ The magnetic yoke that is mounted at the base of the accelerator pedal arm moves around the Hall IC in accordance with the amount of effort that is applied to the accelerator pedal. The Hall IC converts the changes in the magnetic flux that occur at that time into electrical signals, and outputs them in the form of accelerator pedal effort to the ECM.

▶ This accelerator pedal position sensor includes 2 Hall ICs and circuits for the main and sub signals. It converts the accelerator pedal depressing angles into electric signals with two differing characteristics and outputs them to the ECM.

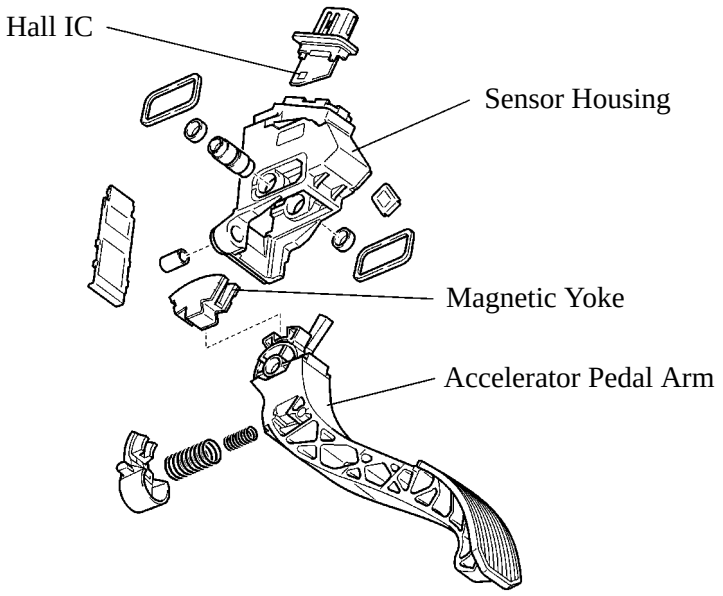

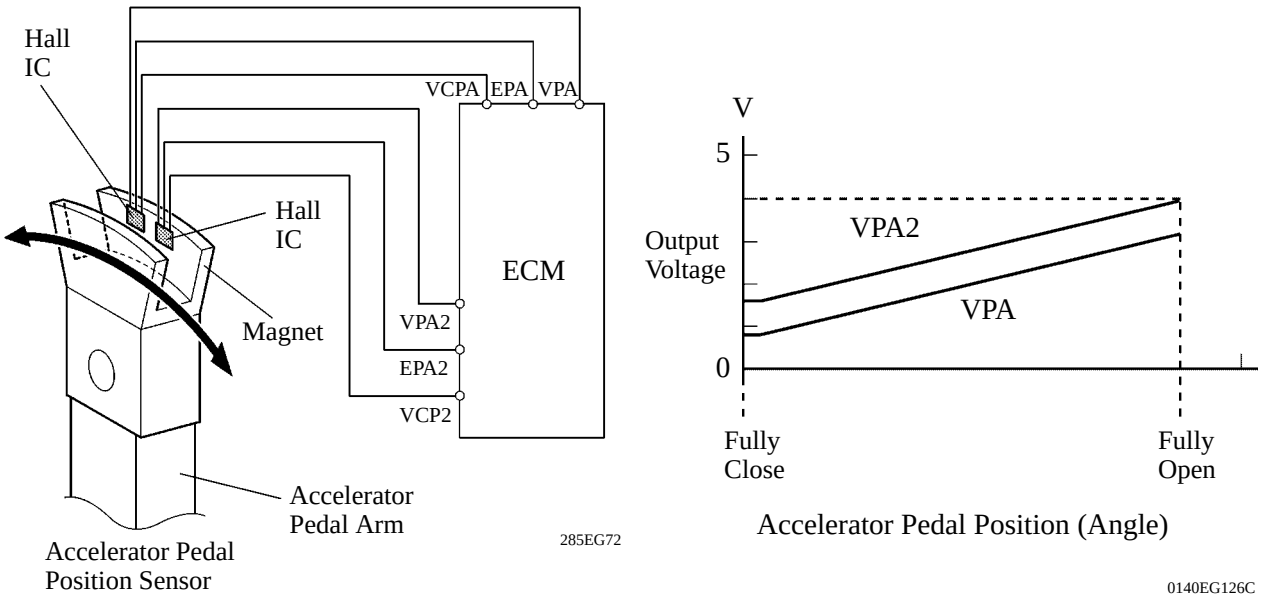

Service Tip

The inspection method differs from the conventional accelerator pedal position sensor because this sensor uses a hall IC. For details, refer to the 2007 Camry Repair Manual (Pub. No. RM0250U).

Throttle Position Sensor

The no-contact type throttle position sensor uses a Hall IC, which is mounted on the throttle body.

▶ The Hall IC is surrounded by a magnetic yoke. The Hall IC converts the changes that occur in the magnetic flux at that time into electrical signals and outputs them in the form of a throttle valve effort to the ECM.

▶ The Hall IC contains circuits for the main and sub signals. It converts the throttle valve opening angles into electric signals with two differing characteristics and outputs them to the ECM.

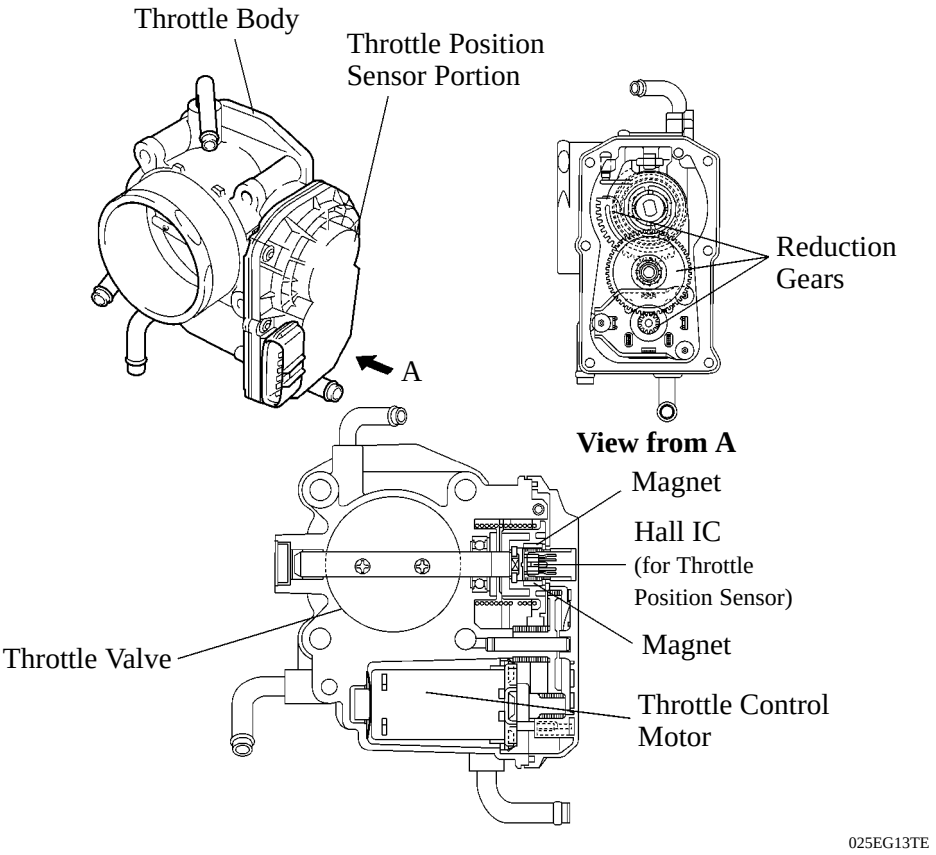

Cross Section

Throttle Position Sensor

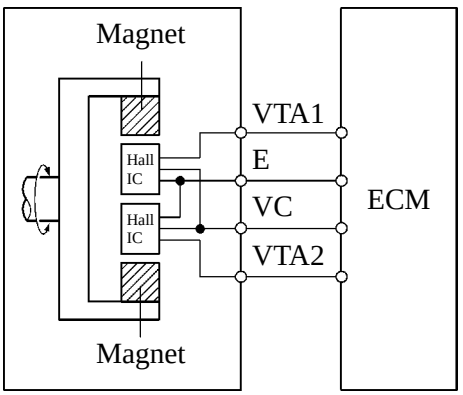

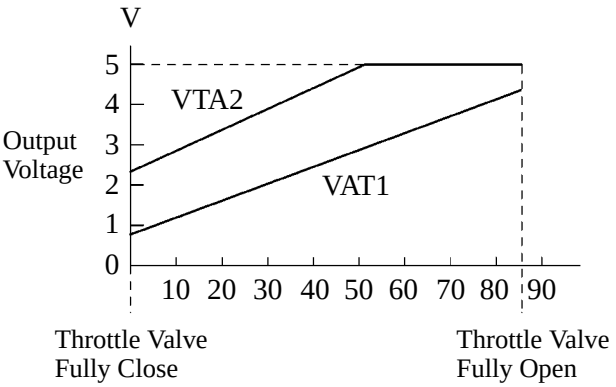

Throttle Valve Opening Angle

230LX12 238EG79

Service Tip

The inspection method differs from the conventional throttle position sensor because this sensor uses a hall IC. For details, refer to the 2007 Camry Repair Manual (Pub. No. RM0250U).

Knock Sensor (Flat Type)

1) General

In the conventional type knock sensor (resonant type), a vibration plate, which has the same resonance point as the knocking frequency of the engine, is built in and can detect the vibration in this frequency band.
On the other hand, a flat type knock sensor (non-resonant type) has the ability to detect vibration in a wider frequency band from about 6 kHz to 15 kHz, and has the following features:

▶ The engine knocking frequency will change a bit depending on the engine speed. The flat type knock sensor can detect vibration even when the engine knocking frequency is changed. Thus the vibration detection ability is increased compared to the conventional type knock sensor, and a more precise ignition timing control is possible.

—·— : Conventional Type
——— : Flat Type

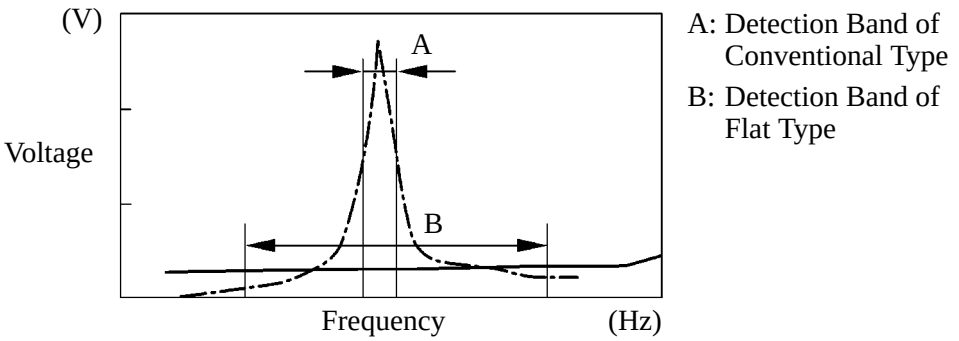

214CE04

Characteristic of Knock Sensor

2) Construction

▶ The flat type knock sensor is installed on the engine through the stud bolt installed on the cylinder block. For this reason, a hole for the stud bolt is running through in the center of the sensor.

▶ Inside of the sensor, a steel weight is located on the upper portion and a piezoelectric element is located under the weight through the insulator.

▶ The open/short circuit detection resistor is integrated.

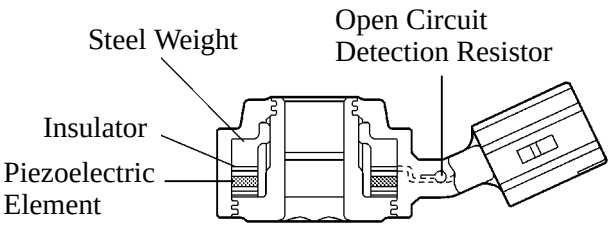

Flat Type Knock Sensor
(Non-Resonant Type)

214CE01

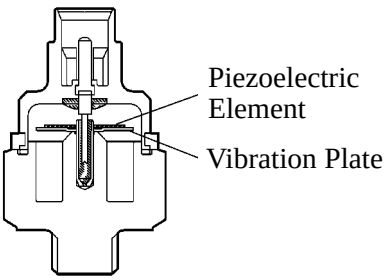

Conventional Type Knock Sensor
(Resonant Type)

214CE02

3) Operation

The knocking vibration is transmitted to the steel weight and its inertia applies pressure to the piezoelectric element. The action generates electromotive force.

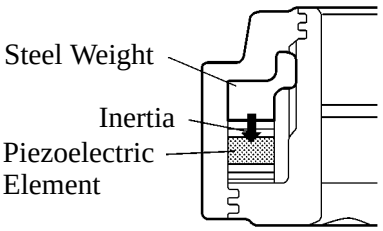

214CE08

4) Open/Short Circuit Detection Resistor

During the ignition is ON, the open/short circuit detection resistor in the knock sensor and the resistor in the ECM keep the voltage at the terminal KNK1 of engine constant.
An IC (Integrated Circuit) in the ECM is always monitoring the voltage of the terminal KNK1. If the open/short circuit occurs between the knock sensor and the ECM, the voltage of the terminal KNK1 will change and the ECM detects the open/short circuit and stores DTC (Diagnostic Trouble Code).

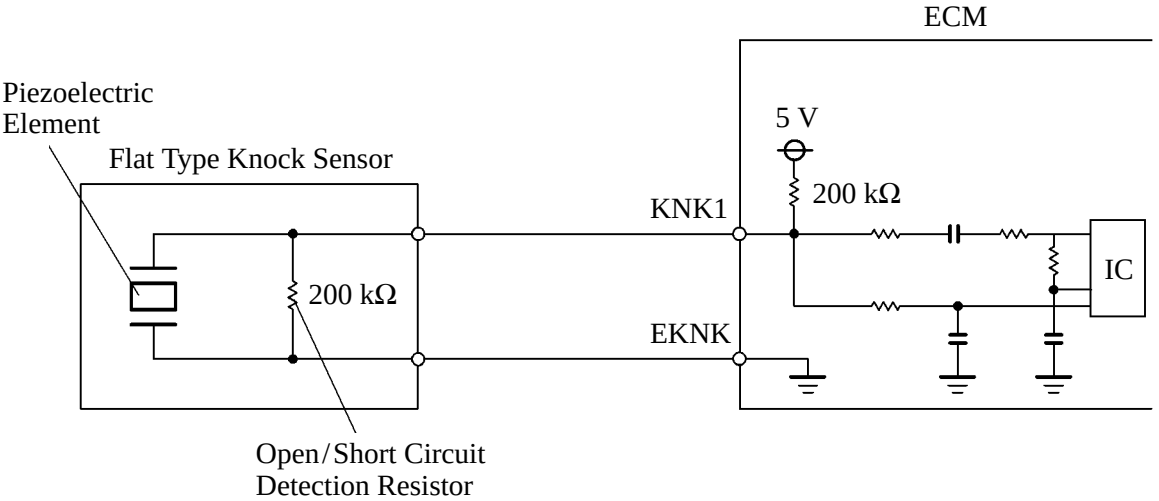

214CE06

Service Tip

▶ In accordance with the adoption of open/short circuit detection resistor, the inspection method for the sensor has been changed. For details, refer to 2007 Camry Repair Manual (Pub. No. RM0250U).

▶ To prevent the water accumulation in the connector, make sure to install the flat type knock sensor in the position as shown in the following illustration.

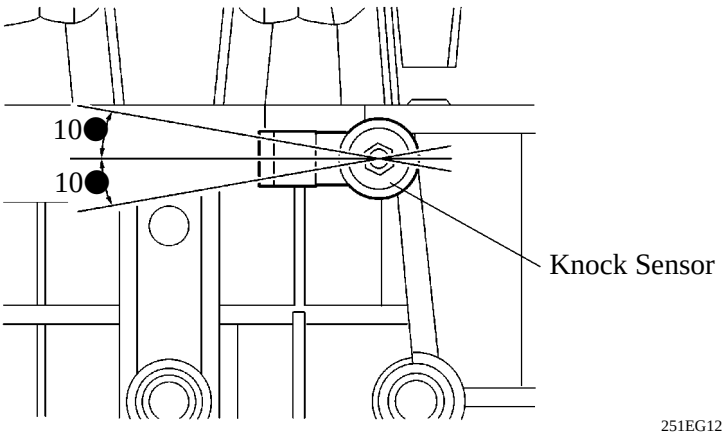

251EG12

Heated Oxygen Sensor and Air Fuel Ratio Sensor

1) General

▶The heated oxygen sensor and the air fuel ratio sensor differ in output characteristics.

▶The output voltage of the heated oxygen sensor changes in accordance with the oxygen concentration in the exhaust gas. The ECM uses this output voltage to determine whether the present air-fuel ratio is richer or leaner than the stoichiometric air-fuel ratio.

▶Approximately 0.4 V is constantly applied to the air-fuel ratio sensor, which outputs an amperage that varies in accordance with the oxygen concentration in the exhaust gas. The ECM converts the changes in the output amperage into voltage in order to linearly detect the present air-fuel ratio.

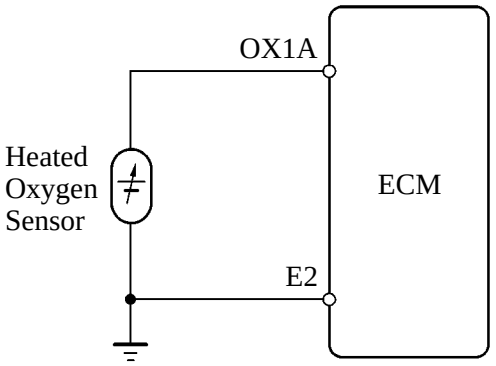

Heated Oxygen Sensor Circuit

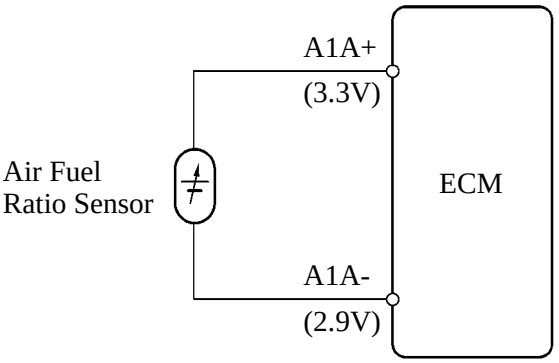

271EG44

Air Fuel Ratio Sensor Circuit

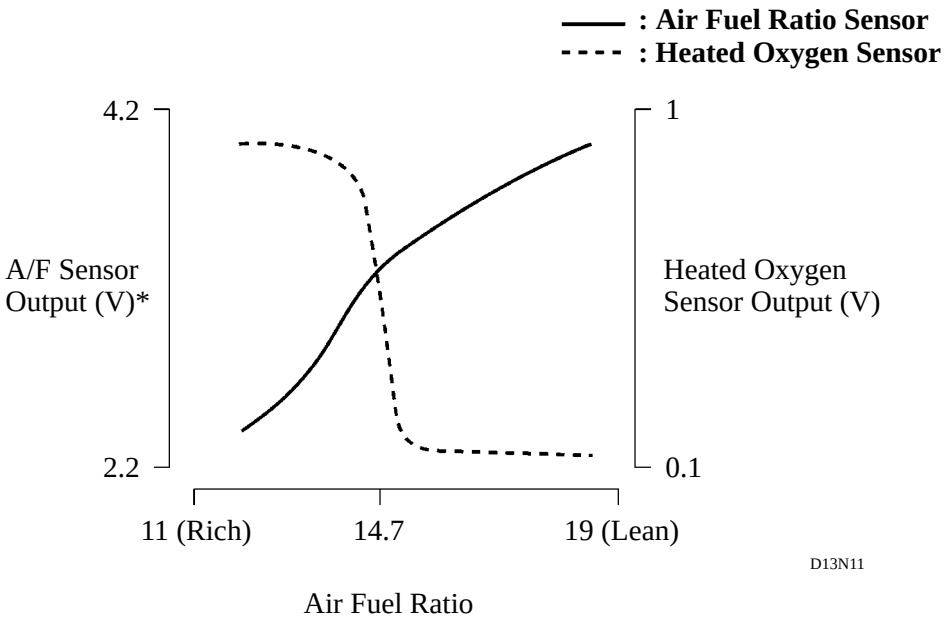

D13N11

*: This calculation value is used internally in the ECM, and is not an ECM terminal voltage.

2) Construction

▶ The basic construction of the heated oxygen sensor and the air-fuel ratio sensor is the same. However, they are divided into the cup type and the planar type, according to the different types of heater construction that are used.

▶ The cup type sensor contains a sensor element that surrounds a heater.

▶ The planar type sensor uses alumina, which excels in heat conductivity and insulation, to integrate a sensor element with a heater, thus improving the warm-up performance of the sensor.

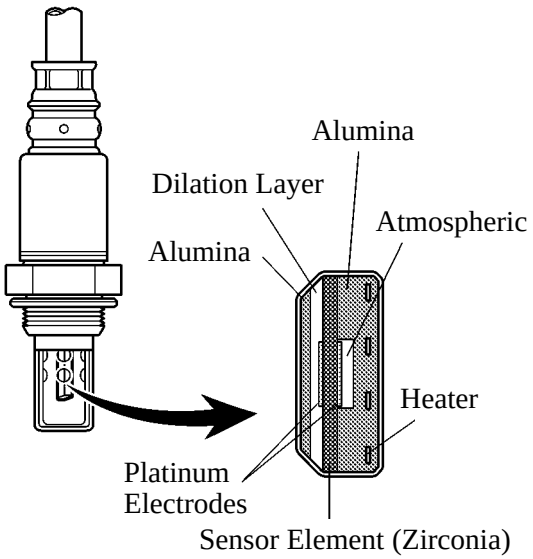

Planar Type Air Fuel Ratio Sensor

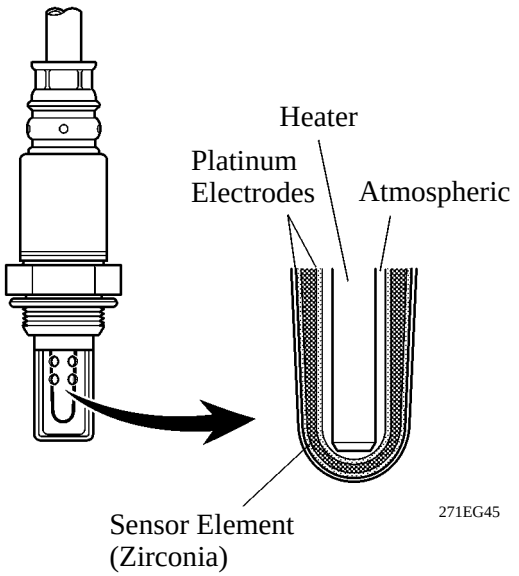

Cup Type Heated Oxygen Sensor

6. ETCS-i (Electronic Throttle Control System-intelligent)

General

In the conventional throttle body, the throttle valve angle is determined invariably by the amount of the accelerator pedal effort. In contrast, ETCS-i uses the ECM to calculate the optimal throttle valve angle that is appropriate for the respective driving condition and uses a throttle control motor to control the angle.

▶ System Diagram ●

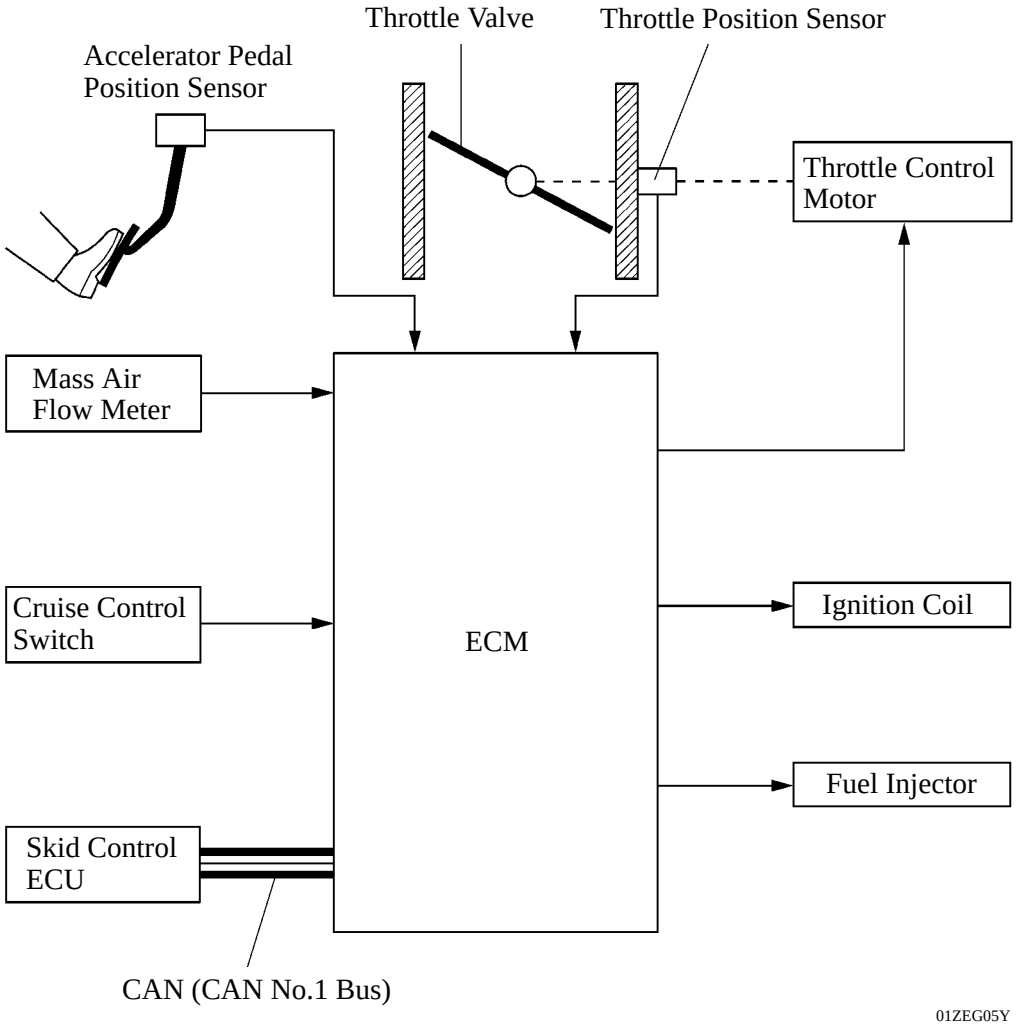

Control

1) General

The ETCS-i consists of the following five functions:

Normal Throttle Control (Non-linear Control)

ISC (Idle Speed Control)

TRAC (Traction Control)

VSC (Vehicle Stability Control)

Cruise Control

2) Normal Throttle Control (non-linear control)

Controls the throttle to an optimal throttle valve angle that is appropriate for the driving condition such as the amount of the accelerator pedal effort and the engine speed in order to realize excellent throttle control and comfort in all operating ranges.

▶ Conceptual Diagrams of Engine Control During Acceleration and Deceleration ●

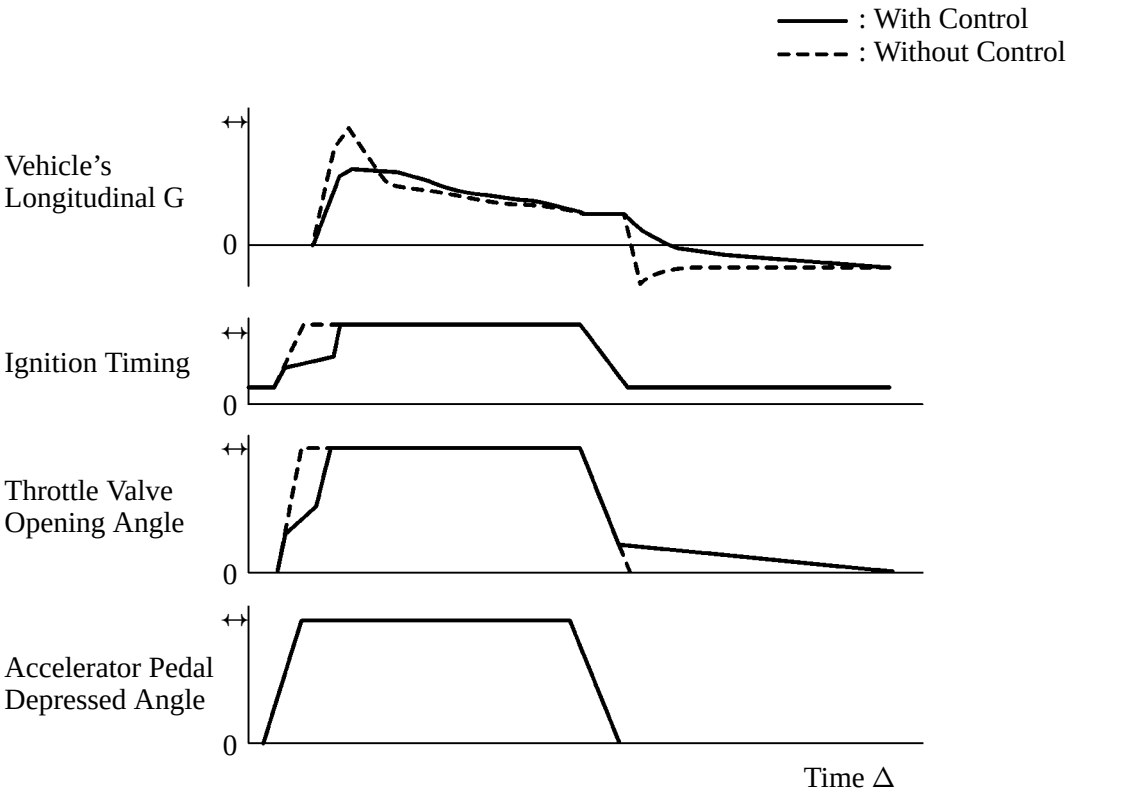

00MEG38Y

3) Idle Speed Control

The ECM controls the throttle valve in order to constantly maintain an ideal idle speed.

4) TRAC Throttle Control

As part of the TRAC system, the throttle valve is closed by a demand signal from the skid control ECU if an excessive amount of slippage is created at a driving wheel, thus facilitating the vehicle in ensuring excellent vehicle stability and driving force.

5) VSC Coordination Control

In order to bring the effectiveness of the VSC system control into full play, the throttle valve angle is controlled by effecting a coordination control with the skid control ECU.

6) Cruise Control

An ECM with an integrated cruise control ECU directly actuates the throttle valve for operation of the cruise control.

7. VVT-i (Variable Valve Timing-intelligent) System

General

▶The VVT-i system is designed to control the intake camshaft within a range of 40●(of Crankshaft Angle) to provide valve timing that is optimally suited to the engine condition. This improves torque in all the speed ranges as well as increasing fuel economy, and reducing exhaust emissions.

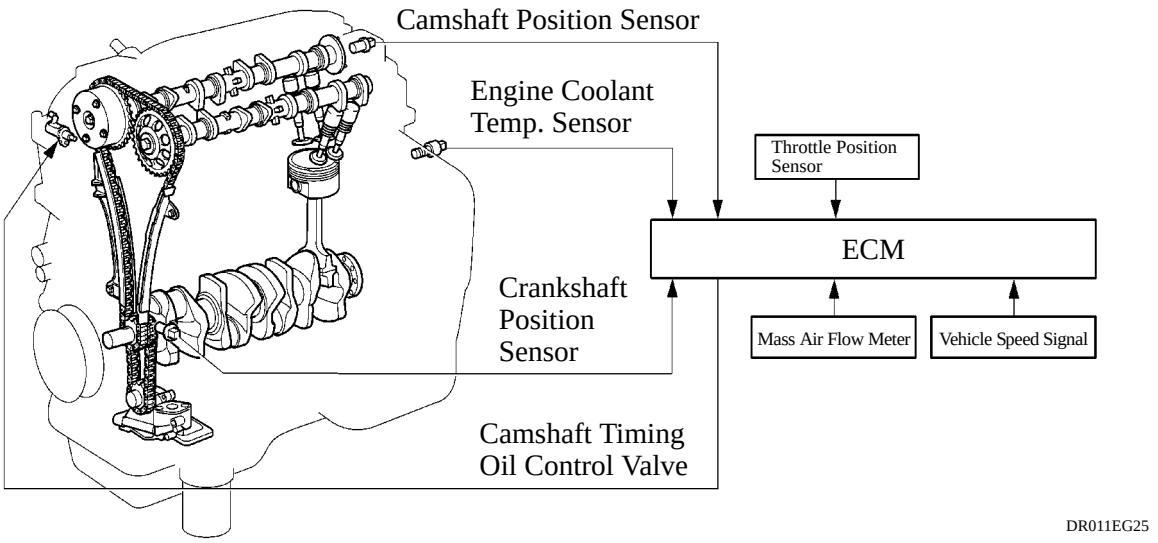

▶Using the engine speed, intake air volume, throttle position and water temperature, the ECM can calculate optimal valve timing for each driving condition and controls the camshaft timing oil control valve. In addition, the ECM uses signals from the camshaft position sensor and the crankshaft position sensor to detect the actual valve timing, thus providing feedback control to achieve the target valve timing.

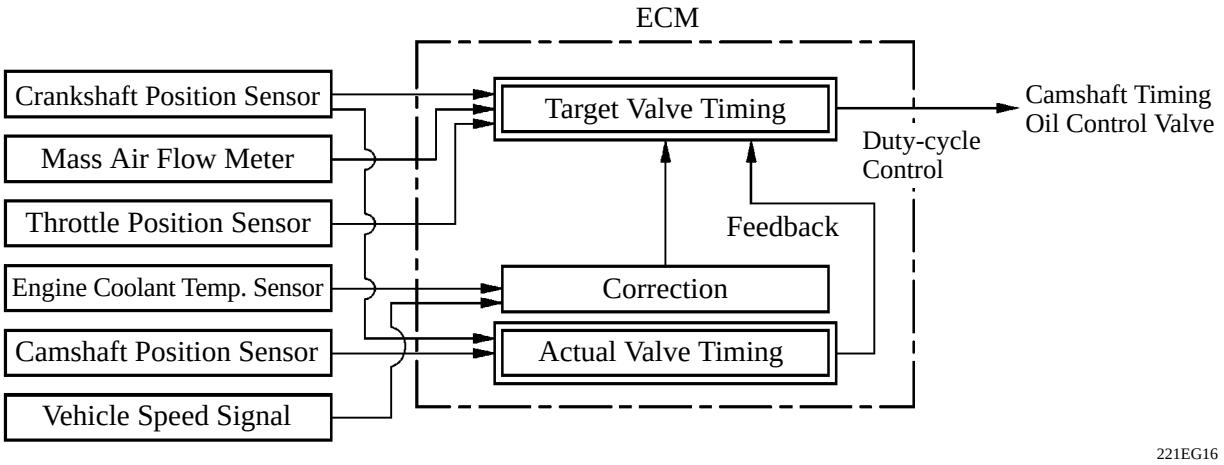

Effectiveness of the VVT-i System

Operation State	Objective	Effect
▶During Idling ▶At Light Load	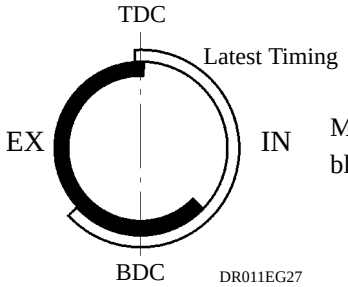 Minimizing overlap to prevent blow back to the intake side	▶Stabilized idling rpm ▶Better fuel economy
At Medium Load	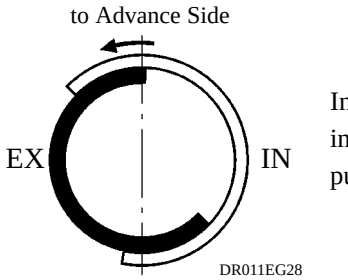 Increasing overlap to increase internal EGR to reduce pumping loss	▶Better fuel economy ▶Improved emission control
In Low to Medium Speed Range with Heavy Load	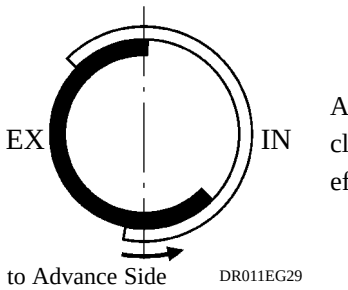 Advancing the intake valve close timing for volumetric efficiency improvement	Improved torque in low to medium speed range
In High Speed Range with Heavy Load	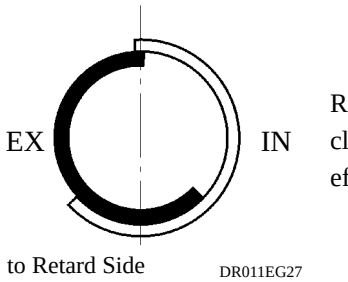 Retarding the intake valve close timing for volumetric efficiency improvement	Improved output
At Low Temp.	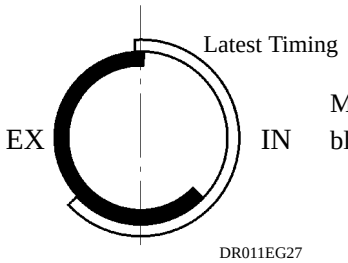 Minimizing overlap to prevent blow back to the intake side	▶Stabilized fast idle rpm ▶Better fuel economy
▶Upon Starting ▶Stopping the Engine	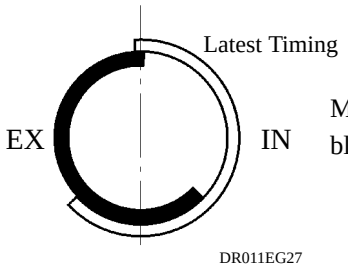 Minimizing overlap to prevent blow back to the intake side	Improved startability

Construction

1) VVT-i Controller

▶ This controller consists of the housing driven from the timing chain and the vane coupled with the intake camshaft.

▶ The oil pressure sent from the advance or retard side path at the intake camshaft causes rotation in the VVT-i- controller vane circumferential direction to vary the intake valve timing continuously.
When the engine is stopped, the intake camshaft will be in the most retarded state to ensure startability.
When hydraulic pressure is not applied to the VVT-i controller immediately after the engine has been started, the lock pin locks the movement of the VVT-i controller to prevent a knocking noise.

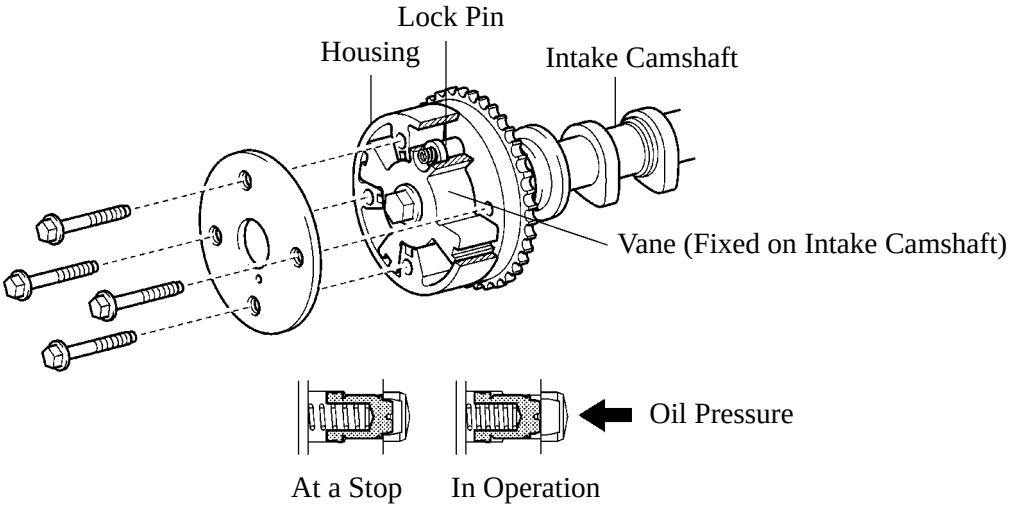

169EG36

Lock Pin

2) Camshaft Timing Oil Control Valve

The camshaft timing oil control valve controls the spool valve position in accordance with the duty control from the ECM thus allocating the hydraulic pressure that is applied to the VVT-i controller to the advance and the retard side. When the engine is stopped, the camshaft timing oil control valve is in the most retarded state.

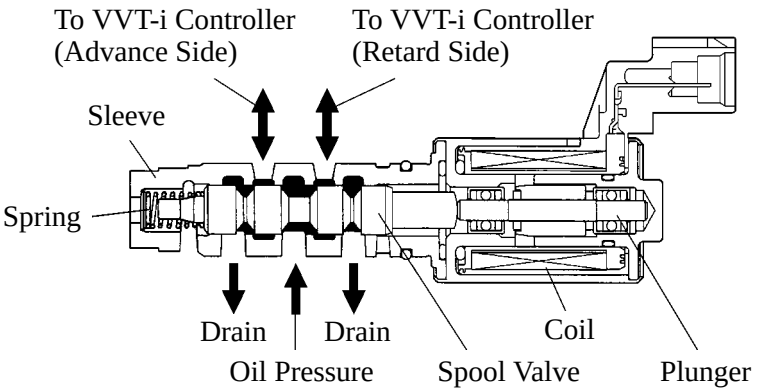

221EG17

Operation

1) Advance

When the camshaft timing oil control valve is positioned as illustrated below by the advance signal from the ECM, the resultant oil pressure is applied to the timing advance side vane chamber to rotate the camshaft in the timing advance direction.

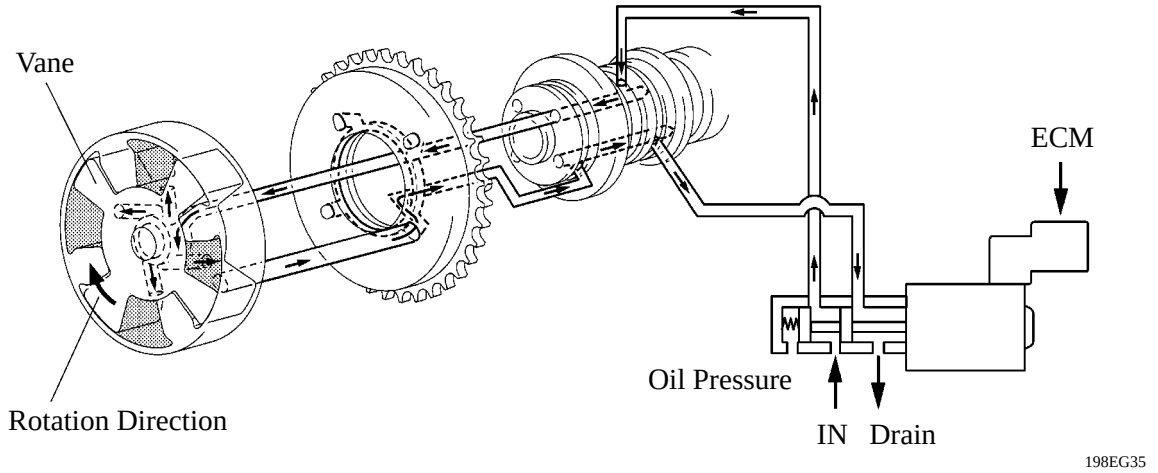

2) Retard

When the camshaft timing oil control valve is positioned as illustrated below by the retard signal from the ECM, the resultant oil pressure is applied to the timing retard side vane chamber to rotate the camshaft in the timing retard direction.

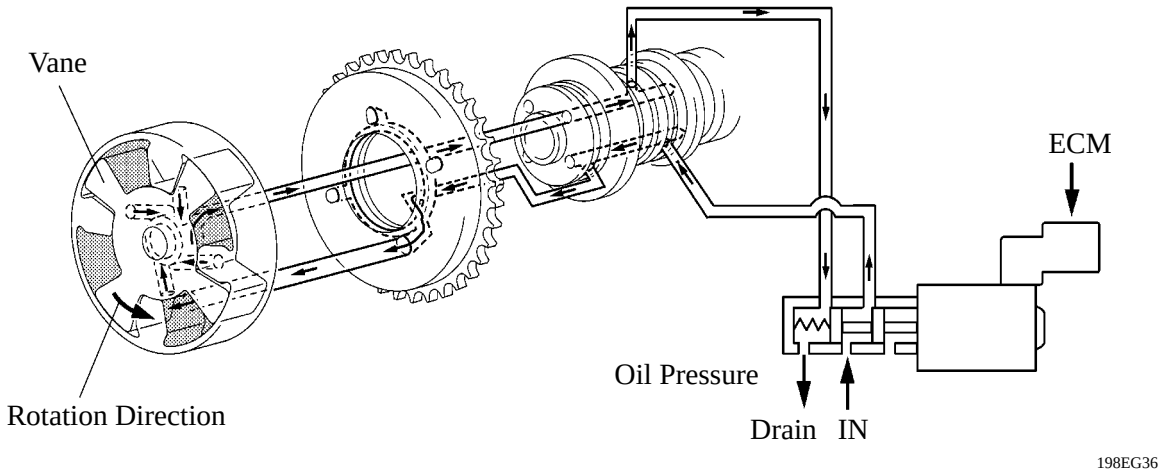

3) Hold

After reaching the target timing, the valve timing is held by keeping the camshaft timing oil control valve in the neutral position unless the traveling state changes.
This adjusts the valve timing at the desired target position and prevents the engine oil from running out when it is unnecessary.

8. Intake Manifold Runner Valve Control (California Package Model)

General

When the engine is cold condition and idling, this control closes the intake manifold runner valve (with an opening at the top) that is provided in the intake manifold. This creates a strong tumble airflow in the intake air that passes through the opening, which promotes the mixture of the air and fuel and improves combustion efficiency.

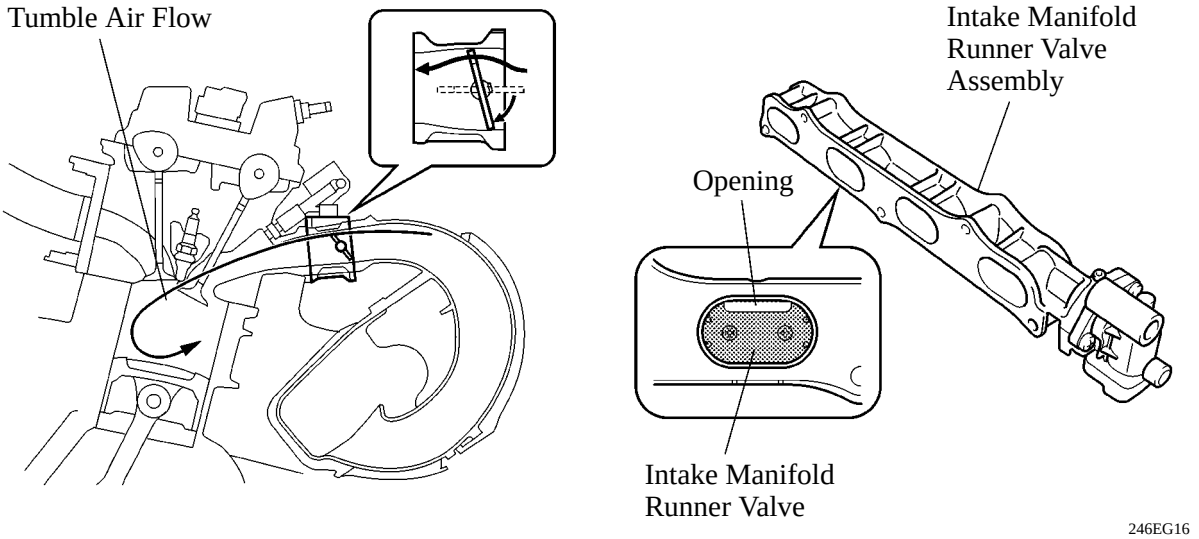

▶ System Diagram ●

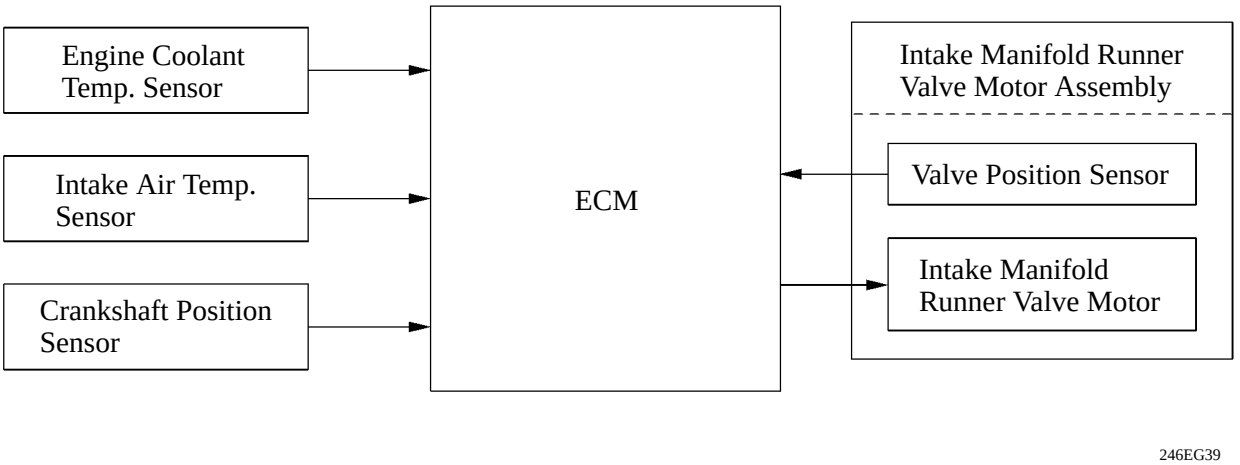

Construction

1) Intake Manifold Runner Valve Assembly

The intake manifold runner valve assembly consists primarily of an intake manifold runner valve, valve shaft, valve body, and an intake manifold runner valve motor assembly.

Each cylinder contains 1 intake manifold runner valve, which is mounted on the valve shaft axis.

The intake manifold runner valve motor assembly consists primarily of a DC motor that rotates the runner valve (valve shaft), a position sensor (Hall IC) that detects the rotating position, and a gear portion that transmits the rotation of the DC motor to the valve shaft.

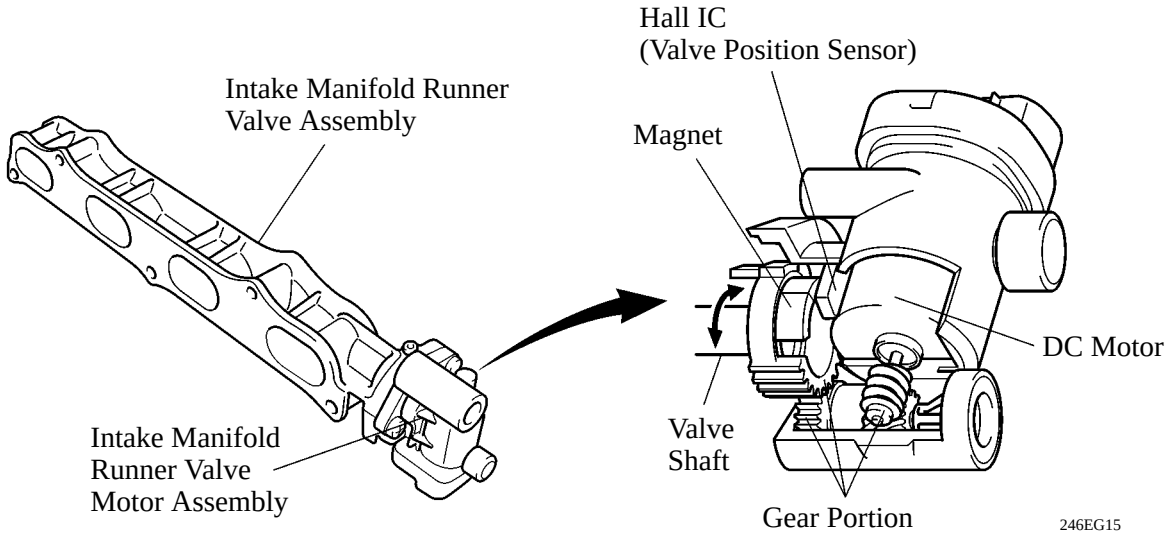

2) Valve Position Sensor

The valve position sensor, which is a non-contact type that uses a Hall IC and a magnet, is mounted on the valve shaft axis.

The valve position sensor, which is located in the intake manifold runner valve motor assembly, detects the opening position of the runner valve. This sensor gives the ECM feedback on the opening position of the runner valve, which is used for SFI control, as well as for detecting the failure of the runner valve, such as if the runner valve is stuck.

The ECM detects a “low sensor output failure” (DTC P2016) when the output voltage of the valve position sensor is 0.2V or less, and a “high sensor output failure” (DTC P2017) when the output voltage is 4.8V or more.

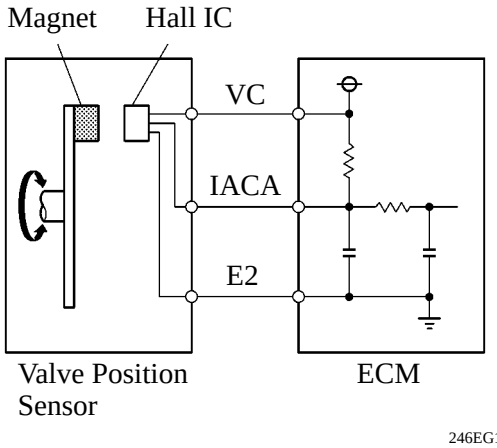

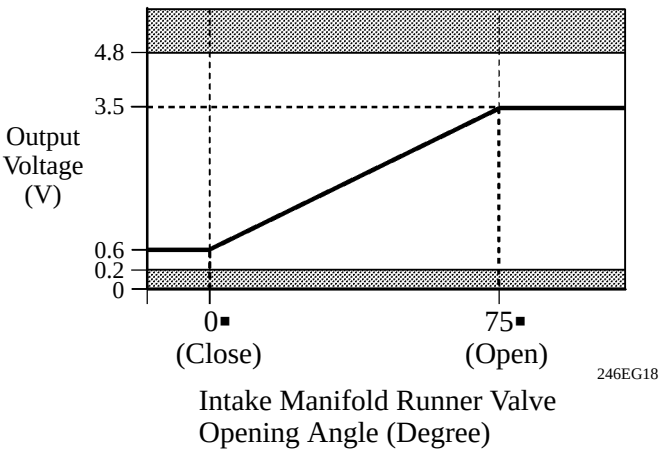

Operation

The ECM fully closes the intake manifold runner valve during engine idling when the engine coolant temperature is between -10▪C (14▪F) and 60▪C (140▪F) and the intake air temperature is more than -10 ▪C (14▪F). Other than this condition, the ECM fully opens the intake manifold runner valve.

When the engine is stopped, the intake manifold runner valve is kept in a half-open condition to ensure the engine startability.

▶ Open and closed condition for intake manifold runner valve ●

Temperature of the engine coolant and the intake air when the engine starting.	Before warming up the engine.	When one of the following conditions is met: Throttle valve opening angle is 1.5▪ or more. Vehicle speed is 3 mph (5 km/h) or more. Engine speed is 3,000 rpm or more When the shift lever is in other than the P and N position.	After warming up of the engine
Engine coolant temp. is less than -10▪C (14▪F) or more than 60▪C (140▪F) or intake air temp. is less than -10▪C (14▪F).	OPEN	OPEN	OPEN
Engine coolant temp. is between -10▪C (14▪F) and 60▪C (140▪F). Intake air temp. is -10▪C (14▪F) or more.	CLOSED	OPEN	OPEN

▶ Intake manifold runner valve operation (Normal condition) ●

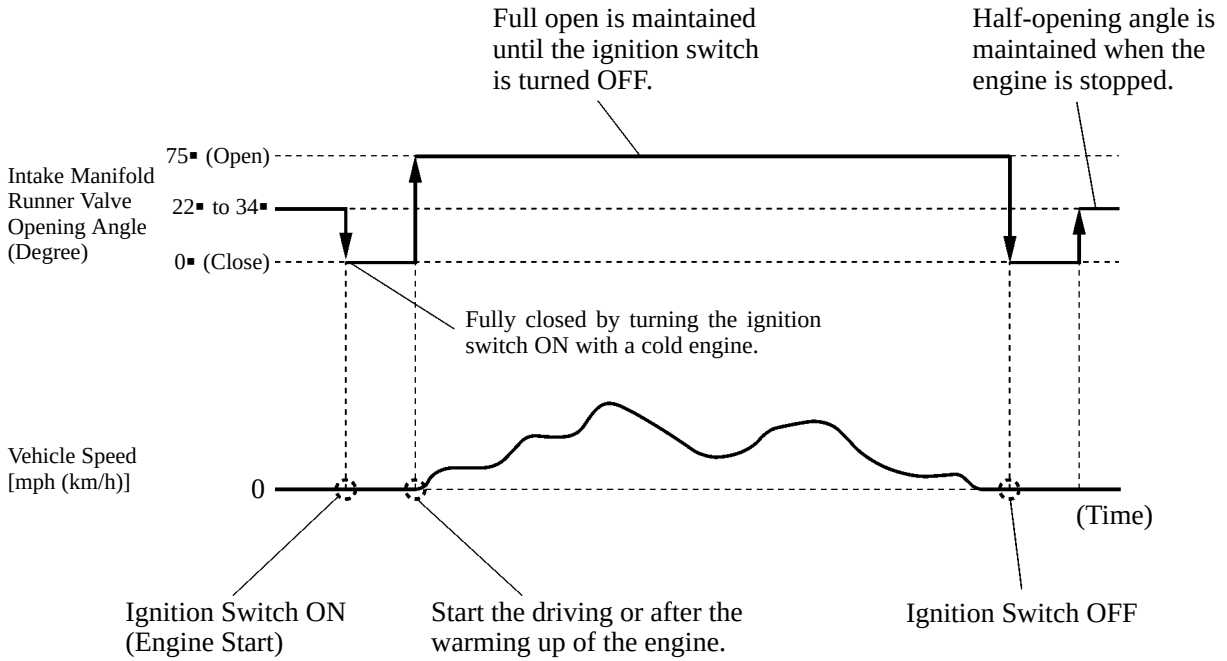

246EG19

9. Fuel Pump Control

A fuel cut control is used to stop the fuel pump once when any of the SRS airbags is deployed. In this system, the airbag deployment signal from the airbag sensor assembly is detected by the ECM, and it turns OFF the circuit opening relay. After the fuel cut control has been activated, turning the ignition switch from OFF to ON cancels the fuel cut control, and the engine can be restarted.

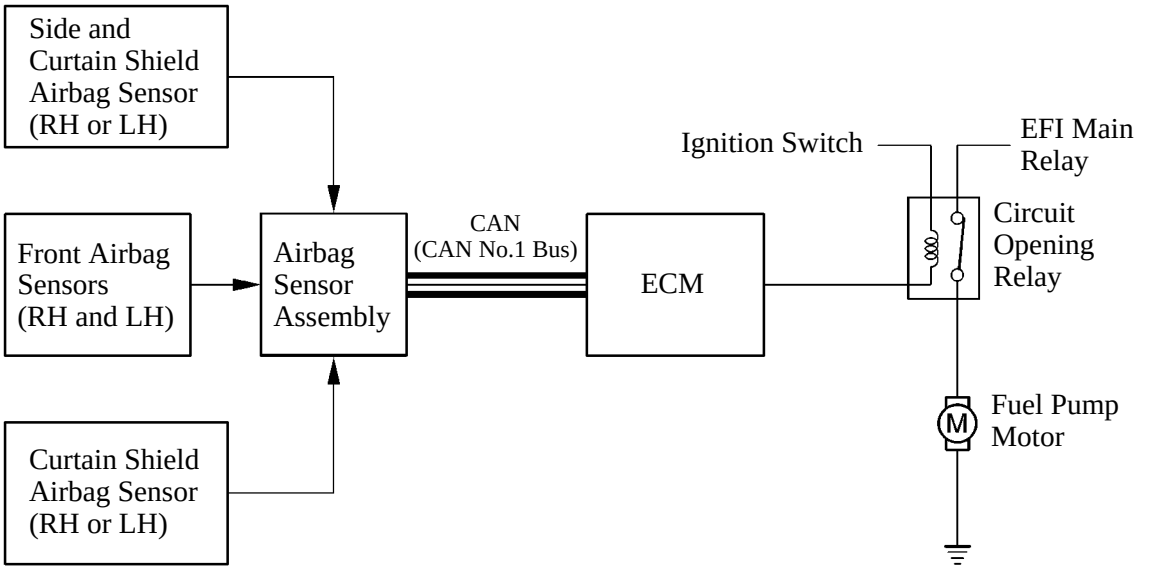

01YEG13TE

10. Cooling Fan Control System

A cooling fan control system in which the ECM controls the cooling fan speed in accordance with the engine coolant temperature and the air conditioning operating condition.

The ECM controls the cooling fan speed based on A/C pressure sensor signals and engine coolant temperature sensor signals. The A/C pressure sensor signals are sent from the A/C ECU to the ECM via the CAN. This control is accomplished by operating the 2 fan motors in 2 stages at low speed (series connection) and high speed (parallel connection).

▶ Wiring Diagram ●

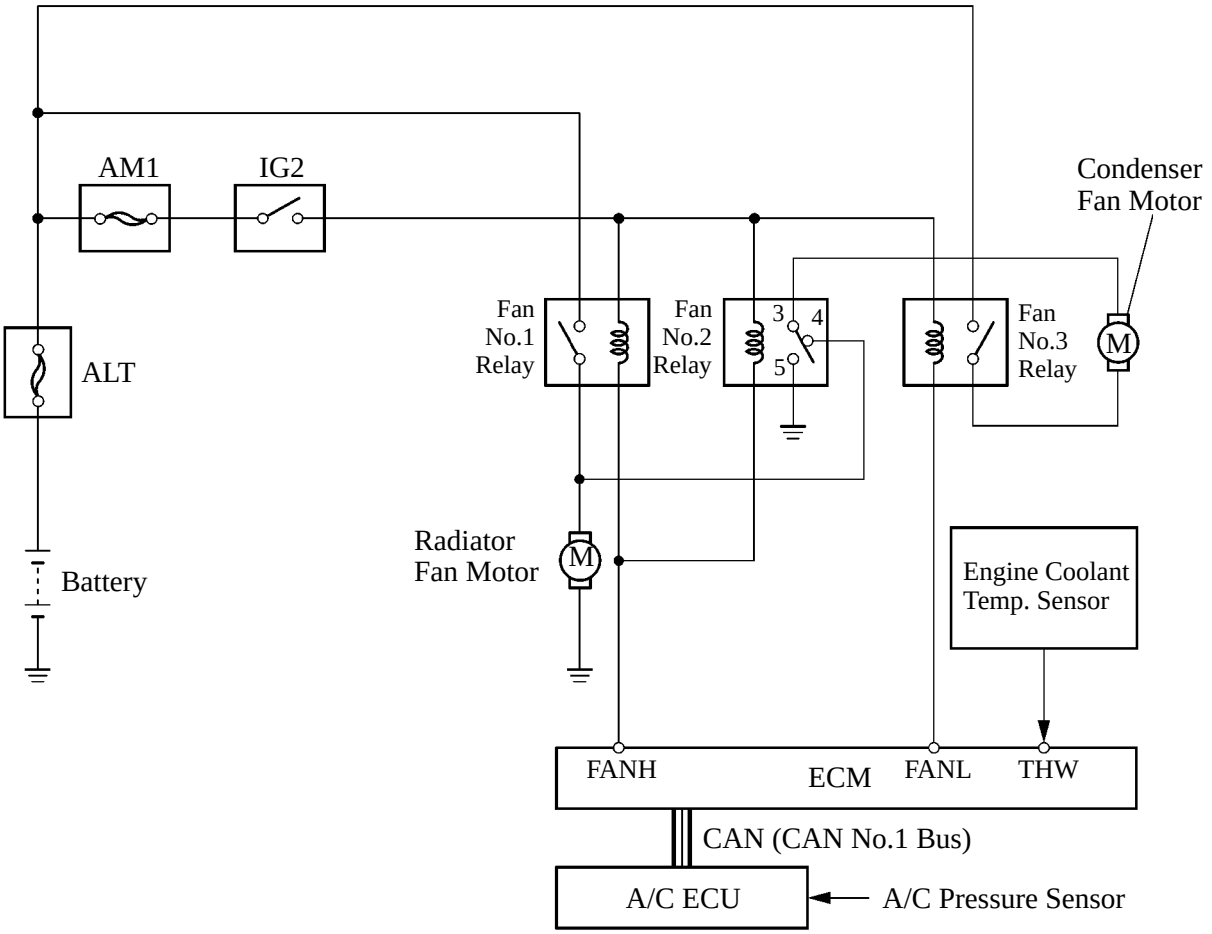

025EG16TE

▶ Cooling Fan Operation ●

Air Conditioning Operating Condition	Engine Coolant Temperature	Relay Operation			Cooling Fan Motor Connection	Cooling Fan Operation
		No.1	No.2	No.3		
OFF	Low	OFF	3 to 4	OFF	OFF	OFF
	High	ON	3 to 5	ON	Parallel	High
A/C Pressure “Low”	Low	OFF	3 to 4	ON	Series	Low
A/C Pressure “High”	Low	ON	3 to 5	ON	Parallel	High
A/C Pressure “Low”	High	ON	3 to 5	ON	Parallel	High
A/C Pressure “High”	High	ON	3 to 5	ON	Parallel	High

11. Evaporative Emission Control System

General

The evaporative emission control system prevents the fuel vapors that are created in the fuel tank from being released directly into the atmosphere.
The canister stores the fuel vapors that have been created in the fuel tank.

The ECM controls the purge VSV in accordance with the driving conditions in order to direct the fuel vapors into the engine, where they are burned.

In this system, the ECM checks for evaporative emission leaks and outputs DTC (Diagnostic Trouble Code) in the event of a malfunction. An evaporative emission leak check consists of an application of vacuum to the evaporative emissions system and monitoring the system for changes in pressure in order to detect a leakage.

This system consists of a purg VSV, canister, refueling valve, canister pump module, and ECM.

An ORVR (Onboard Refueling Vapor Recovery) function is provided in the refueling valve.

The canister pressure sensor has been included to the canister pump module.

An air filter has been provided on the fresh air line. This air filter is maintenance-free.

The EVAP service port has been removed.

The following are the typical conditions necessary to enable an evaporative emission leak check:

Typical Enabling Condition	Five hours have elapsed after the engine has been turned OFF*. Altitude: Below 2400 m (8000 feet) Battery Voltage: 10.5 V or more Ignition switch: OFF Engine Coolant Temperature: 4.4 to 35▪C (40 to 95▪F) Intake Air Temperature: 4.4 to 35▪C (40 to 95▪F)

*: If engine coolant temperature does not drop below 35▪C (95▪F), this time should be extended to 7 hours. Even after that, if the temperature is not less than 35▪C (95▪F), the time should be extended to 9.5 hours.

Service Tip

The canister pump module performs a fuel evaporative emission leakage check. This check is done approximately five hours after the engine is turned off. Sound may be heard coming from underneath the luggage compartment for several minutes. This does not indicate a malfunction.

Pinpoint pressure test procedure is adopted by pressurizing the fresh air line that runs from the canister pump module to the air filler neck. For details, see the 2007 Camry Repair Manual (Pub. No. RM0250U).

System Diagram

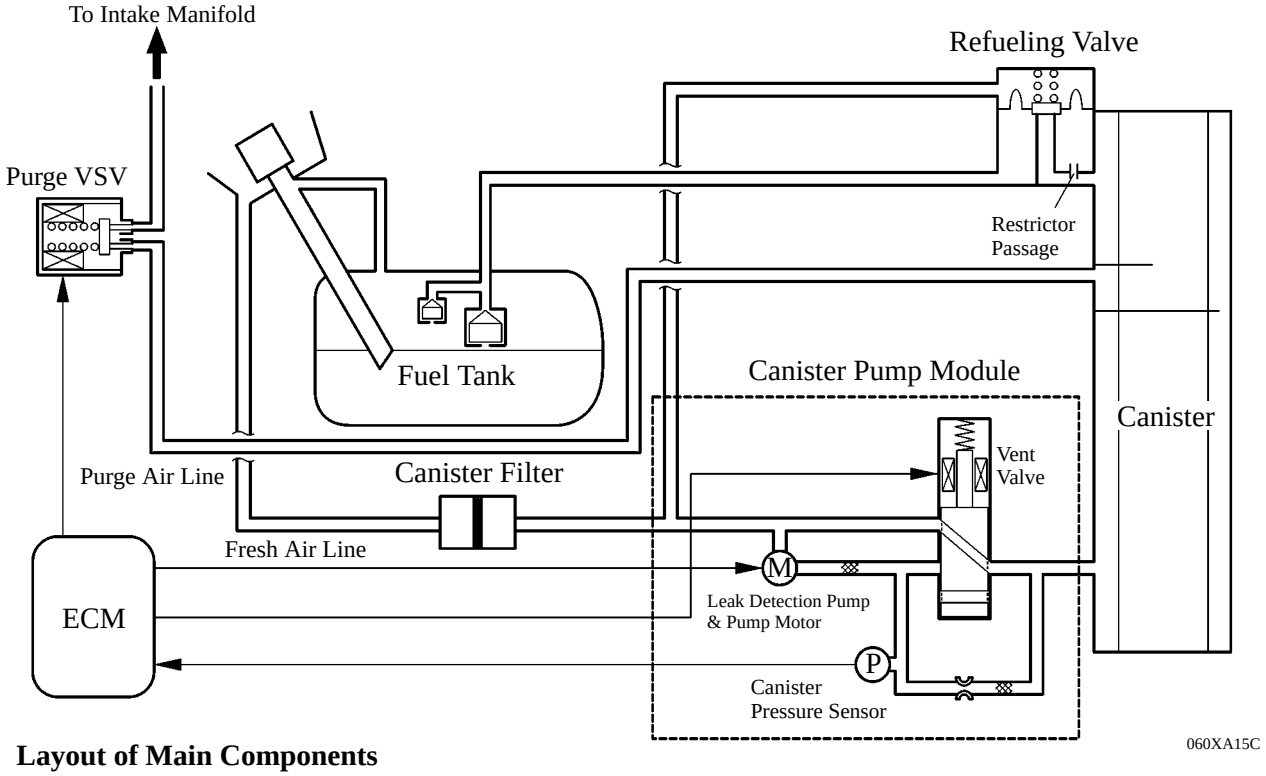

Layout of Main Components

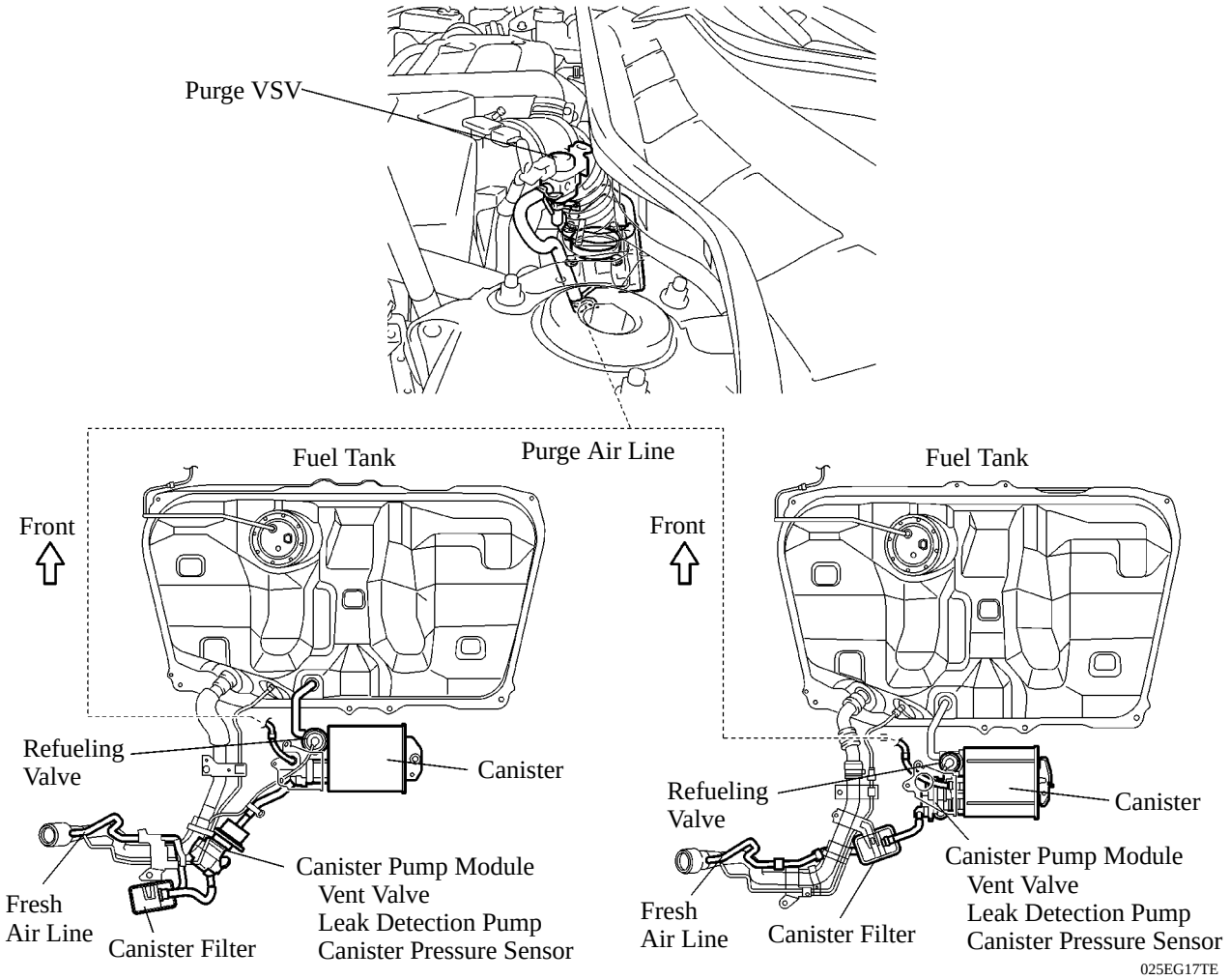

California Package Model **Except California Package Model**

Function of Main Components

Component		Function
Canister		Contains activated charcoal to absorb the fuel vapors that are created in the fuel tank.
Refueling Valve		Controls the flow rate of the fuel vapors from the fuel tank to the canister when the system is purging or during refueling.
	Restrictor Passage	Prevents a large amount of vacuum during purge operation or system monitoring operation from affecting the pressure in the fuel tank.
Fresh Air Line		Fresh air goes into the canister and the cleaned drain air goes out into the atmosphere.
Canister Pump Module	Canister Vent Valve	Opens and closes the fresh air line in accordance with the signals from the ECM.
	Leak Detection Pump & Pump Motor	Applies vacuum pressure to the evaporative emission system in accordance with the signals from the ECM.
	Canister Pressure Sensor	Detects the pressure in the evaporative emission system and sends the signals to the ECM.
Purge VSV		Opens in accordance with the signals from the ECM when the system is purging, in order to send the fuel vapors that were absorbed by the canister into the intake manifold. In system monitoring mode, this valve controls the introduction of the vacuum into the fuel tank.
Canister Filter		Prevents dust and debris in the fresh air from entering the system.
ECM		Controls the canister pump module and the purge VSV in accordance with the signals from various sensors, in order to achieve a purge volume that suits the driving conditions. In addition, the ECM monitors the system for any leakage and outputs a DTC if a malfunction is found.

Construction and Operation

1) Refueling Valve

The refueling valve consists of chamber A, chamber B, and the restrictor passage. A constant atmospheric pressure is applied to chamber A.

During refueling, the internal pressure of the fuel tank increases. This pressure causes the refueling valve to lift up, allowing the fuel vapors to enter the canister.

The restrictor passage prevents the large amount of vacuum that is created during purge operation or system monitoring operation from entering the fuel tank, and limits the flow of the fuel vapors from the fuel tank to the canister. If a large volume of fuel vapors enters the intake manifold, it will affect the air-fuel ratio control of the engine. Therefore, the role of the restrictor passage is to help prevent this from occurring.

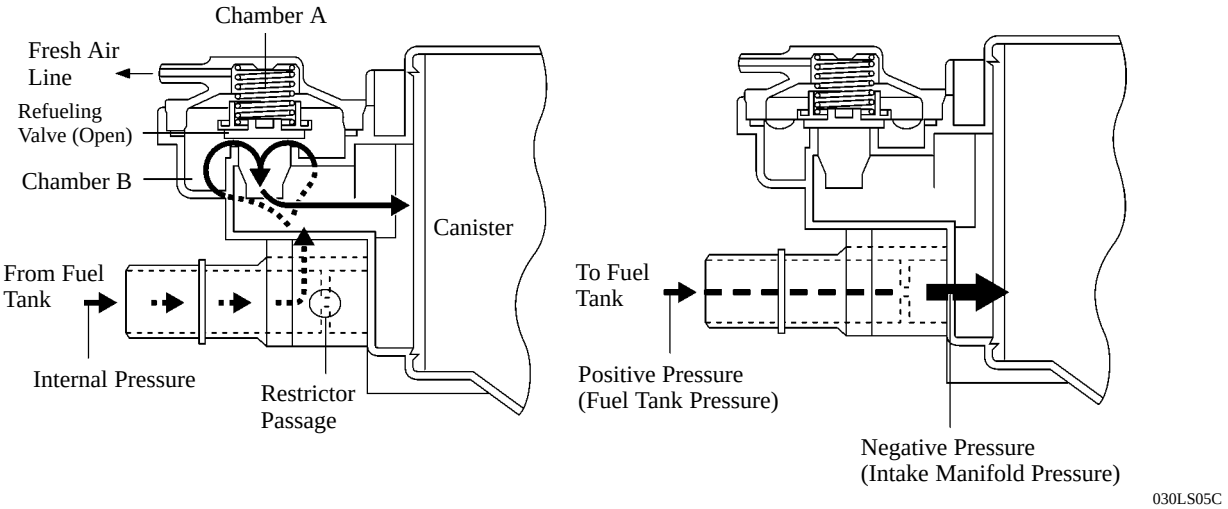

During Refueling

During Purge Operation or System Monitoring Operation

2) Fuel Inlet (Fresh Air Inlet)

In accordance with the change of structure of the evaporative emission control system, the location of the fresh air line inlet has been changed from the air cleaner to the near the fuel inlet. The fresh air from the atmosphere and drain air cleaned by the canister will go in or out of the system through the passages shown below.

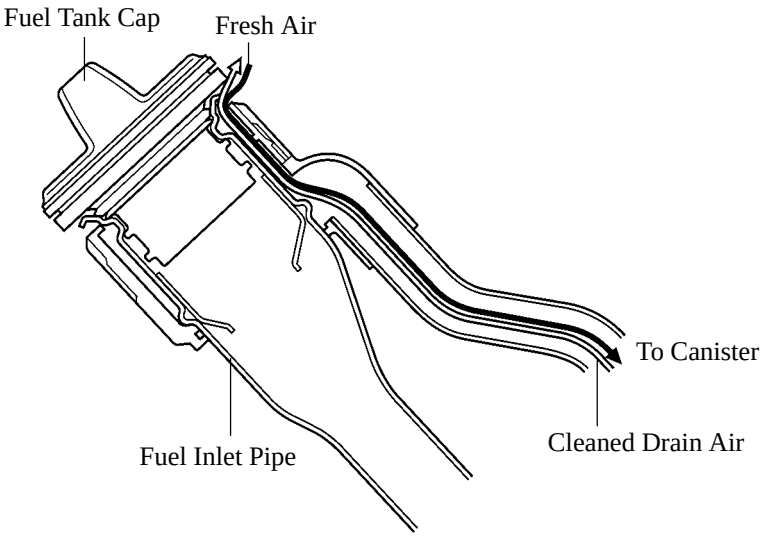

3) Canister Pump module

The canister Pump module consists of the vent valve, canister pressure sensor, leak detection pump and pump motor.

The vent valve switches the passages in accordance with the signals received from the ECM.

A DC type brushless motor is used for the pump motor.

A vane type leak detection pump is used.

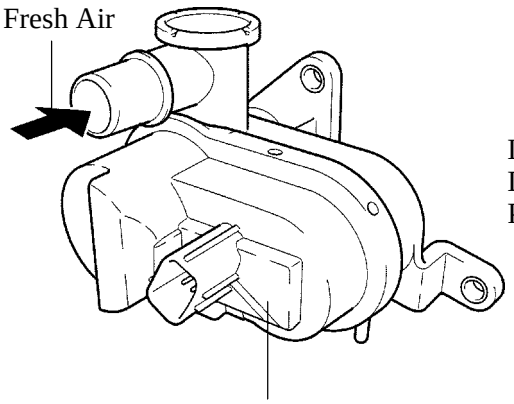

D13N15

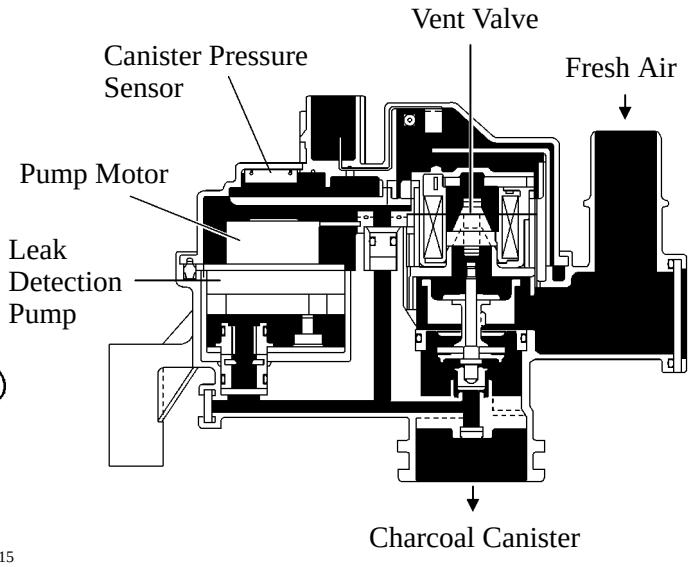

D13N16

▶ Simple Diagram ●

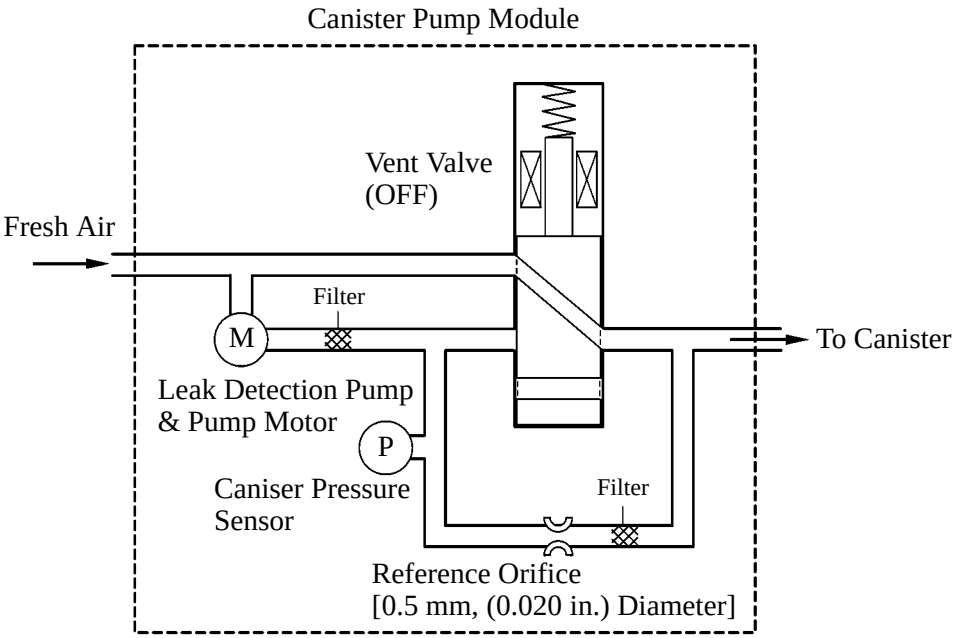

060XA16C

System Operation

1) Purge Flow Control

When the engine has reached predetermined parameters (closed loop, engine coolant temp. above 80▪C (176▪F), etc), stored fuel vapors are purged from the canister whenever the purge VSV is opened by the ECM.

The ECM will change the duty ratio cycle of the purge VSV, thus controlling purge flow volume. Purge flow volume is determined by intake manifold pressure and the duty ratio cycle of the purge VSV. Atmospheric pressure is allowed into the canister to ensure that purge flow is constantly maintained whenever purge vacuum is applied to the canister.

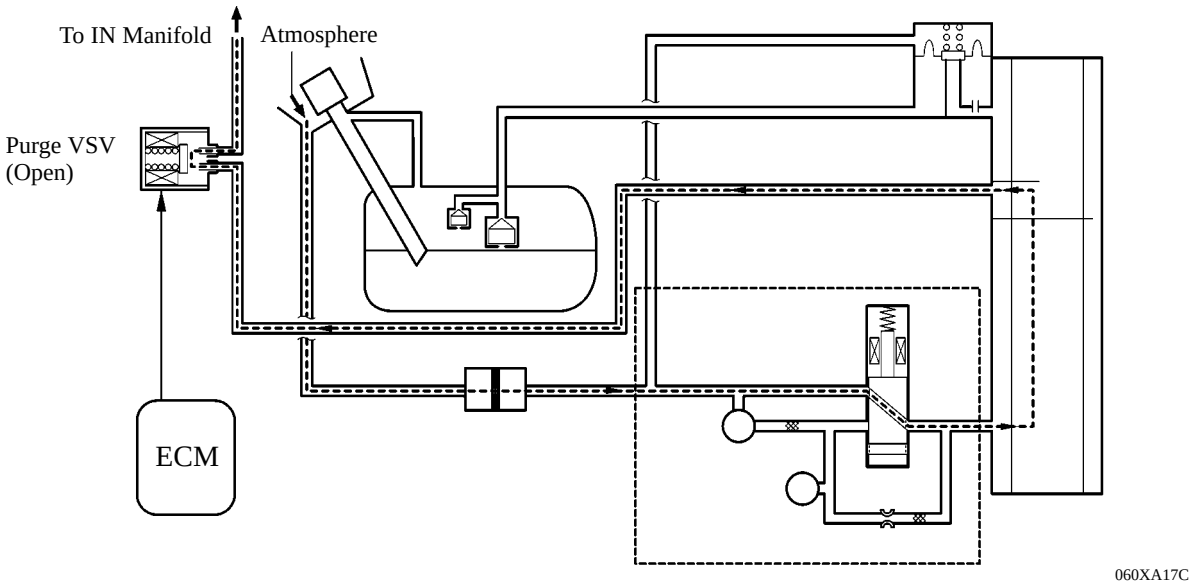

2) ORVR (On-Board Refueling Vapor Recovery)

When the internal pressure of the fuel tank increases during refueling, this pressure causes the diaphragm in the refueling valve to lift up, allowing the fuel vapors to enter the canister. The air that has had the fuel vapors removed from it will be discharged through the fresh air line. The vent valve is used to open and close the fresh air line, and it is always open (even when the engine is stopped) except when the vehicle is in monitoring mode (the valve will be open as long as the vehicle is not in monitoring mode). If the vehicle is refueled in system monitoring mode, the ECM will recognize the refueling by way of the canister pressure sensor, which detects the sudden pressure increase in the fuel tank, and the ECM will open the vent valve.

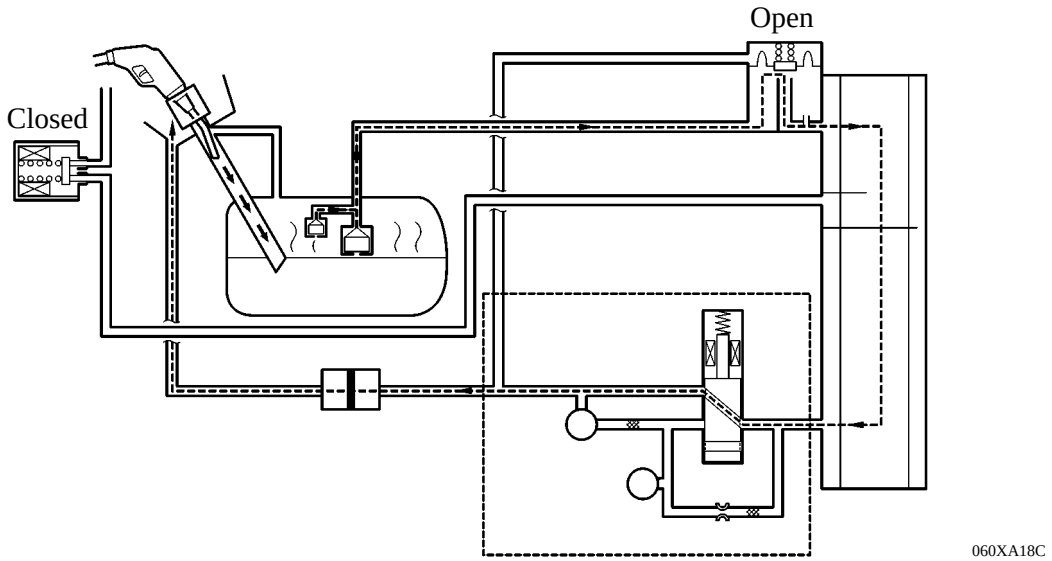

3) EVAP Leak Check

a. General

The EVAP leak check operates in accordance with the following timing chart:

▶ Timing Chart ◀

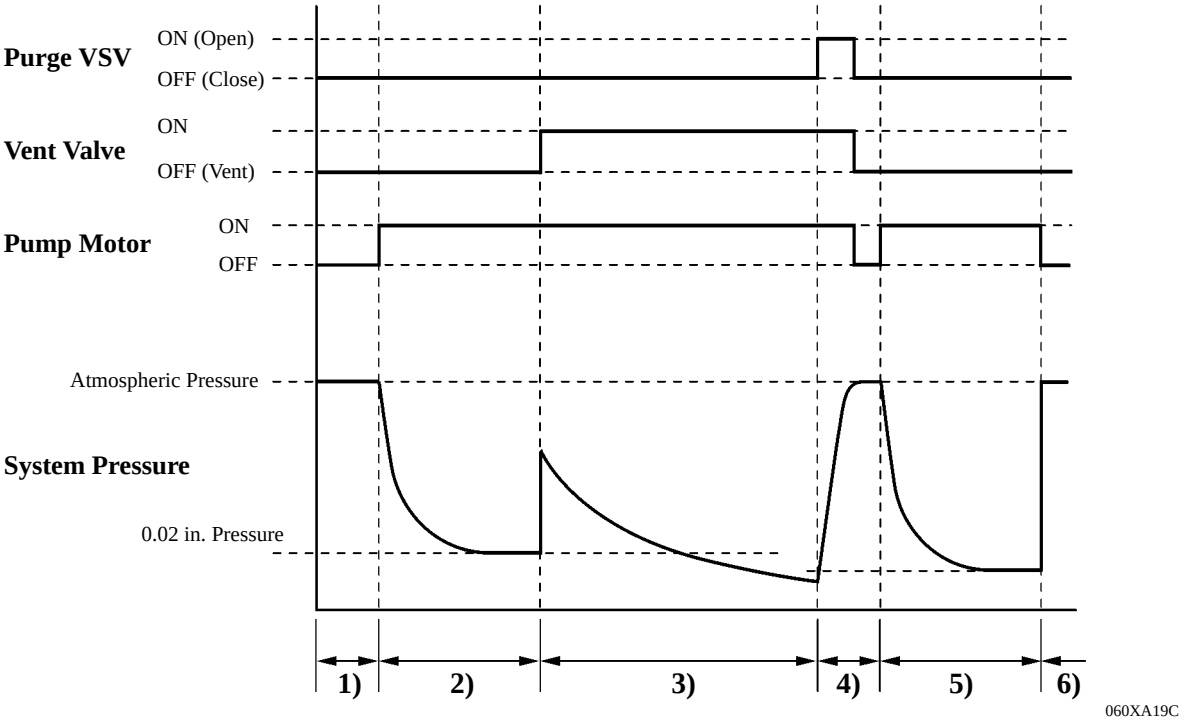

Order	Operation	Description	Time
1)	Atmospheric Pressure Measurement	The ECM turns the vent valve OFF (vent) and measures EVAP system pressure to memorize the atmospheric pressure.	—
2)	0.02 in. Leak Pressure Measurement	The leak detection pump creates negative pressure (vacuum) through a 0.02 in. orifice and the pressure is measured. The ECM determines this as the 0.02 in. leak pressure.	20 sec.
3)	EVAP Leak Check	The leak detection pump creates negative pressure (vacuum) in the EVAP system and the EVAP system pressure is measured. If the stabilized pressure is larger than the 0.02 in. leak pressure, ECM determines that the EVAP system has a leak. If the EVAP pressure does not stabilize within 15 minutes, the ECM cancels EVAP monitor.	Within 15 min.
4)	Purge VSV Monitor	The ECM opens the purge VSV and measures the EVAP pressure increase. If the increase is large, the ECM interprets this as normal.	10 sec.
5)	Repeat 0.02 in. Leak Pressure Measurement	The leak detection pump creates negative pressure (vacuum) through the 0.02 in. orifice and the pressure is measured. The ECM determines this as the 0.02 in. leak pressure.	20 sec.
6)	Final Check	The ECM measures the atmospheric pressure and records the monitor result.	—

b. Atmospheric Pressure Measurement

1) When the ignition switch is turned OFF, the purge VSV and the vent valve are turned OFF. Therefore, atmospheric pressure is introduced into the canister.
2) The ECM measures the atmospheric pressure based on the signals provided by the canister pressure sensor.
3) If the measurement value is out of standards, the ECM actuates the leak detection pump in order to monitor the changes in the pressure.

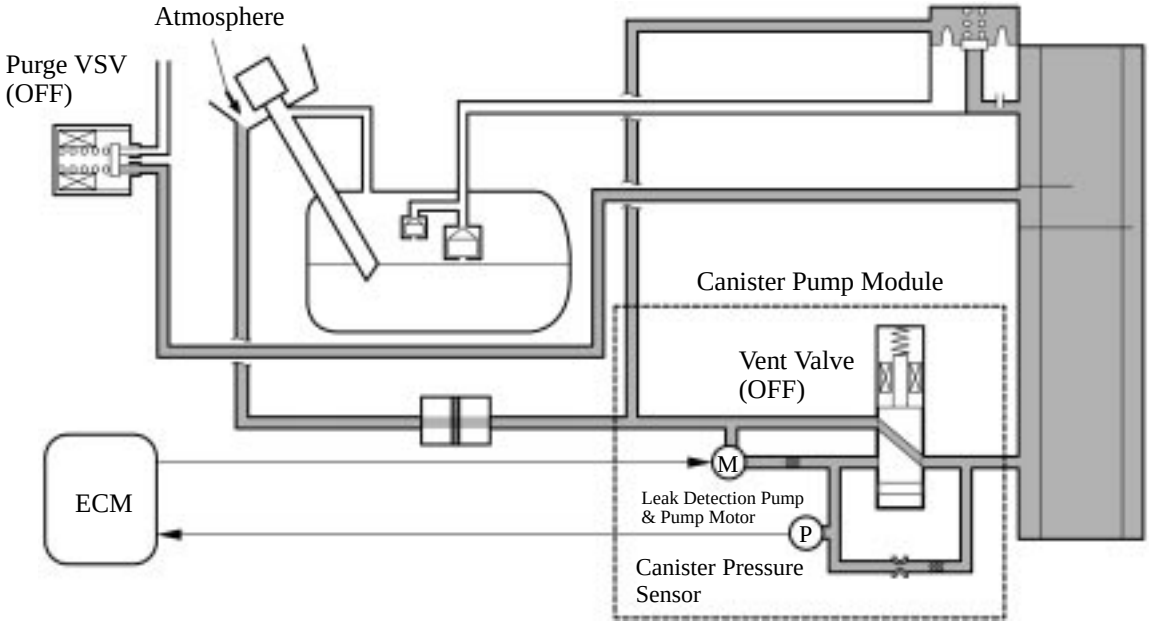

060XA20C

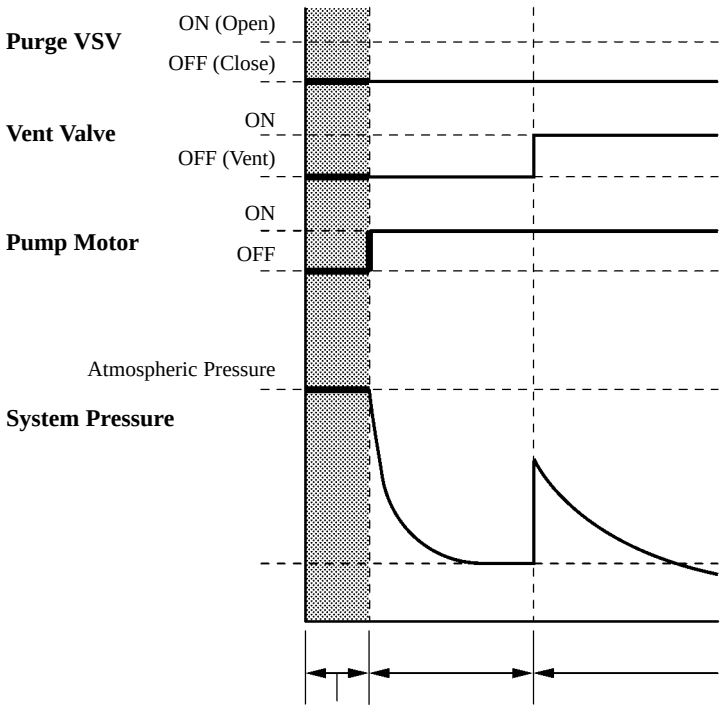

Atmospheric Pressure Measurement

D13N22

c. 0.02 in. Leak Pressure Measurement

1) The vent valve remains off, and the ECM introduces atmospheric pressure into the canister and actuates the leak detection pump in order to create a negative pressure.
2) At this time, the pressure will not decrease beyond a 0.02 in. pressure due to the atmospheric pressure that enters through a 0.02 in. diameter reference orifice.
3) The ECM compares the logic value and this pressure, and stores it as a 0.02 in. leak pressure in its memory.
4) If the measurement value is below the standard, the ECM will determine that the reference orifice is clogged and store DTC (Diagnostic Trouble Code) P043E in its memory.
5) If the measurement value is above the standard, the ECM will determine that a high flow rate pressure is passing through the reference orifice and store DTC (Diagnostic Trouble Code) P043F, P2401 and P2402 in its memory.

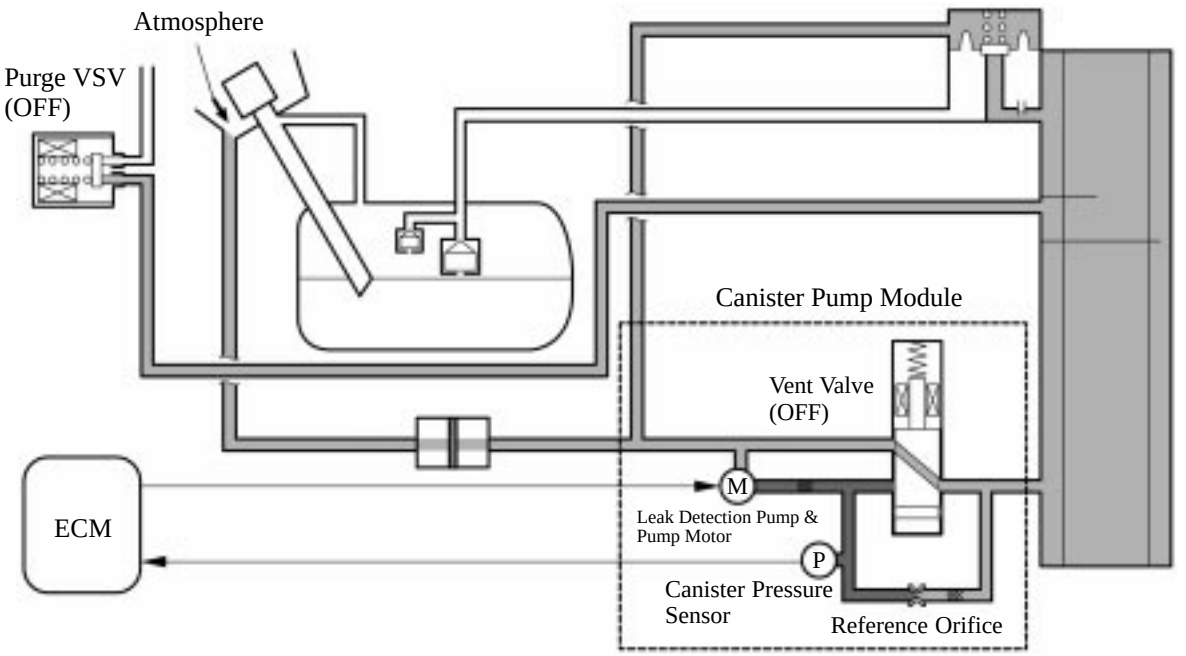

060XA21C

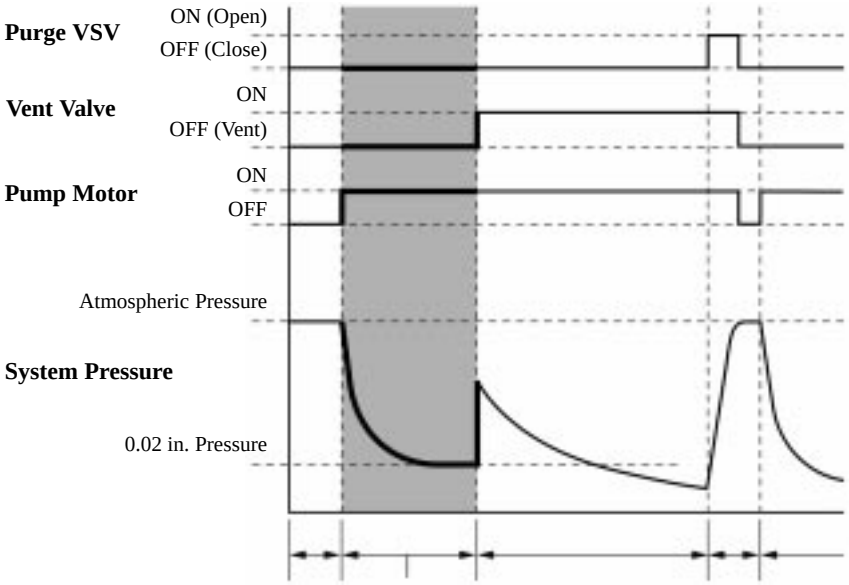

0.02 in. Pressure Measurement

060XA22C

d. EVAP Leak Check

1) While actuating the leak detection pump, the ECM turns ON the vent valve in order to introduce a vacuum into the canister.
2) When the pressure in the system stabilizes, the ECM compares this pressure and the 0.02 in. pressure in order to check for a leakage.
3) If the detection value is below the 0.02 in. pressure, the ECM determines that there is no leakage.
4) If the detection value is above the 0.02 in. pressure and near atmospheric pressure, the ECM determines that there is a gross leakage (large hole) and stores DTC P0455 in its memory.
5) If the detection value is above the 0.02 in. pressure, the ECM determines that there is a small leakage and stores DTC P0456 in its memory.

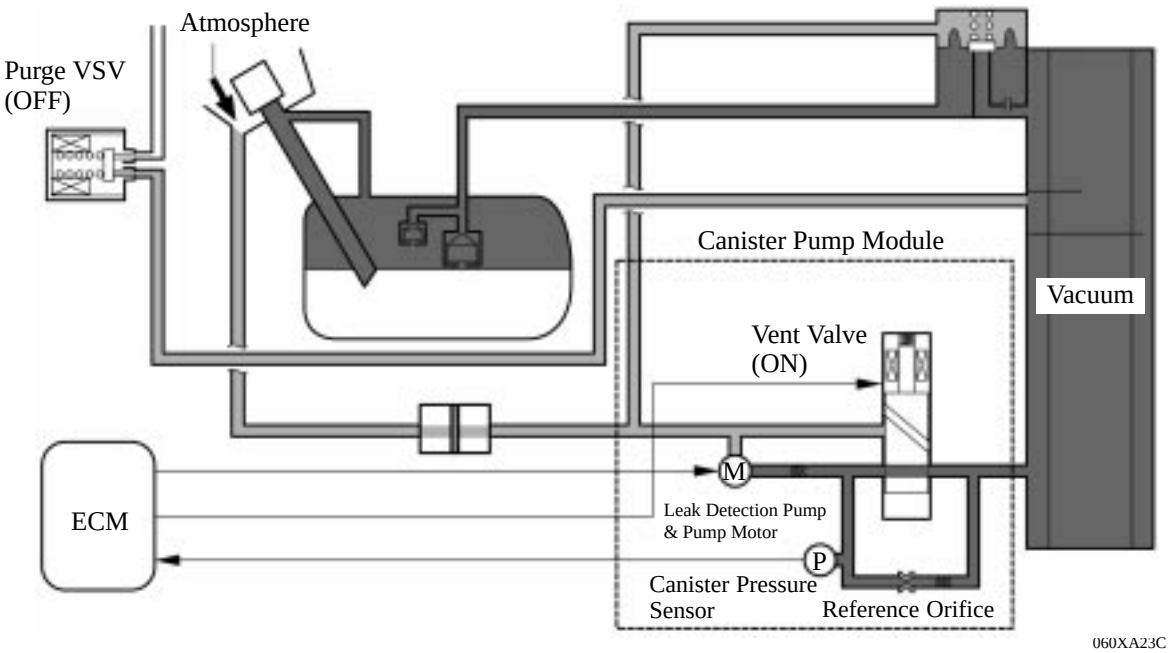

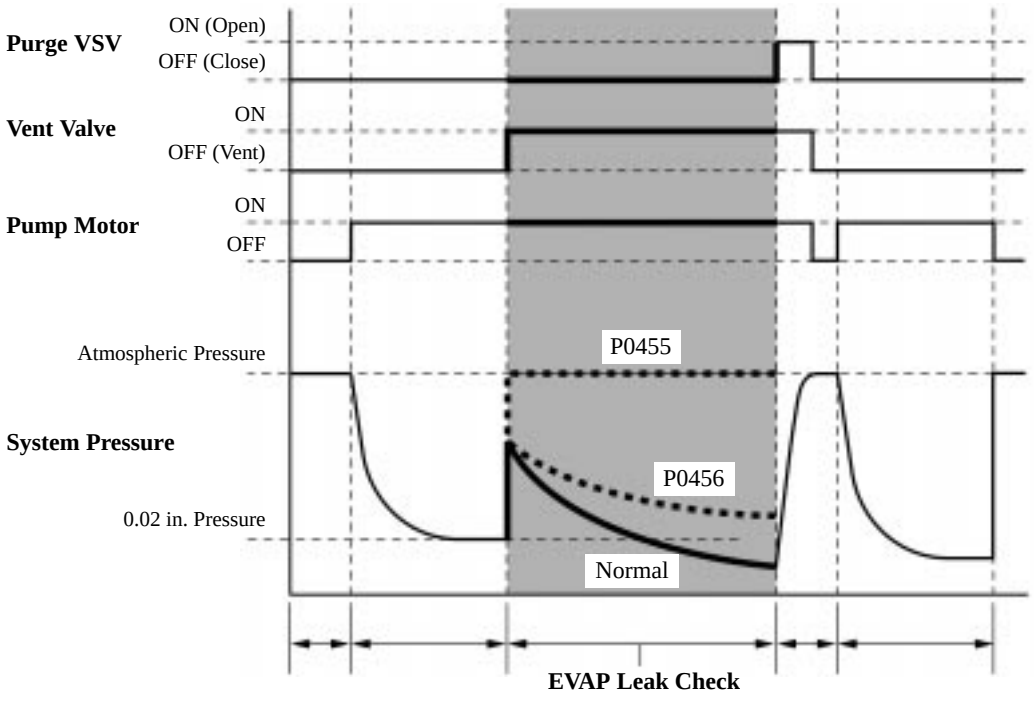

e. Purge VSV Monitor

1) After completing an EVAP leak check, the ECM turns ON (open) the purge VSV with the leak detection pump actuated, and introduces the atmospheric pressure from the intake manifold to the canister.
2) If the pressure change at this time is within the normal range, the ECM determines the condition to be normal.
3) If the pressure is out of the normal range, the ECM will stop the purge VSV monitor and store DTC P0441 in its memory.

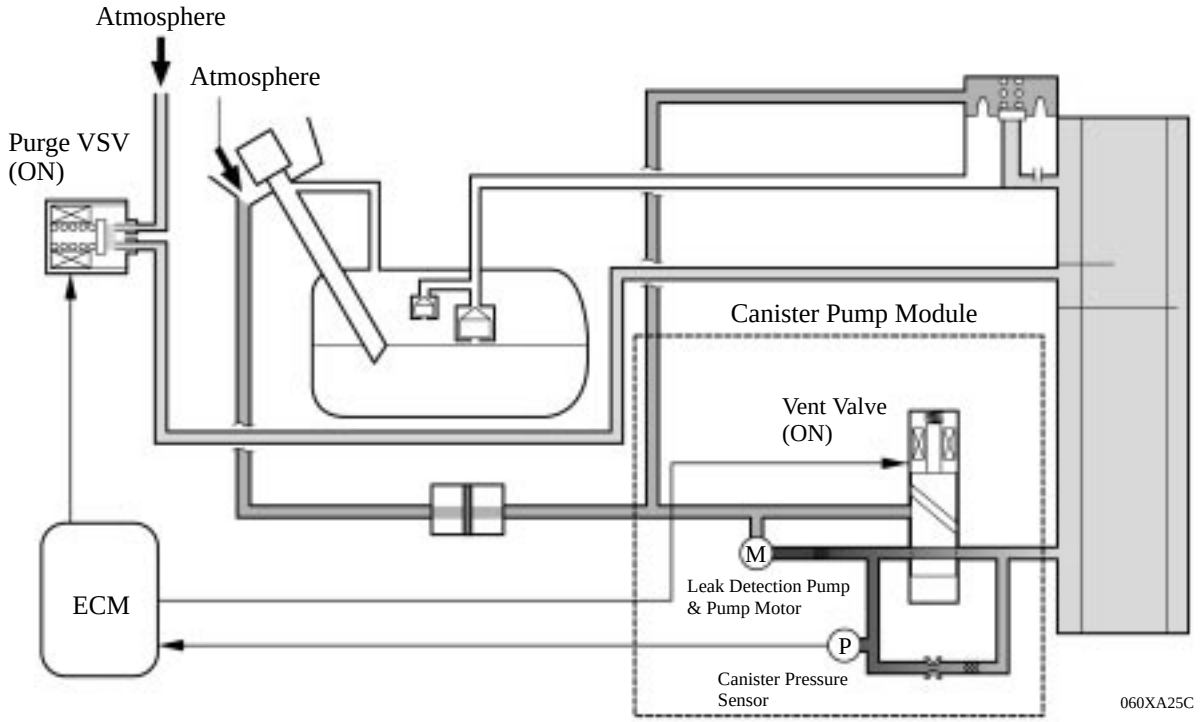

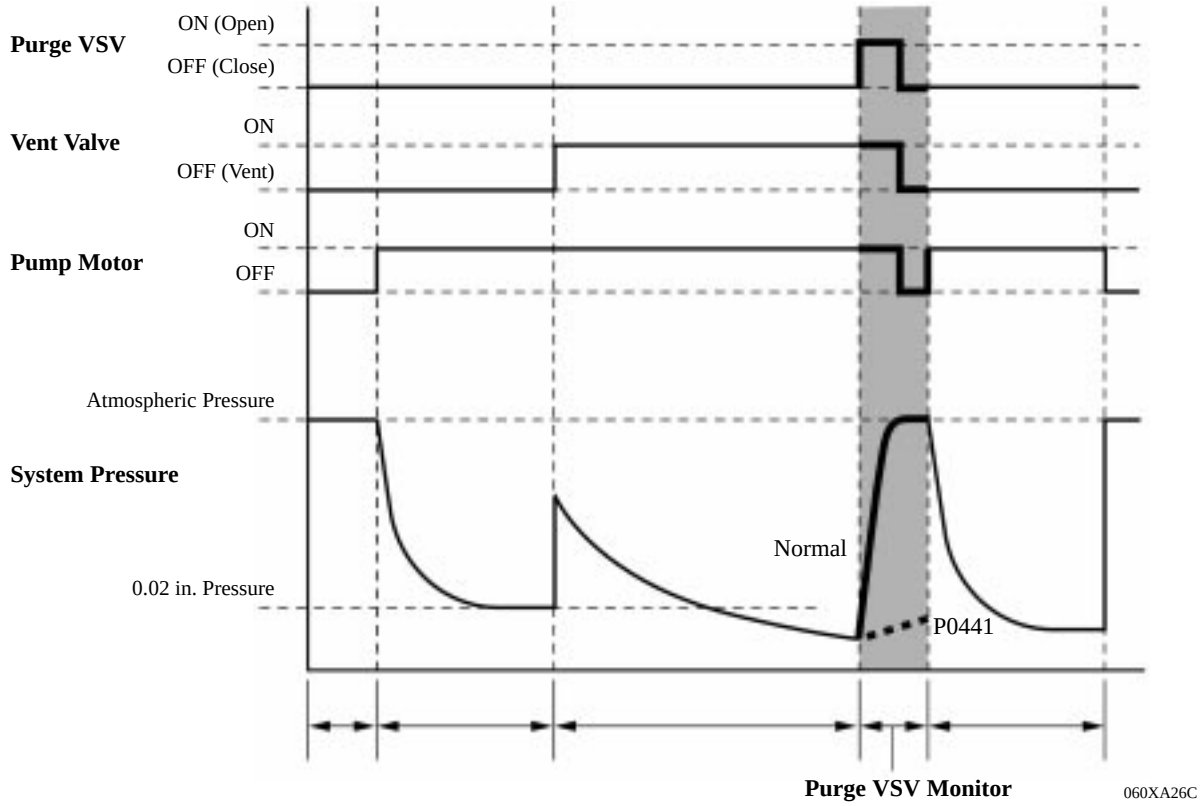

f. Repeat 0.02 in. Leak Pressure Measurement

1) While the ECM operates the leak detection pump, the purge VSV and vent valve turns off and a repeat 0.02 in. leak pressure measurement is performed.
2) The ECM compares the measured pressure with the pressure during EVAP leak check.
3) If the pressure during the EVAP leak check is below the measured value, the ECM determines that there is no leakage.
4) If the pressure during the EVAP leak check is above the measured value, the ECM determines that there is a small leak and stores DTC P0456 in its memory.

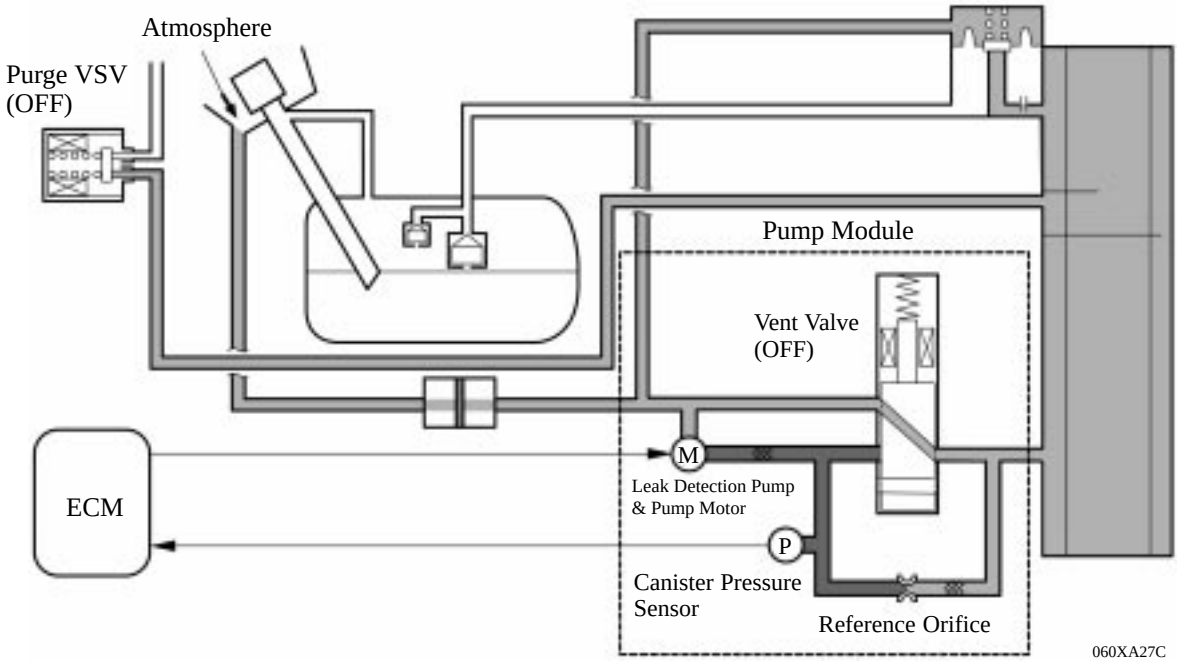

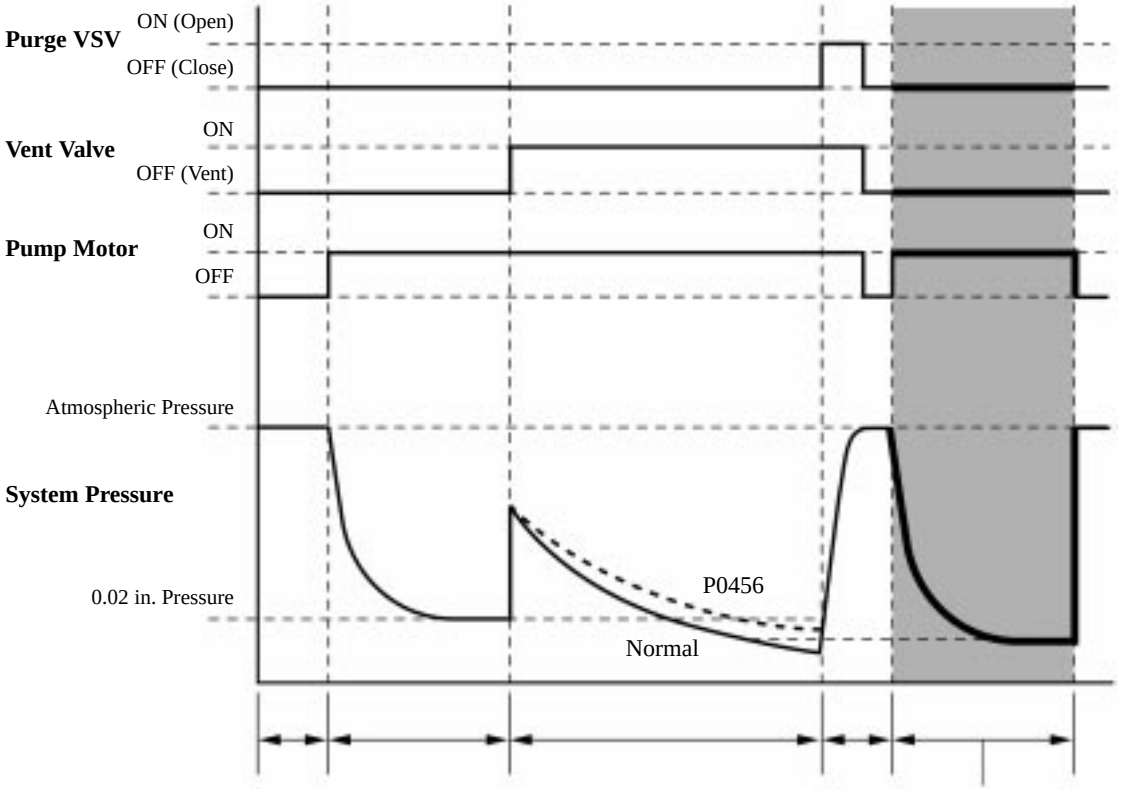

Repeat 0.02 in. Pressure Measurement

060XA28C

12. Diagnosis

▶ When the ECM detects a malfunction, the ECM makes a diagnosis and memorizes the failed section. Furthermore, the MIL (Malfunction Indicator Lamp) in the combination meter illuminates or blinks to inform the driver.

▶ The ECM will also store the DTC (Diagnostic Trouble Code) of the malfunctions. The DTC can be accessed by using the hand-held tester.

▶ For details, see the 2007 Camry Repair Manual (Pub. No. RM0250U).

Service Tip

▶ The ECM of the ’07 Camry uses the CAN protocol for diagnostic communication. Therefore, a hand-held tester and a dedicated adapter [CAN VIM (Vehicle Interface Module)] are required for accessing diagnostic data. For details, see the 2007 Camry Repair Manual (Pub. No. RM0250U).

▶ To clear the DTC that is stored in the ECM, use a hand-held tester, disconnect the battery terminal or remove the EFI No.1 fuse and ETCS fuse for 1 minute or longer.

13. Fail-Safe

When the ECM detects a malfunction, the ECM stops or controls the engine according to the date already stored in the memory.

▶ Fail-Safe Chart ●

DTC No.	Fail-Safe Operation	Fail-Safe Deactivation Conditions
P0031, P0032, P0037, P0038	The heater circuit in which an abnormality is detected is turned off.	Ignition switch OFF.
P0100, P0102, P0103	Ignition timing is calculated from an engine speed and a throttle angle.	Return to normal condition.
P0110, P0112, P0113	Intake air temp. is fixed at 20▪C (68▪F).	Return to normal condition.
P0115, P0117, P0118	Engine coolant temp. is fixed at 80▪C (176▪F).	Return to normal condition.
P0120, P0122, P0123, P0220, P0222, P0223, P2135	Fuel cut intermittently when idle.	Return to normal condition and ignition switch OFF.
P0121	Fuel cut intermittently when idle.	Return to normal condition and ignition switch OFF.
P0327, P0328	Max. timing retardation.	Ignition switch OFF.
P0351, P0352, P0353, P0354	Fuel cut.	Return to normal condition.
P2102, P2103	Fuel cut intermittently when idle.	Return to normal condition and ignition switch OFF.
P2111, P2112	Fuel cut intermittently when idle.	Return to normal condition and ignition switch OFF.
P2119	Fuel cut intermittently when idle.	Return to normal condition and ignition switch OFF.

Fail-safe of Accelerator Pedal Position Sensor

The accelerator pedal position sensor comprises two (Main, Sub) sensor circuits.

If a malfunction occurs in either of the sensor circuits, the ECM detects the abnormal signal voltage difference between these two sensor circuits and switches into the limp mode. In the limp mode, the remaining circuit is used to calculate the accelerator pedal opening, in order to operate the vehicle under limp mode control.

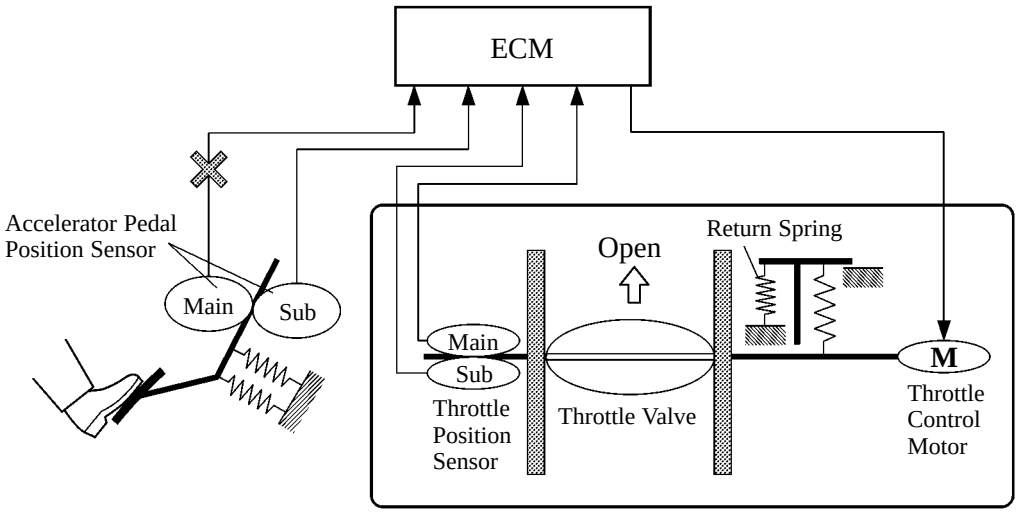

Throttle Body

D13N08

If both circuits malfunction, the ECM detects the abnormal signal voltage from these two sensor circuits and discontinues the throttle control. At this time, the vehicle can be driven within its idling range.

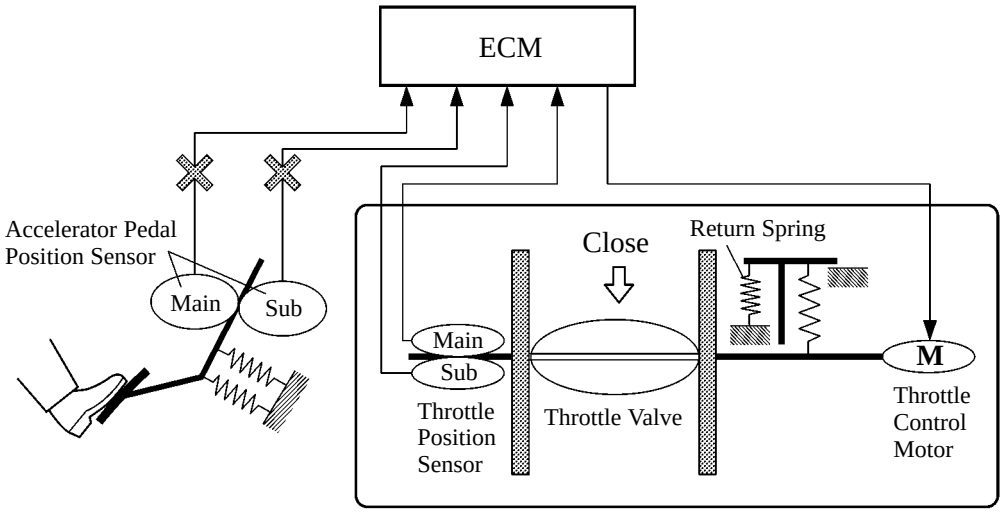

Throttle Body

D13N09

Fail-safe of Throttle Position Sensor

The throttle position sensor comprises two (Main, Sub) sensor circuits.

If a malfunction occurs in either of the sensor circuits, the ECM detects the abnormal signal voltage difference between these two sensor circuits, cuts off the current to the throttle control motor, and switches to the limp mode.

Then, the force of the return spring causes the throttle valve to return and stay at the prescribed opening. At this time, the vehicle can be driven in limp mode while the engine output is regulated through the control of the fuel injection and ignition timing in accordance with the accelerator opening.

The same control as above is effected if the ECM detects a malfunction in the throttle control motor system.

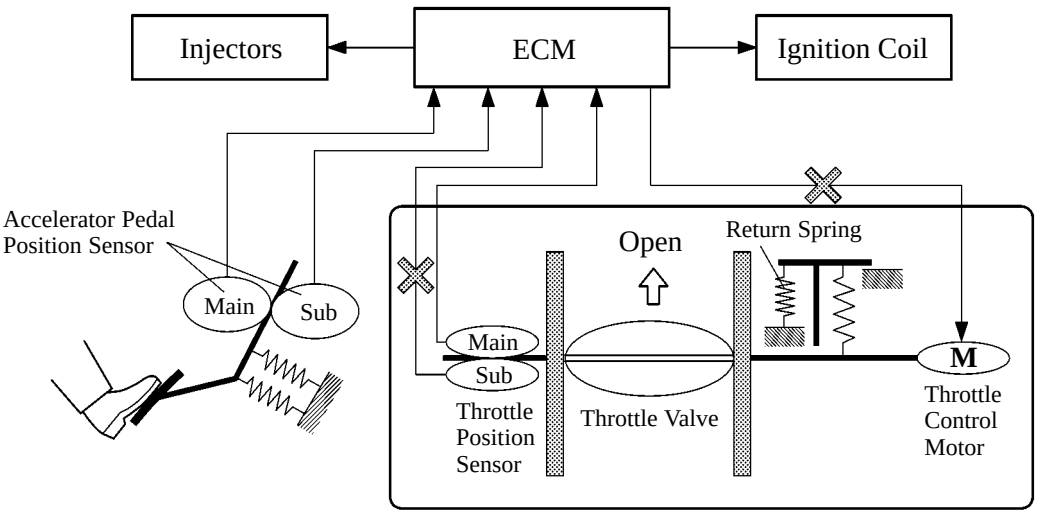

Throttle Body

D13N10

2GR-FE ENGINE

DESCRIPTION

The 2GR-FE engine on the ’07 Camry is a newly developed, V6 3.5-liter, 24-valve DOHC engine. This engine uses the Dual VVT-i (Dual Variable Valve Timing-intelligent) system, DIS (Direct Ignition System), ACIS (Acoustic Control Induction System), and ETCS-i (Electronic Throttle Control System-intelligent). These control functions achieve improved engine performance, fuel economy, and reduced exhaust emissions.

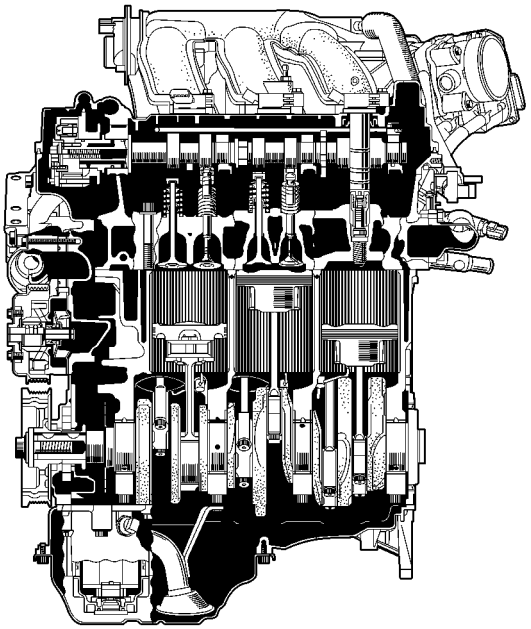

285EG01

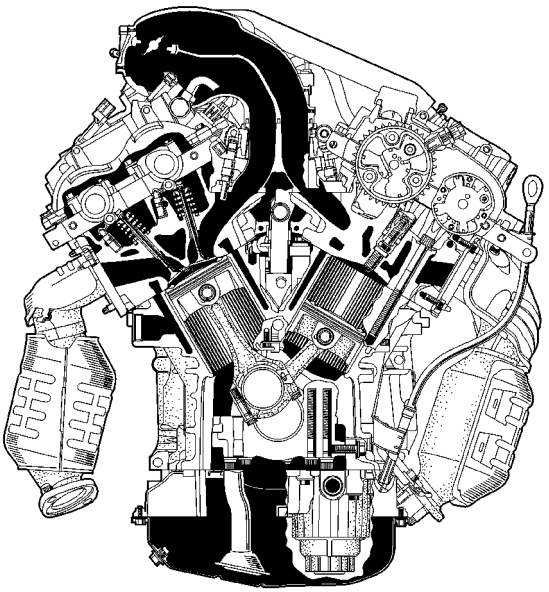

285EG02

▶ Engine Specifications ●

No. of Cyls. & Arrangement			6-Cylinder, V Type
Valve Mechanism			24-Valve DOHC, Chain Drive (with Dual VVT-i)
Combustion Chamber			Pentroof Type
Manifolds			Parallel-Flow
Fuel System			SFI
Ignition System			DIS
Displacement cm^3 (cu. in.)			3456 (210.9)
Bore x Stroke mm (in.)			94.0 x 83.0 (3.70 x 3.27)
Compression Ratio			10.8 : 1
Max. Output (SAE-NET)*1			200 kW @ 6200 rpm (268HP @ 6200 rpm)
Max. Torque (SAE-NET)*1			336 N·m @ 4700 rpm (248 ft·lbf @ 4700 rpm)
Valve Timing	Intake	Open	-3▪ to 37▪ BTDC
		Close	71▪ to 31▪ ABDC
	Exhaust	Open	60▪ to 25▪ BBDC
		Close	4▪ to 39▪ ATDC
Firing Order			1 - 2 - 3 - 4 - 5 - 6
Oil Grade			ILSAC
Octane Rating			87 or more
Emission Regulation	Tailpipe		LEVII- ULEV, SFTP
	Evaporative		LEVII, ORVR
Engine Service Mass*2 (Reference) kg (lb)			163 (359)

*1: Maximum output and torque rating is determined by revised SAE J1394 standard.
*2: Weight shows the figure with the oil and engine coolant fully filled.

▶ Valve Timing ●

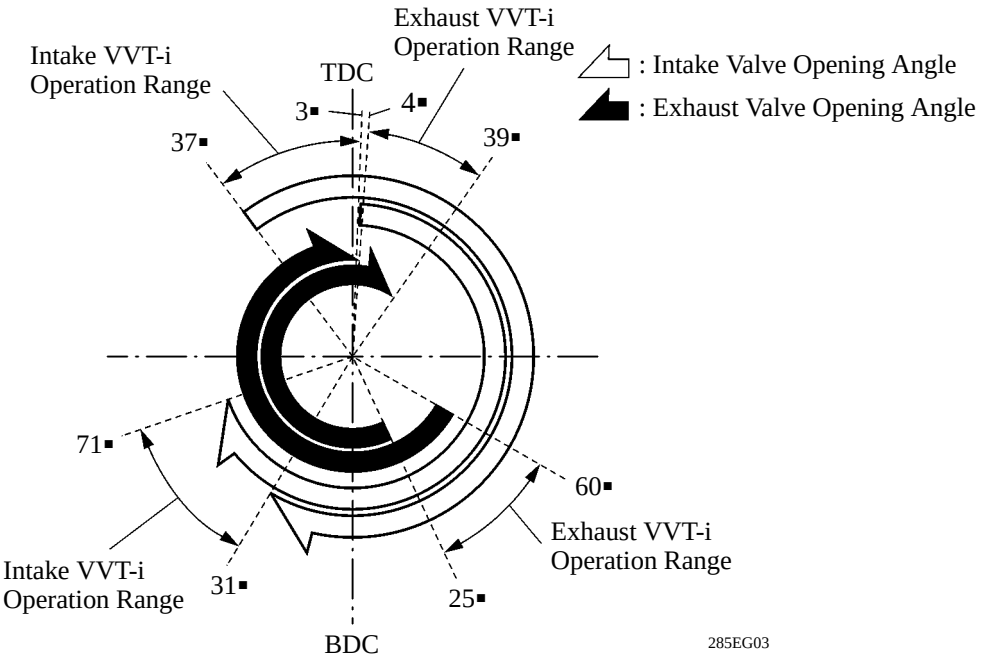

▶FEATURES OF 2GR-FE ENGINE

The 2GR-FE engine has achieved the following performance through the use of the items listed below.

(1) High performance and reliability
(2) Low noise and vibration
(3) Lightweight and compact design
(4) Good serviceability
(5) Clean emission and fuel economy

Item		(1)	(2)	(3)	(4)	(5)
Engine Proper	A steel laminate type cylinder head gasket is used.	●				
	An upright intake port is used.	●		●		
	A taper squish shape is used for combustion chamber.	●				●
	A cylinder block made of aluminum alloy is used.			●		
	The skirt portion of the piston is applied with resin plating to reduce friction.	●	●			●
	An oil pan No.1 made of aluminum alloy is used.		●	●		
Valve Mechanism	The Dual VVT-i (Variable Valve Timing-intelligent) system is used.	●				●
	A hydraulic lash adjuster is used.	●	●		●	
	A timing chain and chain tensioner are used.		●	●	●	
	Roller rocker arms are used.	●				●
Lubrication System	An oil filter with a replaceable element is used.				●	
Cooling System	The engine coolant is used the TOYOTA Genuine SLLC (Super Long Life Coolant).				●	
Intake and Exhaust System	The link-less type throttle body is used.			●	●	
	The intake air chamber made of plastic is used.			●		
	A stainless steel exhaust manifold is used.			●		●
	A ceramic type TWC (Three-Way Catalytic Converter) is used.					●
Fuel System	The fuel delivery pipe made of plastic is used.			●		
	A compact 12-hole type injector is used.	●				●
	Quick connectors are used to connect the fuel hose with the fuel pipe.				●	
Ignition System	The DIS (Direct Ignition System) makes ignition timing adjustment unnecessary.	●			●	●
	The long-reach type spark plugs are used.	●				
Charging System	A segment conductor type generator is used.	●		●		
	A generator pulley with a clutch is used.					●
Starting System	The PS (Planetary reduction-Segment conductor motor) type starter is used.			●		

(Continued)

Item		(1)	(2)	(3)	(4)	(5)
Engine Mount	An active control engine mount is used.		●			
Serpentine Belt Drive System	A serpentine belt drive system is used.			●	●	
Engine Control System	The MRE (Magnetic Resistance Element) type VVT sensors are used.	●				
	The ETCS-i (Electronic Throttle Control System-intelligent) is used.	●				●
	The ACIS (Acoustic Control Induction System) is used.	●				●
	The cranking holding function is used.	●				
	The air intake control system is used.	●	●			
	Evaporative emission control system is used.					●

●ENGINE PROPER

1. Cylinder Head Cover

▶Lightweight yet high-strength aluminum cylinder head covers are used.

▶An oil delivery pipe is installed inside the cylinder head cover. This ensures lubrication to the sliding parts of the roller rocker arm, improving reliability.

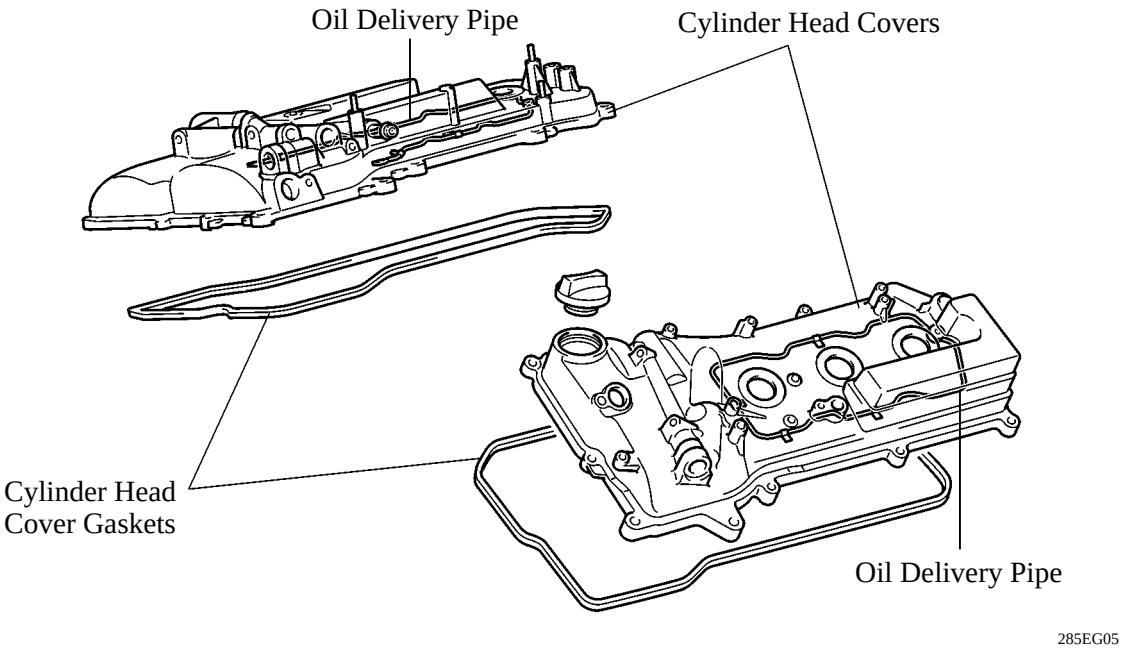

2. Cylinder Head Gasket

A steel-laminate type cylinder head gasket is used. A shim is used around the cylinder bore of the gasket to help enhance sealing performance and durability.

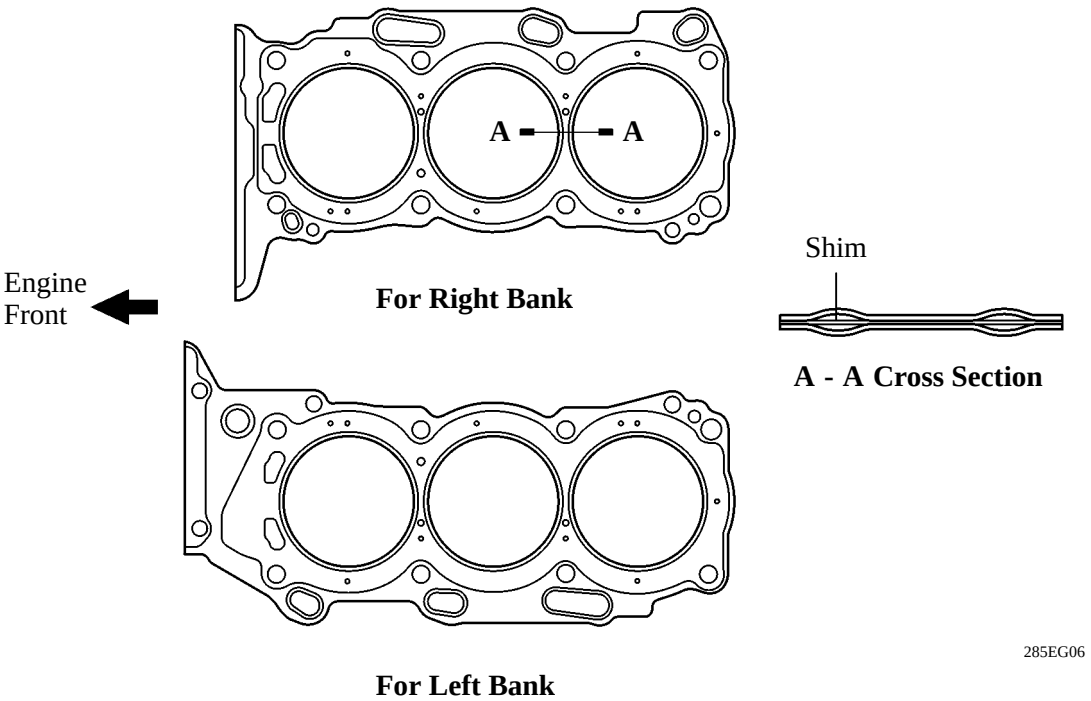

3. Cylinder Head

▶ The cylinder head structure has been simplified by separating the cam journal portion (camshaft housing) from the cylinder head.

▶ The cylinder head, which is made of aluminum, contains a pentroof-type combustion chamber. The spark plug is located in the center of the combustion chamber in order to improve the engine's anti-knocking performance.

▶ The intake ports are on the inside and the exhaust ports on the outside of the left and right banks respectively.

▶ Upright intake ports are used to improve the intake efficiency.

▶ A taper squish combustion chamber is used to improve anti-knocking performance and intake efficiency. In addition, engine performance and fuel economy have been improved.

▶ The siamese type intake port is used to reduce the overall surface area of the intake port walls. This prevents the fuel from adhering onto the intake port walls, thus reducing HC exhaust emissions.

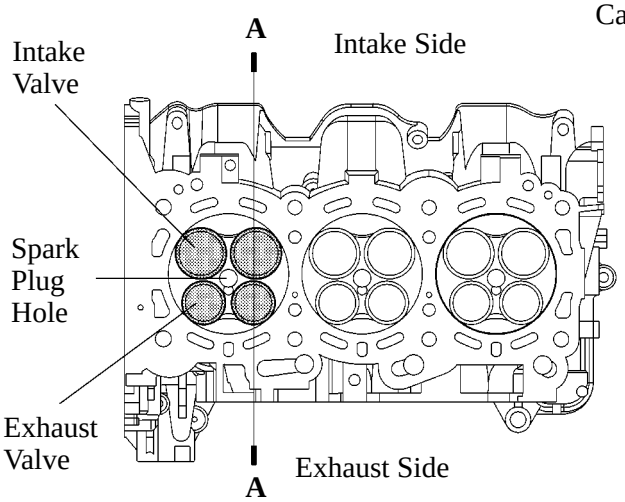

View from Back Side

285EG07

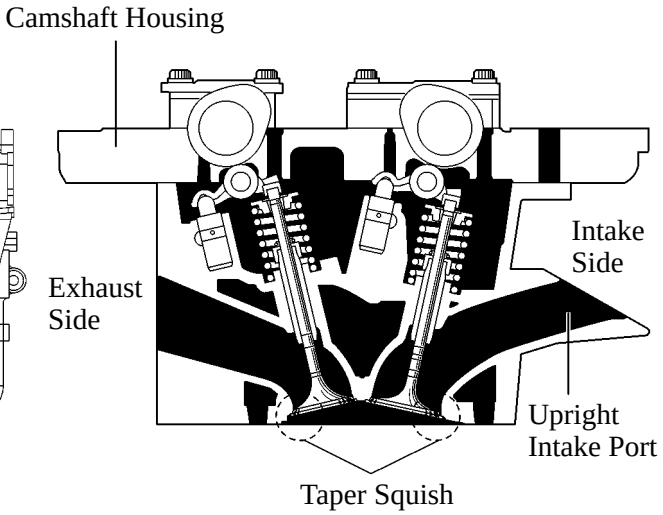

A - A Cross Section

285EG08

— REFERENCE —

Siamese Type

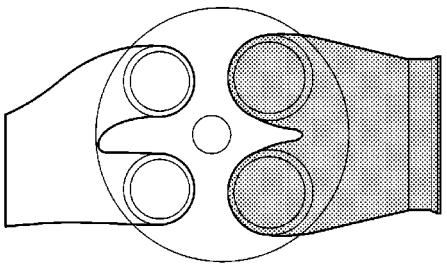

215EG18

Independent Type

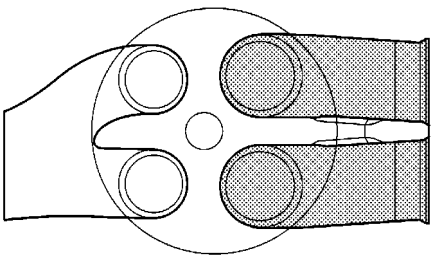

215EG19

4. Cylinder Block

▶The cylinder block is made of aluminum alloy, so it is lightweight.

▶The cylinder block has a bank angle of 60 , a bank offset of 36.6 mm (1.441 in.) and a bore pitch of 105.5 mm (4.15 in.), resulting in a compact block in its length and width even for its displacement.

▶Installation bosses of the two knock sensors are located on the inner side of left and right banks.

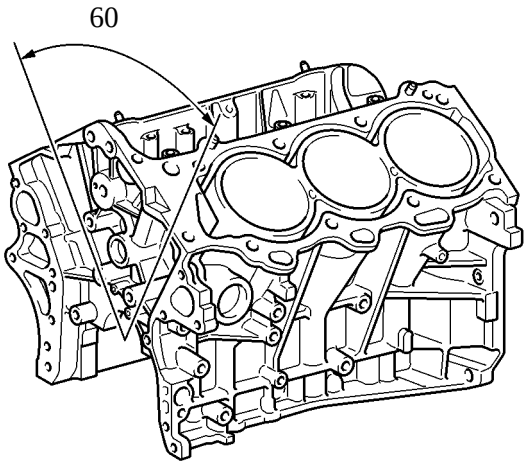

285EG09

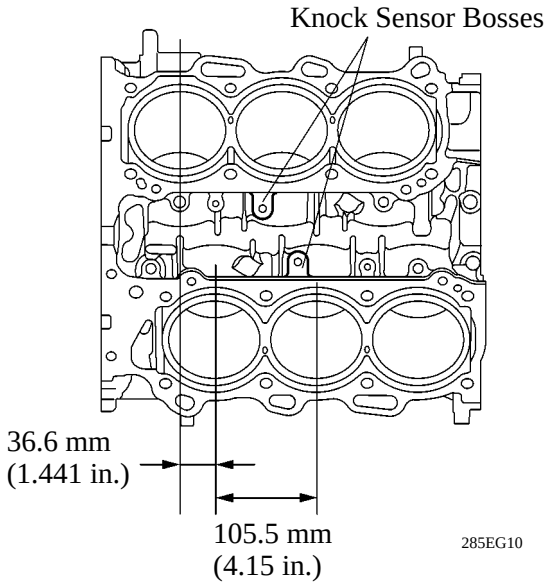

285EG10

View from Top Side

▶A water passage has been provided between the cylinder bores. By allowing the engine coolant to flow between the cylinder bores, this construction enables the temperature of the cylinder walls to be kept uniform.

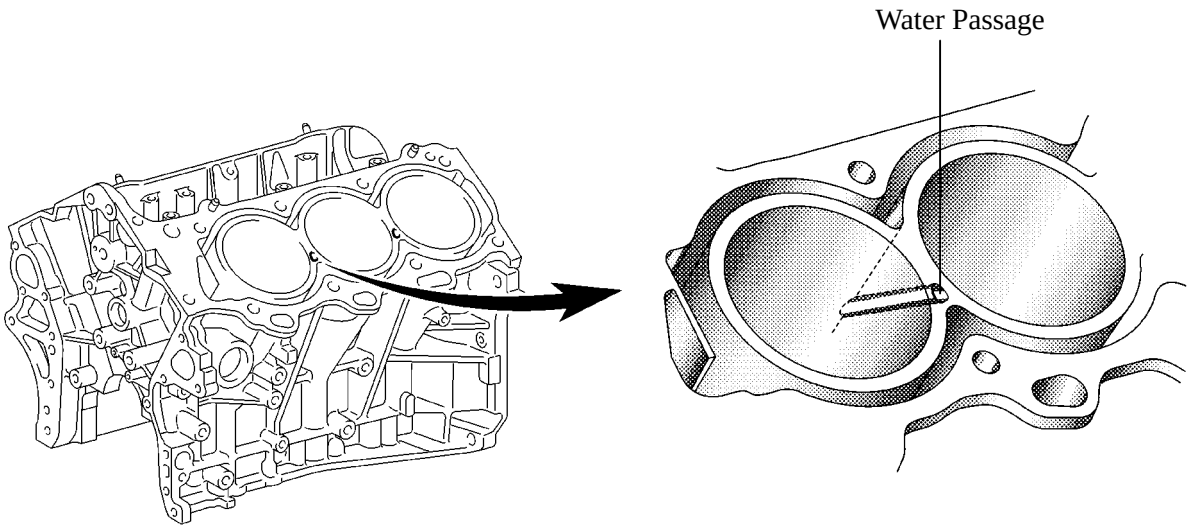

285EG11

▶ A compact block has been achieved by producing the thin cast-iron liners and cylinder block as a unit. It is not possible to bore the block with this liner.

▶ The liners are the spiny-type, which have been manufactured so that their casting exterior forms a large irregular surface in order to enhance the adhesion between the liners and the aluminum cylinder block. The enhanced adhesion helps improve heat dissipation, resulting in a lower overall temperature and heat deformation of the cylinder bores.

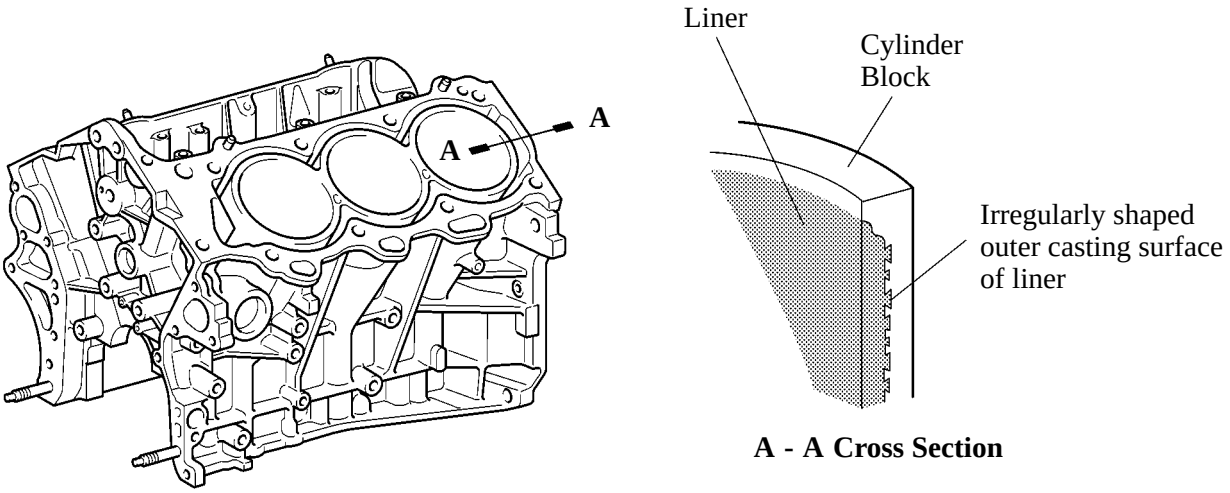

285EG12

5. Piston

▶ The piston is made of aluminum alloy.

▶ The piston head portion uses a taper squish shape to accomplish fuel combustion efficiency.

▶ The piston skirt is coated with resin to reduce the friction loss.

▶ The groove of the top ring is coated with alumite to ensure abrasion resistance.

▶ By increasing the machining precision of the cylinder bore diameter, the outer diameter of the piston is made into one size.

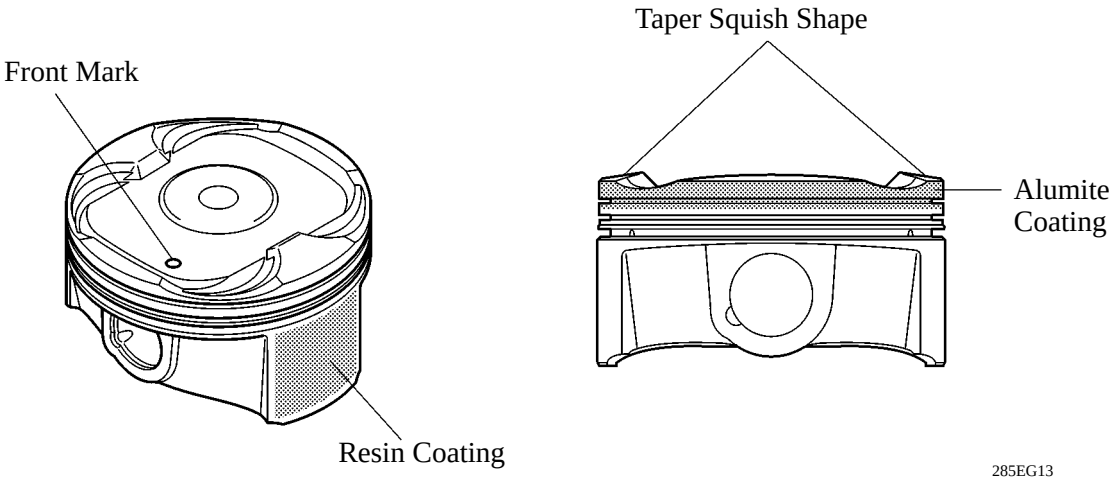

285EG13

6. Connecting Rod and Connecting Rod Bearing

- ▶Connecting rods that have been forged for high strength are used for weight reduction.
- ▶Knock pins are used at the mating surfaces of the bearing caps of the connecting rod to minimize the shifting of the bearing caps during assembly.
- ▶The connecting rods and caps are made of high-strength steel for weight reduction.
- ▶Nutless-type plastic region tightening bolts are used on the connecting rods for a lighter design.
- ▶An aluminum bearing is used for the connecting rod bearings.
- ▶The connecting rod bearings are reduced in width to reduce friction.

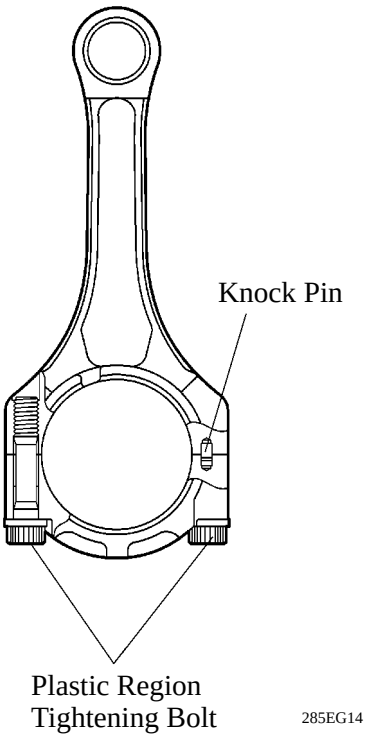

7. Crankshaft

- ▶A crankshaft made of forged steel, which excels in rigidity and wear resistance, is used.
- ▶The crankshaft has 4 journals and 5 balance weights.

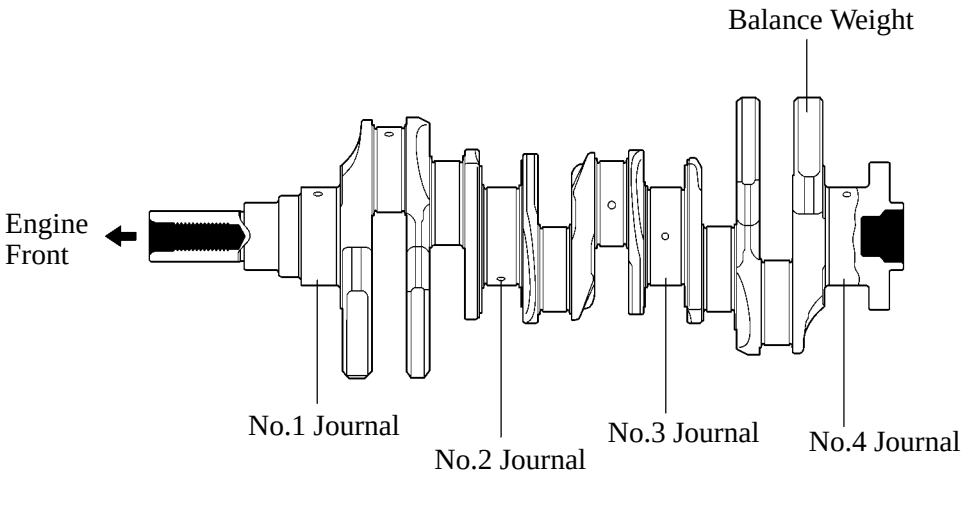

8. Crankshaft Bearing and Crankshaft Bearing Cap

▶ The crankshaft bearing is made of aluminum alloy.

▶ Similar to the connecting rod bearings, the lining surface of the crankshaft bearings is micro-grooved to realize an optimal amount of oil clearance. As a result, cold-engine cranking performance is improved and engine vibration is reduced.

▶ The upper main bearing has an oil groove around its inside circumference.

▶ The crankshaft bearing caps are tightened using 4 plastic-region tightening bolts for each journal. In addition, each cap is tightened laterally to improve its reliability.

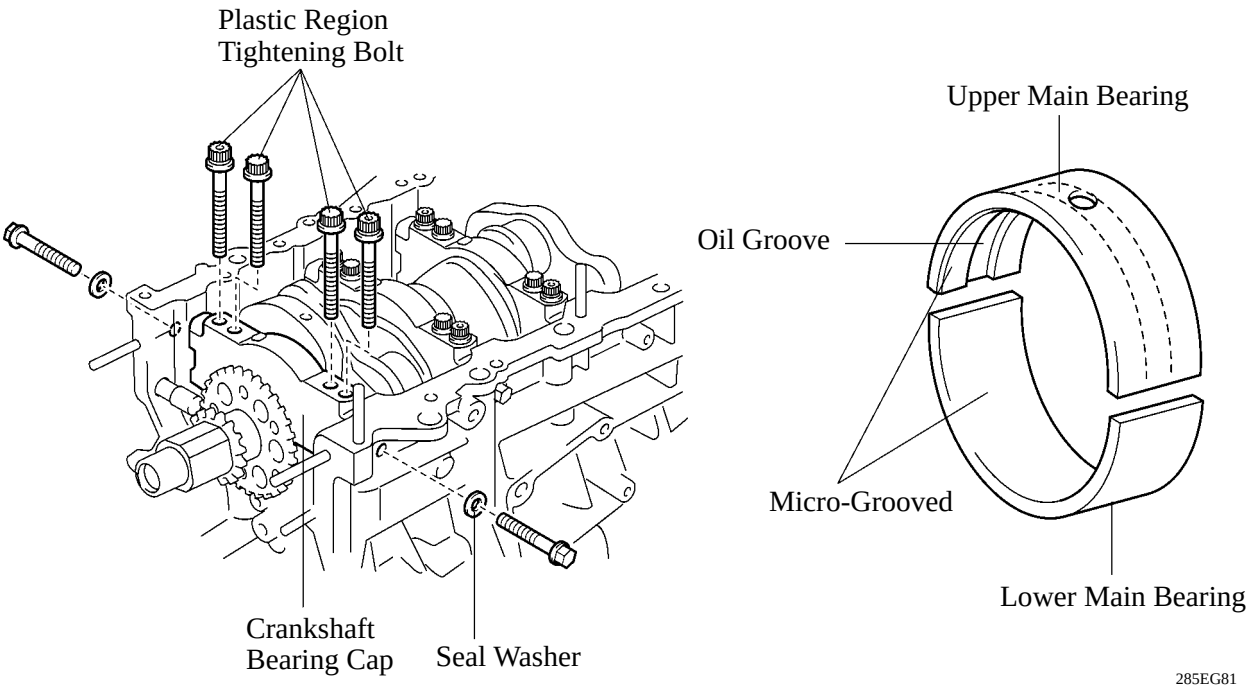

9. Crankshaft Pulley

The rigidity of the crankshaft pulley with its built-in torsional damper rubber reduces noise.

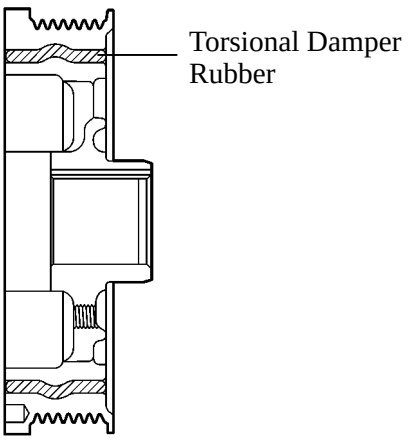

10. Oil Pan

▶The oil pan No.1 material is made of aluminum alloy.

▶The oil pan No.2 material is made of steel.

▶The oil pan No.1 is secured to the cylinder block and the transmission housing and is increasing rigidity.

▶The oil filter case is integrated with the oil pan No.1.

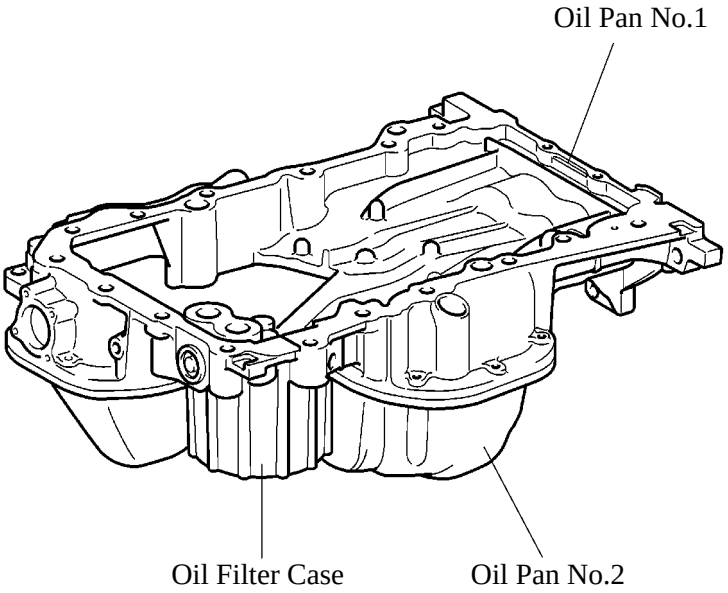

285EG16

●VALVE MECHANISM

1. General

▶Each cylinder of this engine has 2 intake valves and 2 exhaust valves. Intake and exhaust efficiency is increased due to the larger total port areas.

▶This engine uses roller rocker arms with built-in needle bearings. This reduces the friction that occurs between the cams and the areas (roller rocker arms) that push the valves down, thus improving fuel economy.

▶A hydraulic lash adjuster, which maintains a constant zero valve clearance through the use of oil pressure and spring force, is used.

▶The intake camshafts are driven by the crankshaft via the primary timing chain. The exhaust camshafts are driven by the intake camshaft of the respective bank via the secondary timing chain.

▶This engine uses a dual VVT-i (Variable Valve Timing-intelligent) system, which controls the intake and exhaust camshafts to provide optimal valve timing according to driving conditions. With this adoption, lower fuel consumption, higher engine performance, and fewer exhaust emissions have been achieved. For details of dual VVT-i control, refer to page EG-121.

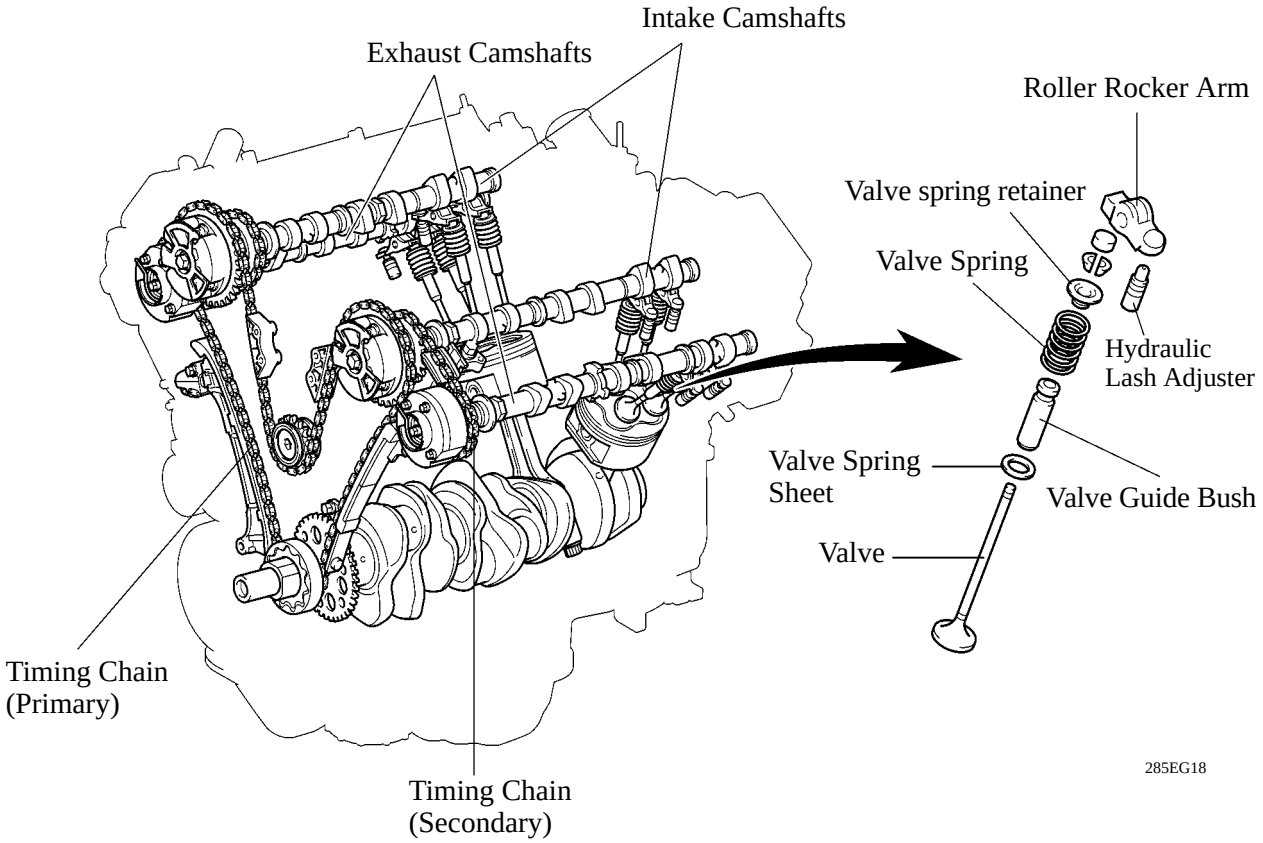

2. Camshaft

- ▶The camshafts are made of cast iron alloy.
- ▶An oil passage is provided on the intake and exhaust camshaft in order to supply engine oil to the VVT-i system.
- ▶A VVT-i controller has been installed on the front of the intake and exhaust camshaft to vary the timing of the intake and exhaust valves.
- ▶Together with the use of the roller rocker arm, the cam profile has been designed with an indented R (radius). This results in increased valve lift when the valve begins to open and finishes closing, helping to achieve enhanced output performance.

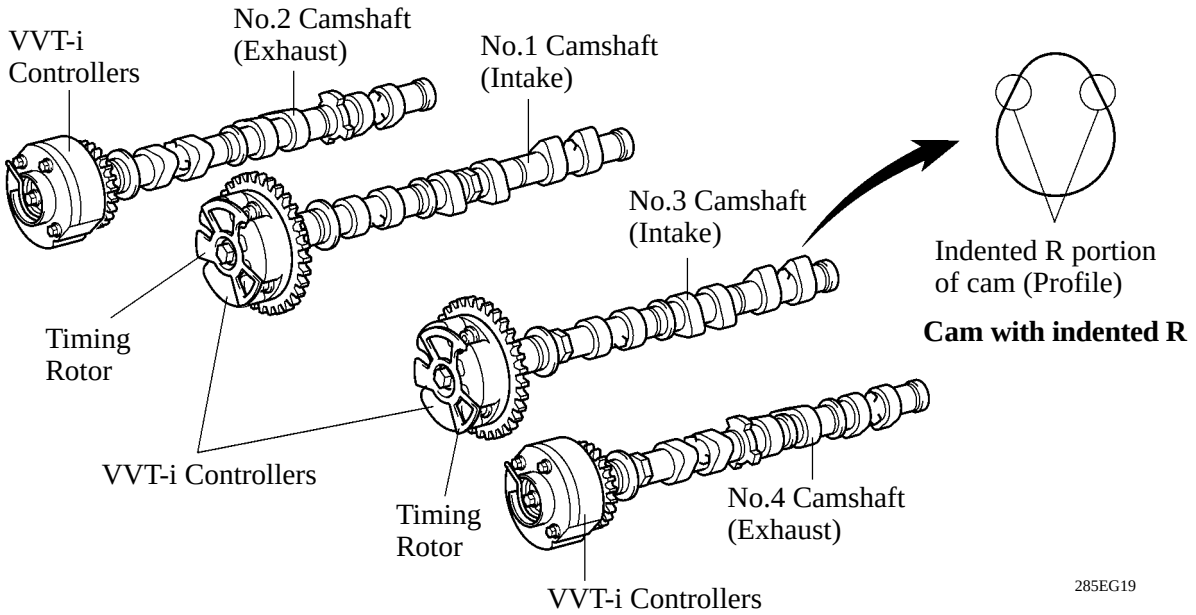

3. Timing Chain and Chain Tensioner

- ▶Both the primary and secondary timing chains use roller chains with a pitch of 9.525 mm (0.375 in.).
- ▶The timing chain is lubricated by an oil jet.
- ▶The primary chain uses one timing chain tensioner and each of the secondary chains for the right and left banks uses one timing chain tensioner.
- ▶Both the primary and secondary chain tensioners use a spring and oil pressure to maintain proper chain tension at all times. They suppress noise generated by the timing chains.
- ▶The chain tensioner for the primary chain is the ratchet type with a non-return mechanism.

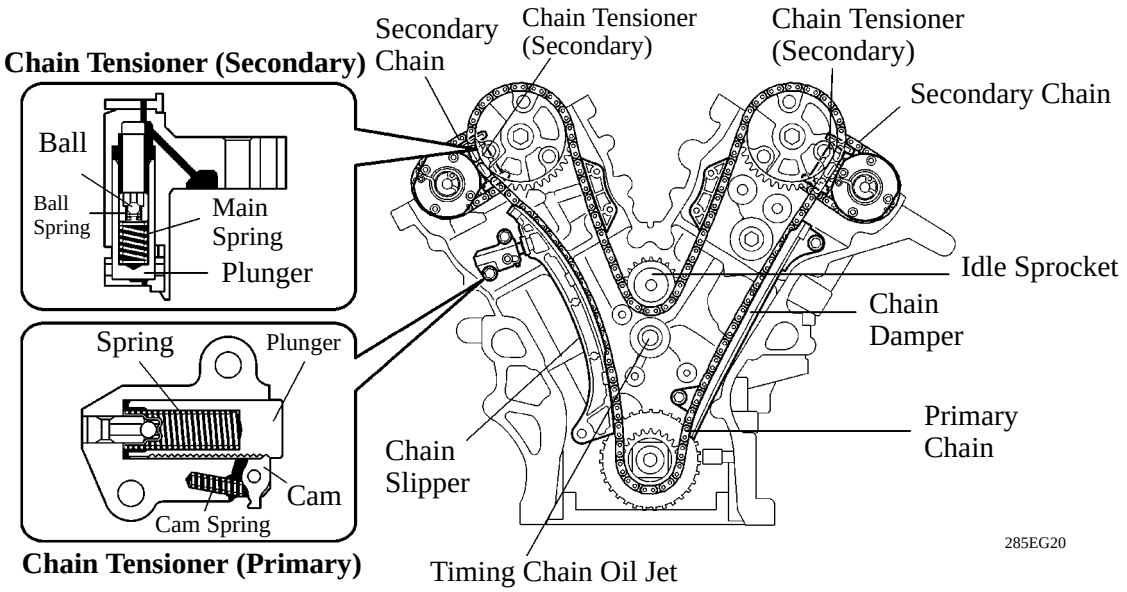

4. Timing Chain Cover

The timing chain cover has an integrated construction consisting of the cooling system (water pump and water passage) and the lubrication system (oil pump and oil passage). Thus, the number of parts has been reduced to reduce weight.

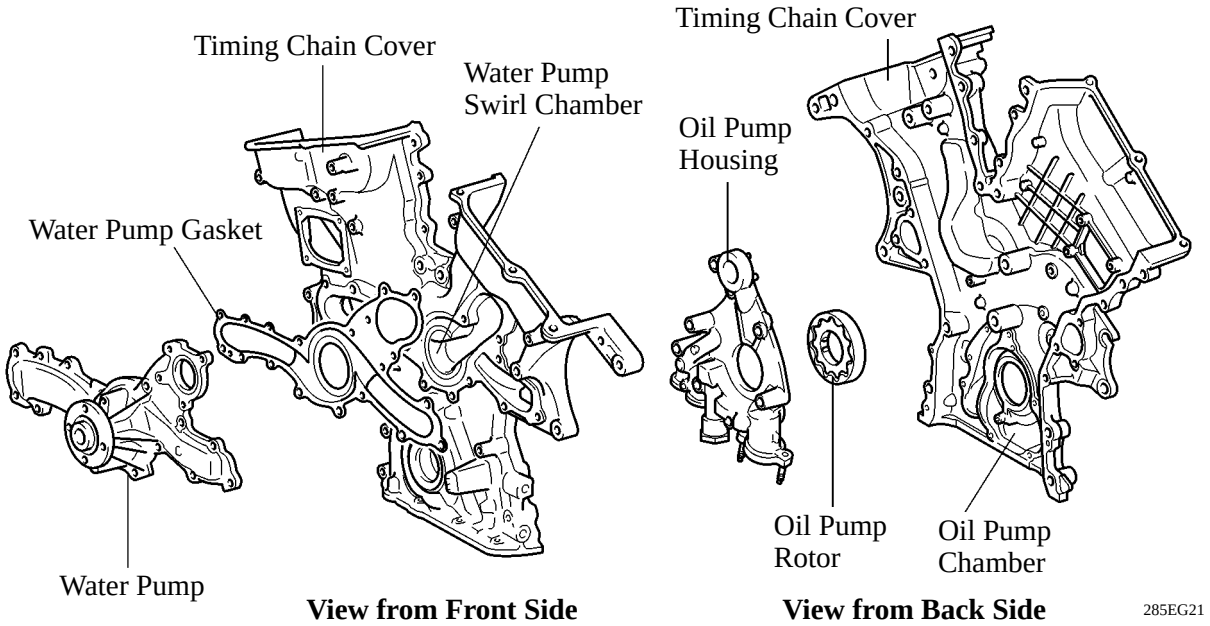

5. Hydraulic Lash Adjuster

▶ The hydraulic lash adjuster, which is located at the fulcrum of the roller rocker arm, consists primarily of a plunger, plunger spring, check ball, and check ball spring.

▶ The engine oil that is supplied by the cylinder head and the built-in spring actuate the hydraulic lash adjuster. The oil pressure and the spring force that act on the plunger push the roller rocker arm against the cam, in order to adjust the valve clearance that is created during the opening and closing of the valve. As a result, engine noise is reduced.

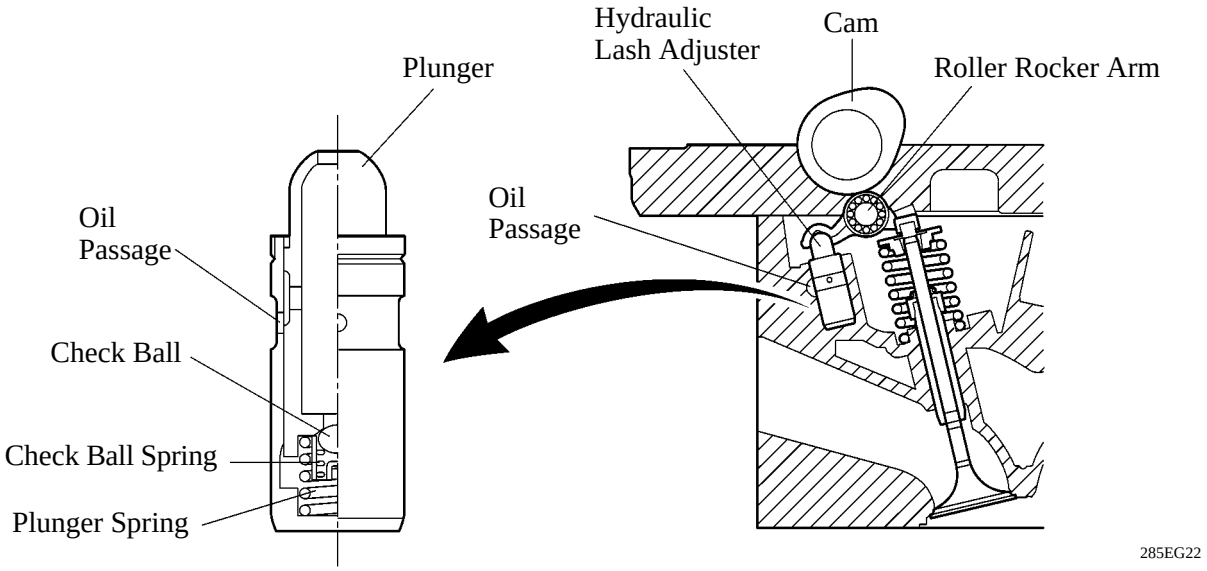

Service Tip

Valve clearance adjustment is not necessary because a hydraulic lash adjuster is used in this model.

●LUBRICATION SYSTEM

1. General

▶The lubrication circuit is fully pressurized and all oil passes through an oil filter.

▶A cycloid rotor type oil pump is used.

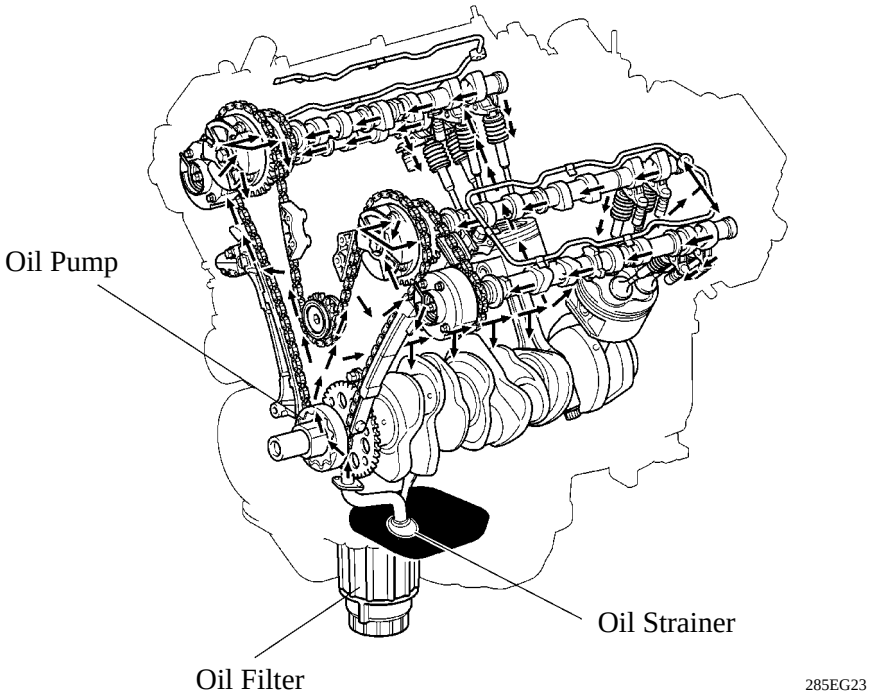

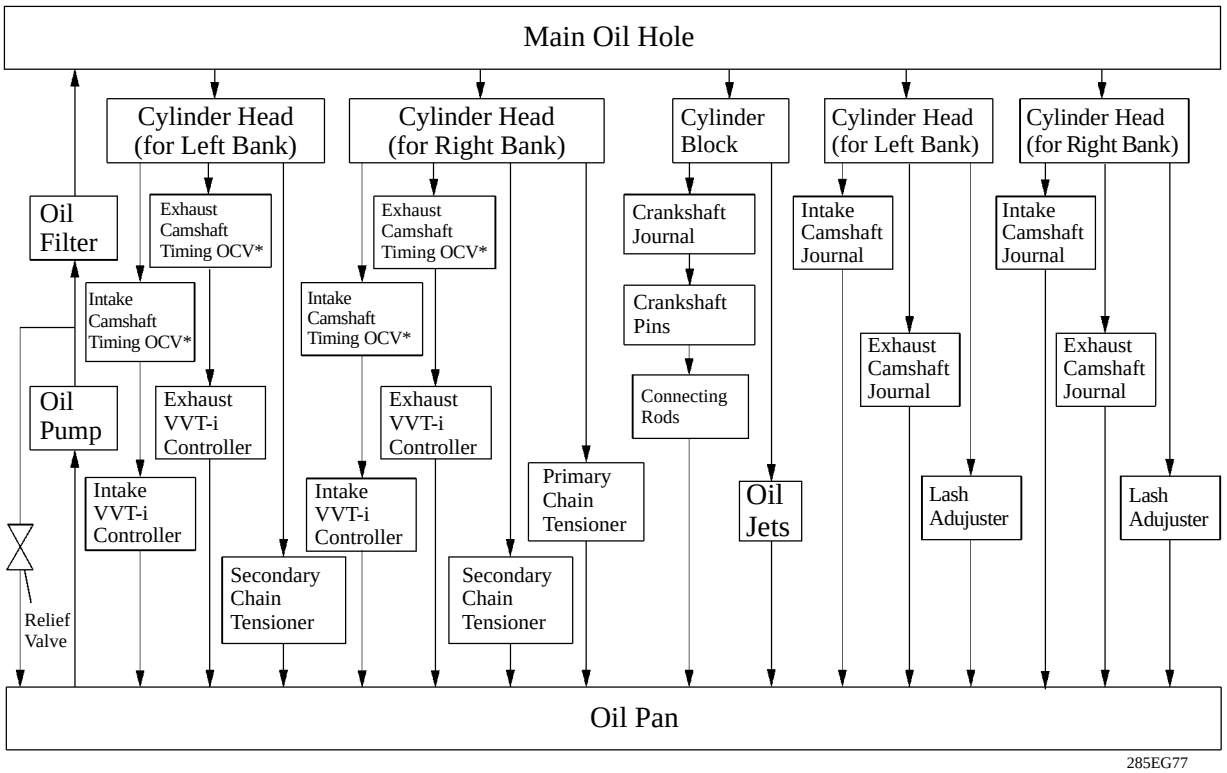

*: Oil Control Valve

2. Oil Pump

▶ A compact cycloid rotor type oil pump directly driven by the crankshaft is used.

▶ This oil pump uses an internal relief method which circulates relief oil to the suction passage in the oil pump. This aims to minimize oil level change in the oil pan, reduce friction, and reduce air mixing rate in the oil.

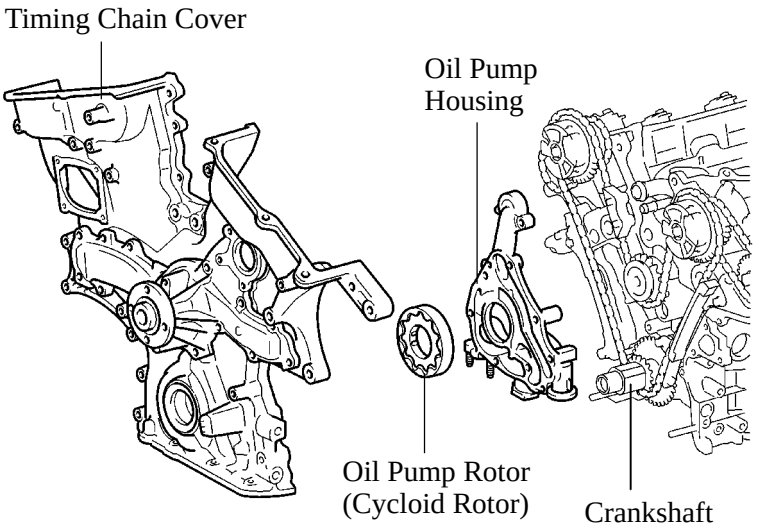

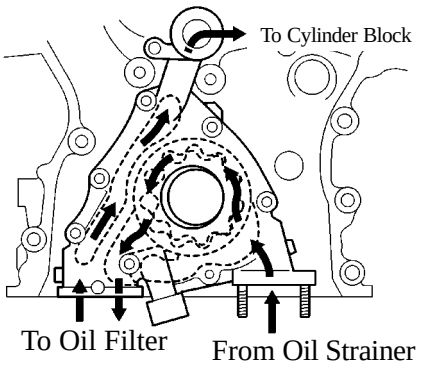

Oil passage in the oil pump

285EG24

3. Oil Jet

▶ Oil jets for cooling and lubricating the pistons have been provided in the cylinder block, in the center of the right and left banks.

▶ These oil jets contain a check valve to prevent oil from being fed when the oil pressure is low. This prevents the overall oil pressure in the engine from dropping.

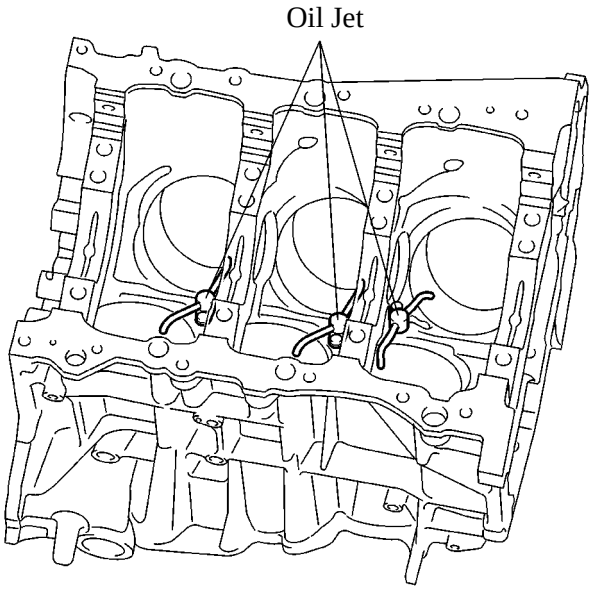

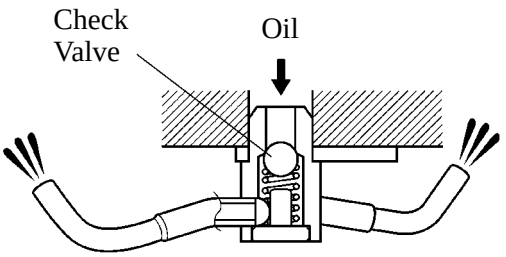

Oil Jet Cross Section

285EG25

4. Oil Filter

▶ A newly developed oil filter with a replaceable element is used. The element uses a high-performance filter paper to improve filtration performance. It is also combustible for environmental protection.

▶ An aluminum alloy filter cap is used to extend its life.

▶ This oil filter has a structure which can drain the oil remaining in the oil filter. This prevents oil from spattering when replacing the element and allows the technician to work without touching hot oil.

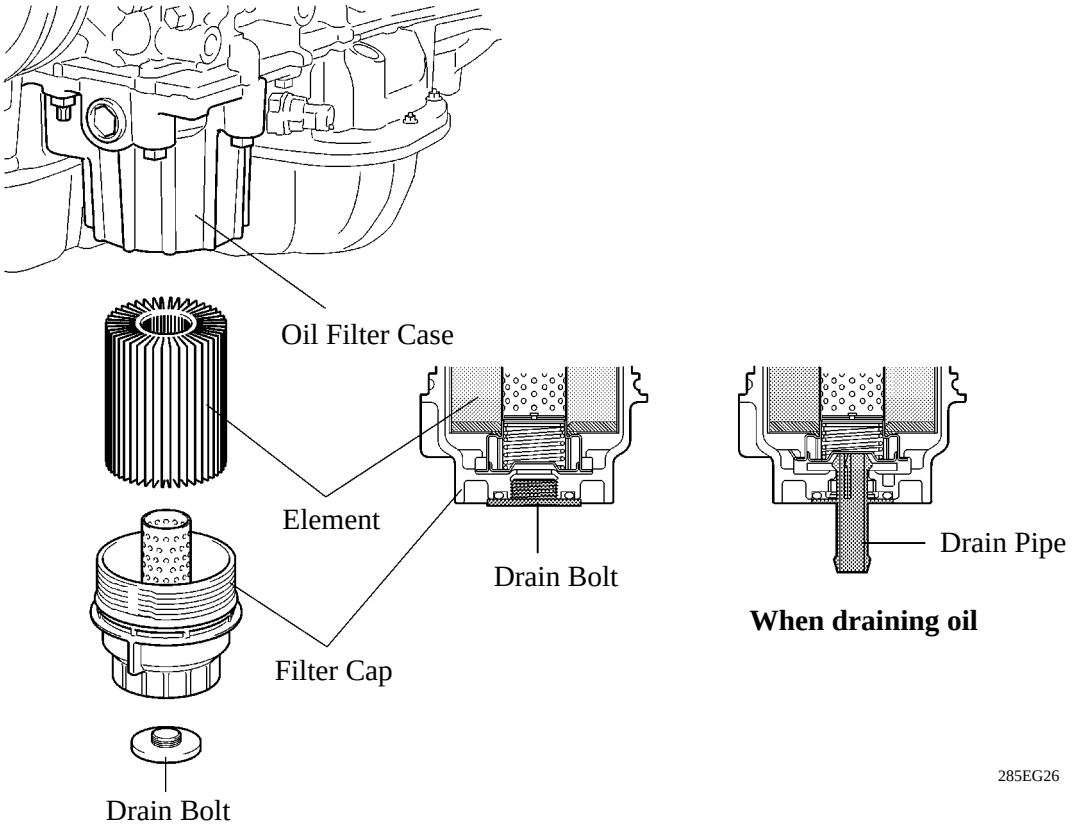

Service Tip

▶ The oil in the oil filter can be drained by removing the drain bolt and inserting the drain pipe supplied with the element into the oil filter. For details, refer to the 2007 Camry Repair Manual (Pub. No. RM0250U).

▶ The engine oil maintenance interval for a model that has an oil filter with a replaceable element is the same as that for the conventional model.

▪ COOLING SYSTEM

1. General

The cooling system is a pressurized forced circulation system with open air type reserve tank.

A thermostat with a bypass valve is located on the water inlet housing to maintain suitable temperature distribution in the cooling system.

A cooling fan control system in which the ECM optimally controls cooling fan speed is used. For details, see page EG-130.

An air bleeder plug is provided on the water inlet assembly to improve the efficiency of changing the engine coolant. For details, refer to the 2007 Camry Repair Manual (Pub. No. RM0250U).

The engine coolant uses TOYOTA genuine SLLC (Super Long Life Coolant).

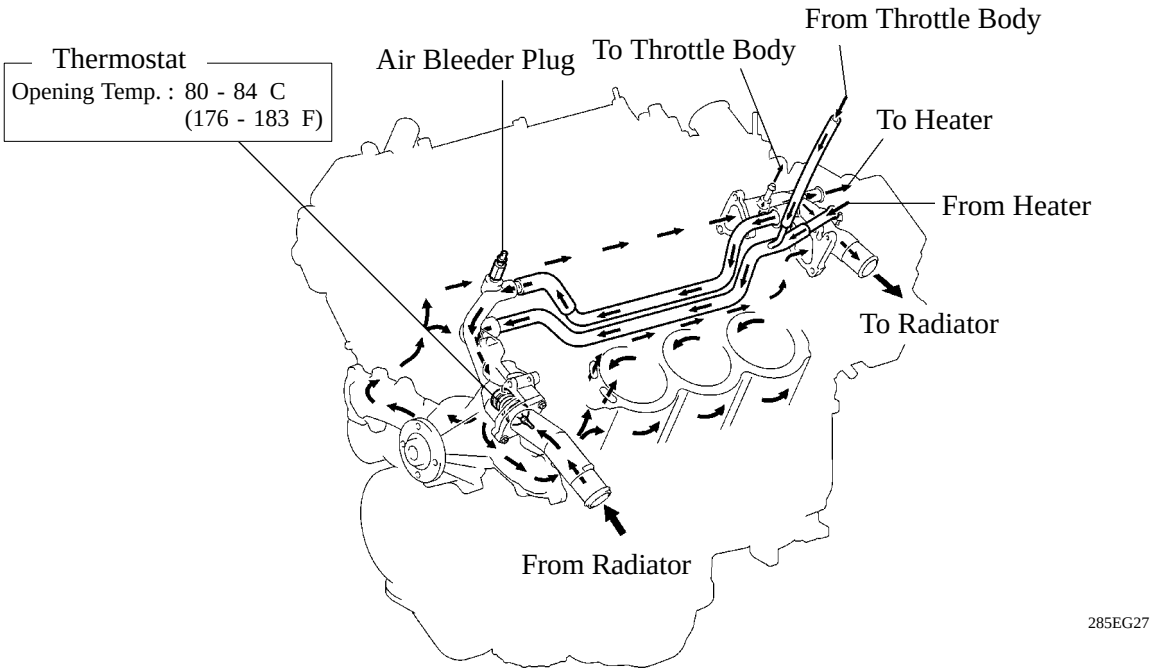

▶ System Diagram ●

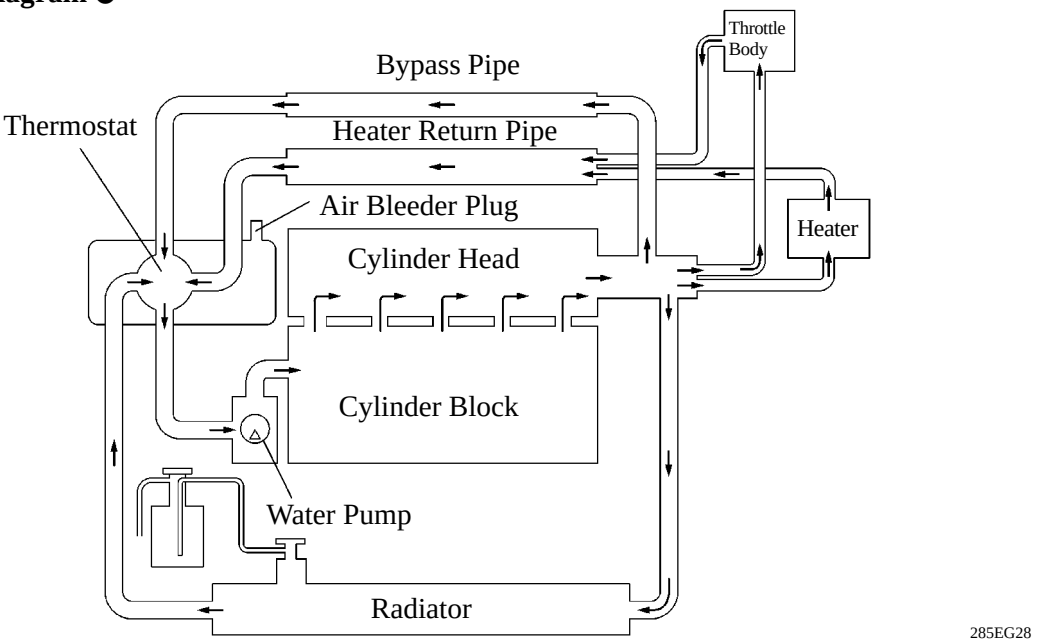

2. Water Pump

The water pump has two volute chambers, and circulates coolant uniformly to the left and right banks of the cylinder block.

A rust-resistant water pump rotor made of stainless steel is used.

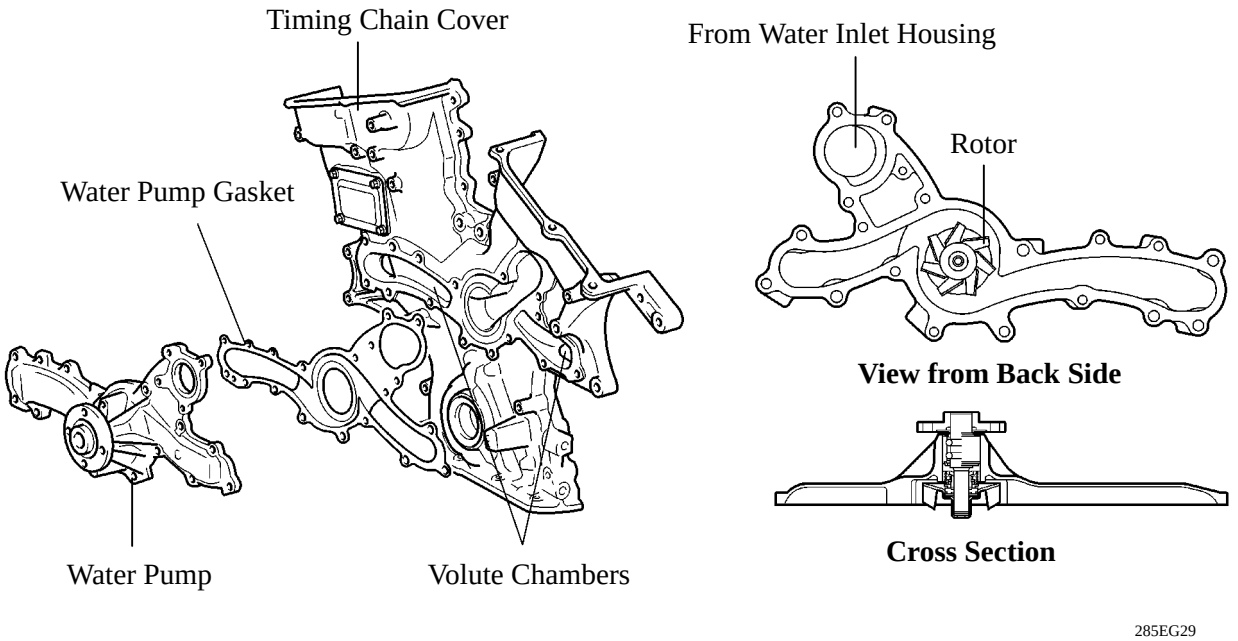

3. Engine Coolant

TOYOTA genuine SLLC (Super Long Life Coolant) is used. Maintenance interval is as shown in the table below:

Type		TOYOTA Genuine SLLC or the Following*
Maintenance Intervals	First Time	100,000 miles (160,000 km)
	Subsequent	Every 50,000 miles (80,000 km)
Color		Pink

*: Similar high quality ethylene glycol based non-silicate, non-amine, non-nitrite, and non-borate coolant with long-life hybrid organic acid technology. (Coolant with hybrid organic acid technology consists of the combination of low phosphates and organic acids.)

SLLC is pre-mixed (50 % coolant and 50 % deionized water for U.S.A. or 55 % coolant and 45 % deionized water for Canada), so no dilution is needed when adding or replacing SLLC in the vehicle.

You can also apply the new maintenance interval (every 50,000 miles/80,000 km) to vehicles initially filled with LLC (red-colored), if you use SLLC (pink-colored) for the engine coolant change.

●INTAKE AND EXHAUST SYSTEM

1. General

▶The link-less type throttle body is used and it realizes excellent throttle control.

▶The intake air chamber made of plastic is used.

▶A stainless steel exhaust manifold is used for weight reduction.

▶ETCS-i (Electronic Throttle Control System-intelligent) provides excellent throttle control. For details, see page EG-49.

▶ACIS (Acoustic Control Induction System) has improved the engine performance. For details, see page EG-127.

▶The air intake control system is used to reduce engine noise. For details, see page EG-129.

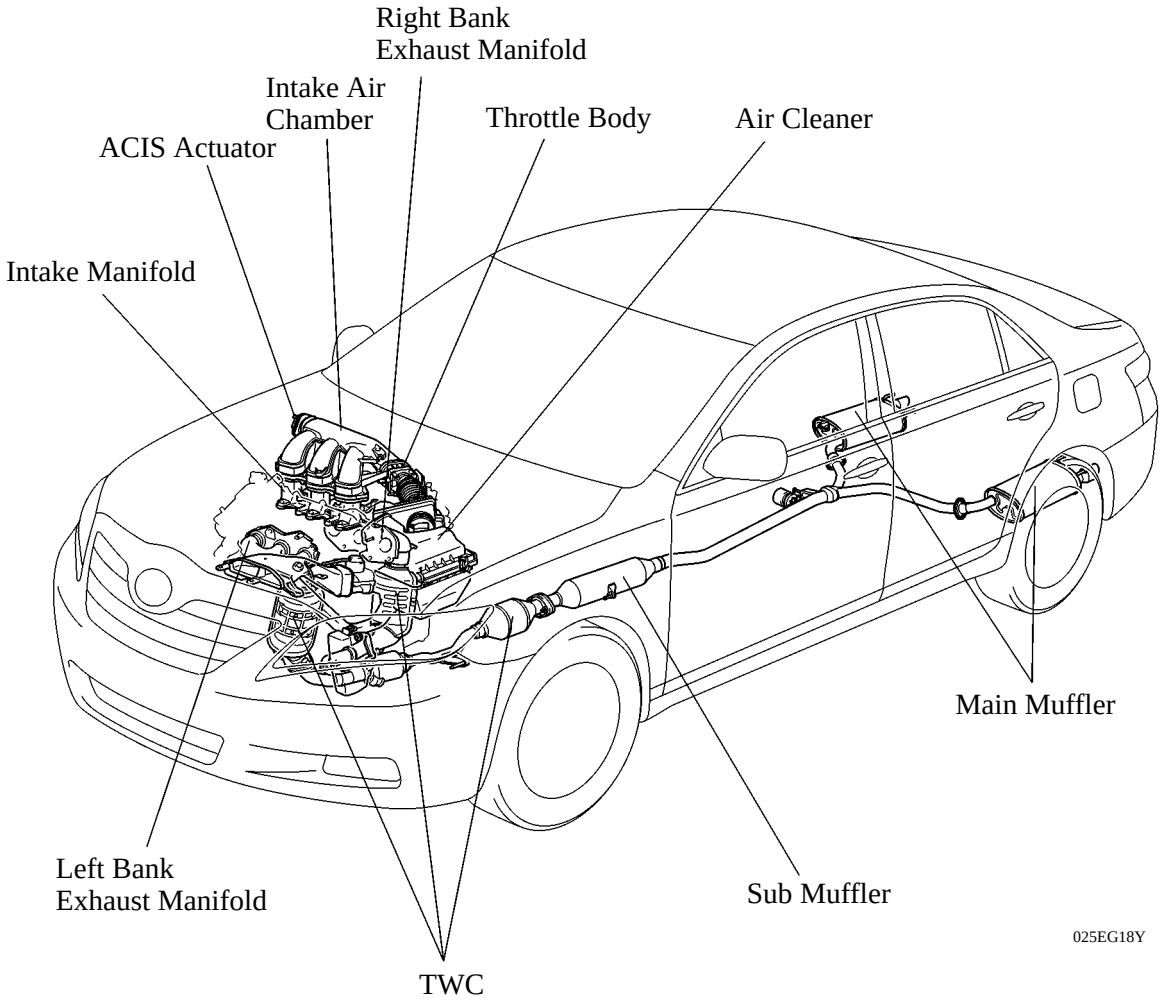

2. Air Cleaner

▶ A nonwoven, full-fabric type air cleaner element is used.

▶ A carbon filter, which adsorbs the HC that accumulates in the intake system when the engine is stopped, is used in the air cleaner case in order to reduce evaporative emissions. This filter is maintenance-free.

▶ Along with the use of the air intake control system, an air intake control valve is provided on the air cleaner case.

▶ Resonators have been provided to reduce the amount of intake air sound.

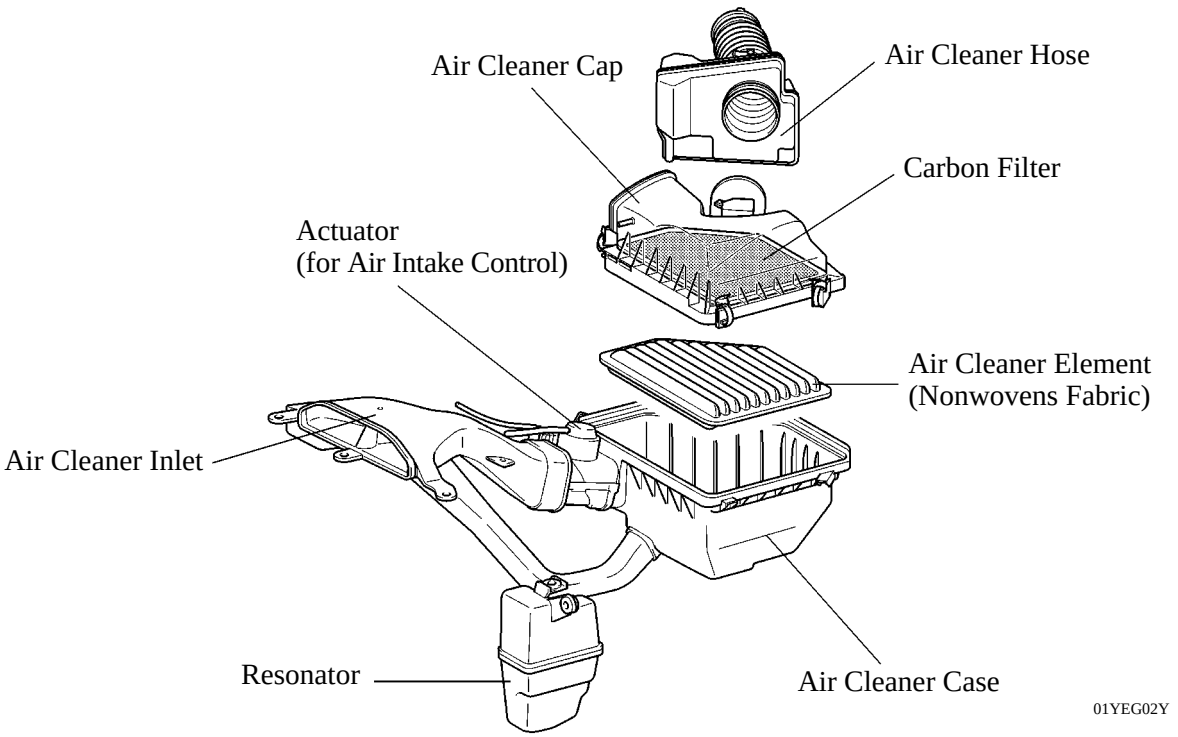

3. Throttle Body

▶ A link-less type throttle body in which the throttle position sensor and the throttle control motor are integrated is used. It realizes excellent throttle valve control. For details, see page EG-118.

▶ In the throttle control motor, a DC motor with excellent response and minimal power consumption is used. The ECM performs the duty ratio control of the direction and the amperage of the current that flows to the throttle control motor in order to regulate the throttle valve angle.

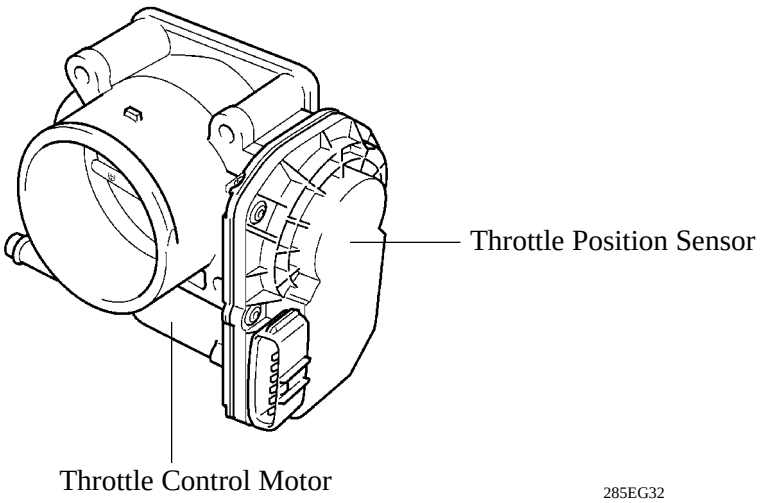

4. Intake Air Chamber

▶The intake air chamber is made of plastic to realize lightweight.

▶The air intake chamber consists of upper and lower section and contains an intake air control valve. This valve is activated by ACIS (Acoustic Control Induction System) and is used to alter the intake pipe length to improve the engine performance in all speed range. For details, see page EG-127.

▶The ACIS actuator has used an electric actuator and is laser-welded onto the intake air chamber. Many of the components are made of plastic for weight reduction.

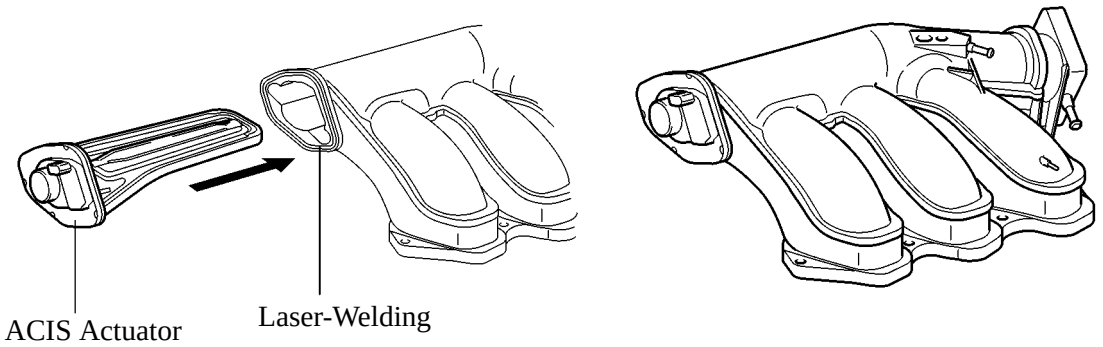

285EG33

— REFERENCE —

Laser-Welding:

In laser-welding, a laser-absorbing material (for the intake air chamber) is joined to a laser-transmitting material (for the ACIS actuator). Laser beams are then irradiated from the laser-transmitting side. The beams penetrate the laser-transmitting material to heat and melt the surface of the laser-absorbing material. Then, the heat of the laser-absorbing material melts the laser-transmitting material and causes both materials to become welded.

5. Intake Manifold

▶Light weight aluminum alloy is used for the intake manifold.

▶The intake manifold gaskets has rubber coating applied onto surface, and provide superior durability.

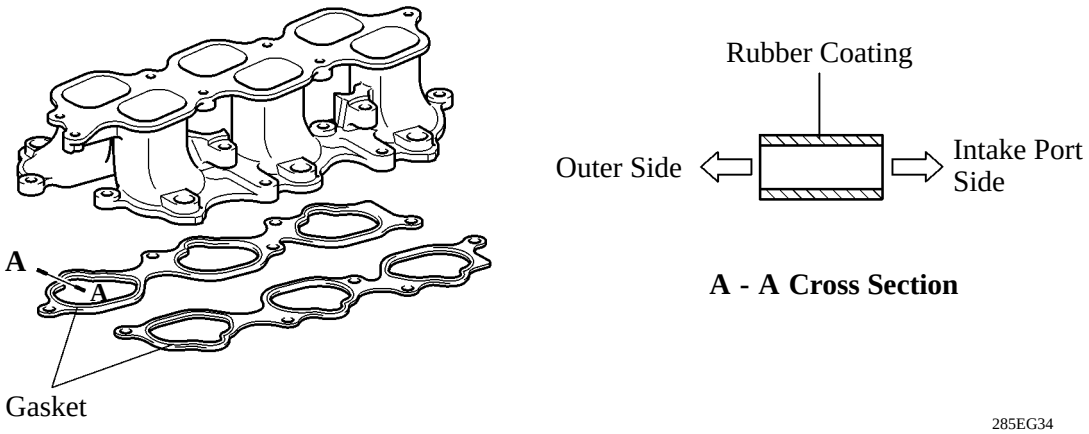

285EG34

6. Exhaust Manifold

▶ A stainless steel exhaust manifold with an integrated TWC (Three-Way Catalytic converter) is used for warm-up of the TWC and for weight reduction.

▶ A ceramic type TWC is used. This TWC is incorporated on each of the right and left banks.

▶ This TWC enables to improve exhaust emissions by optimizing the cells density and the wall thickness.

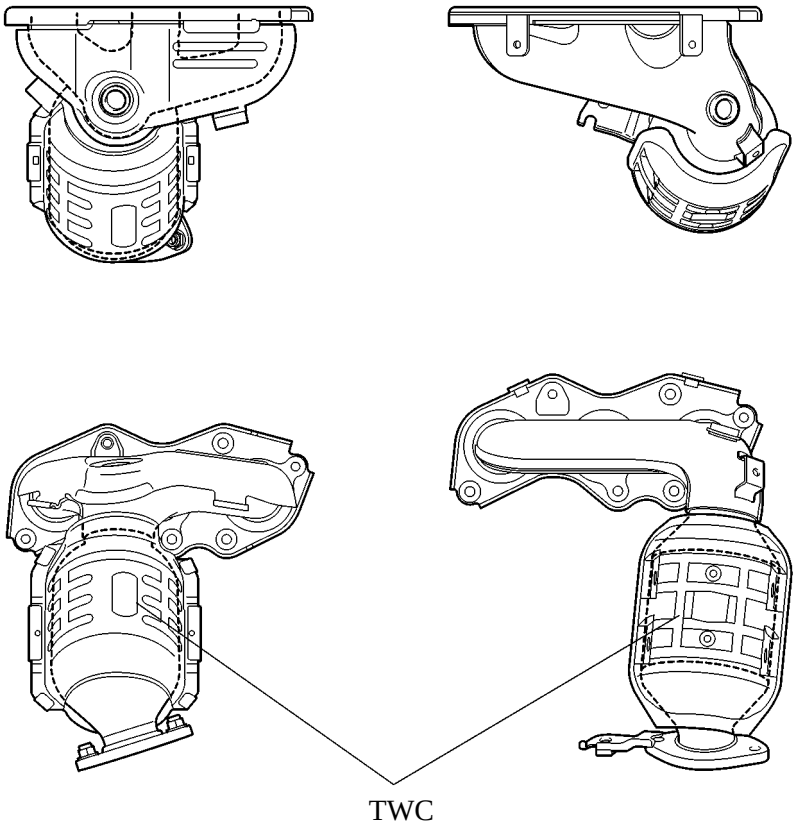

01YEG18TE

Right Bank Exhaust Manifold

Left Bank Exhaust Manifold

7. Exhaust Pipe

▶ The exhaust pipe is made of stainless steel for improved rust resistance.

▶ A ceramic type TWC is used.

▶ A dual main muffler is used to ensure engine performance and reduce exhaust noise.

▶ A long tail mechanism is used in the main muffler to aim at reducing exhaust noise while the engine is running in the low speed range.

Long Tail Mechanism

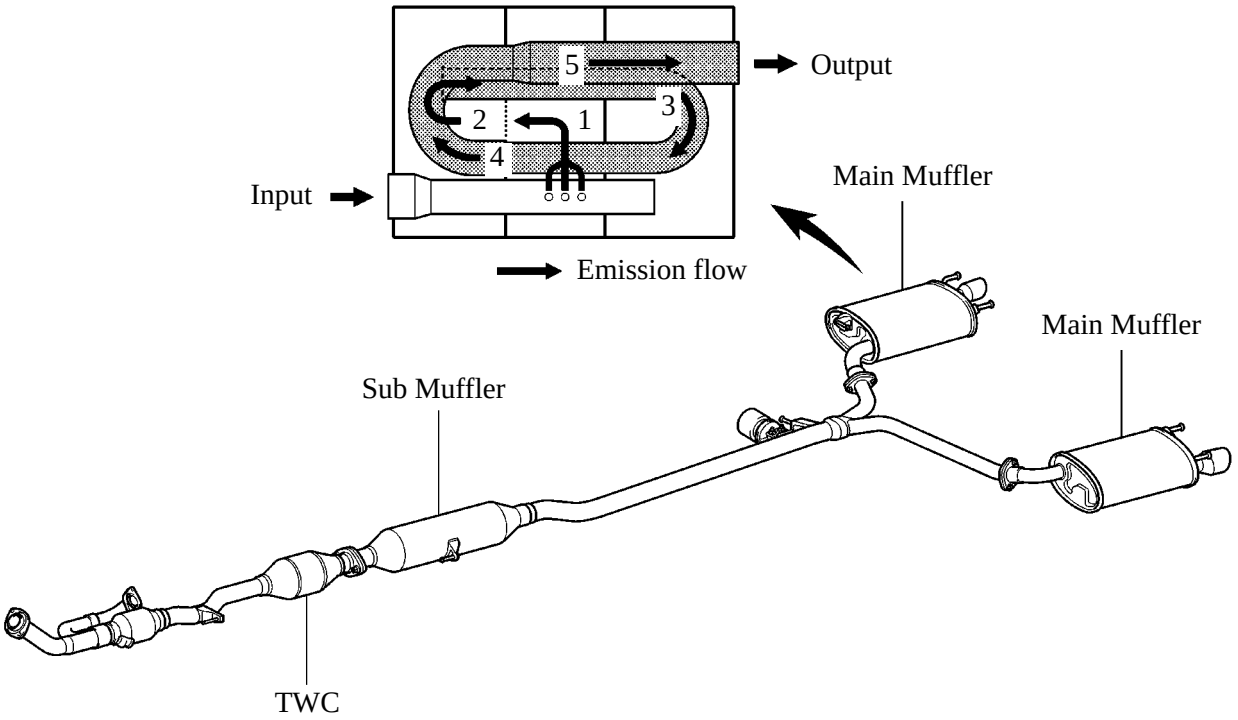

025EG19Y

●FUEL SYSTEM

1. General

▶The fuel returnless system is used to reduce evaporative emissions.

▶A fuel cut control is used to stop the fuel pump when the SRS airbag is deployed in a frontal or side collision. For details, see page EG-58.

▶The fuel delivery pipe made of plastic is used.

▶A quick connector is used to connect the fuel pipe with the fuel hose for excellent serviceability.

▶A compact 12-hole type injector is used to increase atomization of the fuel.

▶A compact fuel pump in which a fuel filter, pressure regulator, and fuel sender gauge is integrated in the fuel pump assembly is used.

▶The ORVR (On-Board Refueling Vapor Recovery) system is used. For details, see page EG-134.

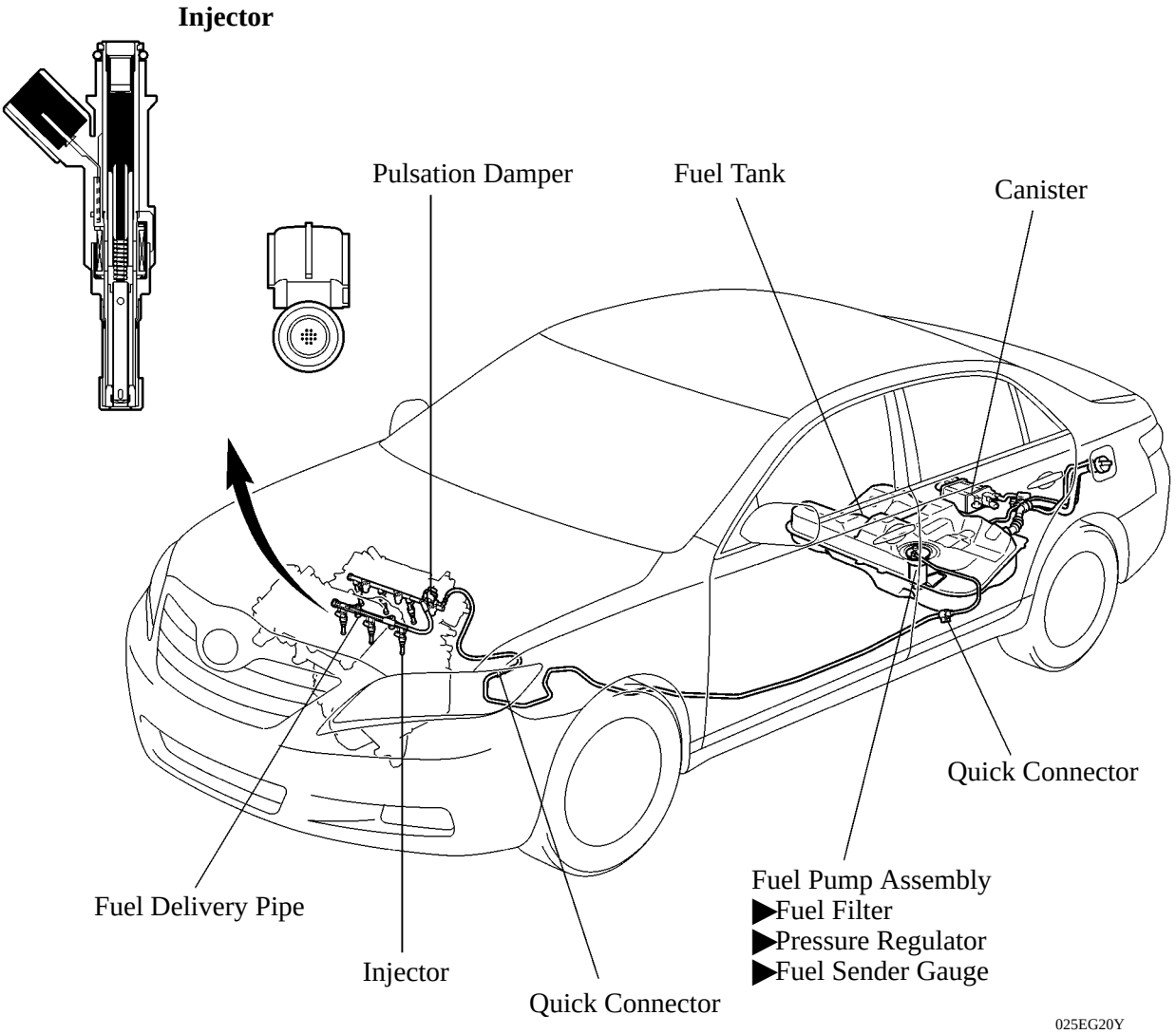

2. Fuel Returnless System

This system is used to reduce the evaporative emission. As shown below, integrating the fuel filter, pressure regulator, and fuel sender gauge with fuel pump assembly, it possible to discontinue the return of fuel from the engine area and prevent temperature rise inside the fuel tank.

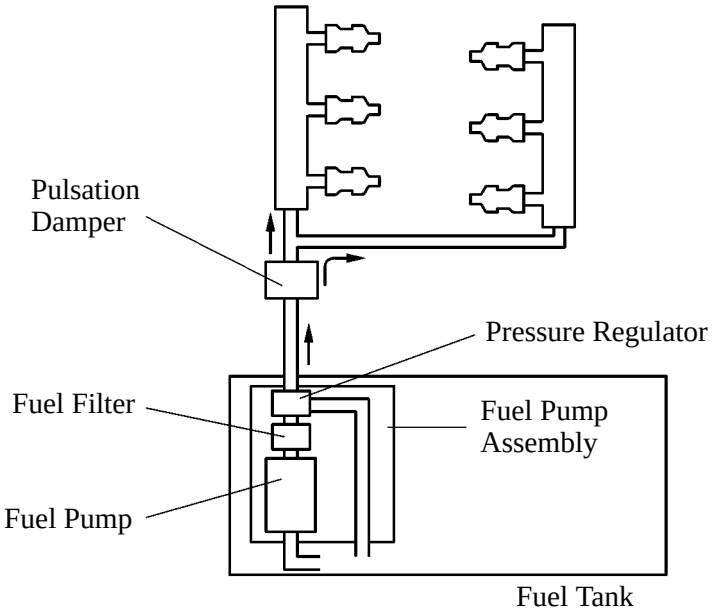

208EG117

3. Fuel Delivery Pipe

▶The fuel delivery pipe made of plastic is used to realize lightweight.

▶The right and left fuel delivery pipes are connected by a nylon tube.

▶The pulsation damper is sealed with an O-ring and secured with a holder.

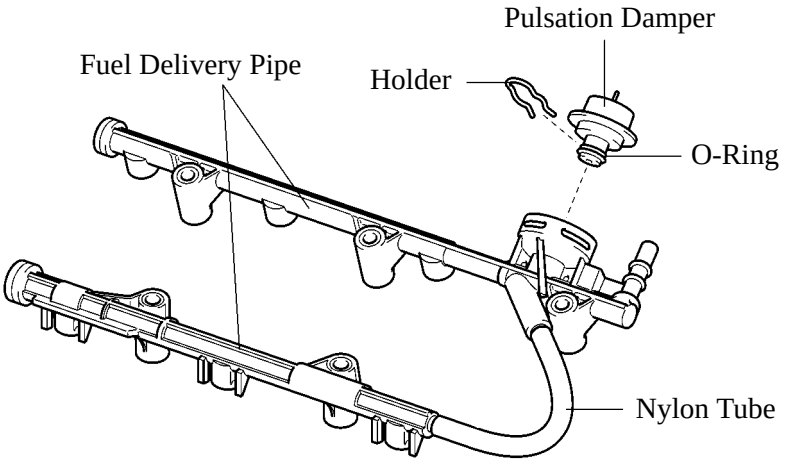

285EG38

▪ IGNITION SYSTEM

1. General

A DIS (Direct Ignition System) is used. The DIS improves the ignition timing accuracy, reduces high-voltage loss, and enhances the overall reliability of the ignition system by eliminating the distributor.
The DIS is an independent ignition system which has one ignition coil (with igniter) for each cylinder.

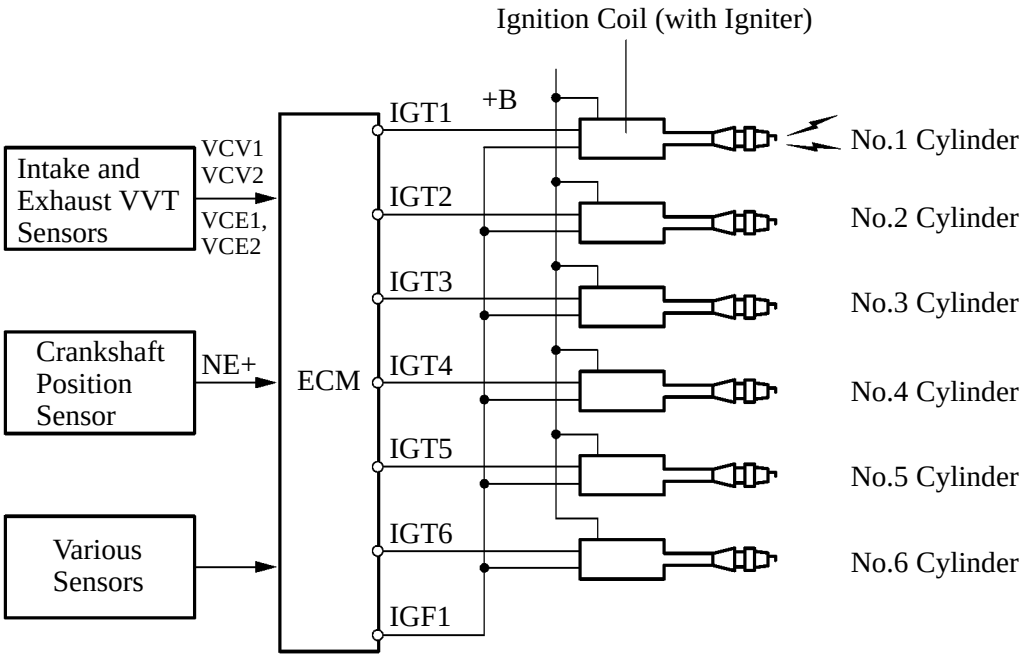

238EG68

2. Ignition Coil

The DIS provides 6 ignition coils, one for each cylinder. The spark plug caps, which provide contact to spark plugs, are integrated with an ignition coil. Also, an igniter is enclosed to simplify the system.

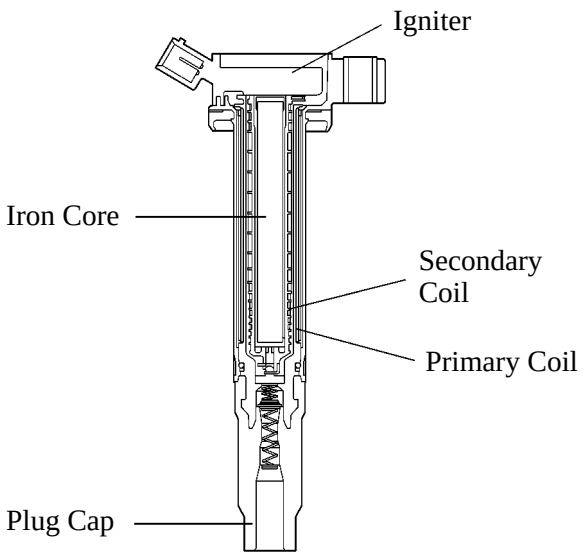

Ignition Coil Cross Section

285EG39

3. Spark Plug

Long-reach type spark plugs are used. This type of spark plugs allows the area of the cylinder head to receive the spark plugs to be made thick. Thus, the water jacket can be extended near the combustion chamber, which contributes to cooling performance.

Iridium-tipped spark plugs are used to achieve a 120,000 miles (193,000 km) maintenance interval. By making the center electrode of iridium, the superior ignition performance as platinum-tipped spark plugs is achieved and durability has been increased.

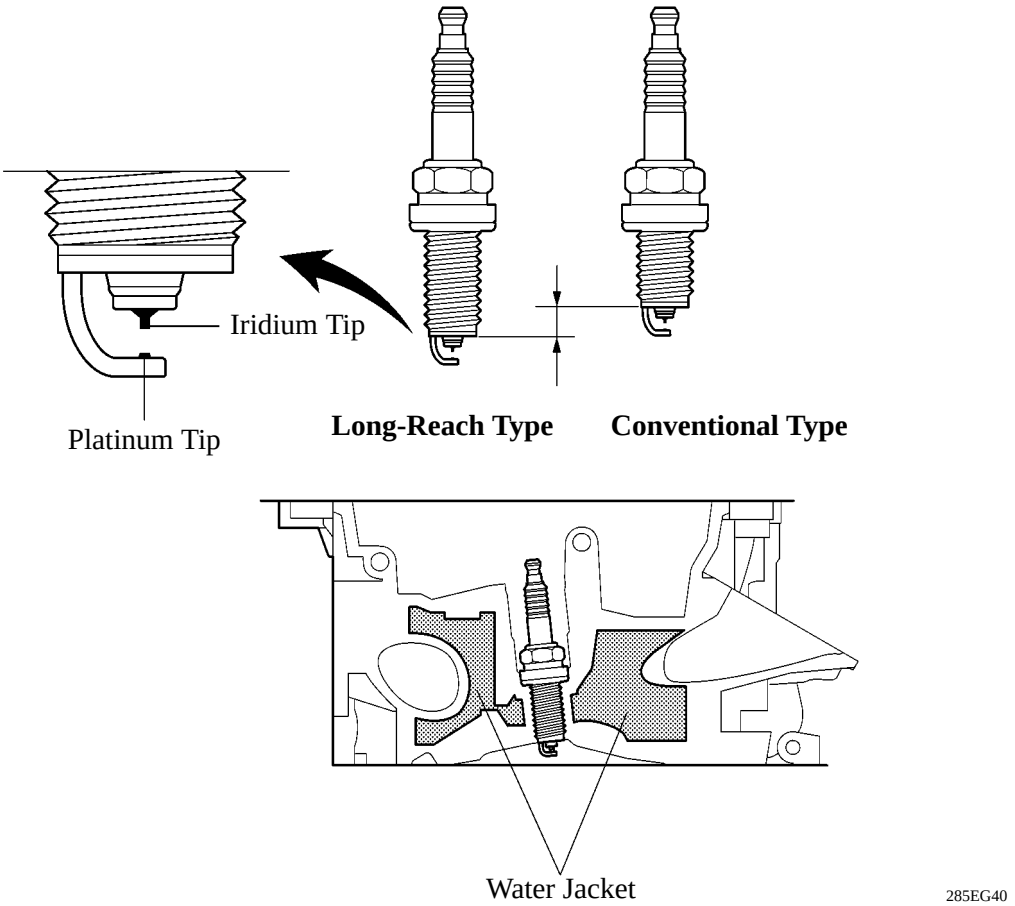

▶ **Specifications ●**

DENSO	FK20HR11
Plug Gap	1.0 - 1.1 mm (0.0394 - 0.043 in.)

▪ CHARGING SYSTEM

As on the 2GR-FE engine model, a compact and lightweight segment conductor type alternator (SE0 type) that generates a high amperage output in a highly efficient manner is used as standard equipment.

A generator pulley with a clutch is used.

For details of this alternator, refer to 2AZ-FE Engine Charging System on page EG-28.

▪ STARTING SYSTEM

As on the 2GR-FE engine model, a compact and lightweight PS (Planetary reduction - Segment conductor motor) type starter (PS1.7 type) is used as standard equipment.

For details of this stator, refer to 2AZ-FE Engine Starting System on page EG-30.

▶ENGINE MOUNT

1. General

A 3-point support on the front sub-frame is used. An active control engine mount is used on the front engine mount and a liquid-filled compound engine mount is used on the right and left engine mounts to realize low noise and vibration and to achieve high levels of both riding comfort and drivability.

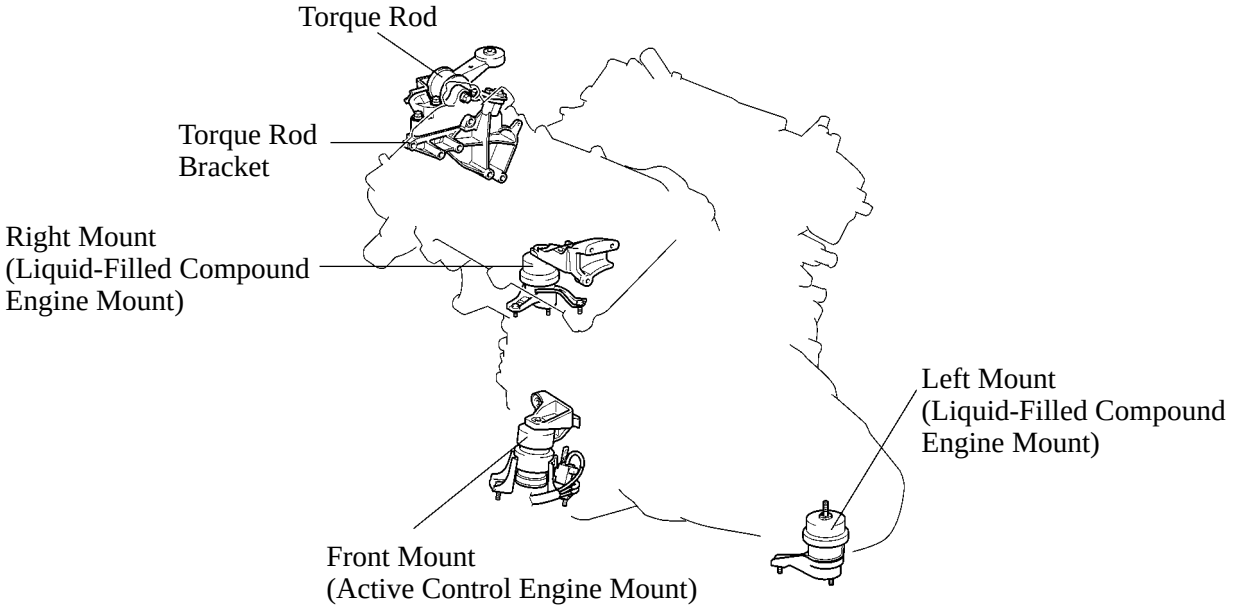

285EG42

2. Active Control Engine Mount

The operating range of the active control engine mount is during idling under the engine speed of 900 rpm. Signals that are synchronized to the engine speed are sent by the ECM to the VSV and the engine vacuum is utilized to vary the pressure of the intake air chamber in the active control engine mount. As a result, the diaphragm vibrates, and using the liquid as a medium, the rubber mount vibrates. This vibration of the engine mount acts to cancel out the engine vibration during idle, thus reducing the vibration and noise at idle. The engine mount's damping force to generate vibrations is adjusted through the effects of the orifice and the side branch.

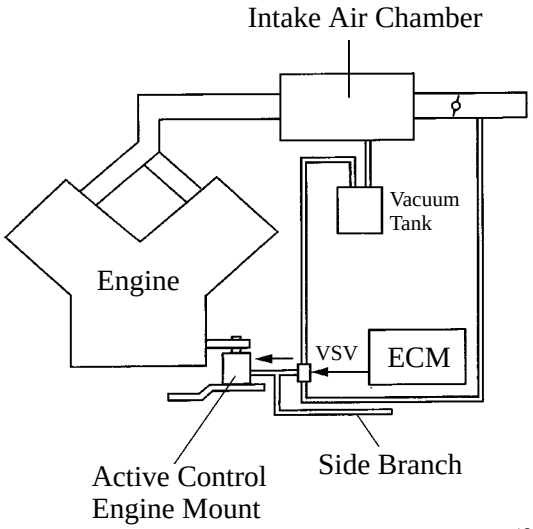

161ES46

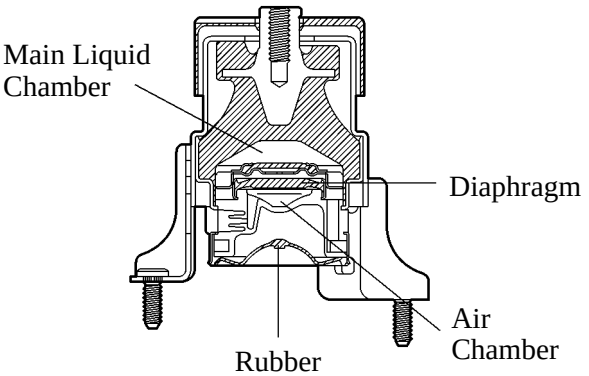

285EG43

●SERPENTINE BELT DRIVE SYSTEM

1. General

▶Accessory components are driven by a serpentine belt consisting of a single V-ribbed belt. It reduces the overall engine length, weight and number of engine parts.

▶An automatic tensioner eliminates the need for tension adjustment.

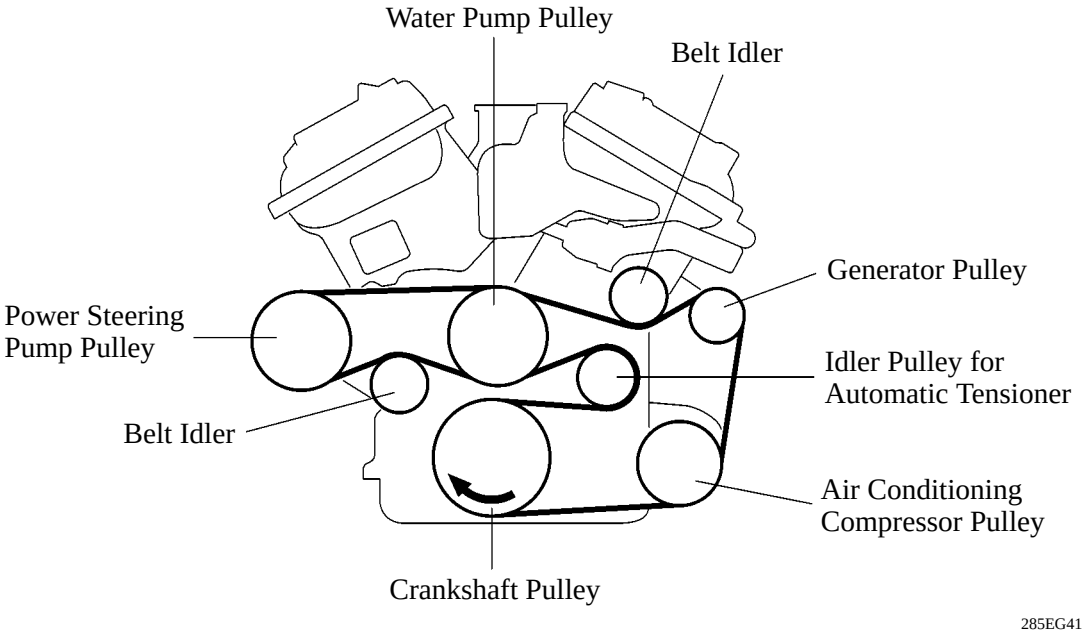

2. Automatic Tensioner

The tension of the V-ribbed belt is properly maintained by the tension spring that is enclosed in the automatic tensioner.

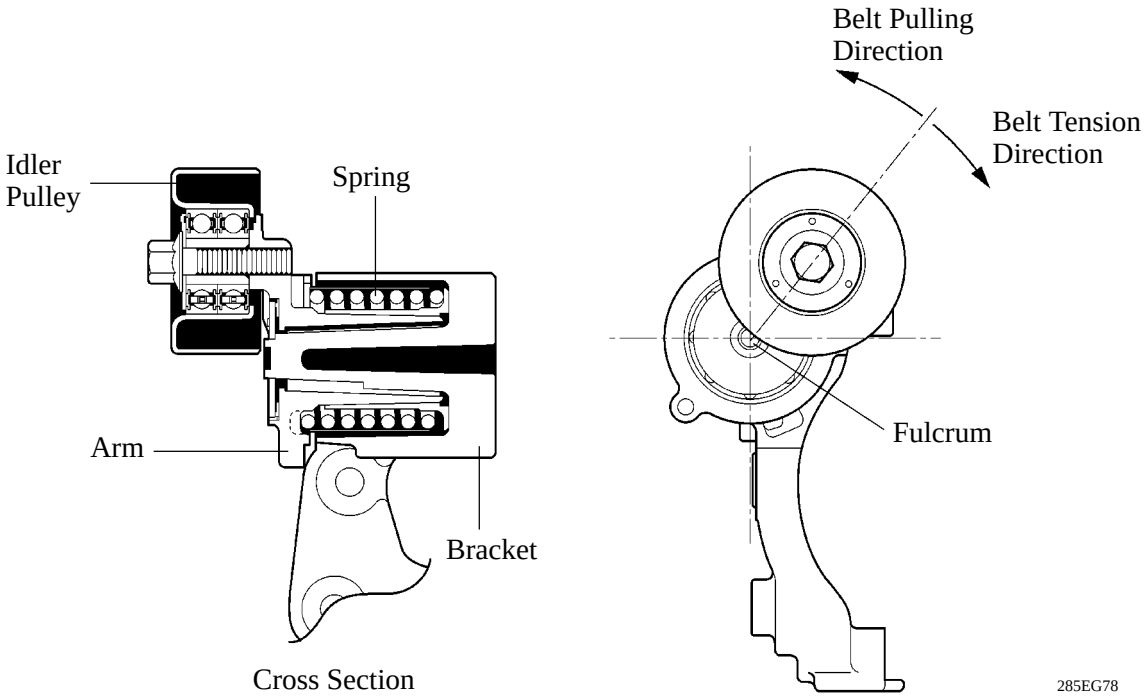

●ENGINE CONTROL SYSTEM

1. General

The engine control system of the 2GR-FE engine has the following features.

System	Outline
SFI [Sequential Multiport Fuel Injection]	▶An L-type SFI system directly detects the intake air mass with a hot wire type air flow meter. ▶The fuel injection system is a sequential multiport fuel injection system. ▶Fuel injection takes two forms: Synchronous injection, which always takes place with the same timing in accordance with the basic injection duration and an additional correction based on the signals provided by the sensors. Non-synchronous injection, which takes place at the time an injection request based on the signals provided by the sensors is detected, regardless of the crankshaft position. ▶Synchronous injection is further divided into group injection during a cold start, and independent injection after the engine is started.
ESA [Electronic Spark Advance]	▶Ignition timing is determined by the ECM based on signals from various sensors. The ECM corrects ignition timing in response to engine knocking. ▶This system selects the optimal ignition timing in accordance with the signals received from the sensors and sends the (IGT) ignition signal to the igniter.
ETCS-i [Electronic Throttle Control System-intelligent] [See page EG-49]	Optimally controls the throttle valve opening in accordance with the amount of accelerator pedal effort and the condition of the engine and the vehicle.
Dual VVT-i System [Dual Variable Valve Timing-intelligent System] [See page EG-121]	Controls the intake and exhaust camshafts to an optimal valve timing in accordance with the engine condition.
ACIS [Acoustic Control Induction System] [See page EG-127]	The intake air passages are switched according to the engine speed and throttle valve opening angle to provided high performance in all speed ranges.
Air Intake Control System [See page EG-129]	The intake air duct is divided into two areas, and the ECM controls the air intake control valve and the actuator that are provided in one of the areas to reduce the amount of engine noise.
Fuel Pump Control [See page EG-58]	▶Fuel pump operation is controlled by signals from the ECM. ▶The fuel pump is stopped, when the SRS airbag is deployed in a frontal, side, and rear of side collision.
Air Conditioning Cut-off Control	By turning the air conditioning compressor ON or OFF in accordance with the engine condition, drivability is maintained.
Cooling Fan Control [See page EG-130]	The Cooling Fan ECU steplessly controls the speed of the fans in accordance with the engine coolant temperature, vehicle speed, engine speed, and air conditioning operating conditions. As a result, the cooling performance is improved.
Starter Control [Cranking Hold Function] [See page EG-132]	Once the engine switch is pushed, while the brake pedal is depressed, this control continues to operate the starter until the engine started.

(Continued)

System	Outline
Air Fuel Ratio Sensor and Oxygen Sensor Heater Control	Maintains the temperature of the air fuel ratio sensor or oxygen sensor at an appropriate level to increase accuracy of detection of the oxygen concentration in the exhaust gas.
Evaporative Emission Control [See page EG-134]	▶The ECM controls the purge flow of evaporative emission (HC) in the canister in accordance with engine conditions. ▶Approximately five hours after the engine switch has been turned OFF, the ECM operates the canister pump module to detect any evaporative emission leakage occurring between the fuel tank and the canister through changes in the fuel tank pressure.
Active Control Engine Mount [See page EG-104]	The damping characteristic of the front engine mount is controlled variably to reduce idling vibration.
Engine Immobilizer	Prohibits fuel delivery and ignition if an attempt is made to start the engine with an invalid key.
Diagnosis [See page EG-135]	When the ECM detects a malfunction, the ECM diagnoses and memorizes the failed section.
Fail-Safe [See page EG-136]	When the ECM detects a malfunction, the ECM stops or controls the engine according to the data already stored in the memory.

2. Construction

The configuration of the engine control system is as shown in the following chart.

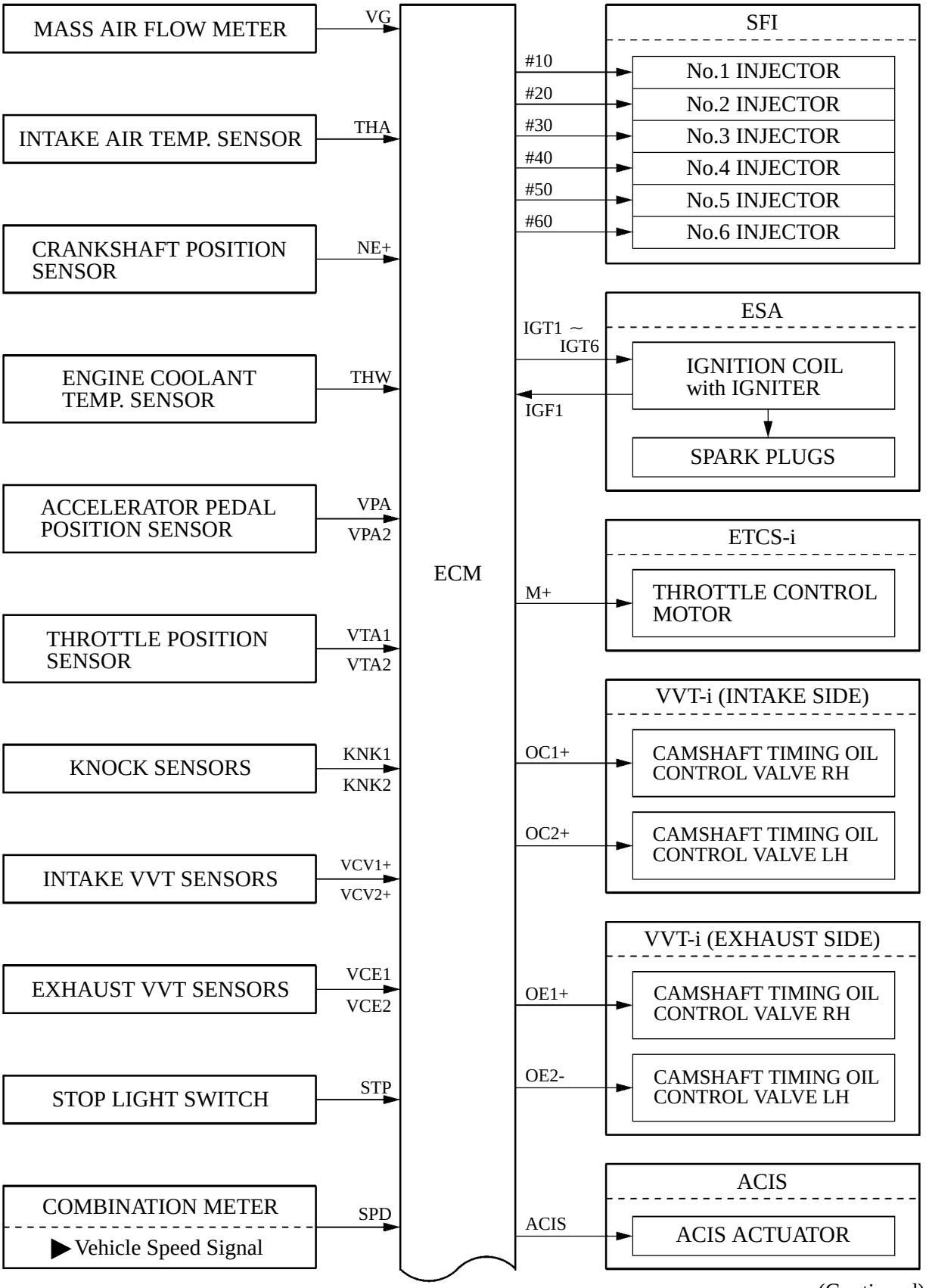

(Continued)

01YEG05TE

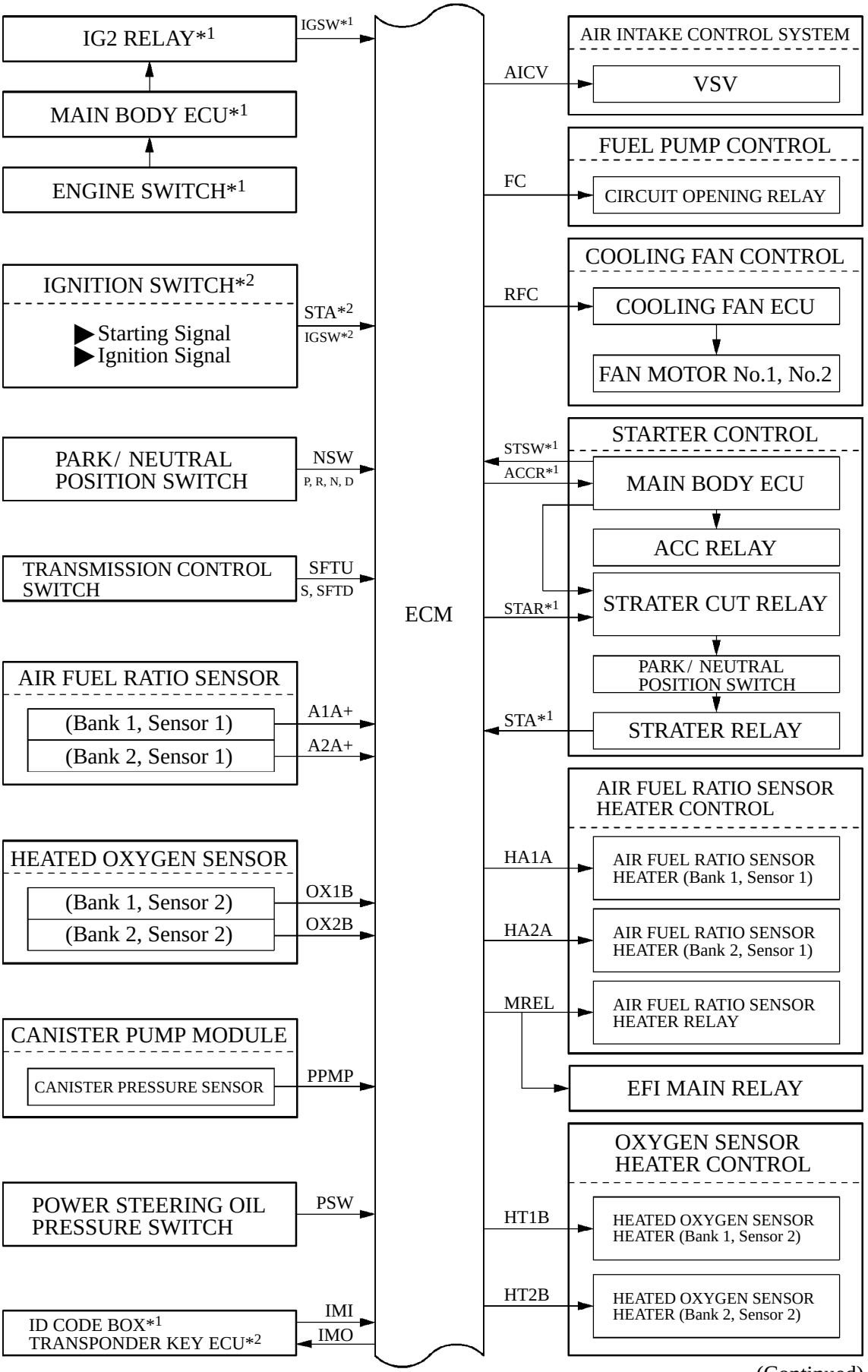

(Continued)

025EG22TE

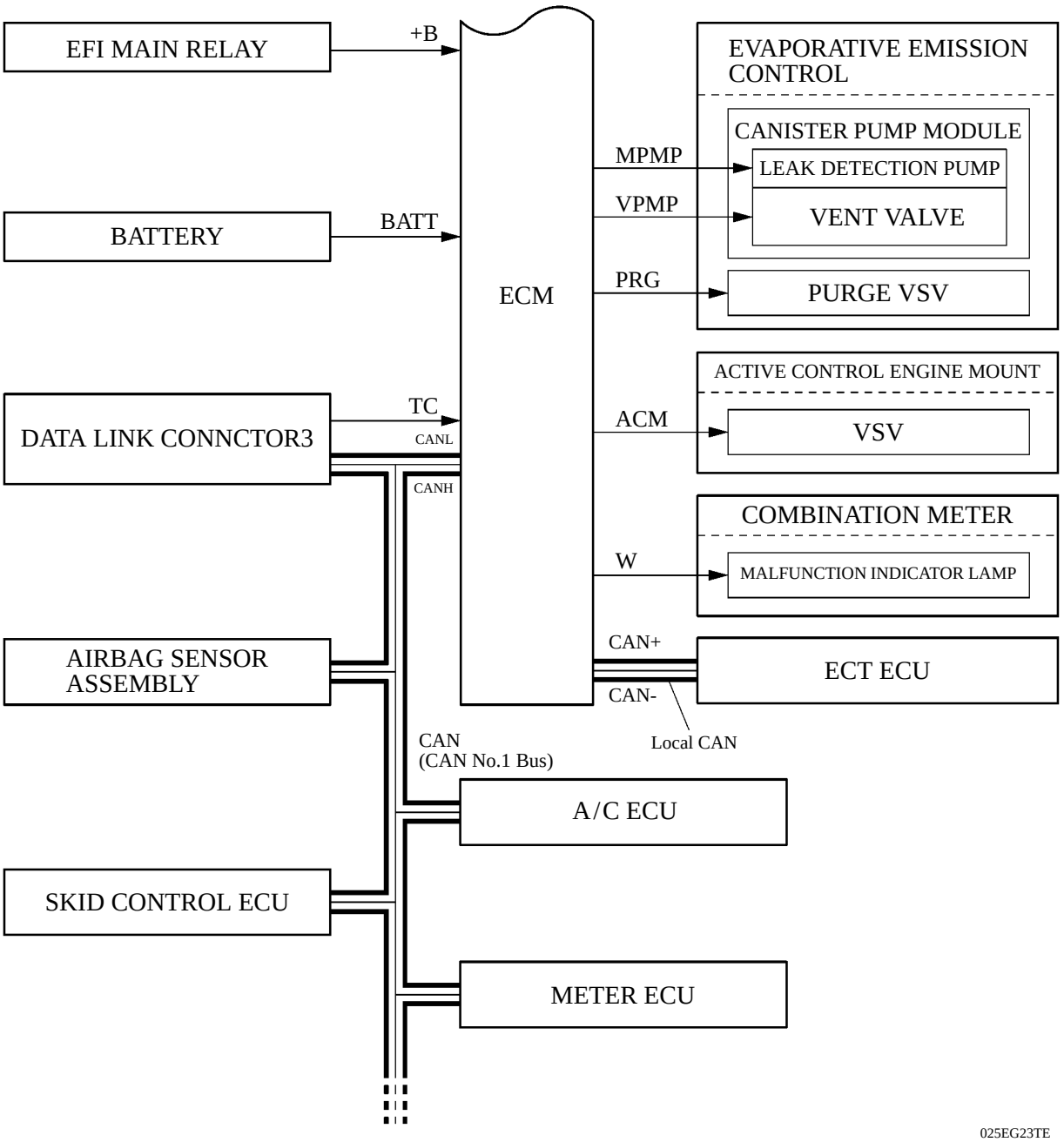

*1: With smart key system
*2: Without smart key system

3. Engine Control System Diagram

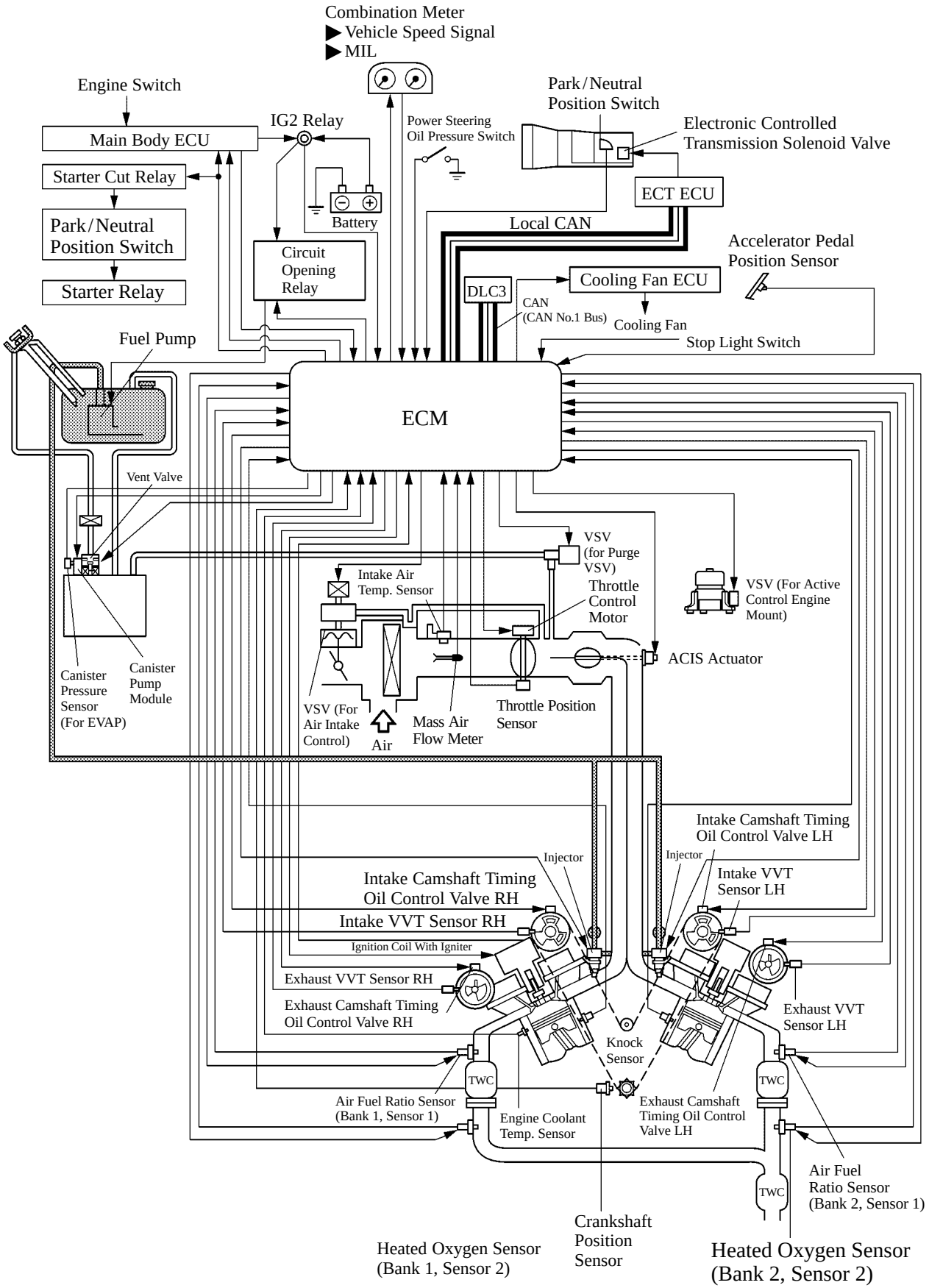

025EG24TE

4. Layout of Main Components

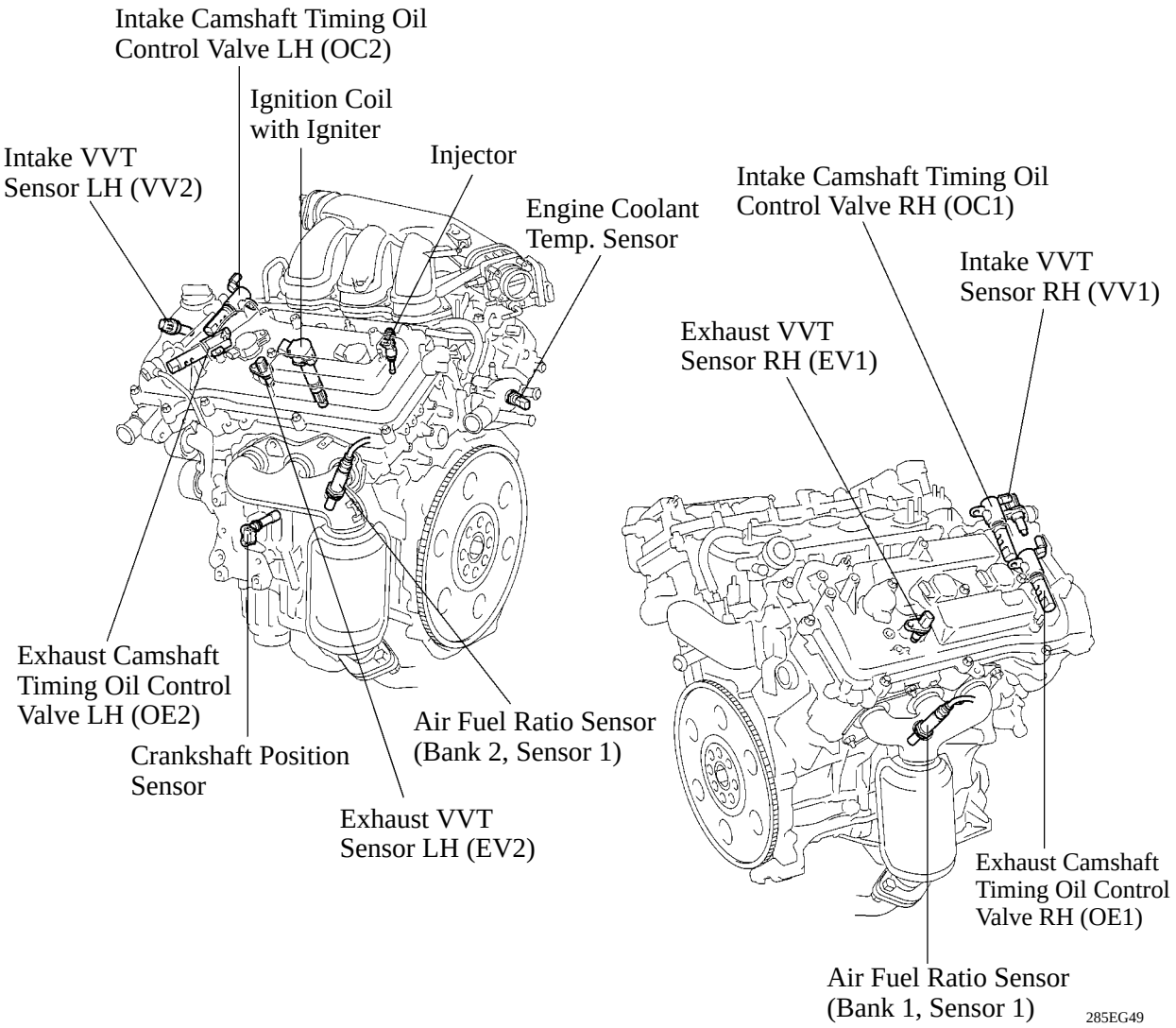

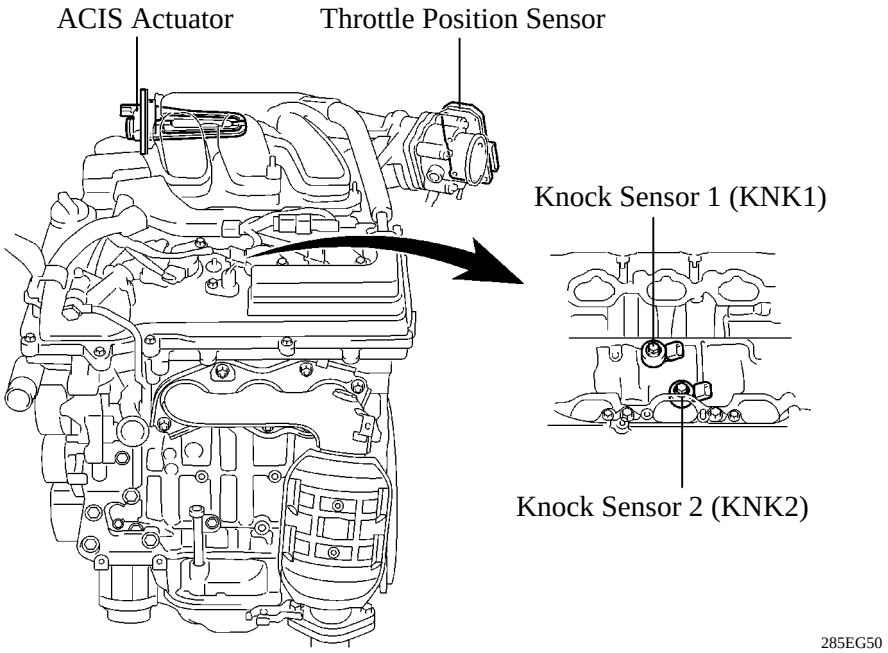

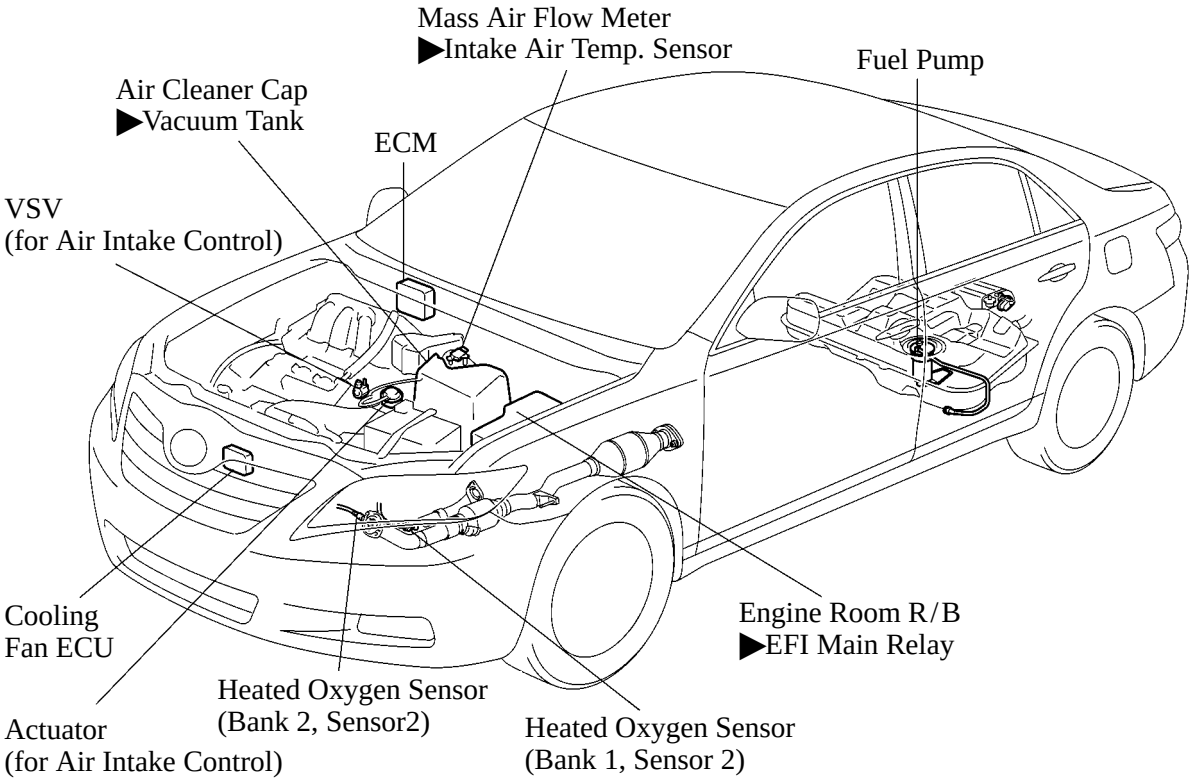
Mass Air Flow Meter
▶Intake Air Temp. Sensor
Fuel Pump
Air Cleaner Cap
▶Vacuum Tank
ECM
VSV
(for Air Intake Control)
Cooling
Fan ECU
Engine Room R/B
▶EFI Main Relay
Heated Oxygen Sensor
(Bank 2, Sensor2)
Actuator
(for Air Intake Control)
Heated Oxygen Sensor
(Bank 1, Sensor 2)

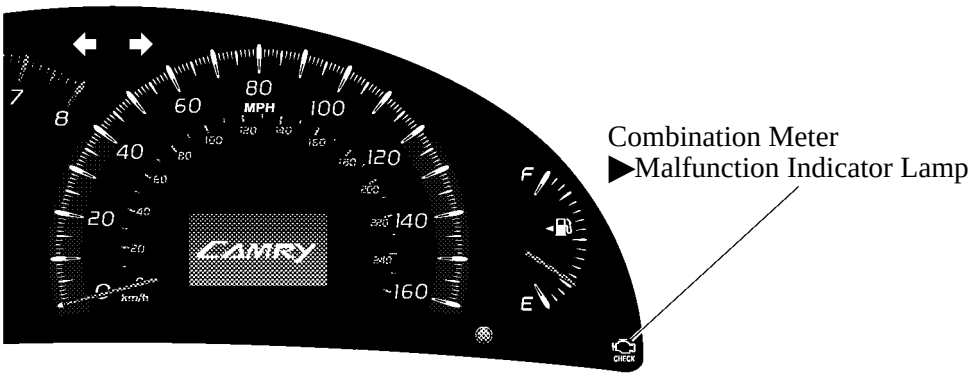
Combination Meter
▶Malfunction Indicator Lamp
MPH
CAMRY
F
E
CHECK

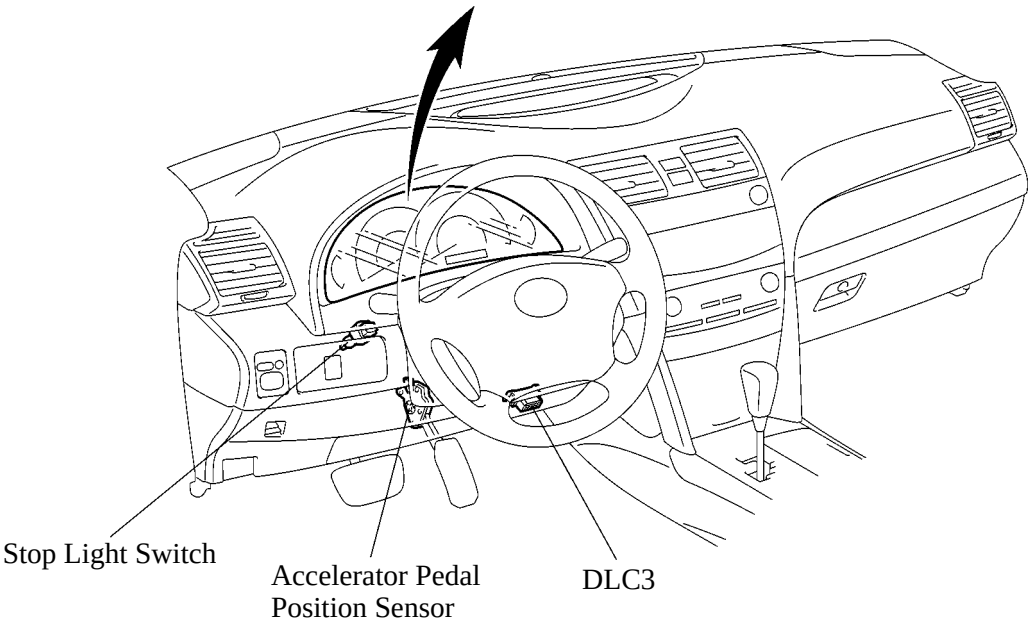
Stop Light Switch
Accelerator Pedal
Position Sensor
DLC3

025EG25Y

5. Main Component of Engine Control System

General

The main components of the 2GR-FE engine control system are as follows:

Components	Outline	Quantity	Function
ECM	32-bit CPU	1	The ECM optimally controls the SFI ESA and ISC to suit the operating conditions of the engine in accordance with the signals provided by the sensors.
Oxygen Sensor (Bank 1, Sensor 2) (Bank 2, Sensor 2)	Cup Type with Heater	2	This sensor detects the oxygen concentration in the exhaust emission by measuring the electromotive force which is generated in the sensor itself. The basic construction and operation of this sensor are the same as in the 2AZ-FE engine. For details, see page EG-47.
Air Fuel Ratio Sensor (Bank 1, Sensor 1) (Bank 2, Sensor 1)	Planar Type with Heater	2	As with the oxygen sensor, this sensor detects the oxygen concentration in the exhaust emission. However, it detects the oxygen concentration in the exhaust emission linearly. The basic construction and operation of this sensor are the same as in the 2AZ-FE engine. For details, see page EG-47.
Mass Air Flow Meter	Hot-wire Type	1	This sensor has a built-in hot-wire to directly detect the intake air mass. The basic construction and operation of this meter are the same as in the 2AZ-FE engine. For details, see page EG-40.
Crankshaft Position Sensor (Rotor Teeth)	Pick-up Coil Type (36-2)	1	This sensor detects the engine speed and performs the cylinder identification.
Intake VVT Sensor LH, RH (Rotor Teeth)	MRE Type (3)	2	This sensor performs the cylinder identification.
Exhaust VVT Sensor LH, RH (Rotor Teeth)	MRE Type (3)	2	This sensor performs the cylinder identification.
Engine Coolant Temperature Sensor	Thermistor Type	1	This sensor detects the engine coolant temperature by means of an internal thermistor.
Intake Air Temperature Sensor	Thermistor Type	1	This sensor detects the intake air temperature by means of an internal thermistor.
Knock Sensor 1,2	Built-in Piezoelectric Type (Flat Type)	2	This sensor detects an occurrence of the engine knocking indirectly from the vibration of the cylinder block caused by the occurrence of engine knocking.
Throttle Position Sensor	No-contact Type	1	This sensor detects the throttle valve opening angle. The basic construction and operation of this sensor are the same as in the 2AZ-FE engine. For details, see page EG-44.
Accelerator Pedal Position Sensor	No-contact Type	1	This sensor detects the amount of pedal effort applied to the accelerator pedal. The basic construction and operation of this sensor are the same as in the 2AZ-FE engine. For details, see page EG-42.
Injector	12-Hole Type	6	The injector is an electromagnetically-operated nozzle which injects fuel in accordance with signals from the ECM.

Crankshaft Position Sensor

The timing rotor of the crankshaft consists of 34 teeth, with 2 teeth missing. The crankshaft position sensor outputs the crankshaft rotation signals every 10▪, and the missing teeth are used to determine the top-dead-center.

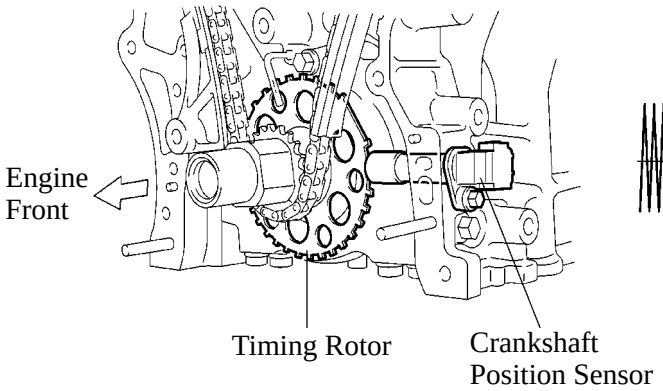

285EG79

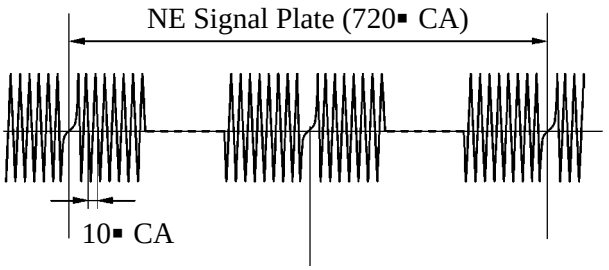

279EG50

Intake and Exhaust VVT Sensors

1) General

The MRE (Magnetic Resistance Element) type intake and exhaust VVT sensors are used. To detect the camshaft position, a timing rotor that is secured to the camshaft in front of the VVT controller is used to generate 6 (3 Hi Output, 3 Lo Output) pulses for every 2 revolutions of the crankshaft.

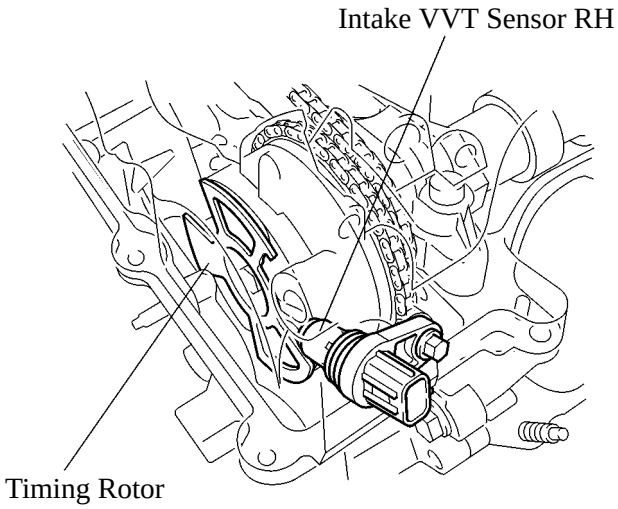

Intake VVT Sensor (Right Bank)

285EG82

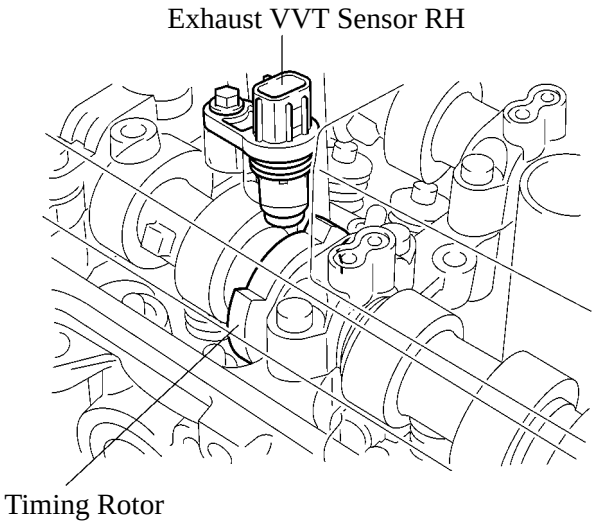

Exhaust VVT Sensor (Right Bank)

285EG83

▶ Sensor Output Waveforms ●

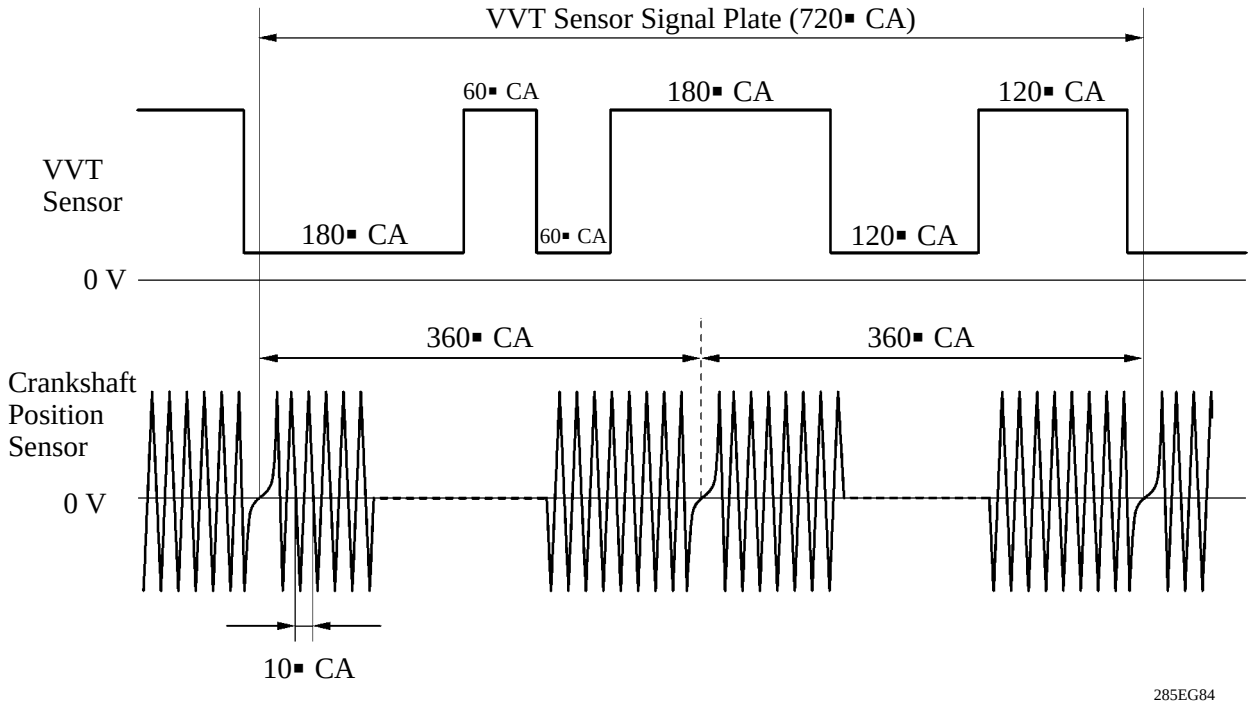

2) MRE Type VVT Sensor

The MRE type VVT sensor consists of an MRE, a magnet and a sensor. The direction of the magnetic field changes due to the different shapes (protruded and non-protruded portions) of the timing rotor, which passes by the sensor. As a result, the resistance of the MRE changes, and the output voltage to the ECM changes to Hi or Lo. The ECM detects the camshaft position based on this output voltage.

The differences between the MRE type VVT sensor and the pickup coil type VVT sensor used on the conventional model are as follows.

Item	Sensor Type	
	MRE	Pick-up Coil
Signal Output	Constant digital output starts from low engine speeds.	Analog output changes with the engine speed.
Camshaft Position Detection	Detection is made by comparing the NE signals with the Hi/Lo output switch timing due to the protruded/non-protruded portions of the timing rotor, or made based on the number of the input NE signals during Hi/Lo outputs.	Detection is made by comparing the NE signals with the change of waveform that is output when the protruded portion of the timing rotor passes.

▶ Wiring Diagram ●

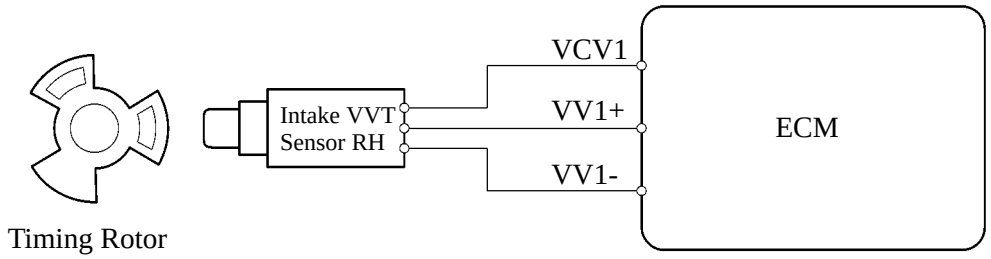

Intake VVT Sensor RH

271EG160

▶ MRE Type and Pick-up Coil Type Output Waveform Image Comparison ●

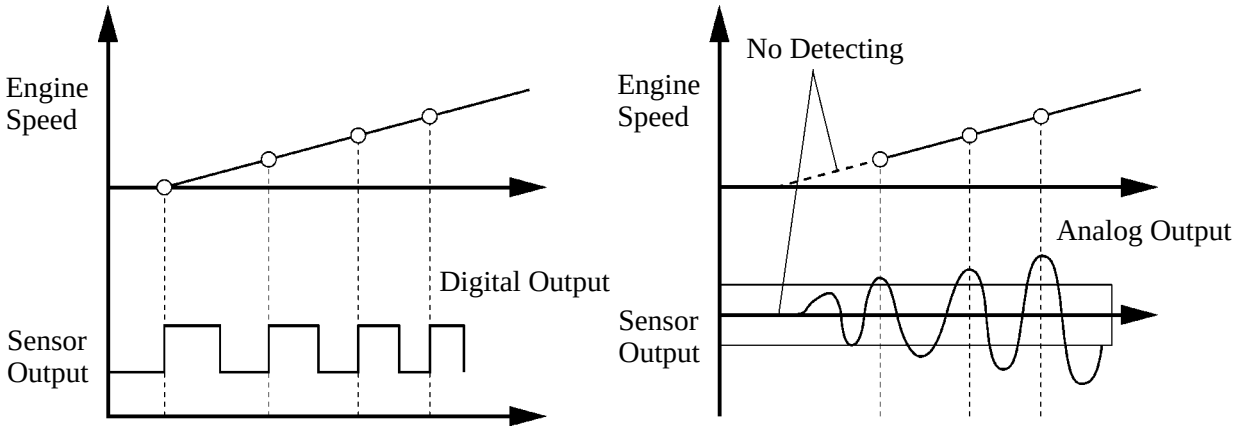

MRE Type **Pick-up Coil Type**

232CH41

Throttle Position Sensor

The no-contact type throttle position sensor uses a Hall IC, which is mounted on the throttle body.

The Hall IC is surrounded by a magnetic yoke. The Hall IC converts the changes that occur in the magnetic flux at that time into electrical signals and outputs them in the form of a throttle valve effort to the ECM.

The Hall IC contains circuits for the main and sub signals. It converts the throttle valve opening angles into electric signals with two differing characteristics and outputs them to the ECM.

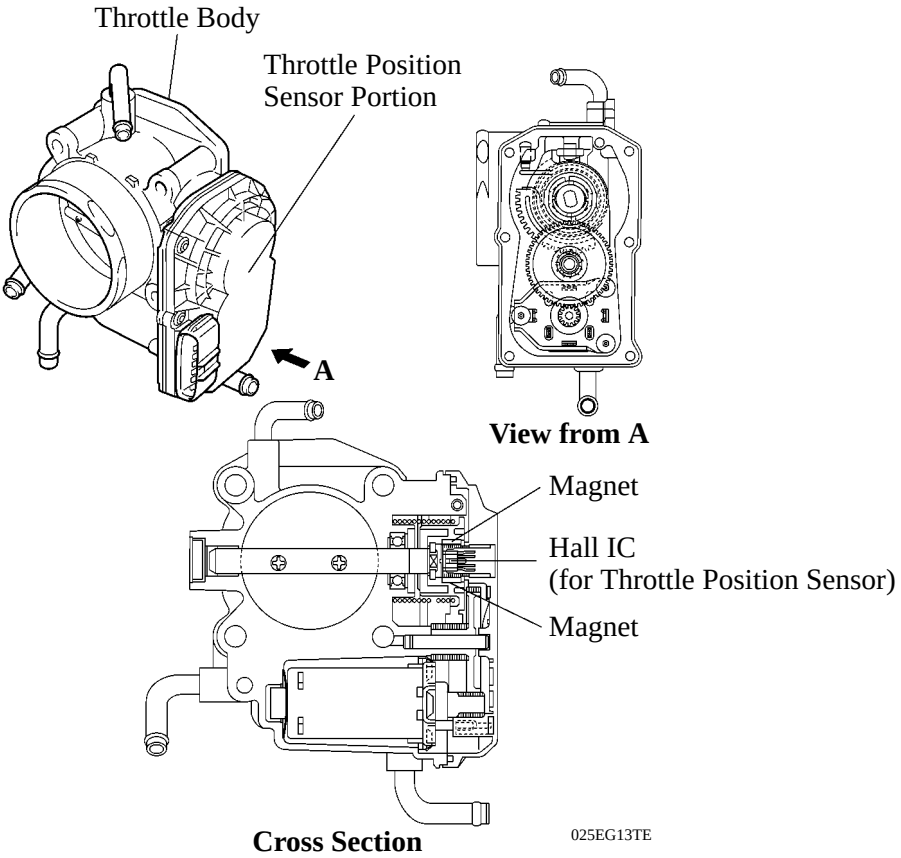

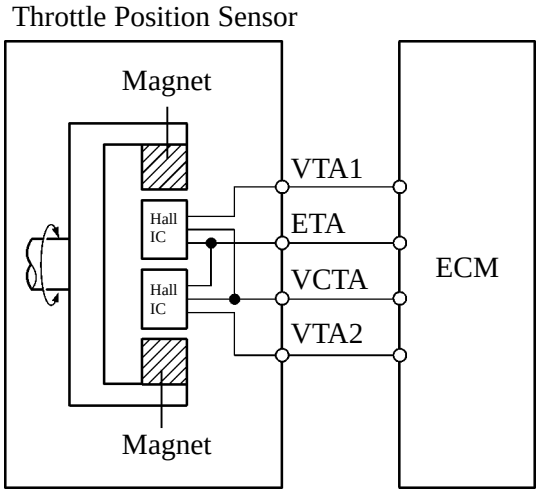

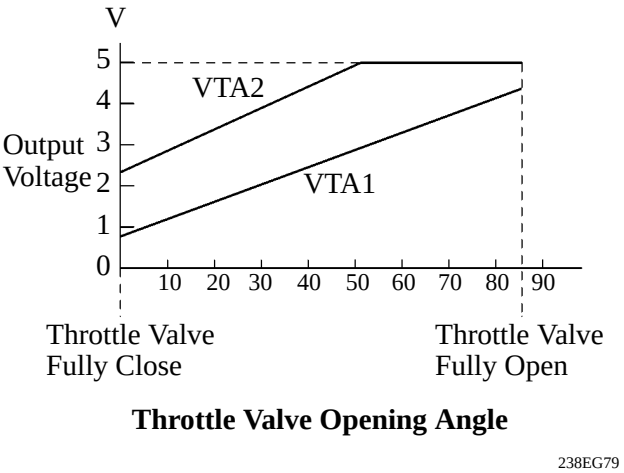

Service Tip

The inspection method differs from the conventional throttle position sensor because this sensor uses a Hall IC. For details, refer to the 2007 Camry Repair Manual (Pub. No. RM0250U).

Knock Sensor (Flat Type)

1) General

In the conventional type knock sensor (resonant type), a vibration plate, which has the same resonance point as the knocking frequency of the engine, is built in and can detect the vibration in this frequency band.
On the other hand, a flat type knock sensor (non-resonant type) has the ability to detect vibration in a wider frequency band from about 6 kHz to 15 kHz, and has the following features:

The engine knocking frequency will change a bit depending on the engine speed. The flat type knock sensor can detect vibration even when the engine knocking frequency is changed. Thus the vibration detection ability is increased compared to the conventional type knock sensor, and a more precise ignition timing control is possible.

—·— : Conventional Type
——— : Flat Type

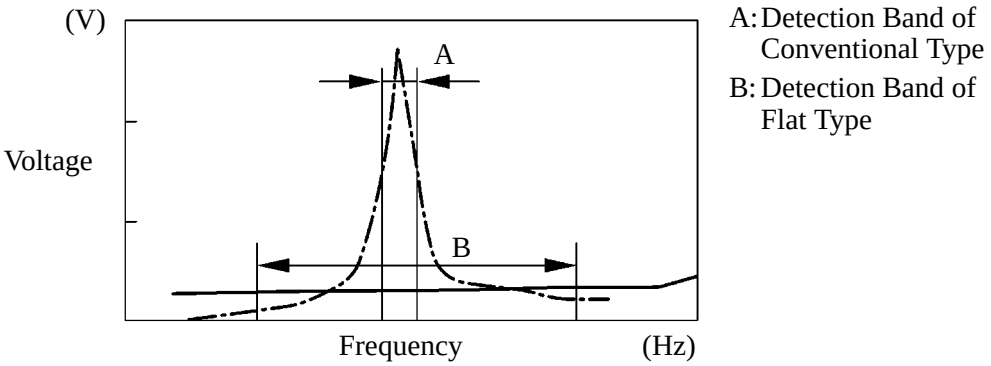

Characteristic of Knock Sensor

214CE04

2) Construction

The flat type knock sensor is installed on the engine through the stud bolt installed on the cylinder block. For this reason, a hole for the stud bolt is running through in the center of the sensor.

Inside of the sensor, a steel weight is located on the upper portion and a piezoelectric element is located under the weight through the insulator.

The open/short circuit detection resistor is integrated.

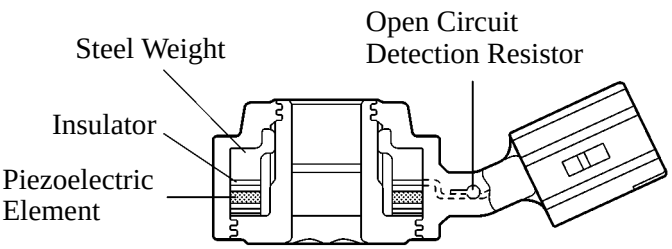

Flat Type Knock Sensor
(Non-Resonant Type)

214CE01

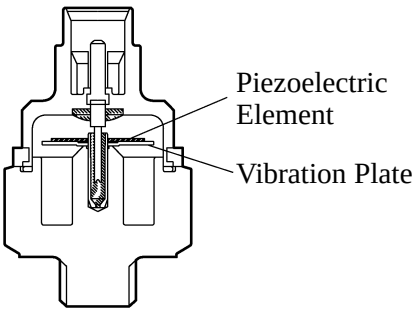

Conventional Type Knock Sensor
(Resonant Type)

214CE02

3) Operation

The knocking vibration is transmitted to the steel weight and its inertia applies pressure to the piezoelectric element. The action generates electromotive force.

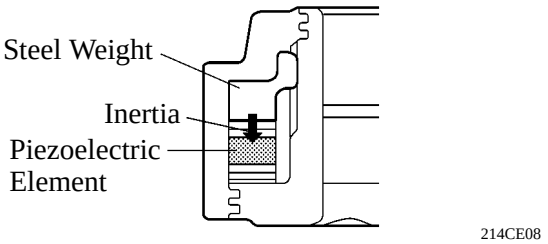

4) Open/Short Circuit Detection Resistor

During the ignition is ON, the open/short circuit detection resistor in the knock sensor and the resistor in the ECM keep the voltage at the terminal KNK1 of engine constant.
An IC (Integrated Circuit) in the ECM is always monitoring the voltage of the terminal KNK1. If the open/short circuit occurs between the knock sensor and the ECM, the voltage of the terminal KNK1 will change and the ECM detects the open/short circuit and stores DTC (Diagnostic Trouble Code).

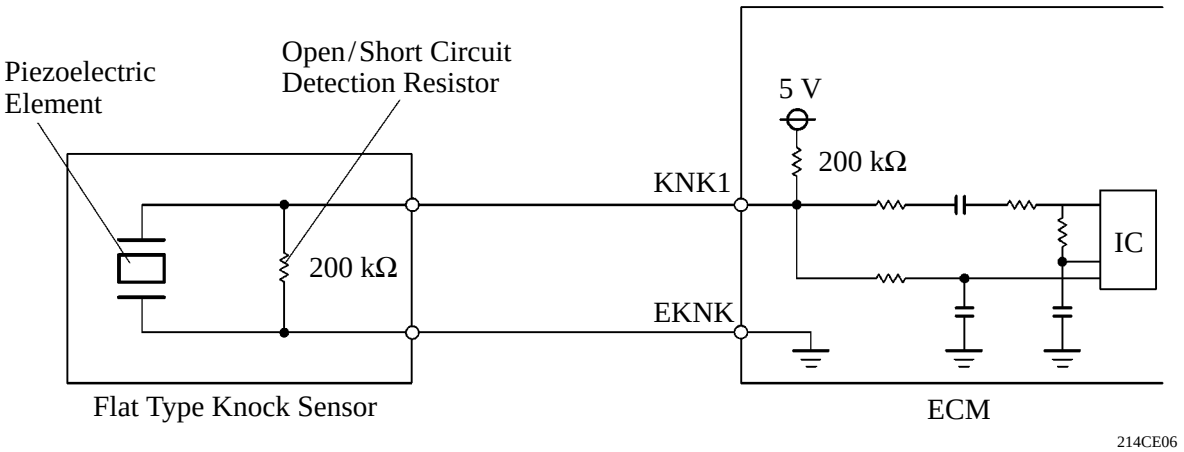

Service Tip

These knock sensors are mounted in the specific directions and angles as illustrated. To prevent the right and left bank connectors from being interchanged, make sure to install each sensor in its prescribed direction.

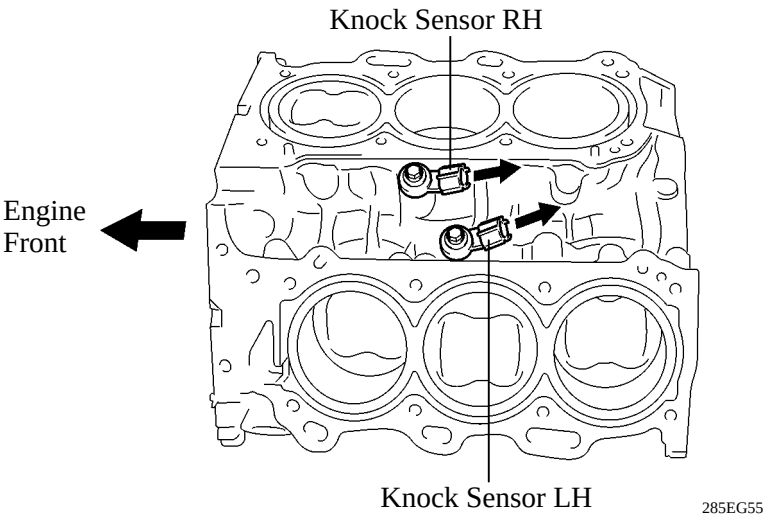

6. Dual VVT-i (Variable Valve Timing-intelligent) System

General

The dual VVT-i system is designed to control the intake and exhaust camshafts within a range of 40▪ and 35▪ respectively (of Crankshaft Angle) to provide valve timing that is optimally suited to the engine condition. This improves torque in all the speed ranges as well as increasing fuel economy, and reducing exhaust emissions.

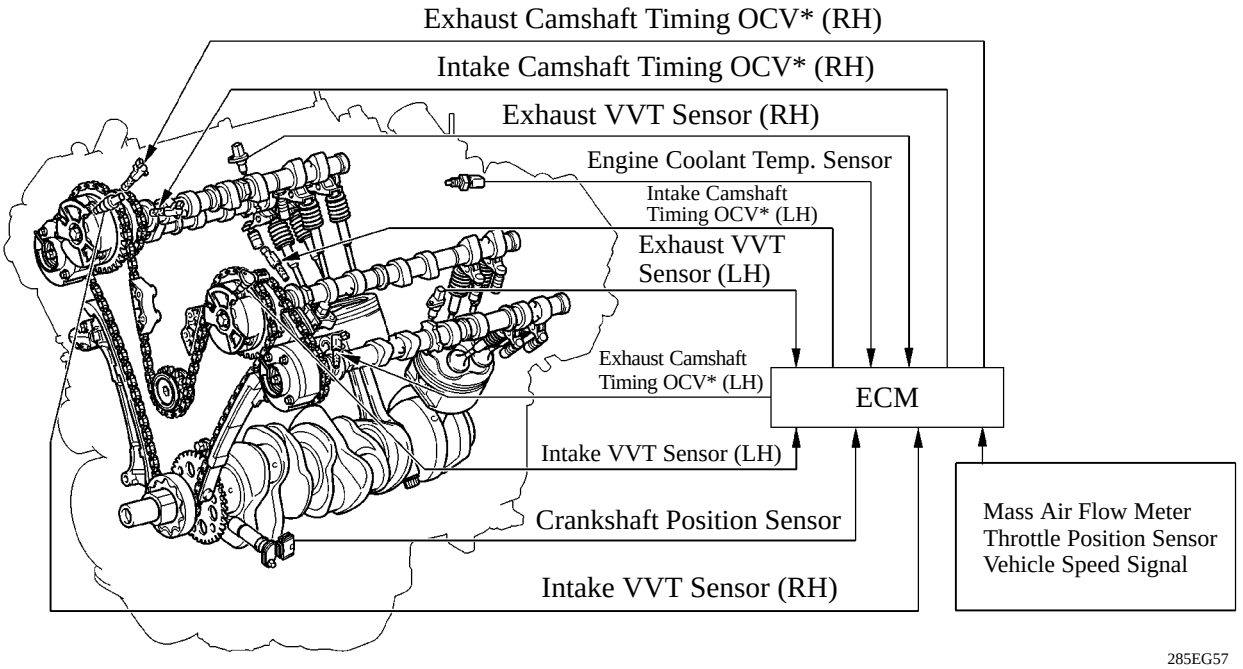

*: Oil Control Valve

By using the engine speed, intake air volume, throttle position and engine coolant temperature, the ECM calculates optimal valve timing for each driving condition and controls the camshaft timing oil control valve. In addition, the ECM uses signals from the camshaft position sensor and the crankshaft position sensor to detect the actual valve timing, thus providing feedback control to achieve the target valve timing.

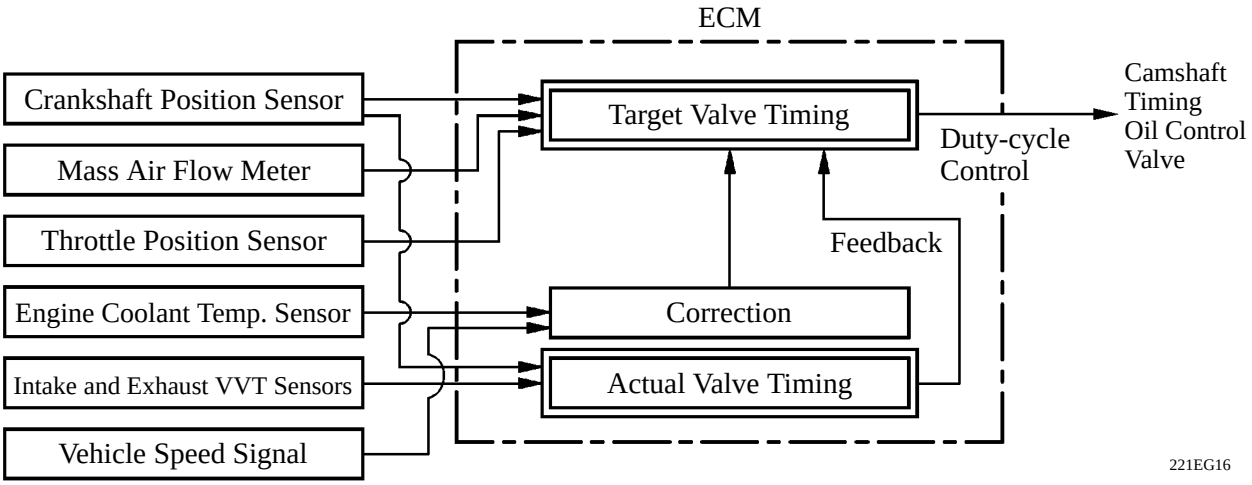

Effectiveness of the VVT-i System

Operation State	Objective	Effect
During Idling	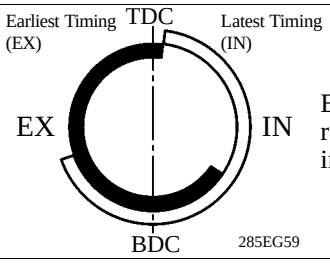 Eliminating overlap to reduce blow back to the intake side.	Stabilized idling rpm Better fuel economy
At Light Load	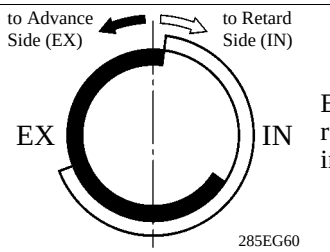 Eliminating overlap to reduce blow back to the intake side.	Ensured engine stability
At Medium Load	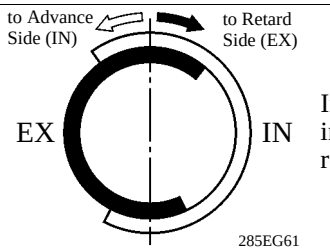 Increasing overlap increases internal EGR, reducing pumping loss.	Better fuel economy Improved emission control
In Low to Medium Speed Range with Heavy Load	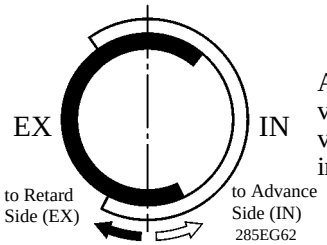 Advancing the intake valve close timing for volumetric efficiency improvement.	Improved torque in low to medium speed range
In High Speed Range with Heavy Load	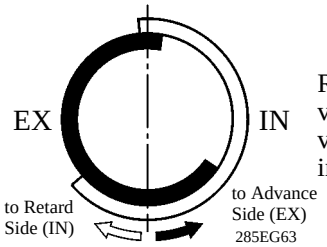 Retarding the intake valve close timing for volumetric efficiency improvement.	Improved output
At Low Temperatures	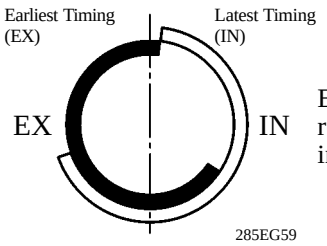 Eliminating overlap to reduce blow back to the intake side.	Stabilized fast idle rpm Better fuel economy
Upon Starting Stopping the Engine	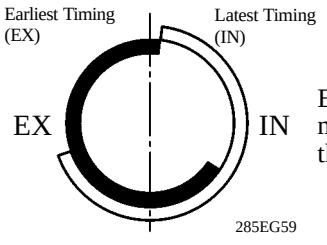 Eliminating overlap to minimize blow back to the intake side.	Improved startability

Construction

1) VVT-i Controller

This controller consists of the housing driven from the timing chain and the vane coupled with the intake and exhaust camshafts.

The intake side has used a VVT-i controller with 3 vanes, and the exhaust side has used one with 4 vanes.

When the engine stops, the intake side VVT-i controller is locked on the most retarded angle side by the lock pin, and the exhaust side controller is locked on the most advanced angle side. This ensures excellent engine startability.

The oil pressure sent from the advance or retard side path at the intake and exhaust camshaft causes rotation in the VVT-i controller vane circumferential direction to vary the intake valve timing continuously.

An advanced angle assist spring is provided on the exhaust side VVT-i controller. This helps to apply torque in the advanced angle direction so that the vane lock pin securely engages with the housing when the engine stops.

▶ **Intake Side VVT-i Controller ●**

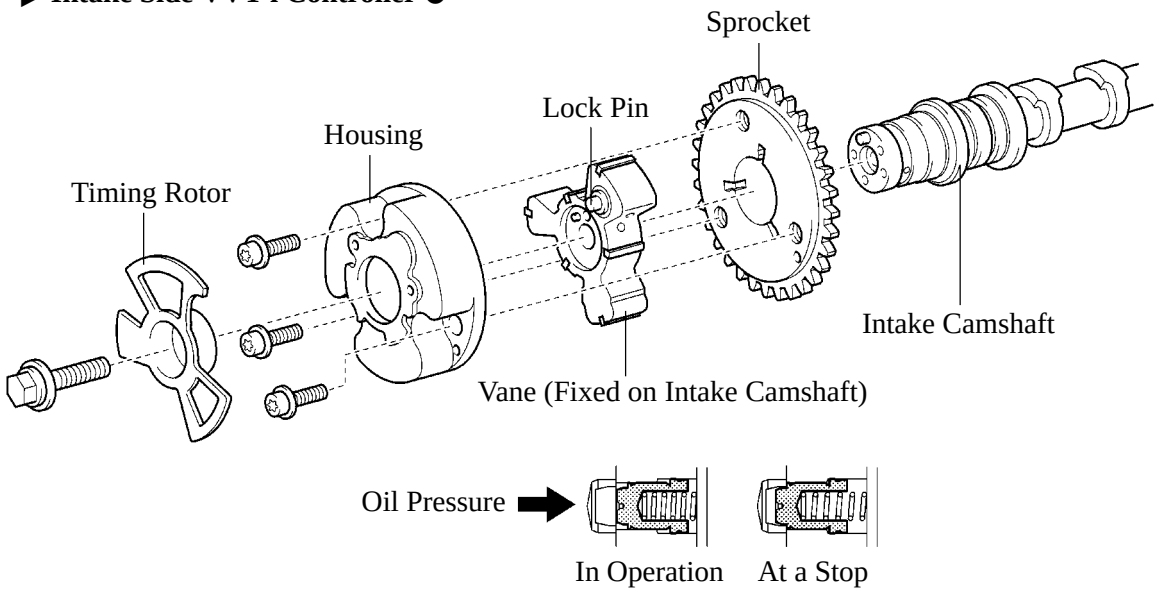

Lock Pin

271EG93

▶ **Exhaust Side VVT-i Controller ●**

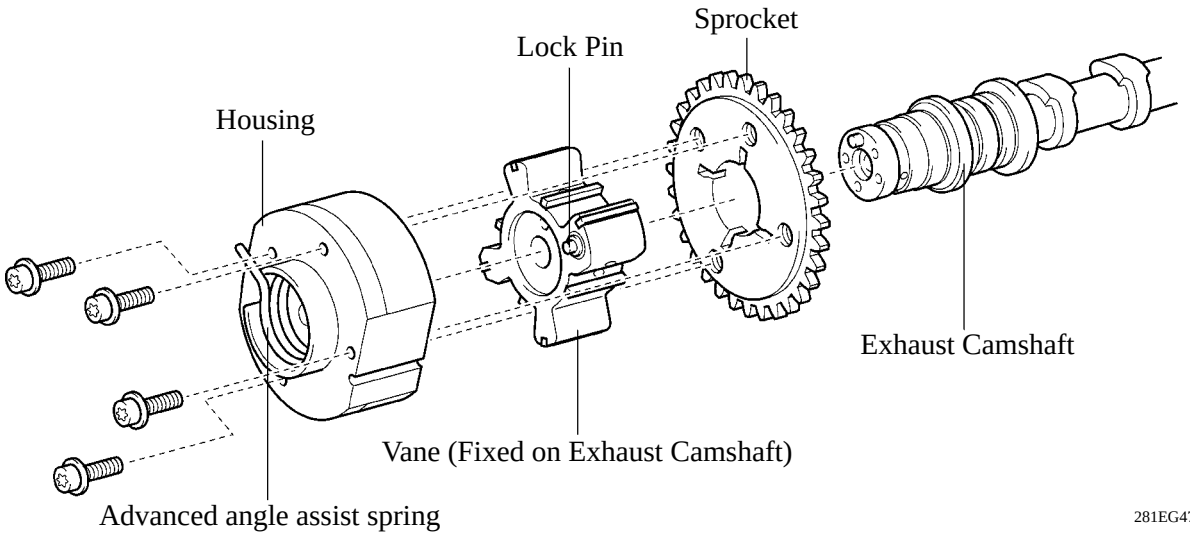

281EG47

2) Camshaft Timing Oil Control Valve

This camshaft timing oil control valve controls the spool valve using duty-cycle control from the ECM. This allows hydraulic pressure to be applied to the VVT-i controller advance or retard side. When the engine is stopped, the camshaft timing oil control valve is in the most retard position.

▶ Intake Camshaft Timing Oil Control Valve ●

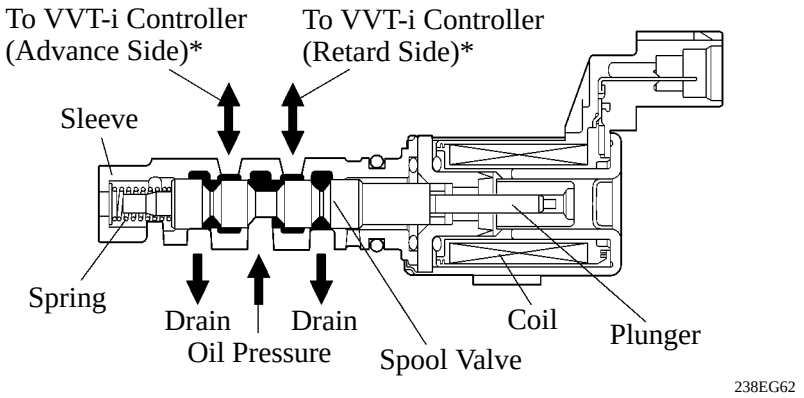

*: The advance and retard sides of the exhaust side oil control valve are reverse of the intake side.

Operation

1) Advance

When the camshaft timing oil control valve is positioned as illustrated below by the advance signals from the ECM, the resultant oil pressure is applied to the timing advance side vane chamber to rotate the camshaft in the timing advance direction.

▶ Intake Side ●

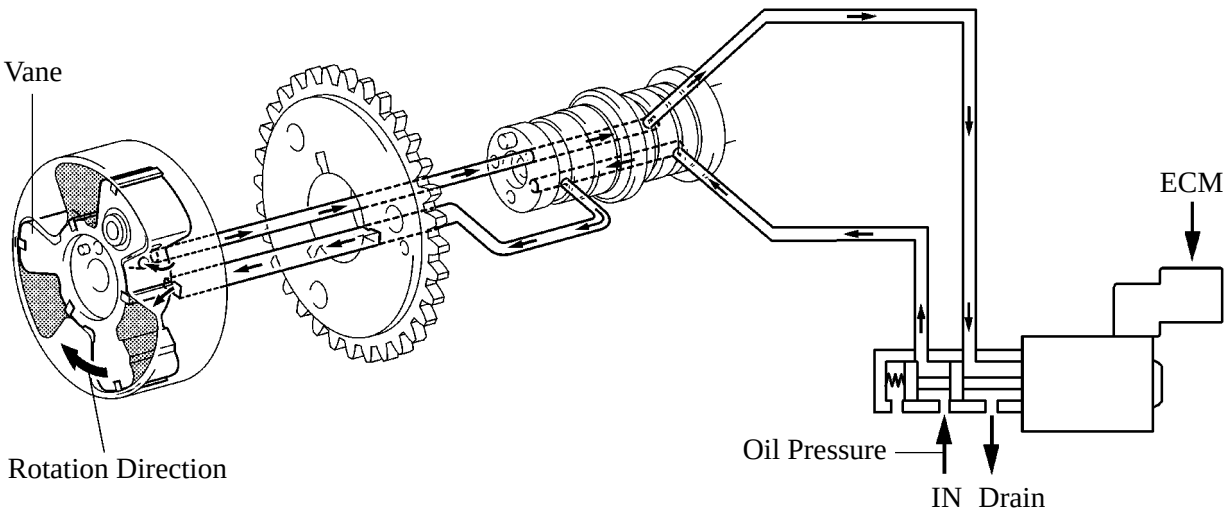

238EG63

▶ Exhaust Side ●

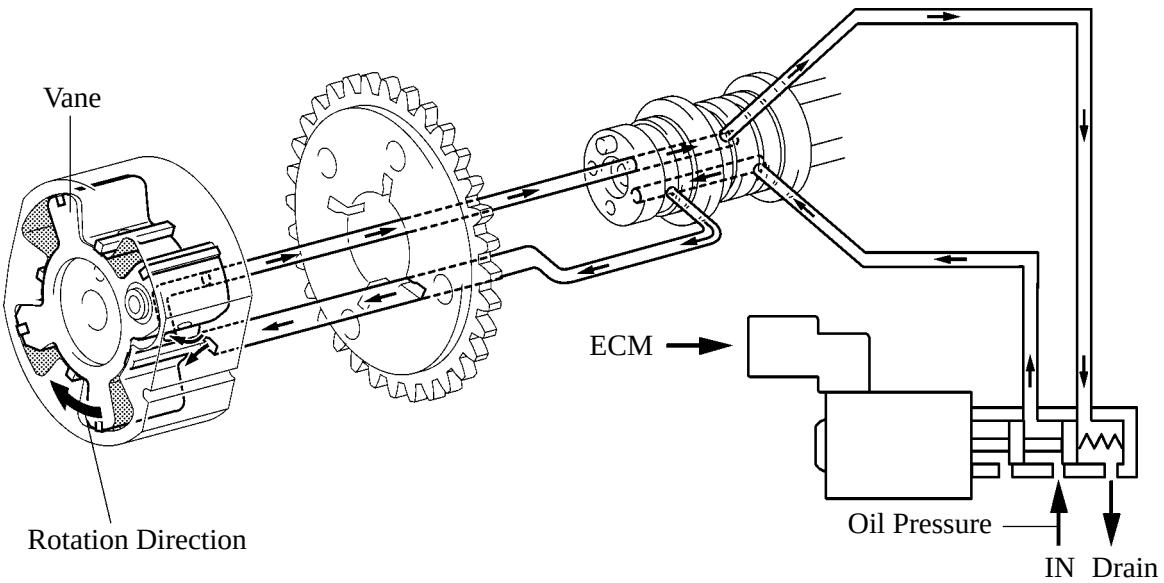

281EG48

2) Retard

When the camshaft timing oil control valve is positioned as illustrated below by the retard signals from the ECM, the resultant oil pressure is applied to the timing retard side vane chamber to rotate the camshaft in the timing retard direction.

▶ Intake Side ●

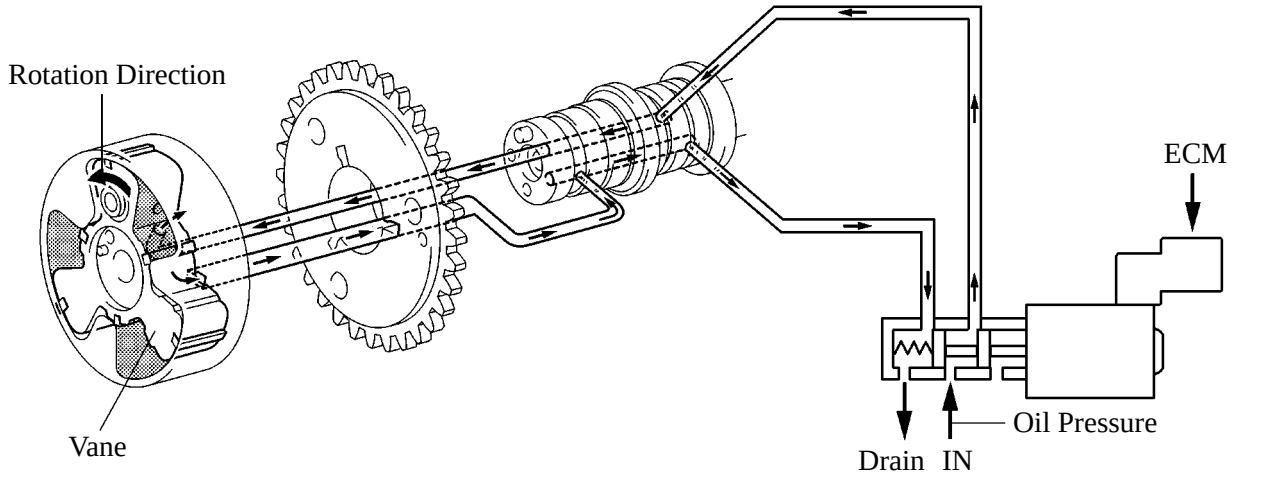

238EG64

▶ Exhaust Side ●

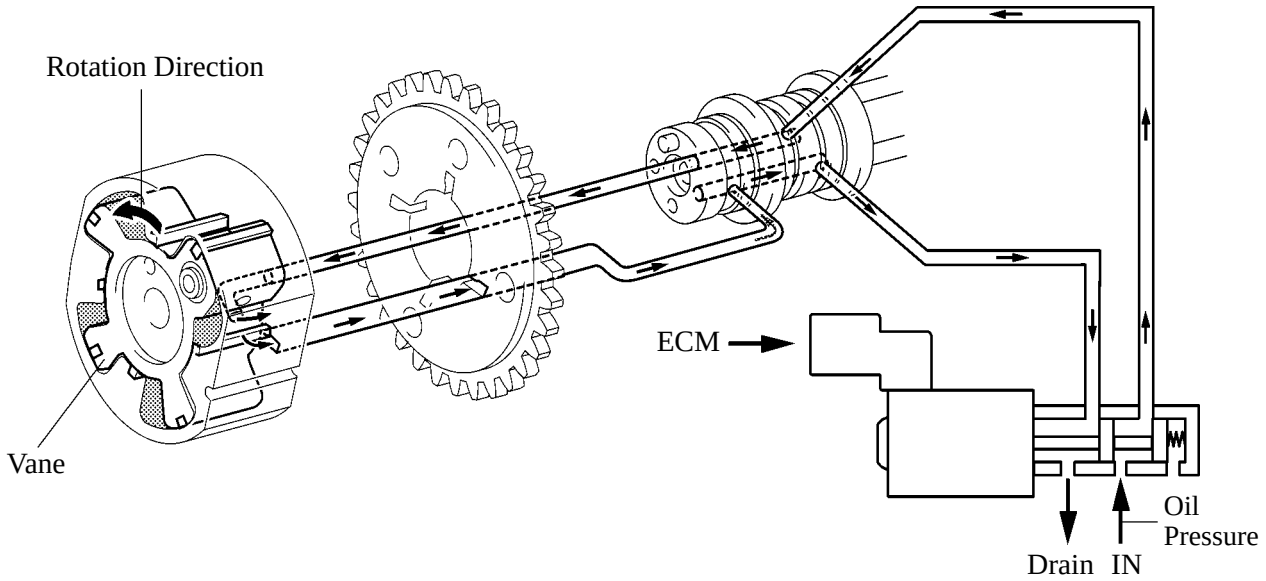

281EG49

3) Hold

After reaching the target timing, the valve timing is held by keeping the camshaft timing oil control valve in the neutral position unless the traveling state changes.
This adjusts the valve timing at the desired target position and prevents the engine oil from running out when it is unnecessary.

7. ACIS (Acoustic Control Induction System)

General

The ACIS is realized by using a bulkhead to divide the intake manifold into 2 stages, with an intake air control valve in the bulkhead being opened and closed to vary the effective length of the intake manifold in accordance with the engine speed and throttle valve opening angle. This increases the power output in all ranges from low to high speed.

▶ System Diagram ●

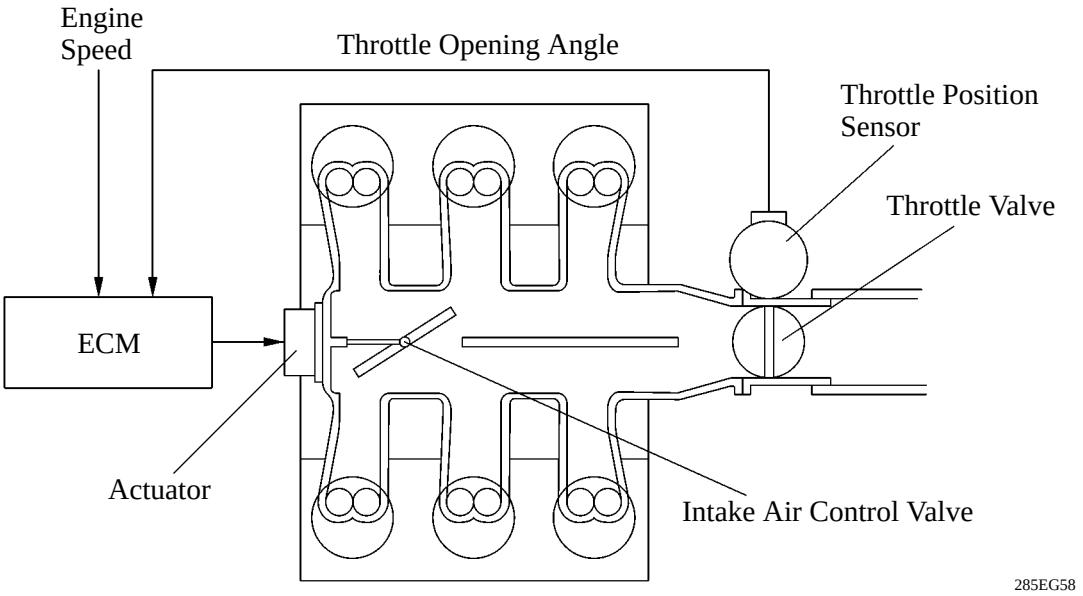

Construction

1) Intake Air Control Valve

The intake air control valve, which is provided in the intake air chamber, open and close to change the effective length of the intake manifold in 2 stages.

2) Actuator (Motor)

The actuator activates the intake air control valve based on signals from the ECM.

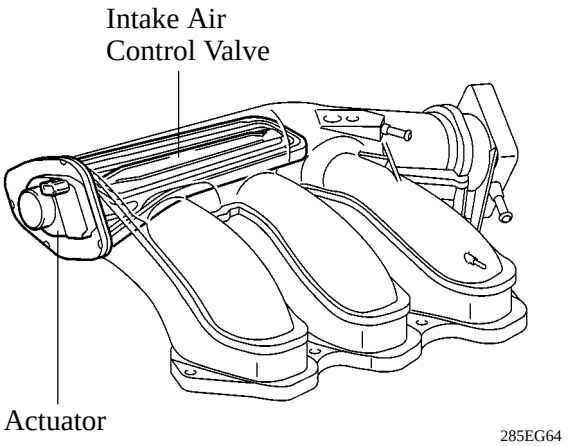

Operation

1) When the Intake Air Control Valve Closes

While the engine is running at middle speed under high load, the ECM controls the actuator to close the control valve. As a result, the effective length of the intake manifold is lengthened and the intake air efficiency, in the medium speed range, is improved due to the dynamic effect of the intake air, thereby increasing power output.

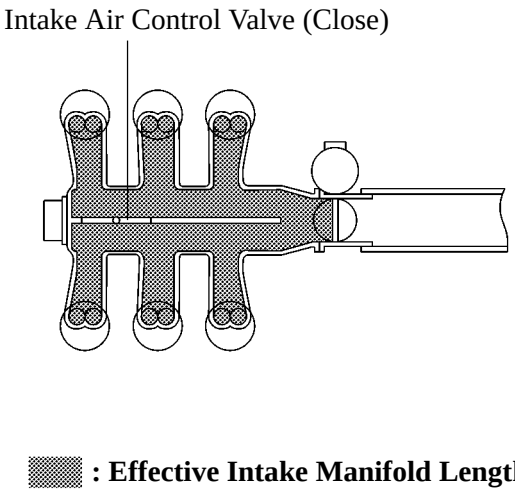

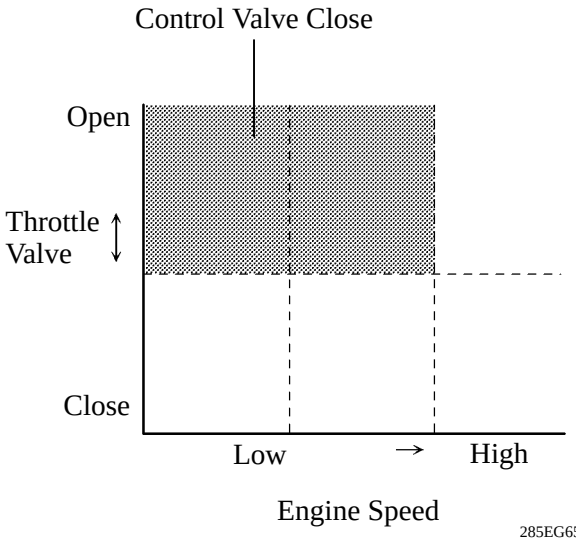

285EG65

2) When the Intake Air Control Valve Open

Under any condition except when the engine is running at middle speed under high load, the ECM controls the actuator to open the control valve. When the control valve is open, the effective length of the intake air chamber is shortened and peak intake efficiency is shifted to the low-to-high engine speed range, thus providing greater output at low-to-high engine speeds.

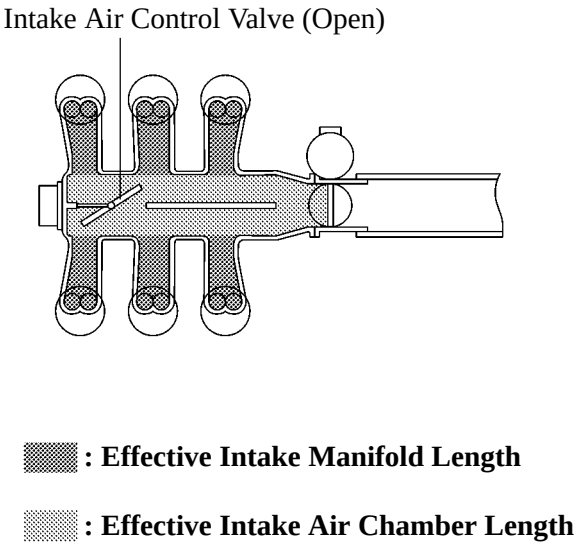

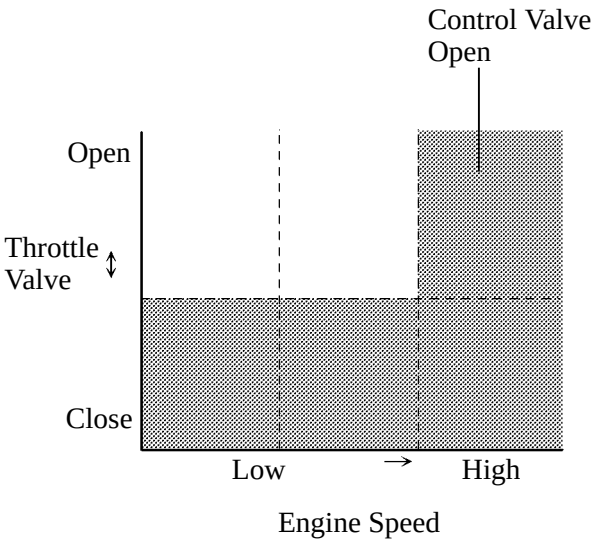

285EG66

8. Air Intake Control System

General

The system has a dual path design for air intake. An air intake control valve and actuator control the air flow path.
As a result, a reduction in intake noise in the low-speed range and an increase in the power output in the high-speed range is realized.

▶ Layout of Components ●

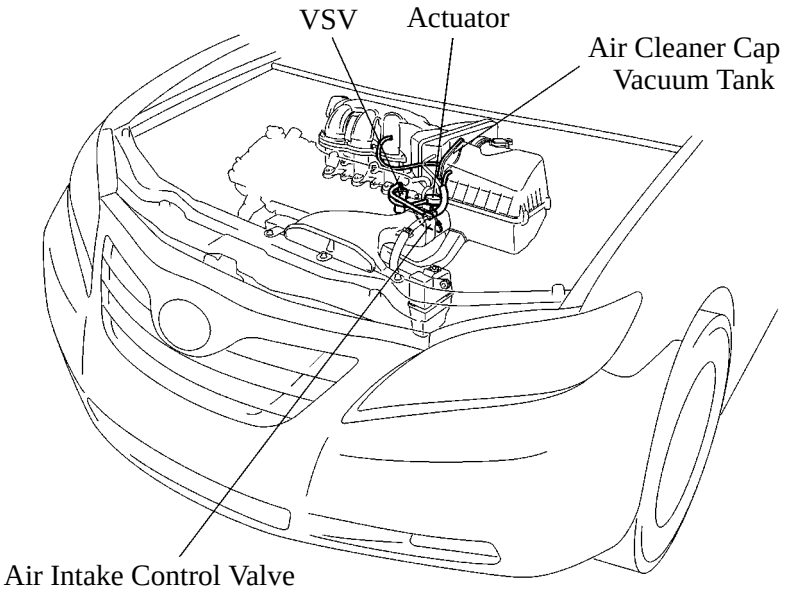

Operation

When the engine is operating in the low- to mid-speed range, this control operates the air intake control valve to close one side of the air cleaner inlet. As a result, the intake area has been minimized and the intake noise is reduced.

When the engine is operating in the high-speed range, this control operates the air intake control valve to open both sides of the air cleaner inlet. As a result, the intake area has been maximized and the intake efficiency is improved.

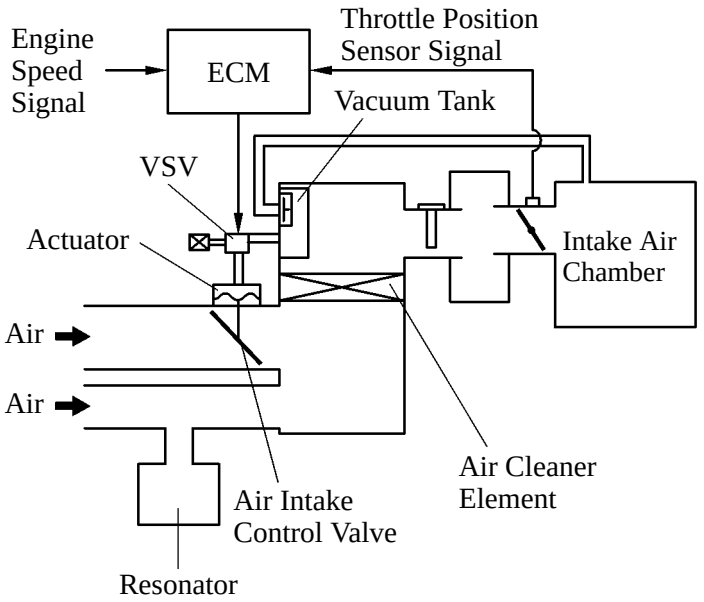

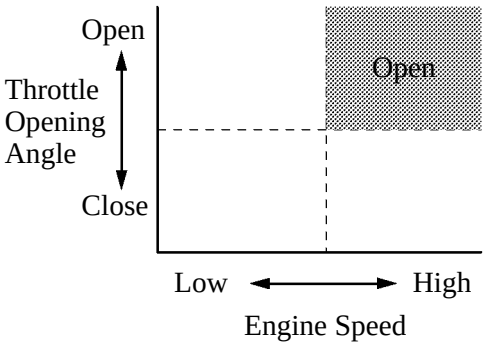

Air Intake Control Valve Condition

285EG68

9. Cooling Fan Control System

General

A cooling fan control system is used. To achieve an optimal fan speed in accordance with the engine coolant temperature, vehicle speed, engine speed, and air conditioning operating conditions, the ECM calculates the proper fan speed and sends the signals to the cooling fan ECU. Upon receiving the signals from the ECM, the cooling fan ECU actuates the fan motors.

▶ Wiring Diagram ●

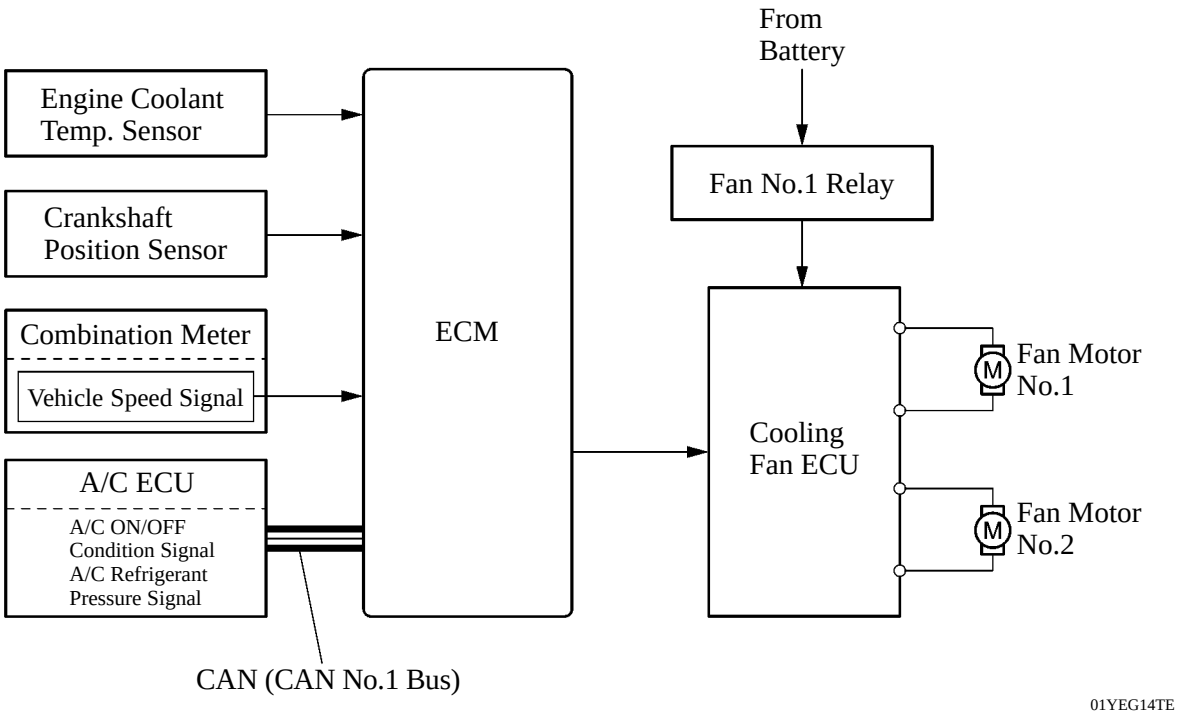

Operation

The ECM controls the cooling fan speed in accordance with the value of the engine coolant temperature, as shown in the graph below. When the engine coolant temperature is higher than a specific value, the control differs depending on whether the engine speed is at idling and below or more.

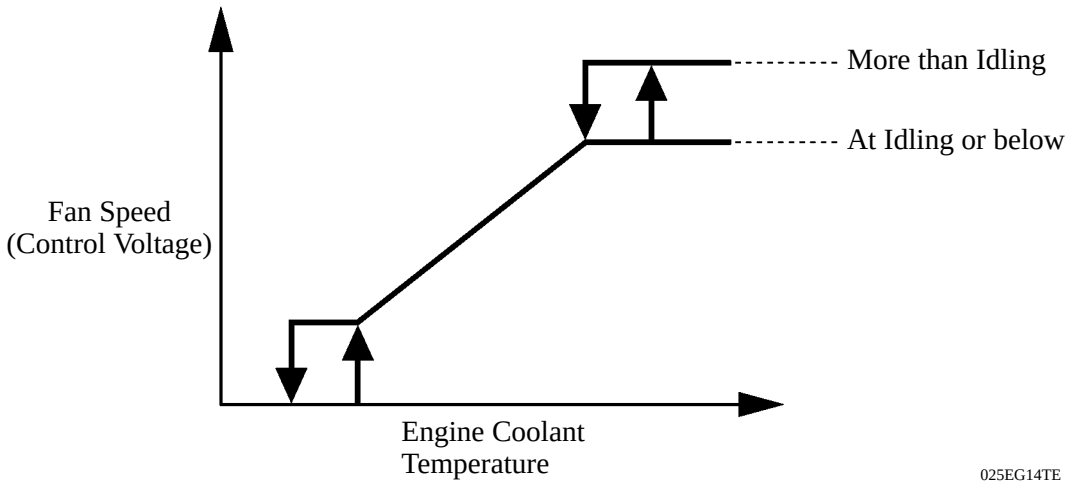

The ECM controls the cooling fan speed in accordance with the value of the air conditioning refrigerant pressure, as shown in the graph below. When the air conditioning refrigerant pressure is higher than a specific value, the control differs depending on whether the engine speed is at low speeds and below or more.

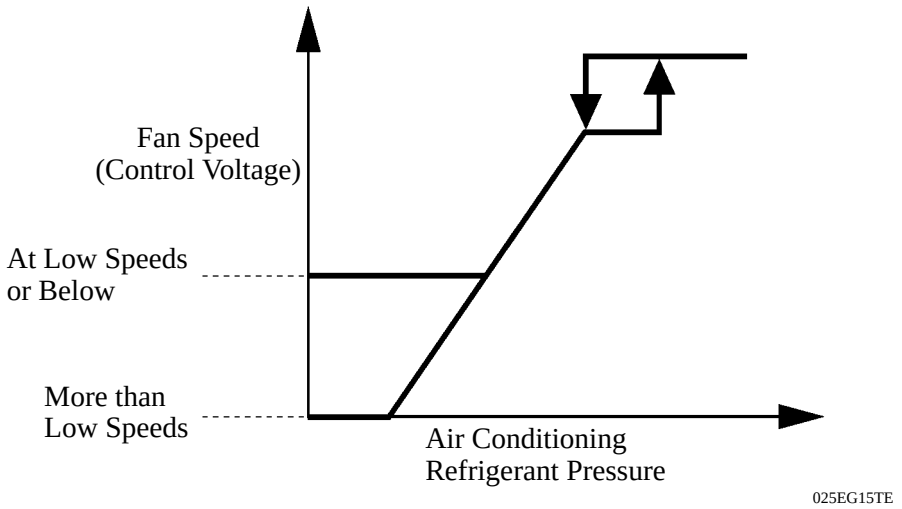

10. Cranking Hold Function (Models with Smart Key System)

General

Once the engine switch is pressed, this function continues to operate the starter until the engine has started, provided that the brake pedal is depressed. This prevents starting failure and the engine from being cranked after it has started.

When the ECM detects a start signal from the main body ECU, this system monitors the engine speed (NE) signal and continues to operate the starter until it has determined that the engine has started. Furthermore, even if the ECM detects a start signal from the main body ECU, this system will not operate the starter if the ECM has determined that the engine has already started.

▶ System Diagram ●

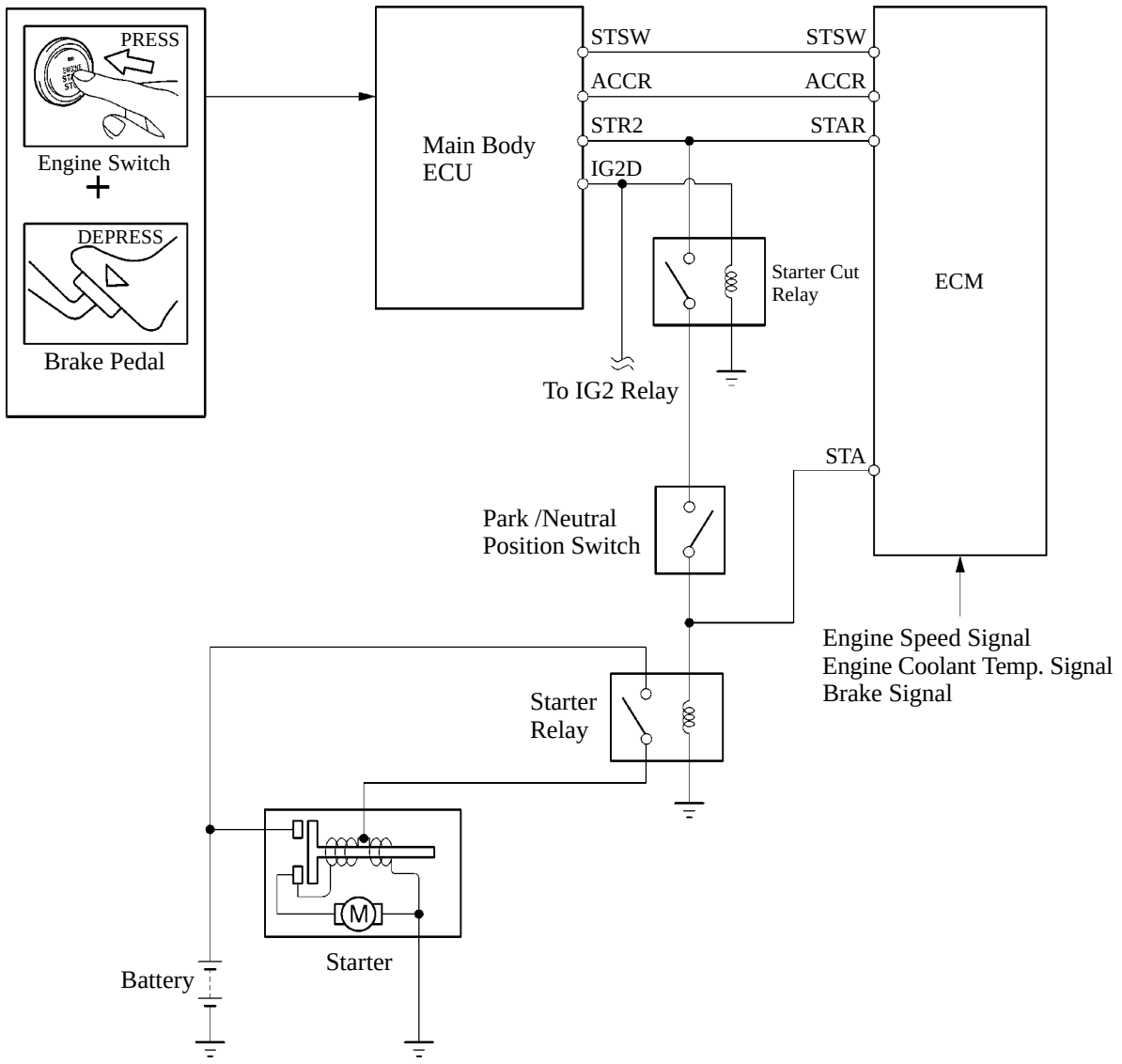

01YEG15TE

Operation

As indicated in the below timing chart, when the ECM detects a STSW signal (start signal) from the main body ECU, the ECM outputs STAR signal (starter relay drive signal) through the starter cut relay to the starter relay and actuates the starter. The ECM also outputs ACCR signal (ACC-cut request signal) to the main body ECU. Thus, the main body ECU will not energize the ACC relay. If the engine is already running, the ECM stops the output of the STAR signal to the starter relay and the output of the ACCR signal to the main body ECU. Thus, the starter operation stops and the main body ECU energizes the ACC relay.

After the starter operates and the engine speed becomes higher than approximately 500 rpm, the ECM determines that the engine has started and stops the output of the STAR signal to the starter relay and the output of ACCR signal to the main body ECU. Thus, the starter operation stops and the main body ECU energizes the ACC relay.

If the engine has any failure and does not start, the starter operates as long as its maximum continuous operation time and stops automatically. The maximum continuous operation time is approximately 2 seconds through 25 seconds depending on the water temperature condition. When the engine water temperature is extremely low, it is approximately 25 seconds and when the engine is warmed up sufficiently, it is approximately 2 seconds.

This system cuts off the current that powers the accessories while the engine is cranking to prevent the accessory illumination from operating intermittently due to the unstable voltage that is associated with the cranking of the engine.

This system has following protections.

- While the engine is running normally, the starter does not operate.
- Even if the driver keeps pressing the engine switch, the ECM stops the output of the STAR and ACCR signals when the engine speed becomes higher than 1200 rpm. Thus, the starter operation stops and the main body ECU energizes the ACC relay.
- In case the driver keeps pressing the engine switch and the engine does not start, the ECM stops the output of the STAR and ACCR signals after 30 seconds have elapsed. Thus, the starter operation stops and the main body ECU energizes the ACC relay.
- Thus, the main body ECU will stop the operation of the starter.
- In case the ECM cannot detect an engine speed signal while the starter is operating, the ECM will immediately stop the output of the STAR and ACCR signals. Thus, the starter operation stops and the main body ECU energizes the ACC relay.

▶ **Timing Chart ●**

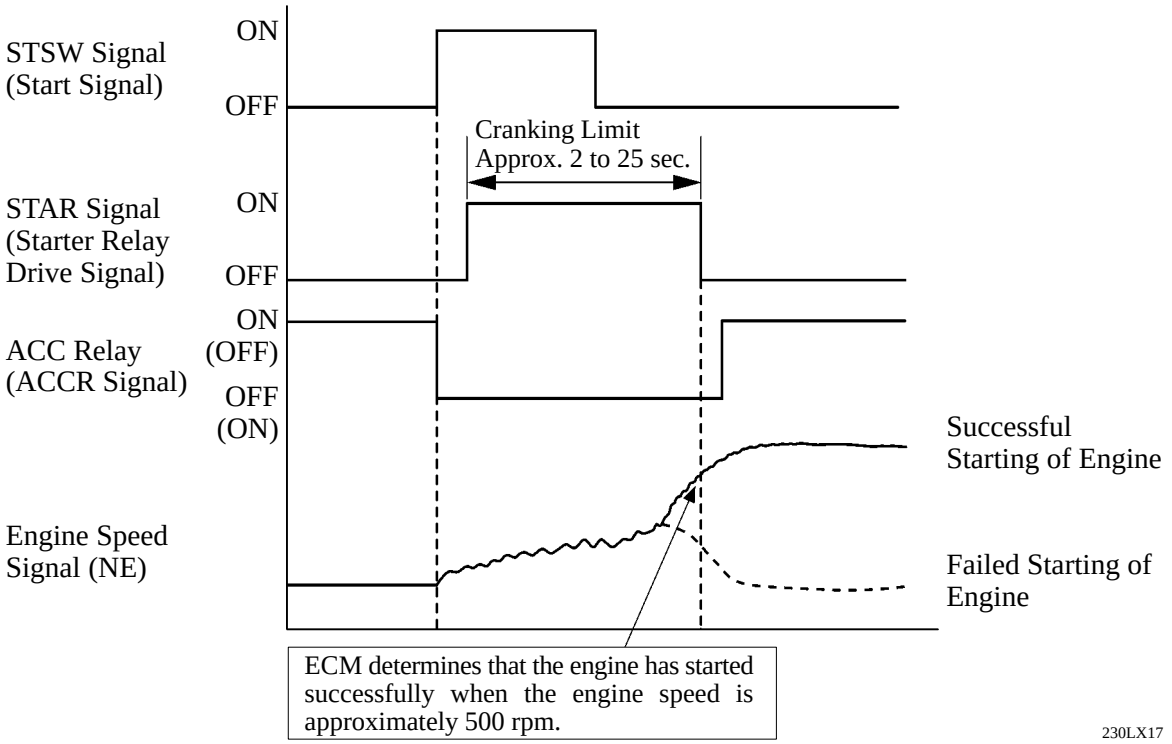

11. Evaporative Emission Control System

General

The evaporative emission control system prevents the vapor gas that is created in the fuel tank from being released directly into the atmosphere.
The basic structure and operations of this system is the same as those used on 2AZ-FE engine models, except for the arrangements of some parts. For details, refer to page EG-60.

Layout of Main Components

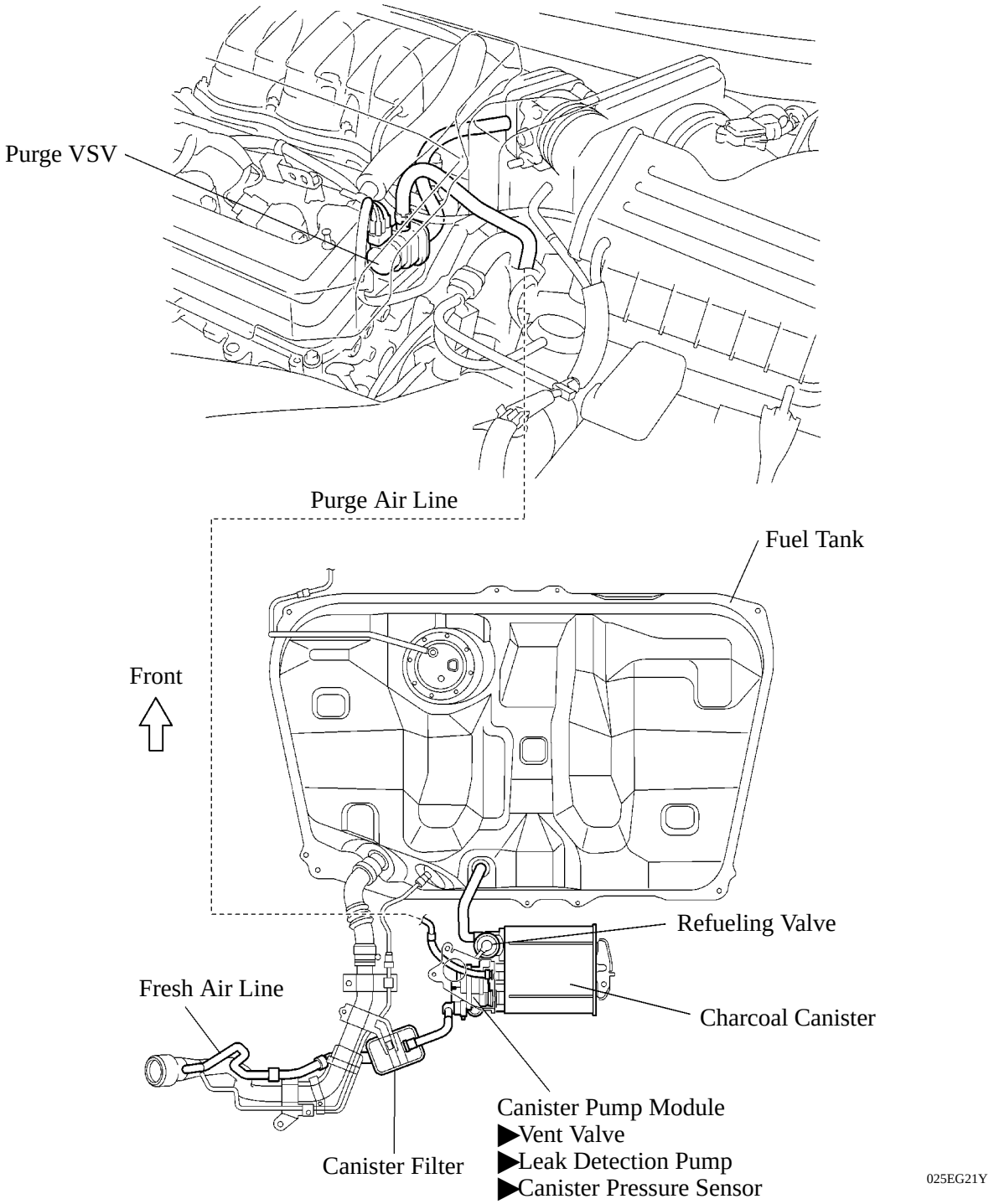

12. Diagnosis

▶ When the ECM detects a malfunction, the ECM makes a diagnosis and memorizes the failed section. Furthermore, the MIL (Malfunction Indicator Lamp) in the combination meter illuminates or blinks to inform the driver.

▶ The ECM will also store the DTC (Diagnostic Trouble Code) of the malfunctions. The DTC can be accessed by using the hand-held tester.

▶ For details, see the 2007 Camry Repair Manual (Pub. No. RM0250U).

Service Tip

▶ The ECM of the ’07 Camry uses the CAN protocol for diagnostic communication. Therefore, a hand-held tester and a dedicated adapter [CAN VIM (Vehicle Interface Module)] are required for accessing diagnostic data. For details, see the 2007 Camry Repair Manual (Pub. No. RM0250U).

▶ To clear the DTC that is stored in the ECM, use a hand-held tester, disconnect the battery terminal or remove the EFI No.1 fuse and ETCS fuse for 1 minute or longer.

13. Fail-Safe

When the ECM detects a malfunction, the ECM stops or controls the engine according to the date already stored in the memory.

▶ Fail-Safe Chart ●

DTC No.	Fail-Safe Operation	Fail-Safe Deactivation Conditions
P0031, P0032, P0051, P0052	ECM turns off air fuel ratio sensor heater.	Engine switch*1 or ignition switch*2 OFF.
P0037, P0038 P0057, P0058	ECM turns off heated oxygen sensor heater.	Engine switch*1 or ignition switch*2 OFF.
P0100, P0102, P0103	Ignition timing is calculated from engine speed and throttle angle.	“Pass” condition detected.
P0110, P0112, P0113	Intake air temperature is fixed at 20▪C (68▪F).	“Pass” condition detected.
P0115, P0117, P0118	Engine coolant temperature is fixed at 80▪C (176▪F).	“Pass” condition detected.
P0120, P0121, P0122, P0123, P0220, P0222, P0223, P0604, P0606, P0607, P0657, P2102, P2103, P2111, P2112, P2118, P2119, P2135	If ETCS-i (Electronic Throttle Control System-intelligent) has a malfunction, ECM cuts off current to throttle control motor. Throttle control valve returns to predetermined opening angle (approximately 6.5▪) by force of return spring. ECM then adjusts engine output by controlling fuel injection (intermittent fuel-cut) and ignition timing in accordance with accelerator pedal opening angel to enable vehicle to continue at minimal speed. If accelerator pedal is depressed firmly and slowly, vehicle can be driven slowly. If accelerator pedal is depressed quickly, vehicle may speed up and slow down erratically.	If “Pass” condition is detected and then the engine switch*1 or ignition switch*2 is turned OFF, fail-safe operation will stop and system will return to normal operating conditions.
P0327, P0328, P0332, P0333	Max. timing retardation.	Engine switch*1 or ignition switch*2 OFF.
P0351, P0352, P0353, P0354, P0355, P0356	Fuel is cut.	“Pass” condition detected.
P2120, P2121, P2122, P2123, P2125, P2127, P2128, P2138	Accelerator pedal position sensor has two (main and sub) sensor circuits. If a malfunction occurs in either of sensor circuits, ECM detects abnormal signal voltage difference between two sensor circuits and switches into limp mode. In limp mode, remaining circuit is used to calculate accelerator pedal opening to allow vehicle to continue driving. If both circuits malfunction, ECM regards opening angle of accelerator pedal to be fully closed. In this case, throttle valve will remain closed as if engine is idling.	If “Pass” condition is detected and then the engine switch*1 or ignition switch*2 is turned OFF, fail-safe operation will stop and system will return to normal operating conditions.

*1: With smart key system
*2: Without smart key system

Fail-safe of Accelerator Pedal Position Sensor

The accelerator pedal position sensor comprises two (Main, Sub) sensor circuits.

If a malfunction occurs in either of the sensor circuits, the ECM detects the abnormal signal voltage difference between these two sensor circuits and switches into the limp mode. In the limp mode, the remaining circuit is used to calculate the accelerator pedal opening, in order to operate the vehicle under limp mode control.

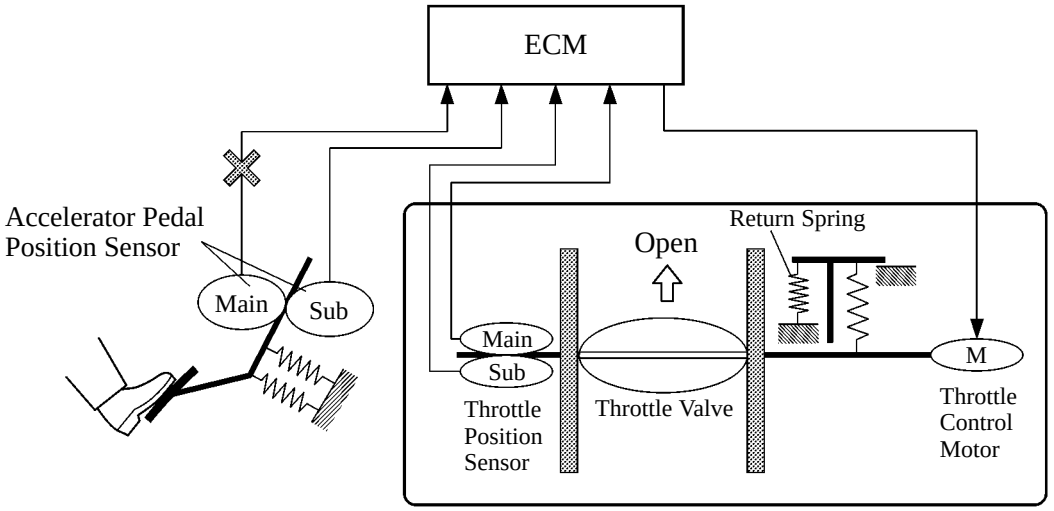

Throttle Body

D13N08

If both circuits malfunction, the ECM detects the abnormal signal voltage from these two sensor circuits and discontinues the throttle control. At this time, the vehicle can be driven within its idling range.

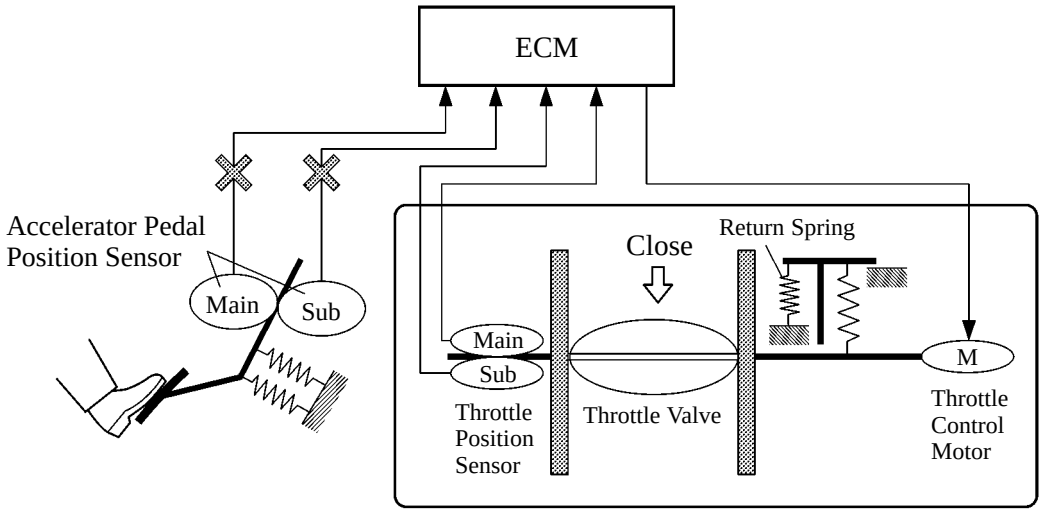

Throttle Body

D13N09

Fail-safe of Throttle Position Sensor

The throttle position sensor comprises two (Main, Sub) sensor circuits.

If a malfunction occurs in either of the sensor circuits, the ECM detects the abnormal signal voltage difference between these two sensor circuits, cuts off the current to the throttle control motor, and switches to the limp mode.

Then, the force of the return spring causes the throttle valve to return and stay at the prescribed opening. At this time, the vehicle can be driven in limp mode while the engine output is regulated through the control of the fuel injection and ignition timing in accordance with the accelerator opening.

The same control as above is effected if the ECM detects a malfunction in the throttle control motor system.

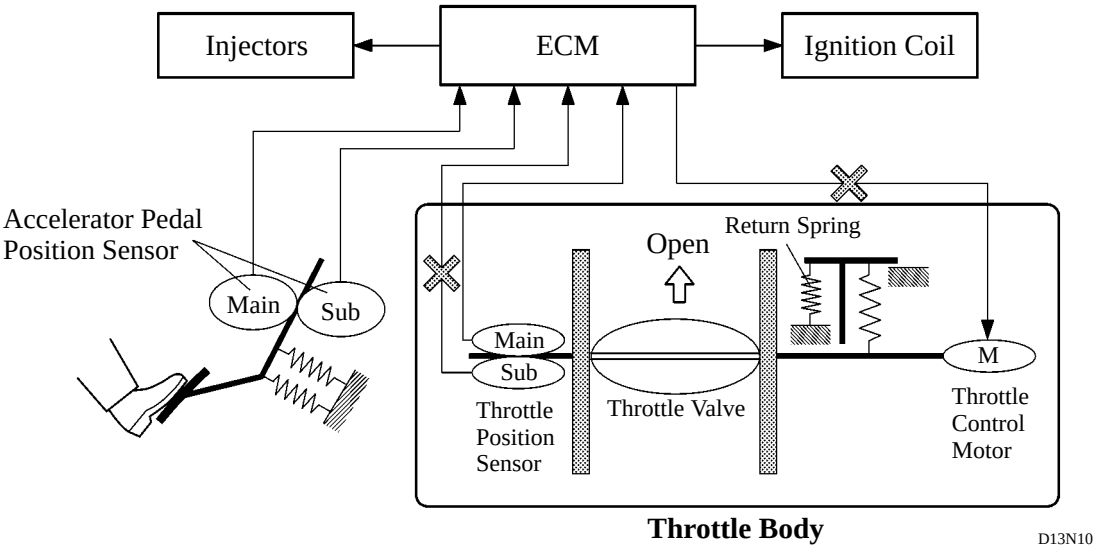

CHASSIS

CLUTCH

▪ DESCRIPTION

The ’07 Camry has a clutch system with the following features.

A dry type single plate which is operated by hydraulic pressure is used.
A clutch master cylinder made of plastic is used.
A clutch disc that uses an organic solvent-free material is used to help protect the environment.
A clutch accumulator is used to reduce the noise and vibration.
A turnover mechanism, which reduces clutch pedal effort, is used.
A clutch start system is used to ensure safety.

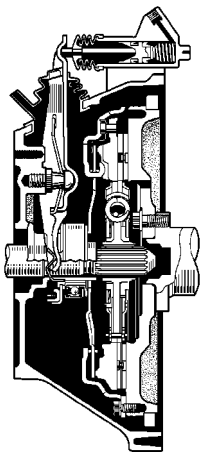

025CH87Y

▶ Specifications ●

Model		’07 Camry	’06 Camry
Engine Type		2AZ-FE	△
Clutch	Type	Dry Type Single Plate Clutch Diaphragm Spring	△
	Operation	Hydraulic	△
Clutch Cover	Type	DST*1	△
	Size mm (in.)	239 (9.40)	236 (9.29)
	Installed Load N	5900	△
Clutch Disc	Facing Size*2 mm (in.)	236 x 150 x 3.5 (9.29 x 5.91 x 0.14)	△
	Facing Area cm^2 ($in.^2$)	260 (40.4)	△
Master Cylinder	Type	Plunger	△
	Cylinder Dia. mm (in.)	15.87 (0.62)	△
Release Cylinder	Type	Non-Adjustable	△
	Cylinder Dia. mm (in.)	20.64 (0.81)	△
Clutch Start System		Standard	△
Clutch Pedal		Turnover	△

*1: DST (Diaphragm Spring Turnover)
*2: Outer Diameter x Inner Diameter x Thickness

●CLUTCH START SYSTEM

1. General

This system prevents the starter from cranking unless the clutch pedal is depressed. This prevents the engine from being started in gear, and ensures safety by preventing the vehicle from moving unintentionally.

2. Wiring Diagram

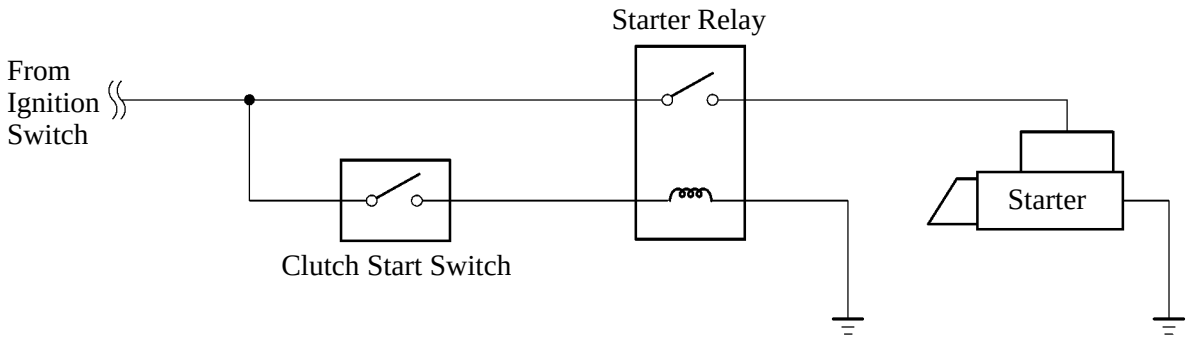

025CH51TE

3. Layout of Main Components

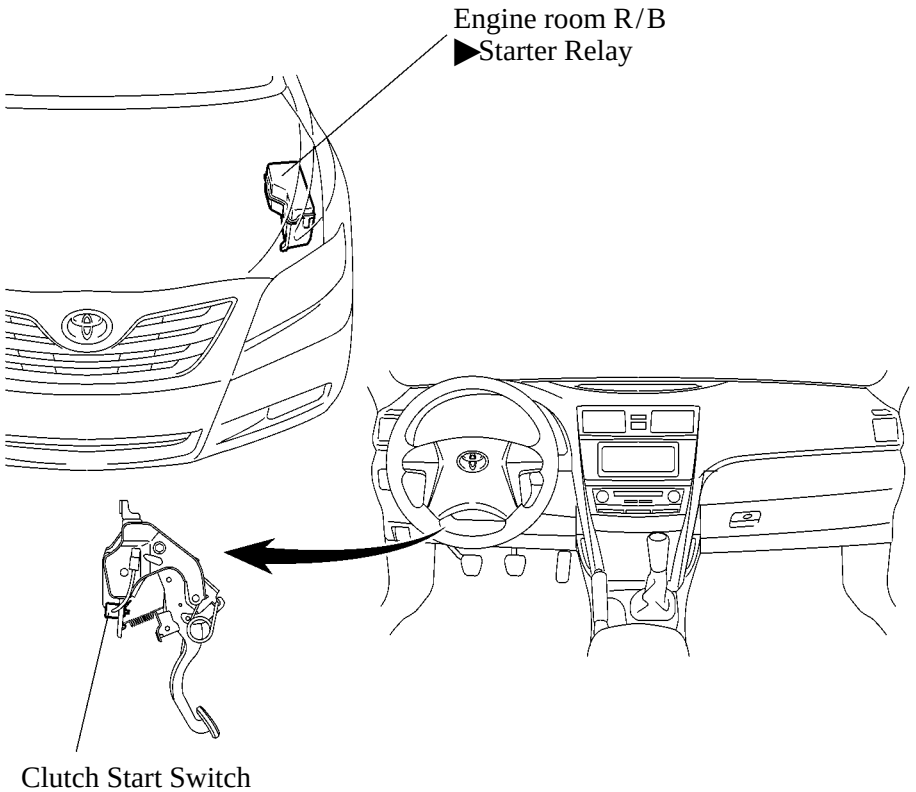

025CH52Y

E351 MANUAL TRANSAXLE

▪ DESCRIPTION

The 2AZ-FE engine model is used the 5-speed E351 manual transaxle.

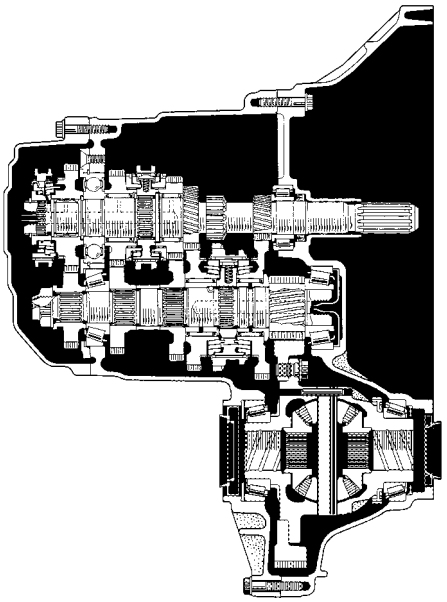

025CH58Y

▶ Specifications ●

Engine Type		2AZ-FE
Gear Ratio	1st	3.538
	2nd	2.045
	3rd	1.333
	4th	0.972
	5th	0.731
	Reverse	3.583
Differential Gear Ratio		3.944
Oil Capacity	Liters (US qts, Imp. qts)	2.5 (2.6, 2.2)
Oil Viscosity		SAE 75W-90
Oil Grade		API GL-4 or GL-5
Dry Weight	kg (lb)	Approx. 44 (97)

▪ SHIFT AND SELECT MECHANISM

An excellent shift feel has been achieved through the use of the mass damper on the shift and select shaft, and sliding ball bearing.

A shift guide plate is provided on the shift and select shaft. The movement distance of the shift and select shaft in the select direction after the shifting is completed is regulated by the shift guide plate and shift guide pin. This clarifies the position of the shift knob and enables accurate shift operations.

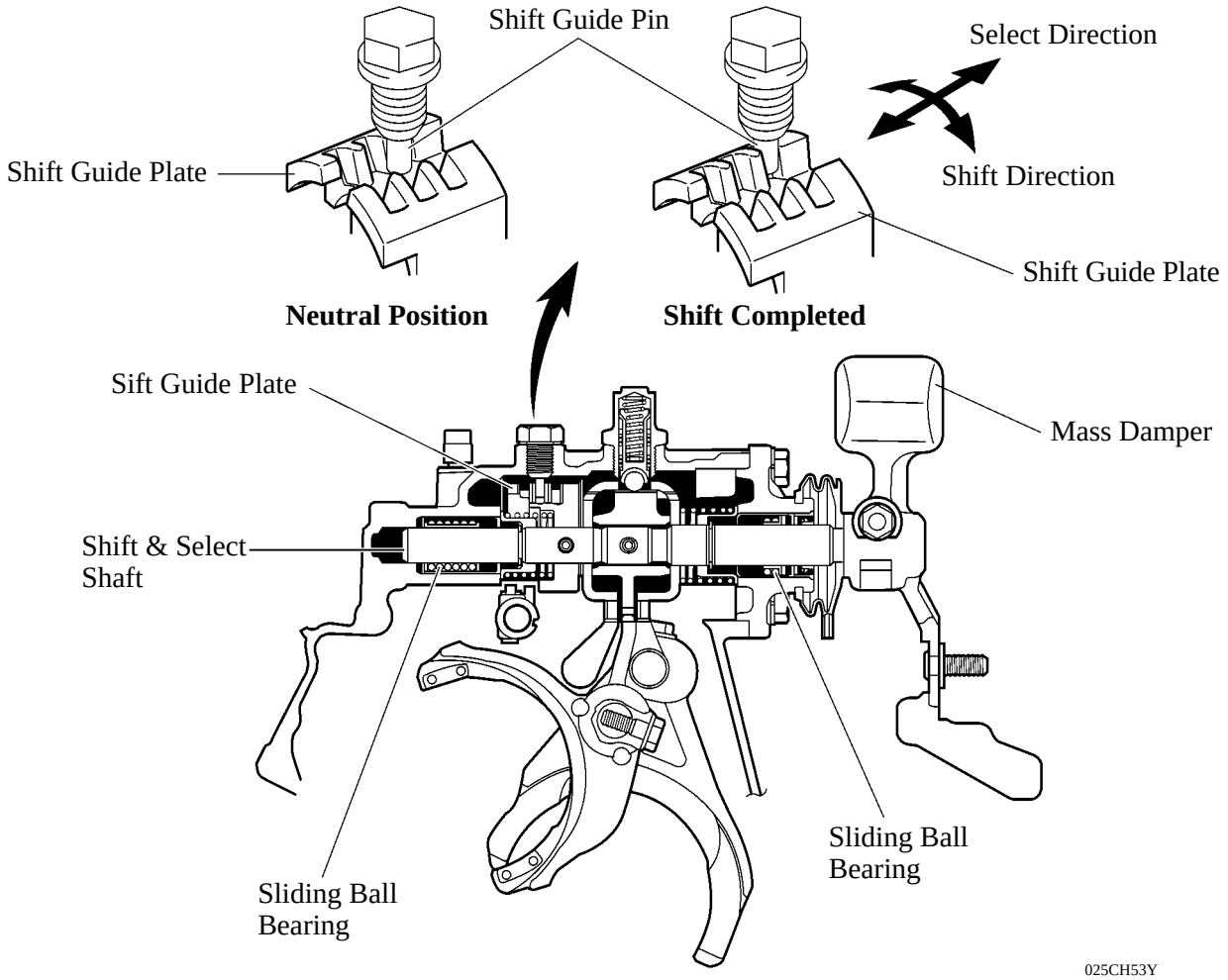

U250E AUTOMATIC TRANSAXLE

DESCRIPTION

U250E automatic transaxle is used on the 2AZ-FE engine models. This automatic transaxle is a compact, lightweight and high-capacity 5-speed Super ECT (Electronically Controlled Transaxle).

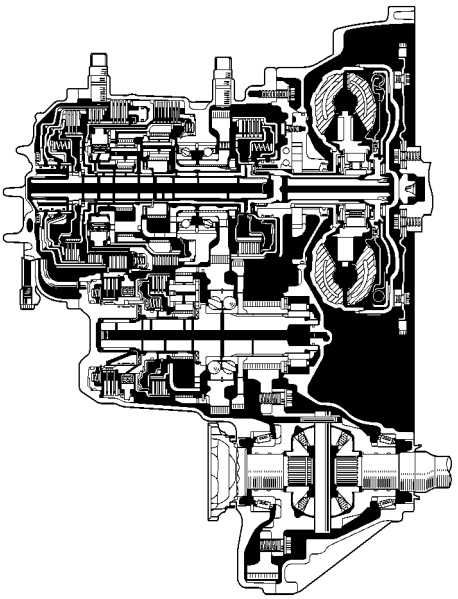

025CH01Y

▶ Specifications ●

Model		’07 Camry	’06 Camry
Engine Type		2AZ-FE	Δ
Transaxle Type		U250E	Δ
Gear Ratio*1	1st	3.943	Δ
	2nd	2.197	Δ
	3rd	1.413	Δ
	4th	0.975	Δ
	5th	0.703	Δ
	Reverse	3.145	Δ
Differential Gear Ratio		3.391	Δ
Fluid Capacity*2	Liters (US qts, Imp. qts)	8.0 (8.5, 7.0)	Δ
Fluid Type		Toyota Genuine ATF WS	ATF Type T-IV
Weight (Reference)*3	kg (lb)	93 (205)	Δ

*1: Counter gear ratio included
*2: Differential included
*3: Weight shows the figure with the fluid filled to the maximum level.

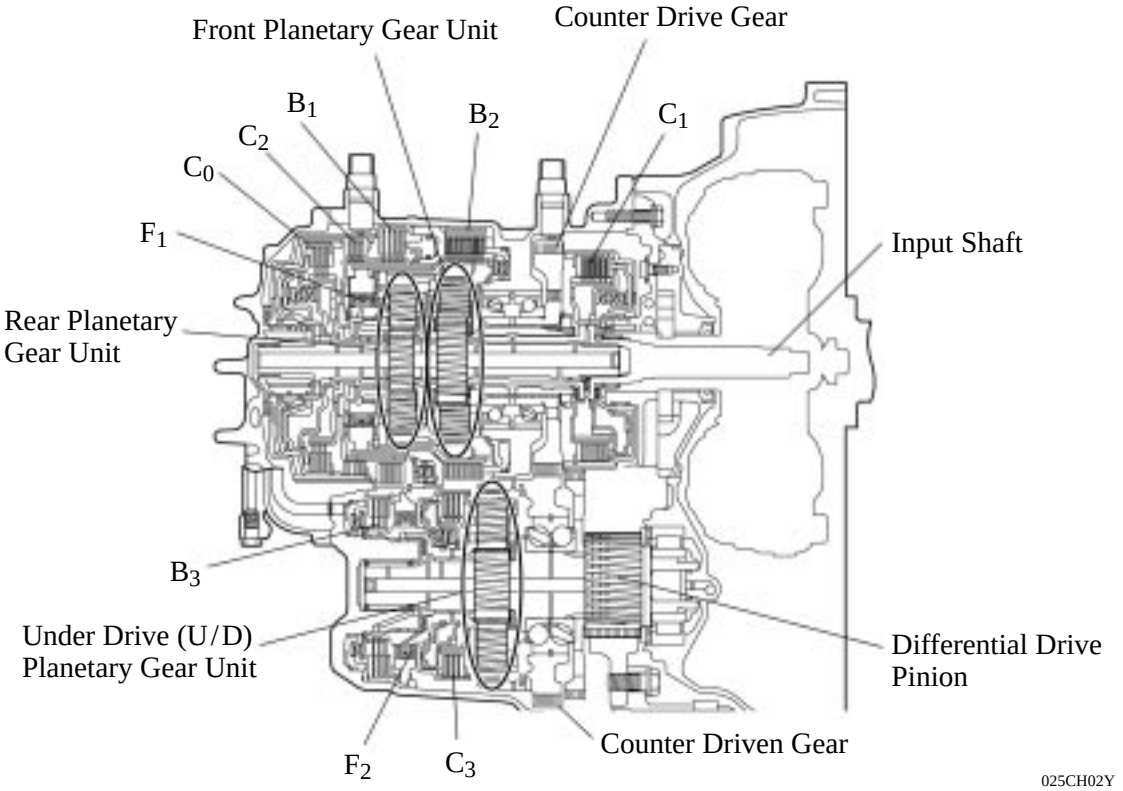

▶ **Specifications ●**

C_1	Forward Clutch	The No. of Discs	5
C_2	Reverse Clutch		3
C_3	U/D Direct Clutch		3
C_0	Direct & O/D Clutch		3
B_1	2nd & O/D Brake		3
B_2	1st & Reverse Brake		5
B_3	U/D Brake		3
F_1	No.1 One-Way Clutch	The No. of Sprags	22
F_2	U/D One-Way Clutch		15
Front Planetary Gear Unit		The No. of Sun Gear Teeth	43
		The No. of Pinion Gear Teeth	17
		The No. of Ring Gear Teeth	77
Rear Planetary Gear Unit		The No. of Sun Gear Teeth	31
		The No. of Pinion Gear Teeth	19
		The No. of Ring Gear Teeth	69
U/D Planetary Gear Unit		The No. of Sun Gear Teeth	32
		The No. of Pinion Gear Teeth	26
		The No. of Ring Gear Teeth	83
Counter Gear		The No. of Drive Gear Teeth	50
		The No. of Driven Gear Teeth	51

●ATF (AUTOMATIC TRANSMISSION FLUID) WS

▶ATF WS is used to reduce the resistance of the ATF and improve the fuel economy by reducing its viscosity in the practical operating temperature range. At higher fluid temperatures, the viscosity is the same as that of ATF Type T-IV, which ensures the durability of the automatic transaxle.

▶ATF WS and other types of ATF (ATF Type T-IV, D-II.) are not interchangeable.

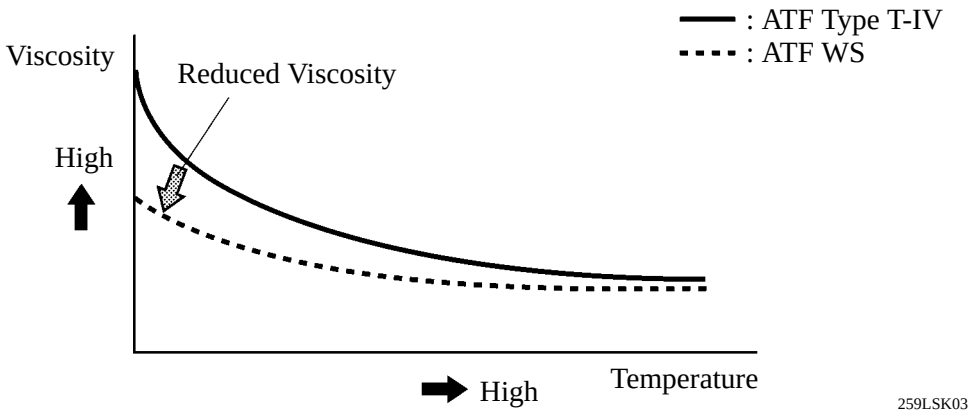

▪ TORQUE CONVERTER

This torque converter has optimally designed fluid passages and impeller configuration resulting in substantially enhanced transmission efficiency to ensure better starting, acceleration and fuel economy.

Furthermore, a hydraulically operated lock-up mechanism, which enables the lock-up (flex lock-up) operation at medium to high vehicle speeds, is used to reduce the slip loss of the torque converter.

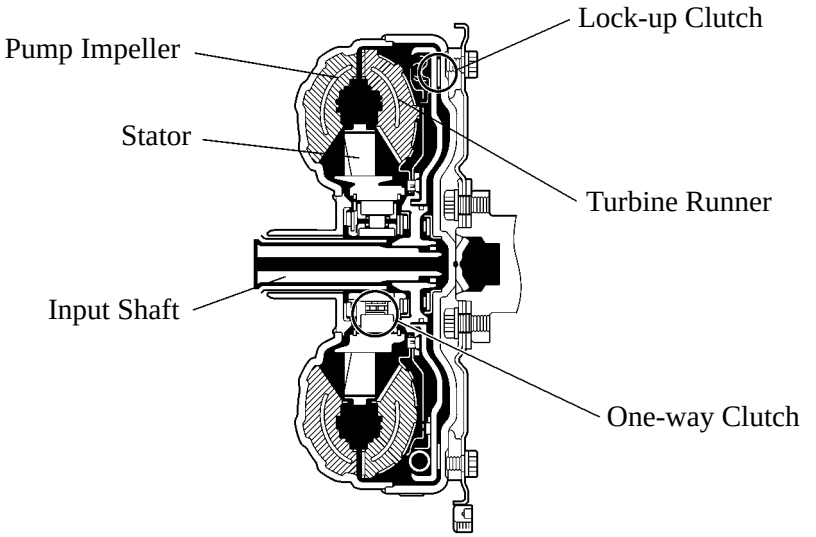

208CH02

▶ Specifications ●

Torque Converter Type	3-Element, 1-Step, 2-Phase
Stall Torque Ratio	1.8

▪ OIL PUMP

The oil pump is operated by the torque converter. It lubricates the planetary gear units and supplies operating fluid pressure for hydraulic control.

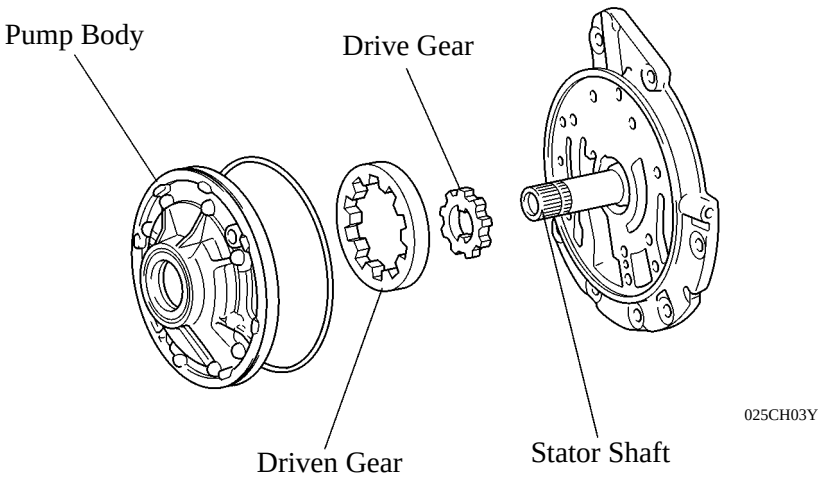

025CH03Y

●PLANETARY GEAR UNIT

1. Construction

▶The U250E automatic transaxle uses the gear layout in which the front and rear planetary gear units are placed on the input shaft (intermediate shaft), the counter drive and driven gears are placed on the front of the front planetary gear unit, and the U/D planetary gear unit is placed on the counter shaft.

▶A centrifugal fluid pressure canceling mechanism is used in the C_0, C_2, C_3, and C_1 clutches that are applied when shifting from 2nd to 3rd, from 3rd to 4th and from 4th to 5th. For detail, refer to Centrifugal Fluid Pressure Canceling Mechanism on page CH-16.

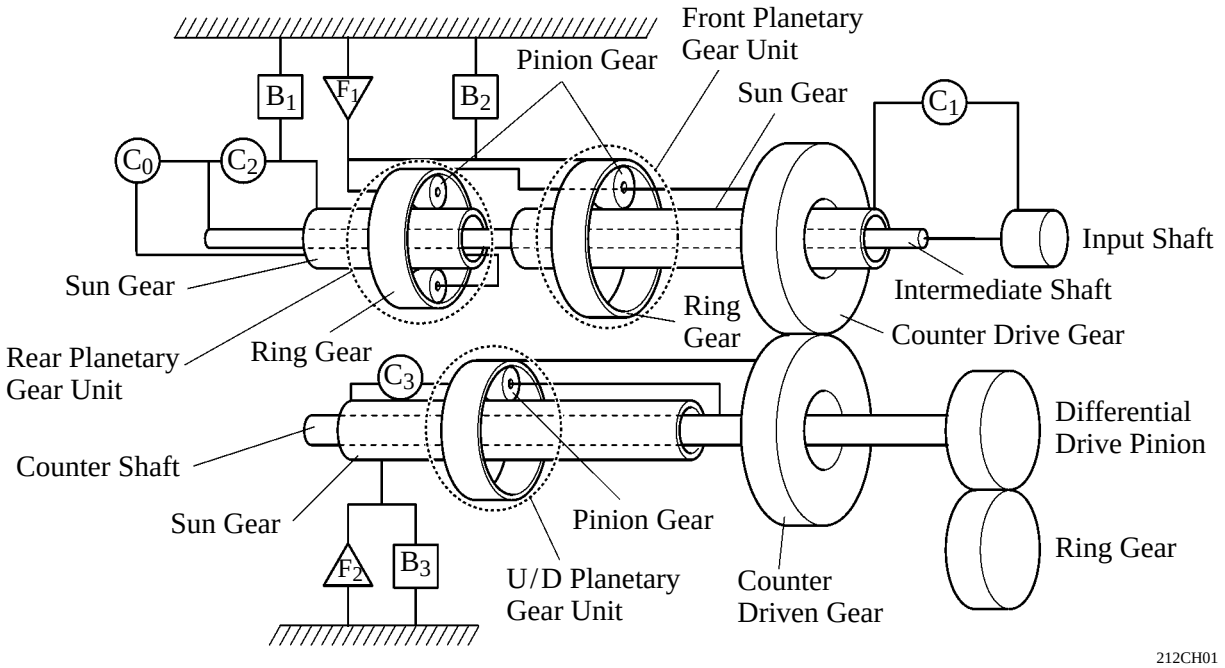

2. Function of Components

Component		Function
C_1	Forward Clutch	Connects input shaft and front planetary sun gear.
C_2	Reverse Clutch	Connects input shaft and rear planetary sun gear.
C_3	U/D Direct Clutch	Connects U/D planetary sun gear and U/D planetary carrier.
C_0	Direct & O/D Clutch	Connects input shaft and rear planetary carrier.
B_1	2nd & O/D Brake	Prevents rear planetary sun gear from turning either clockwise or counterclockwise.
B_2	1st & Reverse Brake	Prevents rear planetary carrier and front planetary ring gear from turning either clockwise or counterclockwise.
B_3	U/D Brake	Prevents U/D planetary sun gear from turning either clockwise or counterclockwise.
F_1	No.1 One-Way Clutch	Prevents rear planetary carrier and front planetary ring gear from turning counterclockwise.
F_2	U/D One-Way Clutch	Prevents U/D planetary sun gear from turning clockwise.
Planetary Gears		These gears change the route through which driving force is transmitted, in accordance with the operation of each clutch and brake, in order to increase or reduce the input and output speeds.

3. Transaxle Power Flow

Shift Lever Position	Gear	Solenoid Valve						Clutch				Brake			One-way Clutch	
		S4	SR	DSL	SL1	SL2	SL3	C_0	C_1	C_2	C_3	B_1	B_2	B_3	F_1	F_2
P	Park															
R	Reverse															
N	Neutral															
D	1st															
	2nd															
	3rd															
	4th			△*1■		△*1■										
	5th			△■		△■										
4	1st															
	2nd															
	3rd															
	4th			△■ *2		△■ *2										
3	1st															
	2nd															
	3rd															
2	1st															
	2nd															
L	1st															

: ON △: Lock-up ON ■ : Flex lock-up ON

*1: Shift control operates only when 5th is prohibited while traveling uphill/downhill.
*2: The 4th gear in 4-range flex lock-up is ON only during deceleration.

1st Gear (D, 4, 3 or 2 Position)

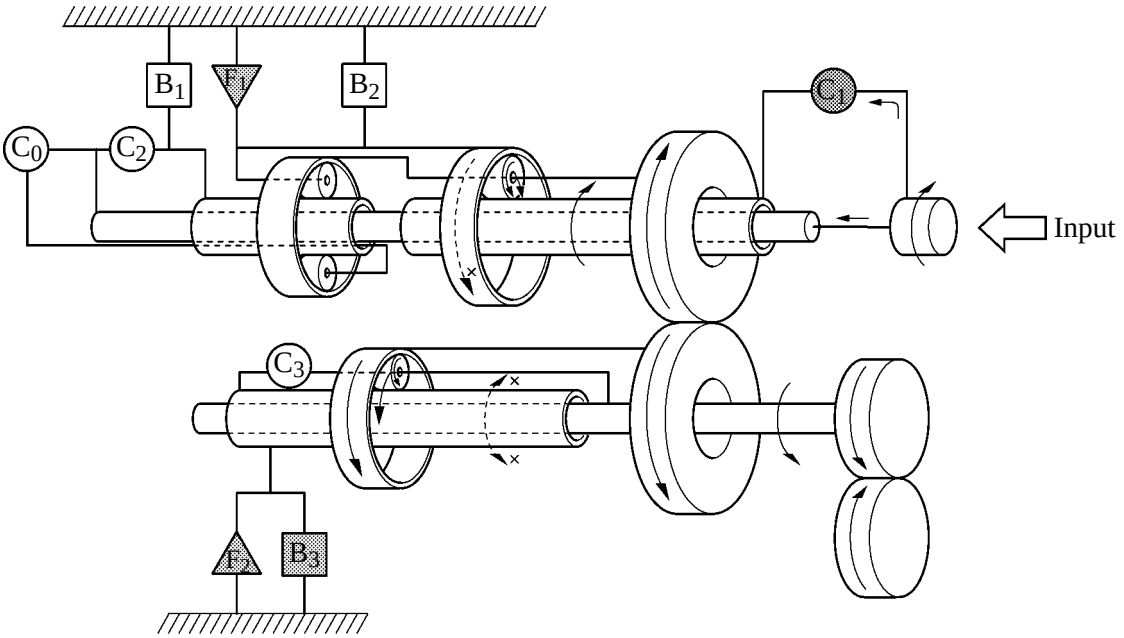

275CA44

1st Gear (L Position)

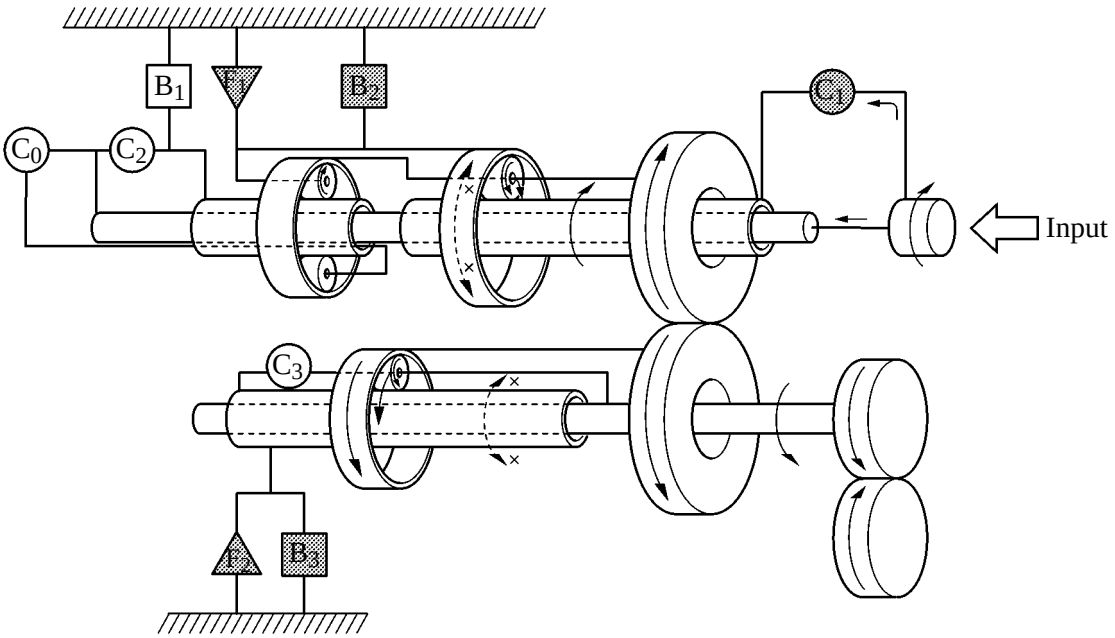

025CH04Y

2nd Gear (D, 4, 3 or 2 Position)

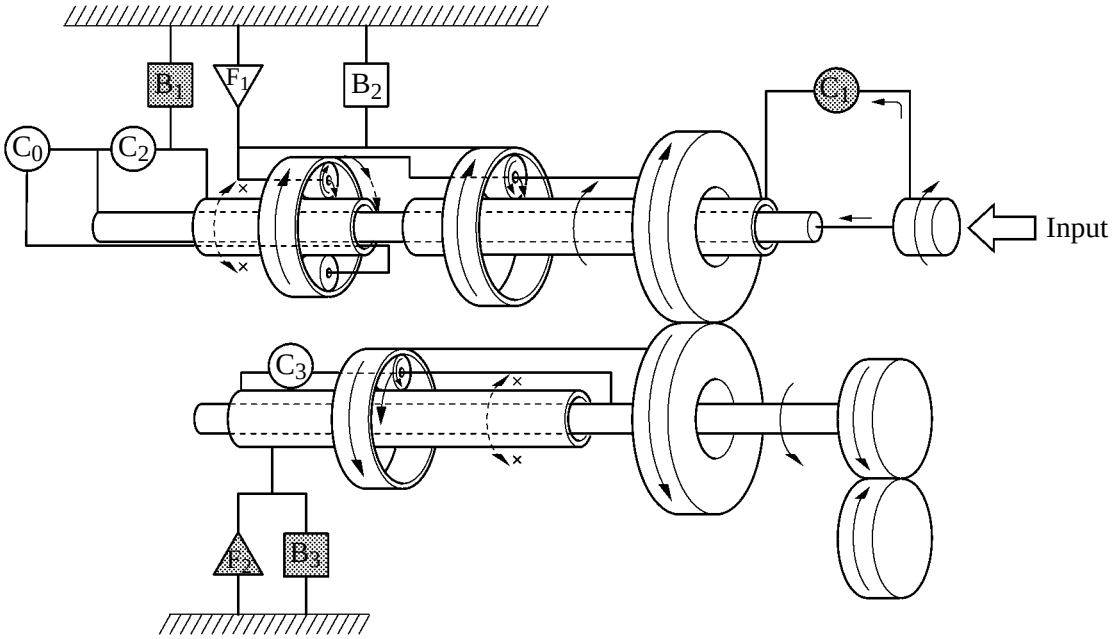

025CH05Y

3rd Gear (D, 4 or 3 Position)

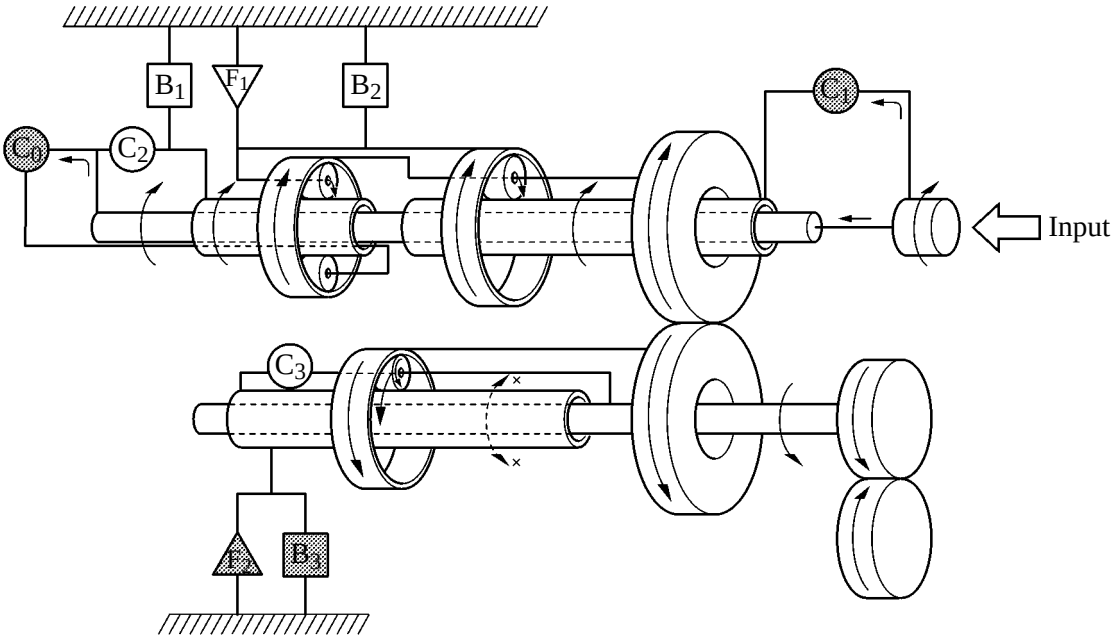

025CH06Y

4th Gear (D or 4 Position)

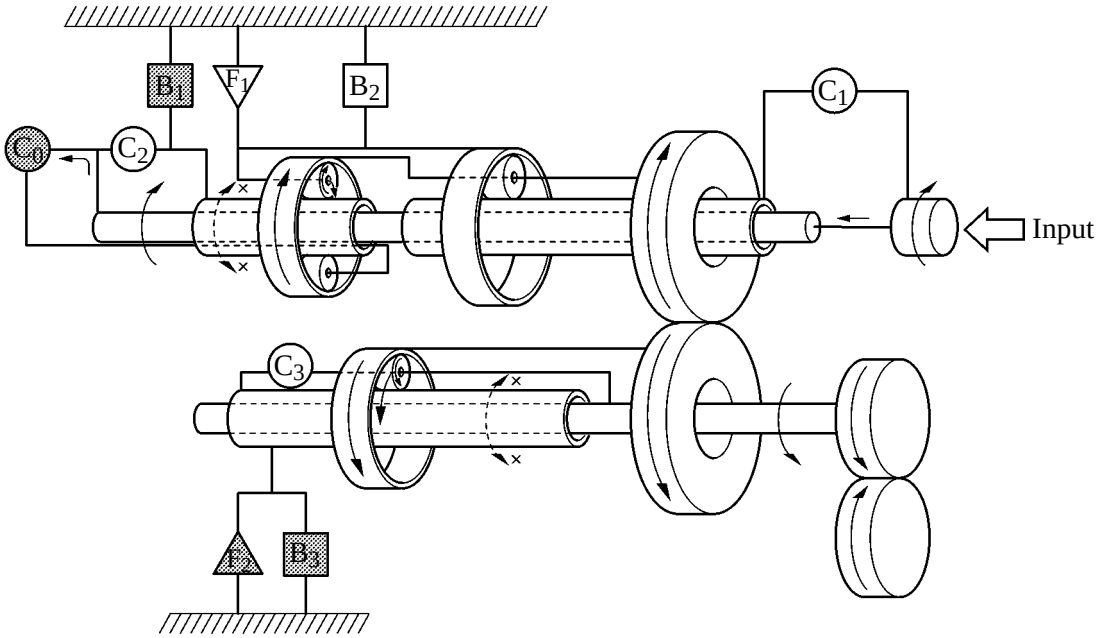

025CH07Y

5th Gear (D Position)

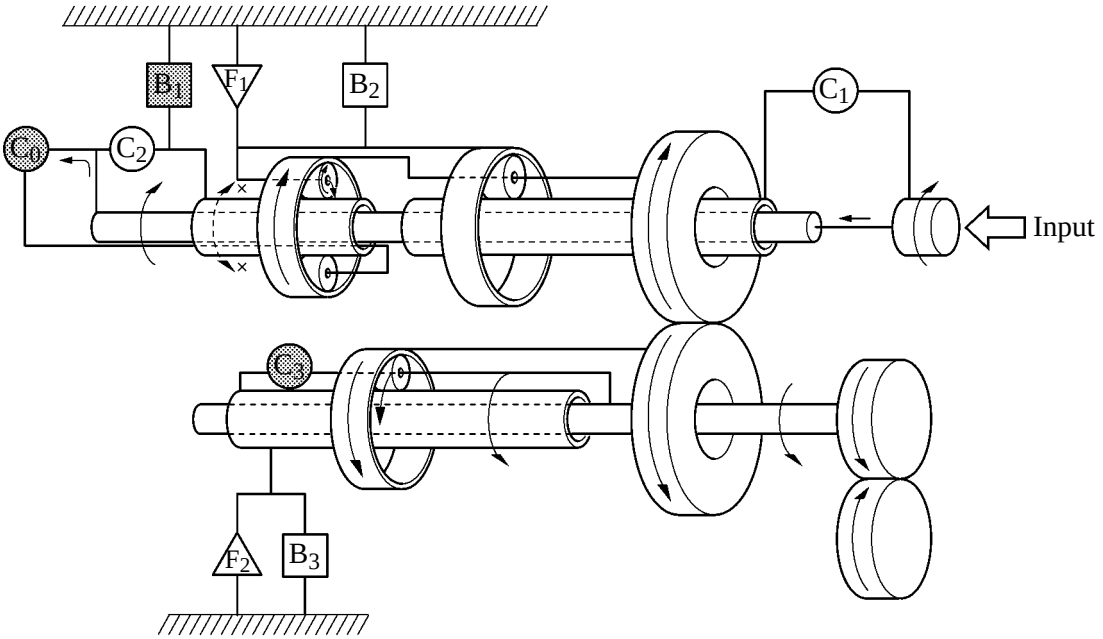

025CH08Y

Reverse Gear (R Position)

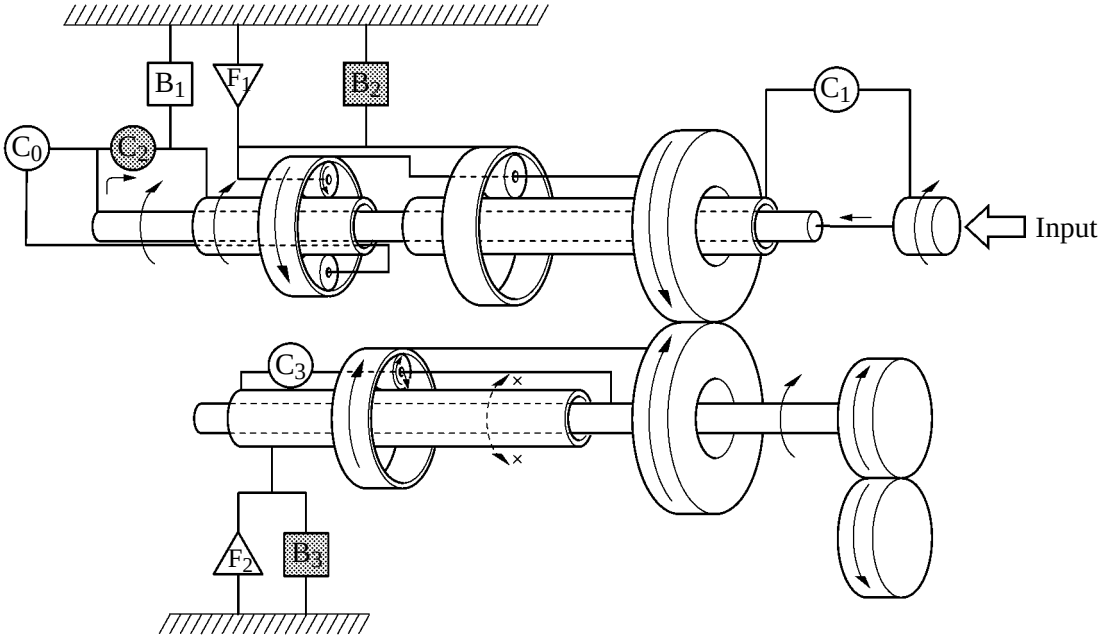

025CH09Y

4. Centrifugal Fluid Pressure Canceling Mechanism

There are two reasons for improving the conventional clutch mechanism:

▶ To prevent the generation of pressure by the centrifugal force that is applied to the fluid in piston fluid pressure chamber (hereafter referred to as “chamber A”) when the clutch is released, a check ball is provided to discharge the fluid. Therefore, before the clutch could be subsequently applied, it took time for the fluid to fill the chamber A.

▶ During shifting, in addition to the original clutch pressure that is controlled by the valve body, the pressure that acts on the fluid in chamber A also exerts influence, which is dependent upon revolution fluctuations.

To address these two needs for improvement, a canceling fluid pressure chamber (hereafter referred to as “chamber B”) has been provided opposite chamber A.

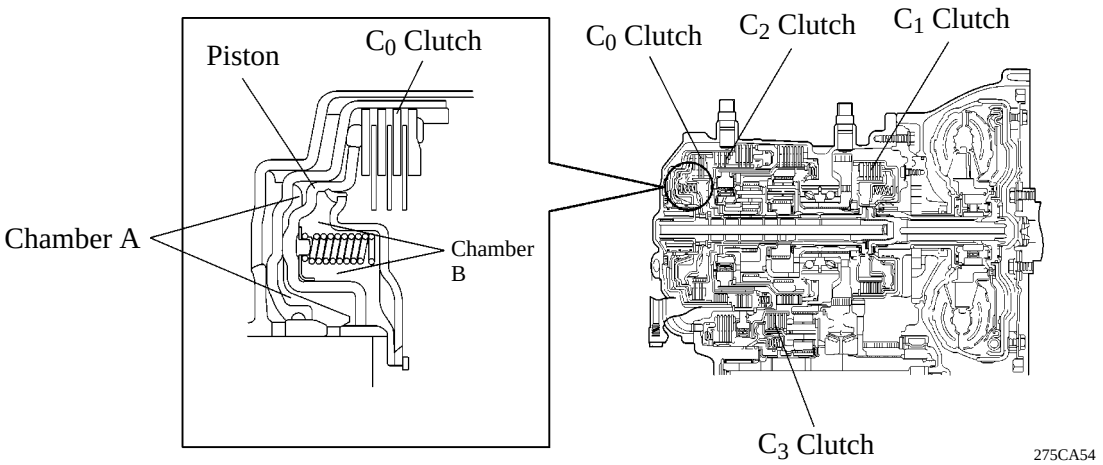

By utilizing lubrication fluid such as that of the shaft, an equal centrifugal force is applied, thus canceling the centrifugal force that is applied to the piston itself. Accordingly, it is not necessary to discharge the fluid through the use of a check ball, and a highly responsive and smooth shifting characteristic has been achieved.

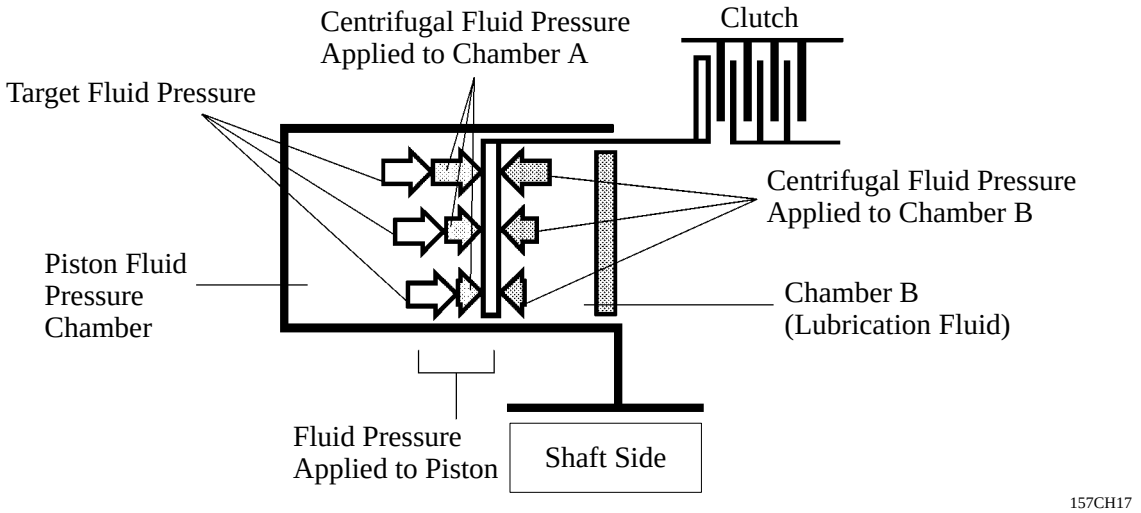

Fluid pressure applied to piston	-	Centrifugal fluid pressure applied to chamber B	=	Target fluid pressure (original clutch pressure)

▪ VALVE BODY UNIT

1. General

The valve body consists of the upper and lower valve bodies and 7 solenoid valves (SL1, SL2, SL3, SLT, DSL, S4, SR).

Apply orifice control, which controls the flow volume to the B_3 brake, is used in this unit.

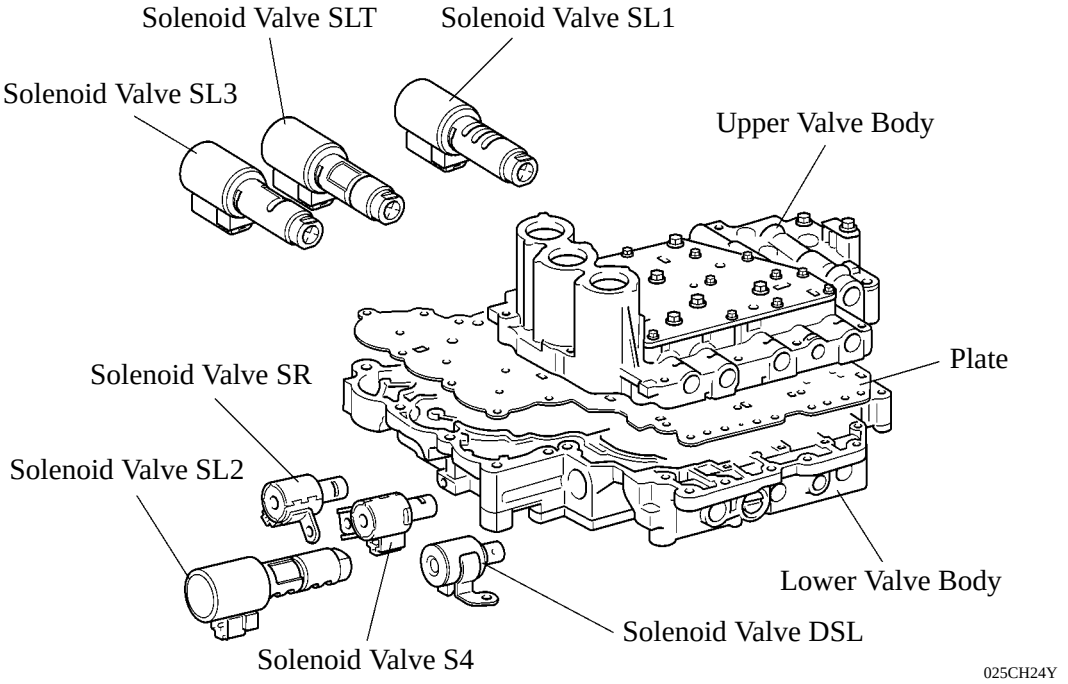

▶ **Upper Valve Body ●**

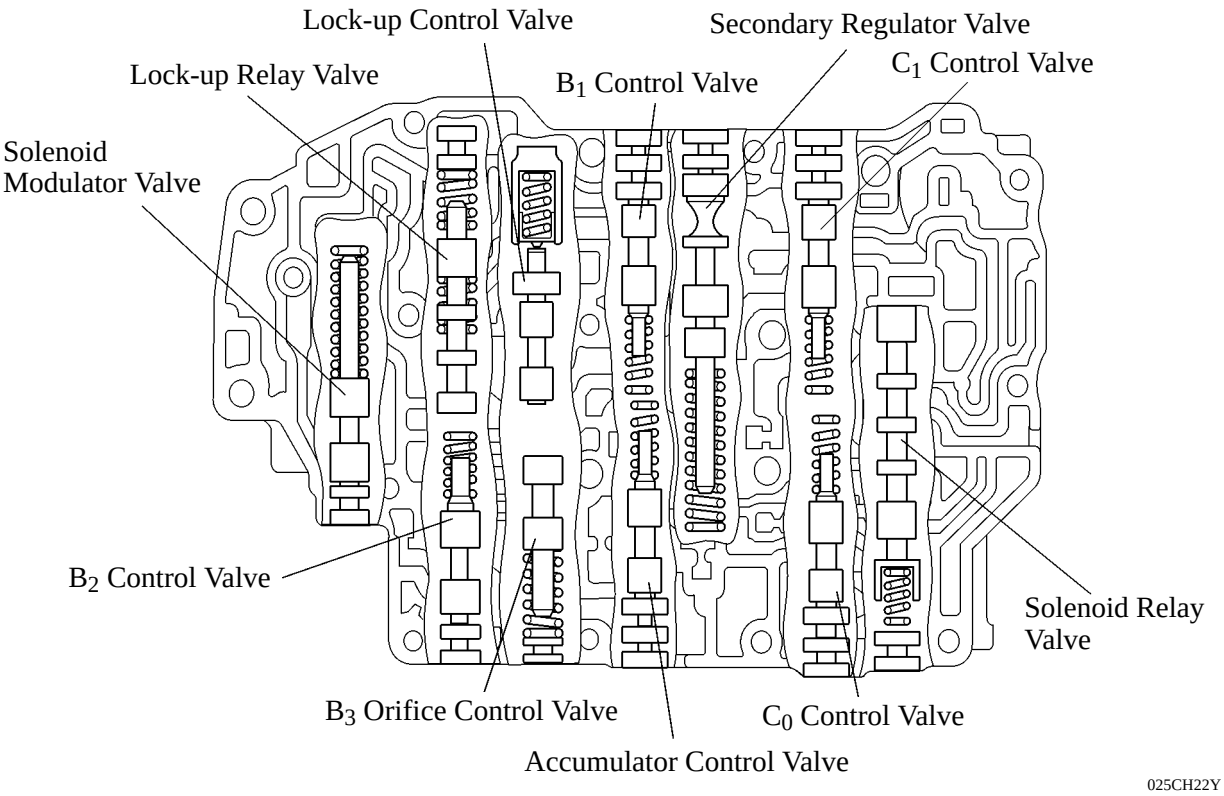

▶ **Lower Valve Body** ●

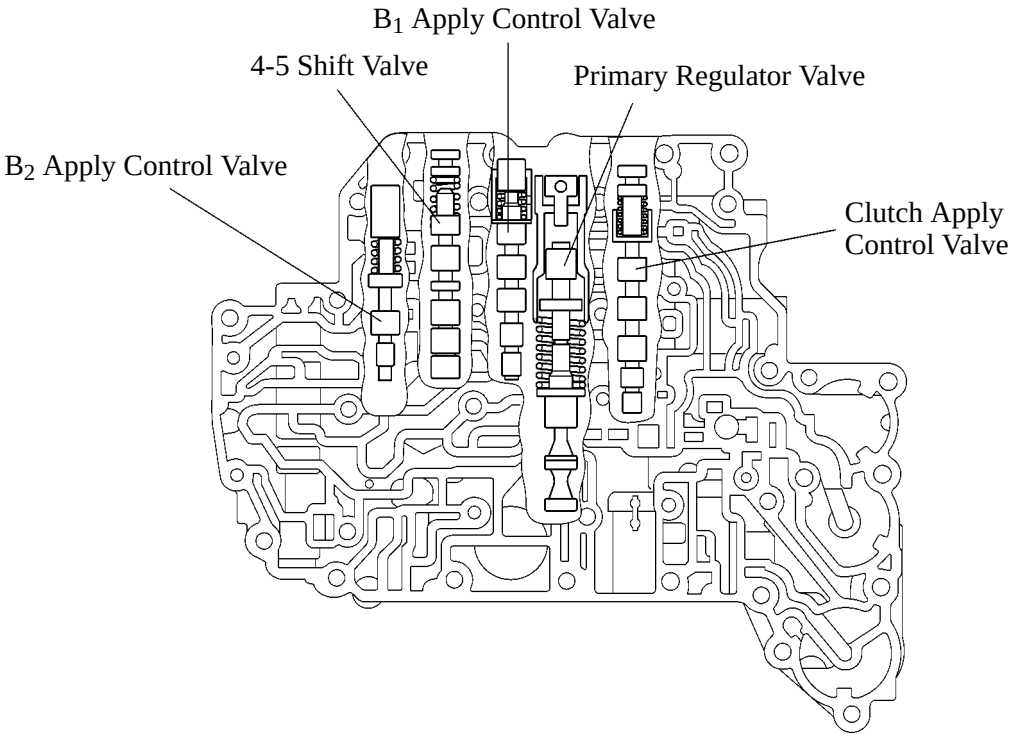

025CH23Y

2. Solenoid Valves

Solenoid Valves SL1, SL2, SL3 and SLT

In order to provide a hydraulic pressure that is proportion to current that flows to the solenoid coil, the solenoid valves SL1, SL2, SL3, and SLT linearly control the line pressure and clutch and brake engagement pressure based on the signals received from the ECM.

The solenoid valves SL1, SL2, SL3, and SLT have the same basic structure.

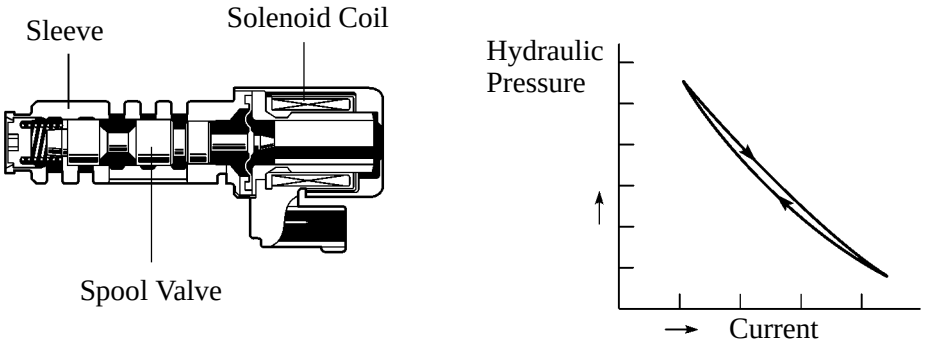

275CA51

▶ Function of Solenoid Valves ●

Solenoid Valve	Function
SL1	B_1 brake pressure control
SL2	C_0 clutch pressure control Lock-up clutch pressure control
SL3	C_1 clutch pressure control
SLT	Line pressure control Secondary pressure control

Solenoid Valve SR, S4 and DSL

The solenoid valves SR, S4, and DSL use a three-way solenoid valve.

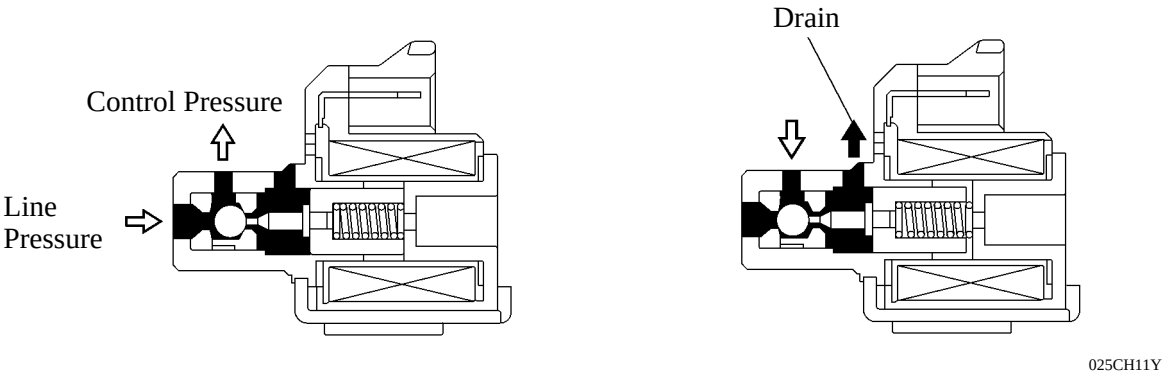

Solenoid Valve ON **Solenoid Valve OFF**

The solenoid valve SR controls the solenoid relay valve. Accordingly, the fluid passages from the solenoid valve DSL and S4 have been changed.

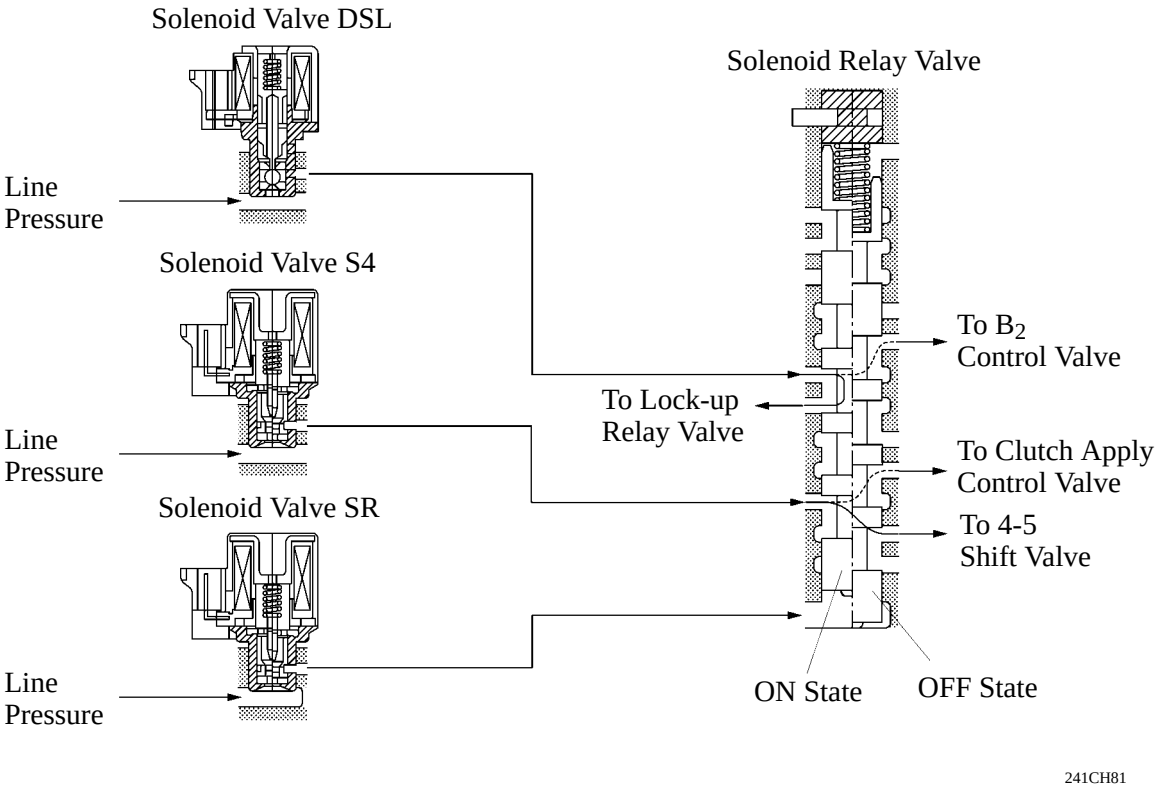

The solenoid valve S4, when set to ON, controls the 4-5 shift valve to establish the 5th by changing over the fluid pressure applied to B_3 brake and C_3 clutch.

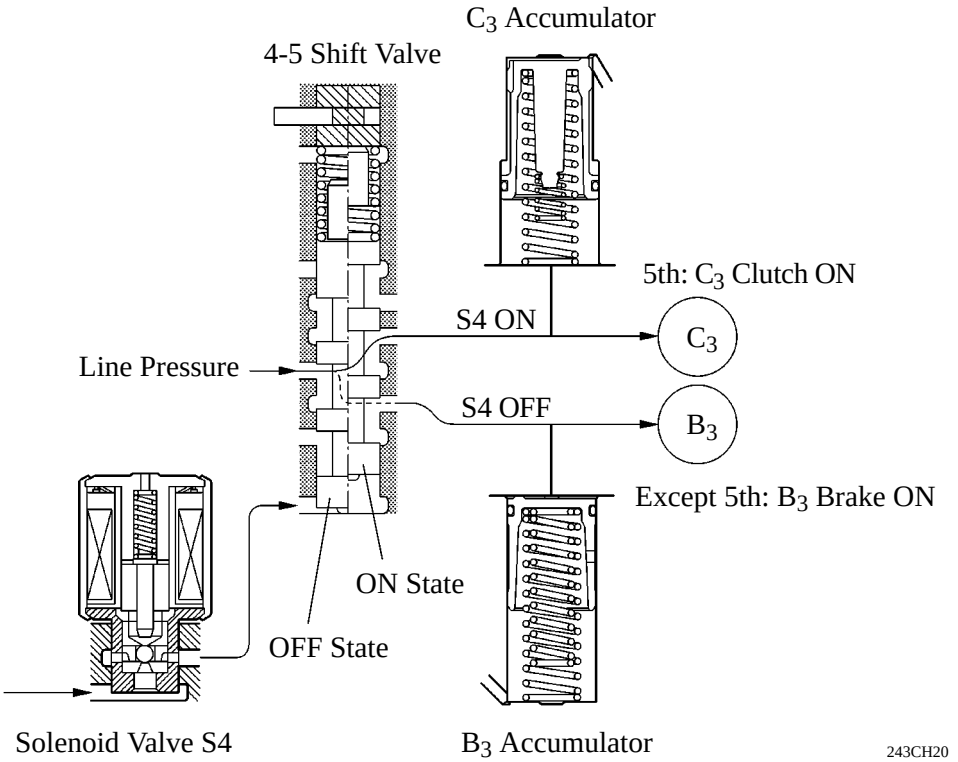

The solenoid valve DSL controls the B_2 control valve via the solenoid relay valve when the transaxle is shifted in the R or L position. During lock-up, the lock-up relay valve is controlled via the solenoid relay valve.

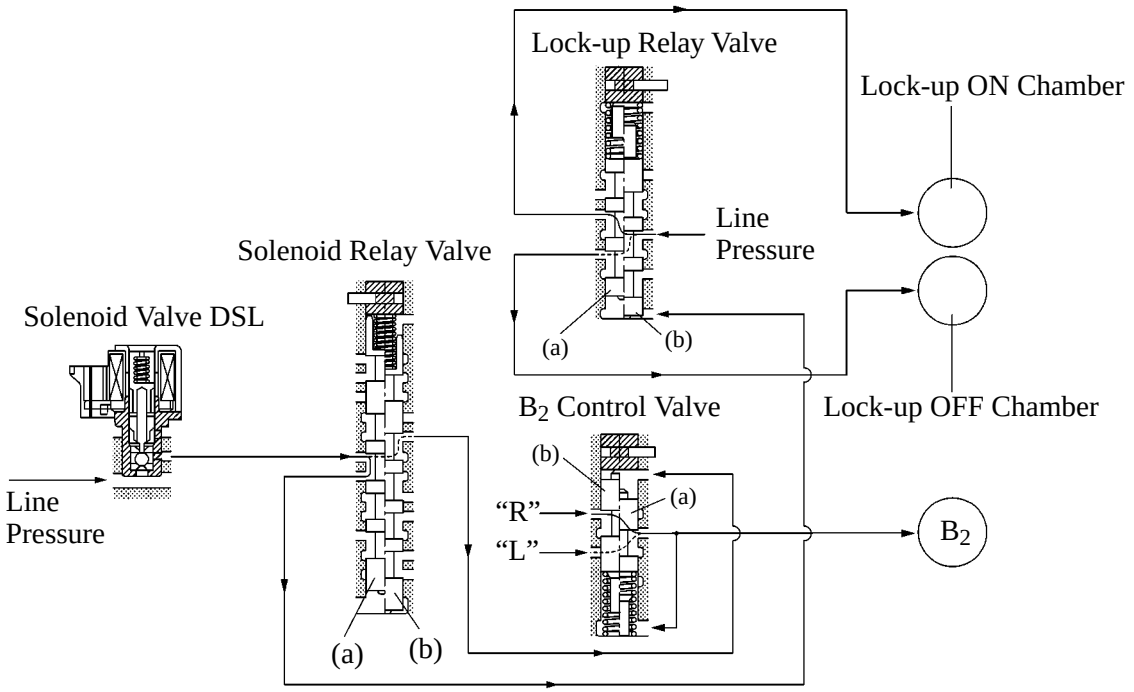

(a): ON State
(b): OFF State

3. Apply Orifice Control

This control is effected by the B_3 orifice control valve. The B_3 orifice control valve has been provided for the B_3 brake, which is applied when shifting from 5th to 4th. The B_3 orifice control valve is controlled by the amount of the line pressure in accordance with shifting conditions, and the flow volume of the fluid that is supplied to the B_3 brake is controlled by varying the size of the orifice in the control valve.

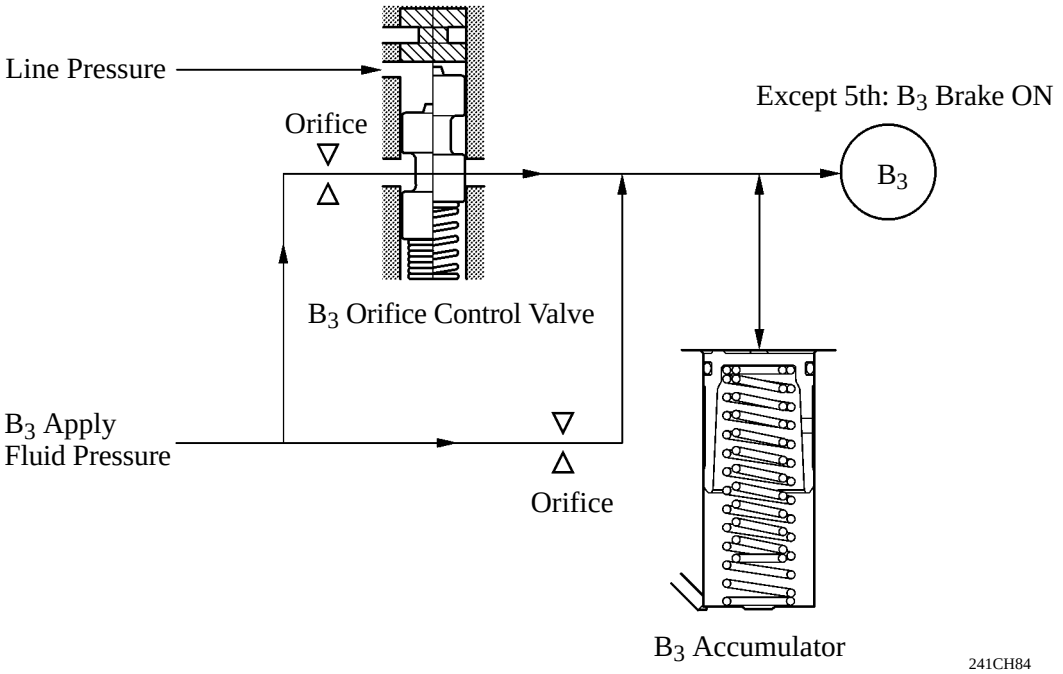

ELECTRONIC CONTROL SYSTEM

1. General

The electronic control system of the U250E automatic transaxle consists of the control listed below.

System	Outline
Shift Timing Control	The ECM sends current to 3 solenoid valves (SL1, SL2, and SL3) based on signals from each sensor and shifts the gear.
Clutch Pressure Control (See page CH-28)	Controls the pressure that is applied directly to B_1 brake, C_0 and C_1 clutches by actuating 3 solenoid valves (SL1, SL2, and SL3) in accordance with ECM signals. 3 solenoid valves (SL1, SL2, and SL3) minutely control the clutch pressure in accordance with the engine output and driving conditions.
Line Pressure Optimal Control (See page CH-29)	Actuates the solenoid valve SLT to control the line pressure in accordance with information from the ECM and the operating conditions of the transaxle.
Shifting Control in Uphill/ Downhill Traveling (See page CH-30)	Controls to restrict the 4th or 5th upshift or to provide appropriate engine braking by the ECM to determine whether the vehicle is traveling uphill or downhill.
Lock-up Timing Control	The ECM sends current to the solenoid valves DSL and SL2 based on signals from each sensor and engages or disengages the lock-up clutch.
Flex Lock-up Clutch Control (See page CH-31)	Controls the solenoid valve SL2 and DSL, provides an intermediate mode between the ON/OFF operation of the lock-up clutch, and increase the operating range of the lock-up clutch to improve fuel economy.
Engine Torque Control	Retards the engine ignition timing temporarily to improve shift feeling during up or down shifting.
“N” to “D” Squat Control	When the shift lever is shifted from “N” to “D” position, the gear is temporarily shifted to 3rd and then to 1st to reduce vehicle squat.
Diagnosis (See page CH-32)	When the ECM detects a malfunction, the ECM makes a diagnosis and memorizes the malfunctioning part.
Fail-safe (See page CH-32)	Even if a malfunction is detected in the sensors or solenoids, the ECM activates fail-safe control to prevent the vehicle’s drivability from being significantly affected.

2. Construction

The configuration of the electronic control system in the U250E automatic transaxle is as shown in the following chart.

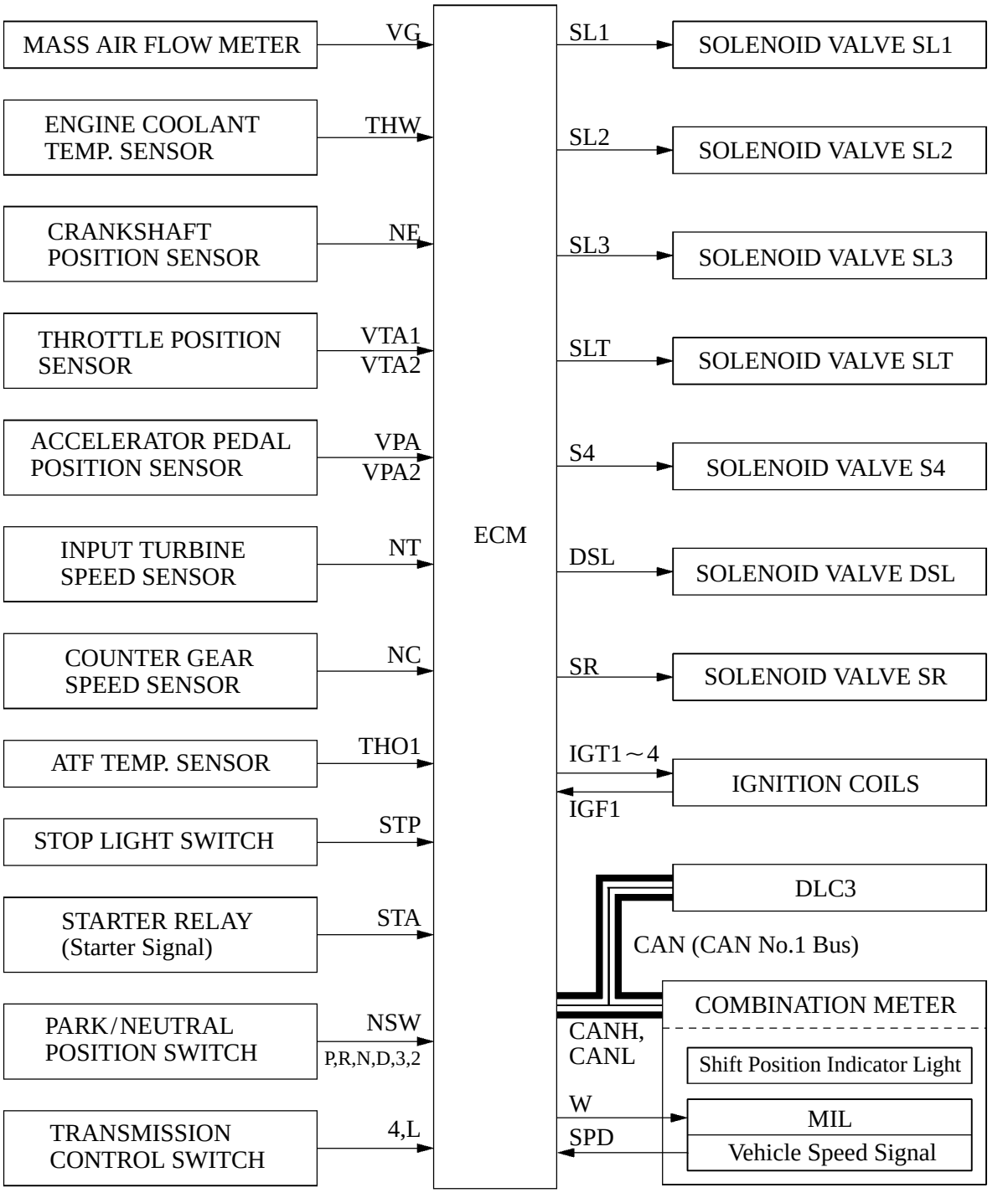

025CH12Y

3. Layout of Main Components

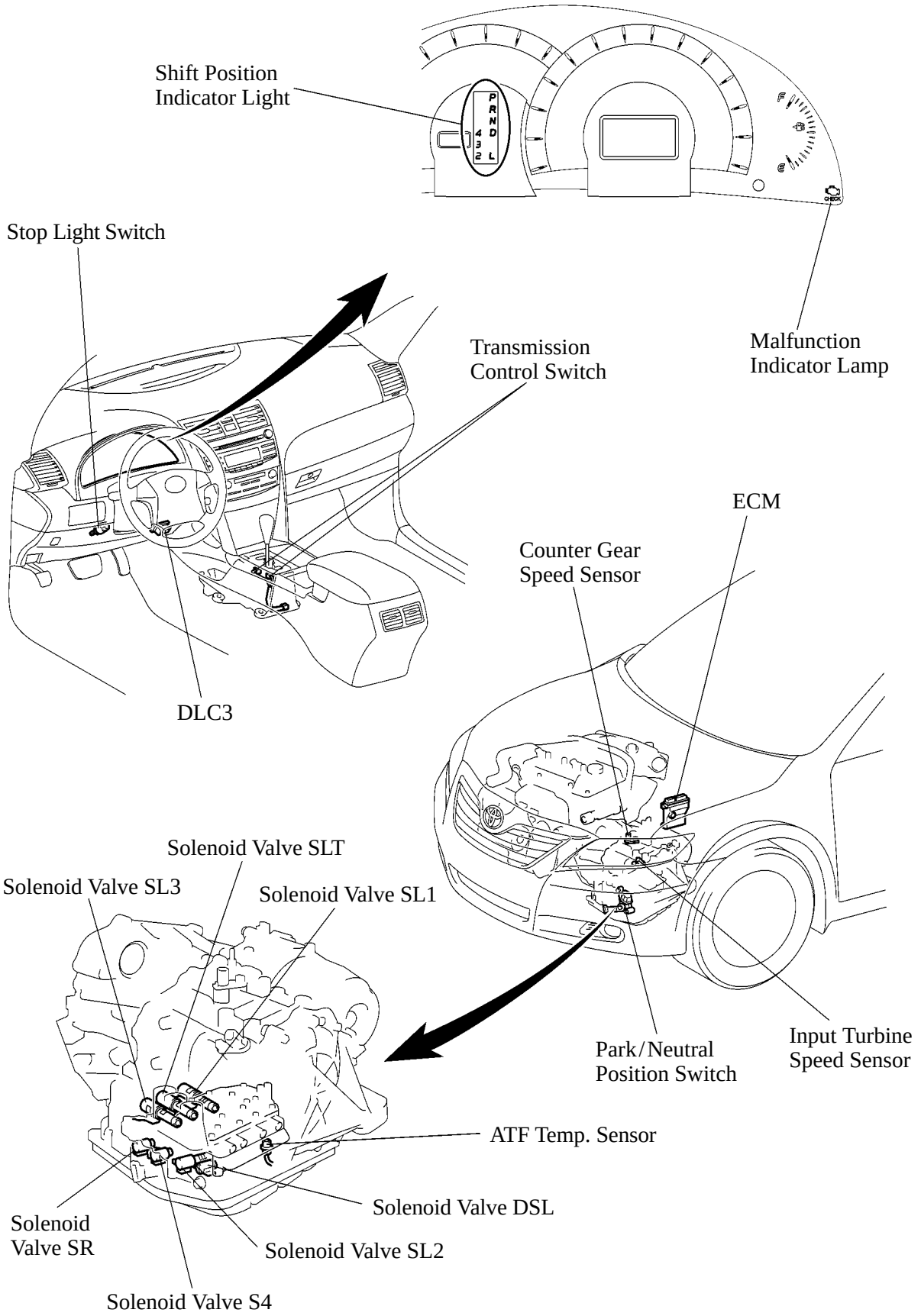

025CH13TE

4. Construction and Operation of Main Components

ATF Temperature Sensor

The ATF temperature sensor is installed in the valve body for direct detection of the fluid temperature.

The ATF temperature sensor is used for the revision of clutch and brake pressures to maintain a smooth shift quality every time.

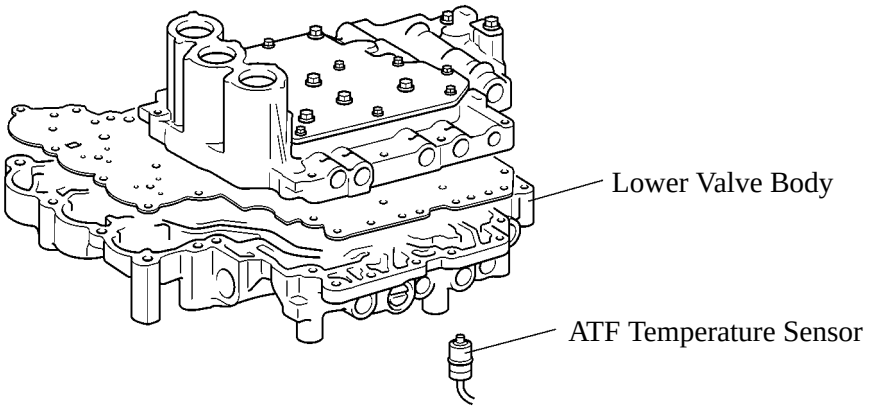

241CH87

Speed Sensors

The U250E automatic transaxle uses an input turbine speed sensor (for the NT signal) and a counter gear speed sensor (for the NC signal). Thus, the ECM can detect the timing of the shifting of the gears and appropriately control the engine torque and hydraulic pressure in response to the various conditions. These speed sensors are the pick-up coil type.

The input turbine speed sensor detects the input speed of the transaxle. The direct clutch (C_2) drum is used as the timing rotor for this sensor.

The counter gear speed sensor detects the speed of the counter gear. The counter drive gear is used as the timing rotor for this sensor.

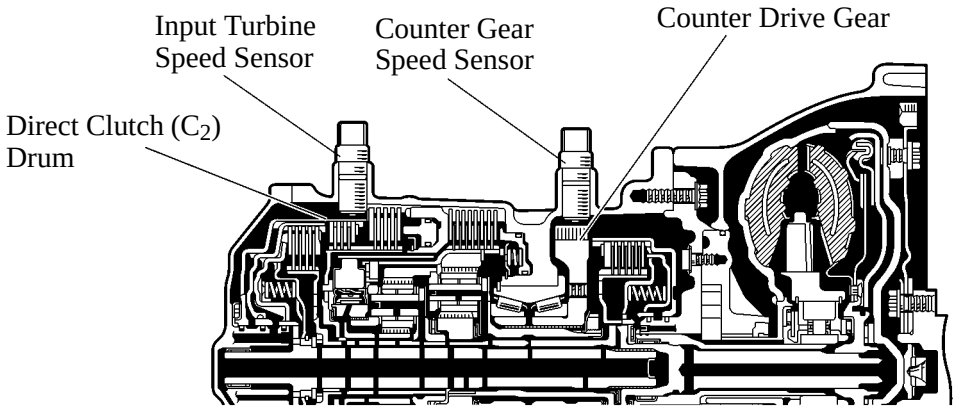

211CH16

Transmission Control Switch and Park/Neutral Position Switch

The ECM uses these switches to detect the shift lever position.

The park/neutral position switch sends the P, R, N, D, 3 and 2 position signals to the ECM.

The transmission control switch is installed inside the shift lever assembly. This switch sends the 4 and L position signals to the ECM.

The ECM sends these shift position signals to the combination meter (meter ECU) through CAN communication. The combination meter (meter ECU) controls the shift position indicator light based on these signals.

▶ **Wiring Diagram ●**

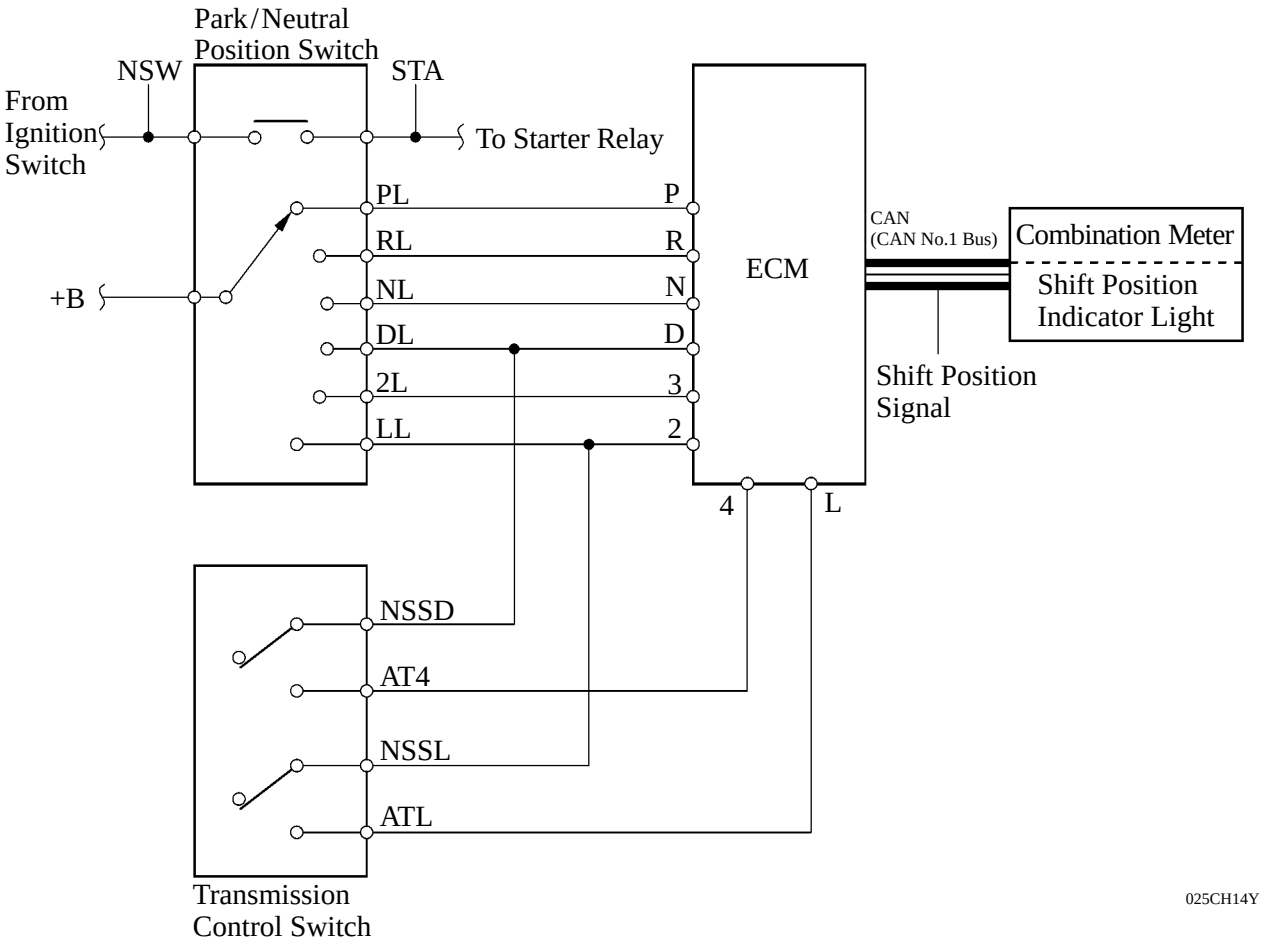

5. Clutch Pressure Control

Clutch to Clutch Pressure Control

This control is used for shifting from the 2nd to 3rd gear, and from the 3rd to 4th gear.

Solenoid valves actuate SL1, SL2, and SL3 in accordance with the signals from the ECM, and guide this output pressure directly to the control valves B_1, C_0, and C_1 in order to regulate the line pressure that acts on the B_1 brake, C_0 and C_1 clutches. As a result, compact B_1, C_0 and C_1 accumulators without a back pressure chamber have been realized.

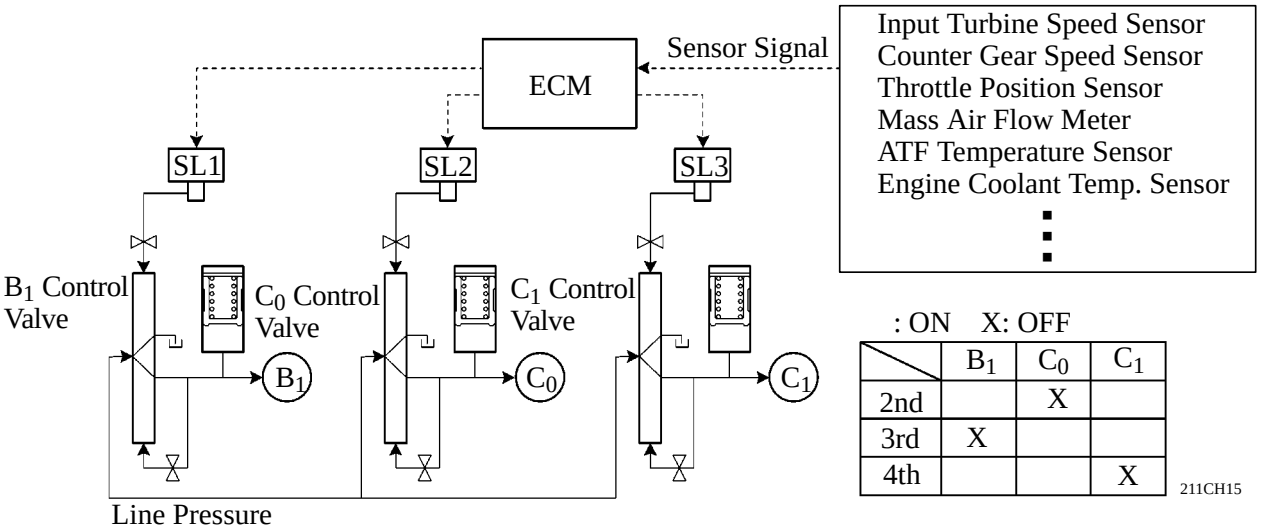

: ON X: OFF

	B_1	C_0	C_1
2nd		X	
3rd	X		
4th			X

Clutch Pressure Optimal Control

The ECM monitors the signals from various types of sensor such as the input turbine speed sensor, allowing shift solenoid valves SL1, SL2, and SL3 to minutely control the clutch pressure in accordance with engine output and driving conditions. As a result, smooth shift characteristics have been realized.

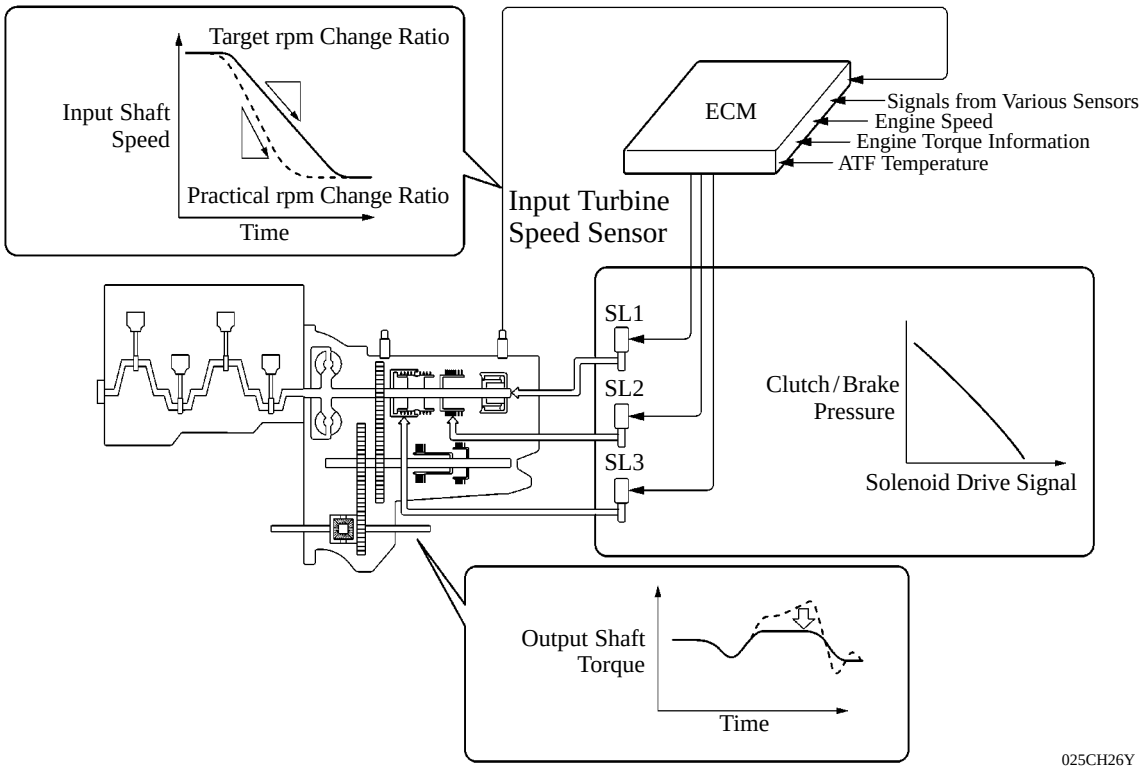

6. Line Pressure Optimal Control

The line pressure is controlled by using solenoid valve SLT. Through the use of solenoid valve SLT, the line pressure is optimally controlled in accordance with the engine torque information, as well as with the internal operating conditions of the torque converter and the transaxle. Accordingly, the line pressure can be accurately controlled in accordance with the engine output, traveling condition, and the ATF temperature, thus realizing smooth shift characteristics and optimizing the workload of the oil pump.

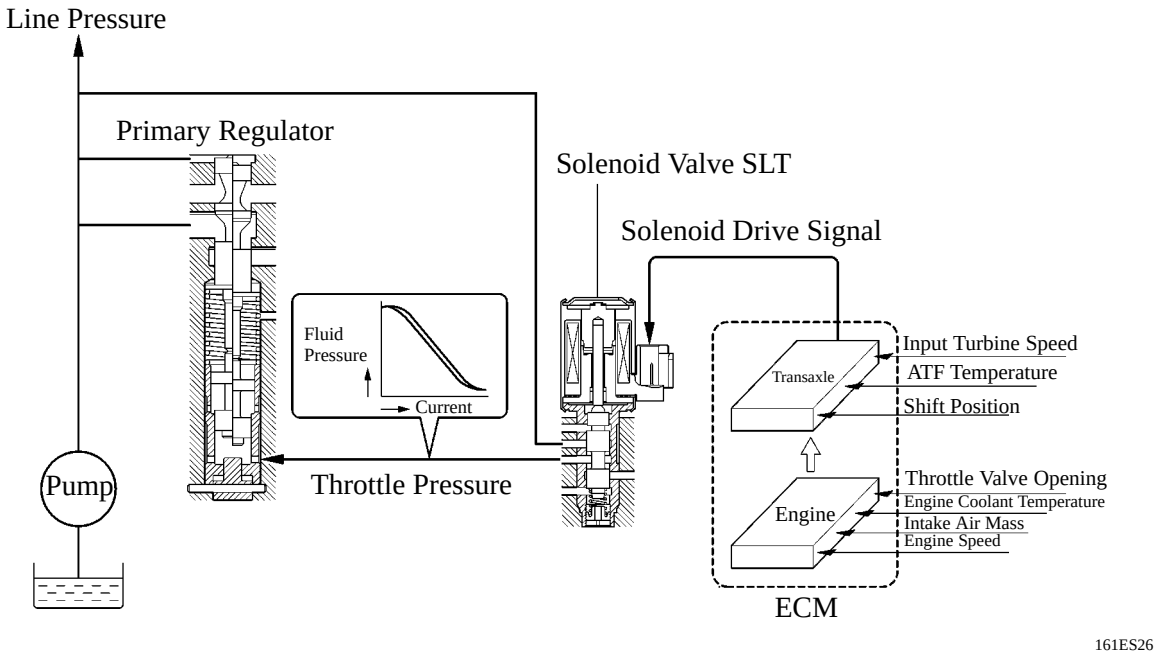

7. Shifting Control in Uphill/Downhill Traveling

General

This control helps minimize the shifting of gears when the driver operates the accelerator pedal while driving on a winding road with ups and downs, in order to ensure a smooth drive.

Shift Control in Uphill Traveling

When the ECM determines uphill travel, it prohibits the transaxle from shifting up into 5th after the transaxle has shifted down below 4th.

When the ECM determines uphill travel with a steeper grade, it prohibits the transaxle from shifting up into 4th after the transaxle has shifted down below 3rd.

Shift Control in Downhill Traveling

When the ECM determines downhill travel, it shifts down the transaxle from 5th to 4th in accordance with the brake operation signal that is input when the driver operates the brake pedal.

When the ECM determines downhill travel with a steeper grade, and a brake operation signal is input again, the ECM shifts the transaxle down from 4th to 3rd.

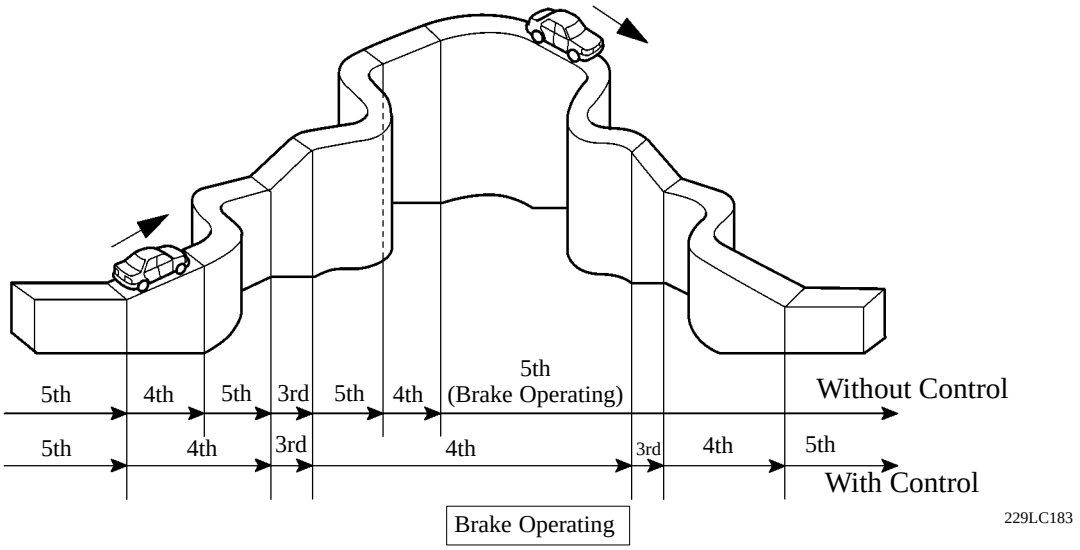

Uphill/Downhill Judgment

The actual acceleration calculated from the speed sensor signal is compared with the reference acceleration stored in the ECM to judge uphill or downhill traveling.

Actual Acceleration < Reference Acceleration

Actual Acceleration > Reference Acceleration

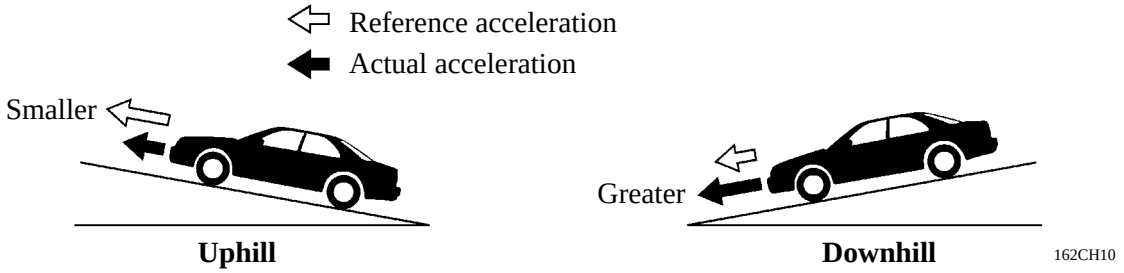

8. Flex Lock-up Clutch Control

In addition to the conventional lock-up timing control, flex lock-up clutch control is used.

This flex lock-up clutch control regulates solenoid valve SL2 as an intermediate mode between the ON and OFF operations of the lock-up clutch.

The flex lock-up clutch control operates during acceleration, in the 4th and 5th gear in the D range, and during deceleration, in the 4th and 5th gear in the D range, and in the 4th gear in the 4 range.

During acceleration, the partition control of the power transmission between the lock-up clutch and torque converter greatly boosts the transmission efficiency in accordance with the driving conditions, improving the fuel economy.

During deceleration, the lock-up clutch is made to operate. Therefore the fuel-cut area is expanded and fuel economy is improved.

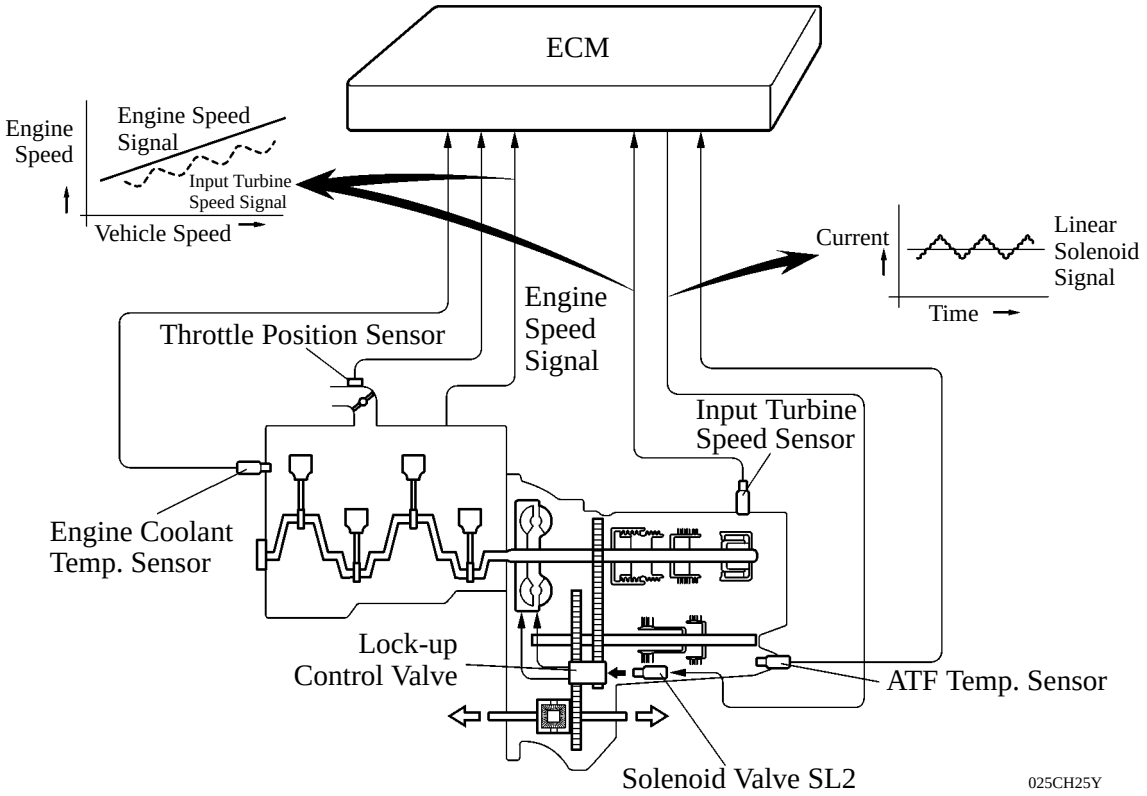

▶ Flex Lock-up Operation ●

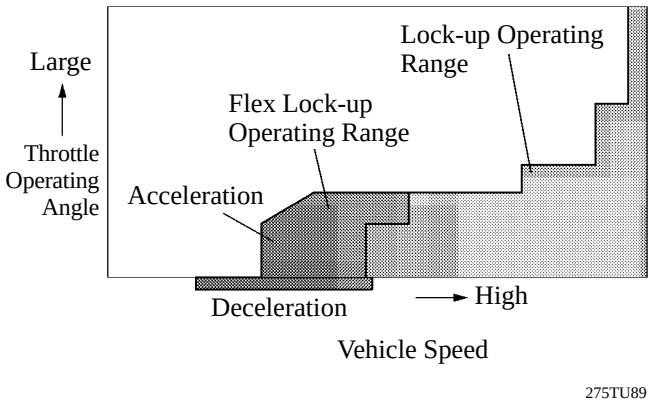

Flex Lock-up Timing

Range	Gear	Acceleration Flex Lock-up	Deceleration Flex Lock-up
D	1st	X	X
	2nd	X	X
	3rd	X	X
	4th		
	5th		
4	1st	X	X
	2nd	X	X
	3rd	X	X
	4th	X	

: Operates X: Does not operate

9. Diagnosis

When the ECM detects a malfunction, the ECM makes a diagnosis and memorizes the information related to the fault. Furthermore, the MIL (Malfunction Indicator Lamp) in the combination meter illuminates or blinks to inform the driver of the malfunction.

At the same time, the DTC (Diagnosis Trouble Code) are stored in the memory. The DTC can be read by connecting a hand-held tester.

For details, see the 2007 Camry Repair Manual (Pub. No. RM0250U).

Service Tip

The ECM uses the CAN protocol for diagnostic communication. Therefore, a hand-held tester and a dedicated adapter [CAN VIM (Vehicle Interface Module)] are required for accessing diagnostic data. For details, see the 2007 Camry Repair Manual (Pub. No. RM0250U).

10. Fail-safe

This function minimizes the loss of operation when any abnormality occurs in a sensor or solenoid.

▶ Fail-safe Control List ●

Malfunction Part	Function
Speed Sensor	During a speed sensor malfunction, the vehicle speed is detected through the signals from the counter gear speed sensor to effect normal control.
Counter Gear Speed Sensor	During a counter gear speed sensor malfunction, 5th upshift is prohibited.
ATF Temp. Sensor	During a ATF temperature sensor malfunction, 5th upshift is prohibited.
Solenoid Valve SL1, SL2, SL3, and S4	The current to the failed solenoid valve is cut off and control is effected by operating other solenoid valves with normal operation. Shift control is effected as described in the table in the next page, depending on the failed solenoid. Even if the engine starts under this condition, the gear position remains where it was before.

: ON Δ: According to Flex Lock-up X: OFF

Normal	Solenoid Valve	SL1		X		X	X
		SL2			X	Δ	Δ
		SL3	X	X	X		
		S4	X	X	X	X	
	Gear Position		1st	2nd	3rd	4th	5th
SL1 Malfunction (During driving at 1st or 2nd)	Solenoid Valve	SL1	X				
		SL2					
		SL3	X	X	X	Δ X	Δ X
		S4	X	X	X	X	Δ X
	Gear Position		1st Δ 2nd	2nd	3rd Δ 2nd	4th Δ 2nd	5th Δ 2nd
SL1 Malfunction (During driving at 3rd)	Solenoid Valve	SL1	X				
		SL2	Δ Δ	Δ Δ	Δ	Δ	Δ
		SL3	X	X	X	Δ X	Δ X
		S4	X Δ	X Δ	X Δ	X Δ	
	Gear Position		1st Δ 4th	2nd Δ 4th	3rd Δ 4th	4th	5th Δ 4th
SL1 Malfunction (During driving at 4th or 5th)	Solenoid Valve	SL1	X				
		SL2	Δ Δ	Δ Δ	Δ	Δ	Δ
		SL3	X Δ	X Δ	X Δ		
		S4	X	X	X	X	
	Gear Position		1st Δ 4th	2nd Δ 4th	3rd Δ 4th	4th	5th
SL2 Malfunction	Solenoid Valve	SL1		X Δ		X Δ	X Δ
		SL2	X				
		SL3	X	X	X	Δ X	Δ X
		S4	X Δ	X Δ	X Δ	X Δ	
	Gear Position		1st Δ 4th	2nd Δ 4th	3rd Δ 4th	4th	5th Δ 4th
SL3 Malfunction	Solenoid Valve	SL1		X		X Δ	X Δ
		SL2			X	Δ	Δ
		SL3	X				
		S4	X	X	X	X Δ	
	Gear Position		1st	2nd	3rd	4th	5th Δ 4th
S4 Malfunction	Solenoid Valve	SL1		X		X	X
		SL2			X	Δ	Δ
		SL3	X	X	X		
		S4	X				
	Gear Position		1st	2nd	3rd	4th	5th Δ 4th
SL1, SL2, SL3, and S4 Malfunction	Solenoid Valve	SL1	X				
		SL2	X				
		SL3	X				
		S4	X				
	Gear Position		1st Δ 4th	2nd Δ 4th	3rd Δ 4th	4th	5th Δ 4th

▪ SHIFT CONTROL MECHANISM

1. General

A gate type shift lever is used in conjunction with the 5-speed automatic transaxle. With the gate type lever, the shift lever button and the overdrive switch of the straight type (L gate type) shift lever are discontinued. Similar functions are achieved through a single-shift operation (fore-aft and side-to-side).

The shift control cable with a length adjustment mechanism is used.

A shift lock system is used.

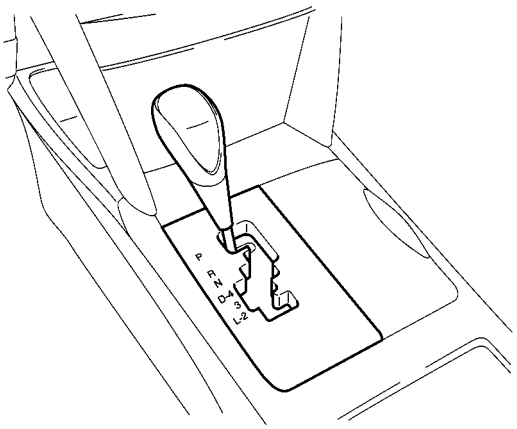

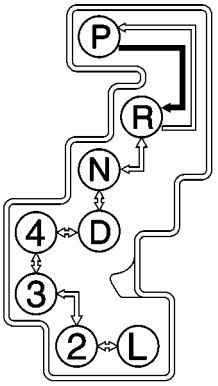

: The shift lever can be moved only with the ignition switch in the ON position and the brake pedal depressed.

: The shift lever can be moved at anytime.

025CH15TE

Service Tip

The shift control cable is fixed by the lock piece of the adjustment mechanism. Adjustment of the shift control cable is possible by releasing the lock piece from the cable. For details, see the 2007 Camry Repair Manual (Pub. No. RM0250U).

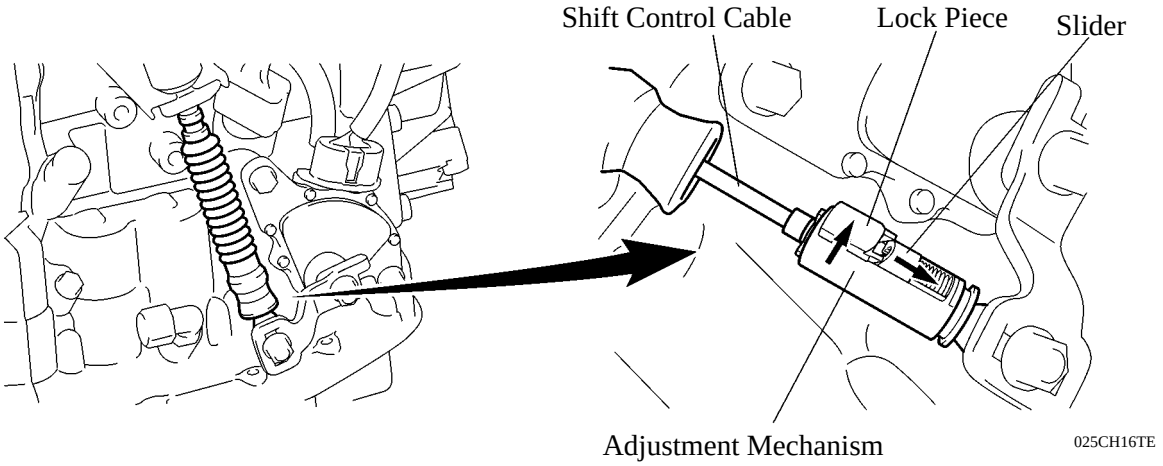

025CH16TE

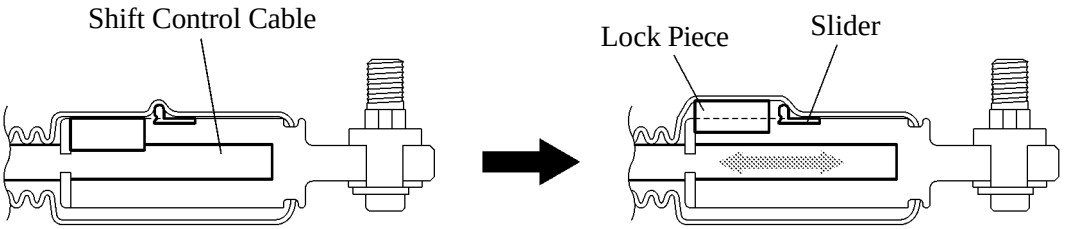

Adjustment Mechanism Cross Section

01YCH48TE

2. Shift Lock System

General

The key interlock device prevents the key from being pulled out after the ignition switch is turned OFF, unless the shift lever is moved to the P position. Thus, the driver is urged to park the vehicle in the P position.

The shift lock mechanism prevents the shift lever from being shifted to any position other than the P position, unless the ignition switch is ON, and the brake pedal is depressed. This mechanism helps to prevent unintentional acceleration.

The shift lock system mainly consists of the shift lock ECU, shift lock solenoid, key interlock solenoid and shift lock override button.

The shift lock solenoid has a built-in P detection switch.

▶ System Diagram ●

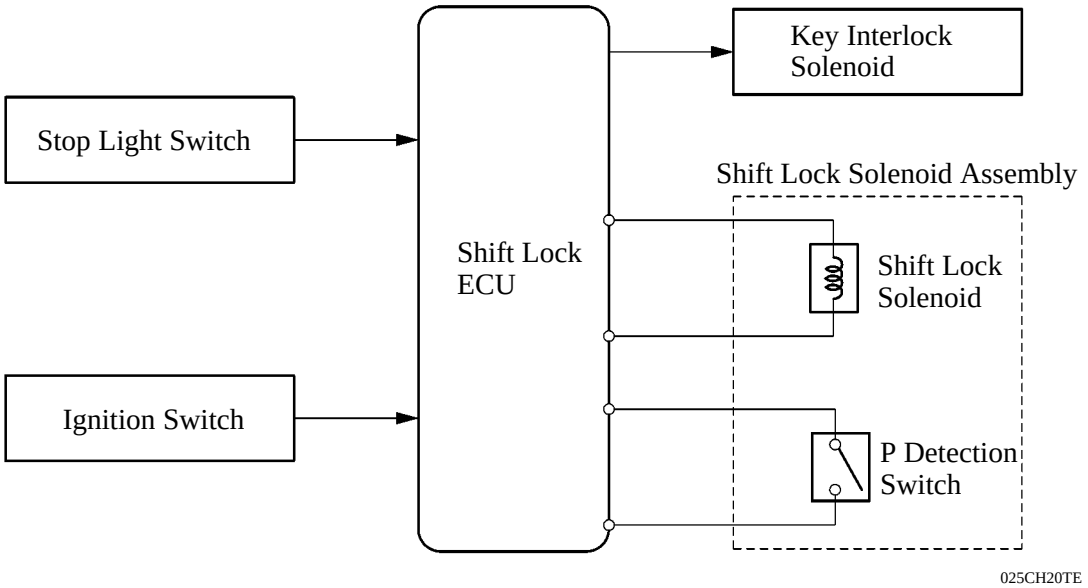

Layout of Main Components

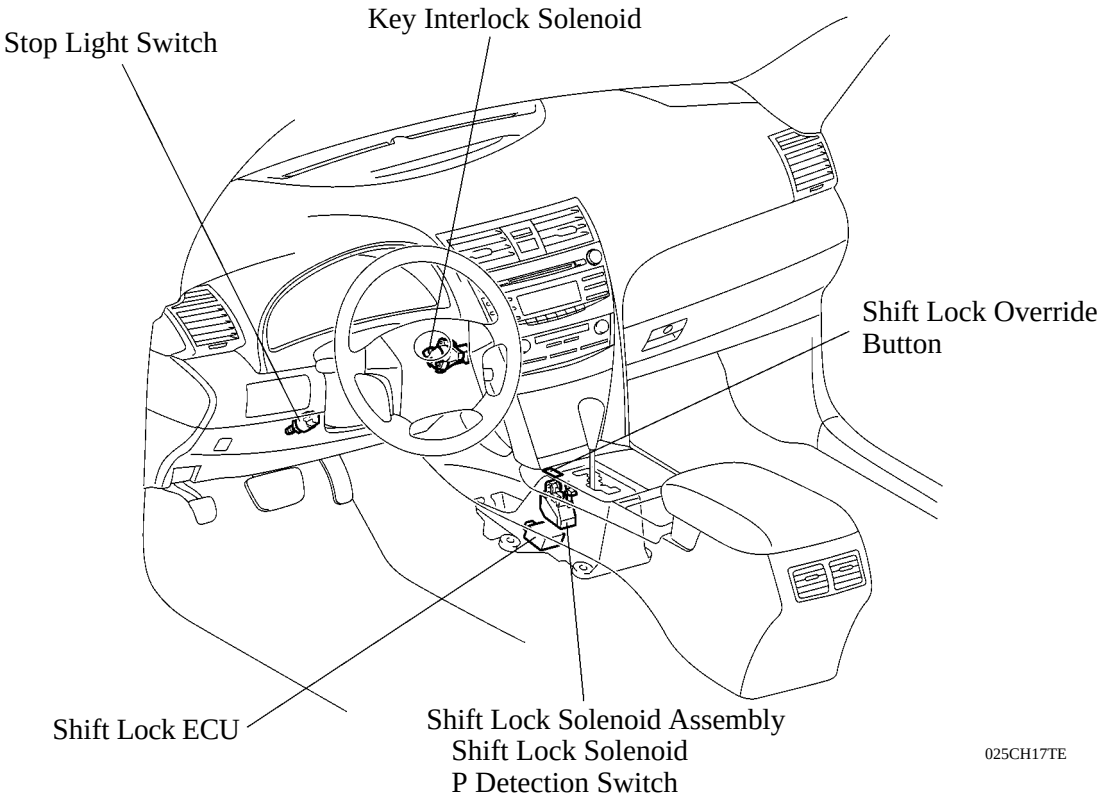

Key Interlock Solenoid

The activation of the key interlock solenoid that is mounted on the upper column bracket moves the lock pin to restrict the movement of the key cylinder. Therefore, if the shift lever is shifted to any position other than “P”, the ignition key cannot be moved from “ACC” to the “LOCK” position.

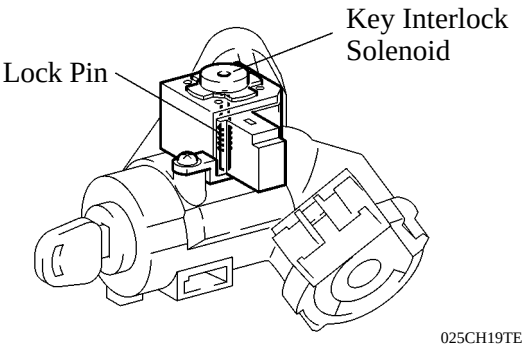

System Operation

The shift lock ECU uses the P detection switch to detect the shift lever position, and receives inputs from the stop light switch and the ignition switch. Upon receiving these signals, the shift lock ECU turns ON the key interlock solenoid and the shift lock solenoid in order to release the key interlock and shift lock.

A shift lock override button, which manually overrides the shift lock mechanism, is used.

U660E AUTOMATIC TRANSAXLE

DESCRIPTION

A newly developed U660E automatic transaxle is used on the 2GR-FE engine models. This automatic transaxle is a compact, lightweight and high-capacity 6-speed Super ECT (Electronically Controlled Transaxle).

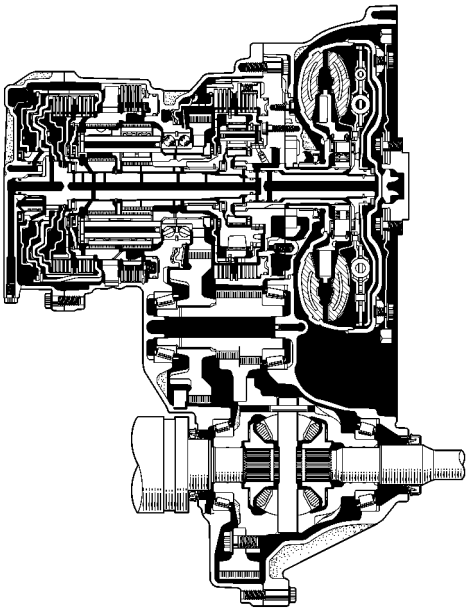

01YCH01Y

▶ Specifications ●

Model		’07 Camry	’06 Camry
Transaxle Type		U660E	U151E
Gear Ratio	1st	3.300	4.235*1
	2nd	1.900	2.360*1
	3rd	1.420	1.517*1
	4th	1.000	1.047*1
	5th	0.713	0.756*1
	6th	0.608	—
	Reverse	4.148	3.378*1
Differential Gear Ratio		3.685*1	3.291
Fluid Capacity*2	Liters (US qts, Imp. qts)	6.57 (6.94, 5.78)	8.9 (9.4, 7.8)
Fluid Type		Toyota Genuine ATF WS	ATF Type T-IV
Weight (Reference)*3	kg (lb)	94.4 (208.1)	101 (222.2)

*1: Counter gear ratio included
*2: Differential included
*3: Weight shows the figure with the fluid filled to the maximum level.

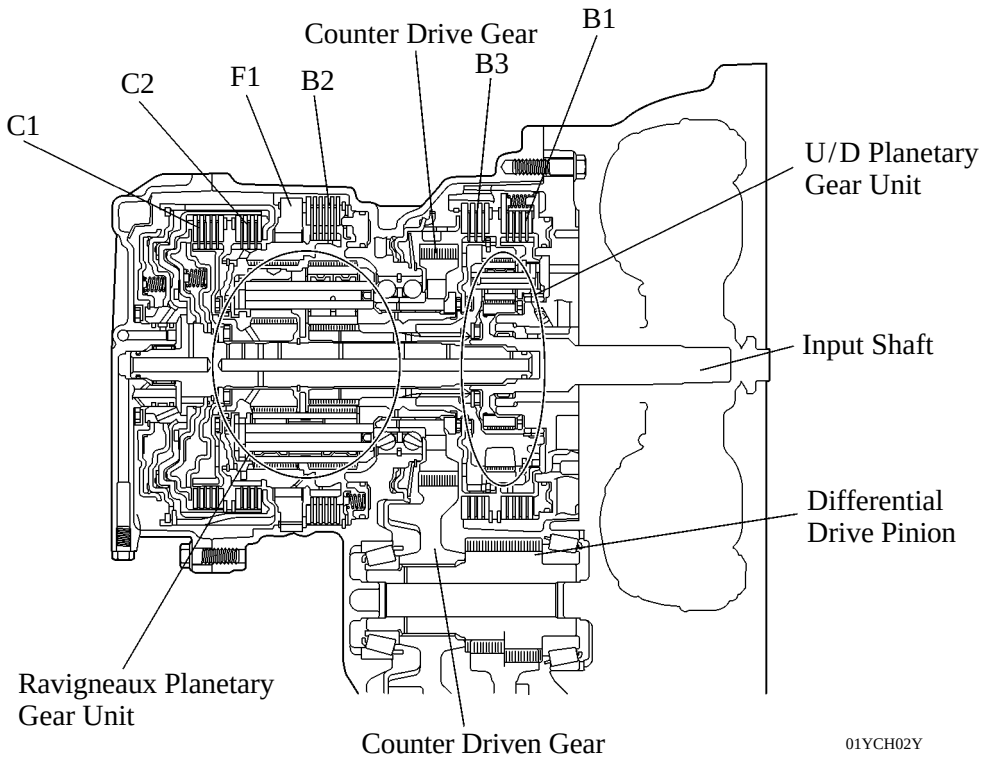

▶ **Specifications** ●

C1	No.1 Clutch	The No. of Discs	4
C2	No.2 Clutch		3
B1	No.1 Brake		4
B2	No.2 Brake		5
B3	No.3 Brake		3
F1	No.1 One-Way Clutch	The No. of Sprags	20
Ravigneaux Planetary Gear Unit		The No. of Front Sun Gear Teeth	30
		The No. of Rear Sun Gear Teeth	27
		The No. of Long Pinion Gear Teeth	20
		The No. of Short Pinion Gear Teeth	22
		The No. of Ring Gear Teeth	69
U/D Planetary Gear Unit		The No. of Sun Gear Teeth	66
		The No. of Pinion Gear Teeth	21
		The No. of Ring Gear Teeth	110
Counter Gear		The No. of Drive Gear Teeth	44
		The No. of Driven Gear Teeth	47

▶DIFFERENTIAL CASE

The curvature of the differential case opening, where tensile stress is concentrated during driving, is enlarged, in order to moderate the stress concentration and enhance the differential gear tolerant torque. As a result, use of the lightweight 2-pinion differential gears is possible.

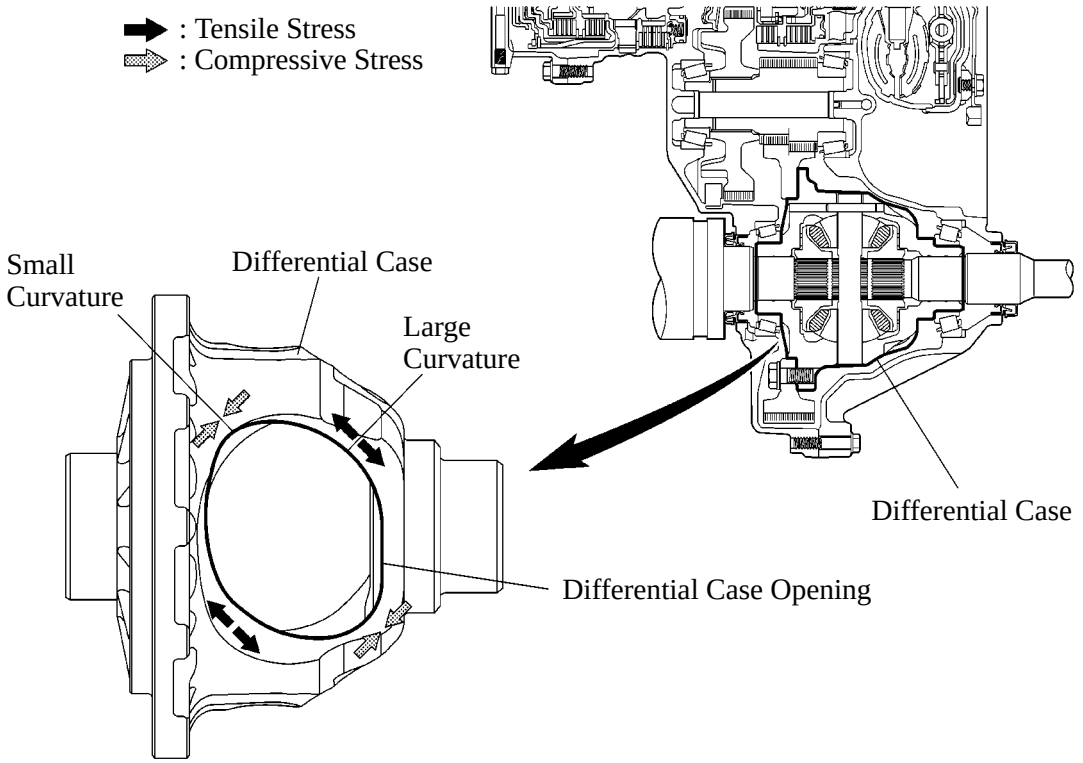

Stresses Applied to Differential Case Opening during Driving

01YCH04Y

●ATF (AUTOMATIC TRANSMISSION FLUID) WS

▶ATF WS is used to reduce the resistance of the ATF and improve the fuel economy by reducing its viscosity in the practical operating temperature range. At higher fluid temperatures, the viscosity is the same as that of ATF Type T-IV, which ensures the durability of the automatic transaxle.

▶ATF WS and other types of ATF (ATF Type T-IV, D-II.) are not interchangeable.

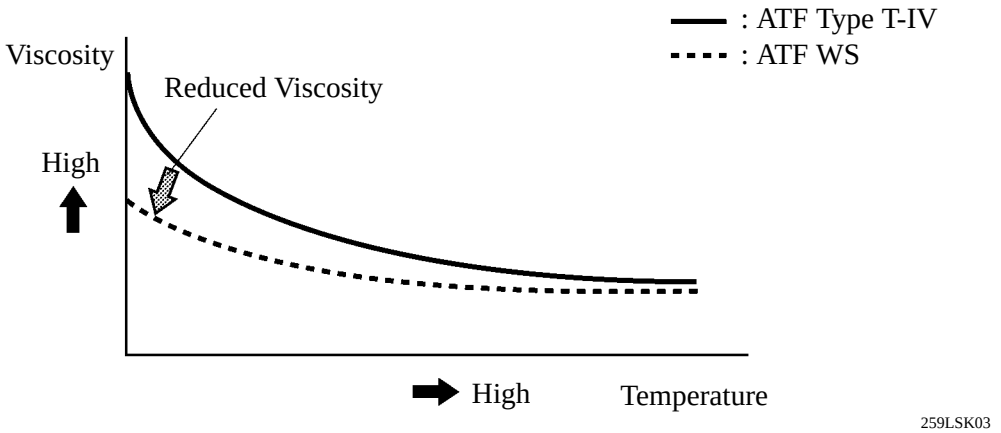

▪ TORQUE CONVERTER

A compact, lightweight and high-capacity torque converter is used.
In order to make the torque converter more compact and shorten its total length, the pump impeller and turbine runner portions have been made narrower, and the structure of the one-way clutch has been simplified.
This torque converter has optimally designed fluid passages and impeller configuration resulting in substantially enhanced transmission efficiency to ensure better starting, acceleration and fuel economy.
Furthermore, a hydraulically operated lock-up mechanism, which enables the lock-up (flex lock-up) operation at low to high vehicle speeds, is used to reduce the slip loss of the torque converter.

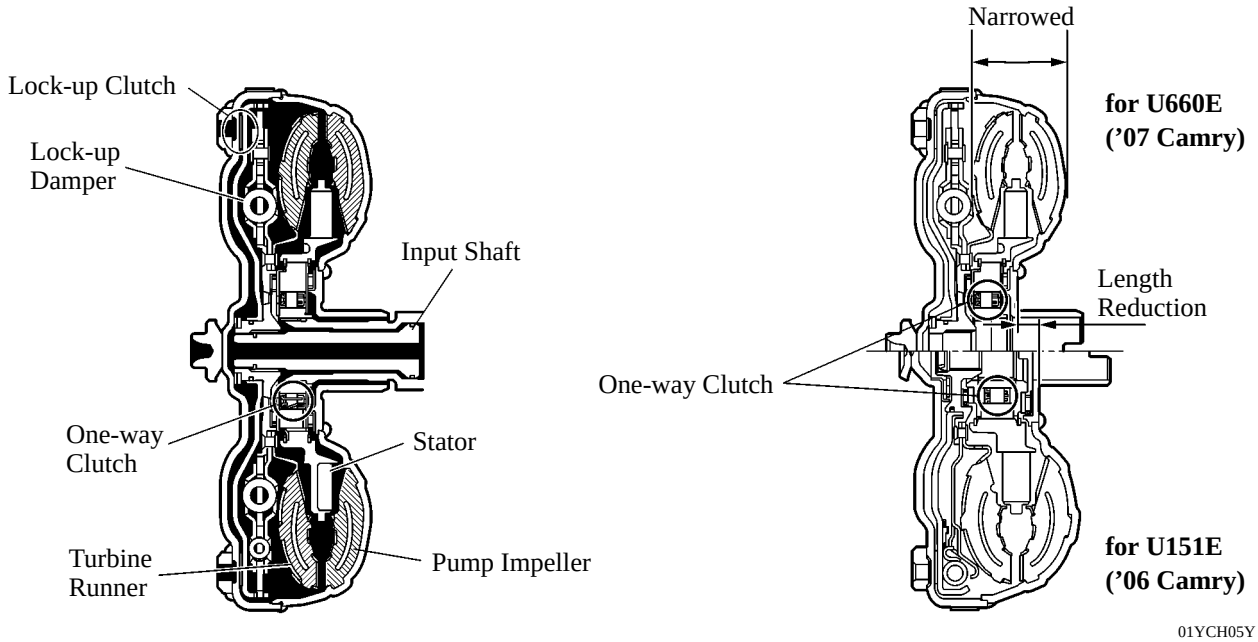

▶ **Specifications ●**

Model	'07 Camry	'06 Camry
Transaxle Type	U660E	U151E
Torque Converter Type	3-Element, 1-Step, 2-Phase	Δ
Stall Torque Ratio	1.80	1.75

▪ OIL PUMP

The oil pump is operated by the torque converter. It lubricates the planetary gear units and supplies operating fluid pressure for hydraulic control.
The pump cover is made of aluminum to reduce weight.

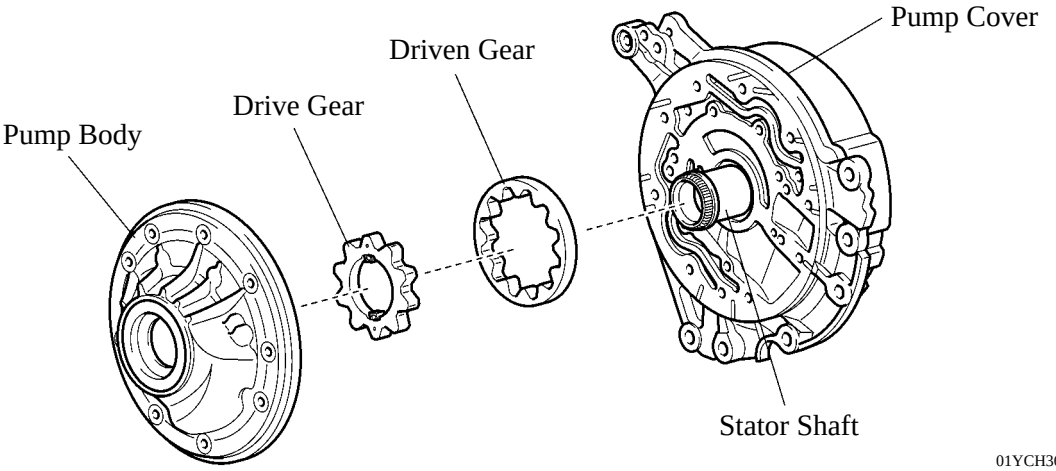

●OIL STRAINER

A felt type oil strainer is used because it is lightweight, provides excellent filtering ability, is more reliable and free from maintenance.

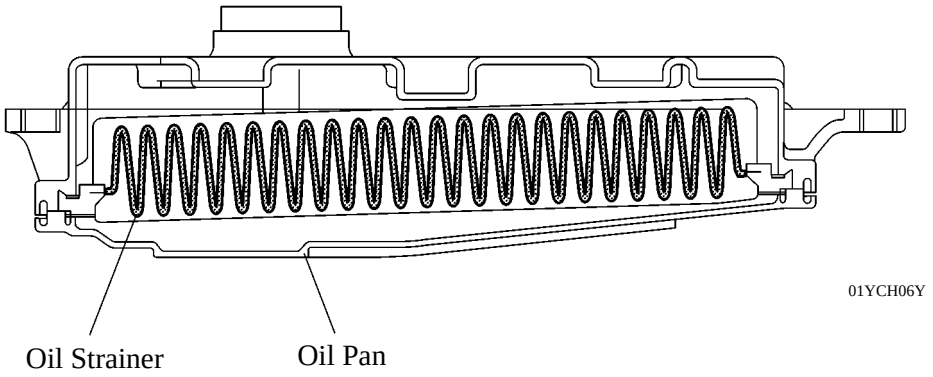

●ATF FILLING PROCEDURES

▶The ATF filling procedure is changed in order to improve the accuracy of the ATF level when the transaxle is being repaired or replaced. As a result, the oil filler tube and the oil level gauge used for a conventional automatic transaxle are discontinued, eliminating the need to inspect the fluid level as a part of routine maintenance.

▶This filling procedure employs a refill plug, overflow plug, ATF temperature sensor, and shift indicator light “D”. After the transaxle is refilled with ATF, remove the overflow plug and drain the extra ATF at the proper ATF temperature. Thus, the appropriate ATF level can be obtained. For details about the ATF filling procedure, refer to the Service Tip on the next page.

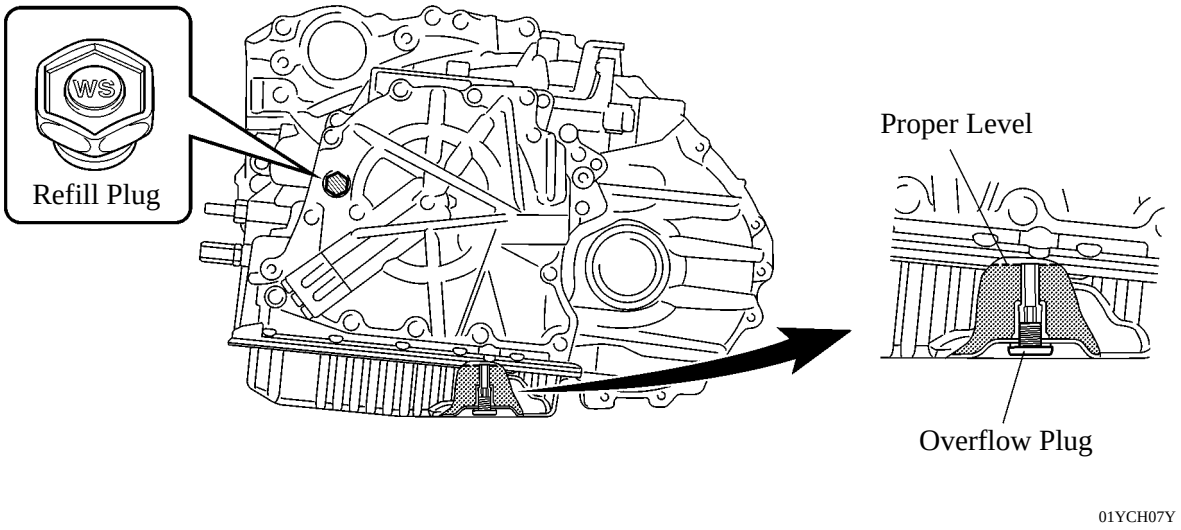

Service Tip

ATF Filling procedure using SST (09843-18040)

When a large amount of ATF needs to be filled (i.e. after removal and installation of oil pan or torque converter), perform the procedure from step 1.
When a small amount of ATF is required (i.e. removal and installation of oil cooler tube, repair of a minor oil leak), perform the procedure from step 7.

1) Raise the vehicle while keeping it level.
2) Remove the refill plug and overflow plug.
3) Fill the transaxle with WS type ATF through the refill plug hole until it overflows from the overflow plug hole.
   ▶ATF WS must be used to fill the transaxle.
4) Reinstall the overflow plug.
5) Add the specified amount of ATF (specified amount is determined by the procedure that was performed) and reinstall the refill plug.

Example:

Procedure	Liters (US qts, Imp.qts)
Removal and installation of transaxle oil pan (including oil drainage)	2.9 (3.1, 2.6)
Removal and installation of transaxle valve body	3.3 (3.5, 2.9)
Replacement of torque converter	4.9 (5.2, 4.3)

6) Lower the vehicle
7) Use the SST (09843-18040) to make shorts between the TC and CG terminals of the DLC3 connector:
8) Start the engine and allow it to idle.
   ▶A/C switch must be turned off.
9) Move the shift lever from the P position to the S mode position and slowly selects each gear S1 - S6. Then move the shift lever back to the P position.

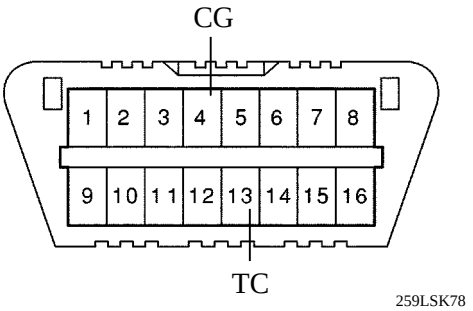

DLC3

10) Move the shift lever to the D position, and then quickly move it back and forth between N and D (at least once every 1.5 seconds) for at least 6 seconds. This will activate oil temperature detection mode.
    Standard: The shift position indicator light "D" remains illuminated for 2 seconds and then goes off.

11) Return the shift lever to the P position and disconnect the TC terminal.
12) Idle the engine to raise the ATF temperature.
13) Immediately after the shift position indicator "D" light turns on, lift the vehicle up.
    ▶The shift position indicator light "D" will indicate the ATF temperature according to the following table.

ATF Temp.	Lower than Optimal Temp.	Optimal Temp.	Higher than Optimal Temp.
Shift Position Indicator Light "D"	OFF	ON	Blinking

(Continued)

14) Remove the overflow plug and adjust the oil quantity.
    ▶ If the ATF overflows, go to step 17, and if the ATF does not overflow, go to step 15.
15) Remove the refill plug.
16) Add ATF through the refill plug hole until it flows out from the overflow plug hole.
17) When the ATF flow slows to a trickle, install the overflow plug and a new gasket.
18) Reinstall the refill plug (if the refill plug was removed).
19) Lower the vehicle.
20) Turn the ignition switch (engine switch) OFF to stop the engine.

For details about the ATF Filling procedures, see the 2007 Camry Repair Manual (Pub. No. RM0250U).

PLANETARY GEAR UNIT

1. Construction

▶ The 6-speed configuration has been achieved by using 2 planetary gear units, creating a 6-speed automatic transaxle.

▶ A Ravingneaux type planetary gear unit is used as the rear gear unit. The gear unit consists of pairs of sun gears (front and rear) and planetary pinion gears (long and short) with different diameters within a single planetary gear.

▶ The centrifugal fluid pressure canceling mechanism is used in the C1 and C2 clutches that are applied when shifting between the 1st to 6th gears. Refer to CH-51 for details.

▶ The shapes of the grooves in the clutches and brake linings have been optimized in order to reduce drag during clutch and brake operation.

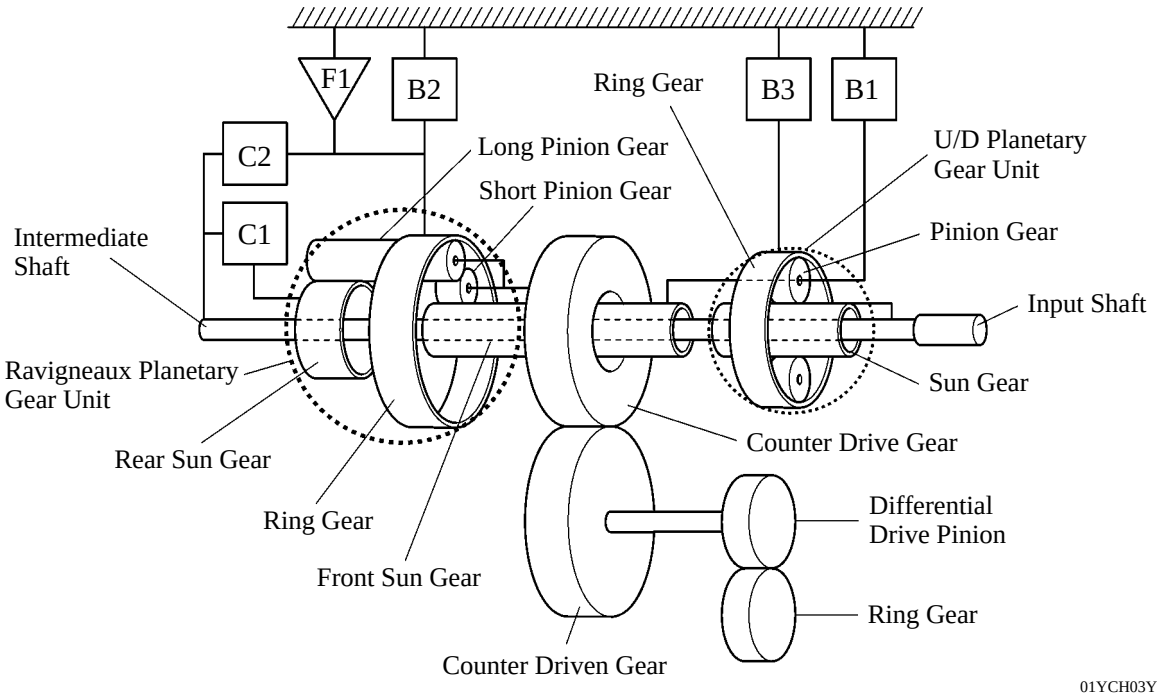

2. Function of Components

Component		Function
C1	No.1 Clutch	Connects intermediate shaft and Ravigneaux planetary rear sun gear.
C2	No.2 Clutch	Connects intermediate shaft and Ravigneaux planetary ring gear.
B1	No.1 Brake	Prevents Ravigneaux planetary front sun gear and U/D planetary carrier from turning either clockwise or counterclockwise.
B2	No.2 Brake	Prevents Ravigneaux planetary ring gear from turning either clockwise or counterclockwise.
B3	No.3 Brake	Prevents U/D planetary ring gear from turning either clockwise or counterclockwise.
F1	No.1 One-Way Clutch	Prevents Ravigneaux planetary ring gear from turning counterclockwise.
Planetary Gears		These gears change the route through which driving force is transmitted, in accordance with the operation of each clutch and brake, in order to increase or reduce the input and output speeds.

3. Transaxle Power Flow

Shift Lever Position	Gear	Solenoid Valve						Clutch		Brake			One-way Clutch
		SL	SL1	SL2	SL3	SL4	SLU	C1	C2	B1	B2	B3	F1
P	Park		▪										
R	Reverse	●				▪					▪	▪	
N	Neutral		▪										
D, S6	1st		▪					▪					▪
	2nd	▪	▪		▪		△	▪		▪			
	3rd	▪	▪			▪	△	▪				▪	
	4th	▪	▪	▪			△	▪	▪				
	5th	▪		▪		▪	△		▪			▪	
	6th	▪		▪	▪		△		▪	▪			
S5	1st		▪					▪					▪
	2nd	▪	▪		▪		△	▪		▪			
	3rd	▪	▪			▪	△	▪				▪	
	4th	▪	▪	▪			△	▪	▪				
	5th	▪		▪		▪	△		▪			▪	
S4	1st		▪					▪					▪
	2nd	▪	▪		▪		△	▪		▪			
	3rd	▪	▪			▪	△	▪				▪	
	4th	▪	▪	▪			△	▪	▪				
S3	1st		▪					▪					▪
	2nd		▪		▪			▪		▪			
	3rd		▪			▪		▪				▪	
S2	1st		▪					▪					▪
	2nd		▪		▪			▪		▪			
S1	1st		▪				▪	▪			▪		▪

▪ : ON △: In accordance with flex lock-up ▶: ON while engaging, OFF after engaged

1st Gear (S Mode 1 Range)

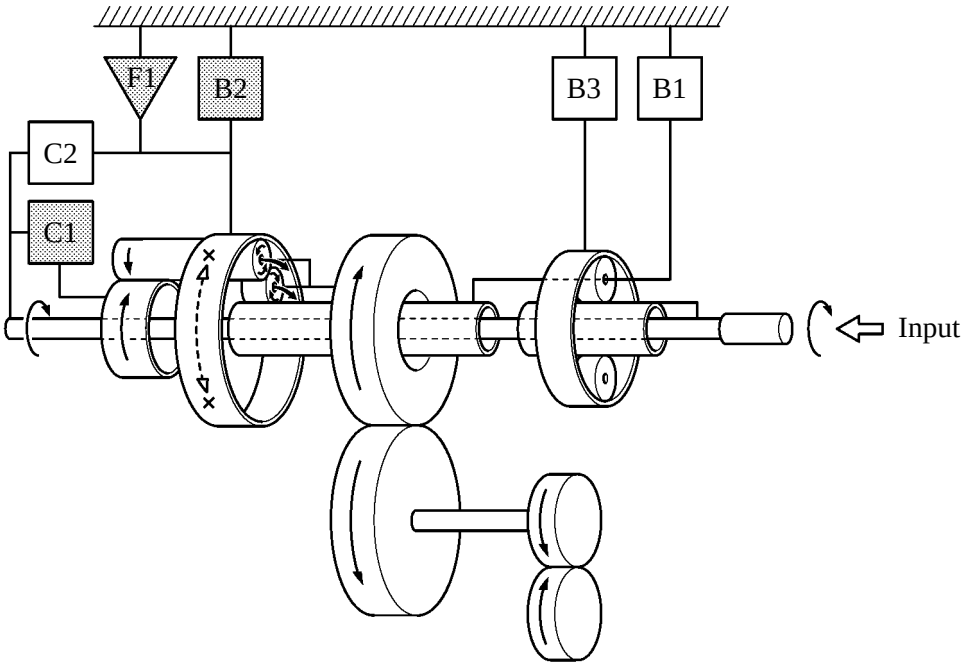

01YCH08Y

1st Gear (D Position or S Mode)

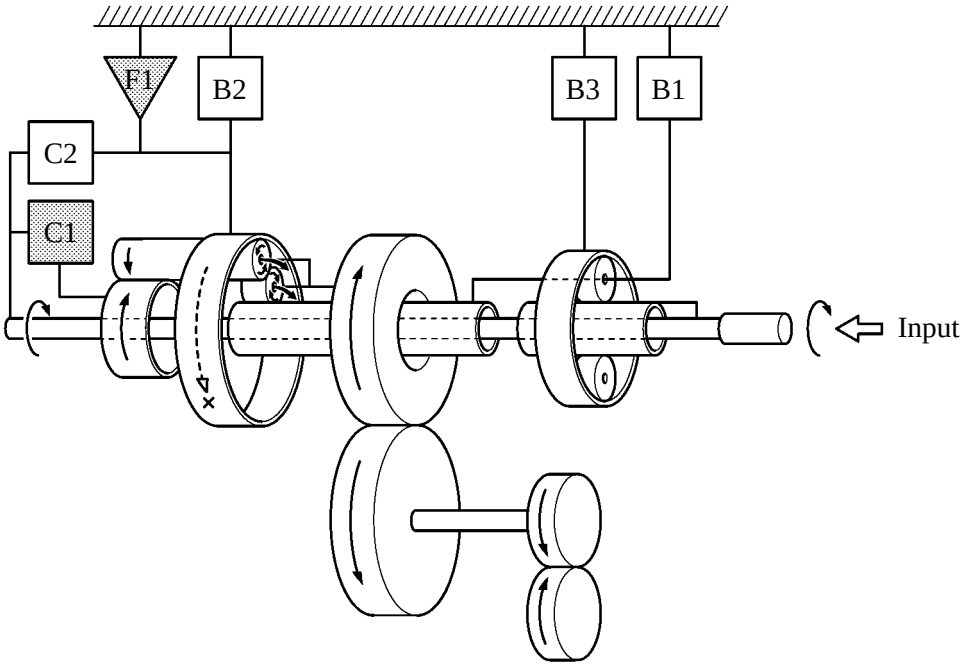

01YCH09Y

2nd Gear (D Position or S Mode)

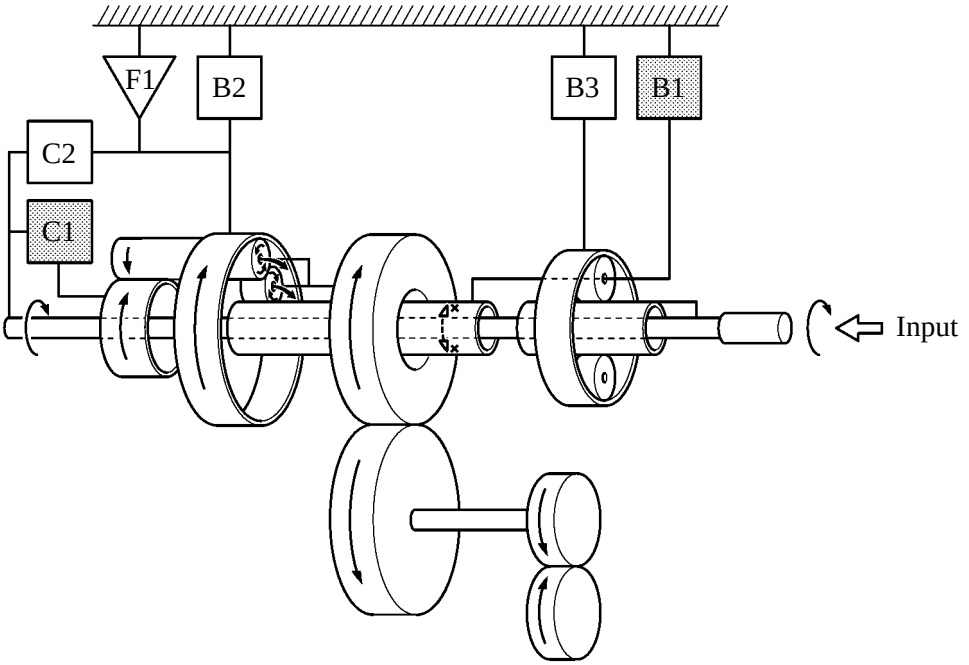

01YCH10Y

3rd Gear (D Position or S Mode)

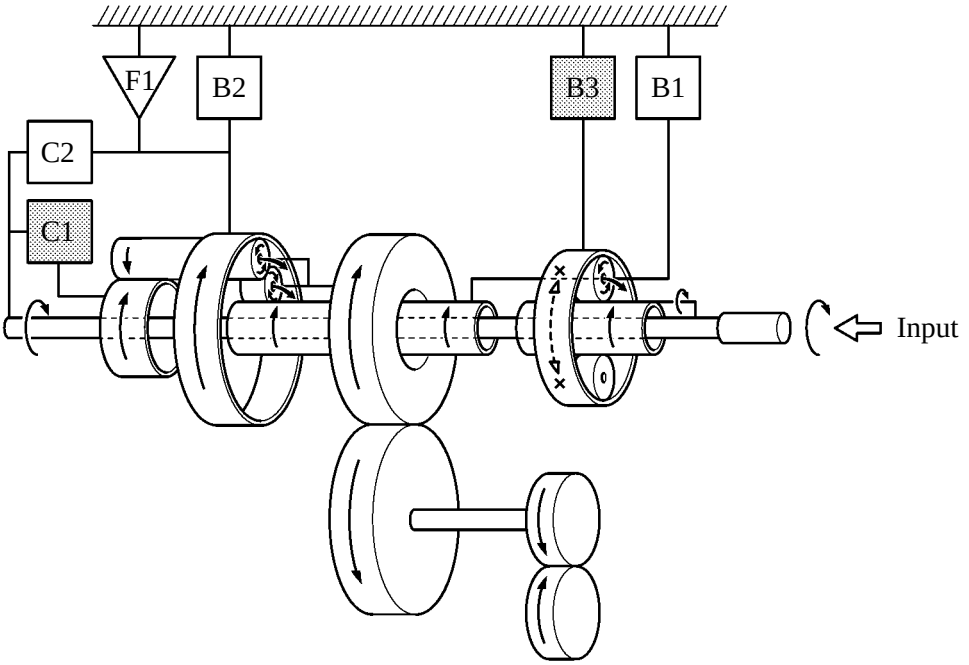

01YCH11Y

4th Gear (D Position or S Mode)

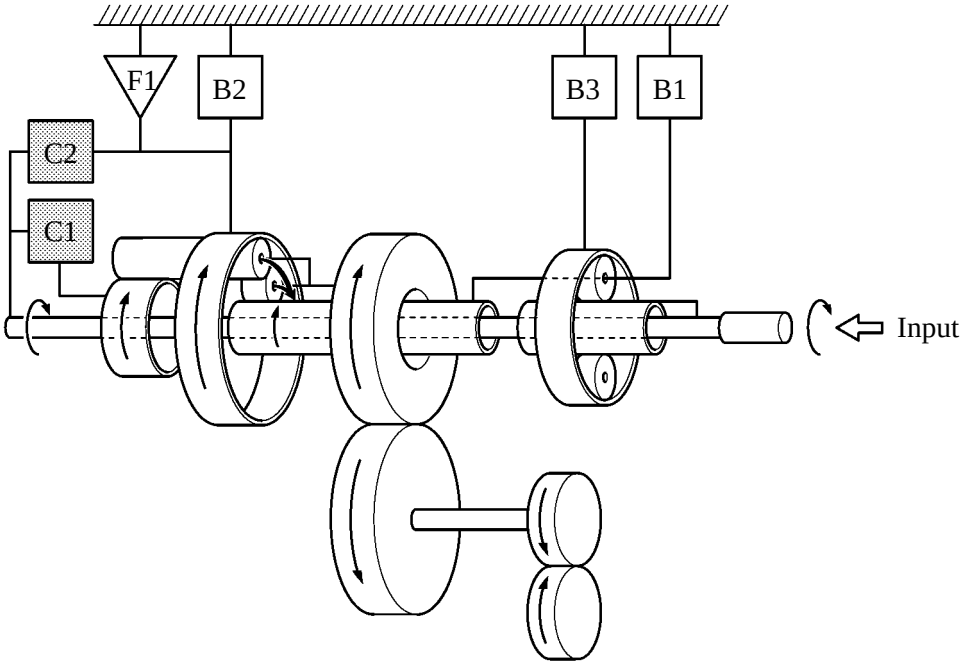

01YCH12Y

5th Gear (D Position or S Mode)

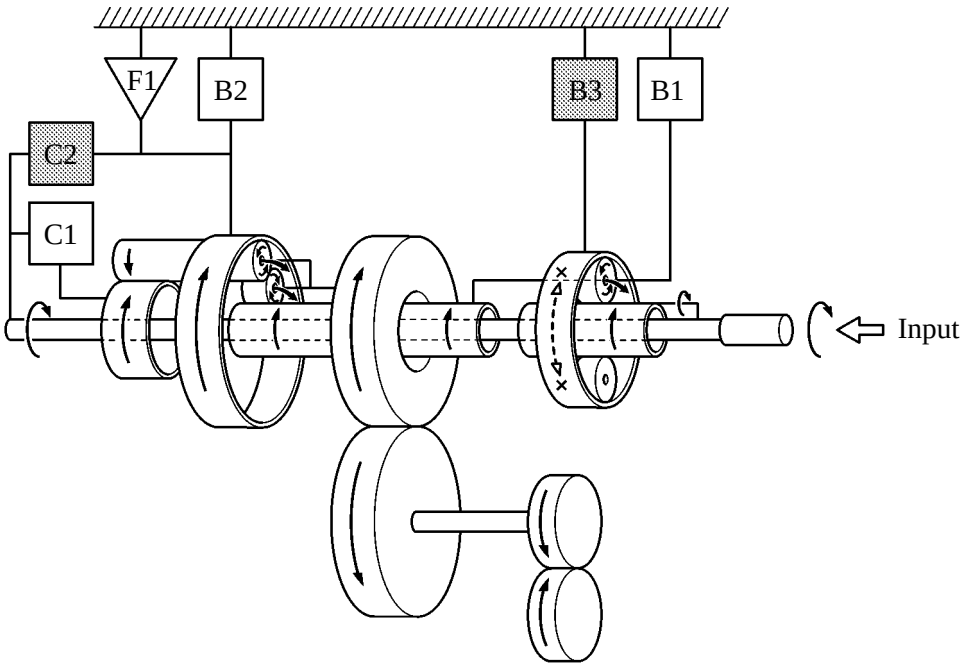

01YCH13Y

6th Gear (D Position or S Mode)

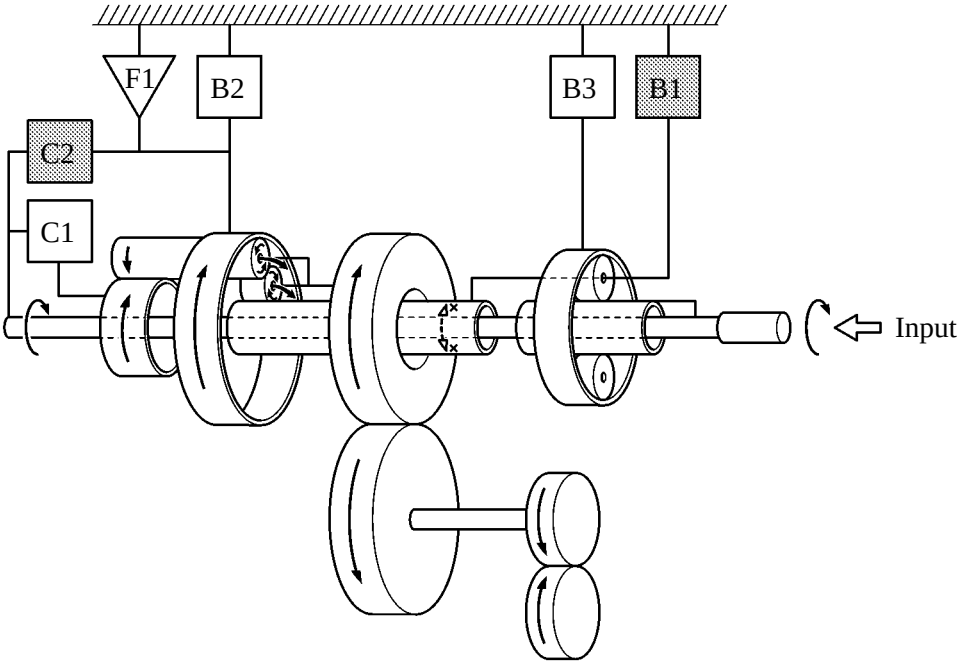

01YCH14Y

Reverse Gear (R Range Position)

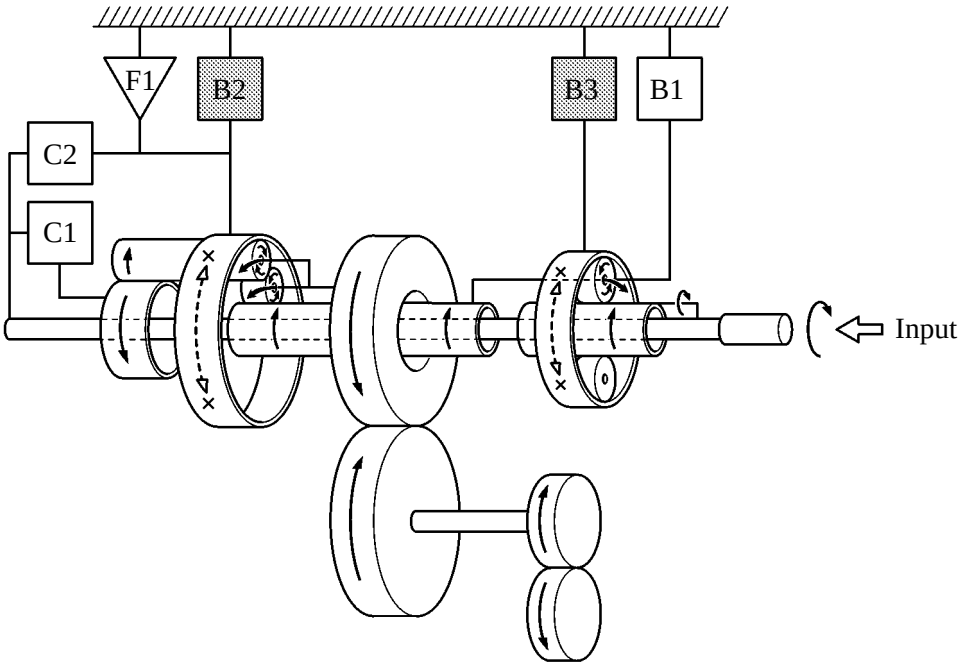

01YCH15Y

4. Centrifugal Fluid Pressure Canceling Mechanism

There are two reasons for improving the conventional clutch mechanism:

▶ To prevent the generation of pressure by the centrifugal force that is applied to the fluid in piston fluid pressure chamber (hereafter referred to as “chamber A”) when the clutch is released, a check ball is provided to discharge the fluid. Therefore, before the clutch could be subsequently applied, it took time for the fluid to fill the chamber A.

▶ During shifting, in addition to the original clutch pressure that is controlled by the valve body, the pressure that acts on the fluid in chamber A also exerts influence, which is dependent upon revolution fluctuations.

To address these two needs for improvement, a canceling fluid pressure chamber (hereafter referred to as “chamber B”) has been provided opposite chamber A.

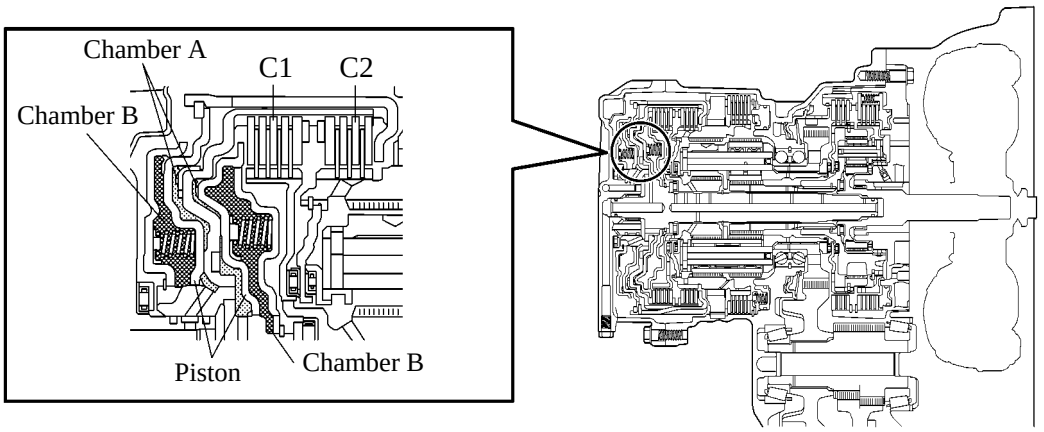

025CH27Y

By utilizing lubrication fluid such as that of the shaft, an equal centrifugal force is applied, thus canceling the centrifugal force that is applied to the piston itself. Accordingly, it is not necessary to discharge the fluid through the use of a check ball, and a highly responsive and smooth shifting characteristic has been achieved.

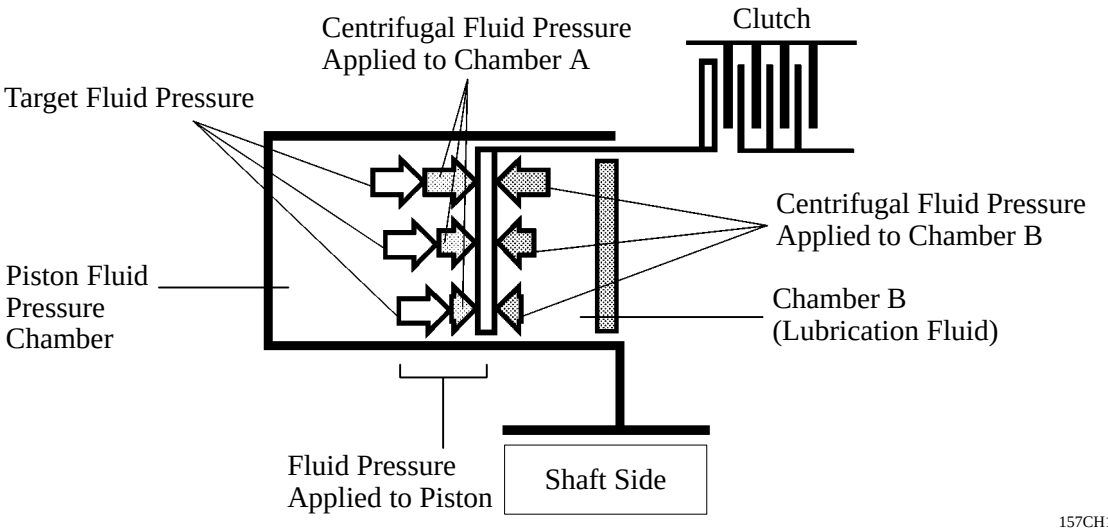

157CH17

Fluid pressure applied to piston	-	Centrifugal fluid pressure applied to chamber B	=	Target fluid pressure (original clutch pressure)

5. Counter Drive Gear

▶ Angular ball bearings are used to support the counter drive gear and the Ravigneaux planetary gear unit, reducing the rolling resistance and noise.

▶ By providing three elongated openings in the counter drive gear, the vibration conduction characteristic of the gear has been optimized. As a result, both gear noise and weight reductions have been achieved.

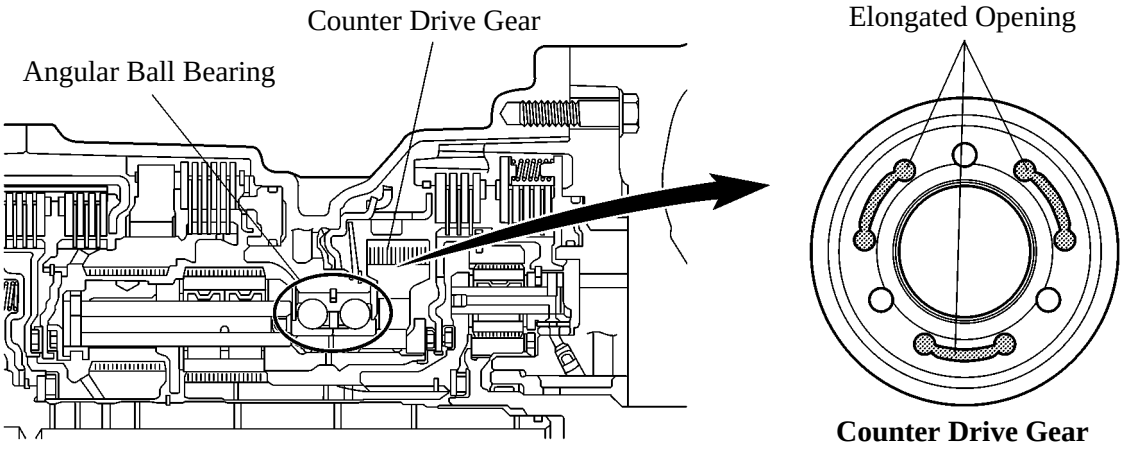

01YCH17Y

6. Clutch and Brake Pistons

▶ Two types of pistons are used; a non-split piston that acts in the push direction for the No.1 clutch (C1) operation, and a split piston that acts in the pull direction for the No.2 clutch (C2) operation. These two types of pistons contribute to making the entire clutch structure compact.

▶ When the split piston operates, clutch drag occurs due to rattling cause by the divided portion of the piston. However, by fitting springs on the piston circumference, such rattling is restrained and the occurrence of clutch drag is minimized.

▶ By setting the piston for the No.3 brake (B3) operation around the counter drive gear, the brake structure has been made more compact.

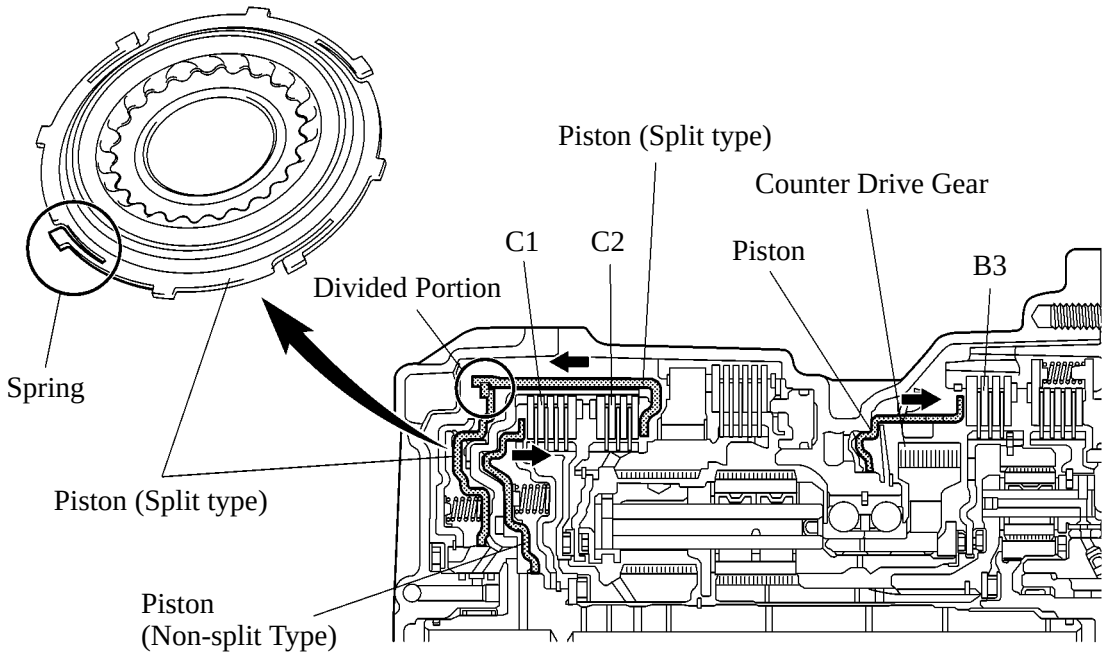

01YCH18Y

▪ VALVE BODY UNIT

1. General

The valve body unit consists of the No.1 upper, No.2 upper and lower valve bodies and 7 solenoid valves (SL1, SL2, SL3, SL4, SLU, SLT, SL).

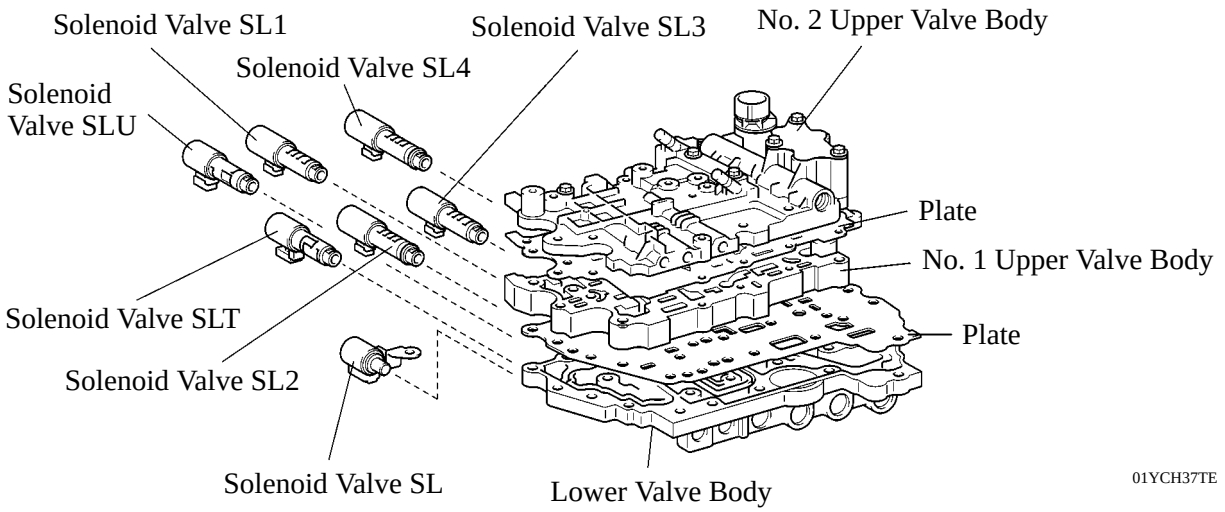

▶ No.1 Upper Valve Body ●

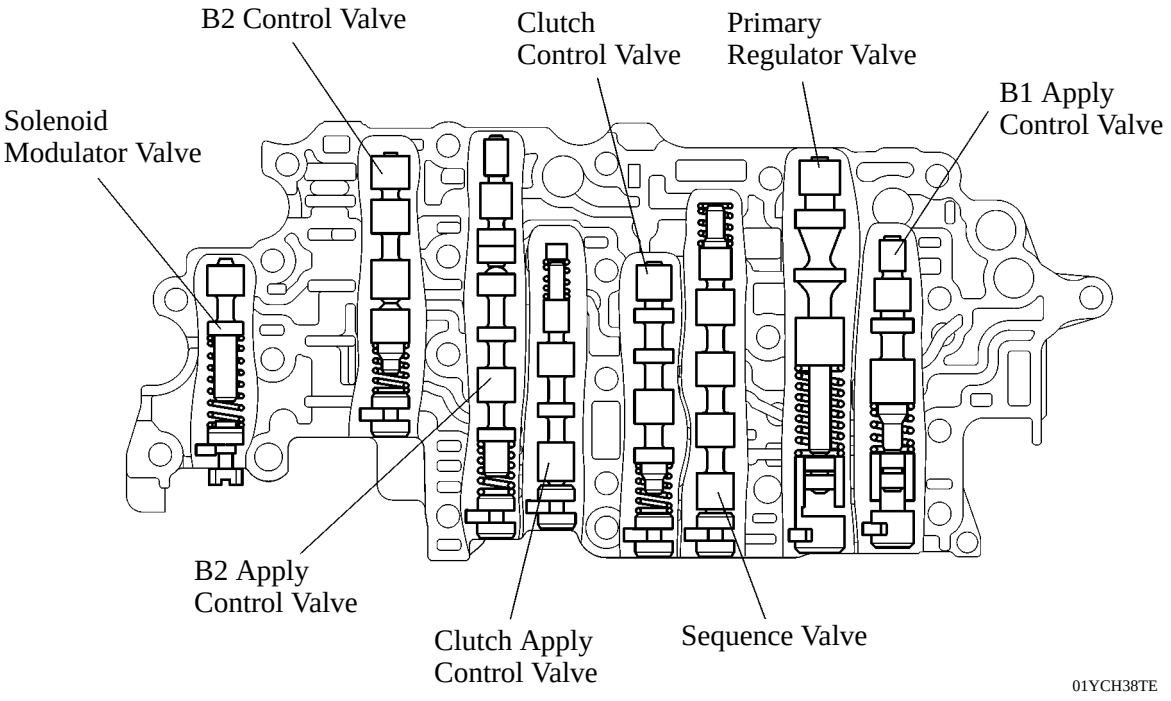

▶ No.2 Upper Valve Body ●

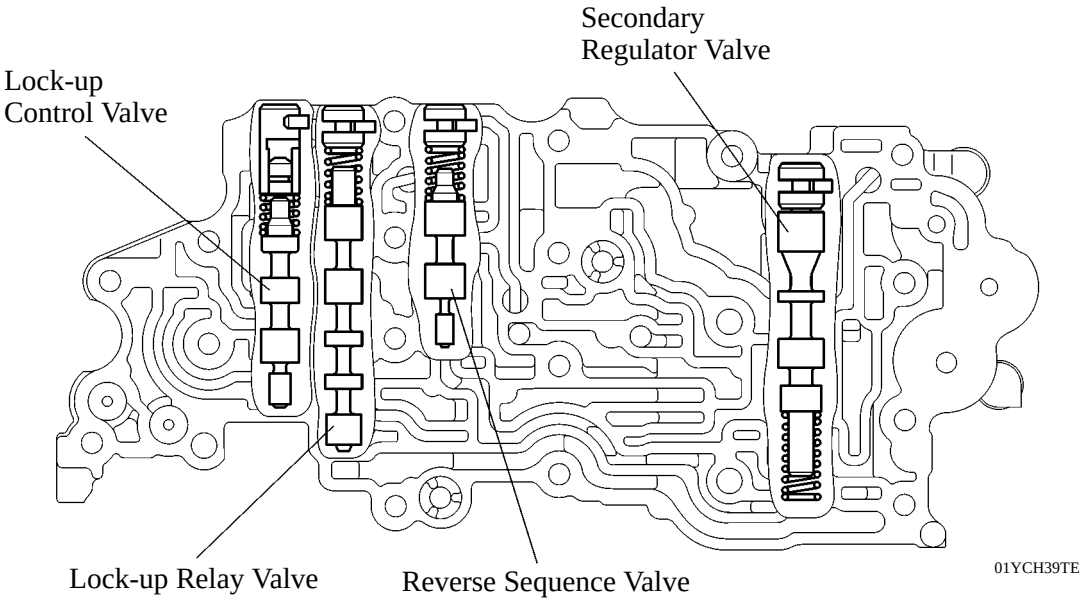

▶ Lower Valve Body ●

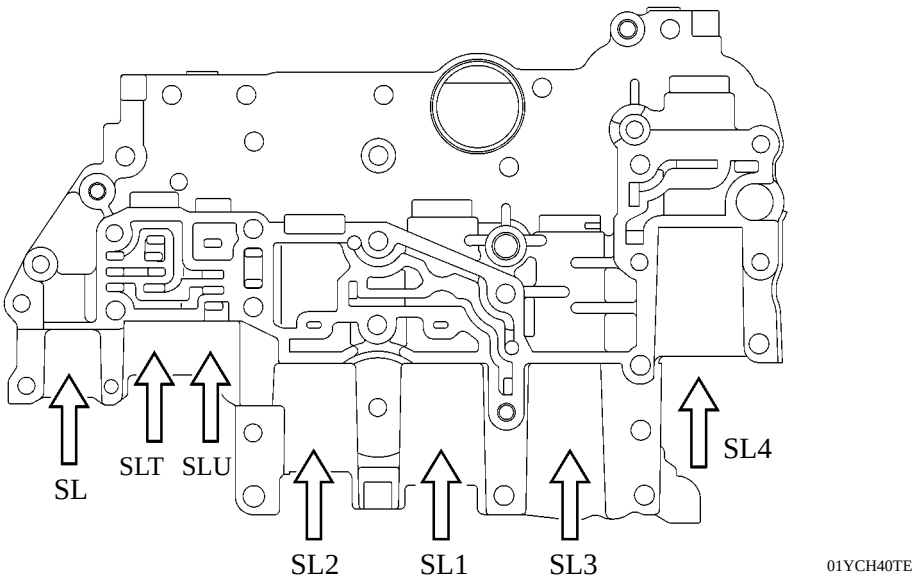

2. Solenoid Valves

Solenoid Valves SL1, SL2, SL3, SL4, SLU and SLT

In order to provide a hydraulic pressure that is proportional to the current that flows to the solenoid coil, solenoid valves SL1, SL2, SL3, SL4, SLU and SLT linearly control the line pressure and clutch and brake engagement pressure based on the signals from the ECT ECU.

Solenoid valves SL1, SL2, SL3 and SL4 are large flow linear solenoid valves that can supply more pressure than conventional ones. These solenoid valves control engagement elements by directly regulating the line pressure without using the pressure regulation valve (control valve) or the pressure reduction valve (solenoid modulator valve). Thus, the number of valves and the length of the valve body fluid passage have been reduced, the shifting response has been increased and the shift shock has been minimized.

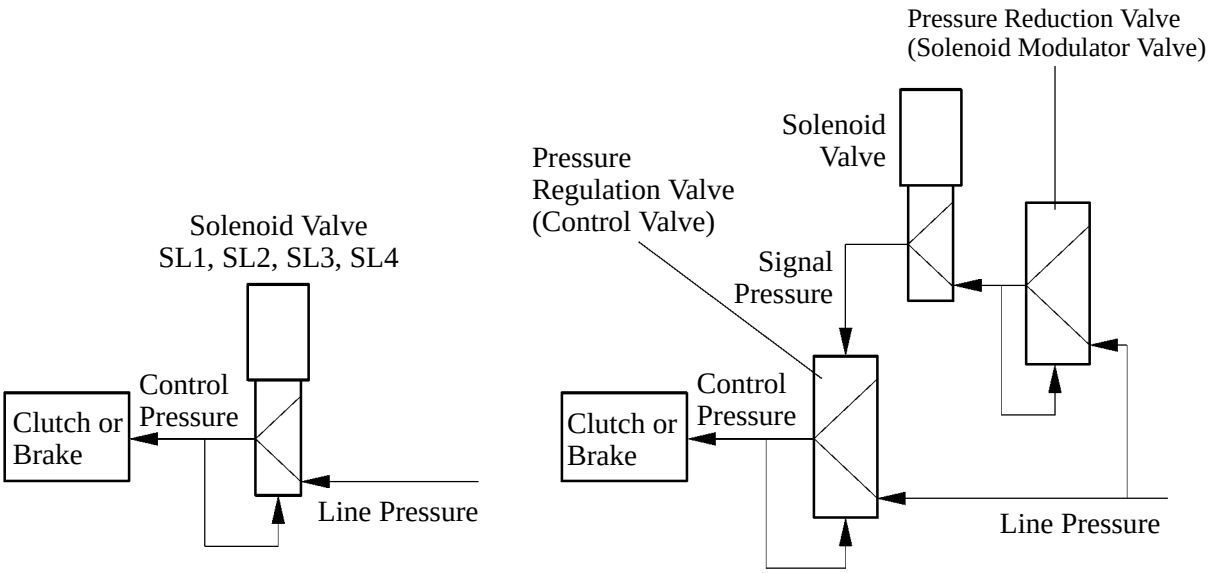

U660E **U151E**

01YCH41TE

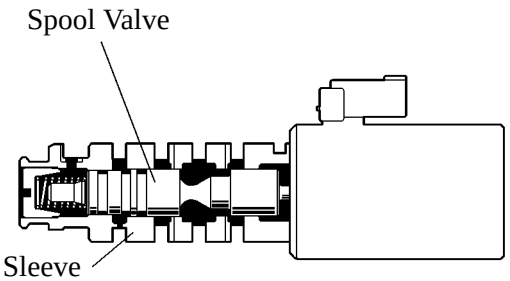

Solenoid Valve SL2 and SL4

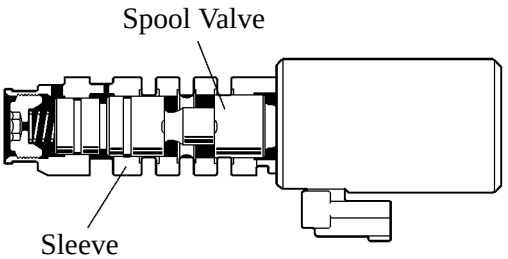

Solenoid Valve SL1 and SL3

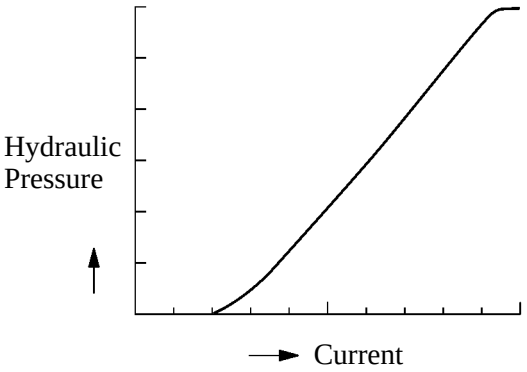

01YCH19Y

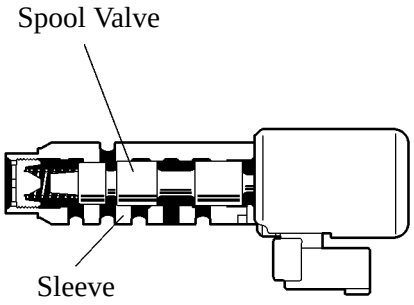

Solenoid Valve SLU

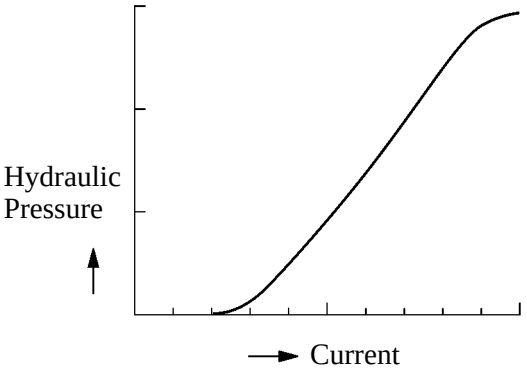

01YCH20Y

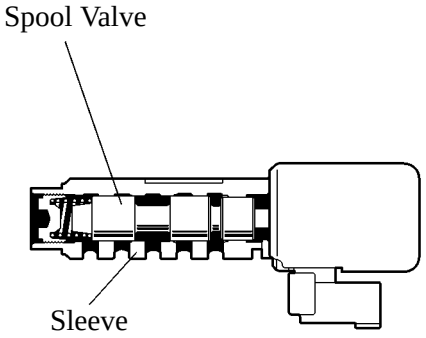

Solenoid Valve SLT

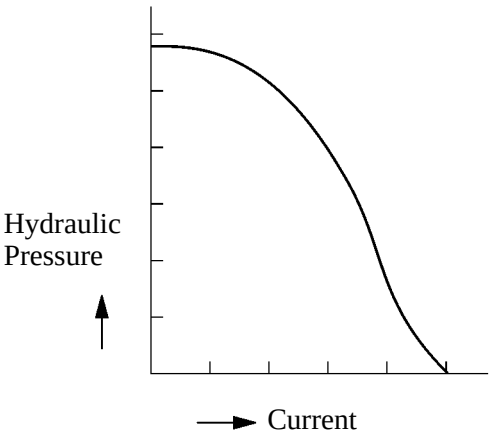

01YCH21Y

▶ Function of Solenoid Valves ●

Solenoid Valve	Function
SL1	C1 clutch pressure control
SL2	C2 clutch pressure control
SL3	B1 brake pressure control
SL4	B3 brake pressure control
SLU	Lock-up clutch pressure control B2 brake pressure control
SLT	Line pressure control

Solenoid Valve SL

Solenoid valve SL uses a three-way solenoid valve.

A filter is provided at the tip of the solenoid valve to further improve operational reliability.

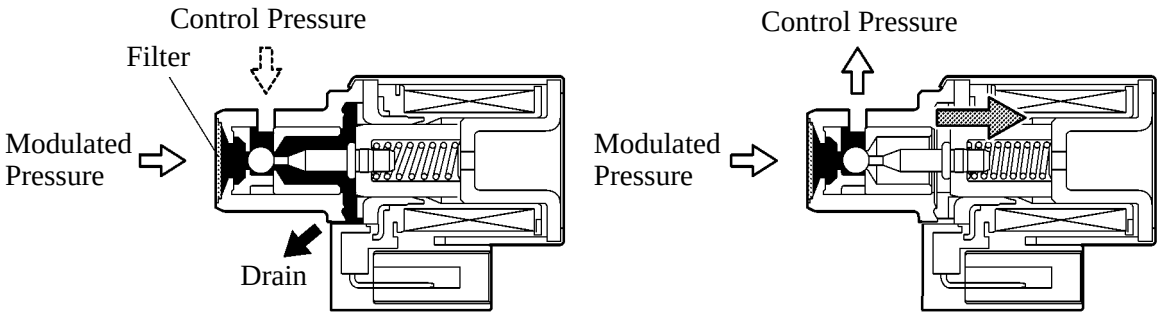

OFF Condition **ON Condition**

01YCH22Y

▶ **Function of Solenoid Valve ●**

Solenoid Valve	Type	Function
SL	3-way	Switches the lock-up relay valve. Switches the B2 apply control valve and the reverse sequence valve.

▪ ELECTRONIC CONTROL SYSTEM

1. General

The electronic control system of the U660E automatic transaxle consists of the control listed below.

System	Outline
Shift Timing Control	The ECT ECU supplies current to 6 solenoid valves (SL1, SL2, SL3, SL4, SL and/or SLU) based on signals from each sensor to shift the gear.
Clutch to Clutch Pressure Control (See page CH-65)	Controls the pressure that is applied directly to the C1, C2 clutches and B1, B3 brakes by actuating the shift solenoid valves (SL1, SL2, SL3 and SL4) in accordance with ECT ECU signals.
Line Pressure Optimal Control (See page CH-66)	Actuates solenoid valve SLT to control the line pressure in accordance with information from the ECT ECU and the operating conditions of the transaxle.
Powertrain Cooperative Control (See page CH-67)	Controls both the shift control and engine output control in an integrated way, achieving excellent shift characteristics and drivability.
Lock-up Timing Control (See page CH-68)	The ECT ECU supplies current to shift solenoid valves SL and SLU based on signals from each sensor and engages or disengages the lock-up clutch.
Flex Lock-up Clutch Control (See page CH-69)	Controls solenoid valves SLU and SL, provides an intermediate mode between the ON/OFF operation of the lock-up clutch, and increases the operating range of the lock-up clutch to improve fuel economy.
Coast Downshift Control (See page CH-70)	The ECT ECU performs downshift control so that fuel cut control can continue for as long as possible during deceleration.
AI (Artificial Intelligence) -SHIFT (See page CH-71)	Based on the signals from various sensors, the ECT ECU determines the road condition and the intention of the driver. Thus, the shift pattern is automatically regulated to an optimal level, improving drivability.
Multi-Mode Automatic Transmission (See page CH-73)	The ECT ECU appropriately controls the automatic transaxle in accordance with the range position selected while the shift lever is in the S mode position.
Diagnosis (See page CH-75)	When the ECT ECU detects a malfunction, the ECT ECU makes a diagnosis and memorizes the malfunctioning part.
Fail-safe (See page CH-75)	Even if a malfunction is detected in the sensors or solenoids, the ECT ECU activates fail-safe control to prevent the vehicle's drivability from being significantly affected.

2. Construction

The configuration of the electronic control system in the U660E automatic transaxle is as shown in the following chart.

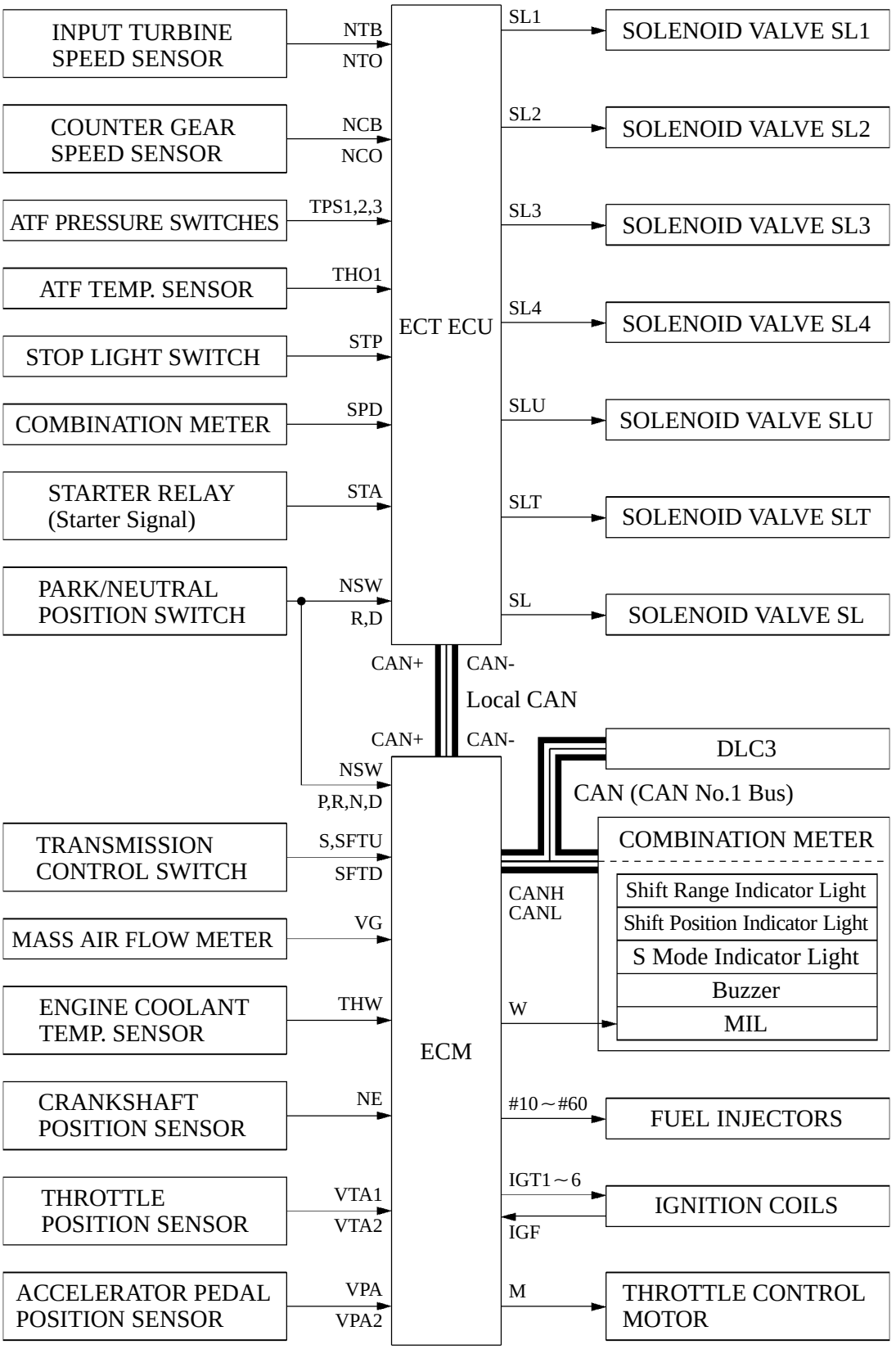

01YCH23Y

3. Layout of Main Components

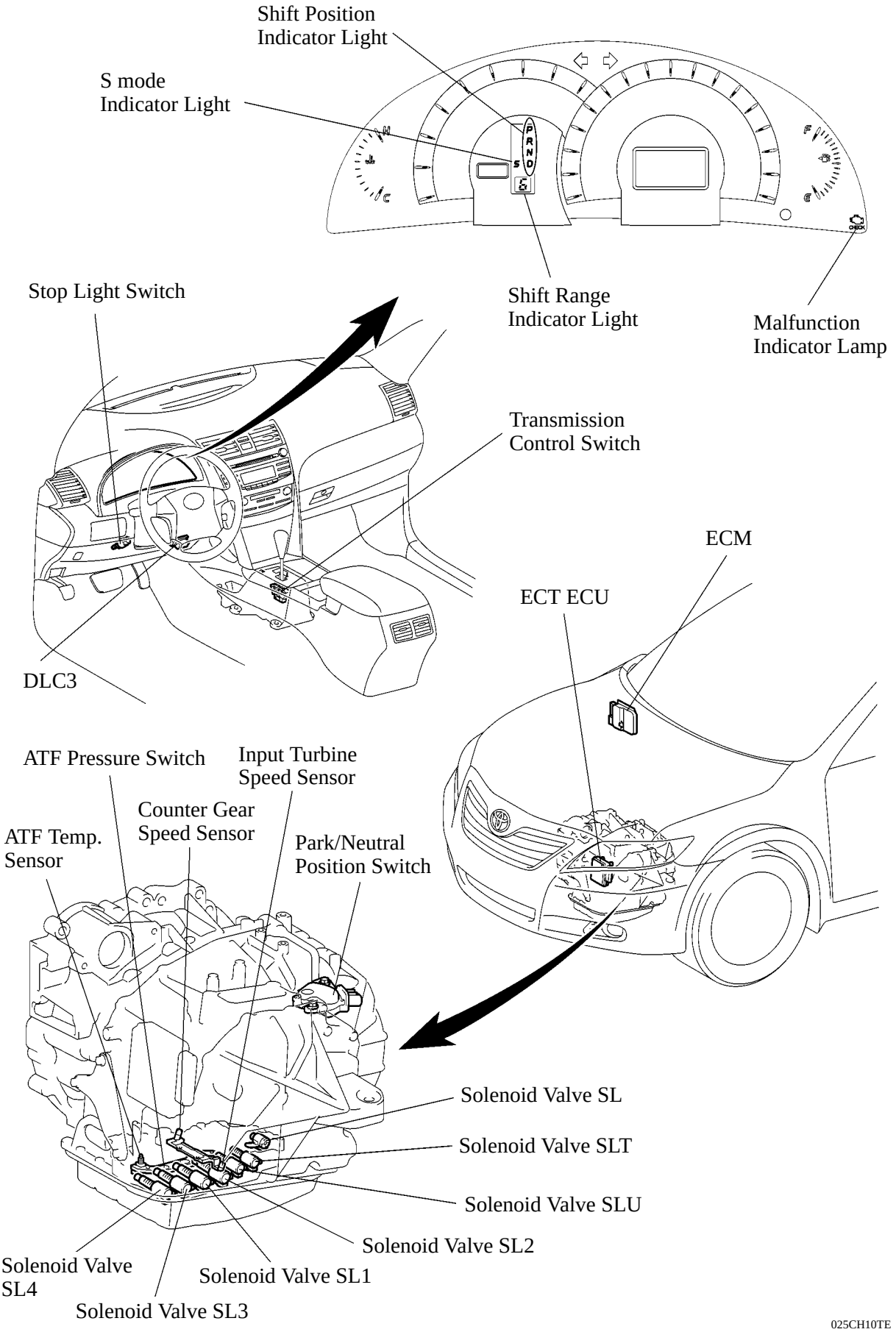

4. Construction and Operation of Main Components

ECT ECU

The ECT ECU has been isolated from the ECM and directly fitted to the transaxle. Thus, the wiring harness has been shortened allowing the weight to be reduced. All the solenoid valves and sensors used for automatic transaxle control are directly connected to the ECT ECU through the connector located in front of the automatic transaxle.

The ECT ECU maintains communication with the ECM through the CAN (Controller Area Network). Thus, engine control is effected in coordination with ECT control.

A label, on which the automatic transaxle compensation values and QR (Quick Response) code are printed, is attached on the top of the automatic transaxle. The label contains encoded automatic transaxle property information. When the automatic transaxle is replaced, allow the ECT ECU to learn the automatic transaxle property information by inputting the automatic transaxle compensation values into the ECT ECU using a hand-held tester. In this way, the shift control performance immediately after replacement of the automatic transaxle is improved. For details, see the 2007 Camry Repair Manual (Pub. No. RM0250U).

The QR code, which requires a special scan tool, is used at the vehicle assembly plant.

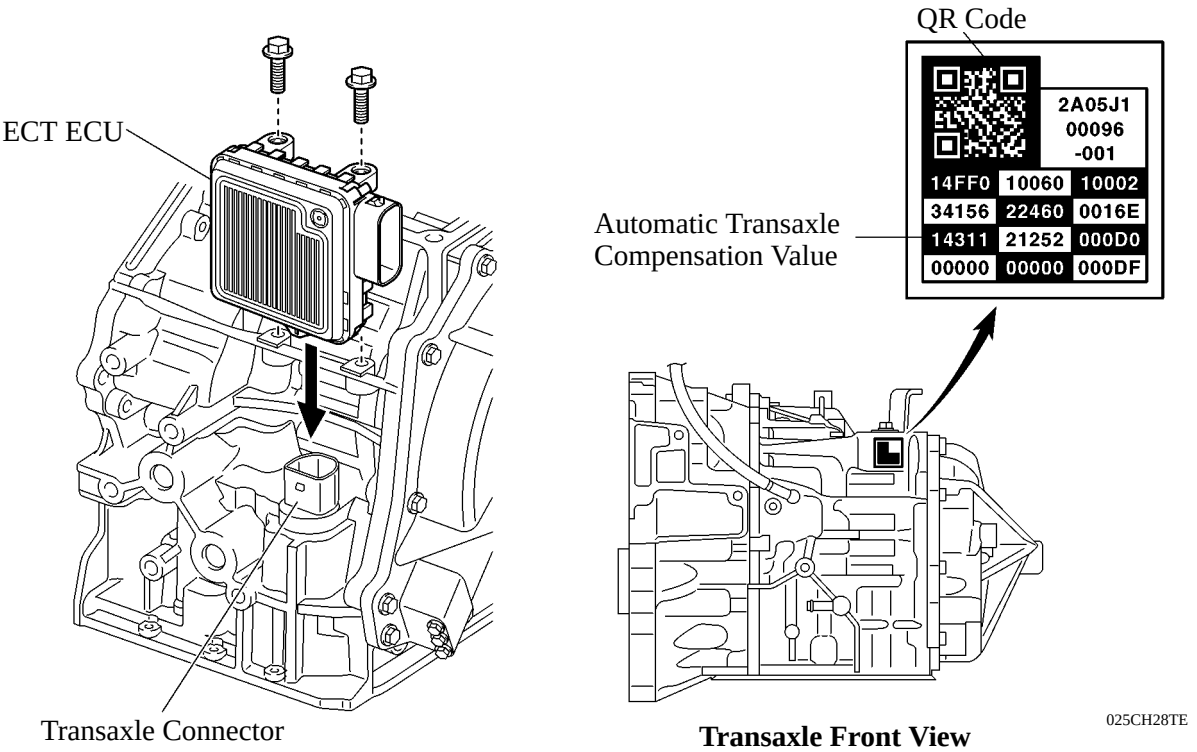

Transaxle Front View

— REFERENCE —

What are QR (Quick Response) Codes?

QR code, a matrix symbology consisting of an array of nominally square cells, allows omni-directional, high-speed reading of large amounts of data.

QR codes encode many types of data such as numeric, alphanumeric, kanji, kana and binary codes. A maximum of 7,089 characters (numeric) can be encoded.

QR codes (2D code) contain information in the vertical and horizontal directions, whereas bar codes only contain data in one direction. QR codes (2D code) hold considerably greater volumes of information than bar codes.

ATF Temperature Sensor

The ATF temperature sensor is installed in the valve body for direct detection of the fluid temperature.

The ATF temperature sensor is used for the revision of clutch and brake pressures to maintain a smooth shift quality every time.

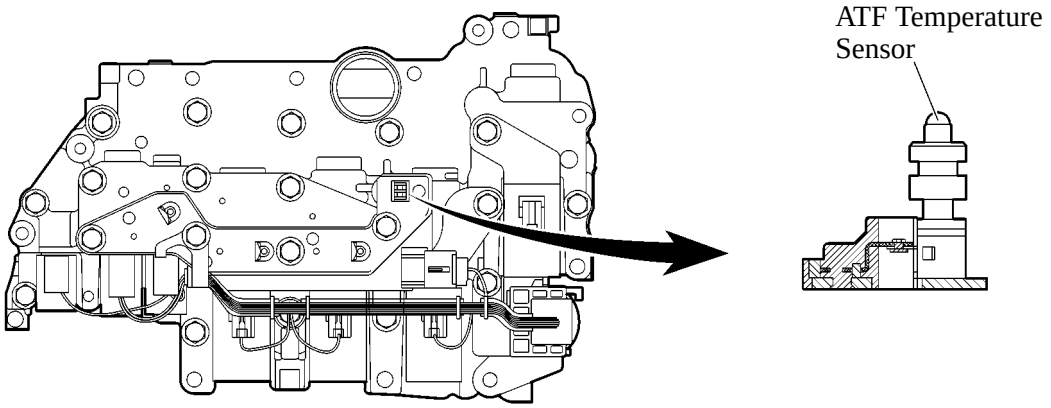

Lower Valve Body

01YCH44TE

ATF Pressure Switch

The ATF pressure switches are located in the output fluid passages of SL1, SL2 and SLU, and turn ON/OFF in accordance with the solenoid valve output fluid pressure.

The ECT ECU detects malfunctions in solenoid valves SLU and SL used in lock-up control in accordance with the ON/OFF signals from ATF pressure switch 3 located in the SLU output fluid passage.

When any of SL1 to SL4 malfunctions, the ECT ECU determines the appropriate fail-safe operation to be actuated in accordance with the ON/OFF signals from ATF pressure switches 1 and 2 located in the SL1 and SL2 output fluid passages.

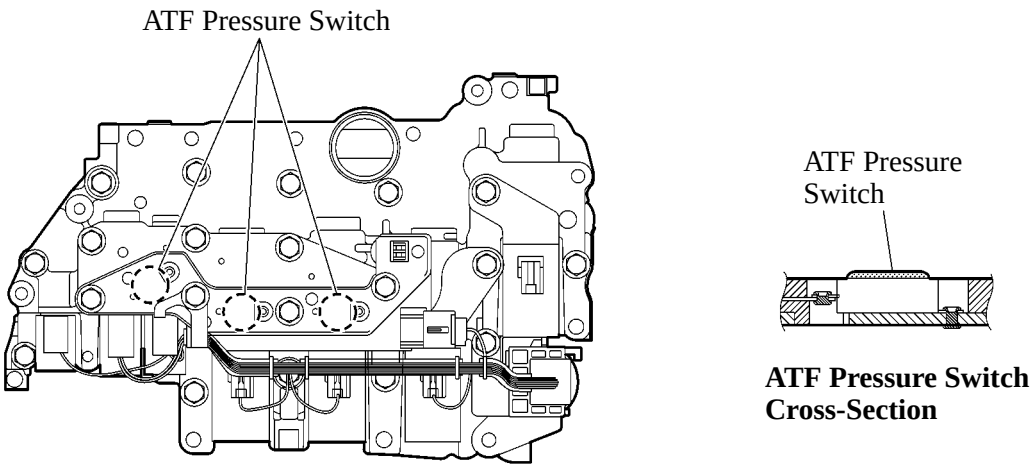

ATF Pressure Switch Cross-Section

Lower Valve Body

01YCH45TE

Speed Sensors

The U660E automatic transaxle uses an input turbine speed sensor (for the NT signal) and a counter gear speed sensor (for the NC signal). Thus, the ECT ECU can detect the timing of the shifting of the gears and appropriately control the engine torque and hydraulic pressure in response to the various conditions. These speed sensors are the Hall type.

The input turbine speed sensor detects the input speed of the transaxle. The No.2 clutch piston is used as the timing rotor for this sensor.

The counter gear speed sensor detects the speed of the counter gear. The counter drive gear is used as the timing rotor for this sensor.

The Hall type speed sensor consists of a magnet and Hall IC. The Hall IC converts the changes in the magnetic flux density that occur through the rotation of the timing rotor into electric signal, and outputs the signal to the ECT ECU.

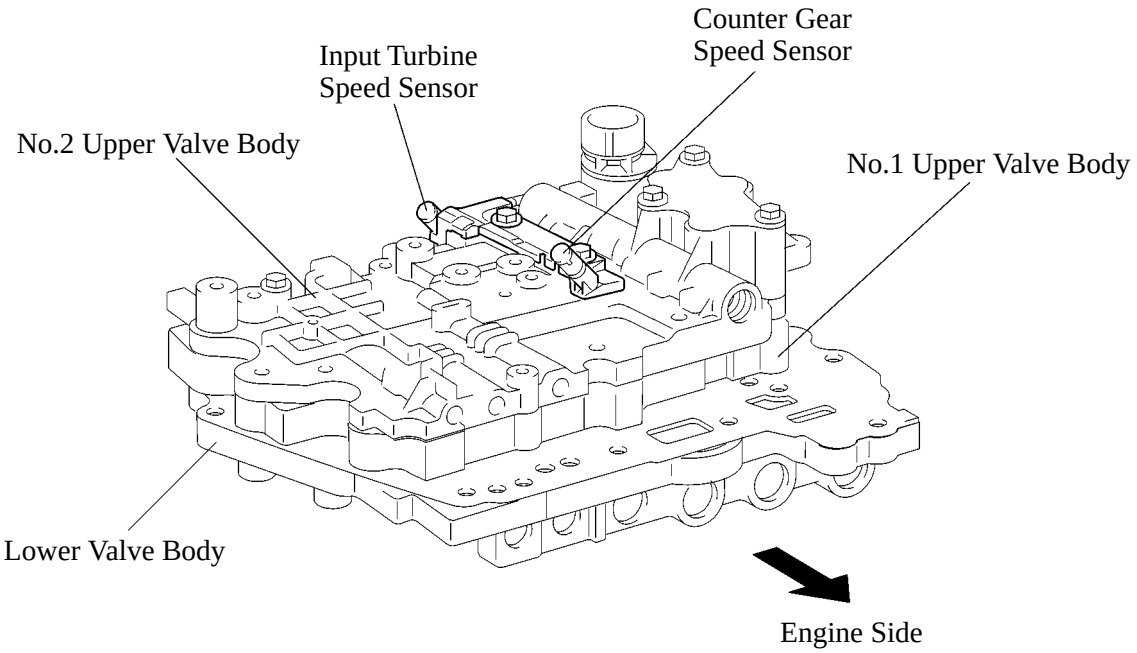

01YCH24TE

Transmission Control Switch and Park/Neutral Position Switch

The ECT ECU and ECM use these switches to detect the shift lever position.

The park/neutral position switch sends the P, R, N and D position signals to both the ECM and ECT ECU. The ECM transmits signals to the combination meter for the shift position indicator light (P, R, N and D) in response to the signal it receives from the switch.

The transmission control switch is installed inside the shift lever assembly. Switch terminal S is used to detect whether the shift lever is in the D position or S mode position, and terminals SFTU and SFTD are used to detect the operating conditions of the shift lever (front [+ position] or rear [- position]) if S mode is selected. By transmitting signals to the ECM, the transmission control switch turns on both the shift range indicator light and S mode indicator light when the shift lever is moved to the S mode position, and indicates the selected range position through shift range indicator light.

▶ **Wiring Diagram ●**

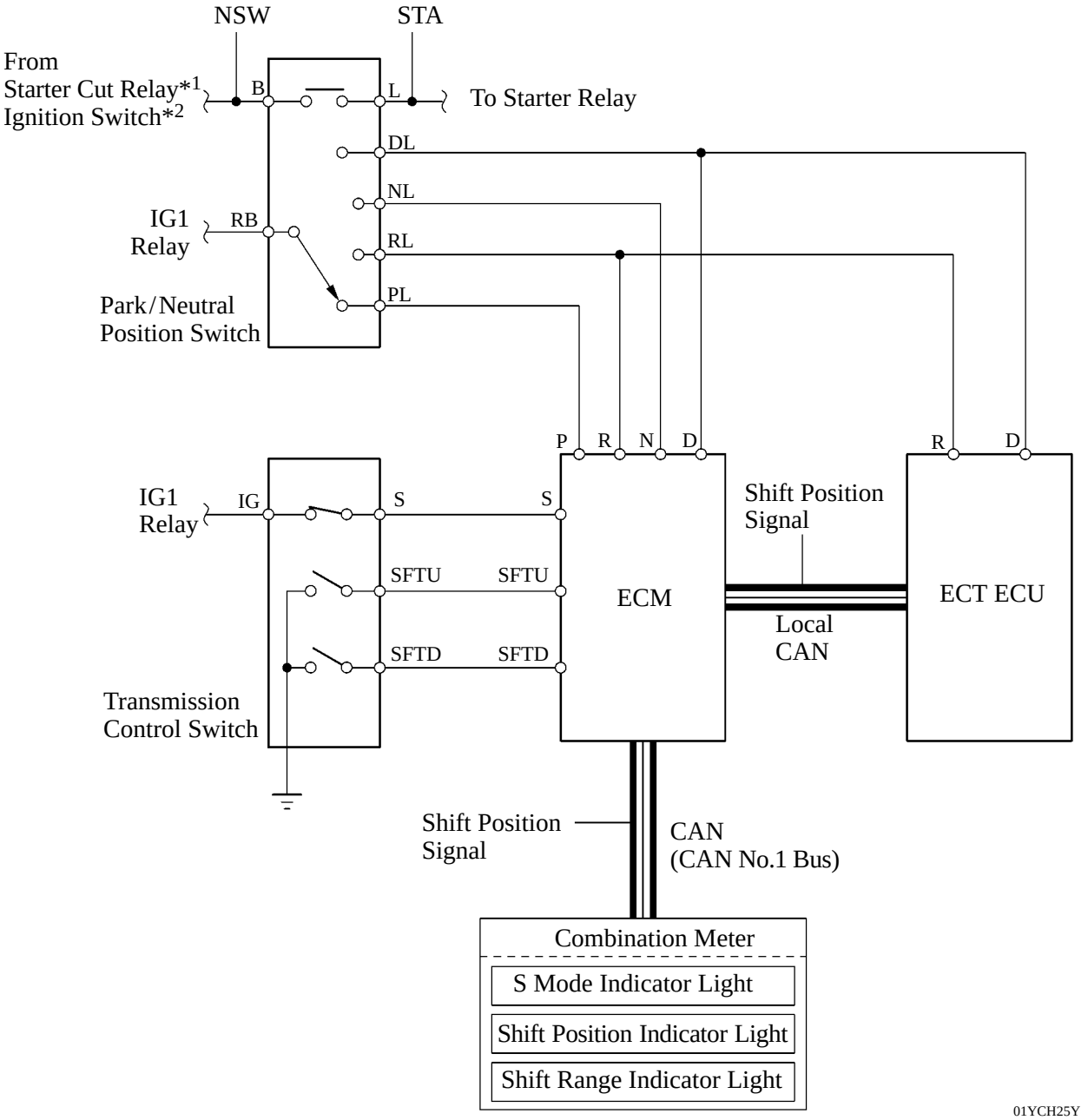

*1: Models with smart key system

*2: Models without smart key system

5. Clutch to Clutch Pressure Control

Clutch to clutch pressure control is used for shift control. As a result, shift control in the 2nd gear or above is possible without using the one-way clutch, and the automatic transaxle has been made lightweight and compact.

Using the fluid pressure circuit, which enables the clutches and brakes (C1, C2, B1 and B3) to be controlled independently, and the high flow SL1, SL2, SL3 and SL4 linear solenoid valves, which directly control the line pressure, the ECT ECU controls each clutch and brake accordingly with the optimum fluid pressures and timings in accordance with the information transmitted by the sensors, and then shifts the gears. As a result, highly responsive and excellent shift characteristics have been realized.

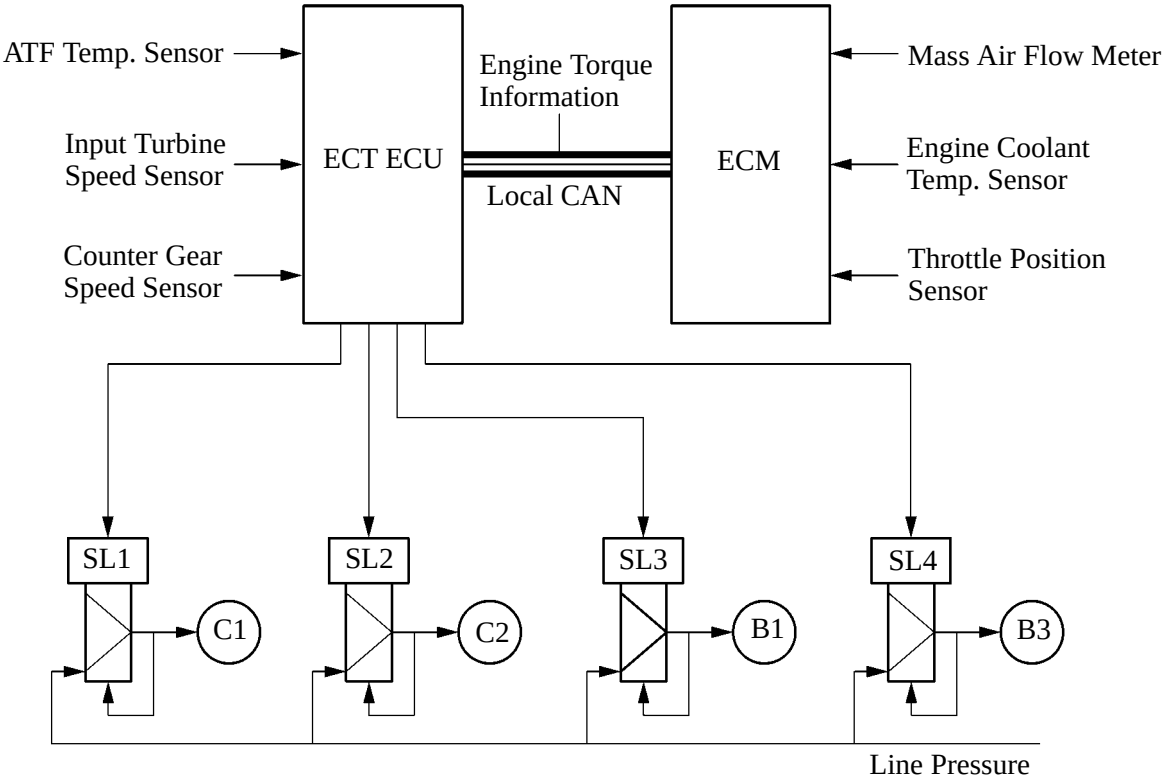

01YCH26TE

6. Line Pressure Optimal Control

The line pressure is controlled by using solenoid valve SLT. Through the use of solenoid valve SLT, the line pressure is optimally controlled in accordance with the engine torque information, as well as with the internal operating conditions of the torque converter and the transaxle. Accordingly, the line pressure can be accurately controlled in accordance with the engine output, traveling condition, and the ATF temperature, thus realizing smooth shift characteristics and optimizing the workload of the oil pump.

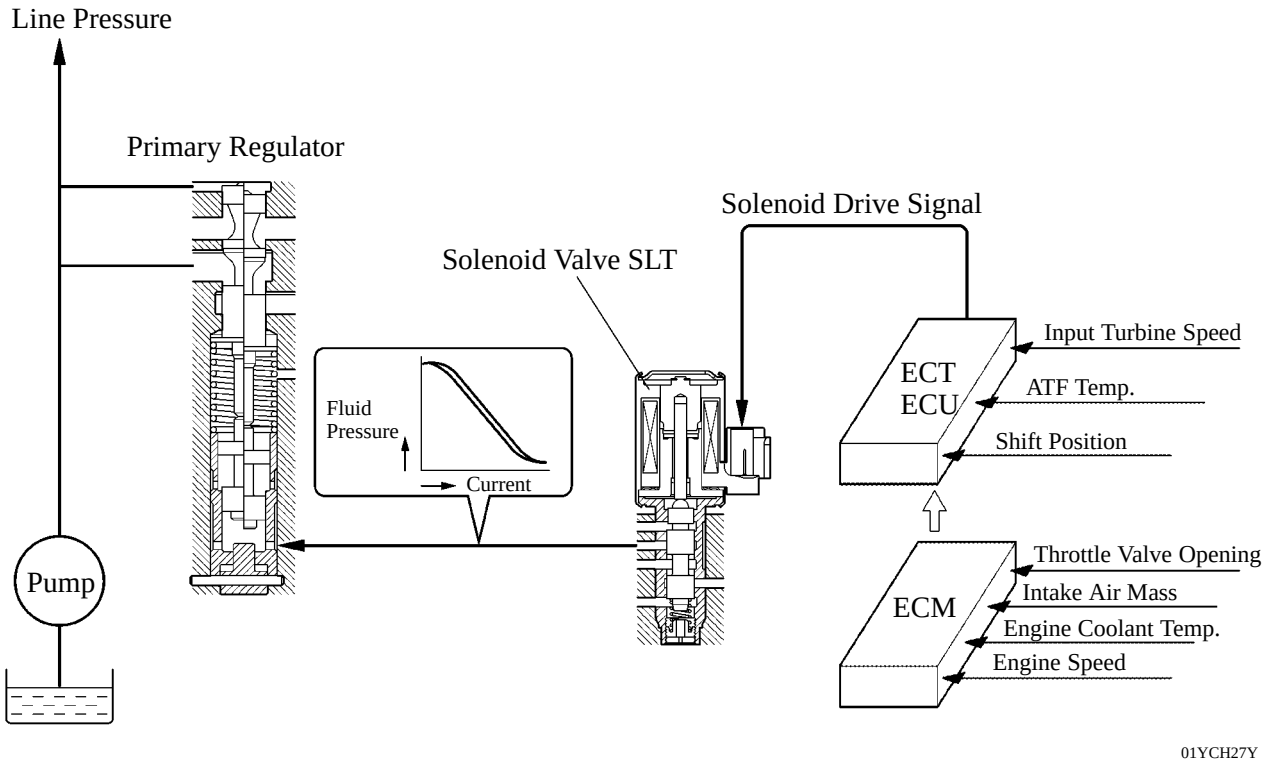

*: This diagram illustrates the fundamentals of Line Pressure Control. The valve shapes differ from the actual ones.

7. Powertrain Cooperative Control

Throttle Control at Launch

By controlling the engine output in cooperative control with ETCS-i (Electronic Throttle Control System-intelligent) when the vehicle is launched, excellent launch performance (improved response and suppression of tire slippage) is ensured.

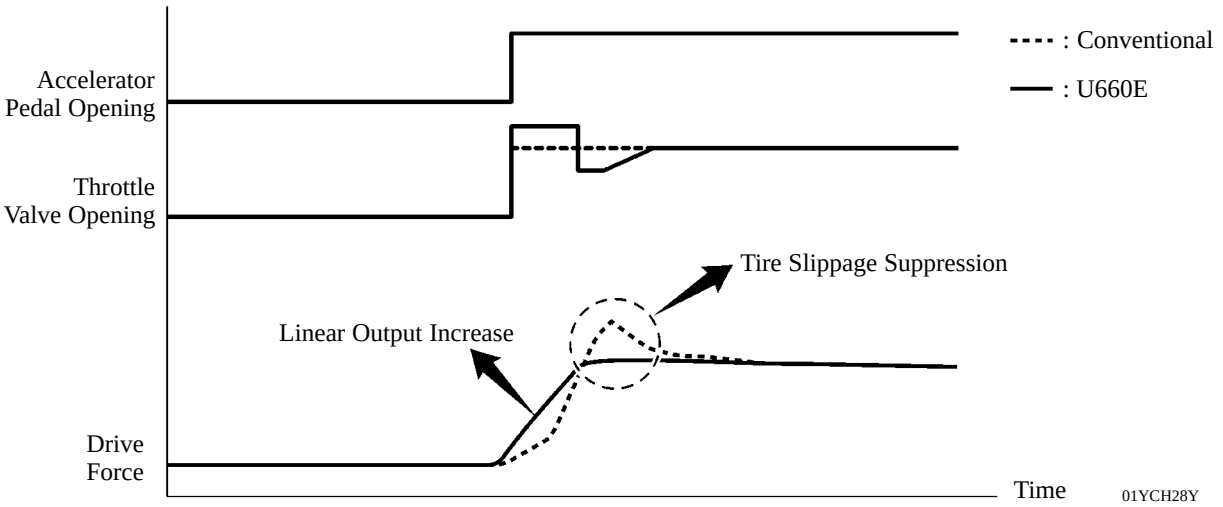

Deceleration Force Control

The ECT ECU determines the gear position when the accelerator pedal is OFF (released completely) in accordance with the operation of the accelerator pedal (released suddenly or slowly) during deceleration. In this way, preventing unnecessary upshifts and downshifts when the accelerator pedal is OFF and ensuring smooth acceleration when the vehicle needs to accelerate again.

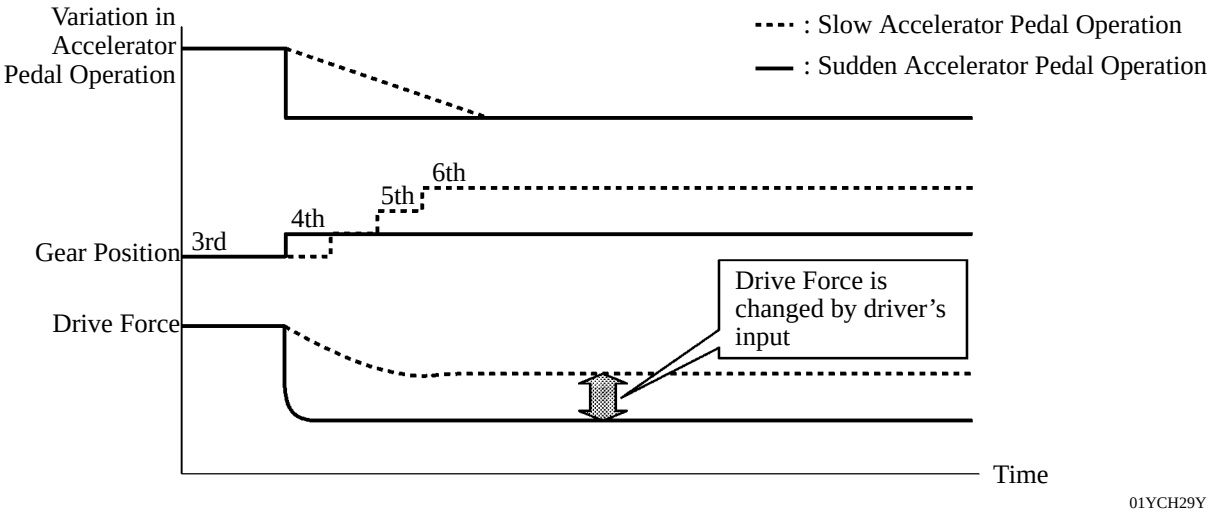

Transient Shifting Control

Through cooperative control with ETCS-i (Electronic Throttle Control System-intelligent) and ESA (Electronic Spark Advance), and electronic control of the engagement and release speed of the clutch and brake hydraulic pressures, excellent response and shift shock reduction have been achieved.

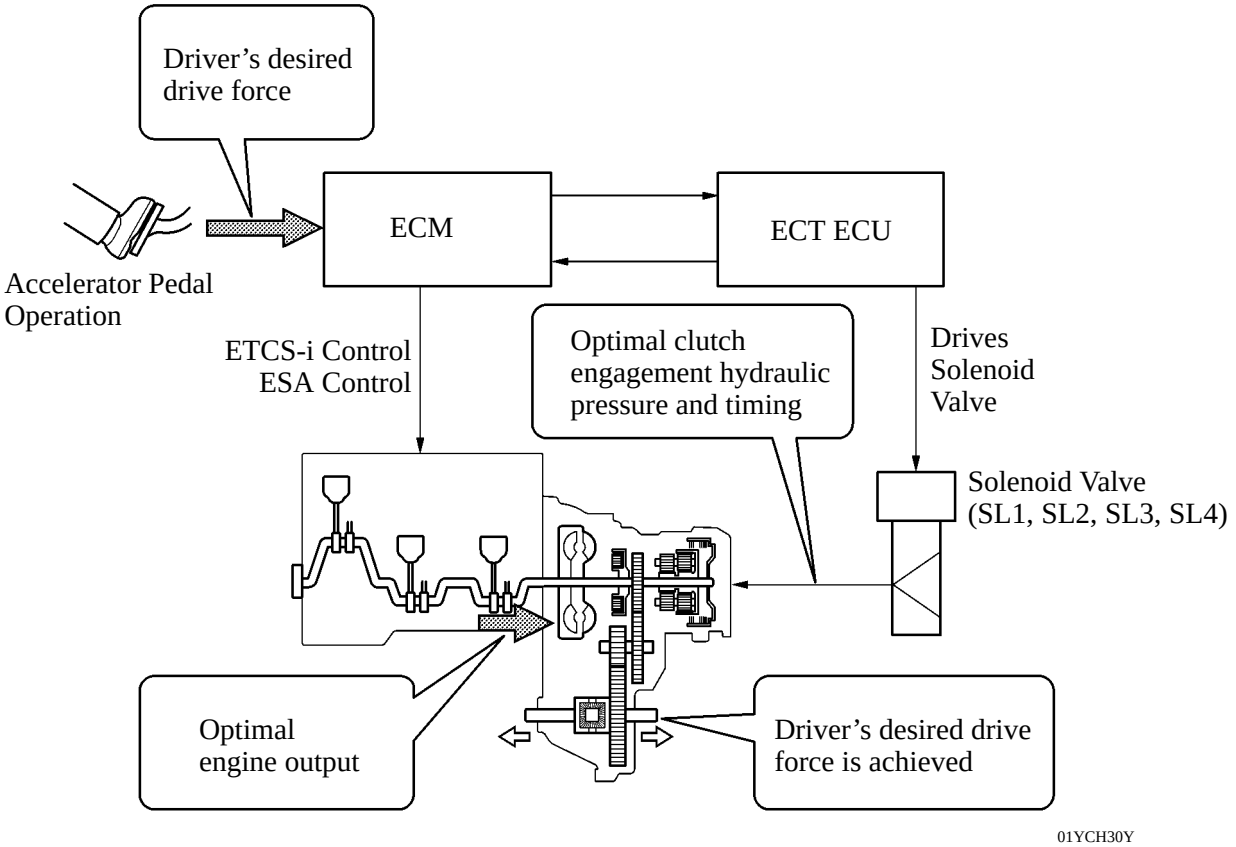

8. Lock-up Timing Control

The ECT ECU operates the lock-up timing control in order to improve the fuel consumption while in the 2nd gear or above with the shift lever in the D, S6, S5, S4 range.

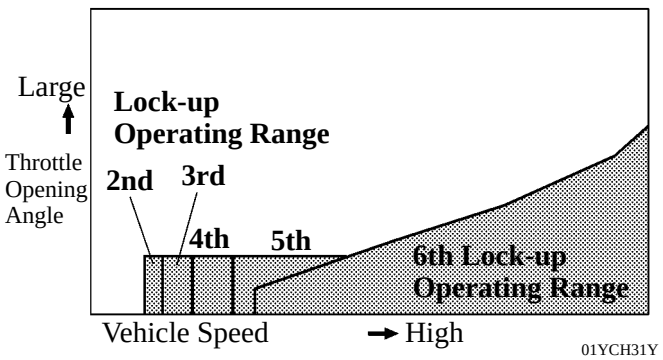

Lock-up Timing

▶ Lock-up Operation ●

Gear \ Position or Range	D or S6	S5	S4
1st	X	X	X
2nd			
3rd			
4th			
5th			—
6th		—	—

: Operates X: Does not operate —: Not applicable

9. Flex Lock-up Clutch Control

In addition to the conventional lock-up timing control, flex lock-up clutch control is used.

This flex lock-up clutch control regulates solenoid valve SLU as an intermediate mode between the ON and OFF operations of the lock-up clutch.

During acceleration, flex lock-up clutch control operates when the gear position is the 2nd or higher and the shift lever is in the D, S6, S5 or S4 range position. During deceleration, it operates when the gear position is the 4th or higher and the shift lever is in the D, S6, S5 or S4 range position.

During acceleration, the partition control of the power transmission between the lock-up clutch and torque converter greatly boosts the transmission efficiency in accordance with the driving conditions, improving the fuel economy.

During deceleration, the lock-up clutch is made to operate. Therefore the fuel-cut area is expanded and fuel economy is improved.

By allowing flex lock-up clutch control to continue operating during gearshift, the smooth torque transmission has been obtained. As a result, the fuel economy and drivability have been improved.

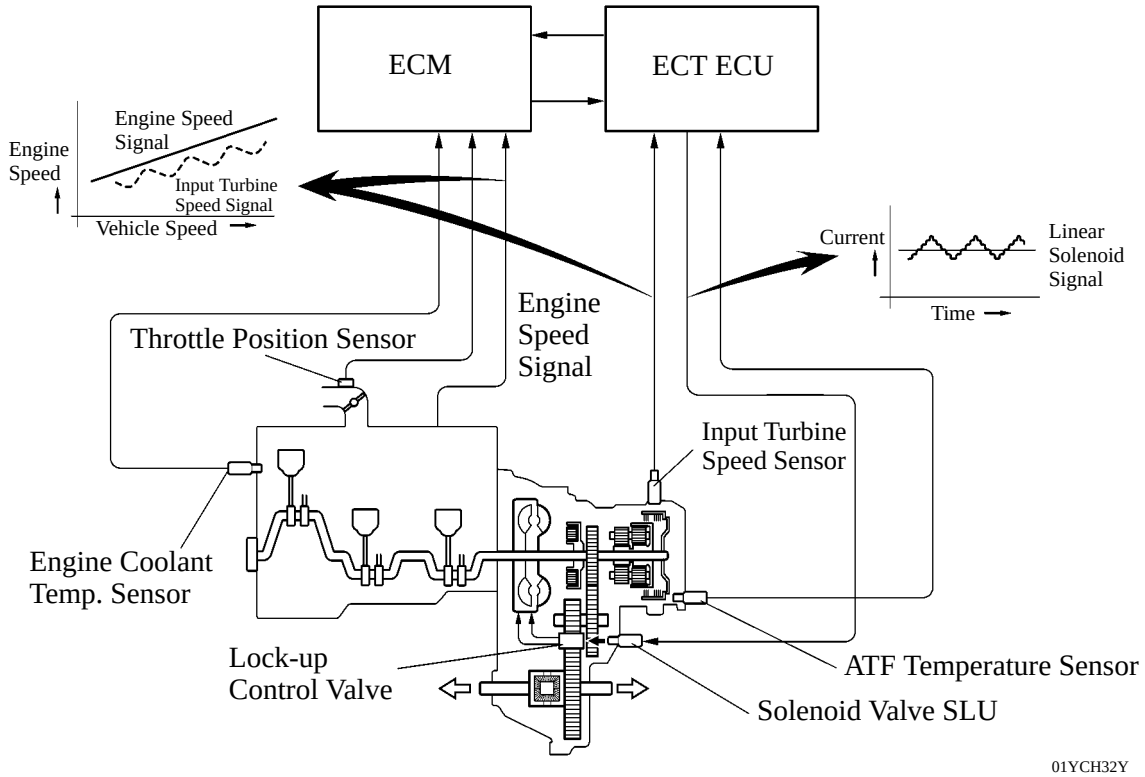

▶ Flex Lock-up Operation ●

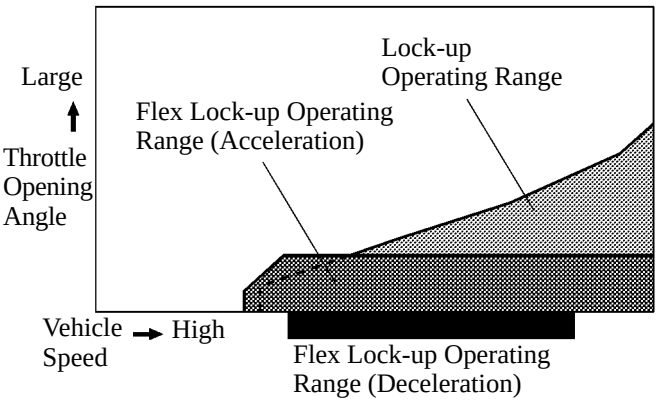

Flex Lock-Up Timing in 6th Gear

01YCH33Y

Gear \ Position or Range	D, S6	S5	S4
1st	X	X	X
2nd			
3rd			
4th	*	*	*
5th	*	*	—
6th	*	—	—

: Operates X: Does not operate —: Not applicable

*: Flex Lock-up Clutch Control also operates when the vehicle is decelerated.

10. Coast Downshift Control

The ECT ECU performs downshift control to restrain the engine speed from decreasing, and keeps fuel cut control operating for as long as possible. In this way, the fuel economy is improved.

In this control, the transaxle downshifts from 6th to 5th and then 5th to 4th before fuel cut control ends when the vehicle is decelerated in the 6th gear, so that fuel cut control continues operating.

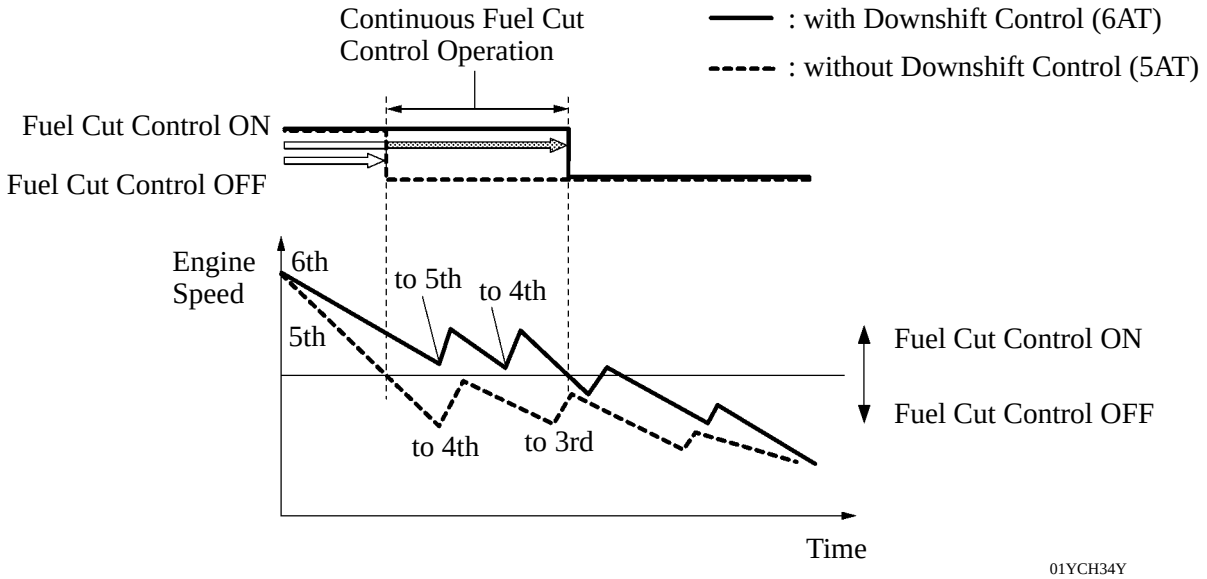

11. AI (Artificial Intelligence)-Shift Control

General

AI-SHIFT control enables the ECT ECU to estimate the road conditions and the driver's intention in order to automatically control the shift pattern in the optimal manner. As a result, a comfortable ride has been achieved.

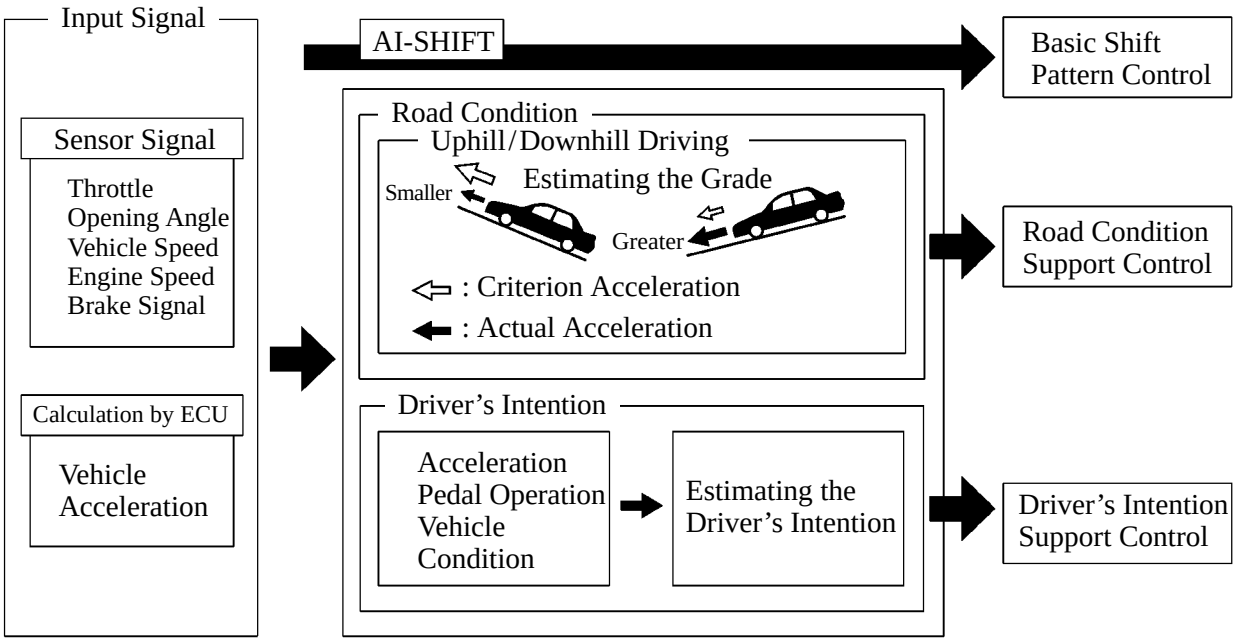

00MCH14Y

Road Condition Support Control

Under road condition support control, ECT ECU determines the throttle valve opening angle and the vehicle speed whether the vehicle is being driven uphill or downhill.
To achieve the optimal drive force while driving uphill, this control prevents the transaxle from up shifting to the 5th or 6th gear. To achieve the optimal engine brake effect while driving downhill, this control automatically downshifts the transaxle to the 5th or 4th or 3rd gear.

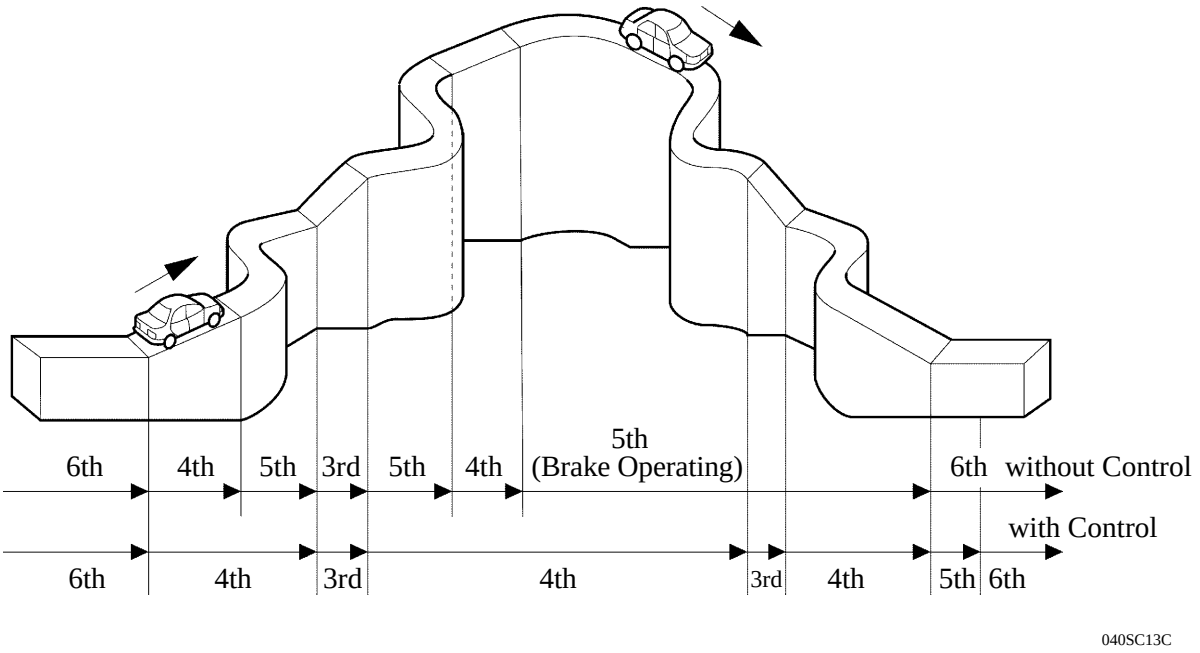

Driver's Intention Support Control

Estimates the driver's intention based on the accelerator operation and vehicle condition to switch to a shift pattern that is well-suited to each driver, without the need to operate the shift pattern select switch used in the conventional models.

12. Multi-Mode Automatic Transmission

General

By moving the shift lever to the front ("+" position) or to the rear ("-" position), the driver can select the desired shift range position. Thus, the driver is able to shift gears with a manual-like feel.

This Multi-mode automatic transmission is designed to allow the driver to switch the gear ranges; not for manually selecting single gears.

An S mode indicator light, which illuminates when the S mode position is selected and a shift range indicator light, which indicates the range position, have been provided in the combination meter.

When the vehicle is being driven at a prescribed speed or higher, any attempt to shift down the range by through the operation of the shift lever will not be executed, in order to protect the mechanism of the automatic transaxle. In this case, the ECM sounds the buzzer in the combination meter twice to alert the driver.

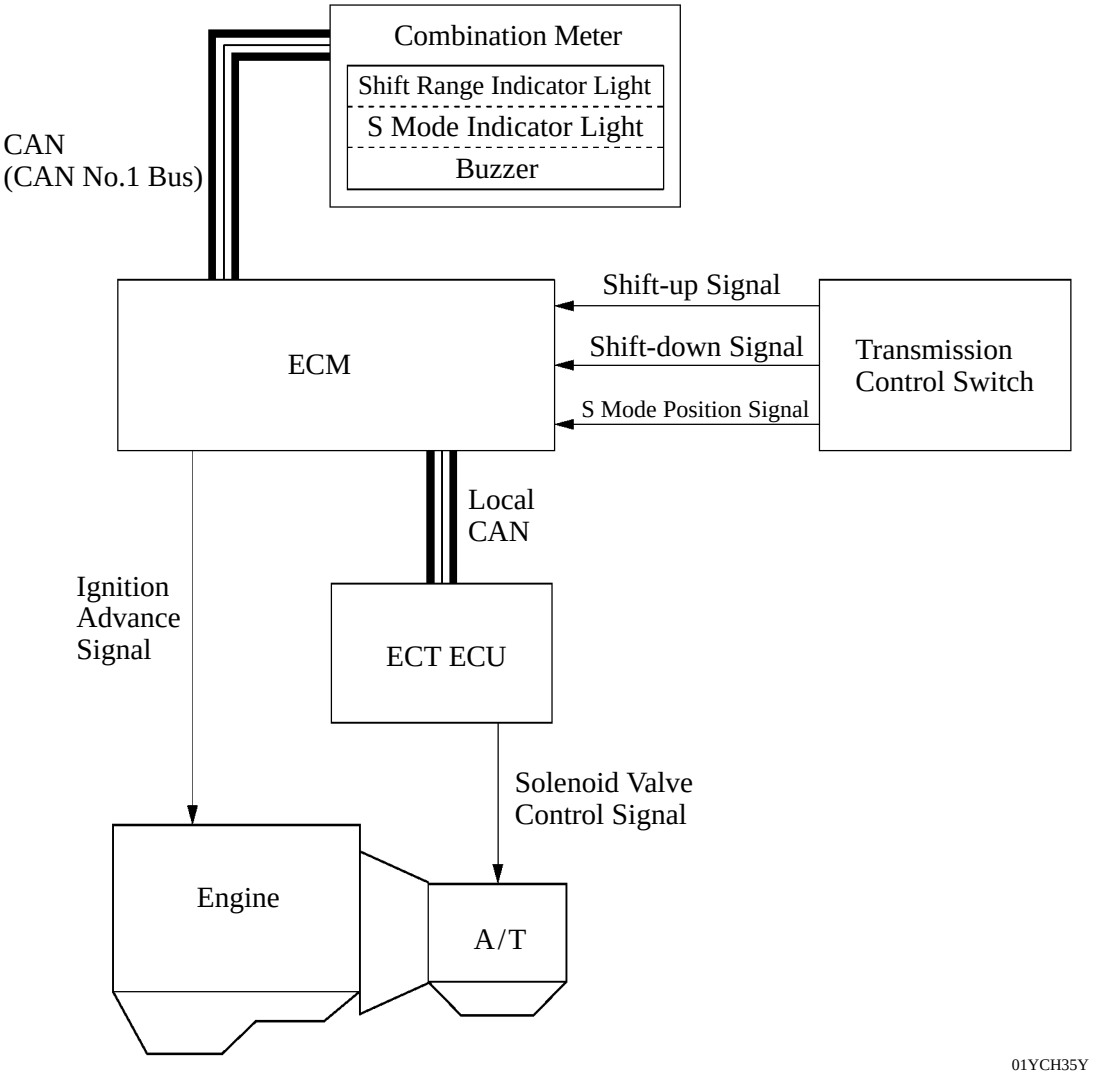

Operation

The driver selects the S mode position by engaging the shift lever. At this time, the shift range position selects the 4th or 5th range according to the vehicle speed. (During AI-Shift control, the shift range that has the currently controlled gear position as the maximum usable gear position is displayed.) Then, the shift range positions change one at a time, as the driver moves the shift lever to the front ("+" position) or to the rear ("-" position).

Under this control, the ECT ECU effects optimal shift control within the usable gear range that the driver has selected. As with an ordinary automatic transmission, it shifts to the 1st gear when the vehicle is stopped.

When the shift lever is in the S mode position, the S mode indicator light in the combination meter illuminates. The shift range indicator light indicates the state of the shift range position that the driver has selected.

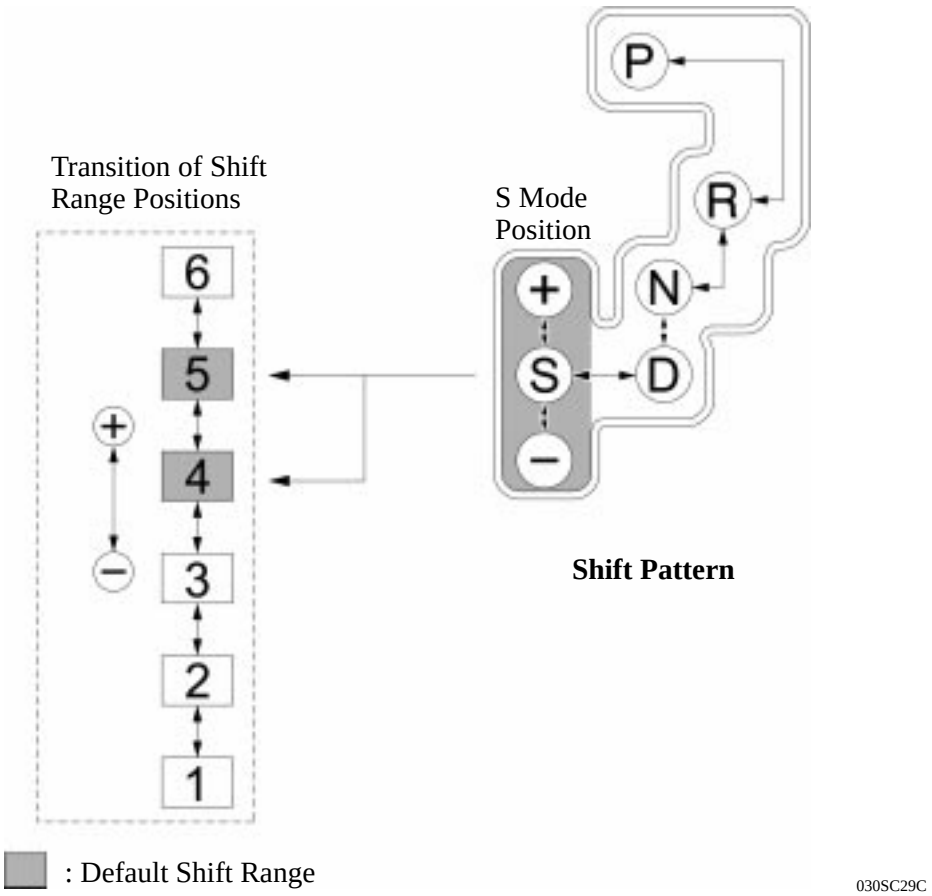

▶ **Usable Gear Chart ●**

Shift Range Indicator Light Indication	Shift Range	Usable Gear
6	6	6th ↔ 5th ↔ 4th ↔ 3rd ↔ 2nd ↔ 1st
5	5	5th ↔ 4th ↔ 3rd ↔ 2nd ↔ 1st
4	4	4th ↔ 3rd ↔ 2nd ↔ 1st
3	3	3rd ↔ 2nd ↔ 1st
2	2	2nd ↔ 1st
1	1	1st

13. Diagnosis

When the ECT ECU detects a malfunction, the ECT ECU makes a diagnosis and memorizes the information related to the fault. Furthermore, the MIL (Malfunction Indicator Lamp) in the combination meter illuminates or blinks to inform the driver of the malfunction.

At the same time, the DTC (Diagnosis Trouble Code) are stored in the memory. The DTC stored in the ECT ECU are output to a hand-held tester connected to the DLC3 via the ECM.

For details, see the 2007 Camry Repair Manual (Pub. No. RM0250U).

Service Tip

The ECM uses the CAN protocol for diagnostic communication. Therefore, a hand-held tester and a dedicated adapter [CAN VIM (Vehicle Interface Module)] are required for accessing diagnostic data. For details, see the 2007 Camry Repair Manual (Pub. No. RM0250U).

14. Fail-safe

This function minimizes the loss of operation when any abnormality occurs in a sensor or solenoid.

▶ Fail-safe Control List ●

Malfunction Part	Function
Input Turbine Speed Sensor	Shifting to only either the 1st or 3rd gears is allowed.
Counter Gear Speed Sensor	The counter gear speed is detected through the signals from the skid control ECU (speed sensor signals). Shifting between the 1st to 4th gears is allowed.
ATF Temp. Sensor	Shifting between the 1st to 4th gears is allowed.
ECT ECU Power Supply (Voltage is Low)	When the vehicle is being driven in 6th gear, the transaxle is fixed in 6th gear. When being driven in any of the 1st to 5th gears, the transaxle is fixed in 5th gear.
CAN Communication	Shifting to only either the 1st or 3rd gears is allowed.
Knock Sensor	Shifting between the 1st to 4th gears is allowed.
Solenoid Valve SL1, SL2, SL3 and SL4	The current to the failed solenoid valve is cut off and operating the other solenoid valves with normal operation performs shift control. (Shift controls in fail-safe mode are described in the table on the next page. For details, refer to Fail-Safe Control List)

▶ Solenoid Valve Operation when Normal ●

Gear Position		1st	2nd	3rd	4th	5th	6th
Solenoid Valve	SL1					X	X
	SL2	X	X	X			
	SL3	X		X	X	X	
	SL4	X	X		X		X

▶ Fail-safe Control List ●

	Gear Position in Normal Operation	1st	2nd	3rd	4th	5th	6th
SL1	OFF Malfunction (without Fail-safe Control)	1st △ N	2nd △ N	3rd △ N	4th △ N	5th	6th
	ON Malfunction (without Fail-safe Control)*1	1st	2nd	3rd	4th	5th △ 4th	6th △ 4th
	Fail-safe Control during OFF Malfunction	Fixed in 3rd or 5th*2					
	Fail-safe Control during OFF Malfunction (ATF Pressure Switches 1 or 2 Malfunctions)	Fixed in 3rd or 5th*2					
SL2	OFF Malfunction (without Fail-safe Control)	1st	2nd	3rd	4th △ 1st	5th △ N	6th △ N
	ON Malfunction (without Fail-safe Control)*1	1st △ 4th	2nd △ 4th	3rd △ 4th	4th	5th	6th
	Fail-safe Control during OFF Malfunction	1st	2nd	3rd	3rd*3	3rd*3	3rd*3
	Fail-safe Control during OFF Malfunction (ATF Pressure Switches 1 or 2 Malfunctions)	Fixed in 2nd or 3rd*3					
SL3	OFF Malfunction (without Fail-safe Control)	1st	2nd △ 1st	3rd	4th	5th	6th △ N
	ON Malfunction (without Fail-safe Control)*1	1st △ 2nd	2nd	3rd	4th	5th	6th
	Fail-safe Control during OFF Malfunction	1st	3rd	3rd	4th	5th	5th*3
	Fail-safe Control during OFF Malfunction (ATF Pressure Switches 1 or 2 Malfunctions)	Fixed in 3rd*3					
SL4	OFF Malfunction (without Fail-safe Control)	1st	2nd	3rd △ 1st	4th	5th △ N	6th
	ON Malfunction (without Fail-safe Control)*1	3rd	3rd	3rd	4th	5th	5th
	Fail-safe Control during OFF Malfunction	1st*4	2nd*4	4th*4	4th*4	6th	6th
	Fail-safe Control during OFF Malfunction (ATF Pressure Switches 1 or 2 Malfunctions)	Fixed in 2nd*3					

*1: Fail-safe control is not actuated when the ON malfunction occurs.

*2: If malfunctions already exist in any of the P, R or N range positions and a malfunction is detected when the gear is shifted to the 1st gear, the gear position is fixed in the 5th gear. After that, if any of the P, R or N range positions is selected, the gear is fixed in the 3rd gear position.

*3: The gear is fixed in the neutral position until the vehicle speed reaches a certain speed that enables the transaxle to be shifted.

*4: Shifting to the 5th and 6th gears is prohibited.

▪ SHIFT CONTROL MECHANISM

1. General

A gate type shift lever is used in conjunction with the 6-speed automatic transaxle. With the gate type lever, the shift lever button and the overdrive switch of the straight type shift lever are discontinued. Similar functions are achieved through a single-shift operation (fore-aft and side-to-side).

The shift control cable with a length adjustment mechanism is used.

Shift pattern is provided with the S mode position on the side of the D position.

A shift lock system is used.

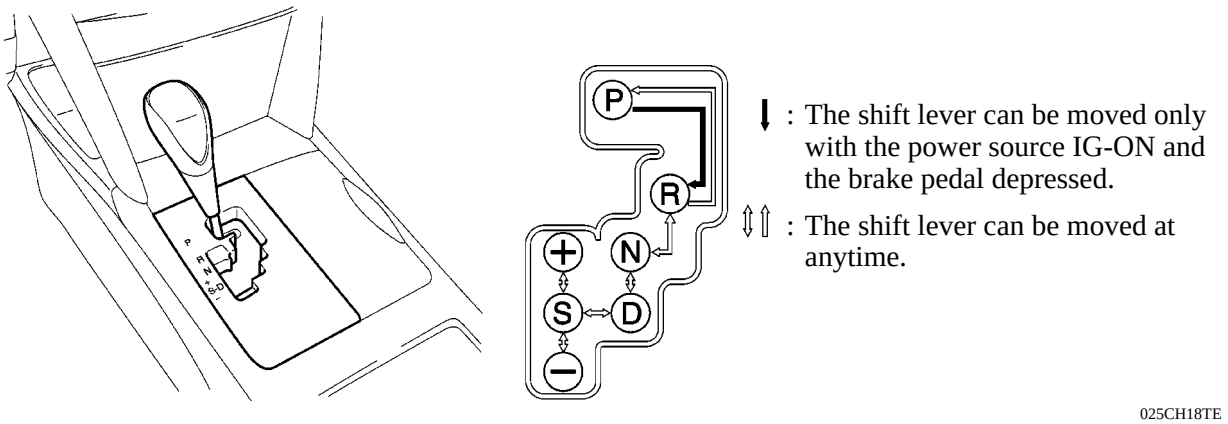

Service Tip

The shift control cable is fixed by the lock piece of the adjustment mechanism. Adjustment of the shift control cable is possible by releasing the lock piece from the cable. For details, see the 2007 Camry Repair Manual (Pub. No. RM0250U).

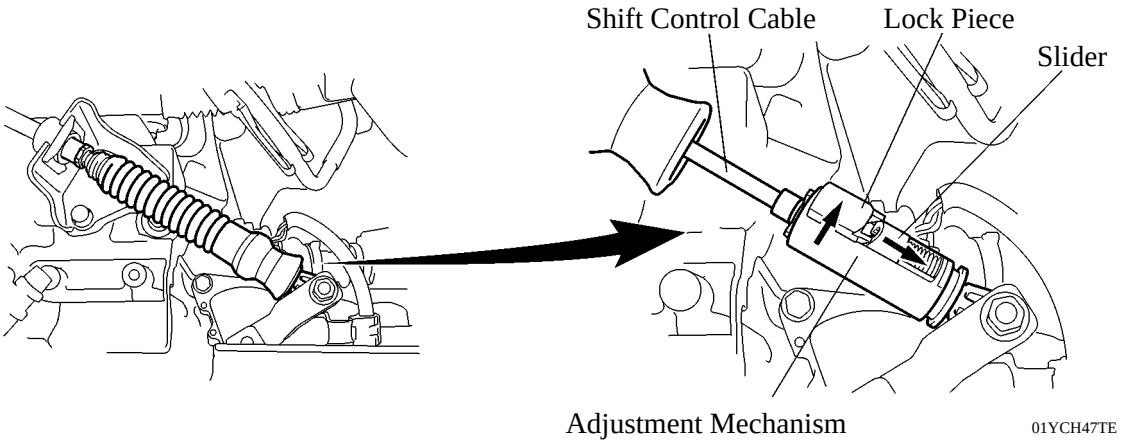

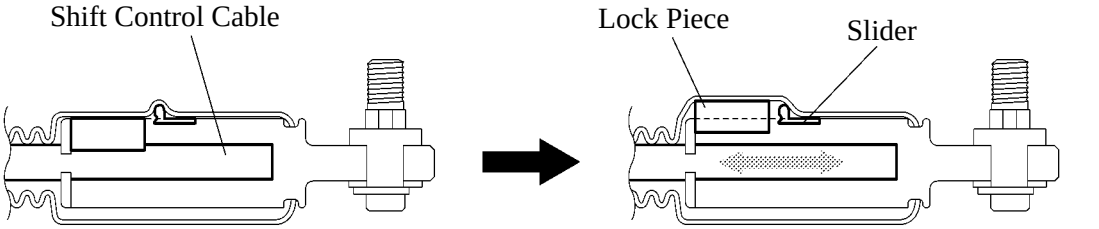

Adjustment Mechanism Cross Section

2. Shift Lock System

General

The shift lock system function setting is as follows:

Function	Without Smart Key System	With Smart Key System
Key Interlock		—
Shift Lock		

The key interlock device prevents the key from being pulled out after the ignition switch is turned OFF, unless the shift lever is moved to the P position. Thus, the driver is urged to park the vehicle in the P position.

The shift lock mechanism prevents the shift lever from being shifted to any position other than the P position, unless the ignition switch is ON (unless the IG-ON mode is selected)*1, and the brake pedal is depressed. This mechanism helps to prevent unintentional acceleration.

The shift lock system mainly consists of the shift lock ECU, shift lock solenoid, key interlock solenoid*2 and shift lock override button.

The shift lock solenoid has a built-in P detection switch.

*1: Models with smart key system
*2: Except models with smart key system

▶ System Diagram ●

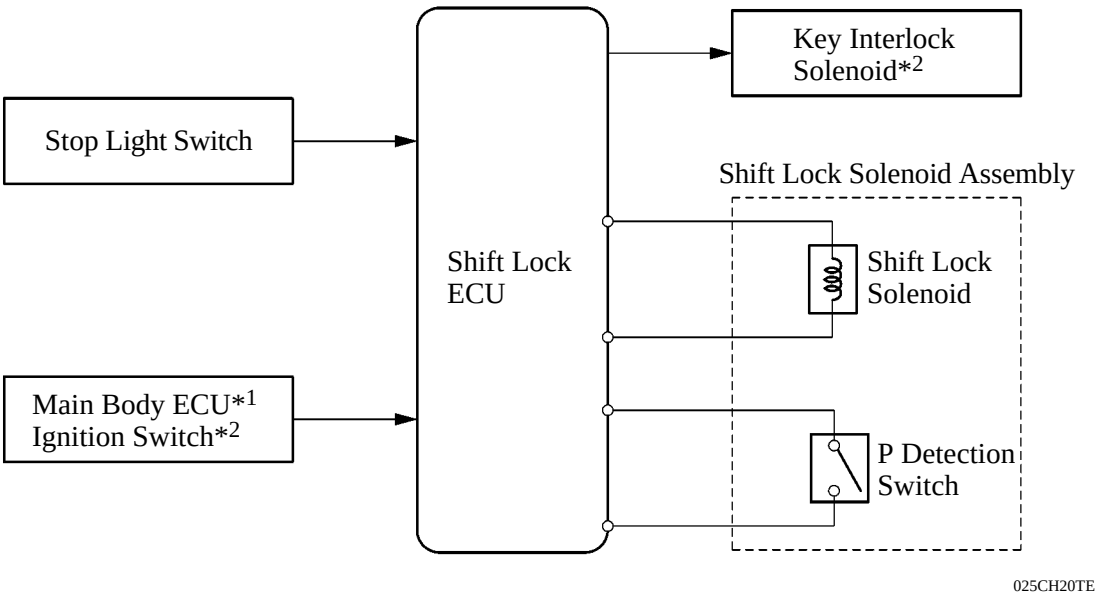

*1: Models with smart key system
*2: Except models with smart key system

Layout of Main Components

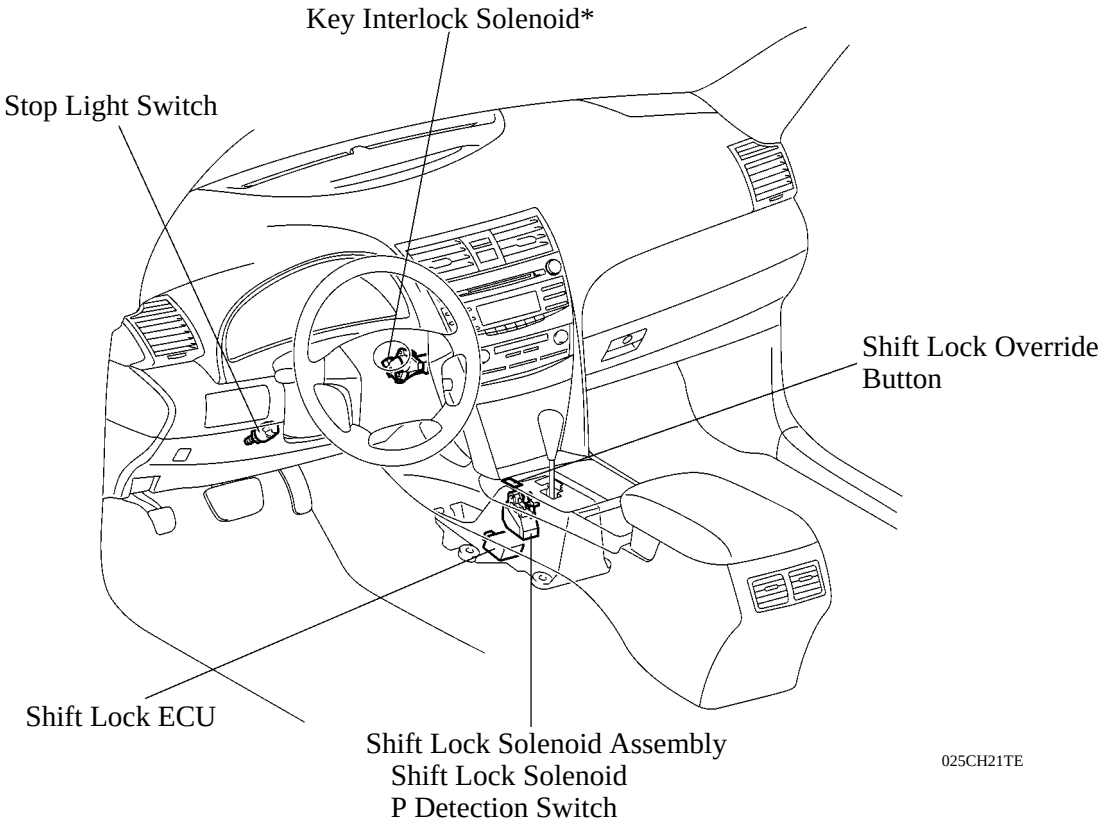

*: Except models with smart key system

Key Interlock Solenoid

The activation of the key interlock solenoid that is mounted on the upper column bracket moves the lock pin to restrict the movement of the key cylinder. Therefore, if the shift lever is shifted to any position other than “P”, the ignition key cannot be moved from “ACC” to the “LOCK” position.

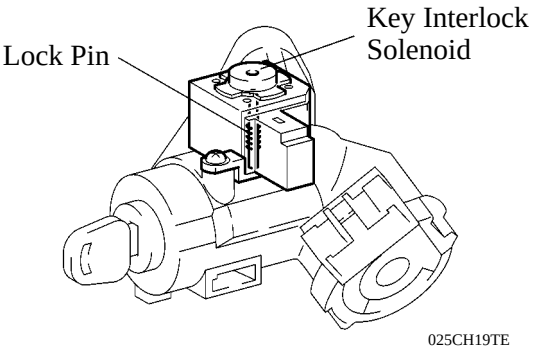

System Operation

Models with smart key system: The shift lock ECU uses the P detection switch to detect the shift lever position, and receives inputs from the stop light switch and the main body ECU. Upon receiving these signals, the shift lock ECU turns ON the shift lock solenoid in order to release the shift lock.

Models without smart key system: The shift lock ECU uses the P detection switch to detect the shift lever position, and receives inputs from the stop light switch and the ignition switch. Upon receiving these signals, the shift lock ECU turns ON the key interlock solenoid and the shift lock solenoid in order to release the key interlock and shift lock.

A shift lock override button, which manually overrides the shift lock mechanism, is used.

DRIVE SHAFT

DESCRIPTION

The drive shaft uses a tripod type CVJ (Constant Velocity Joint) on the differential side, and Rzeppa type CVJ on the wheel side.

▶ 2GR-FE Engine Models ●

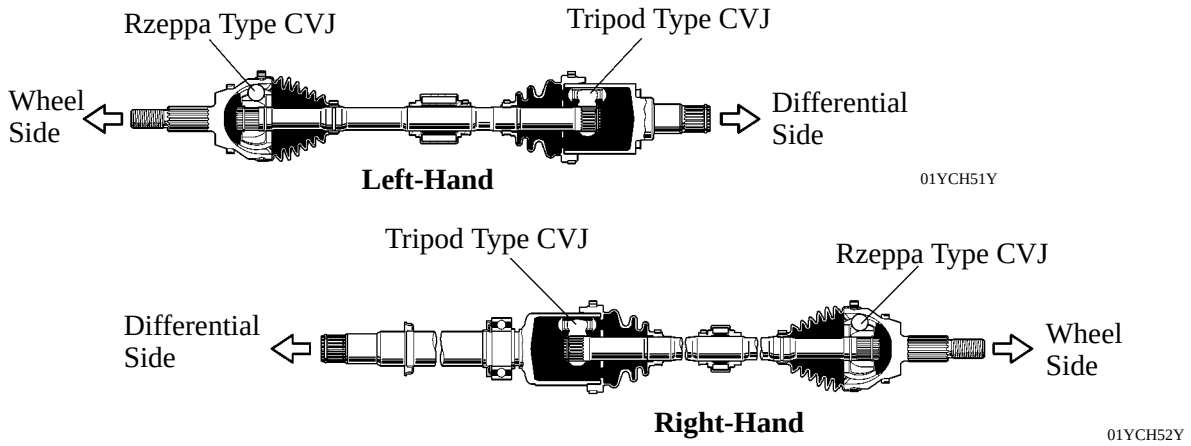

▶ 2AZ-FE Engine AT Models with AT ●

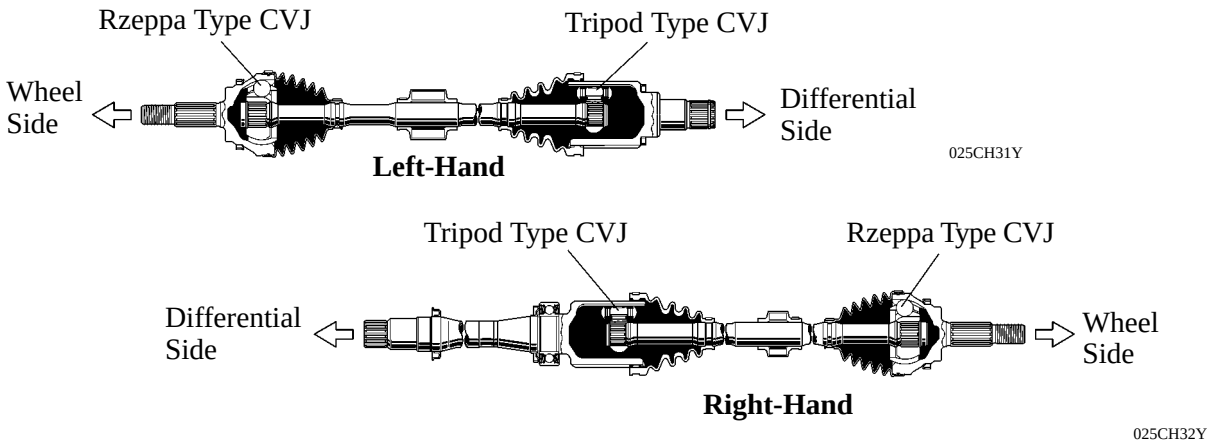

▶ 2AZ-FE Engine MT Models with MT ●

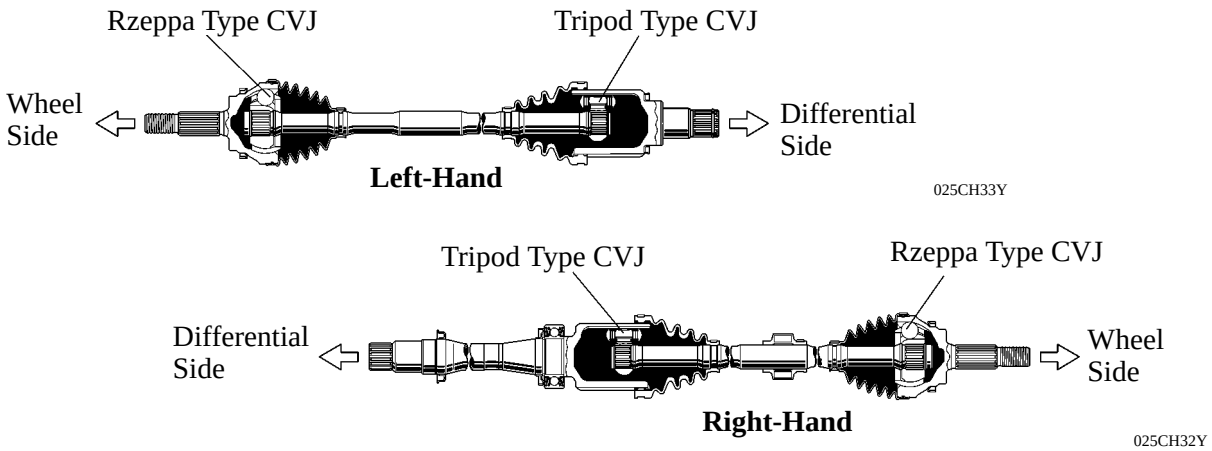

SUSPENSION AND AXLE

▪ SUSPENSION

1. General

MacPherson strut type independent suspension is used for the front.

Dual link MacPherson strut type independent suspension is used for the rear.

The ’07 Camry has TMC made models and TMMK made models. The basic construction and operation of these models are the same.

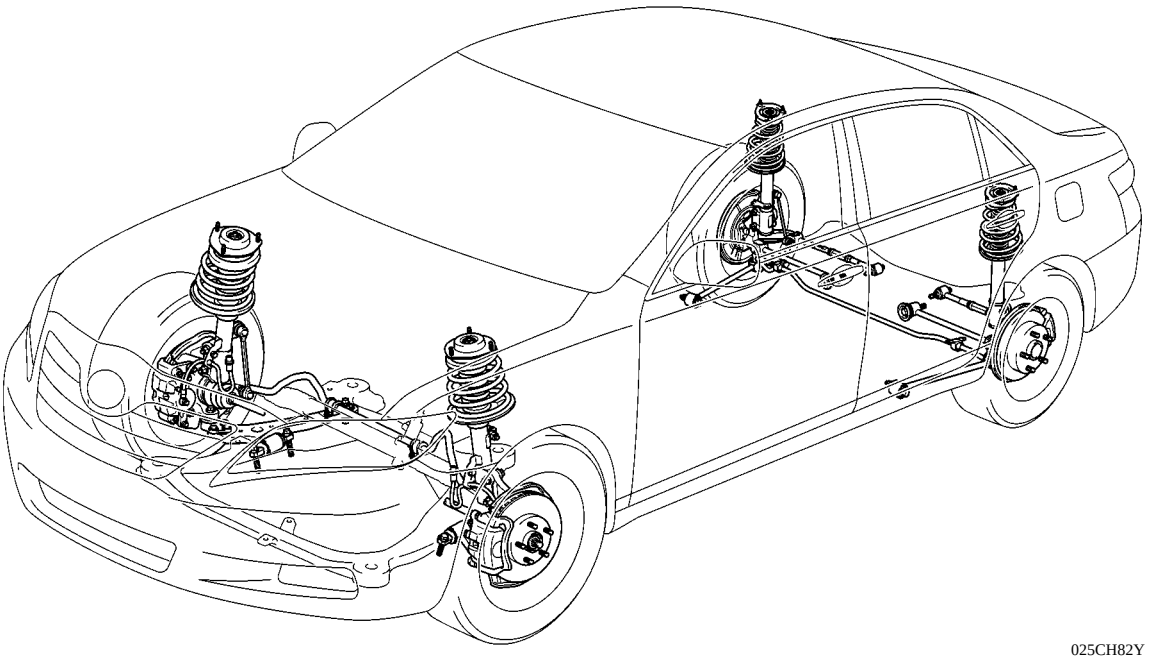

025CH82Y

▶ Specifications ●

Item			Manufacturer	
			TMC	TMMK
Front Wheel Alignment	Type		MacPherson Strut	Δ
	Tread*1	mm (in.)	1,575 (62.0)	Δ
	Caster*1	degrees	2 55’	2 55’, 3 00’*2
	Camber*1	degrees	-0 40’	Δ
	Toe-in*1	mm (in.)	0	Δ
	King Pin Inclination*1	degrees	12 15’	Δ
Rear Wheel Alignment	Type		Dual link MacPherson Strut	Δ
	Tread*1	mm (in.)	1,565 (61.6)	Δ
	Camber*1	degrees	-1 15’	-1 18’
	Toe-in*1	mm (in.)	4 (0.16)	Δ

*1: Unload Vehicle Condition

*2: Only for 2AZ-FE engine models with AT

2. Front Suspension

General

Through the optimal location of components, and the use of Nachlauf geometry, the front suspension provides excellent riding comfort and controllability.

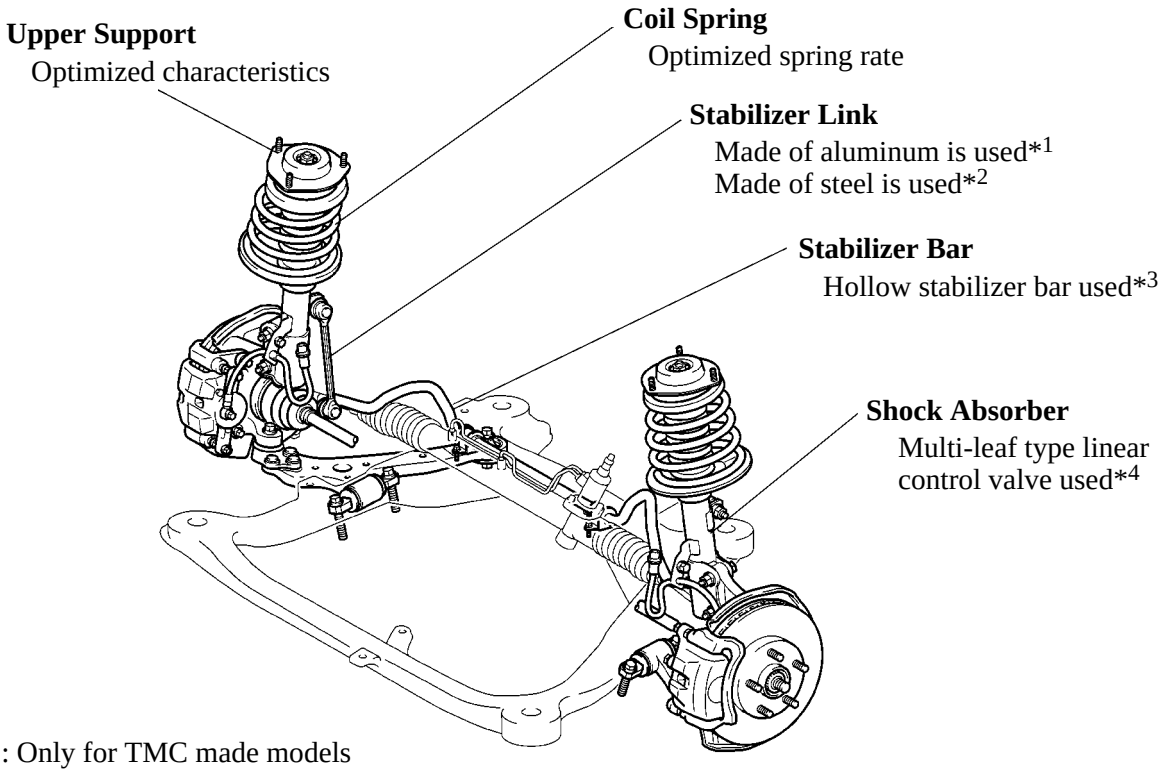

*1: Only for TMC made models
*2: Only for TMMK made models
*3: Only for LE and XLE grade models
*4: Only for SE grade models

Service Tip

To prevent hazardous conditions, make sure to empty the gas from the shock absorber before discarding a low-pressure (N_2) gas sealed shock absorber. For details, see the 2007 Camry Repair Manual (Pub. No. RM0250U).

Nachlauf Geometry

The front suspension uses the Nachlauf geometry in which the king pin axis is located ahead of the axle center. As a result, excellent straight-line stability and steering feel has been improved.

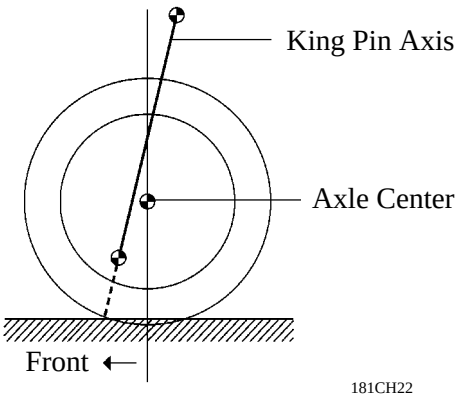

Shock Absorber

1) General

The two functions listed below are used for the shock absorber to realize both driving stability and riding comfort.

A low-pressure (N_2) gas sealed type construction is used to suppress cavitation.

A multi-leaf type linear control valve is used on SE grade models to attain linear damping force characteristics.

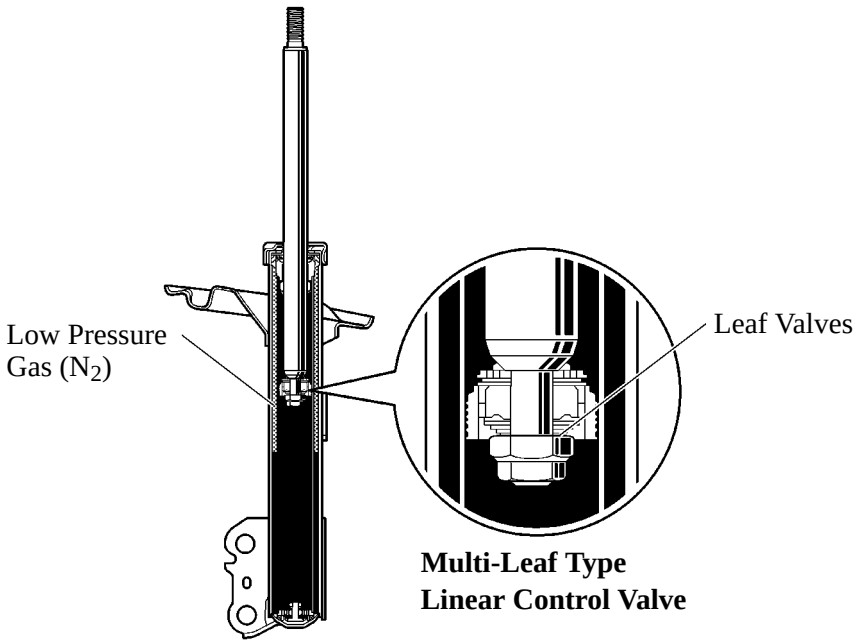

SE Grade Models

025CH35Y

2) Construction of Multi-Leaf type Linear Control Valve

The multi-leaf type linear control valve has a structure consisting of several layered leaf valves with different diameters. Through us of the multi-leaf type linear control valve, changes in the damping force are made constant at low piston speeds, thus realizing excellent riding comfort and controllability.

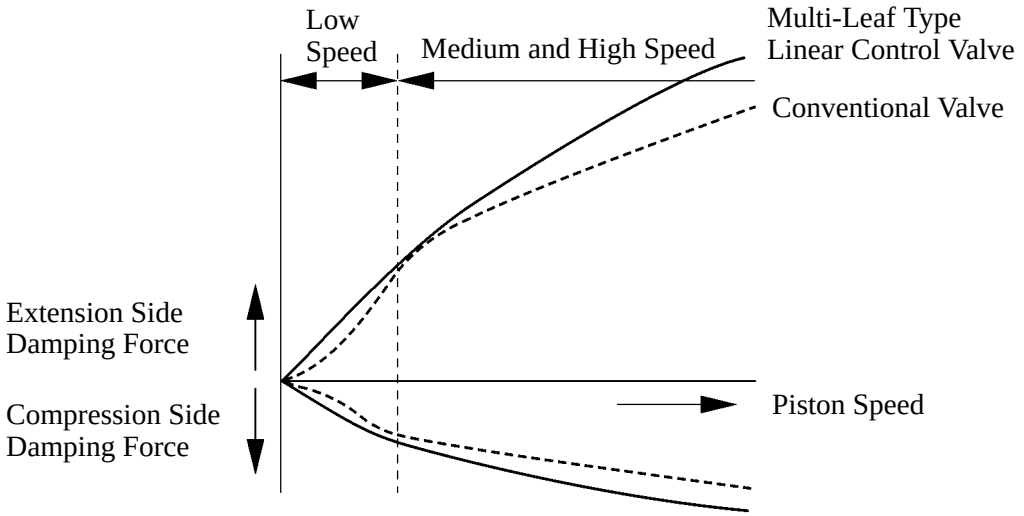

199CH110

Damping Force Characteristics

3. Rear Suspension

General

Rear suspension realizes excellent stability and controllability by optimizing the suspension geometry and the allocation of components.

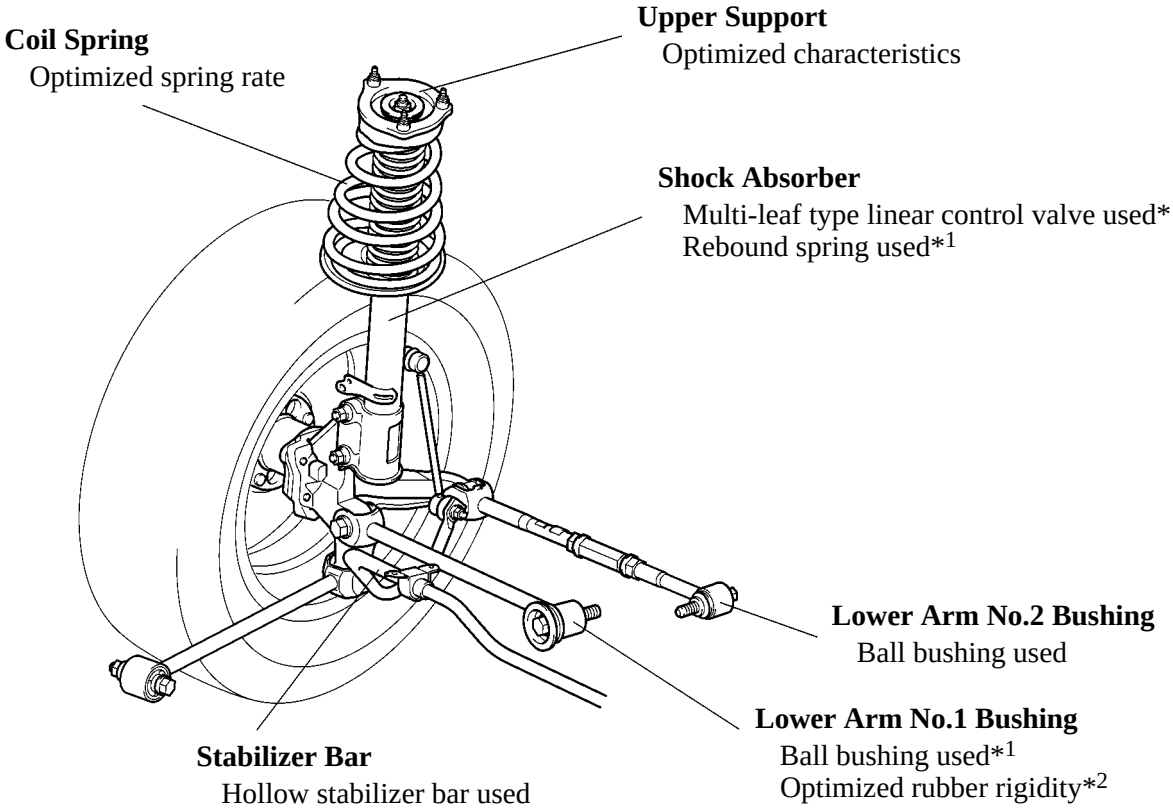

*1: SE grade models
*2: LE and XLE grade models

025CH84Y

Service Tip

To prevent hazardous conditions, make sure to empty the gas from the shock absorber before discarding a low-pressure (N_2) gas sealed shock absorber. For details, see the 2007 Camry Repair Manual (Pub. No. RM0250U).

Shock Absorber

1) General

The three functions listed below are used for the shock absorber to realize both driving stability and riding comfort.

A low-pressure (N_2) gas sealed type construction is used to suppress cavitation.

A multi-leaf type linear control valve is used on SE grade models to attain linear damping force characteristics. For details, refer to Front Suspension section on page CH-83.

A rebound spring is used on SE grade models to ensure vehicle stability during cornering.

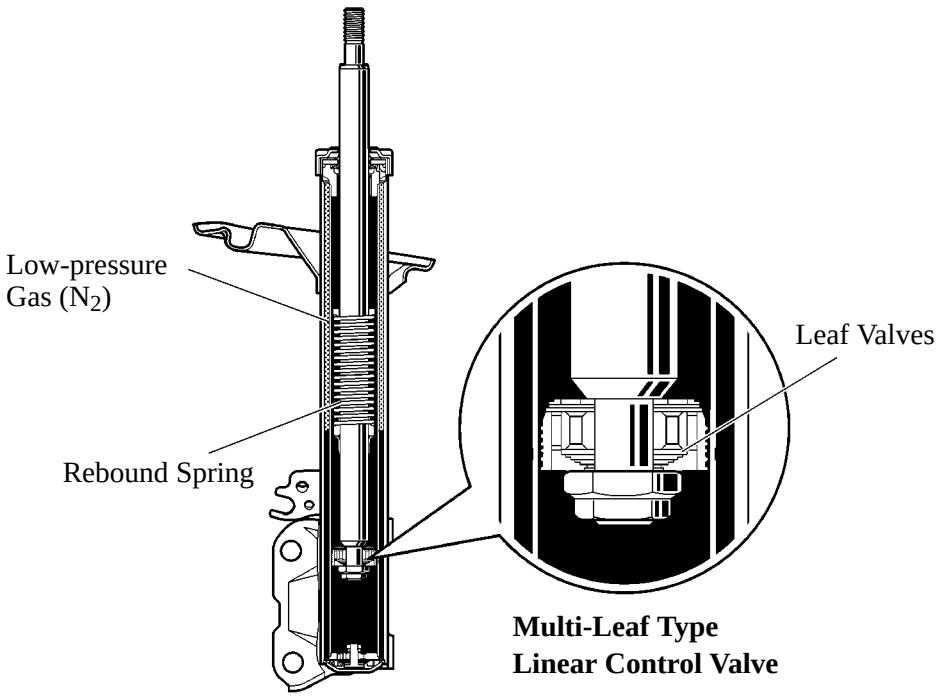

SE Grade Models

025CH36Y

2) Rebound Spring

The function of the built-in rebound spring is to combine with the function of the coil spring in order to restrain the elongation of the entire suspension during rebounds. Consequently, only the function of the coil spring is applied when the suspension stroke is small during normal driving, in order to realize a soft and comfortable ride. However, when the inner wheel makes large rebounds, such as when the vehicle is cornering, the functions of both the rebound spring and the coil spring are combined in order to reduce the elongation of the entire suspension. As a result, the vehicle has excellent maneuverability and stability.

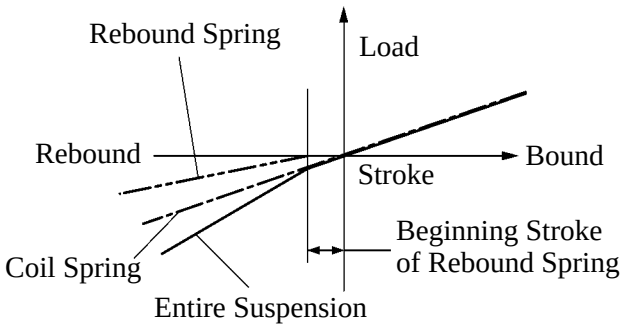

Characteristic of Shock Absorber with Built-in Rebound Spring

185CH16

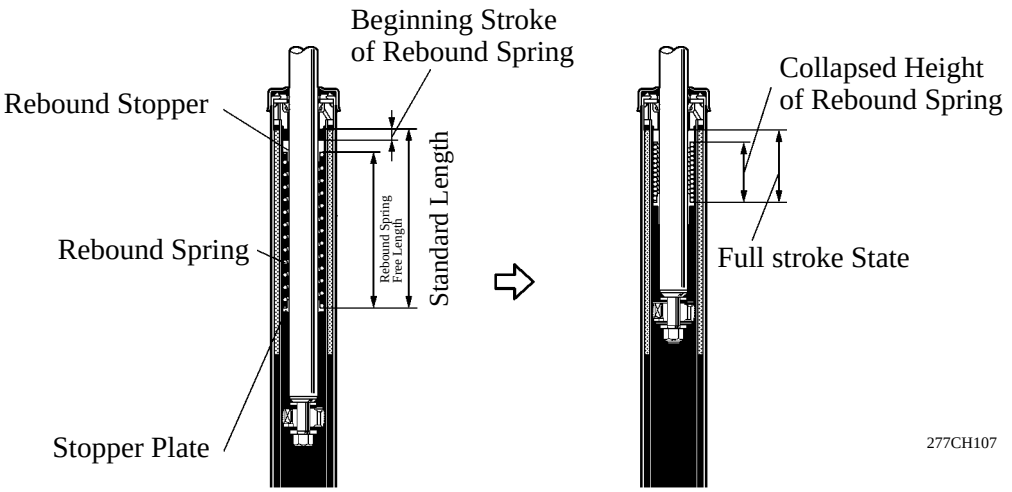

277CH107

▶ **During Cornering ●**

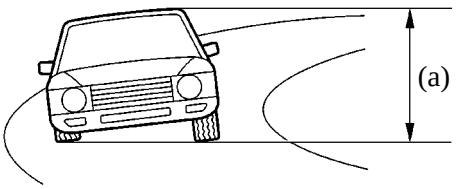

Without Rebound Spring

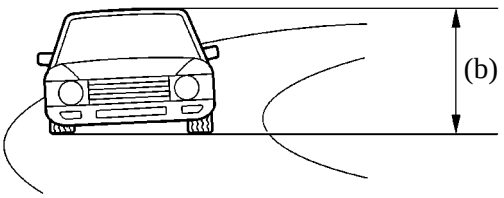

With Rebound Spring

(a) > (b)

241CH90

Cornering Geometry

When a lateral force is generated, the load becomes distributed to the No.1 and No.2 suspension arms. The illustration shown below indicates the lateral force distribution on suspension arms of the right side rear wheel during left cornering. This causes the wheels to toe-in, in order to ensure the proper stability of the rear suspension.

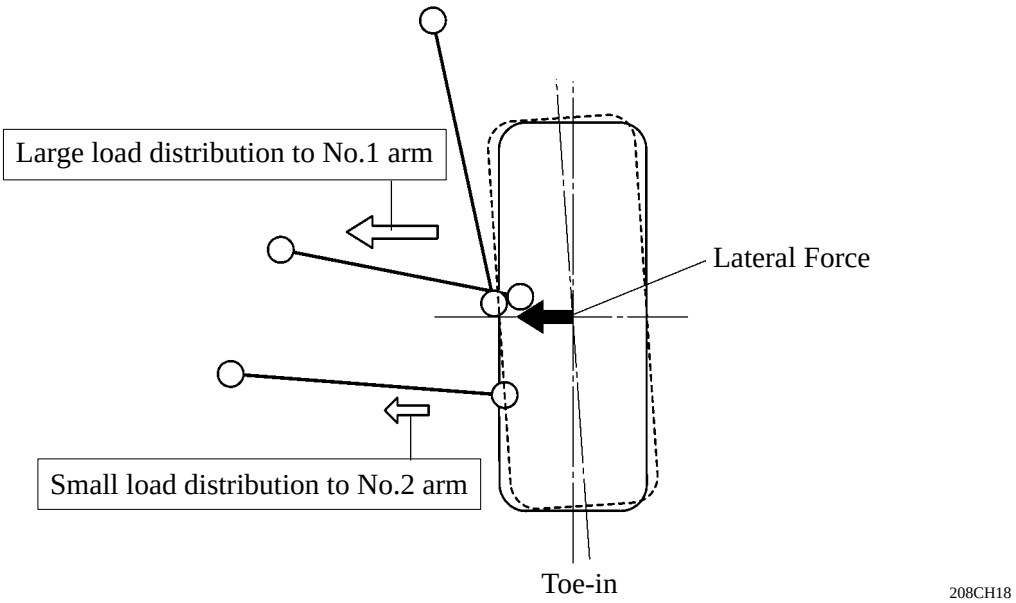

Braking Geometry

When the longitudinal force is generated, the displacement locus of the No.1 and No.2 suspension arms will toe-in as shown below, in order to ensure the stability of the vehicle.

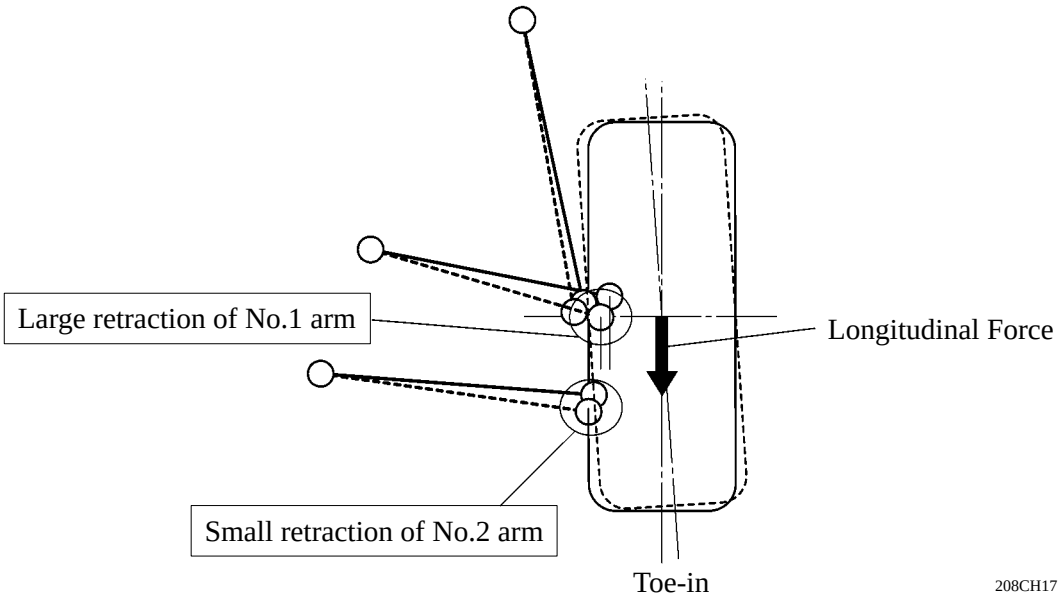

●AXLE

1. Front Axle

▶The front axle uses compact and highly double-row angular ball bearings. The bearings and the axle hub have been integrated to ensure high rigidity, thus realizing excellent driving and braking stability.

▶A lock nut (12-point) is used and staked in order to ensure that the axle hub is properly secured. Once removed, this nut cannot be reused.

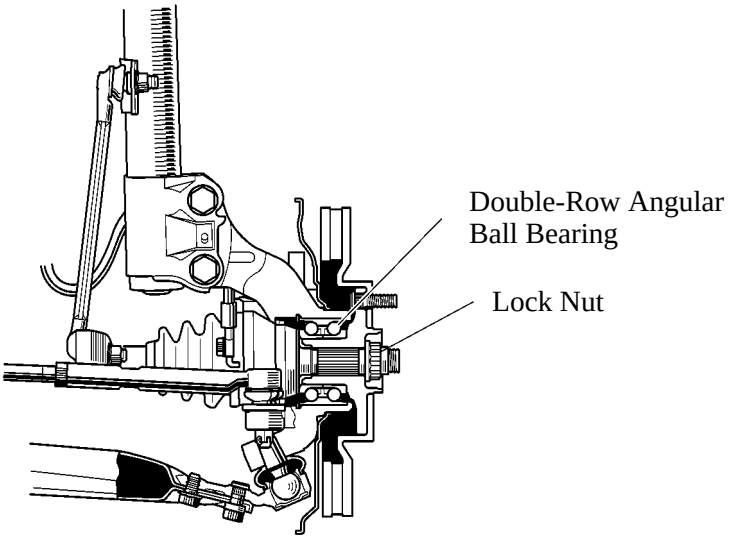

025CH85Y

2. Rear Axle

A compact and highly rigid double-row angular ball bearing is used on the front axle. The double-row angular ball bearing and the axle hub have been integrated to ensure high rigidity, thus realizing excellent driving stability and braking stability.

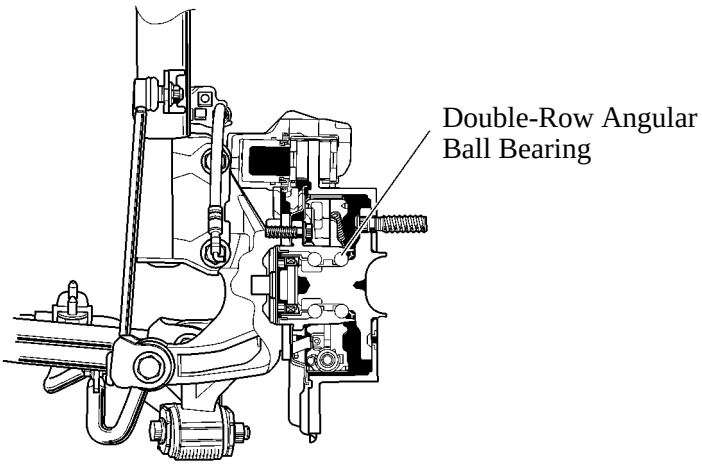

025CH86Y

BRAKE

▪ DESCRIPTION

1. General

Models with the brake control system consisting of ABS with EBD and Brake Assist use a mechanical type brake assist mechanism, which is integrated into the brake booster.

Models with the brake control system consisting of ABS with EBD, Brake Assist, TRAC and VSC use an electrical type brake assist mechanism, which effects brake assist control through the brake actuator.

Due to the difference of the production site, the brake actuator, used on ABS with EBD, Brake Assist, TRAC and VSC models, is supplied from two different suppliers.

The ’07 Camry has a brake system with the following specifications:

Front Brake Type		Ventilated Disc
Rear Brake Type		Solid Disc
Brake Control System	ABS with EBD, Brake Assist	Standard
	ABS with EBD, Brake Assist, TRAC and VSC	Option
Parking Brake Lever Type	AT Model	Pedal Type
	MT Model	Lever Type

▶ Specifications ●

Master Cylinder	Type	Tandem (Plunger type)
	Diameter mm (in.)	22.22 (0.87)
Brake Booster	Type	Single, Tie Rod Type
	Size in.	10
Front Disc Brake	Caliper Type	PE63
	Wheel Cylinder Dia. mm (in.)	63.5 (2.5)
	Rotor Size (D x T)* mm (in.)	296 x 28 (11.65 x 1.10)
	Pad Material	PN562H
Rear Disc Brake	Caliper Type	PEAL38
	Wheel Cylinder Dia. mm (in.)	38.1 (1.50)
	Rotor Size (D x T)* mm (in.)	281 x 10 (11.06 x 0.39)
	Pad Material	D6234
Parking Brake	Type	Duo Servo
	Drum Inner Dia. mm (in.)	170.0 (6.69)
Brake Actuator Supplier	For ABS with EBD	Bosch
	For ABS with EBD, Brake Assist, TRAC and VSC	ADVICS (TMC Made Models)
		Bosch (TMMK Made Models)

*: D: Outer Diameter, T: Thickness

Service Tip

To ensure the performance and reliability of the plunger type master cylinder, it must not be disassembled. If it malfunctions, replace the entire assembly.

Before removing the plunger type master cylinder from the brake booster, discharge the vacuum from the brake booster. Otherwise, the piston of the master cylinder may be left inside the brake booster.

For details, see the 2007 Camry Repair Manual (Pub. No. RM0250U).

2. Component of Brake System

TMC Made Models

▶ **Master Cylinder ●**

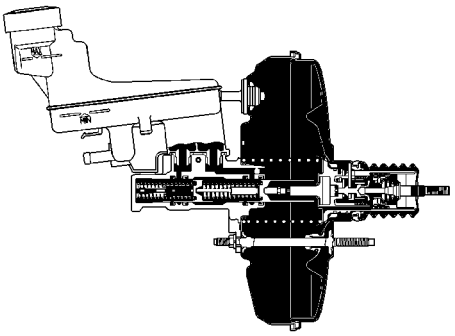

Models with mechanical type brake assist mechanism

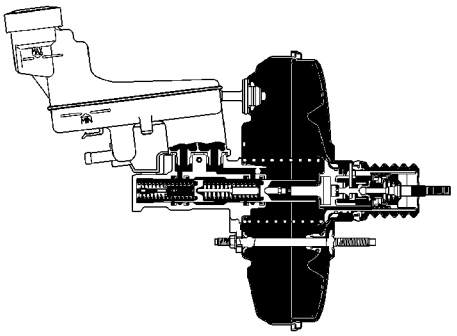

Except models with mechanical type brake assist mechanism

▶ **Parking Brake ●**

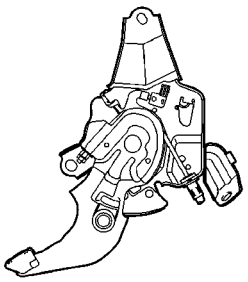

Pedal Type

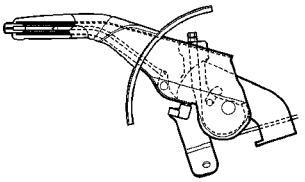

Lever Type

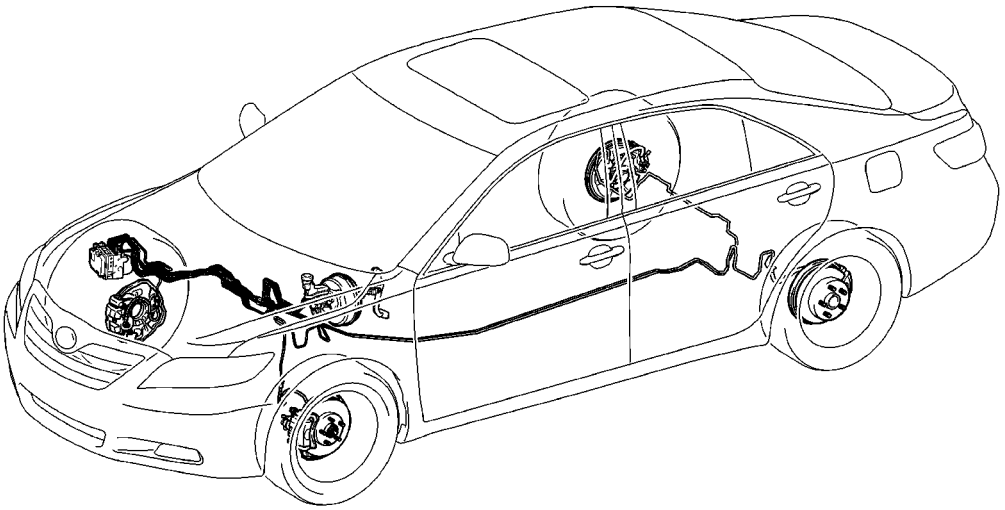

▶ **Front Brake ●**

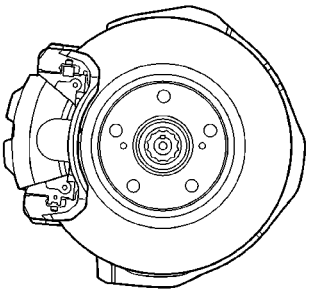

▶ **Rear Brake ●**

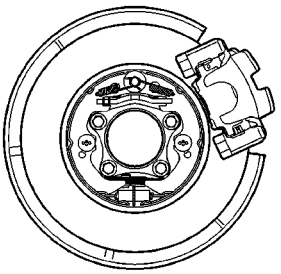

025CH54TE

TMMK Made Models

▶ **Master Cylinder ●**

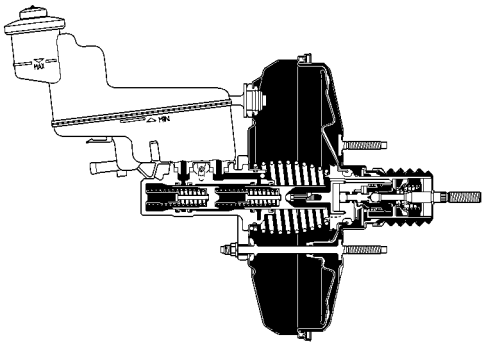

Models with mechanical type brake assist mechanism

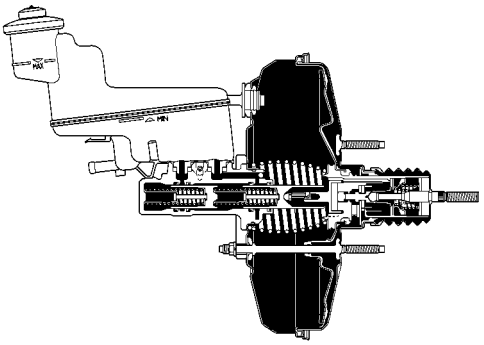

Except models with mechanical type brake assist mechanism

▶ **Parking Brake ●**

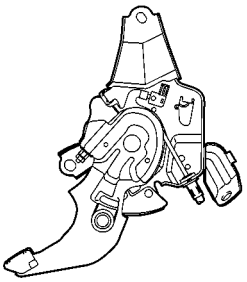

Pedal Type

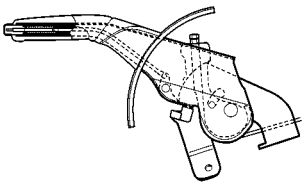

Lever Type

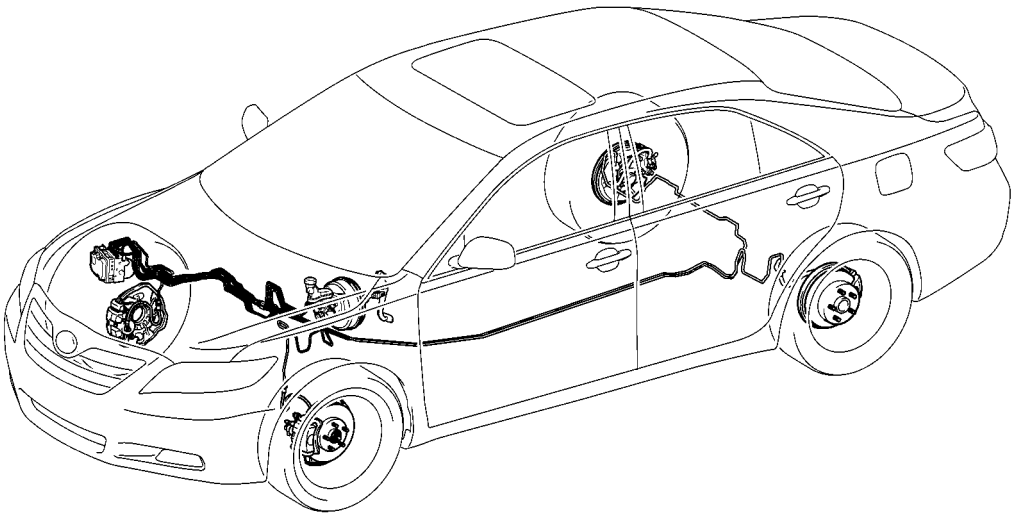

▶ **Front Brake ●**

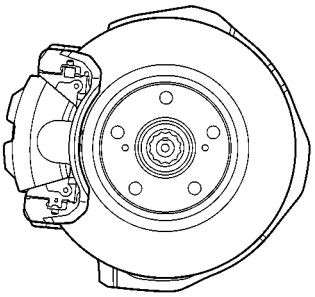

▶ **Rear Brake ●**

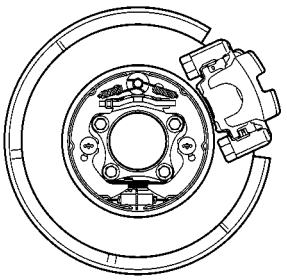

025CH55TE

●Front Brake

▶The diameter of the front rotors is 296 mm (11.65 in.). They are the ventilated type that excels in heat dissipation to ensure reliability.

▶The shape of the front dust cover has been optimized to efficiently direct cool air to the ventilated disc, thus ensuring excellent cooling performance.

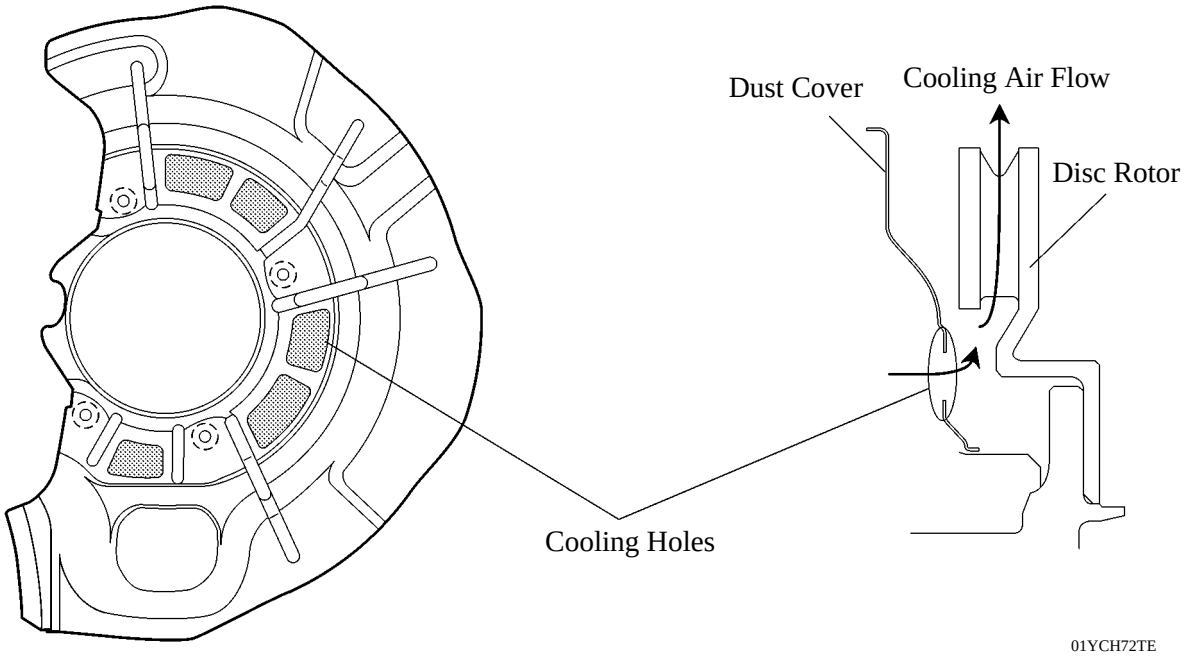

●Rear Brake

▶The diameter of the rear rotors is 281 mm (11.06 in.). It has a built-in duo servo type parking brake.

▶For weight reduction, a caliper cylinder made of aluminum is used for the rear caliper of the ’07 Camry.

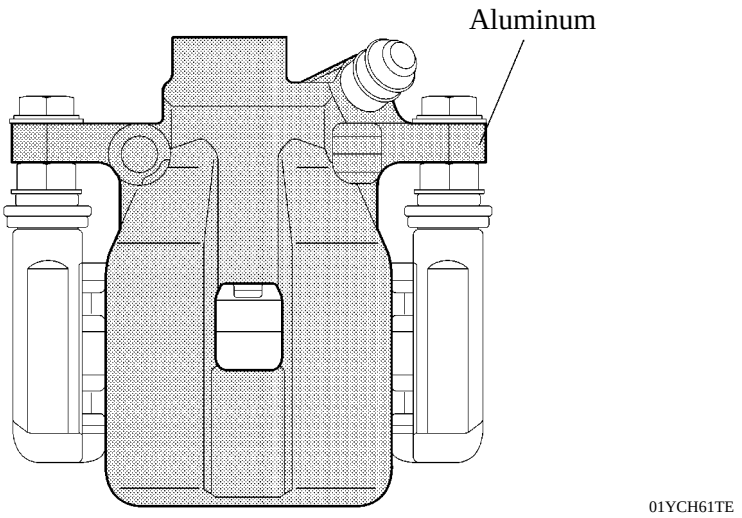

▪ BRAKE CONTROL SYSTEM (ABS with EBD)

1. General

The brake control system (ABS with EBD) of ’07 Camry has the following functions:

Function	Outline
ABS (Anti-lock Brake System)	The ABS helps prevent the wheels from locking when the brakes are applied firmly or when braking on a slippery surface.
EBD (Electronic Brake force Distribution)	The EBD control utilizes ABS, realizing the proper brake force distribution between front and rear wheels in accordance with the driving conditions. In addition, during cornering braking, it also controls the brake forces of right and left wheels, helping to maintain the vehicle behavior.
Brake Assist (Mechanical Type)	The primary purpose of the Brake Assist system is to provide an auxiliary brake force to assist the driver who cannot generate a large brake force during emergency braking, thus helping draw the vehicle’s brake performance.

Service Tip

When the brake control system is activated, the brake pedal could shudder, which is a normal occurrence of the system in operation, and should not be considered to be a malfunction.

▶ System Diagram ●

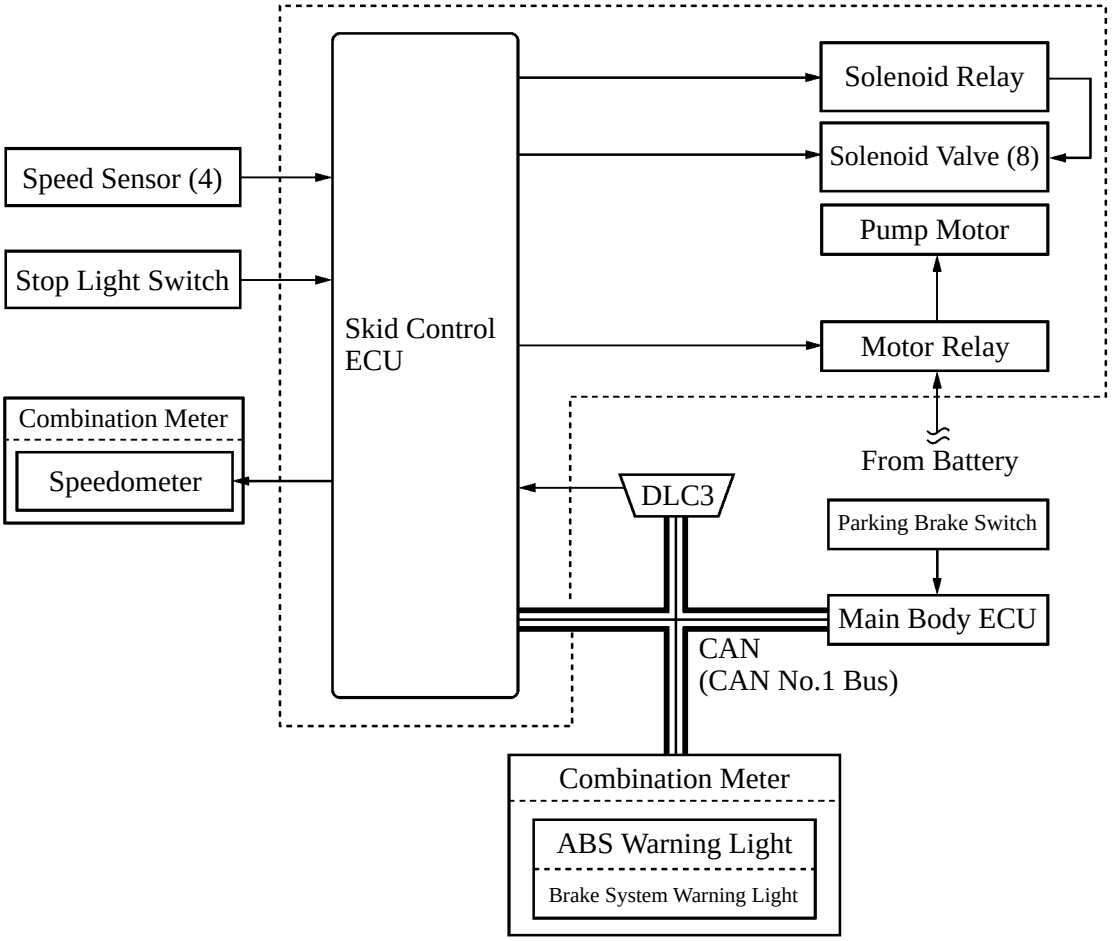

025CH37P

2. Outline of EBD Control

General

The distribution of the brake force, which was performed mechanically in the past, is now performed under electrical control of the skid control ECU, which precisely controls the braking force in accordance with the vehicle's driving conditions.

Front/Rear Wheels Brake Force Distribution

If the brakes are applied while the vehicle is moving straight forward, the transfer of the road reduces the load that is applied to the rear wheels. The skid control ECU determines this condition by way of the signals from the wheel speed sensors, and the brake actuator regulates the distribution of the brake force of the rear wheels to optimally control.
For example, the amount of the brake force that is applied to the rear wheels during braking varies whether or not the vehicle is carrying a load. The amount of the brake force that is applied to the rear wheels also varies in accordance with the extent of the deceleration.
Thus, the distribution of the brake force to the rear is optimally controlled in order to effectively utilize the braking force of the rear wheels under these conditions.

▶ EBD Control Concept ●

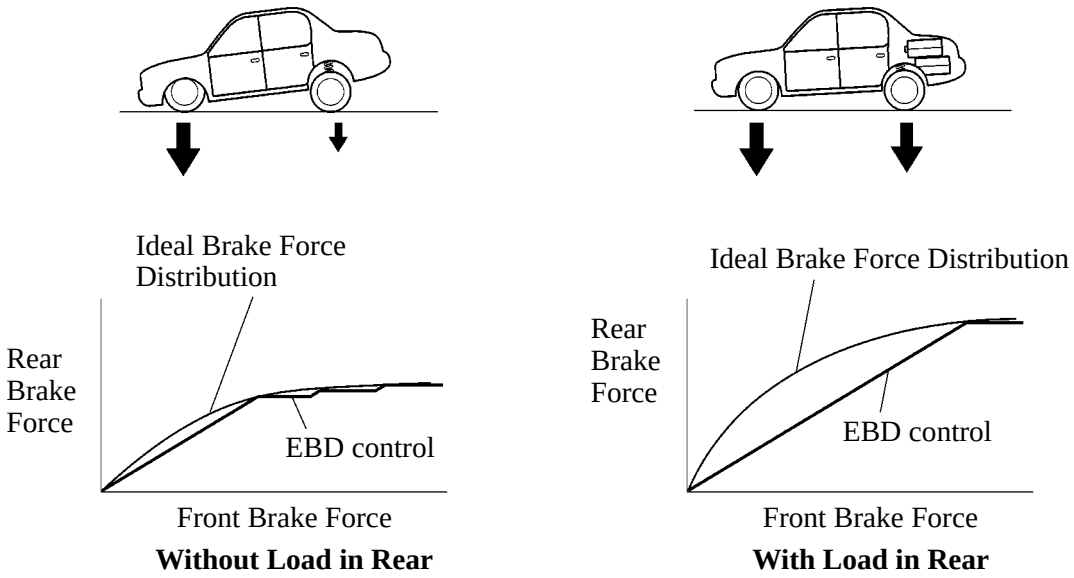

182CH56

Right/Left Wheels Brake Force Distribution (During Cornering Braking)

When the brakes are applied while the vehicle is cornering, the load that applied to the inner wheel decreases and the outer wheel increases.
The skid control ECU determines this condition by way of the signals from the wheel speed sensors, and the brake actuator regulates the brake force in order to optimally control the distribution of the brake force to the inner wheel and outer wheel.

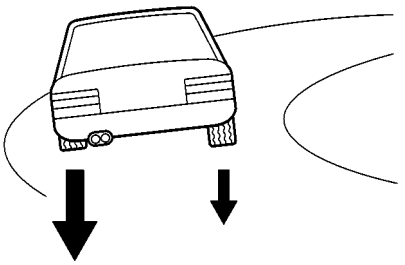

181CH56

3. Outline of Brake Assist System (Mechanical Type)

The brake assist system in combination with ABS helps improve the vehicle's brake performance.

The brake assist system interprets a quick push of the brake pedal as emergency braking and supplements the brake power applied if the driver has not stepped hard enough on the brake pedal. In emergencies, the driver, especially inexperienced ones, often panic and do not apply sufficient pressure on the brake pedal.

A key feature of brake assist system is that the timing and the degree of braking assistance are designed to ensure that the driver does not discern anything unusual about the braking operation.
When the driver intentionally eases up on the brake pedal, the system reduces the amount of assistance it provides.

The mechanical type brake assist uses the brake assist mechanism in the brake booster to mechanically activate the brake booster function in order to increase the brake force. For details, see page CH-98.

▶ In case that the driver's depressing force is small when applying emergency braking ●

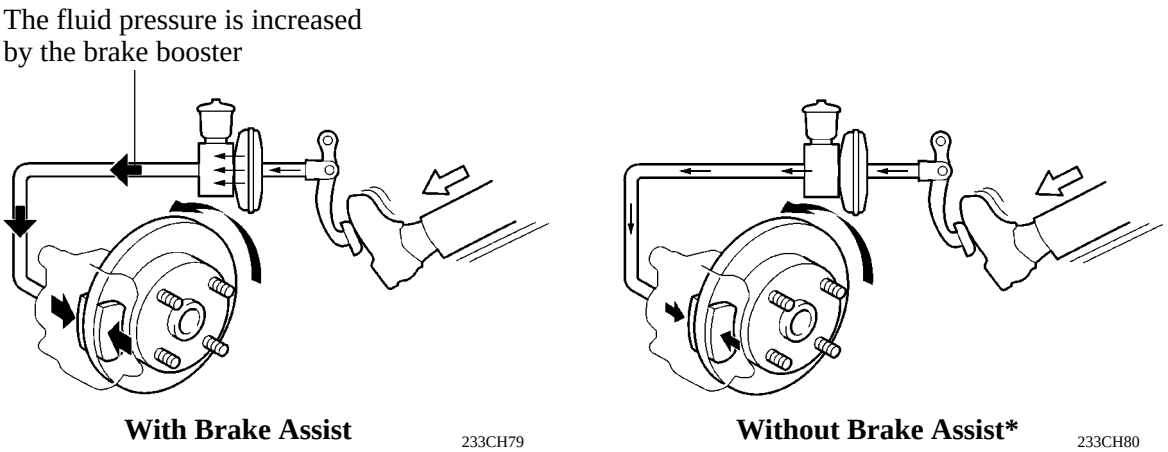

*: The basic performance of the brake is the same as of the models with the brake assist system

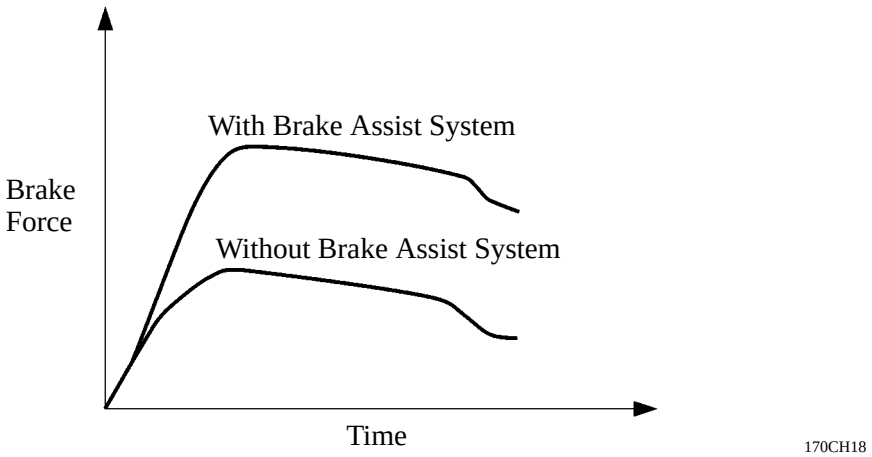

4. Layout of Main Components

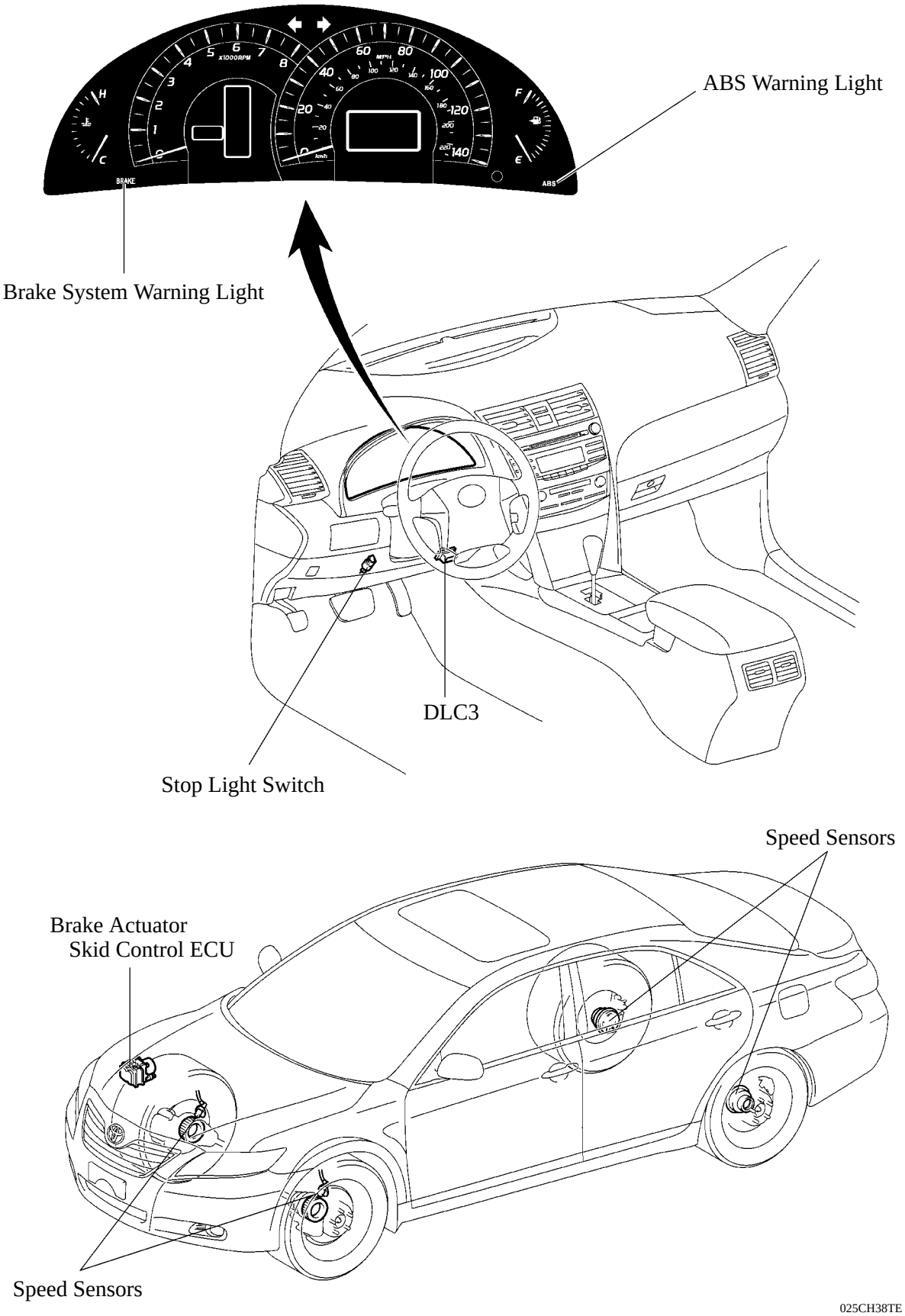

5. Function of Main Components

Component		Function
Combination Meter	Brake System Warning Light	Lights up to alert the driver when a malfunction occurs in the EBD or skid control ECU. Lights up to alert the driver when the brake fluid level is low. Lights up to alert the driver when the parking brake pedal is depressed.
	ABS Warning Light	Lights up to alert the driver when the skid control ECU detects a malfunction in the ABS or EBD.
Brake Fluid Level Warning Switch		Detects the brake fluid level.
Speed Sensors		Detects the wheel speed of each of 4 wheels.
Stop Light Switch		Detects the brake pedal depressing signals.
Parking Brake Switch		Detects the parking brake pedal depressing signals.
Brake Actuator	Actuator Portion	Charges of fluid path based on the signals from the skid control ECU during the operation of the ABS with EBD, in order to control the fluid pressure that is applied to the wheel cylinders.
	Skid Control ECU	Judges the vehicle driving condition based on the signals from each sensor, and sends brake control signals to the brake actuator.
	ABS solenoid relay	Supplies or cuts off power to solenoid valves in the brake actuator.
	ABS motor relay	Supplies or cuts off power to motor in the brake actuator.

6. Brake Booster (with Brake Assist Mechanism)

General

This brake booster consists of the conventional type brake booster to which a brake assist mechanism has been added. During a normal brake operation, the function of the brake booster is the same as that of the conventional type. The major difference in construction between this booster and the conventional type one is that the slide valve and the slide valve hook are added in the air valve in this booster.

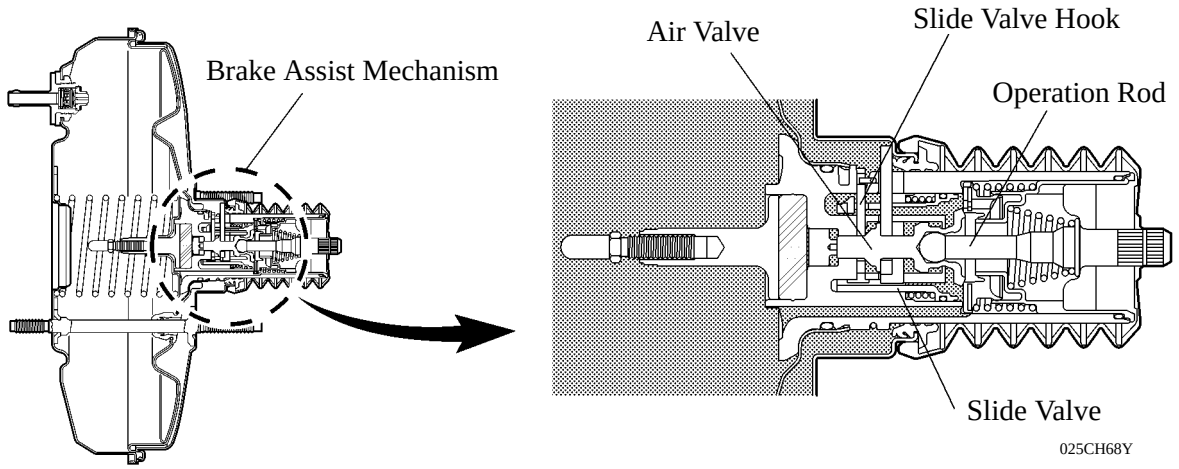

Operation

1) No Braking Condition

When the air valve closes, the pressure in the constant pressure chamber and that in the variable pressure chamber become the same, and the control valve closes.

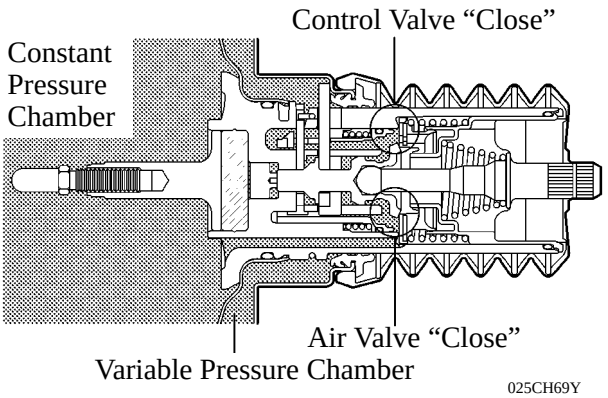

2) Normal Braking Condition (Operation Rod Speed = Power Piston Speed)

During normal braking, the air valve opens and the control valve closes to activate the brake booster function.

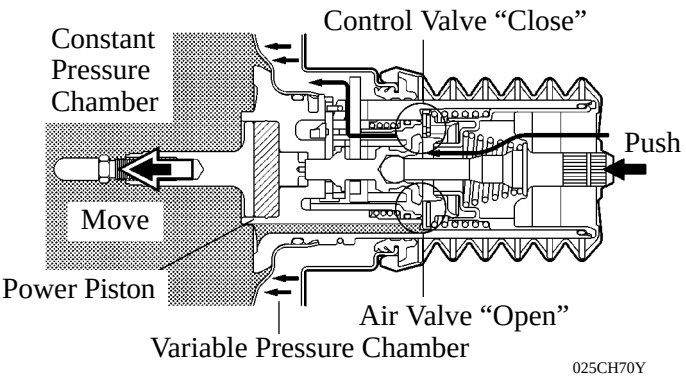

3) Brake Assist Condition (Operation Rod Speed > Power Piston Speed)

When the operation rod speed is faster than the power piston speed, the air valve pushes the slide valve hook. Consequently, the slide valve separates from the slide valve hook, the spring pushes the control valve, and the control valve closes. Thus, the opening of the air valve becomes enlarged and the air volume that is introduced increases. This results in a brake assist force to powerfully push the power piston.

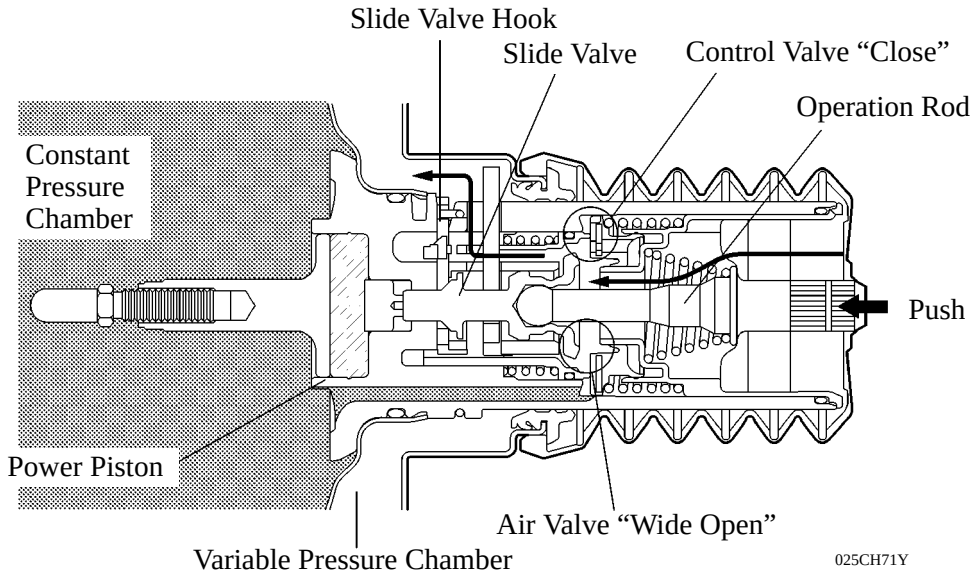

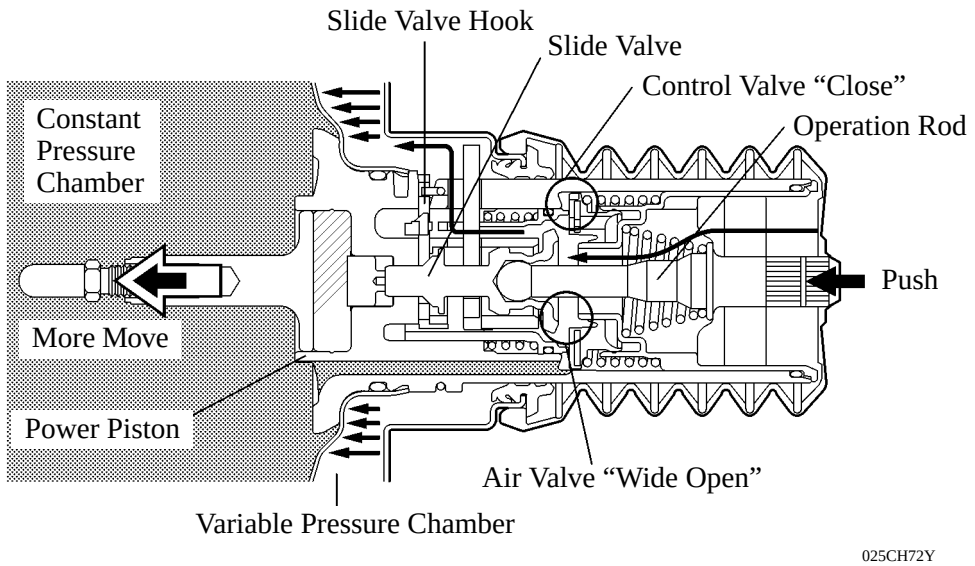

7. Brake Actuator

General

The brake actuator consists of actuator portion, skid control ECU, ABS solenoid relay, and ABS motor relay.

The 2 relays are built in the brake actuator.

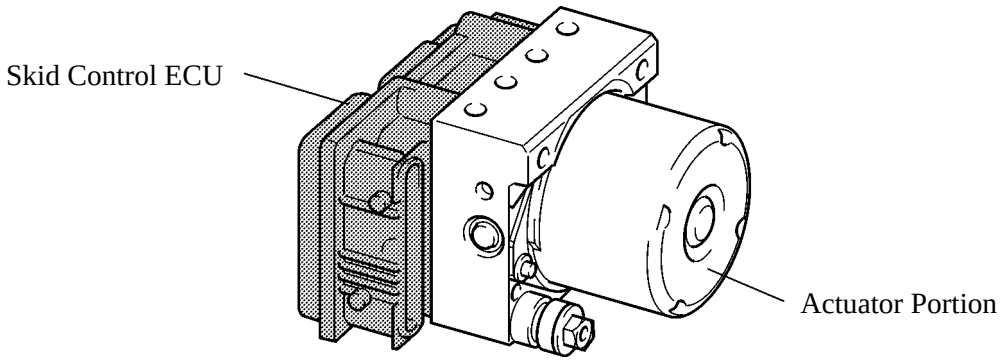

263CH42

Actuator Portion

The actuator portion consists of 8 two-position solenoid valves 1 motor, 2 pumps and 2 reservoirs. The 8 two-solenoid valves consist of 4 pressure holding valves [(1), (2), (3), (4)] and 4 pressure reduction valves [(5), (6), (7), (8)].

▶ Hydraulic Circuit ●

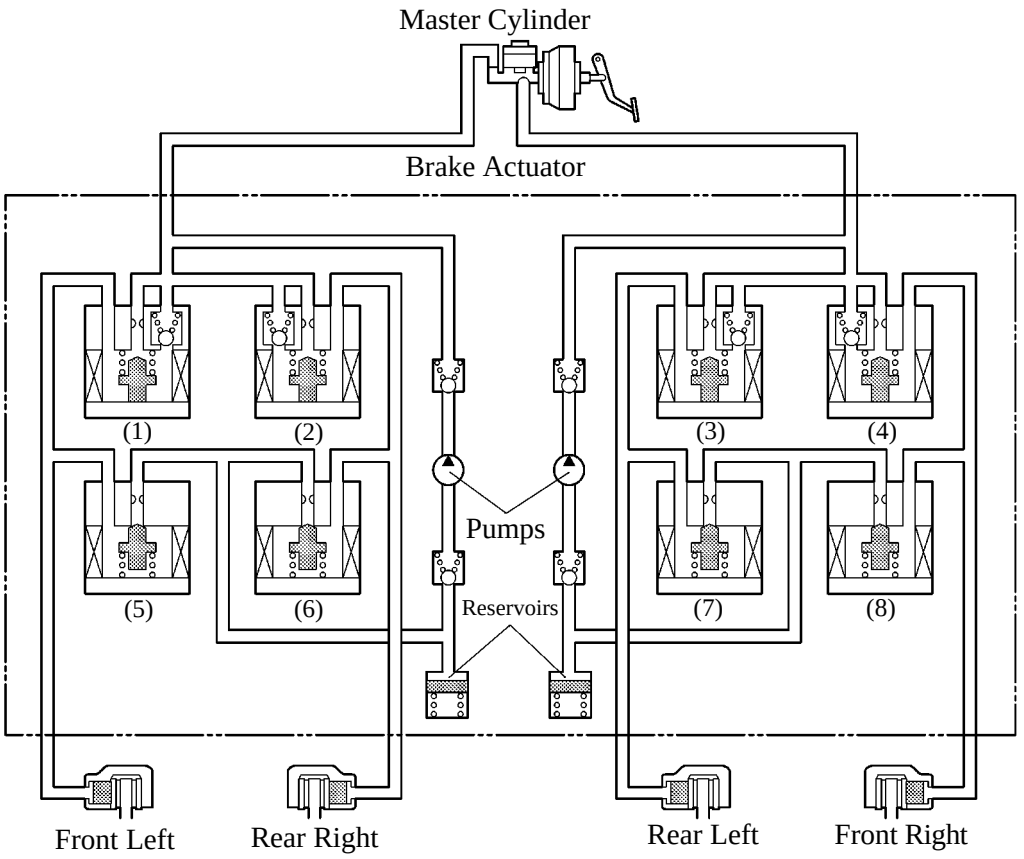

025CH73Y

8. System Operation

ABS with EBD Operation

Based on the signals received from the 4 wheel speed sensors, the skid control ECU calculates each wheel speed and deceleration, and checks wheel slipping conditions. And according to the slipping condition, the skid control ECU controls the pressure holding valve and pressure reduction valve in order to adjust the fluid pressure of the each wheel cylinder in the following 3 modes: pressure reduction, pressure holding, and pressure increase modes.

Not Activated	Normal Braking	—	—
Activated	Increase Mode	Holding Mode	Reduction Mode
Hydraulic Circuit	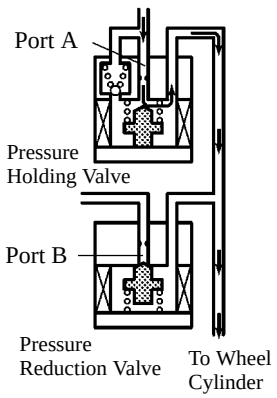	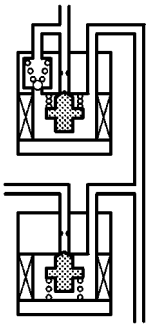	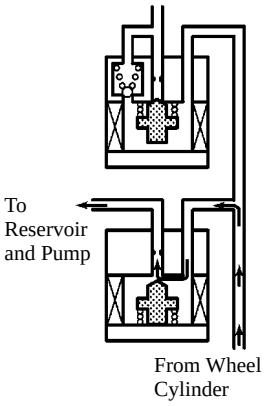
Pressure Holding Valve (Port A)	OFF (Open)	ON (Close)	Δ
Pressure Reduction Valve (Port B)	OFF (Close)	Δ	ON (Open)
Wheel Cylinder Pressure	Increase	Hold	Reduction

Initial Check

After the ignition is turned ON, and the vehicle attains an approximate speed of 15 km/h (9 mph) or more only at first time, the skid control ECU performs the initial check.
The functions of each solenoid valve and pump motor in the brake actuator are checked in order.

9. CAN (Controller Area Network)

CAN communication is used between the skid control ECU, combination meter, main body ECU and DLC3. For details of CAN communication, see page BE-8.

10. Diagnosis

General

If the skid control ECU detects a malfunction in the brake control system (ABS with EBD), the ABS and brake system warning lights that correspond to the function in which the malfunction have been detected indicate or light up to alert the driver of the malfunction as indicated in the table below.

: Light ON —: Light OFF

Item	ABS	EBD	Skid Control ECU
ABS Warning Light			
Brake System Warning Light	—		

At the same time, the DTC (Diagnostic Trouble Code) are stored in the memory. The DTC can be read by connecting the SST (09843-18040) between the Tc and CG terminals of DLC3 and observing the blinks of the ABS warning light, or by connecting a hand-held tester.

This system has a sensor signal check (test mode) function. This function is activated by connecting the SST (09843-18040) between the Ts and CG terminal of the DLC3 or by connecting a hand-held tester.

If the skid control ECU detects a malfunction during a sensor signal check (test mode), it stores the DTC in its memory. These DTC can be read during a sensor check operation by connecting the SST (09843-18040) to the Tc and CG terminals of the DLC3 and observing the blinking of the ABS warning light or a connecting hand-held tester.

Service Tip

The skid control ECU uses the CAN protocol for diagnostic communication. Therefore, a hand-held tester and a dedicated adapter [CAN VIM (Vehicle Interface Module)] are required for accessing diagnostic data. For details, see the 2007 Camry Repair Manual (Pub. No. RM0250U).

Diagnosis of CAN

If a malfunction occurs on a CAN communication line, the skid control ECU is connected to the CAN communication lines and it will store the DTC (Diagnostic Trouble Code) in its memory.

There are 2-digit DTC and 5-digit DTC for CAN communications related to the brake control system (ABS with EBD and brake assist).

- 2-digit DTC can be read by connecting the SST (09843-18040) to Tc and CG terminals of the DLC3, and observing the diagnostic code indicated on the multi-information display in the combination meter.
- 5-digit DTC can be read by connecting a hand-held tester to the DLC3.

Service Tip

The skid control ECU uses the CAN protocol for diagnostic communication. Therefore, a hand-held tester and a dedicated adapter [CAN VIM (Vehicle Interface Module)] are required for accessing diagnostic data. For details, see the 2007 Camry Repair Manual (Pub. No. RM0250U).

Fail-Safe

In the event of a malfunction in the ABS, the skid control ECU prohibits the ABS operation.

In the event of a malfunction in EBD control, the skid control ECU prohibits EBD control. Thus, the brake will be operated in the same condition as the system without the ABS with EBD.

▶BRAKE CONTROL SYSTEM (ABS with EBD, Brake Assist, TRAC and VSC)

1. General

The brake control system (ABS with EBD, brake assist, TRAC and VSC) of ’07 Camry has the following functions:

Function	Outline
ABS (Anti-lock Brake System)	The ABS helps prevent the wheels from locking when the brakes are applied firmly or when braking on a slippery surface.
EBD (Electronic Brake force Distribution)	The EBD control utilizes ABS, realizing the proper brake force distribution between front and rear wheels in accordance with the driving conditions. In addition, during cornering braking, it also controls the brake forces of right and left wheels, helping to maintain the vehicle behavior.
Brake Assist (Electrical Type)	The primary purpose of the brake assist is to provide an auxiliary brake force to assist the driver who cannot generate a large brake force during emergency braking, thus helping draw the vehicle’s brake performance.
TRAC (Traction Control)	The TRAC system helps prevent the drive wheels from slipping if the driver presses the accelerator pedal excessively when starting off or accelerating on a slippery surface.
VSC (Vehicle Stability Control)	The VSC system helps prevent the vehicle from slipping sideways as a result of strong front wheel skid or strong rear wheel skid during cornering.

Service Tip

When brake control system is activated, the brake pedal could shudder, which is a normal occurrence of the system in operation and should not be considered a malfunction.

2. System Diagram

▶ TMC Models ●

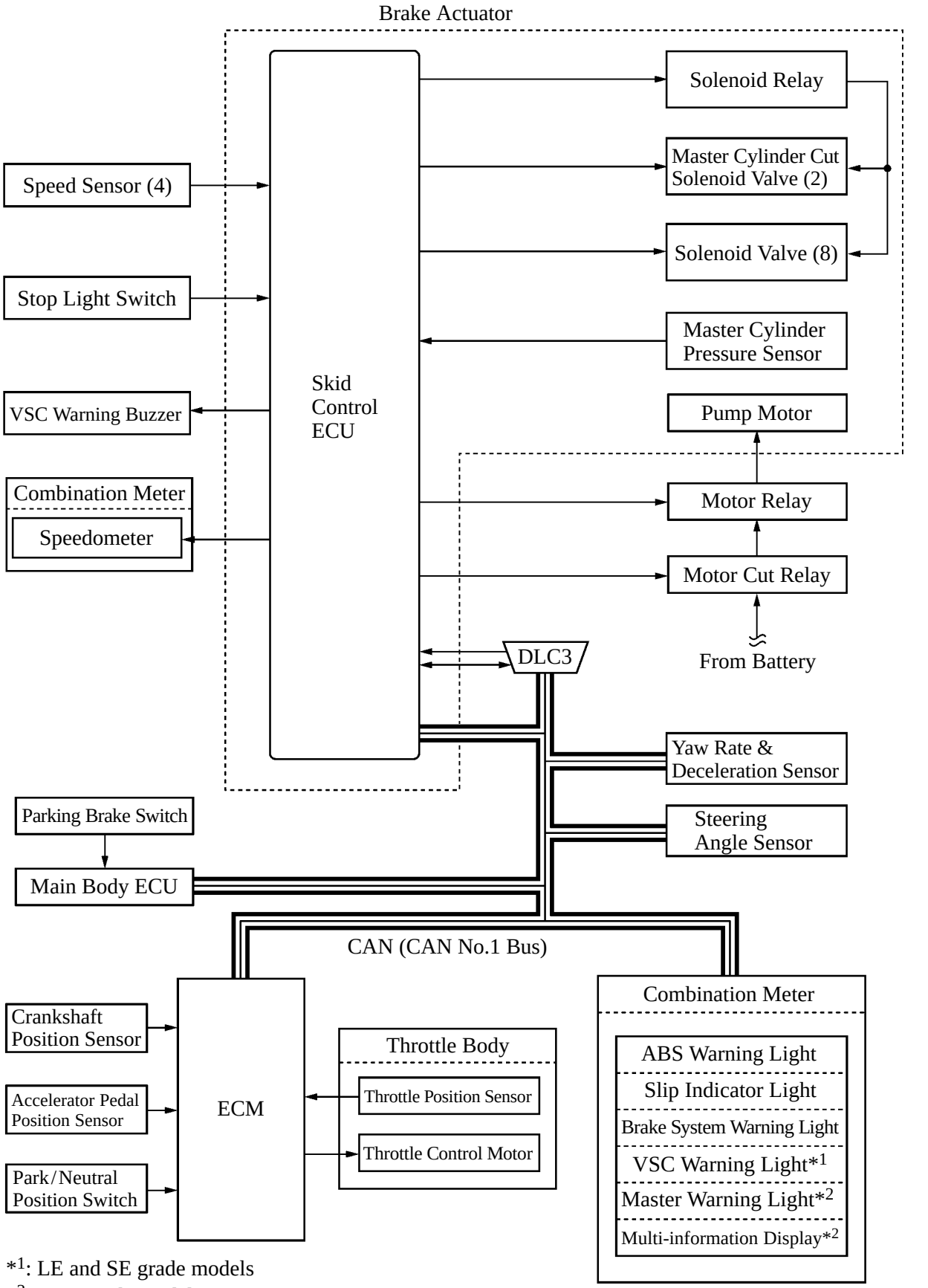

*1: LE and SE grade models
*2: XLE grade models

025CH39P

▶ **TMMK Model ●**

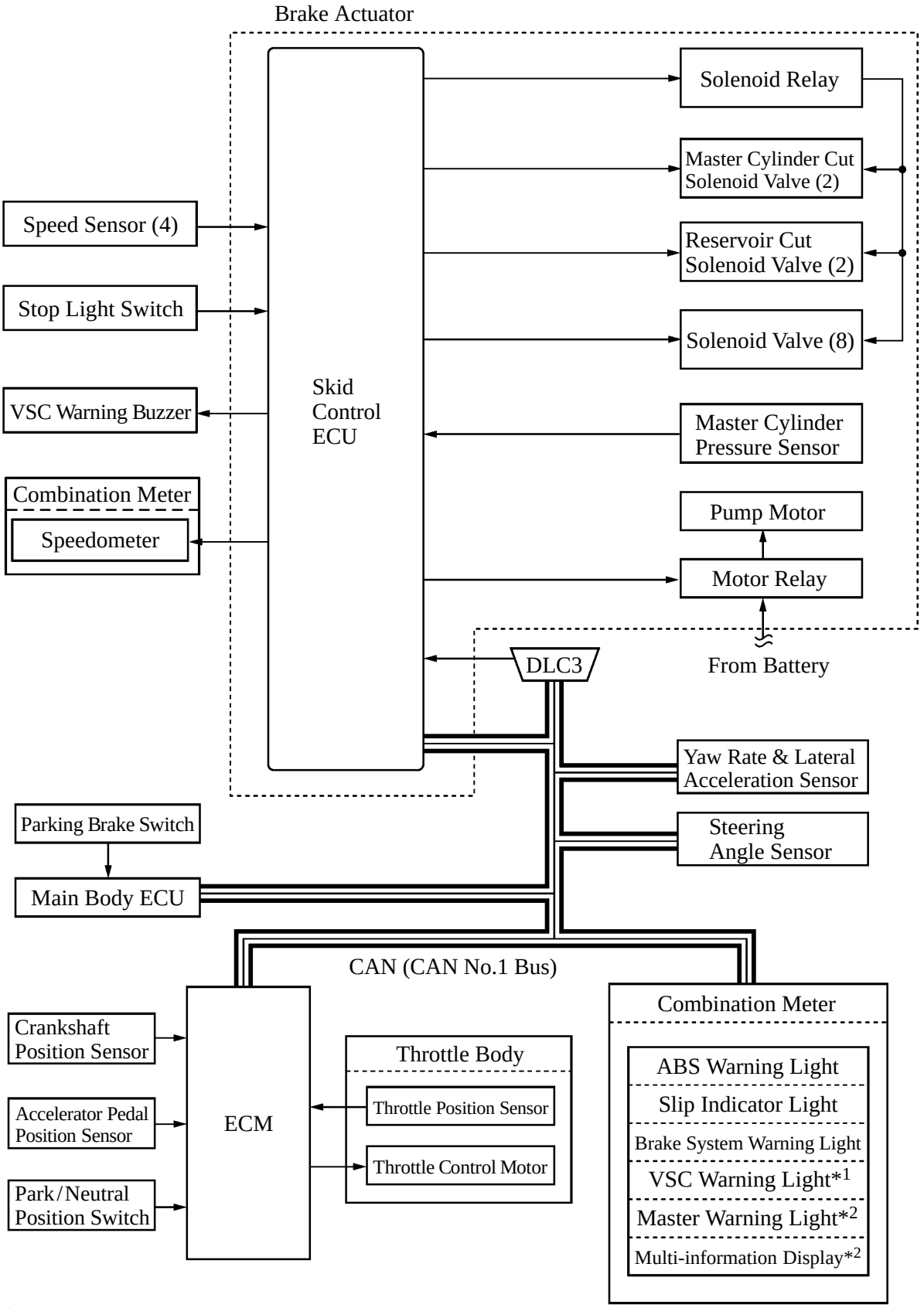

*1: LE and SE grade models
*2: XLE grade models

025CH40P

3. Outline of EBD Control Function

The detailed outline is the same as that of brake control system (ABS with EBD). For details, see page CH-94.

4. Outline of Brake Assist System

The brake assist system in combination with ABS helping improves the vehicle's brake performance.

The brake assist system interprets a quick push of the brake pedal as emergency braking and supplements the brake power applied if the driver has not stepped hard enough on the brake pedal. In emergencies, driver, especially inexperienced ones, often panic and do not apply sufficient pressure on the brake pedal.

A key feature of brake assist system is that the timing and the degree of braking assistance are designed to help ensure that the driver does not discern anything unusual about the braking operation. When the driver intentionally eases up on the brake pedal, the system reduces the amount of assistance it provides.

Based on the signals from the master cylinder pressure sensor, the skid control ECU calculates the speed and the amount of the brake pedal application and then determines the intention of the driver to make an emergency braking. If the skid control ECU determines that the driver intends the emergency braking, the system activates the brake actuator to increase the brake fluid pressure, which increases the braking force.

▶ In case that the driver's depressing force is small when applying emergency braking ●

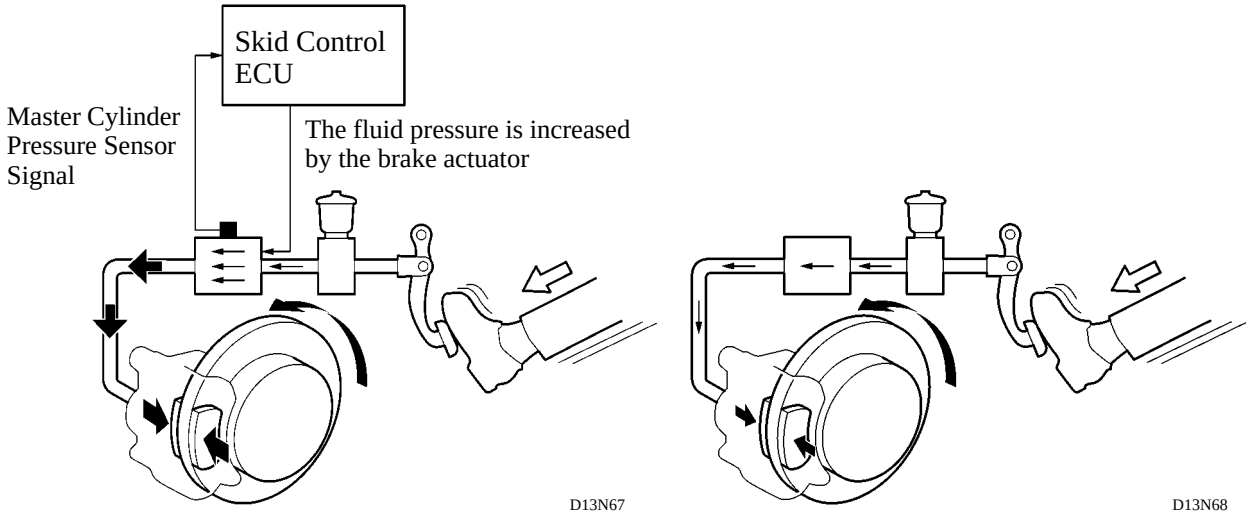

With Brake Assist System **Without Brake Assist System***

*: The basic performance of the brake is the same as of the model with the brake assist

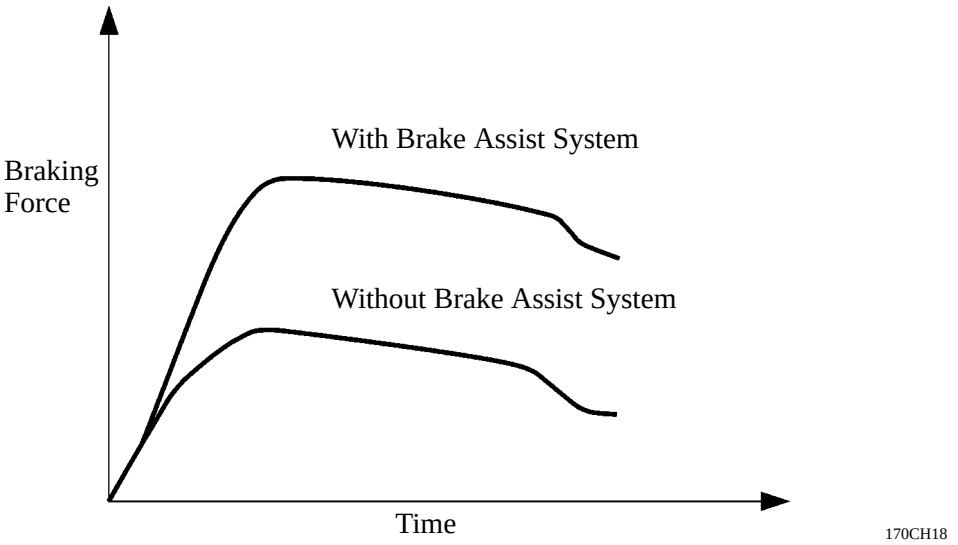

5. Outline of TRAC Function

If the driver presses the accelerator pedal aggressively when initially acceleration or when accelerating on a slippery surface, the drive wheels could slip due to the excessive amount of torque that is generated. By applying hydraulic brake control to the drive wheels and regulating the throttle to control the engine output, the TRAC helps minimize the slippage of the drive wheels, thus generating the drive force that is appropriate for the road surface conditions.

For example, a comparison may be made between two vehicles, one with the TRAC function and the other without. If the driver of each vehicle operates the accelerator pedal in a rough manner while driving over a surface with different surface friction characteristics, the drive wheel on the slippery surface could slip as illustrated. As a result, the vehicle could become unstable.

However, when the vehicle is equipped with the TRAC function, the skid control ECU instantly determines the state of the vehicle and operates the brake actuator in order to apply the brake of the slipping drive wheel. Furthermore, the ECM receives the signals from the skid control ECU and regulates the throttle in order to control the engine output. Thus, this function can constantly maintain a stable vehicle posture.

▶ **Driving condition on road with different surface friction characteristics ●**

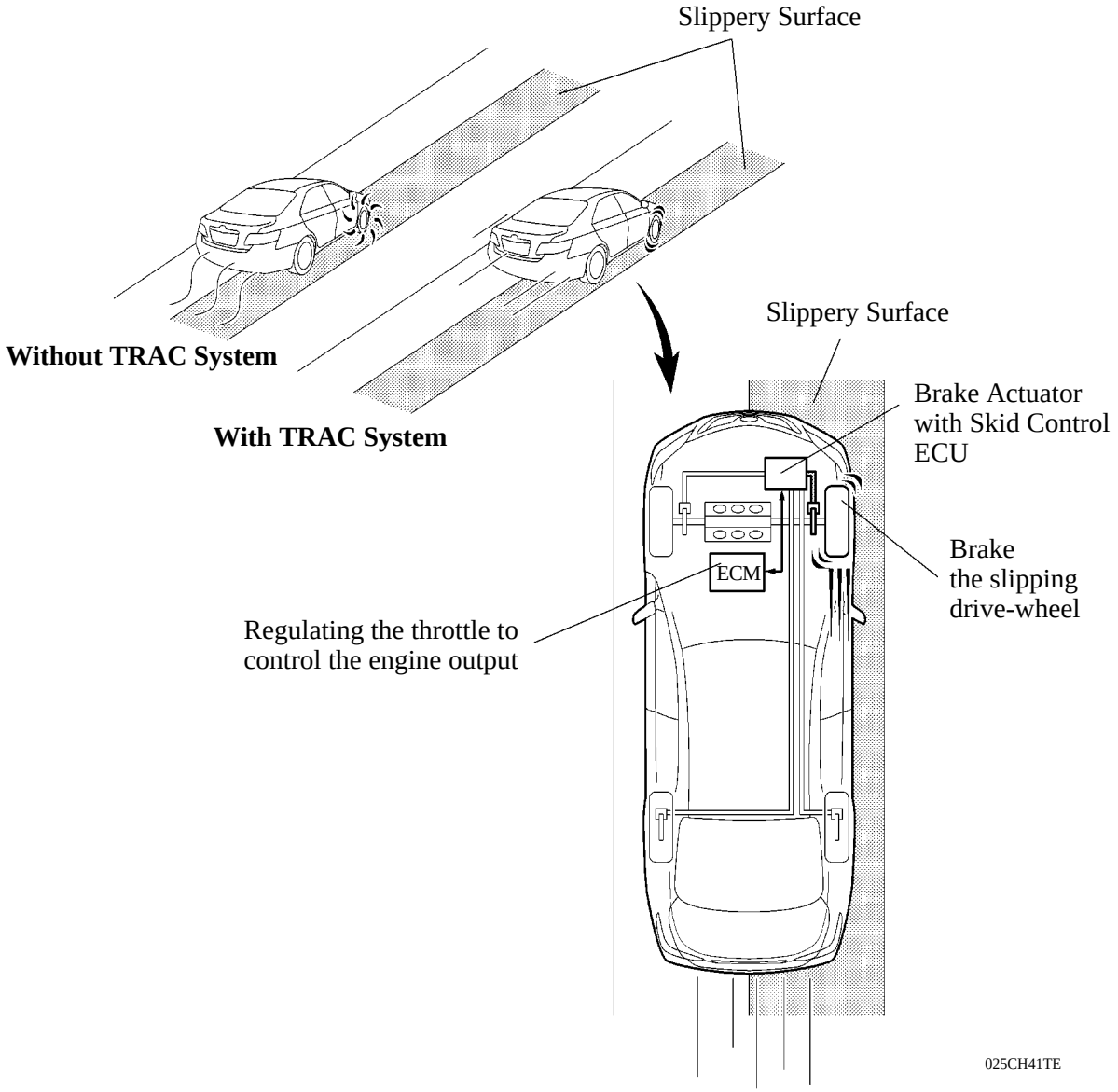

6. Outline of VSC Function

General

The followings are two examples that can be considered as circumstances in which the tires exceed their lateral grip limit.
The VSC function is designed to help control the vehicle behavior by controlling the motive force and the brakes at each wheel when the vehicle is under one of the conditions indicated below.

▶When the front wheels lose grip in relation to the rear wheels (front wheel skid tendency).

▶When the rear wheels lose grip in relation to the front wheels (rear wheel skid tendency).

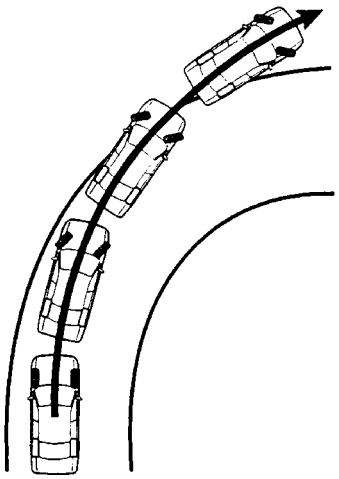

151CH17

Front Wheel Skid Tendency

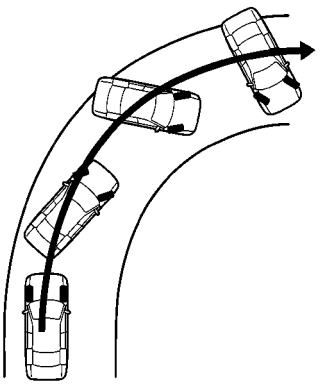

189CH100

Rear Wheel Skid Tendency

Method for Determining the Vehicle Condition

To determine the condition of the vehicle, sensors detect the steering angle, vehicle speed, vehicle's yaw rate, and the vehicle's lateral acceleration, which are then calculated by the skid control ECU.

1) Determining Front Wheel Skid

Whether or not the vehicle is in the state of front wheel skid is determined by the difference between the target yaw rate and the vehicle's actual yaw rate.
When the vehicle's actual yaw rate is smaller than the yaw rate (a target yaw rate that is determined by the vehicle speed and steering angle) that should be rightfully generated when the driver operates the steering wheel, it means the vehicle is making a turn at a greater angle than the locus of travel.
Thus, the skid control ECU determines that there is a large tendency to front wheel skid.

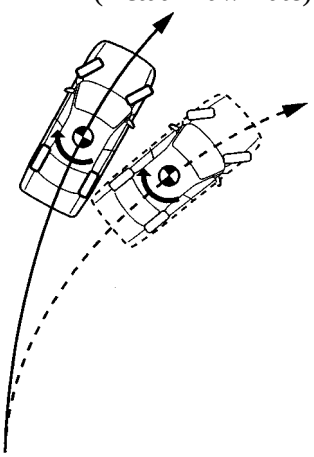

151CH19

2) Determining Rear Wheel Skid

Whether or not the vehicle is in the state of rear wheel skid is determined by the values of the vehicle's slip angle and the vehicle's slip angular velocity (time-dependent changes in the vehicle's slip angle). When the vehicle's slip angle is large, and the slip angular velocity is also large, the skid control ECU determines that the vehicle has a large rear wheel skid tendency.

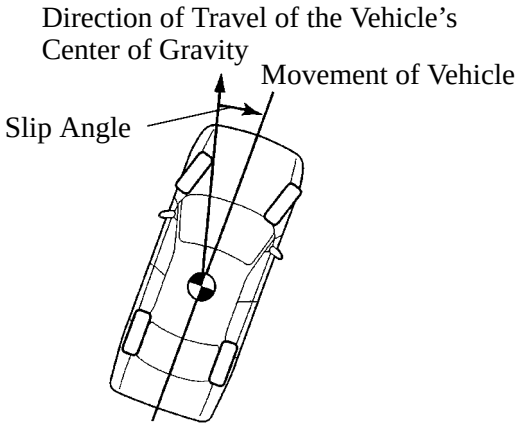

151CH18

Method for VSC Operation

When the Skid Control ECU determines that the vehicle exhibits a tendency to front wheel skid or rear wheel skid, it decreases the engine output and applies the brake of a front or rear wheel to control the vehicle's yaw moment.
The basic operation of the VSC is described below. However, the control method differs depending on the vehicle's characteristics and driving conditions.

1) Dampening a Strong Front Wheel Skid

When the skid control ECU determines that there is a large front wheel skid tendency, it counteracts in accordance with the extent of that tendency. The skid control ECU controls the engine output and applies the brakes of the front wheels and rear wheel of the inner circle of the turn in order to help restrain the front wheel skid tendency.

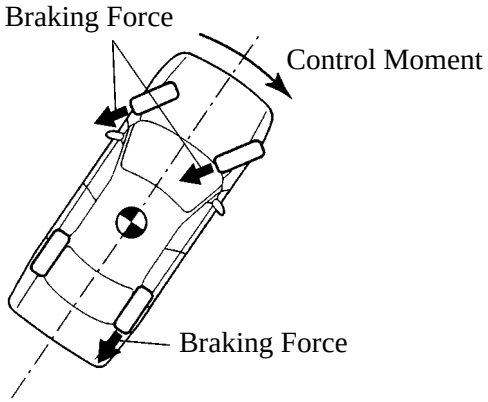

Making a Right Turn

161ES30

2) Dampening a Strong Rear Wheel Skid

When the skid control ECU determines that there is a large rear wheel skid tendency, it counteracts in accordance with the extent of that tendency. It applies the brakes of the front wheel of the outer circle of the turn, and generates an outward moment of inertia in the vehicle, in order to restrain the rear wheel skid tendency. Along with the reduction in the vehicle speed caused by the braking force, the excellent vehicle's stability is ensured.
In some cases, the skid control ECU applies the brake of the rear wheels, as necessary.

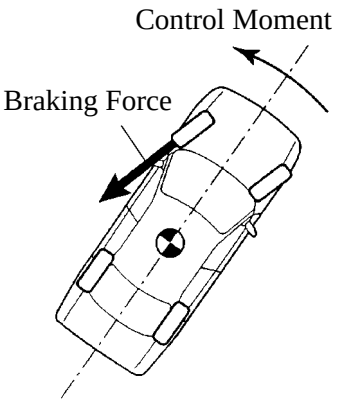

Making a Right Turn

204CH15

7. Layout of Main Components

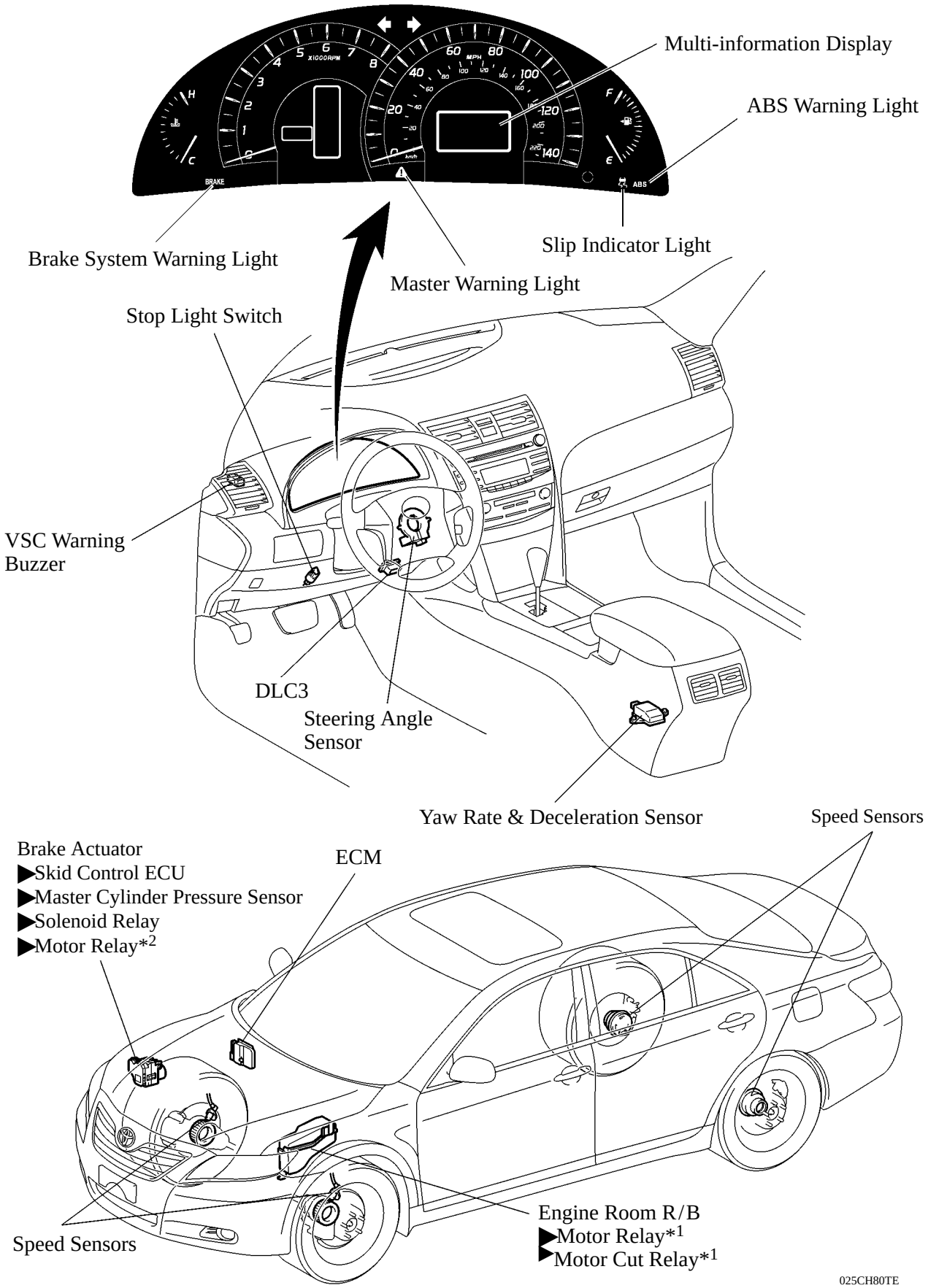

*1: Only for TMC made models
*2: Only for TMMK made models

XLE Grade Models

8. Function of Main Components

Component		Function
Combination Meter	ABS Warning Light	Lights up to alert the driver when the skid control ECU detects the malfunction in the ABS, EBD or Brake Assist system.
	Slip Indicator Light	▶ Blinks to inform the driver when the TRAC system or the VSC system is operated.
	Brake System Warning Light	▶ Lights up together with ABS warning light to alert the driver when the skid control ECU detects the malfunction in the EBD control. ▶ Lights up to inform the driver when the parking brake is ON or the brake fluid level is low.
	VSC Warning Light*1	Lights up to alert the driver when the skid control ECU detects the malfunction in the TRAC or VSC system.
	Master Warning Light*2	Lights up to alert the driver when the skid control ECU detects the malfunction in the TRAC or VSC system.
	Multi-information Display*2	Displays a warning massage “CHECK VSC” to alert the driver when the skid control ECU detects a malfunction in the TRAC or VSC system.
ECM		▶ Sends the throttle valve angle signal, accelerator pedal position signal, engine speed signal, and shift lever position signal to the skid control ECU. ▶ Receives the signal of throttle control request from the skid control ECU.
Parking Brake Switch		Detects when the parking brake lever is pulled up.
Speed Sensors		Detects the wheel speed of each 4 wheels.
Stop Light Switch		Detects the brake pedal depressing signal.
Brake Actuator		Changes the fluid path based on the signals from the skid control ECU during the operation of the ABS with EBD & brake assist & TRAC & VSC system, in order to control the fluid pressure that is applied to the wheel cylinders.
	Master Cylinder Pressure Sensor	Assembled in the brake actuator and detects the master cylinder pressure.
	Skid Control ECU	Judges the vehicle driving condition based on signals from each sensor, and sends brake control signal to the brake actuator.
	Solenoid Relay	Supply power to the solenoid valves.
	Motor Relay*4	Supply power to the pump motor in the brake actuator.
VSC Warning Buzzer		Emits an intermittent sound to inform the driver that the skid control ECU detects the strong front skid tendency or strong rear skid tendency.
Yaw Rate & Deceleration Sensor*3		▶ Detects the vehicle’s yaw rate. ▶ Detects the vehicle’s longitudinal and lateral acceleration.
Yaw Rate & Lateral Acceleration Sensor*4		▶ Detects the vehicle’s yaw rate. ▶ Detects the vehicle’s lateral acceleration.
Steering Angle Sensor		Detects the steering direction and angle of the steering wheel.
Motor Relay*3		Supply power to the pump motor in the brake actuator.
Motor Cut Relay*3		Cut the power to the pump motor in the brake actuator.

*1: LE and SE grade models
*2: XLE grade models
*3: Only for TMC made models
*4: Only for TMMK made models

9. Brake Actuator

The brake actuator consists of the actuator portion, skid control ECU, relays.

The TMC made models brake actuator consists of 10 solenoid valves, 1 pump motor, 2 pumps, 2 pressure regulator valves, 2 reservoirs and 1 master cylinder pressure sensor.

The TMMK made models brake actuator consists of 12 solenoid valves, 1 pump motor, 2 pumps, 2 reservoirs and 1 master cylinder pressure sensor.

▶ Hydraulic Circuit (TMC Made Models) ●

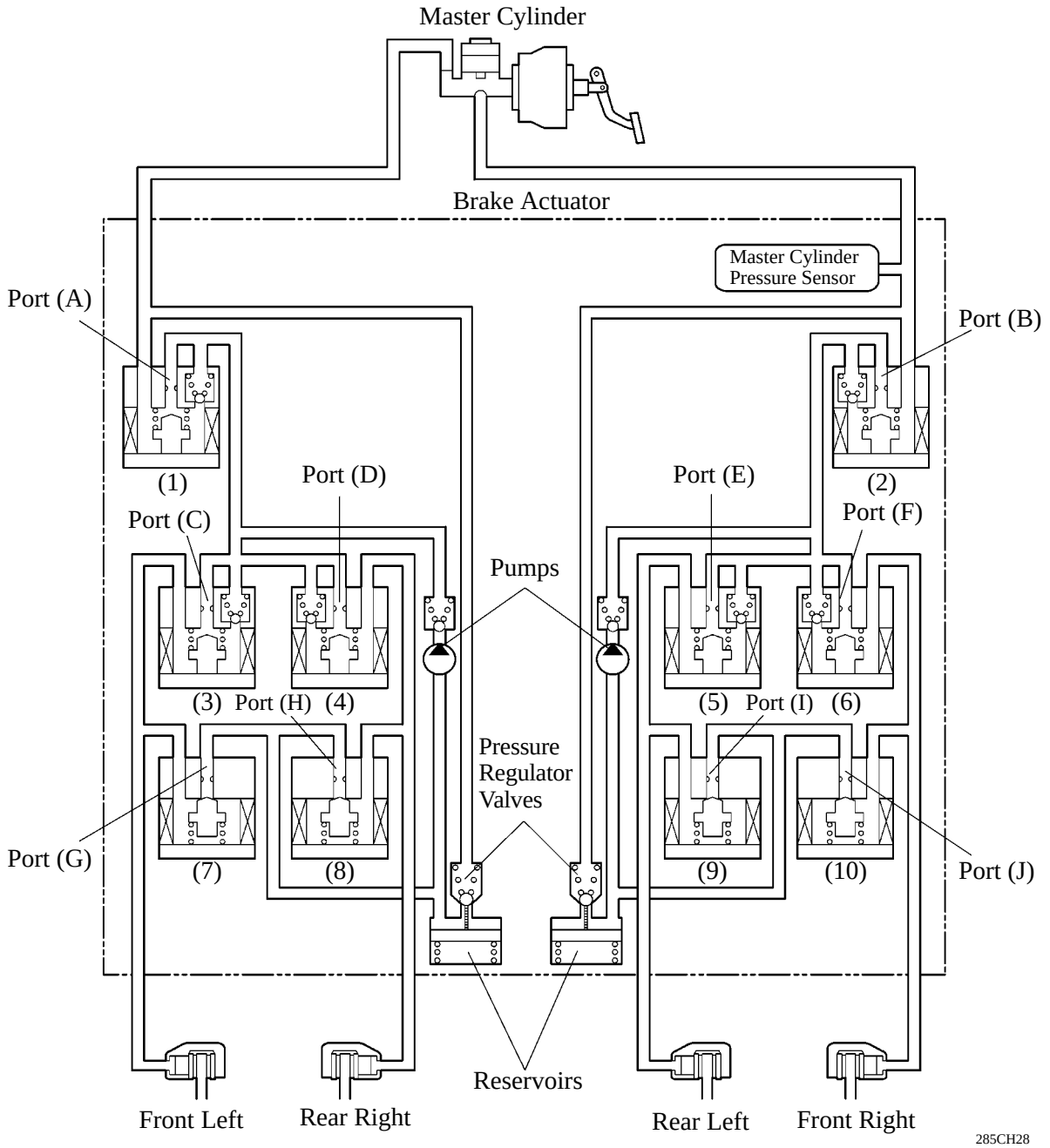

Component	
(1), (2)	Master Cylinder Cut Solenoid Valve
(3), (4), (5), (6)	Pressure Holding Valve
(7), (8), (9), (10)	Pressure Reduction Valve

▶ Hydraulic Circuit (TMMK Made Models) ●

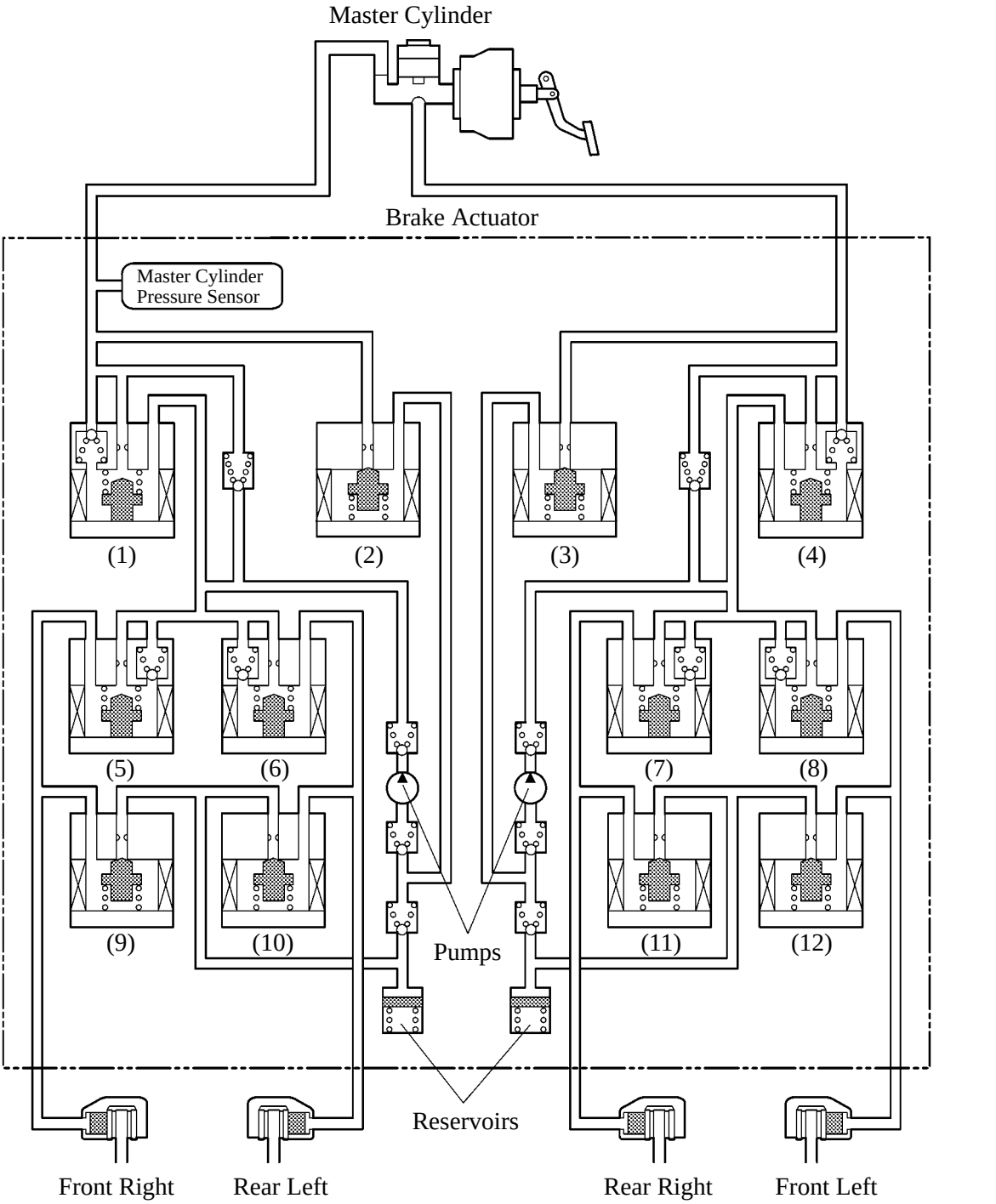

Component	
(1), (4)	Master Cylinder Cut Solenoid Valve
(2), (3)	Reservoir Cur Solenoid Valve
(5), (6), (7), (8)	Pressure Holding Valve
(9), (10), (11), (12)	Pressure Reduction Valve

10. System Operation

Normal Braking Operation

During normal braking, all solenoid valves are remained OFF.

▶ Hydraulic Circuit (TMC Made Models) ●

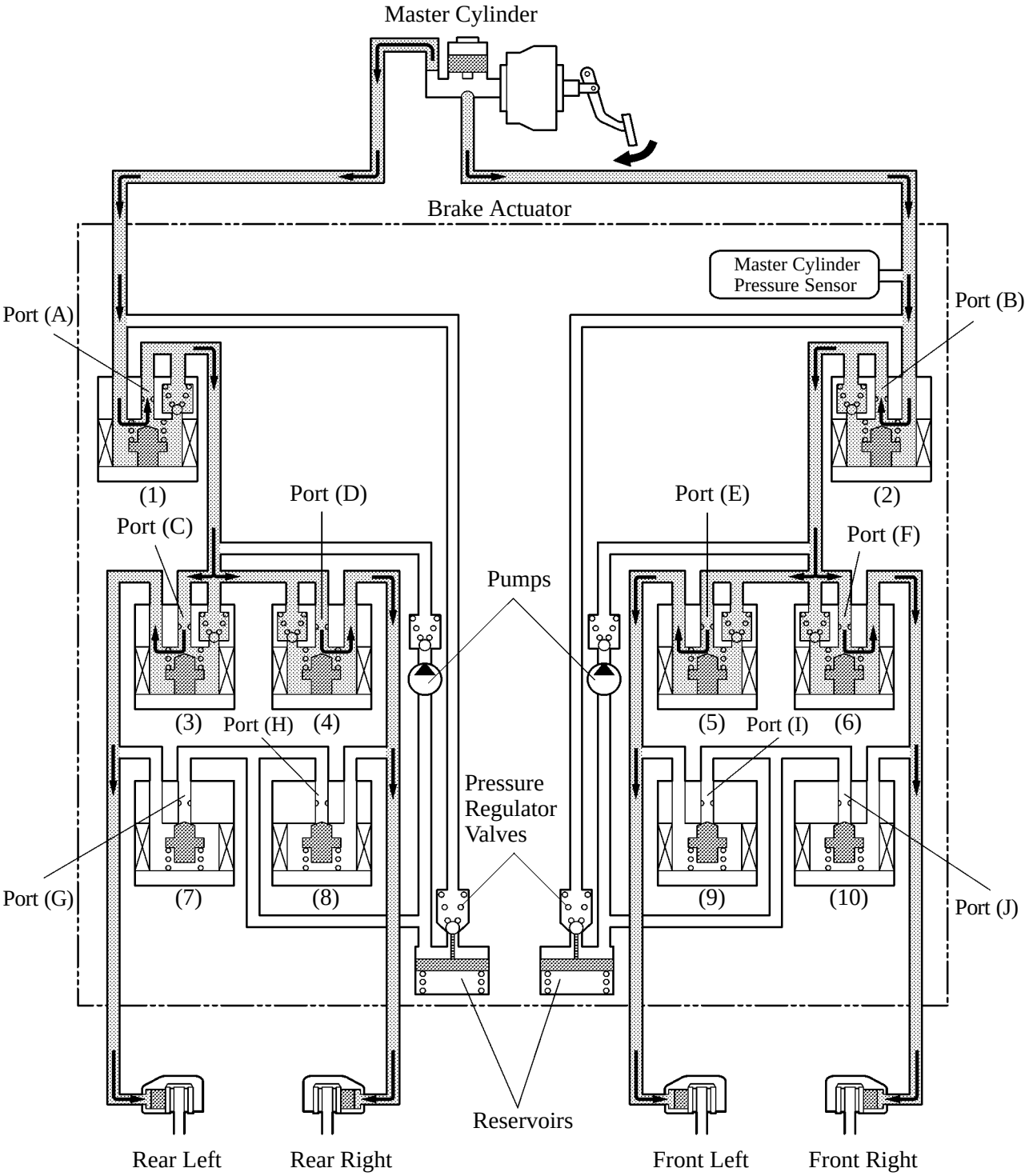

285CH29

▶ Hydraulic Circuit (TMMK Made Models) ●

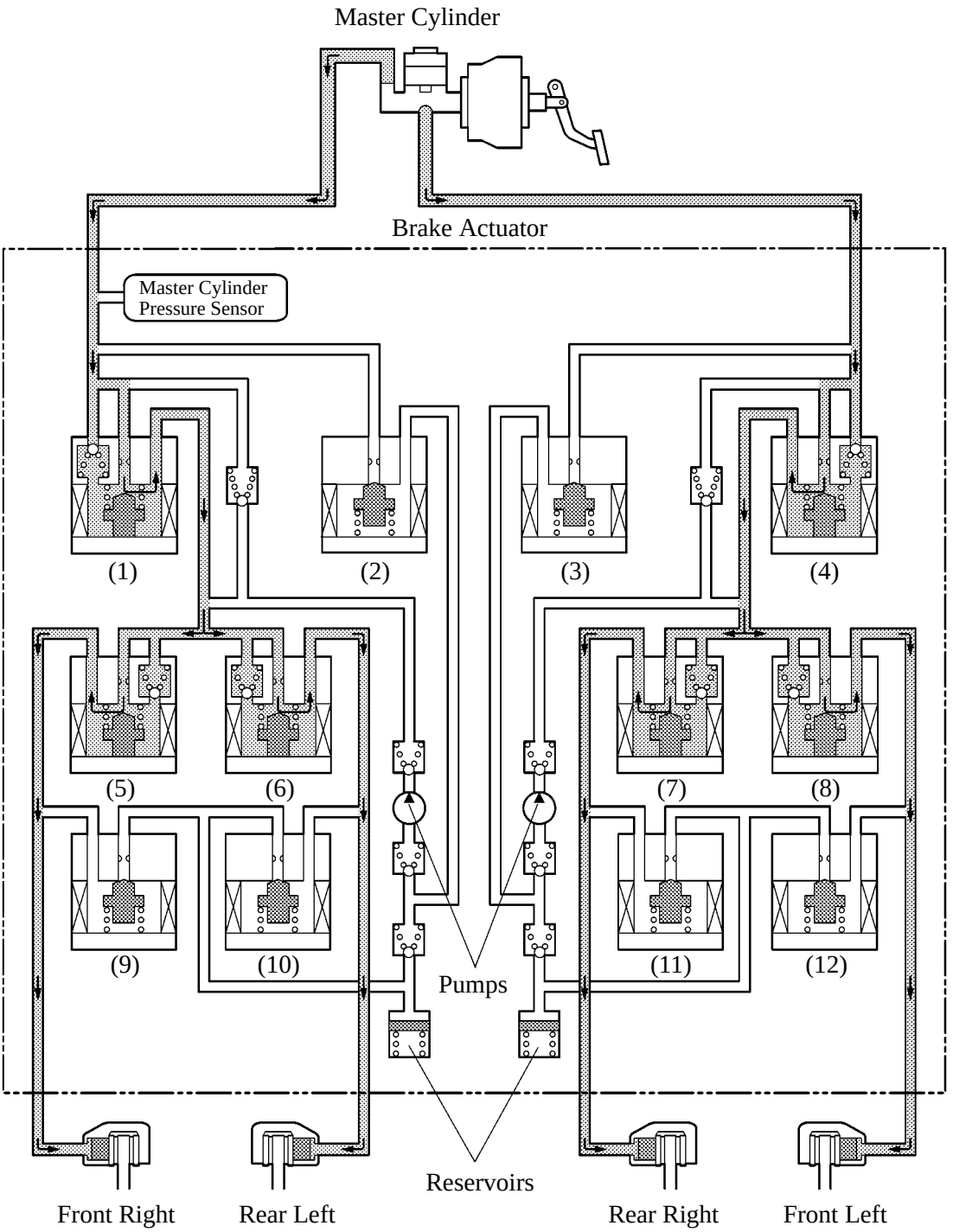

025CH75Y

ABS with EBD Operation

Based on the signals received from the 4 wheel speed sensors and yaw rate & deceleration sensor, the skid control ECU calculates each wheel speed and deceleration, and checks wheel slipping condition. According to the slipping condition, the ECU controls the pressure holding solenoid valve and pressure reduction solenoid valve in order to adjust the fluid pressure of each wheel cylinder in the following three modes: pressure reduction, pressure holding, and pressure increase modes.

Not Activated	Normal Braking	—	—
Activated	Pressure Increase Mode	Pressure Holding Mode	Pressure Reduction Mode
Hydraulic Circuit	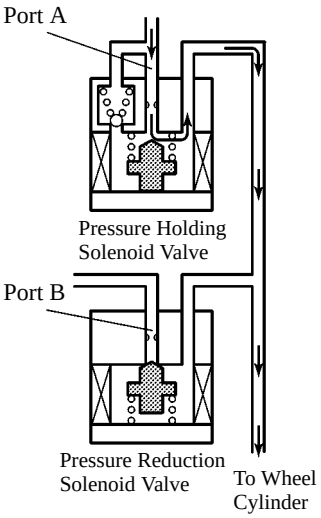	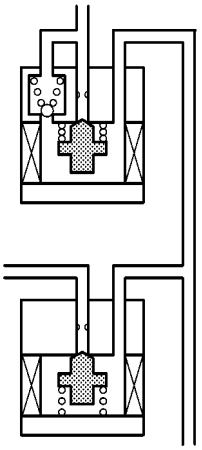	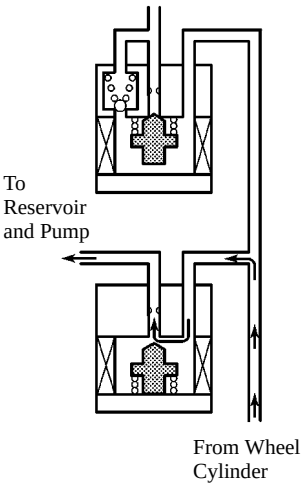
Pressure Holding Valve (Port A)	OFF/Open	ON/Close	ON/Close
Pressure Reduction Valve (Port B)	OFF/Close	OFF/Close	ON/Open
Pressure	Increase	Hold	Reduce

Brake Assist Operation

In the event of emergency braking, the skid control ECU detects the driver's intention based on the speed of the pressure increase in the master cylinder determined by the pressure sensor signal. If the ECU judges the need for the additional brake assist, the fluid pressure is generated by the pump in the actuator and directed to the wheel cylinder to apply a greater fluid pressure than the master cylinder.
Also in the following cases, the skid control ECU provides brake assist.

The brake assist system is activated, each solenoid operates as shown in the table on the next page.

▶ System Diagram (TMC Made Models) ●

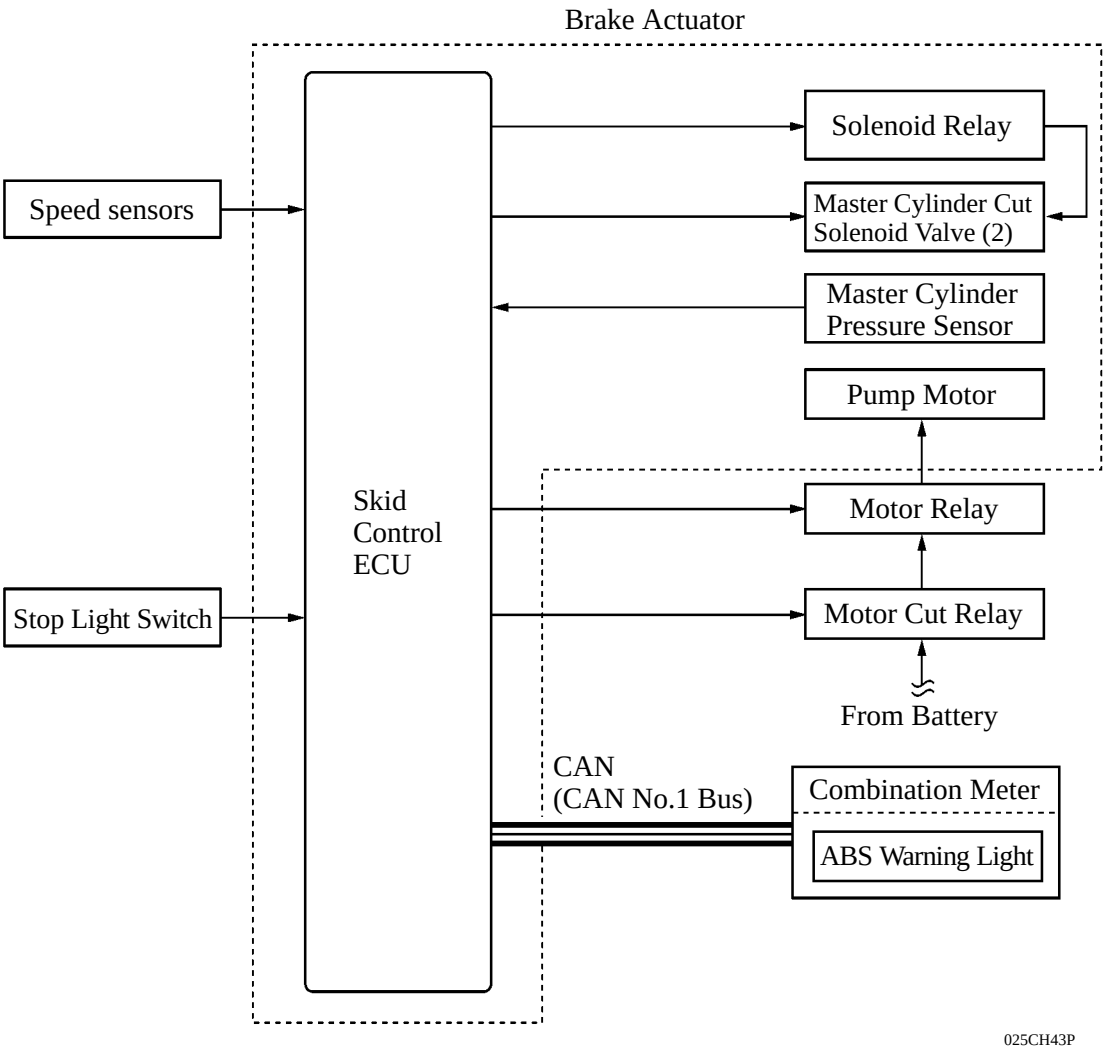

▶ **System Diagram (TMMK Made Models)** ●

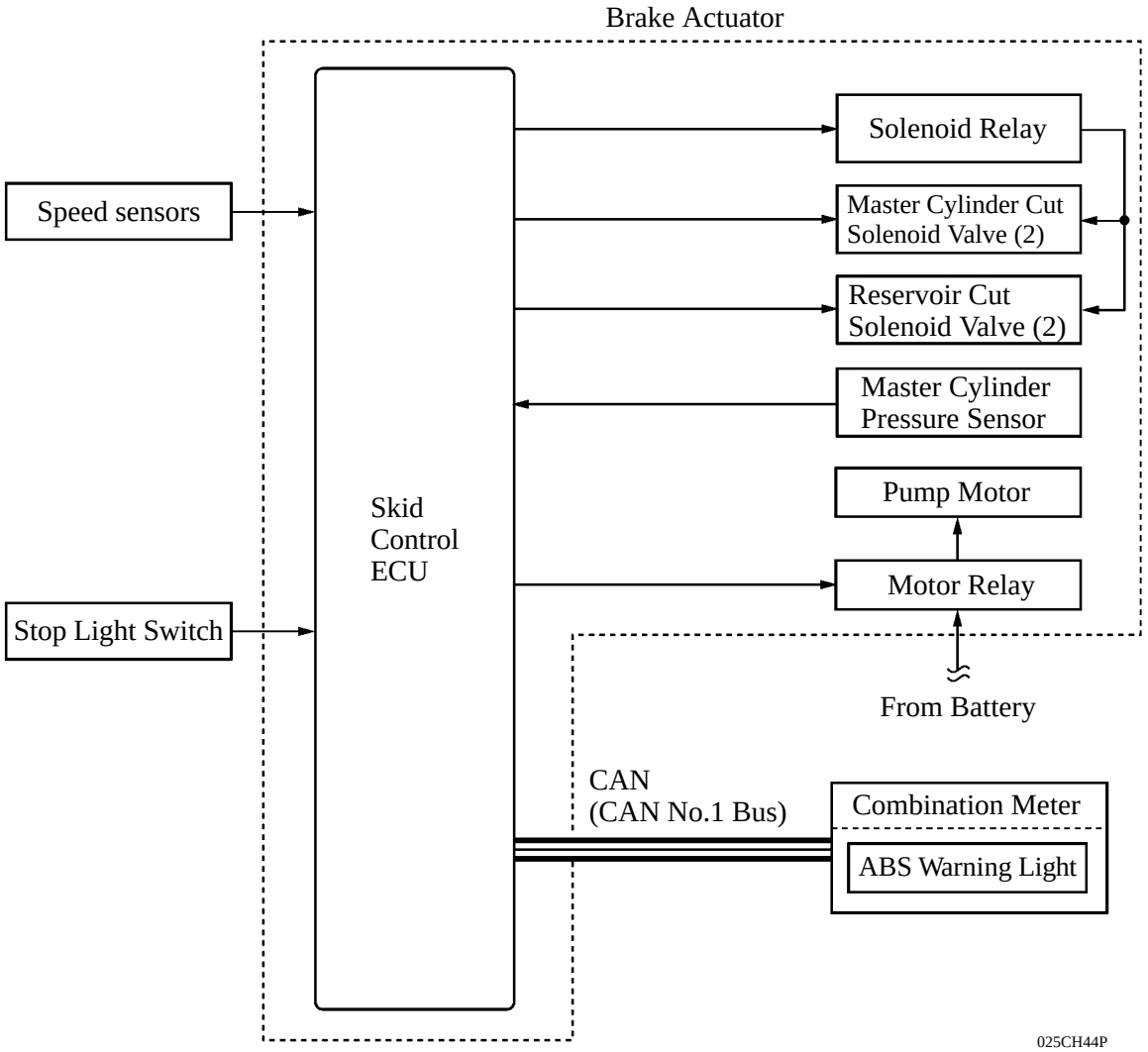

▶ Pressure Increase Mode (TMC Made Models) ●

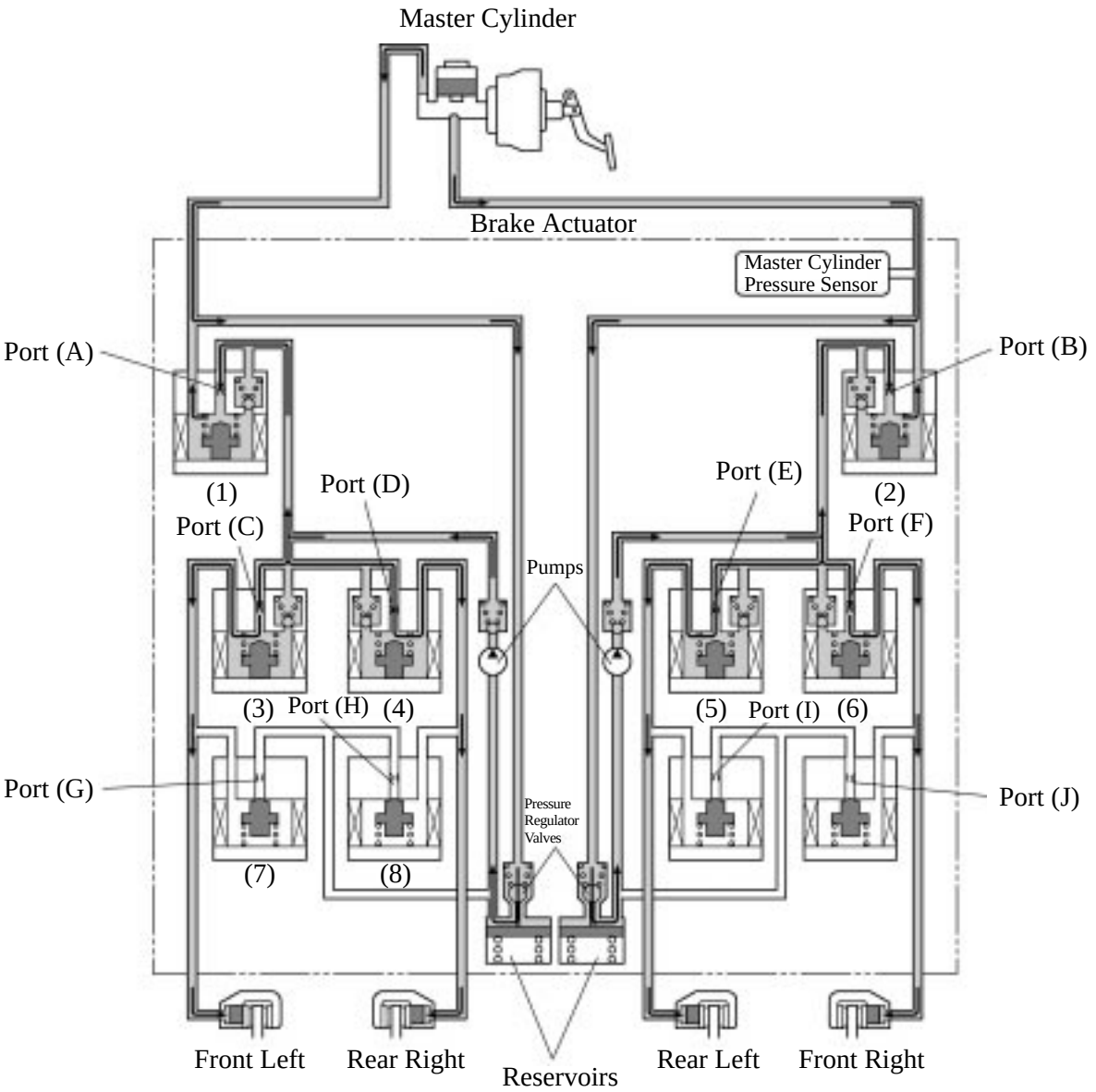

Brake Assist Activated

259ESI08

Item		Brake Assist Not Activated	Brake Assist Activated
(1), (2)	Master Cylinder Cut Solenoid Valve	OFF/Open	ON*
	Port: (A), (B)		
(3), (4), (5), (6)	Pressure Holding Solenoid Valve	OFF/Open	Δ
	Port: (C), (D), (E), (F)		
(7), (8), (9), (10)	Pressure Reduction Solenoid Valve	OFF/Close	Δ
	Port: (G), (H), (I), (J)		

*: The solenoid valve controls the hydraulic pressure between “open” and “close” according to the operating condition by adjusting continually.

▶ **Pressure Increase Mode (TMMK Made Models)** ●

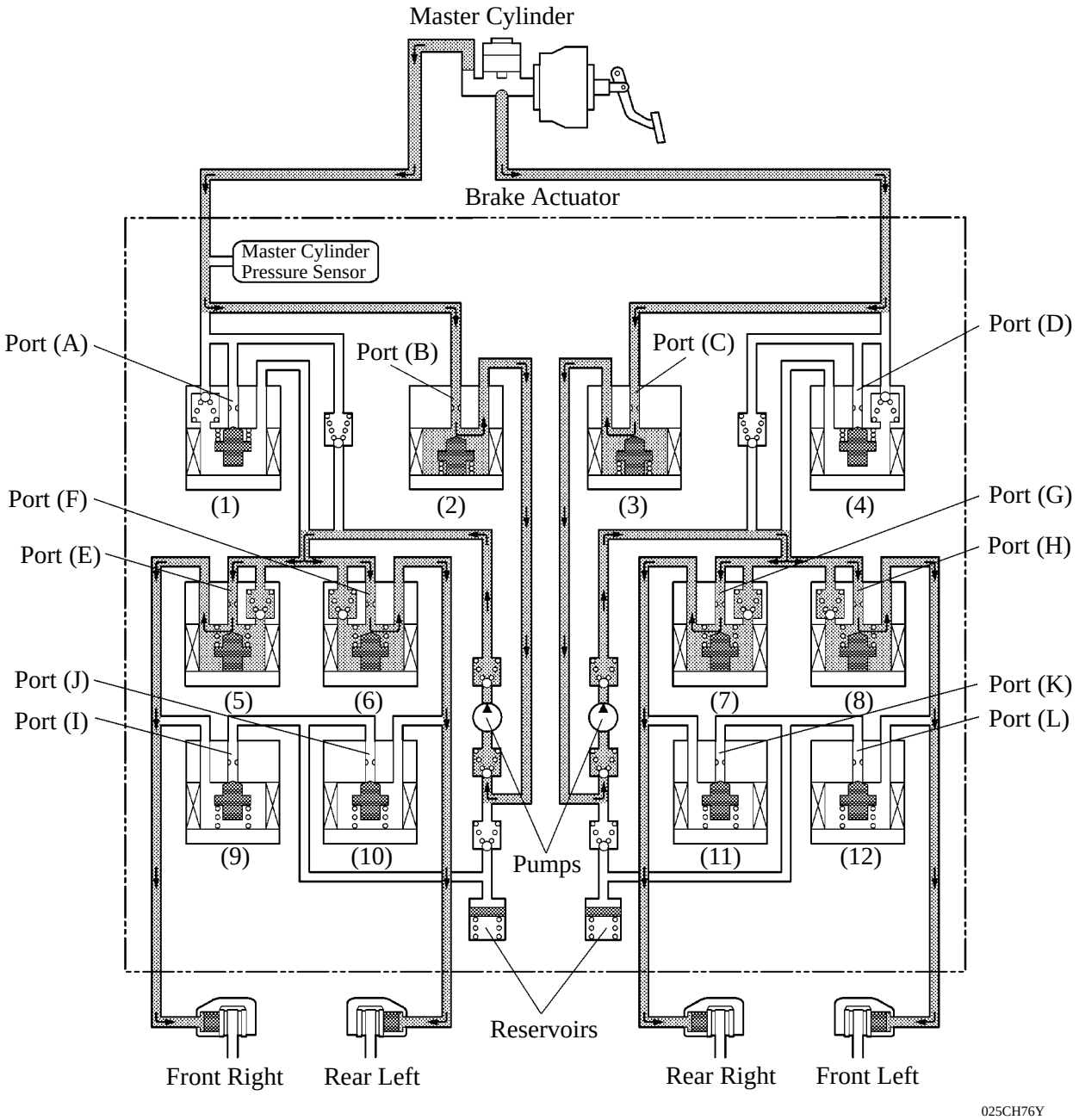

Brake Assist Activated

Item		Brake Assist Not Activated	Brake Assist Activated
(1), (4)	Master Cylinder Cut Solenoid Valve	OFF/Open	ON/Close
	Port: (A), (D)		
(2), (3)	Reservoir Cut Solenoid Valve	OFF/Close	ON/Open
	Port: (B), (C)		
(5), (6), (7), (8)	Pressure Holding Valve	OFF/Open	Δ
	Port: (E), (F), (G), (H)		
(9), (10), (11), (12)	Pressure Reduction Valve	OFF/Close	Δ
	Port: (I), (J), (K), (L)		

TRAC Operation

The fluid pressure generated by the pump is regulated by the master cylinder cut solenoid valve to the required pressure. Thus, the wheel cylinders of the drive wheels are controlled in the following 3 modes: pressure reduction, pressure holding, and pressure increase modes, to control the slippage of the drive wheels.

The diagram below shows the hydraulic circuit in the pressure increase mode when the TRAC is activated.

The pressure holding solenoid valve and the pressure reduction solenoid valve are turned ON/OFF according to the ABS operation pattern described on the previous page.

The TRAC is activated, each solenoid operates as shown in the table on the next page.

▶ System Diagram (TMC Made Models) ◀

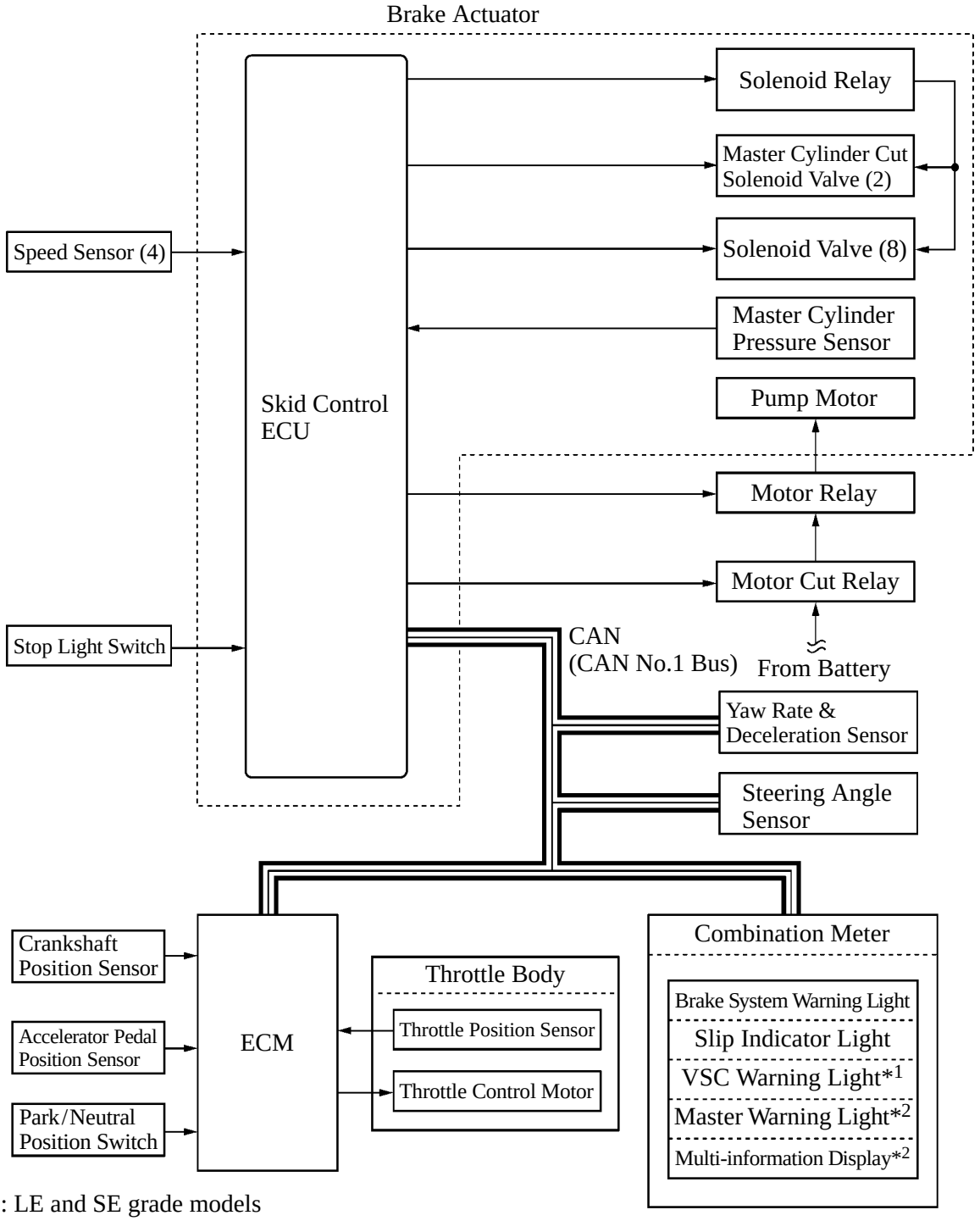

*1: LE and SE grade models
*2: XLE grade models

025CH45P

▶ System Diagram (TMMK Made Models) ◀

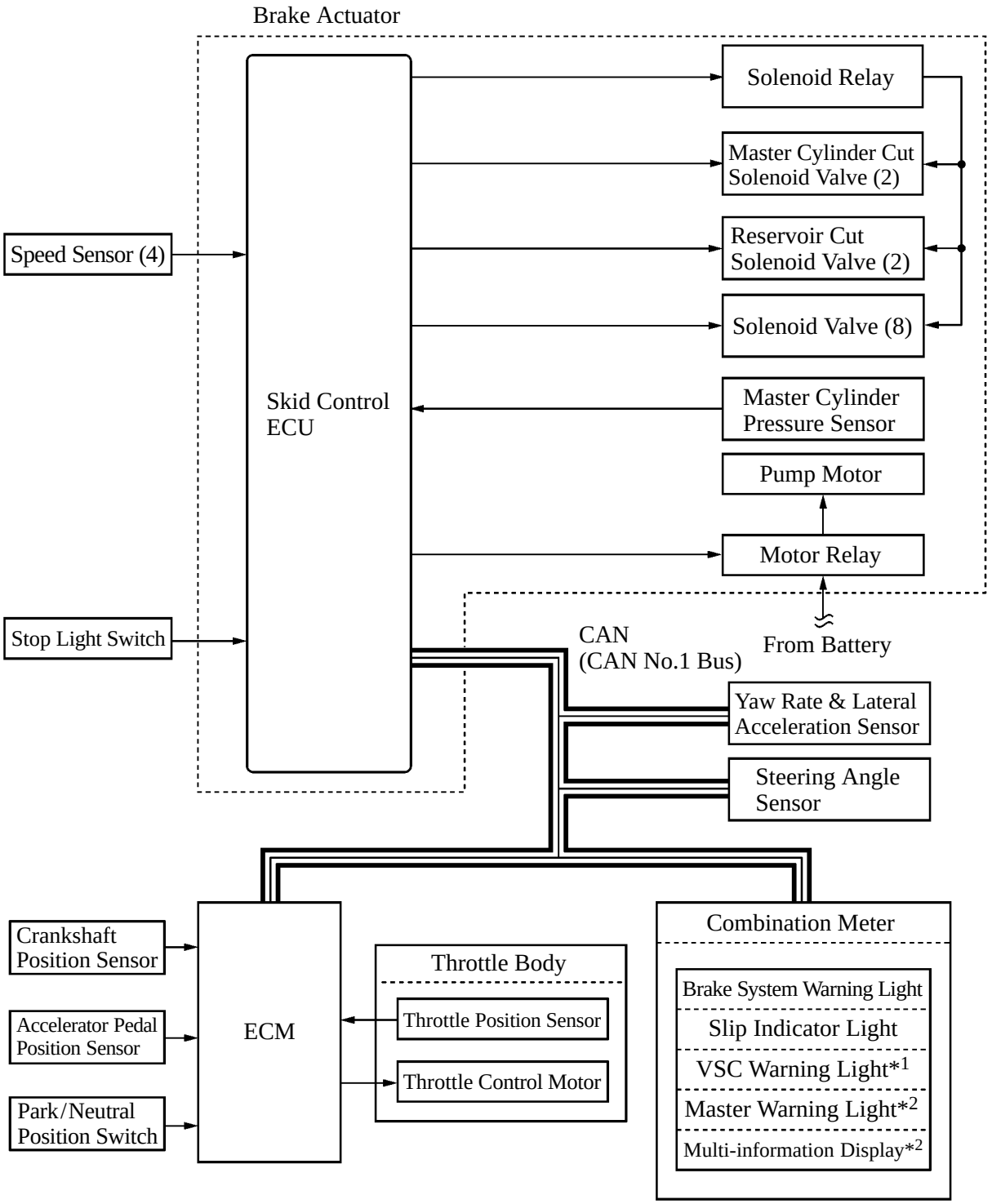

025CH46P

*1: LE and SE grade models
*2: XLE grade models

▶ Pressure Increase Mode (TMC Made Models) ◀

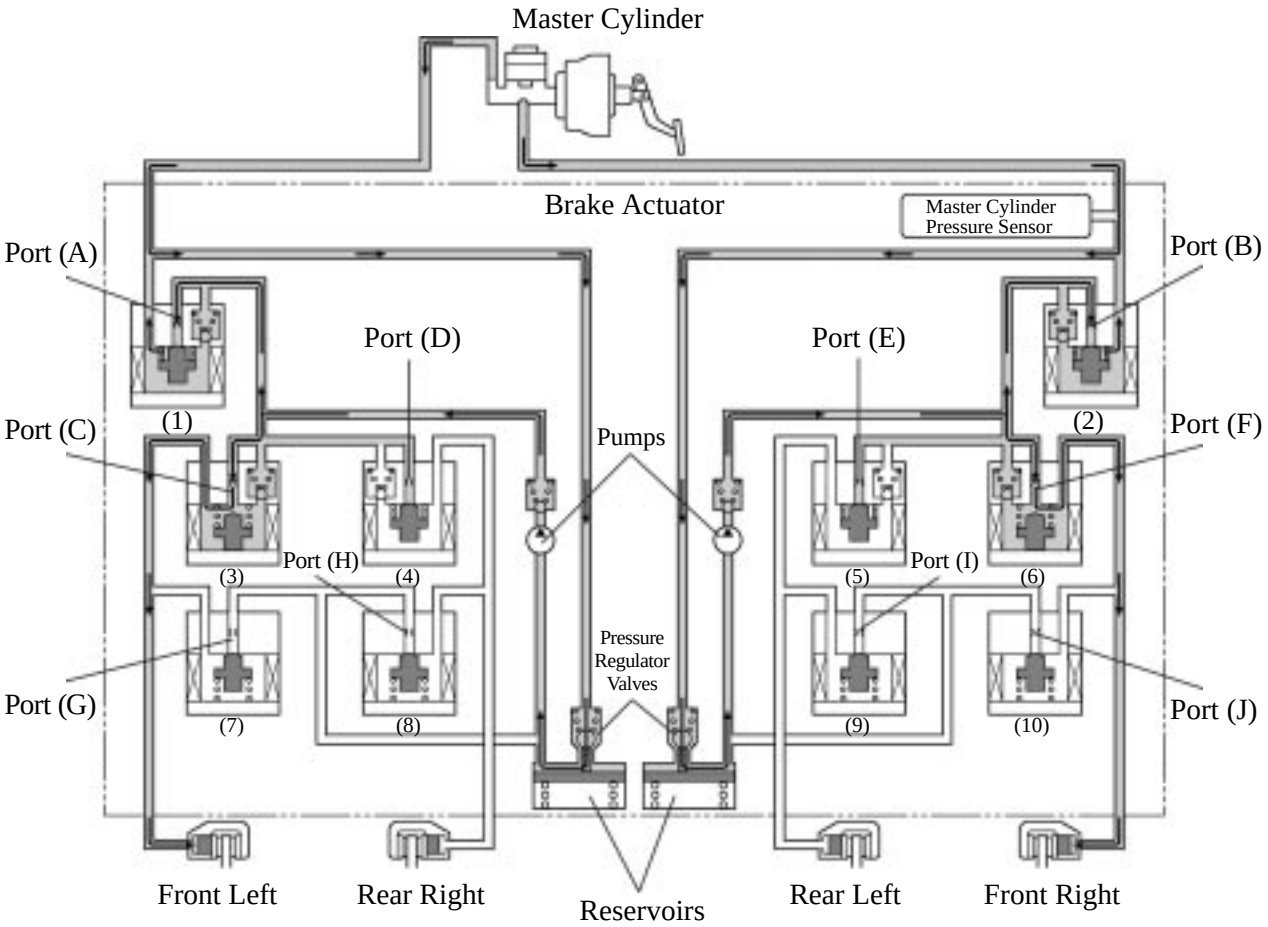

Pressure Increase Mode

Item			TRAC not Activated	TRAC Activated Mode		
				Increase Mode	Holding Mode	Reduction Mode
(1), (2)	Master Cylinder Cut Solenoid Valve		OFF/ Open	ON*	Δ	Δ
	Port: (A), (B)					
Front Brake	(3), (6)	Pressure Holding Solenoid Valve	OFF/ Open	Δ	ON/ Close	Δ
		Port: (C), (F)				
	(7), (10)	Pressure Reduction Solenoid Valve	OFF/ Close	Δ	Δ	ON/ Open
		Port: (G), (J)				
	Wheel Cylinder Pressure		—	Increase	Holding	Reduce
Rear Brake	(4), (5)	Pressure Holding Solenoid Valve	OFF/ Open	ON/ Close	Δ	Δ
		Port: (D), (E)				
	(8), (9)	Pressure Reduction Solenoid Valve	OFF/ Close	Δ	Δ	Δ
		Port: (H), (I)				
	Wheel Cylinder Pressure		—	—	—	—

*: The solenoid valve controls the hydraulic pressure between “open” and “close” according to the operating condition by adjusting continually.

▶ Pressure Increase Mode (TMMK Made Models) ◀

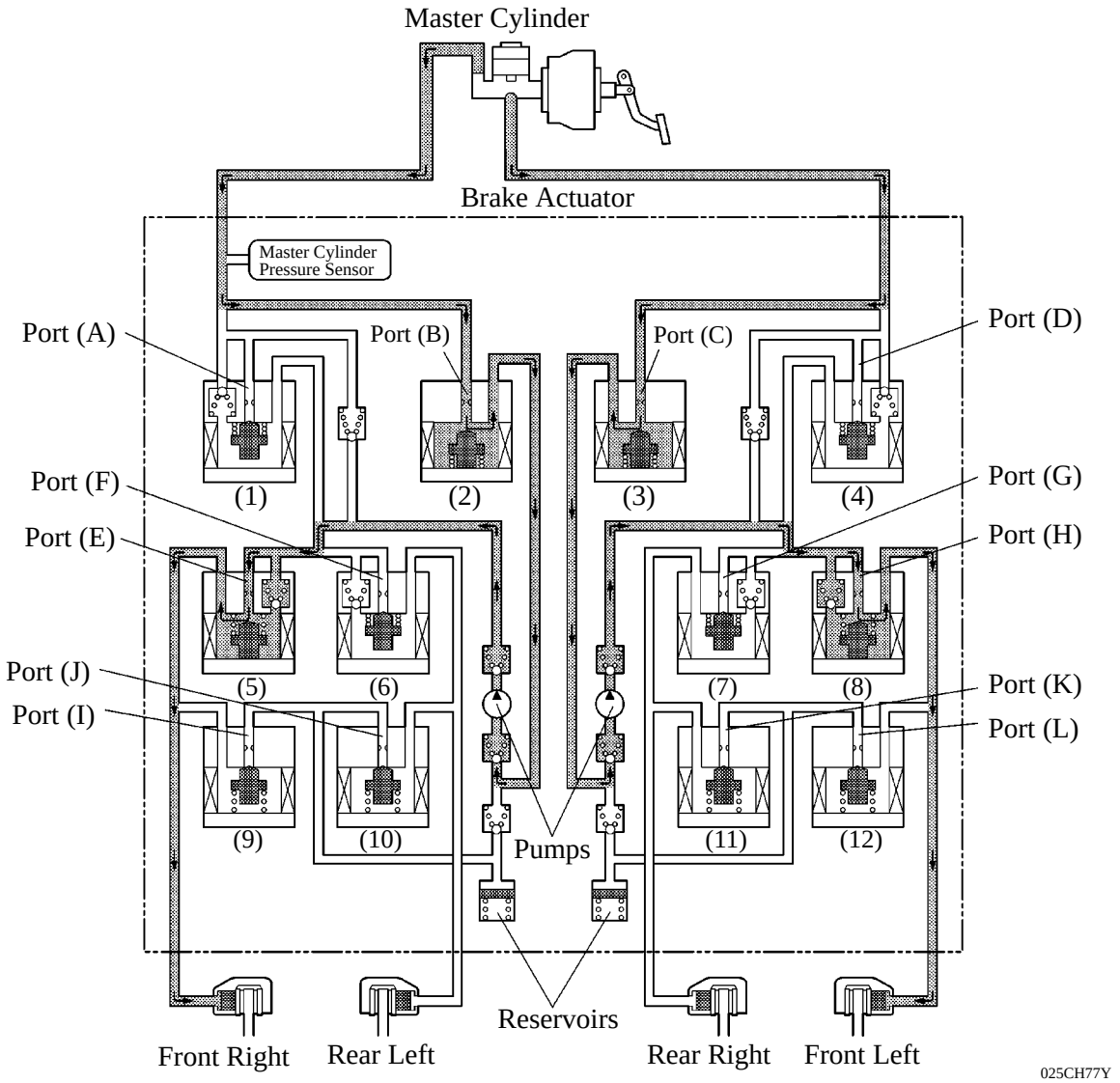

Item			TRAC not Activated	TRAC Activated		
				Increase Mode	Hold Mode	Reduction Mode
(1), (4)	Master Cylinder Cut Solenoid Valve		OFF/ Open	ON/ Close	Δ	Δ
	Port: (A), (D)					
(2), (3)	Reservoir Cut Solenoid Valve		OFF/ Close	ON/ Open	Δ	Δ
	Port: (B), (C)					
Front Brake	(5), (8)	Pressure Holding Valve	OFF/ Open	Δ	ON/ Close	Δ
		Port: (E), (H)				
	(9), (12)	Pressure Reduction Valve	OFF/ Close	Δ	Δ	ON/ Open
		Port: (I), (L)				
	Wheel Cylinder Pressure		—	Increase	Hold	Reduction
Rear Brake	(6), (7)	Pressure Holding Valve	OFF/ Open	ON/ Close	Δ	Δ
		Port: (F), (G)				
	(10), (11)	Pressure Reduction Valve	OFF/ Close	Δ	Δ	Δ
		Port: (J), (K)				
	Wheel Cylinder Pressure		—	—	—	—

VSC Operation

1) General

The VSC operation, by way of solenoid valves, controls the fluid pressure that is generated by the pump and applies it to the brake wheel cylinder of each wheel in the following 3 modes: pressure reduction, pressure holding, and pressure increase modes. As a result, the tendency to front wheel skid or rear wheel skid is controlled.

▶ System Diagram (TMC Made Models) ◀

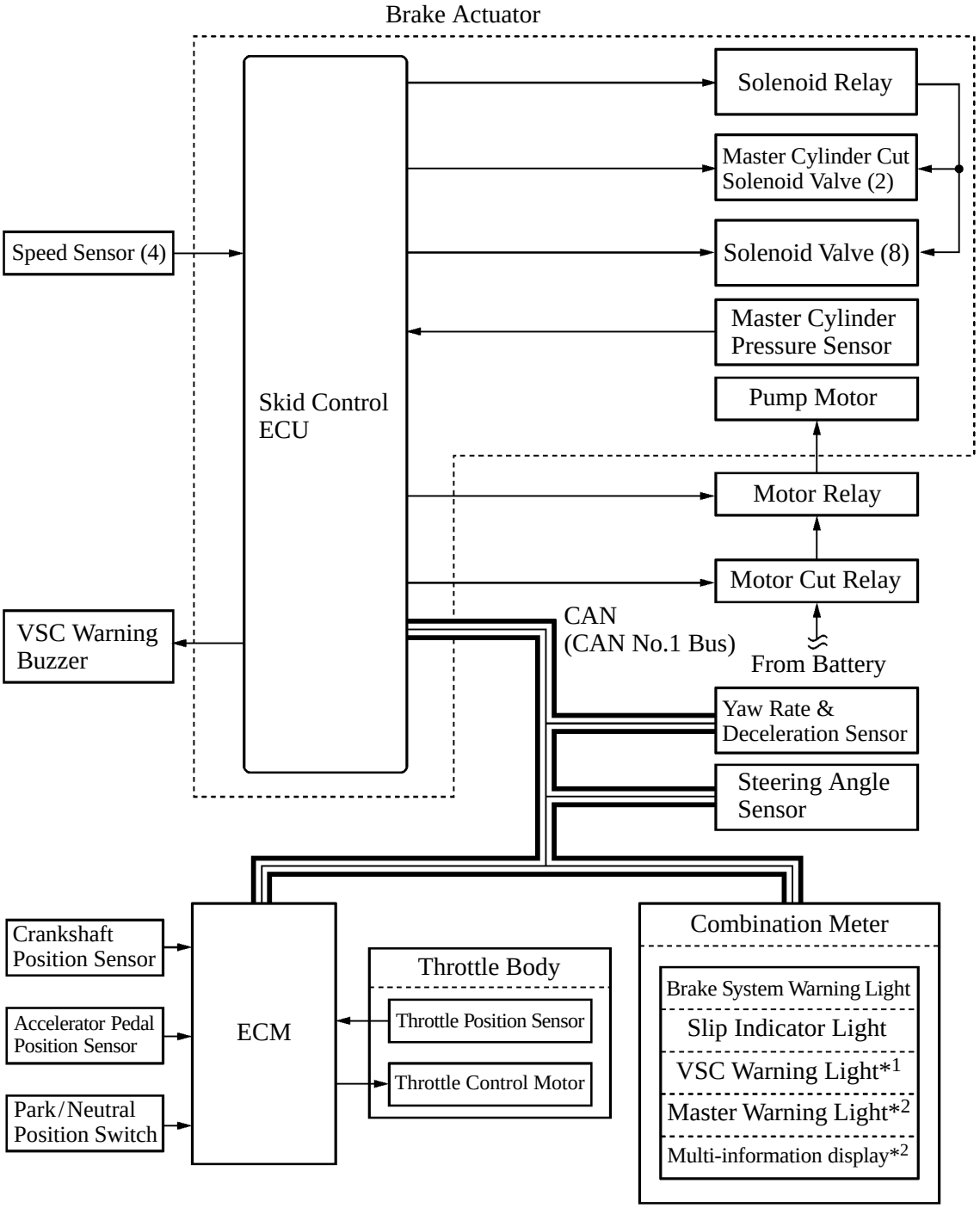

*1: Without XLE Grade
*2: With XLE Grade

▶ System Diagram (TMMK Made Models) ◀

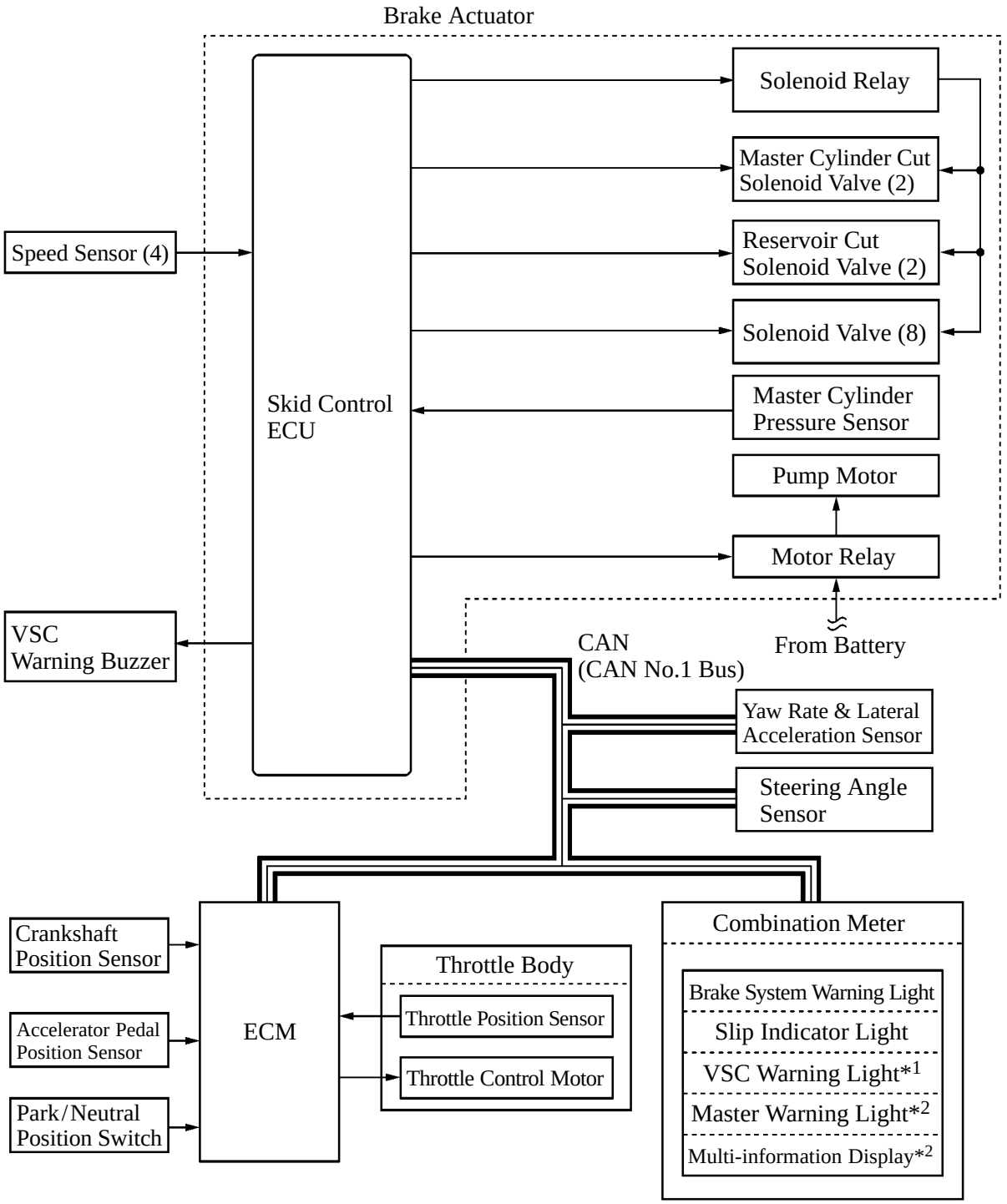

*1: LE and SE grade models
*2: XLE grade models

2) Front Wheel Skid Restraining Control (Turn to the Right)

In the front wheel skid restraining control, the brakes of the front wheels and the rear wheel of the inner circle of the turn are applied. Also, depending on whether the brake is ON or OFF and the condition of the vehicle, there are circumstances in which the brake might not be applied to the wheels even if those wheels are targeted for braking.

The diagram below shows the hydraulic circuit in the pressure increase mode, as it controls the front wheel skid condition while the vehicle makes a right turn.

In other operating modes, the pressure holding valve and the pressure reduction valve are turned ON/OFF according to the ABS with EBD operation pattern.

The front wheel skid restraining control is activated, each solenoid operates as shown in the table on the next page.

▶ Pressure Increase Mode (TMC Made Models) ◀

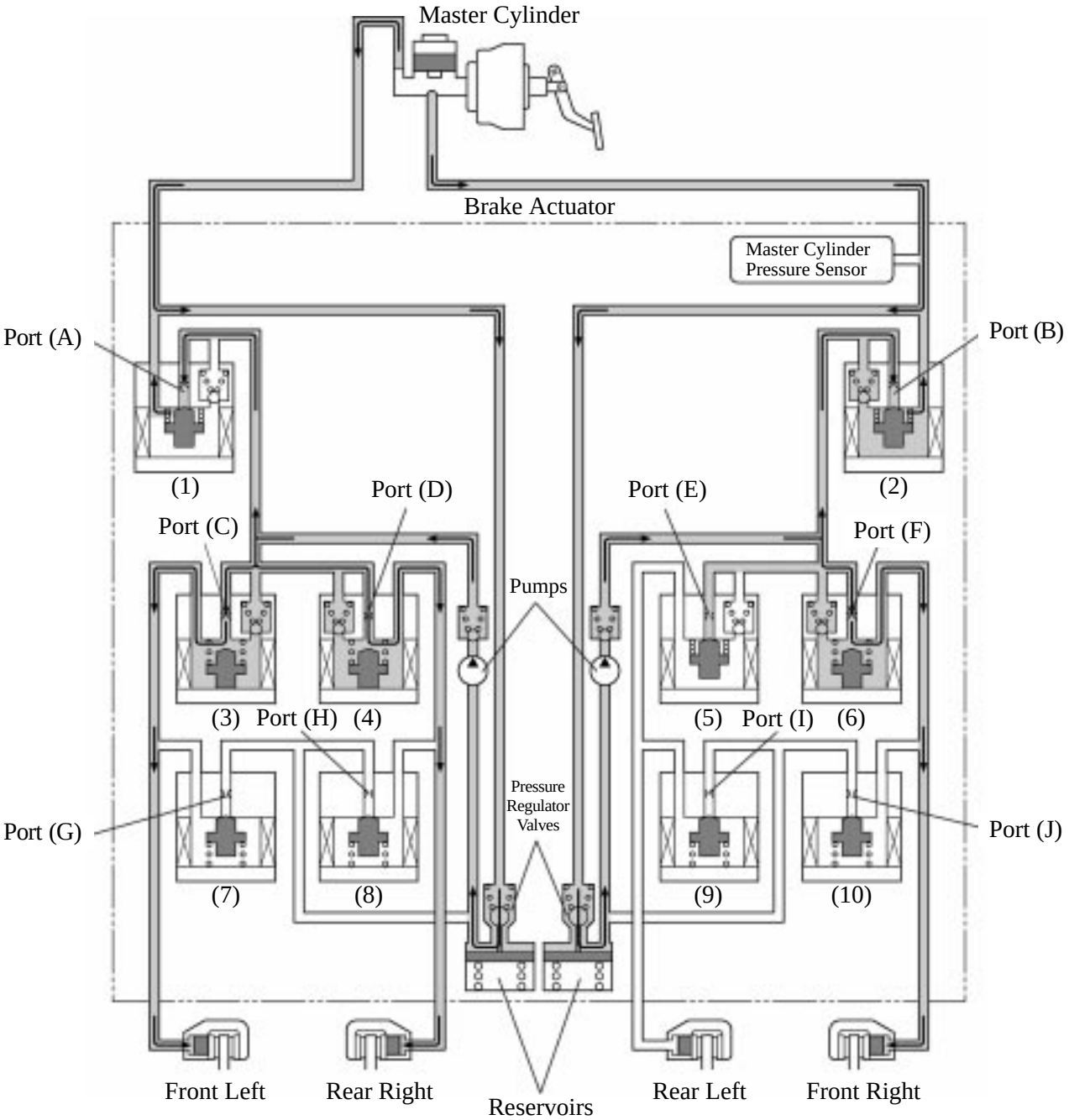

Pressure Increase Mode

Item			VSC not Activated	VSC Activated Mode		
				Increase Mode	Holding Mode	Reduction Mode
(1), (2)	Master Cylinder Cut Solenoid Valve Port: (A), (B)		OFF/ Open	ON*	Δ	Δ
Front Brake	(3)	Pressure Holding Solenoid Valve Port: (C)	OFF/ Open	Δ	ON/ Close	Δ
	(6)	Pressure Holding Solenoid Valve Port: (F)	OFF/ Open	Δ	ON/ Close	Δ
	(7)	Pressure Reduction Solenoid Valve Port: (G)	OFF/ Close	Δ	Δ	ON/ Open
	(10)	Pressure Reduction Solenoid Valve Port: (J)	OFF/ Close	Δ	Δ	ON/ Open
	Wheel Cylinder Pressure	Right	—	Increase	Holding	Reduce
		Left	—	Increase	Holding	Reduce
Rear Brake	(4)	Pressure Holding Solenoid Valve Port: (D)	OFF/ Open	Δ	ON/ Close	Δ
	(5)	Pressure Holding Solenoid Valve Port: (E)	OFF/ Open	ON/ Close	Δ	Δ
	(8)	Pressure Reduction Solenoid Valve Port: (H)	OFF/ Close	Δ	Δ	ON/ Open
	(9)	Pressure Reduction Solenoid Valve Port: (I)	OFF/ Close	Δ	Δ	Δ
	Wheel Cylinder Pressure	Right	—	Increase	Holding	Reduce
		Left	—	—	—	—

*: The solenoid valve controls the hydraulic pressure between “open” and “close” according to the operating condition by adjusting continually.

▶ Pressure Increase Mode (TMMK Made Models) ◀

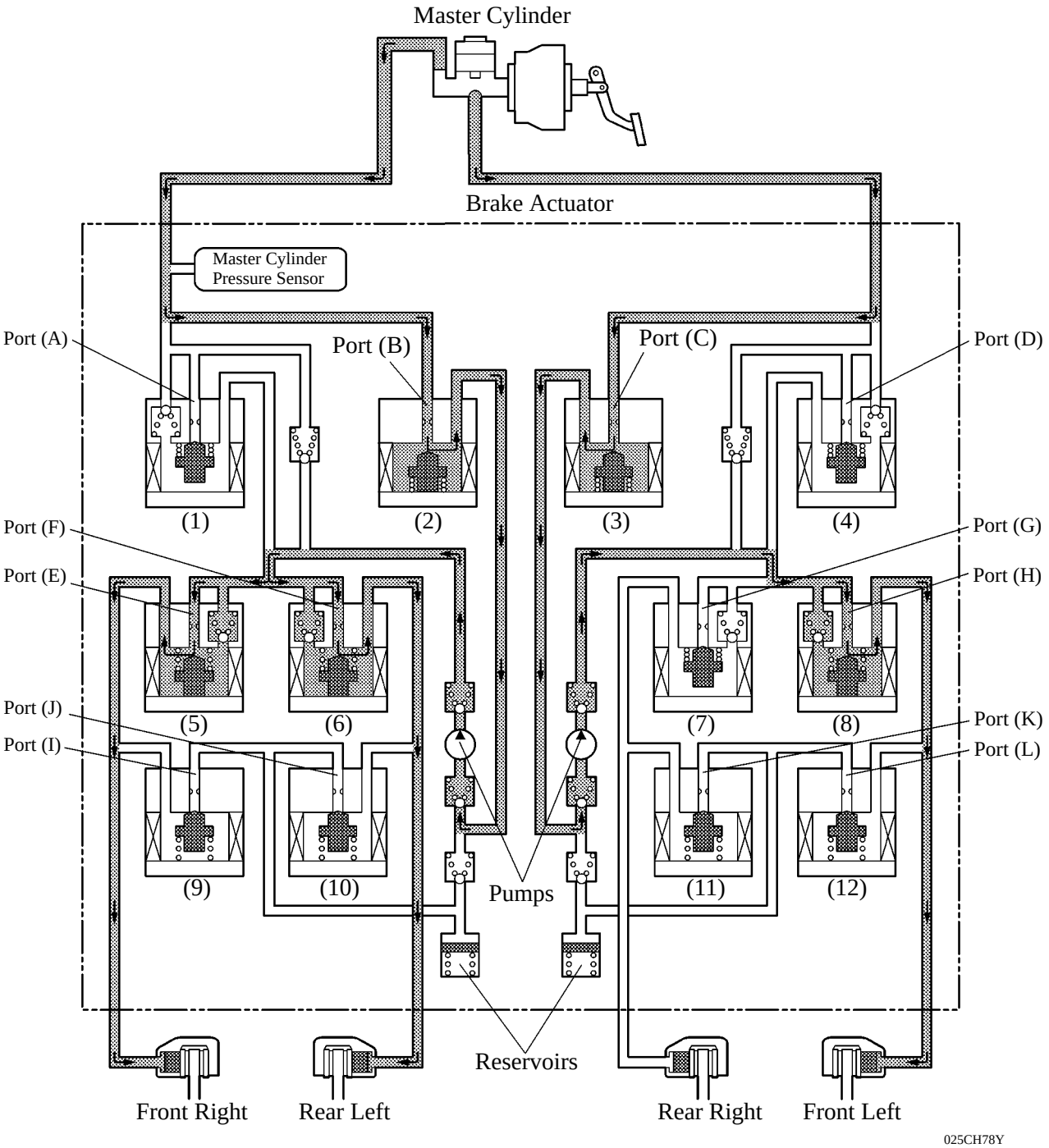

Increase Mode

Item				VSC not Activated	VSC Activated		
					Increase Mode	Hold Mode	Reduction Mode
(1), (4)	Master Cylinder Cut Solenoid Valve			OFF/ Open	ON/ Close	△	△
	Port: (A), (D)						
(2), (3)	Reservoir Cut Solenoid Valve			OFF/ Close	ON/ Open	△	△
	Port: (B), (C)						
Front Brake	(5), (8)	Pressure Holding Valve		OFF/ Open	△	ON/ Close	△
		Port: (E), (H)					
	(9), (12)	Pressure Reduction Valve		OFF/ Close	△	△	ON/ Open
		Port: (I), (L)					
	Wheel Cylinder Pressure			—	Increase	Hold	Reduction
Rear Brake	(6)	Pressure Holding Valve (Rear Right)		OFF/ Open	△	ON/ Close	△
		Port: (F)					
	(7)	Pressure Holding Valve (Rear Left)		OFF/ Open	ON/ Close	△	△
		Port: (G)					
	(10)	Pressure Reduction Valve (Rear Right)		OFF/ Close	△	△	ON/ Open
		Port: (J)					
	(11)	Pressure Reduction Valve (Rear Left)		OFF/ Close	△	△	△
		Port: (K)					
	Wheel Cylinder Pressure		Right	—	Increase	Hold	Reduction
			Left	—	—	—	—

3) Rear Wheel Skid Restraining Control (Turn to the Right)

In rear wheel skid restraining control, the brake of the front wheel of the outer circle of the turn is applied. Also, depending on whether the brake is ON or OFF and the condition of the vehicle, there are circumstances in which the brake might not be applied to the wheels even if those wheels are targeted for braking.

The diagram below shows the hydraulic circuit in the pressure increase mode, as it controls the rear wheel skid condition while the vehicle make a right turn.

In other operating modes, the pressure holding valve and the pressure reduction valve are turned ON/OFF according to the ABS with EBD operating pattern.

The rear wheel skid restraining control system is activated, each solenoid operates as shown in the table on the next page.

▶ Pressure Increase Mode (TMC Made Models) ◀

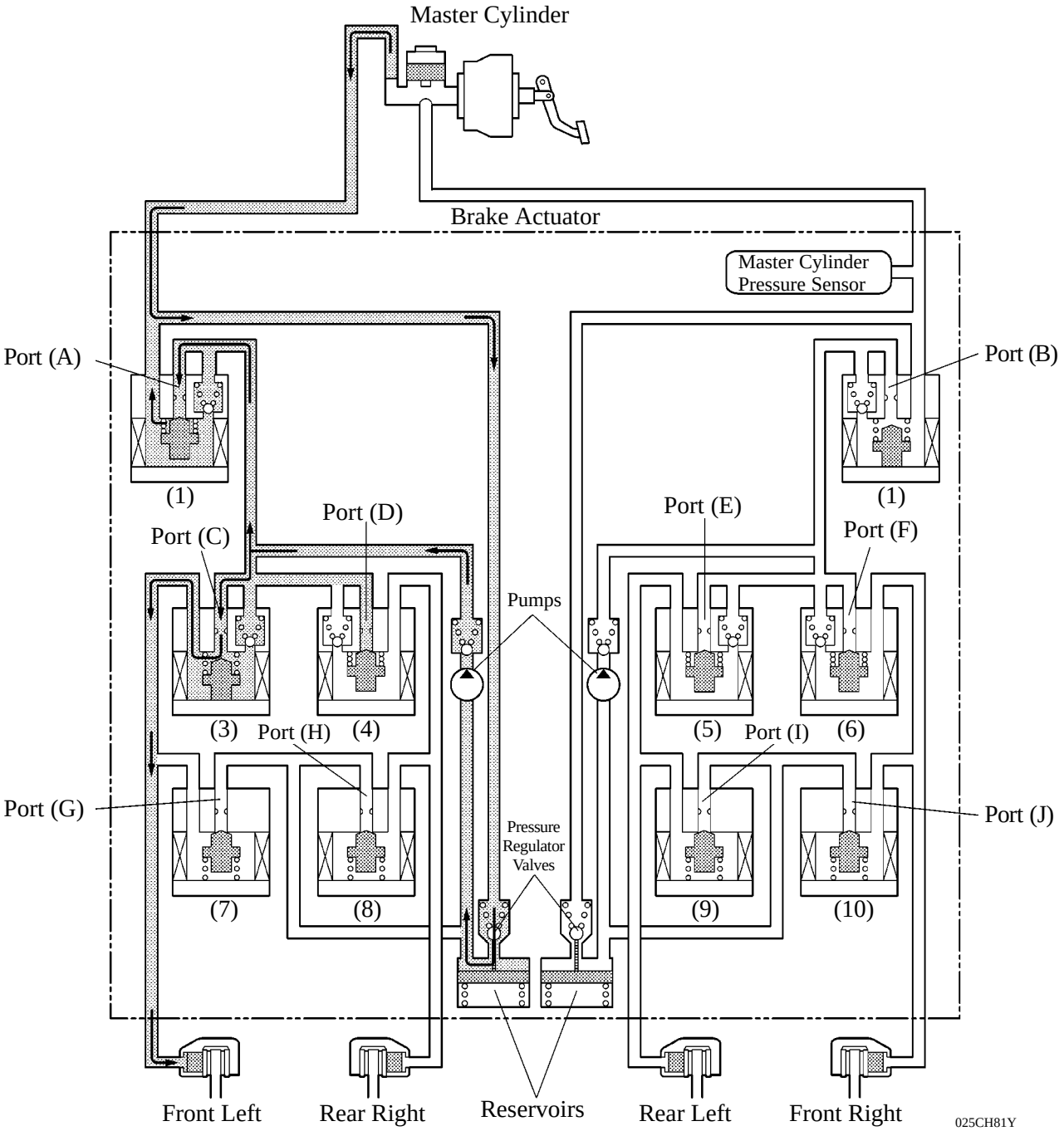

Pressure Increase Mode

Item			VSC not Activated	VSC Activated Mode		
				Increase Mode	Holding Mode	Reduction Mode
(1)	Master Cylinder Cut Solenoid Valve Port: (A)		OFF/Open	ON*	Δ	Δ
(2)	Master Cylinder Cut Solenoid Valve Port: (B)		OFF/Open	Δ	Δ	Δ
Front Brake	(3)	Pressure Holding Solenoid Valve Port: (C)	OFF/Open	Δ	ON/Close	Δ
	(6)	Pressure Holding Solenoid Valve Port: (F)	OFF/Open	ON/Close	Δ	Δ
	(7)	Pressure Reduction Solenoid Valve Port: (G)	OFF/Close	Δ	Δ	ON/Open
	(10)	Pressure Reduction Solenoid Valve Port: (J)	OFF/Close	Δ	Δ	Δ
	Wheel Cylinder Pressure	Right	—	—	—	—
		Left	—	Increase	Holding	Reduce
Rear Brake	(4)	Pressure Holding Solenoid Valve Port: (D)	OFF/Open	ON/Close	Δ	Δ
	(5)	Pressure Holding Solenoid Valve Port: (E)	OFF/Open	ON/Close	Δ	Δ
	(8)	Pressure Reduction Solenoid Valve Port: (H)	OFF/Close	Δ	Δ	Δ
	(9)	Pressure Reduction Solenoid Valve Port: (I)	OFF/Close	Δ	Δ	Δ
	Wheel Cylinder Pressure	Right	—	—	—	—
		Left	—	—	—	—

*: The solenoid valve controls the hydraulic pressure between “open” and “close” according to the operating condition by adjusting continually.

▶ Pressure Increase Mode (TMMK Made Models) ◀

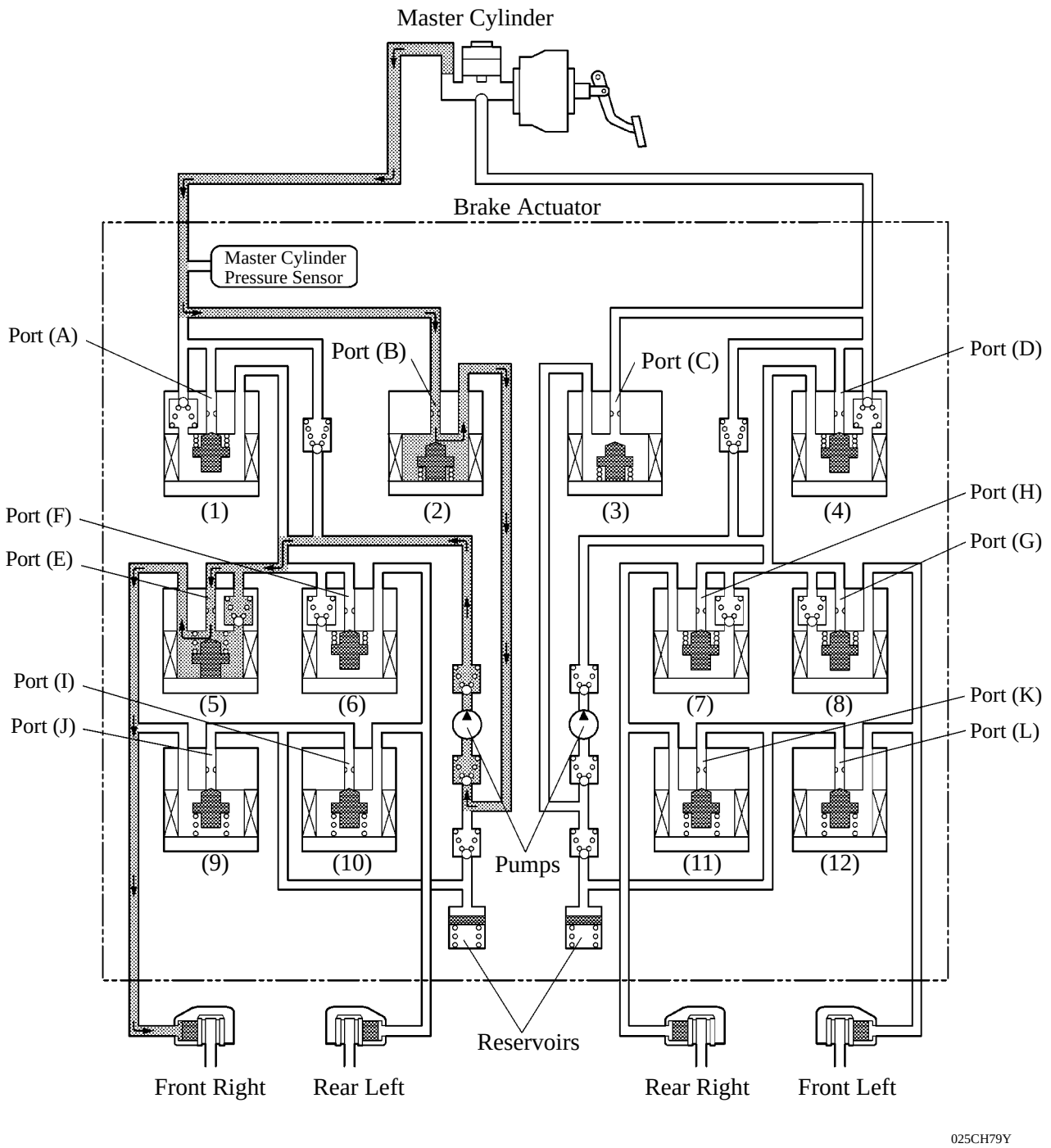

Increase Mode

Item				VSC not Activated	VSC Activated		
					Increase Mode	Hold Mode	Reduction Mode
(1), (4)	Master Cylinder Cut Solenoid Valve Port: (A), (D)			OFF/ Open	ON/ Close	△	△
(2), (3)	Reservoir Cut Solenoid Valve Port: (B), (C)			OFF/ Close	ON/ Open	△	△
Front Brake	(8)	Pressure Holding Valve (Front Right) Port: (H)		OFF/ Open	ON/ Close	△	△
	(5)	Pressure Holding Valve (Front Left) Port: (E)		OFF/ Open	△	ON/ Close	△
	(12)	Pressure Reduction Valve (Front Right) Port: (L)		OFF/ Close	△	△	△
	(9)	Pressure Reduction Valve (Front Left) Port: (I)		OFF/ Close	△	△	ON/ Open
	Wheel Cylinder Pressure		Right	—	—	—	—
			Left	—	Increase	Hold	Reduction
Rear Brake	(6)	Pressure Holding Valve (Rear Right) Port: (F)		OFF/ Open	ON/ Close	△	△
	(7)	Pressure Holding Valve (Rear Left) Port: (G)		OFF/ Open	ON/ Close	△	△
	(10)	Pressure Reduction Valve (Rear Right) Port: (J)		OFF/ Close	△	△	△
	(11)	Pressure Reduction Valve (Rear Left) Port: (K)		OFF/ Close	△	△	△
	Wheel Cylinder Pressure		Right	—	—	—	—
			Left	—	Increase	Hold	Reduction

Engine Output Control

During a VSC operation, the skid control ECU outputs a VSC operation signal to the ECM. Upon receiving this signal, the ECM effects throttle control to regulate the engine output.

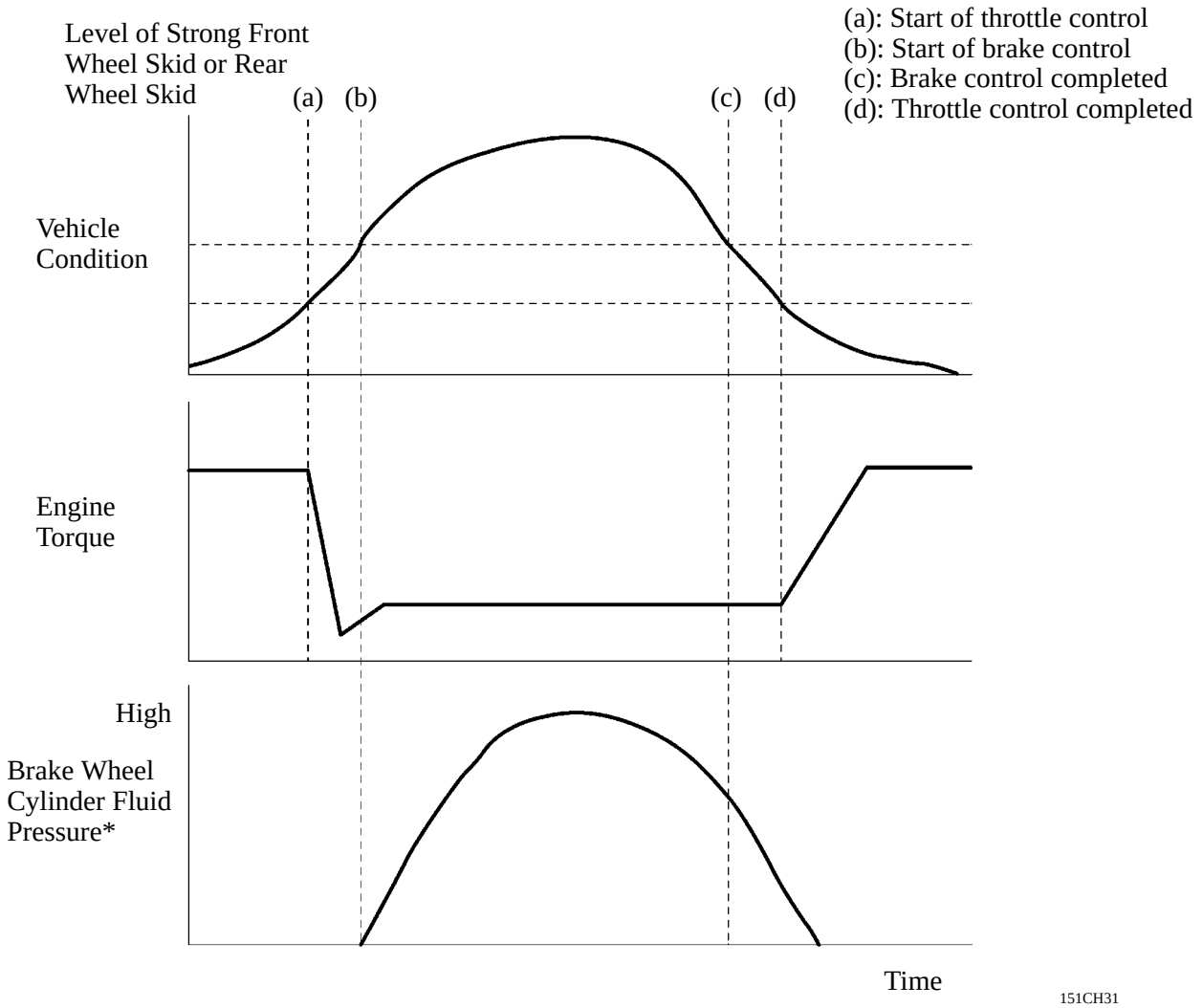

*: The wheel cylinder that activates varies depending on the condition of the vehicle.

Initial Check

Each time the power source is IG ON*, and the vehicle reaches a speed of approximately 6 km/h (4 mph) or more, the skid control ECU performs an initial check. The functions of each solenoid valve and pump motor in the brake actuator are checked in sequence.

*: The power source condition can be changed by operating the engine switch on models with the smart key system, and the ignition switch on models without the smart key system.

11. CAN (Controller Area Network)

CAN communication is used between the skid control ECU, steering angle sensor, yaw rate & deceleration sensor (lateral acceleration sensor), ECM, main body ECU and DLC3. For details of CAN communication, see page BE-8.

12. Service Mode

▶ The TRAC OFF switch designed for ’06 Camry is not used on ’07 Camry.

▶ A new service mode has been created for ’07 Camry. In this mode, TRAC and VSC functions can be forcibly turned OFF, either through the operation of a hand-held tester or by operating the parking brake and the brake pedal together. Please refer to the following service tip for information regarding changing the service mode.

Service Tip

Transition to the service mode (TRAC and VSC OFF mode).
The TRAC and VSC systems can be turned off by following the procedures below:

▶ When using the parking brake and brake pedal:
1) Check that the power source is OFF and the shift lever is in position P.
2) Start the engine after turning the power source ON.
3) Operate the following steps 4 to 8 within 30 seconds of starting the engine.
4) Turn the parking brake switch on.
5) Depress and release the brake pedal twice.
6) Turn the parking brake switch on and off twice while depressing the brake pedal.
7) Depress and release the brake pedal twice while the parking brake switch is on.
Notice: Steps 6 and 7 should each be performed within 15 seconds.
8) Check that the slip indicator light and VSC warning light (LE and SE grade models) are turned on or “CHECK VSC SYSTEM” message will appear on the multi-information display (XLE grade models). If not, repeat the procedure from the step 1.
9) The brake control system can be returned to the normal mode by turning the power source ON from OFF.

▶ When using the hand-held tester:
1) Check that the power source is OFF and the shift lever is in position P.
2) Start the engine after turning the power source ON.
3) Connect the hand-held tester to the DLC3, and operate it to send signals of memory change function.
4) The brake control system can be returned to the normal mode by turning the power source ON from OFF

For details of the transition to service mode, see the 2007 Camry Repair Manual (Pub. No. RM0250U).

13. Diagnosis

General

If the skid control ECU detects a malfunction in the brake control system (ABS with EBD, brake assist, TRAC and VSC), the ABS, brake system, master warning lights and multi-information display the corresponds to the function for which the malfunction has been detected illuminates or indicates, as indicated in the table below, to alert the drive of the malfunction.

▪ : Illuminate Δ: Indicate

Item	ABS	EBD	Brake Assist	TRAC	VSC
ABS Warning Light	▪	▪	▪	—	—
Brake System Warning Light	—	▪	—	—	—
VSC Warning Light*1	—*3	—*3	—*3	▪	▪
Master Warning Light*2	—*3	—*3	—*3	▪	▪
Multi-information Display*2 (Warning Message "CHECK VSC") 025CH49P	—*3	—*3	—*3	Δ	Δ

*1: LE and SE grade models
*2: XLE grade models
*3: Failure in the ABS, EBD, and brake assist systems prohibits operation of the TRAC, VSC systems. Accordingly, the VSC or master warning lights will be illuminated and the "CHECK VSC" message will appear on the multi-information display.

At the same time, the DTC (Diagnostic Trouble Code) are stored in the memory. The DTC can be read by connecting SST (09843-18040) between the Tc and CG terminals of the DLC3, and observing the blinking of the ABS warning light or the observing the diagnostic code indicated on the multi-information display, connecting a hand-held tester.

This system has a sensor signal check (test mode) function. This function is activated by connecting the SST (09843-18040) between the Ts and CG terminal of the DLC3 or by connecting a hand-held tester. The ABS warning light and VSC warning light blinks at a 0.25-second interval. This check function performs deceleration sensor check, yaw rate sensor check, master cylinder pressure sensor check, and speed sensor check.

▶ Display example of the multi-information display ●

Normal system code is displayed

025CH50P

DTC is displayed

025CH56P

If the skid control ECU detects a malfunction during a sensor signal check (test mode), it stores the DTC in its memory. These DTC can be read during a sensor check operation by connecting the SST (09843-18040) to the Tc and CG terminals of the DLC3 and observing the blinking of the ABS warning light or observing the diagnostic code indicated on the multi-information display, or connecting a hand-held tester.

For details of the DTC that are stored in skid control ECU memory and the DTC that are output through the sensor signal check (test mode) functions, see the 2007 Camry Repair Manual (Pub. No. RM0250U).

Service Tip

The skid control ECU uses the CAN protocol for diagnostic communication. Therefore, a hand-held tester and a dedicated adapter [CAN VIM (Vehicle Interface Module)] are required for accessing diagnostic data. For details, see the 2007 Camry Repair Manual (Pub. No. RM0250U).

Diagnosis of CAN

If a malfunction occurs on a CAN communication line, the skid control ECU is connected to the CAN communication lines and it will store the DTC (Diagnostic Trouble Code) in its memory.

There are 2-digit DTC and 5-digit DTC for CAN communications related to the brake control system (ABS with EBD, brake assist, TRAC and VSC).

- 2-digit DTC can be read by connecting the SST (09843-18040) to Tc and CG terminals of the DLC3, and observing the diagnostic code indicated on the VSC warning light (LE and SE grade models) or multi-information display (XLE grade models) in the combination meter.
- 5-digit DTC can be read by connecting a hand-held tester to the DLC3.

Service Tip

The skid control ECU uses the CAN protocol for diagnostic communication. Therefore, a hand-held tester and a dedicated adapter [CAN VIM (Vehicle Interface Module)] are required for accessing diagnostic data. For details, see the 2007 Camry Repair Manual (Pub. No. RM0250U).

Fail-Safe

In the event of a malfunction in the ABS and/or brake assist controls, the skid control ECU prohibits the ABS, brake assist, TRAC and VSC operations.

In the event of a malfunction in the EBD control, the skid control ECU prohibits the EBD operation. Even in this case, usual braking performance excluding the brake control system (ABS with EBD, brake assist, TRAC and VSC) is secured.

In the event of a malfunction in the TRAC and/or VSC, the skid control ECU prohibits TRAC and VSC operations.

If a communication malfunction occurs between the skid control ECU, the steering angle sensor, the yaw rate & deceleration sensor or ECM, the skid control ECU stops the TRAC and VSC.

When the ECM detects the DTC, it will disable the TRAC and VSC.

TIRE PRESSURE WARNING SYSTEM

▪ DESCRIPTION

A direct-sensing type tire pressure warning system is used on U.S.A. model.

If the vehicle continues to be driven with 1 or more of the 5 tires (which includes the standard type spare tire*) inflated to a low air pressure that could cause problems during driving, this system will illuminate the tire pressure warning light to inform the driver of the low air pressure.

Furthermore, this system directly senses the air pressure of each tire through tire pressure warning system valve & transmitter that are attached to each wheel.

After tire replacement, firstly register tire pressure warning system valve & transmitter IDs into the tire pressure warning system ECU, and then store the appropriate tire pressure in the ECU using the tire pressure warning system reset switch.

*: Optional Equipment

▶ System Diagram ●

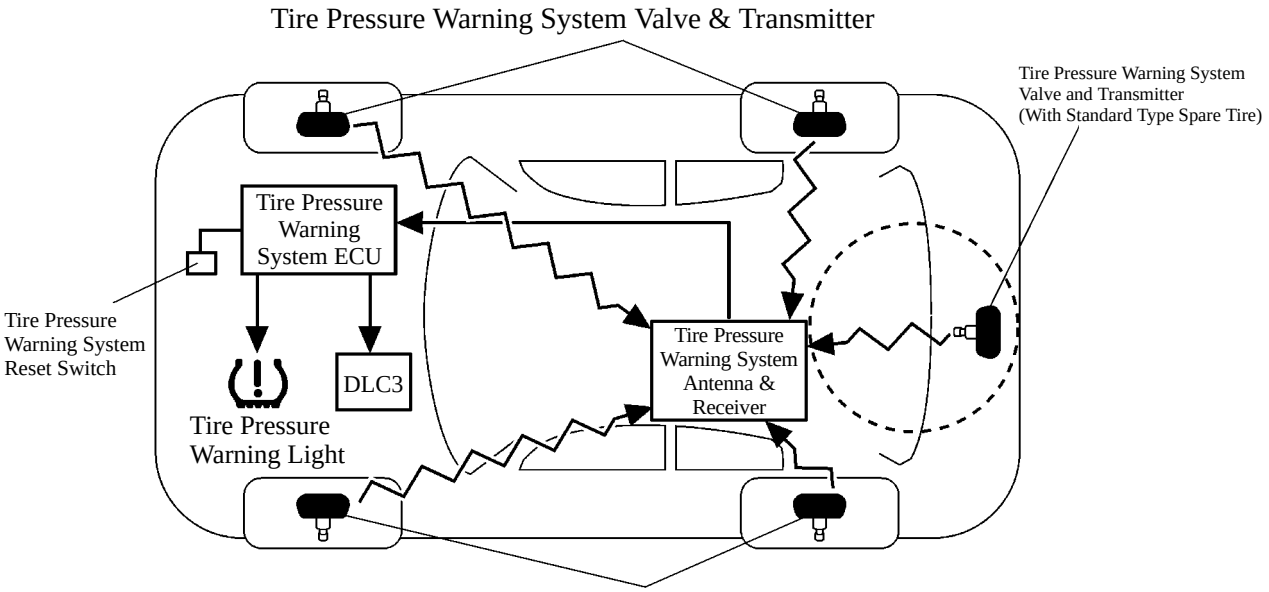

275TU34

▪ LAYOUT OF MAIN COMPONENTS

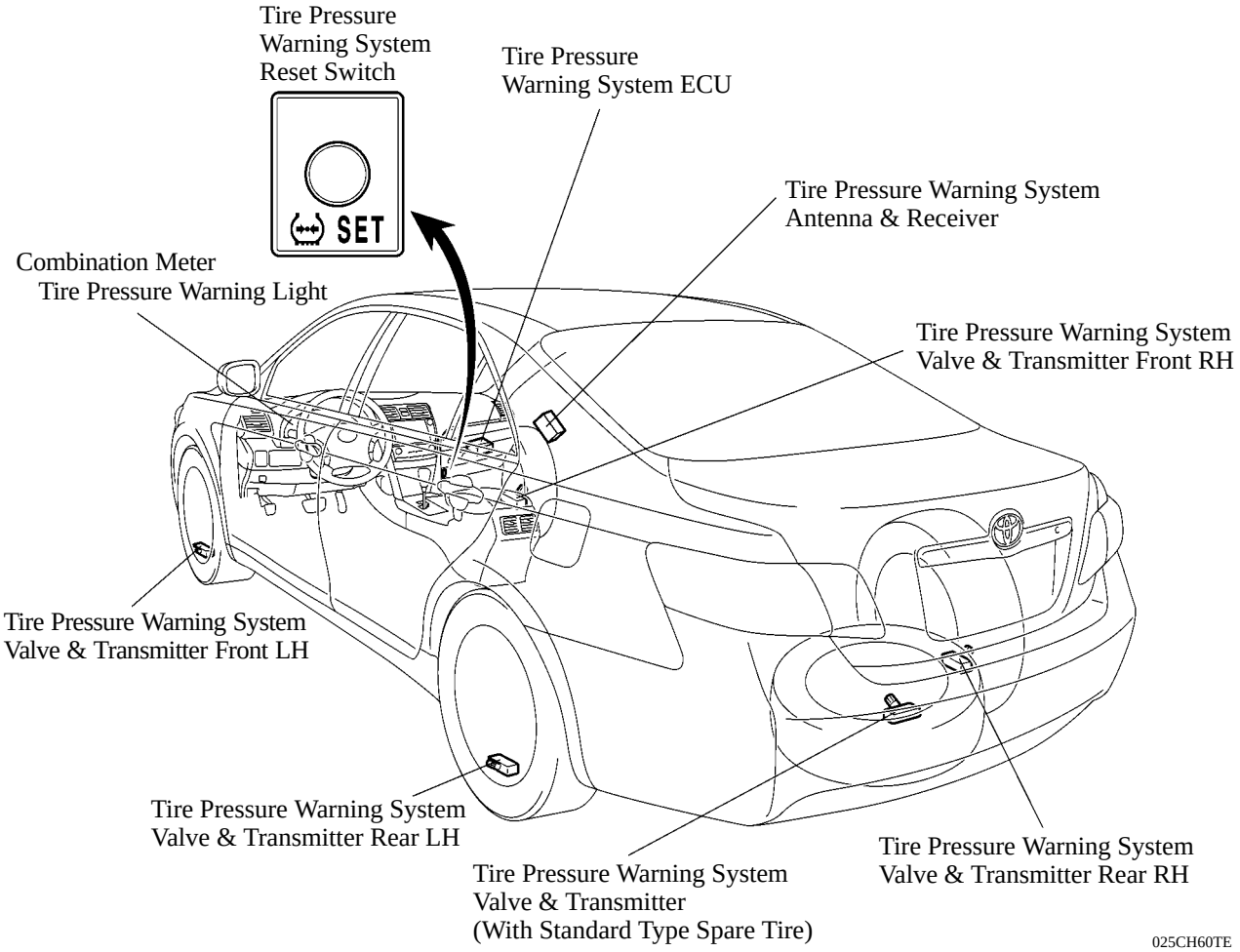

▪ FUNCTION OF MAIN COMPONENTS

Component		Outline
Combination Meter		Transmits the vehicle speed signal to the tire pressure warning system ECU for vehicle speed correction
	Tire Pressure Warning Light	Turns ON or blinks to warn the driver in accordance with the signal from the tire pressure warning system ECU. Displays the 2-digit DTC (Diagnostic Trouble Code).
Tire Pressure Warning System Reset Switch		The appropriate air pressures of the tires currently mounted on the vehicle are stored in the tire pressure warning system ECU by operating the tire pressure warning system reset switch.
Tire Pressure Warning System Valve & Transmitter		Detects the inflation pressure and internal temperature of the tire and transmits the measured value and the ID number to the tire pressure warning antenna & receiver.
Tire Pressure Warning System Antenna & Receiver		Receives the tire pressure warning system valve & transmitter signal and transmits this data to the tire pressure warning system ECU.
Tire Pressure Warning System ECU		Receives the data from the tire pressure warning system antenna & receiver and monitors the tire inflation pressure. When the tire pressure warning system ECU detects a drop in the tire inflation pressure or a system malfunction, it outputs the respective signal to the combination meter.

■CONSTRUCTION AND OPERATION

1. Tire Pressure Warning System Valve & Transmitter

The tire pressure warning system valve & transmitter is integrated in the air valve of a disc wheel. It measures the pressure and the temperature of the air in the tire and transmits the measured values and a recognition ID to the tire pressure warning system valve & transmitter.

If the battery voltage drops, the tire pressure warning system valve & transmitter assembly must be replaced. Furthermore, if the battery voltage drops, the tire pressure warning system valve & transmitter will be unable to transmit signals, which causes a DTC to be output.

Tire pressure warning system valve & transmitter with 5 different ID code range are used on one vehicle.

Each tire pressure warning system valve & transmitter has a built-in semi-conductor to directly measure the inflation pressure of the tire.

Frequency of the tire pressure warning system valve & transmitter is 314.98 MHz.

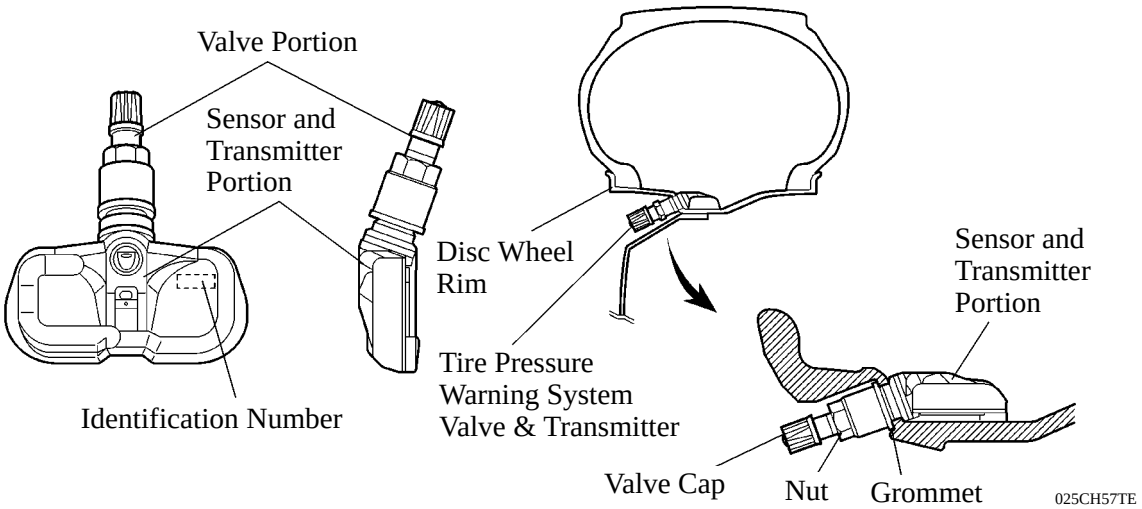

NOTICE

Ensure the proper direction of the tire pressure warning system valve & transmitter by adhering to the prescribed procedure for installing a tire pressure warning system valve & transmitter on a wheel. Failure to do so could result in an incorrect measurement of the tire air inflation pressure. Make sure to replace the tires in accordance with the prescribed procedure. To prevent the tire pressure warning system valve & transmitter from damage, drop the tire pressure warning system valve & transmitter into the wheel before removing the tire. Failure to do so could damage the tire pressure warning system valve & transmitter.

For further details regarding the above, see the 2007 Camry Repair Manual (Pub. No RM0250U).

Service Tip

If the lithium battery is depleted, replace the entire tire pressure warning system valve & transmitter assembly.

After a tire pressure warning system valve & transmitter has been replaced, the ID of the tire pressure warning system valve & transmitter must be registered in the ECU. To register an ID, use a hand-held tester to enter the ID code that is indicated on the sensor.

When replacing the tire pressure warning system valve & transmitter, all the separate ID codes of the 5-tire pressure warning system valve & transmitter must be registered. Even if only 1 tire pressure warning system valve & transmitter is replaced, the ID codes of all 5 tire pressure warning system valve & transmitter must be registered again.

A new tire pressure warning system valve & transmitter that is available as a service part is in the sleep mode in its initial state, to prevent the battery from depleting. During PDS (Pre-Delivery Service), after the tire pressure warning system valve & transmitter and the tire are correctly mounted on the disc wheel, inflating the tire to the specified pressure causes the sleep mode to cancel. Keep the air pressure of the spare tire the same as the set air pressure amount of the front and rear tires.

For further details regarding the above, see the 2007 Camry Repair Manual (Pub. No. RM0250U).

2. Tire Pressure Warning System Antenna & Receiver and Tire Pressure Warning System ECU

The tire pressure warning system antenna & receiver, receives the radio wave signals from the tire pressure warning system valve & transmitter and transmits those signals to the tire pressure warning system ECU.

The tire pressure warning system antenna & receiver receives the tire inflation pressure data and sensor identification data.

The tire pressure warning system antenna & receiver can determine from the received data whether the signals came from its own tires.

▶ Wiring Diagram ◀

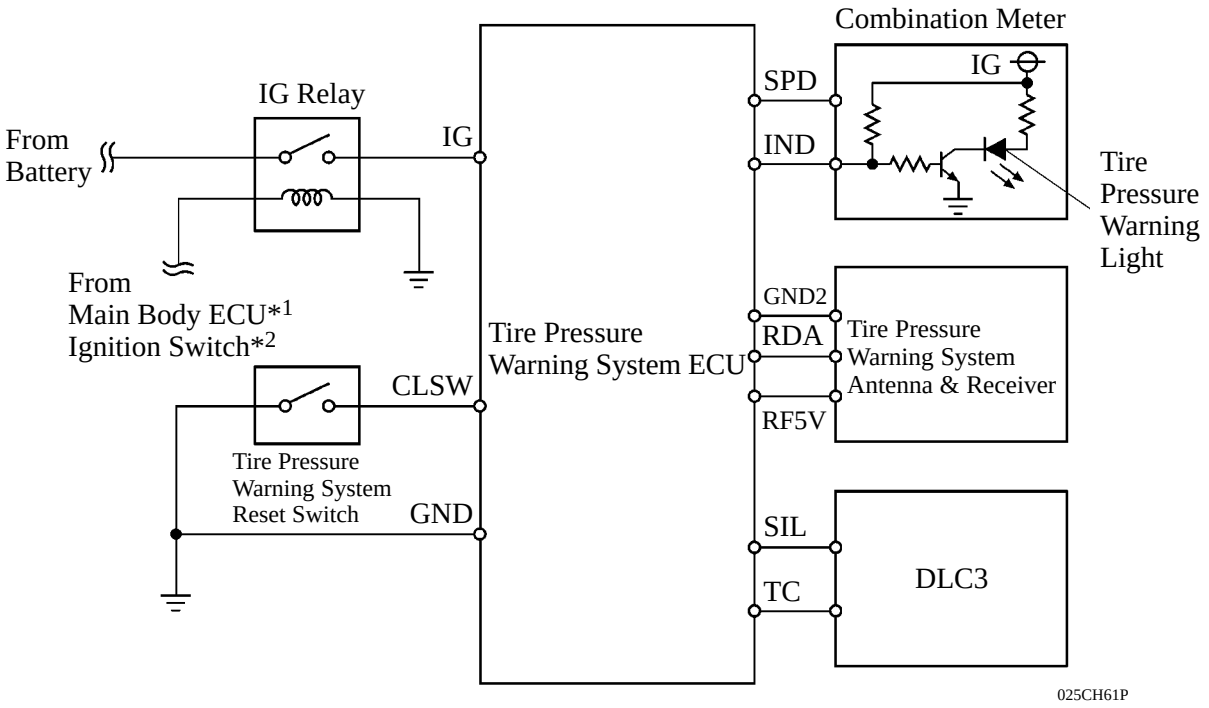

*1: Models with smart key system
*2: Except models with smart key system

3. Tire Pressure Warning System Reset Switch

By operating the tire pressure warning system reset switch, tire pressure warning system ECU can be set to issue a warning at an inflation pressure that corresponds with the type of tires. Therefore, the dealer must set the warning threshold to the proper value in order to comply with the local regulations.

Operate the tire pressure warning system reset switch only after the inflation pressures of all 5 tires (including the standard type spare tire*) have been adjusted on the vehicle.

To initialize the system, press and hold the tire pressure warning system reset switch for 3 seconds or longer with the engine switch turned ON. After the system has been initialized, the tire pressure warning light blinks 3 times at 0.5 Hz.

During the initialization, the tire pressure warning system valve & transmitter measures the inflation pressure of the tires, and registers the signals that are transmitted into the ECU at a frequency of 1 per minute. The initialization process is completed when the signals from the 5 tires have been received.

Once the tire pressure warning system reset switch has been pressed, turning OFF the engine switch is not recommended for a few minutes.

*: Optional Equipment

Service Tip

Since the initialized values are dependent upon the accuracy of the tire pressure gauge to be used, use a tire pressure gauge that has been properly calibrated.
The system must be initialized in the following conditions:
1) New vehicle delivery
2) Replacement with tires of different size (inflation pressure)
3) Tire pressure warning system ECU replacement

CAUTION

If the system is initialized with tires whose inflation pressure deviates from the threshold pressure, the system can be initialized at those values. Therefore, initialize only after the tires have been inflated to the specified air pressure.

4. Tire Pressure Warning Light

The tire pressure warning light is located in the combination meter.

This warning light illuminates or blinks in accordance with signals from the tire pressure warning system ECU if the vehicles own tires are inflated with low pressure or if malfunction occurs in the system.

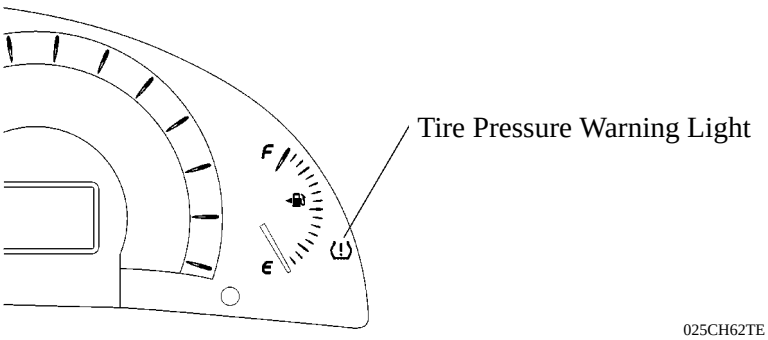

025CH62TE

5. Self-Diagnosis

If malfunctions are detected in the system, the tire pressure warning system ECU warns the driver by illuminating the tire pressure warning light after blinking it at 1 Hz intervals for 1 minute, and stores the DTC (Diagnostic Trouble Code) in the memory.
The DTC that are stored by the tire pressure warning system ECU can be accessed by connecting the SST (09843-18040) to the DLC3 terminals TC and CG, and reading the blinking of the tire pressure warning light. They can also be accessed by connecting a hand-held tester. The table below lists the DTC that pertain to this system. For further details, see the 2007 Camry Repair Manual (Pub No. RM0250U).

Service Tip

After the DTC have been detected, it is necessary to identify the wheel that contains the faulty tire pressure warning system valve & transmitter. It can be identified by performing the operation in accordance with the prescribed procedure. For details, see the 2007 Camry Repair Manual (Pub. No. RM0250U)

DTC No.	Detection Item	DTC Deletion Condition
C2111/11	Tire pressure warning system valve & transmitter ID1 operation stop (sleep mode)	When data is received from a transmitter with an ID code that is registered in the ECU, or the ID code of the tire pressure warning system valve & transmitter is newly registered in the ECU.
C2112/12	Tire pressure warning system valve & transmitter ID2 operation stop (sleep mode)	
C2113/13	Tire pressure warning system valve & transmitter ID3 operation stop (sleep mode)	
C2114/14	Tire pressure warning system valve & transmitter ID4 operation stop (sleep mode)	
C2115/15	Tire pressure warning system valve & transmitter ID5 operation stop (sleep mode)	
C2121/21	Data from tire pressure warning system valve & transmitter registered to ID1 not received	When a DTC deletion operation is implemented or the ID code of the tire pressure warning valve & transmitter is newly registered in the ECU.
C2122/22	Data from tire pressure warning system valve & transmitter registered to ID2 not received	
C2123/23	Data from tire pressure warning system valve & transmitter registered to ID3 not received	
C2124/24	Data from tire pressure warning system valve & transmitter registered to ID4 not received	
C2125/25	Data from tire pressure warning system valve & transmitter registered to ID5 not received	
C2141/41	A malfunction in the tire pressure warning system valve & transmitter registered to ID1	
C2142/42	A malfunction in the tire pressure warning system valve & transmitter registered to ID2	
C2143/43	A malfunction in the tire pressure warning system valve & transmitter registered to ID3	
C2144/44	A malfunction in the tire pressure warning system valve & transmitter registered to ID4	
C2145/45	A malfunction in the tire pressure warning system valve & transmitter registered to ID5	
C2165/65	Abnormal temperature inside ID1 tire	
C2166/66	Abnormal temperature inside ID2 tire	
C2167/67	Abnormal temperature inside ID3 tire	
C2168/68	Abnormal temperature inside ID4 tire	

(Continued)

DTC No.	Detection Item	DTC Deletion Condition
C2169/69	Abnormal temperature inside ID5 tire	When a DTC deletion operation is implemented or the ID code of the tire pressure warning valve & transmitter is newly registered in the ECU.
C2171/71	Tire pressure sensor ID not registered	
C2176/76	Tire pressure warning system antenna & receiver is error	
C2177/77	Initialization incomplete	
C2181/81	Data from tire pressure warning system valve & transmitter registered to ID1 not received (test diagnosis)	When deletion conditions of the ID codes have been established or departing from the test mode.
C2182/82	Data from tire pressure warning system valve & transmitter registered to ID2 not received (test diagnosis)	
C2183/83	Data from tire pressure warning system valve & transmitter registered to ID3 not received (test diagnosis)	
C2184/84	Data from tire pressure warning system valve & transmitter registered to ID4 not received (test diagnosis)	
C2185/85	Data from tire pressure warning system valve & transmitter registered to ID5 not received (test diagnosis)	
C2191/91	Vehicle speed signal error (test diagnosis)	

STEERING

▪ DESCRIPTION

A rack and pinion type steering gear with an engine speed sensing type power steering is used on the all models.

The pressure return type vane pump is used which makes the discharge pressure flow volume return at middle and high speed, thus secured the fine steering feeling.

A manual tilt and telescopic mechanism is used.

The steering column uses an energy absorbing mechanism.

An electrical steering lock system is used on models with smart key system.

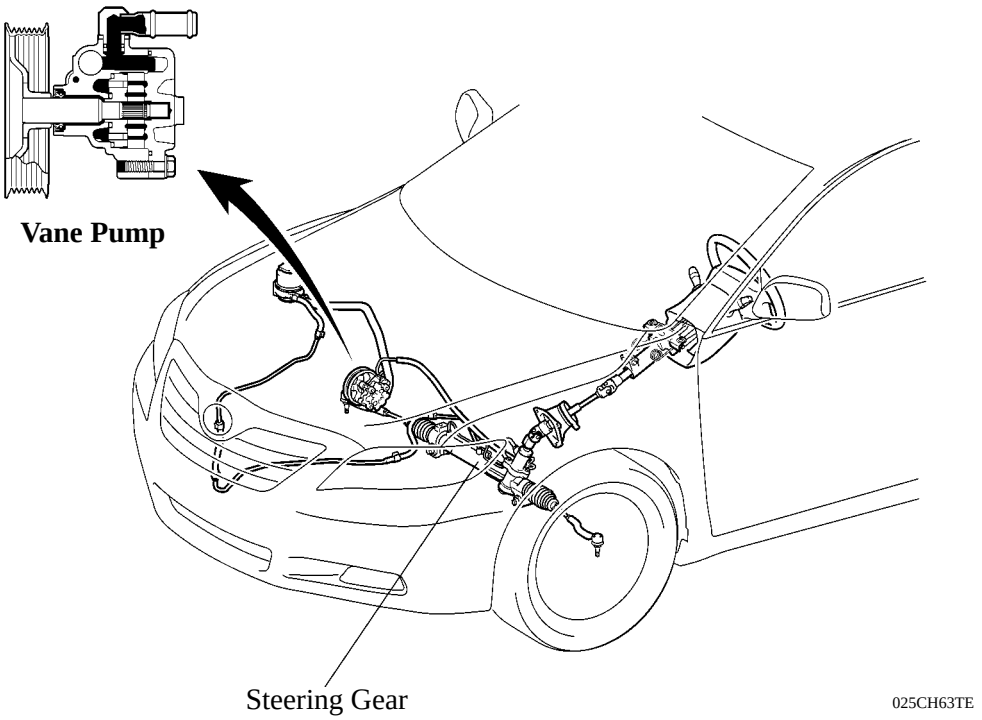

▶ Specifications ●

Grade	SE		LE, XLE	
Engine Type	2AZ-FE	2GR-FE	2AZ-FE	2GR-FE
Gear Ratio (Overall)	15.9	16.1	16.0	Δ
No. of Turns Lock to Lock	3.20			
Rack Stroke mm (in.)	156.0 (6.14)			
Fluid Type	ATF Type DEXRON®II or III			

■POWER STEERING VANE PUMP

1. Construction

The rod type flow control valve, which adjusts flow rate according to the pump speed and load by moving the inside rod to change the opening area of the orifice, is used in this pump.

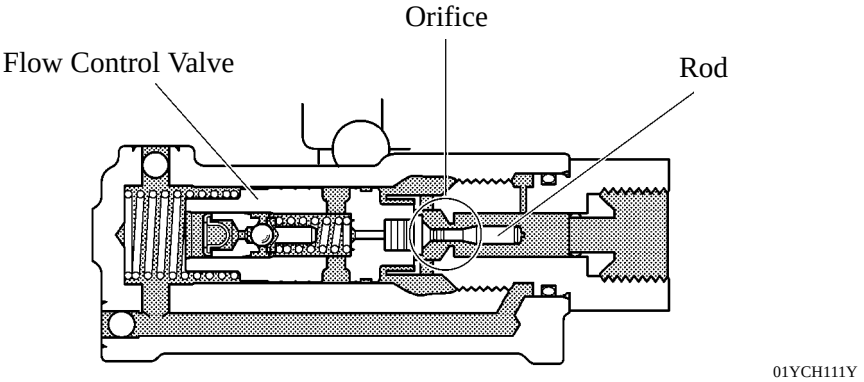

2. Operation

▶ Flow Rate Characteristics ◀

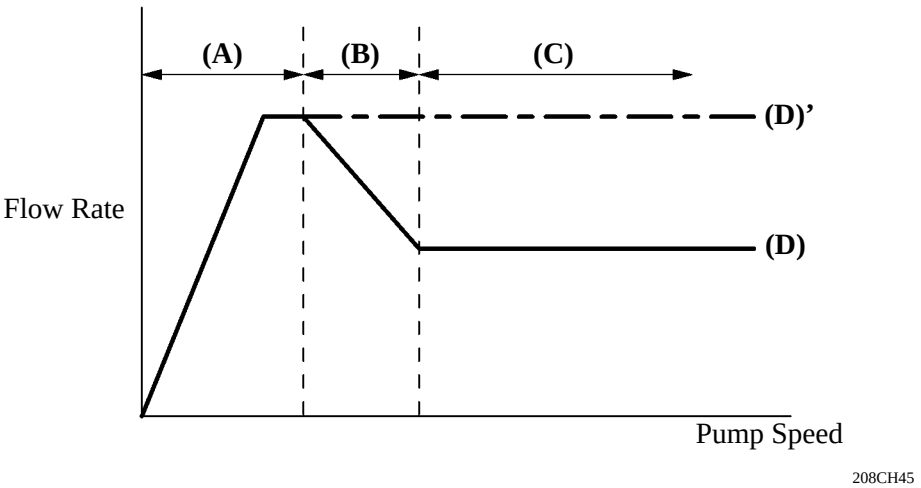

At Low Pump Speed Range (A)

The flow rate increases proportionally to pump speed.

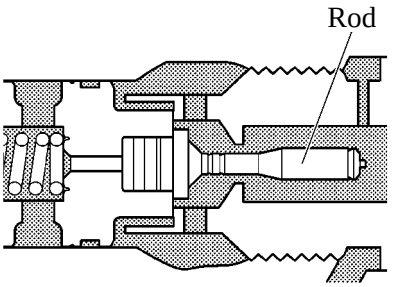

01YCH112Y

At Middle Pump Speed Range without Steering (B)

The flow control valve moves to the left , the flow rate is decreased due to reducing of orifice area, which related to the rod shaft diameter at each certain position.

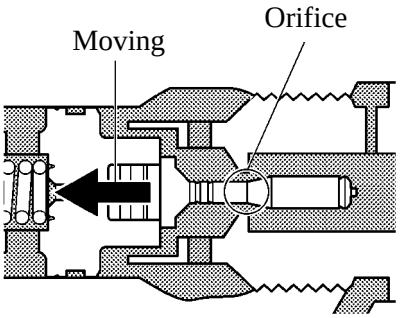

01YCH113Y

At High Pump Speed Range without Steering (C)

The flow control valve moves further to the left, flow rate is further reduced by maximum rod shaft diameter.

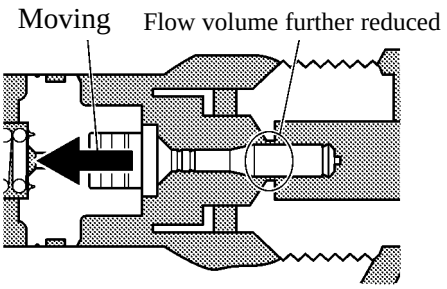

01YCH114Y

During Pressure Loading (D → D')

When operating the steering in the middle or high pump speed range, the pressure inside the vane pump is increased pushing the flow control to moves back to the right which is result in increasing of the flow rate.

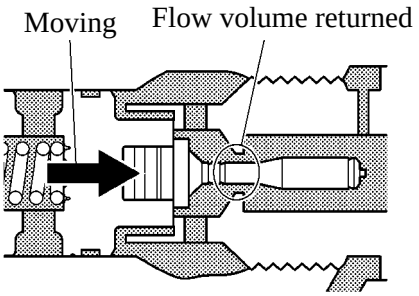

01YCH115Y

■STEERING COLUMN

1. Tilt and Power Telescopic Steering Column

The manual tilt and telescopic mechanism mainly consists of a tilt lever, steering column tube, breakaway bracket, tilt lever lock bolt, and tilt steering stoppers.

The tilt lever controls the tilt and the telescope motion.

With the tilt adjustment range of 3.2 (stepless) and the telescopic adjustment range of 40 mm (1.57 in.), the steering column can be adjusted to a position selected by the driver.

When the tilt and telescopic mechanism is in its locked state, the tilt lever at B position causes the cam of the tilt steering stoppers to tighten the steering column tube.

When the tilt and telescopic mechanism is in its free state, the tilt lever at A position causes the cam of the tilt steering stoppers to loosen the steering column tube.

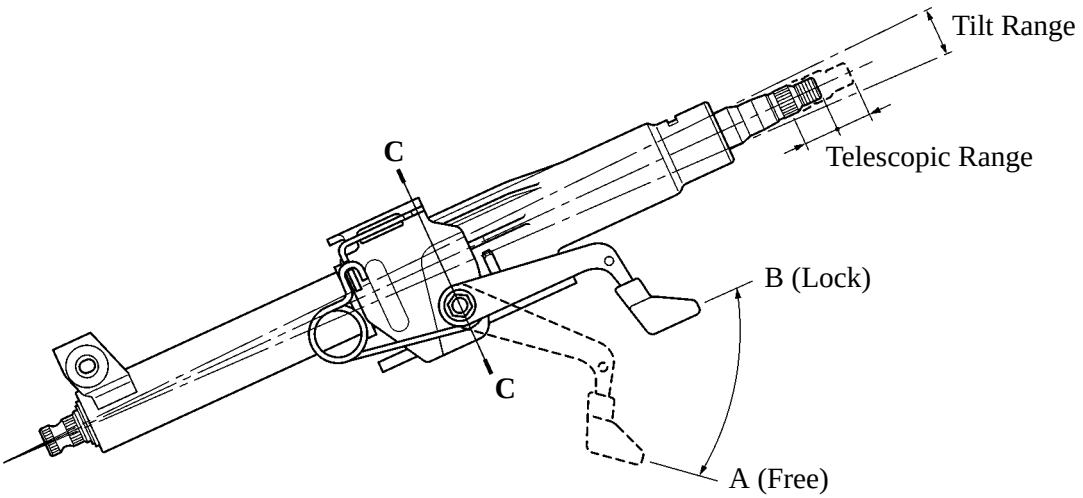

025CH64TE

▶ C - C Cross Section ◀

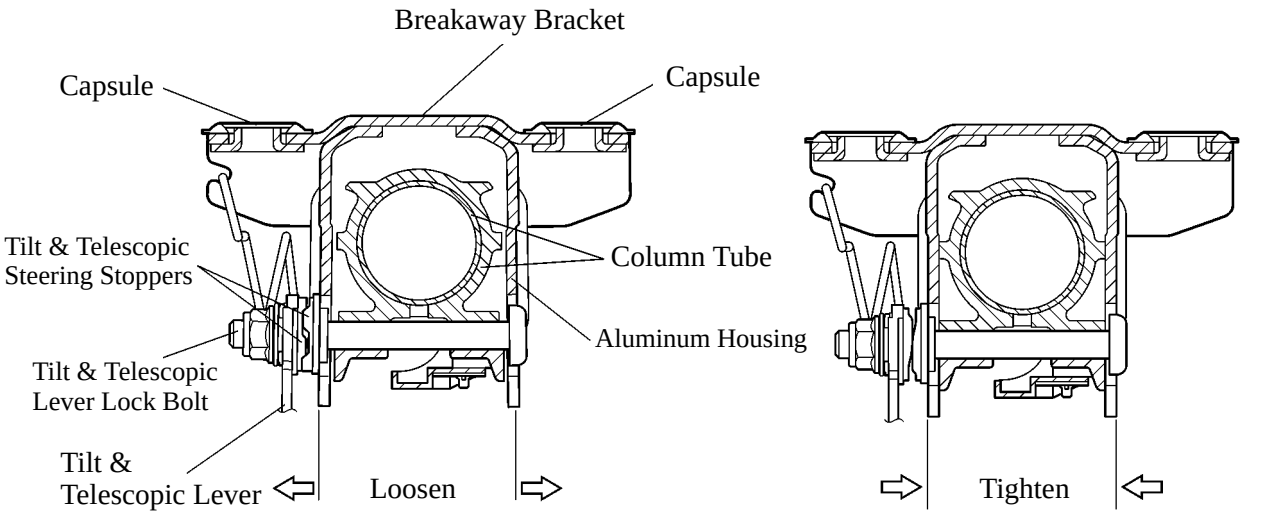

025CH65TE 025CH66TE

Free **Lock**

2. Energy Absorbing Mechanism

Construction

The steering column has three energy absorbing mechanisms.

The intermediate shaft and the main shaft are joined by a serrated engagement of fine vertical teeth. Energy is absorbed by the contraction of the engagement.

The breakaway bracket is bolted to the instrument panel reinforcement via a capsule. The breakaway bracket and the capsule are held with the washer. When, due to the column tube contraction, the breakaway bracket separates from the capsule, energy is absorbed by the friction resistance generated.

The contraction mechanism of the steering column tube absorbs energy by the frictional resistance caused by the aluminum housing and the column tube.

Operation

When the steering gear box moves during a (primary) collision, the intermediate shaft contracts, thus reducing the chance that the steering column and the steering wheel protrude further into the cabin.
When an impact is transmitted to the steering wheel in a (secondary) collision, the steering wheel and the driver's airbag help absorb the impact. In addition, the breakaway bracket separates, and the column tube contracts. This sequential energy absorbing mechanism helps absorb the impact of the secondary collision.

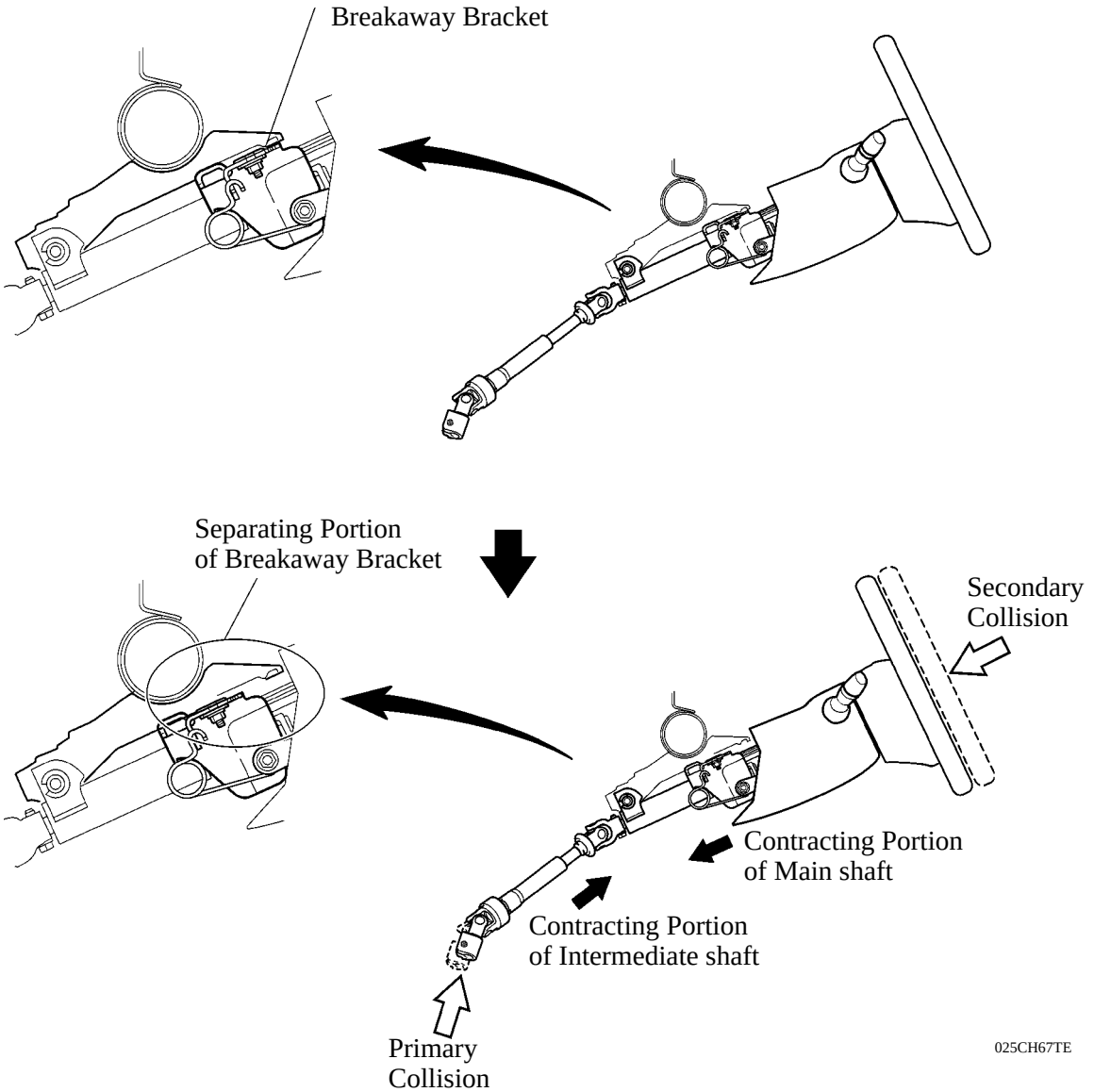

■STEERING LOCK SYSTEM (Only for Models with Smart Key System)

According with the use of the smart key system, a steering lock system which uses a lock/unlock motor to lock and unlock the steering wheel is used. This system mainly consists of the steering lock assembly, main body ECU, certification ECU and ID code box.

The steering lock ECU is integrated in the steering lock assembly, and it controls the lock bar operation in the steering lock assembly through the control of lock/unlock motor.

The steering lock ECU detects the position (lock/unlock) of the lock bar and transmits this information to the main body ECU and certification ECU.

In this system, the certification ECU determines whether to lock or unlock the steering based on communication with the main body ECU. Then, the certification ECU sends lock or unlock command signals to the steering lock ECU through the ID code box. Upon receiving the signals, the steering lock ECU operates the lock/unlock motor to lock or unlock the steering. For details, see page BE-91.

▶ System Diagram ◀

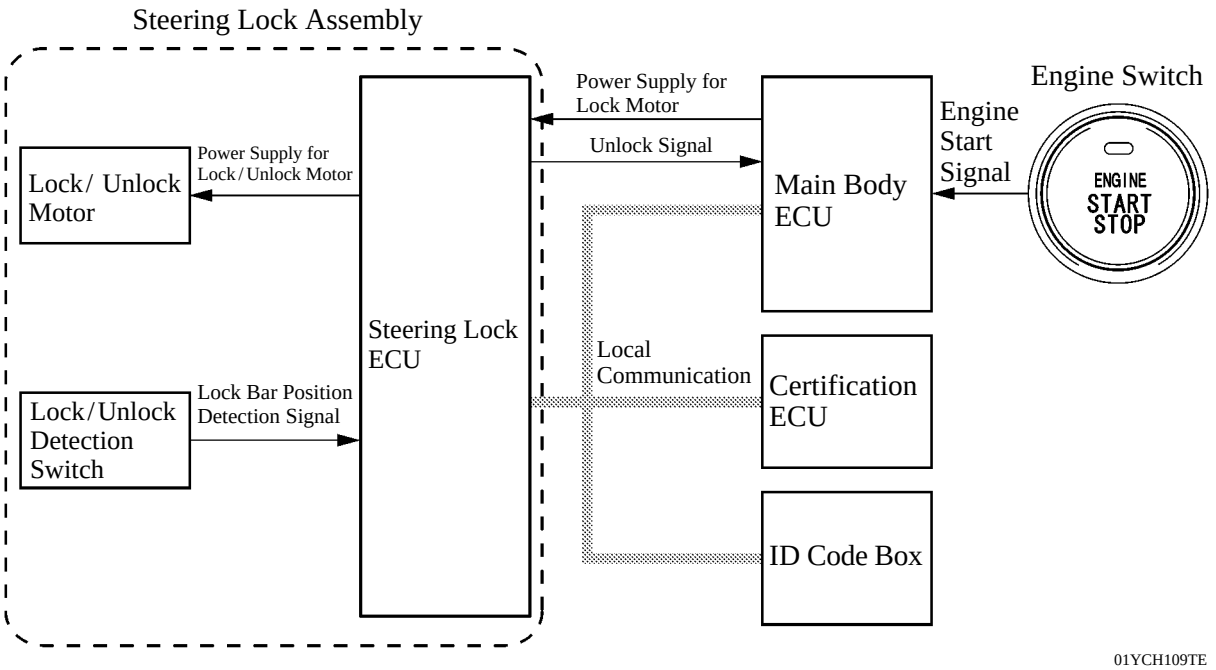

Service Tip

It is not possible to replace only the steering lock ECU in the steering lock assembly. Therefore, if a malfunction occurs in the ECU, the entire steering lock assembly must be replaced.

- MEMO -

BODY

BODY STRUCTURE

●LIGHTWEIGHT AND HIGHLY RIGID BODY

1. High Strength Sheet Steel

▶High strength sheet steel is used in order to ensure body rigidity and realize a lightweight body.

▶In the front pillar reinforcement, center pillar reinforcement and rocker members, ultra high strength sheet steel is used.

▶Ultra high strength sheet steel has approximately 1.3 times the strength of conventional high strength sheet steel. Therefore, to provide the same strength of high strength sheet steel, a weight reduction of approximately 25% can be realized.

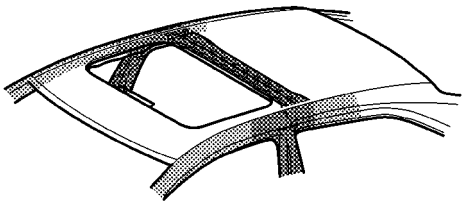

Sliding Roof

: High Strength Sheet Steel

: Ultra High Strength Sheet Steel

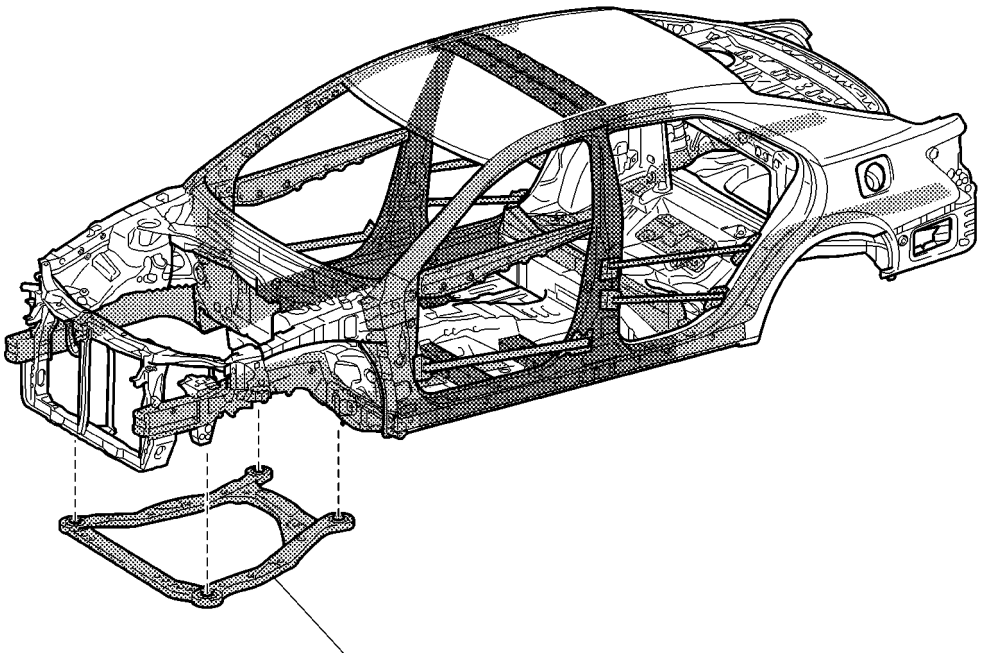

025BO01TE

Front Sub Frame

2. Brace

▶ Excellent maneuverability and stability has been achieved by providing a cowl top outer panel for the front suspension tower.

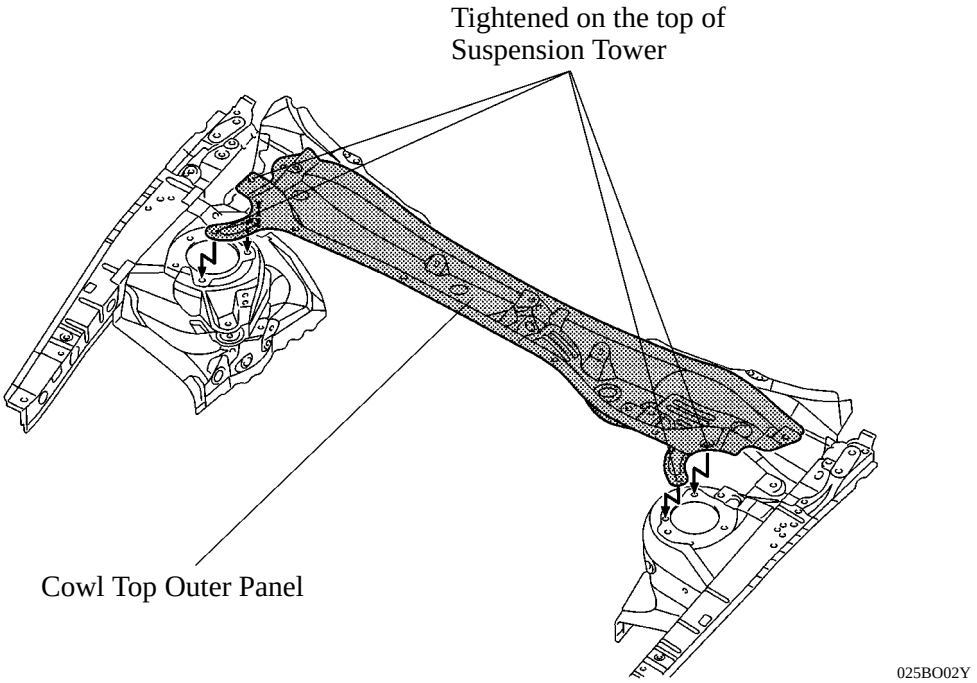

▶ For the XLE glade models and SE grade models, A V-shaped brace has been provided between the rear suspension tower and the floor. As a result, the body rigidity has been enhanced and excellent maneuverability and stability have been realized.

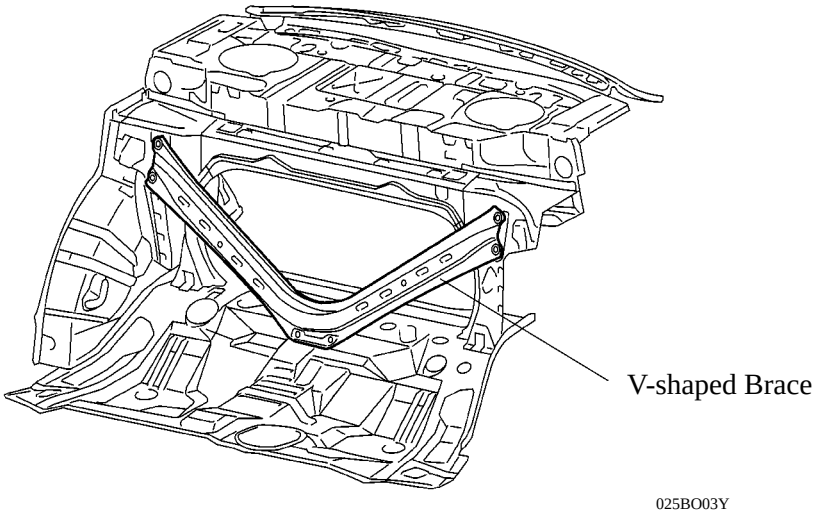

▶ High body rigidity has been achieved through the use of front floor braces between the front floor under reinforcement and rear floor side members for SE grade models.

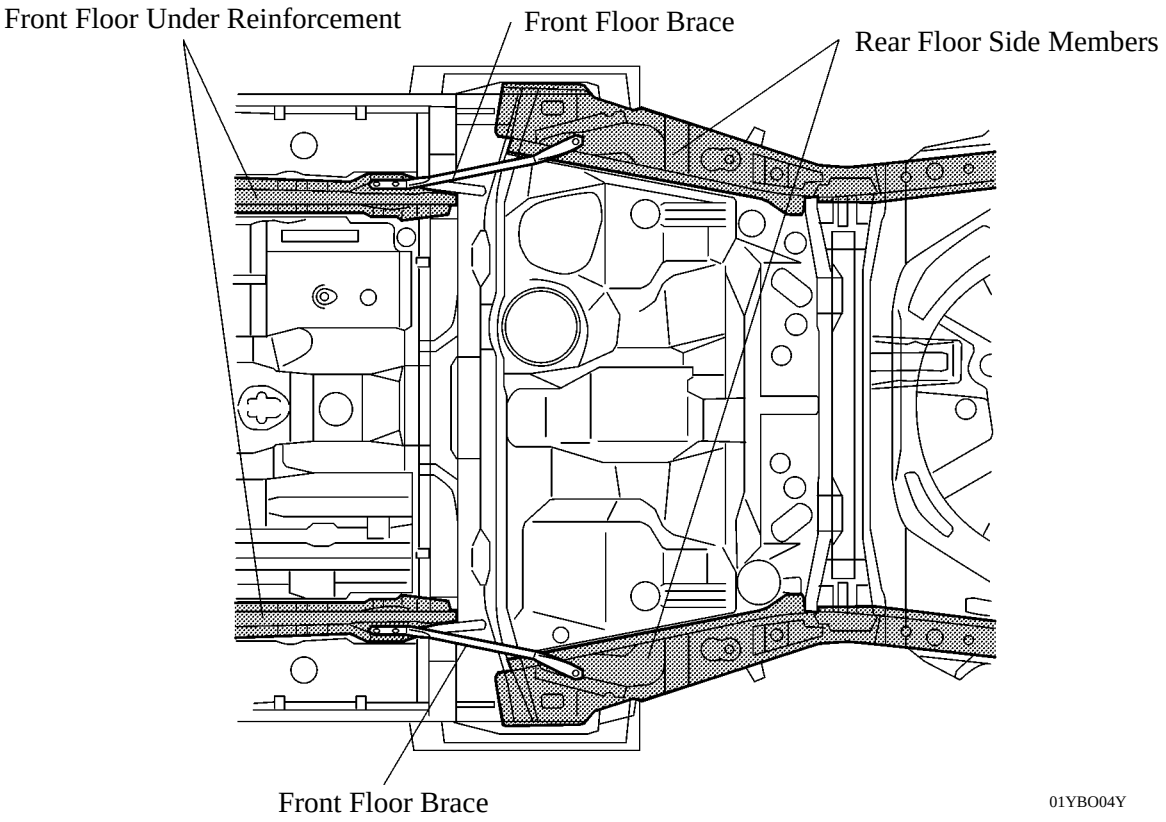

View from Bottom Side

●SAFETY FEATURES

1. General

The impact absorbing structure of the ’07 Camry minimizes cabin deformation by effectively helping to absorb the impact energy in the event of a front, side or rear collision. This provides high-performance occupant protection.

2. Impact Absorbing Structure for Front Collision

An optimal arrangement of the basic frame and reinforcements helps to minimize cabin deformation in the event of a collision.

▶ The body disperses the impact force in the event of an offset frontal collision.

▶ The body strengthens inner door reinforcements and reduces the gap between the door inner panel and the pillar. This communicates impact load to the door belt line reinforcement, reducing the load on the pillar in the event of an offset frontal collision.

▶ The floor side of the front side member and the inside of the floor side member reinforcements have been used, minimizing the cabin deformation.

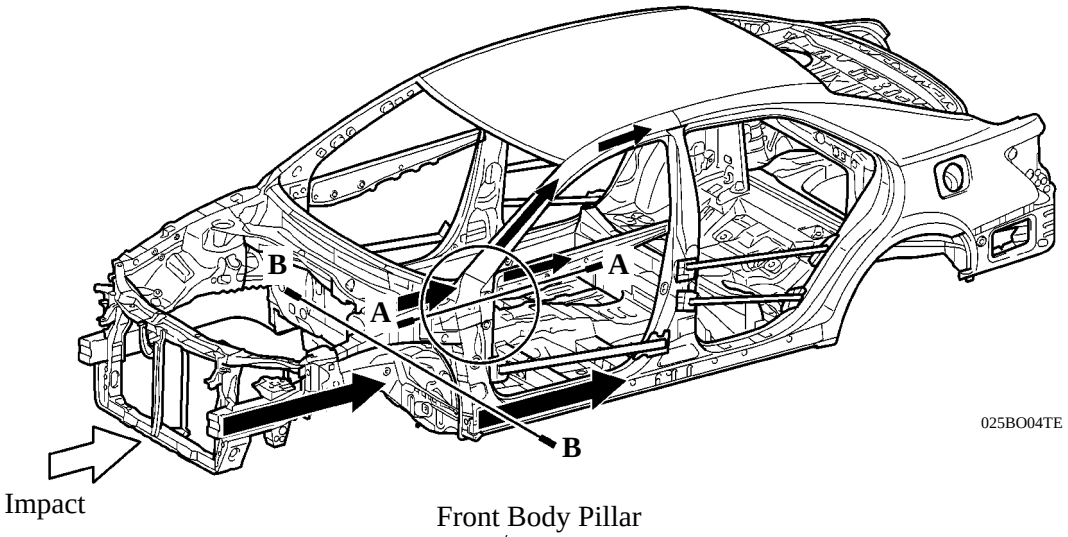

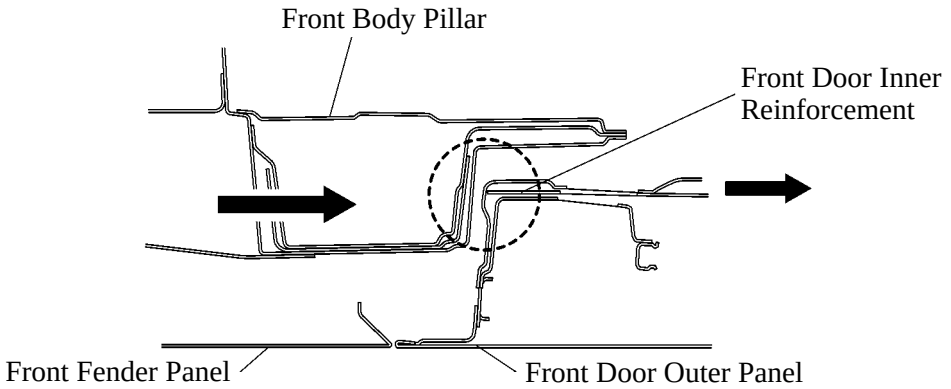

A - A Cross Section

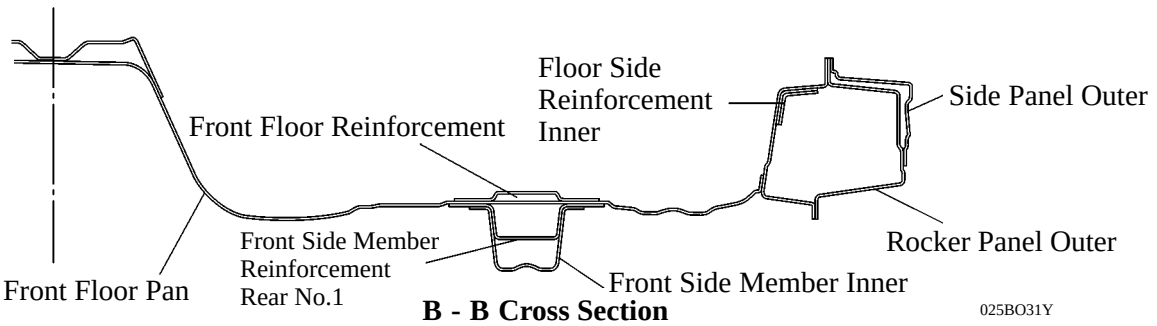

B - B Cross Section

3. Impact Absorbing Structure for Side Collision

The impact energy of a side collision directed to the cabin area is dispersed throughout the body via the pillar reinforcements, side impact protection beams, and floor cross members, thus helping minimize the impact energy finally directed to the cabin.

- ▶ In order to obtain optimal bearing force, ultra high strength sheet steel is employed in the center pillar reinforcement as described on page BO-2, furthermore, box-shaped reinforcement is used inside the center pillar (A - A cross section).
- ▶ Ultra high strength sheet steel is used in the roof reinforcement. In addition, the structure has been made to bear impact loads with both side rails (B - B cross section). This reduces the intrusion of the roof rail into the cabin in the event of a side collision.
- ▶ A bulk is used for the rear door inner and a gusset is used for the center floor cross member on the cabin interior side. When a side collision occurs, loads are conducted from the bulk to the gusset, deformation of the vehicle body is minimized (C - C cross section).

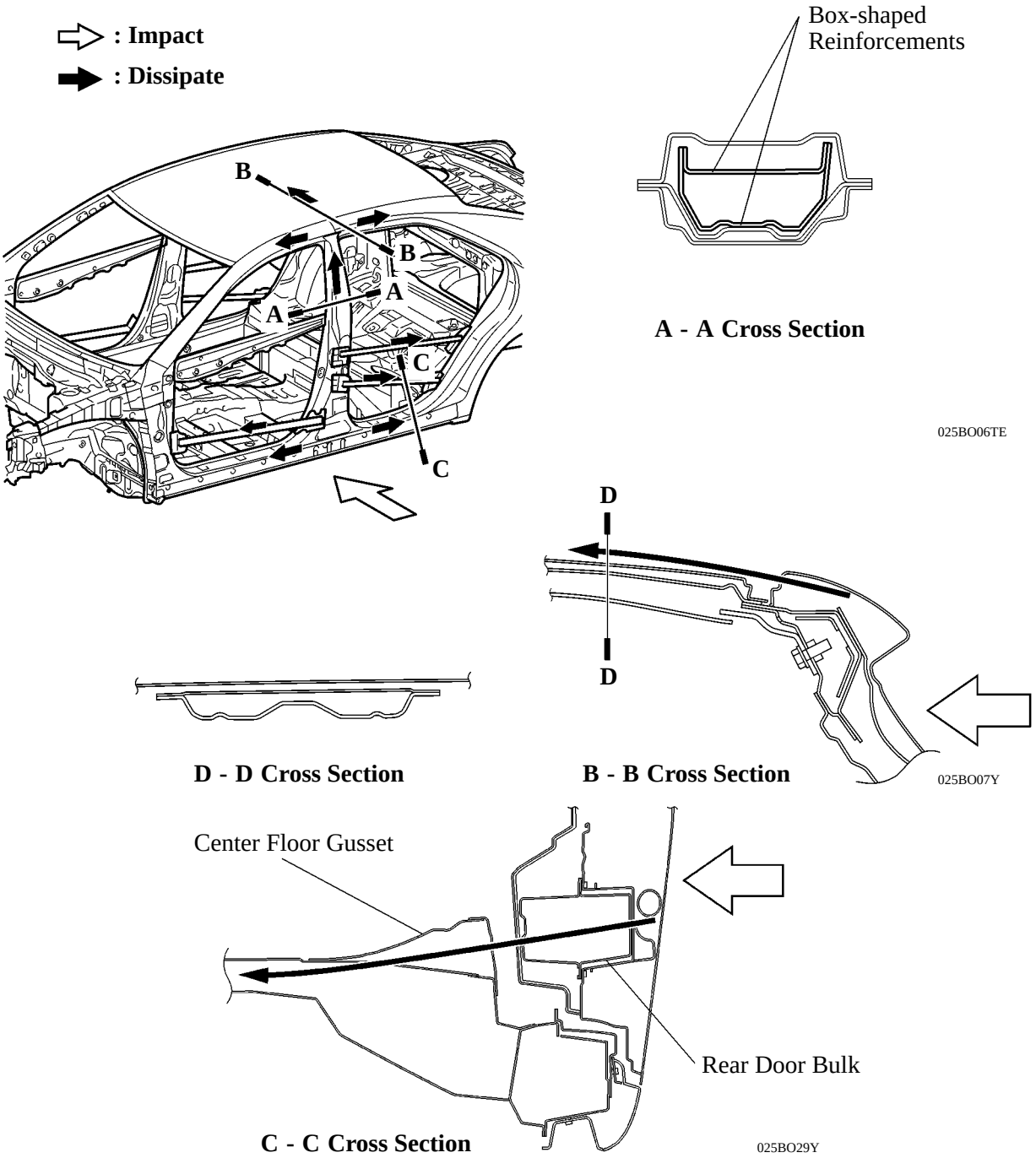

▶Seat pipes and seat pads have been provided on the front seat pillar frame for load conduction. Furthermore, the tunnel box has been reinforced. Thus, input load is conducted from the pillar and door to the seat, tunnel box and opposite seat, minimizing deformation of the body.

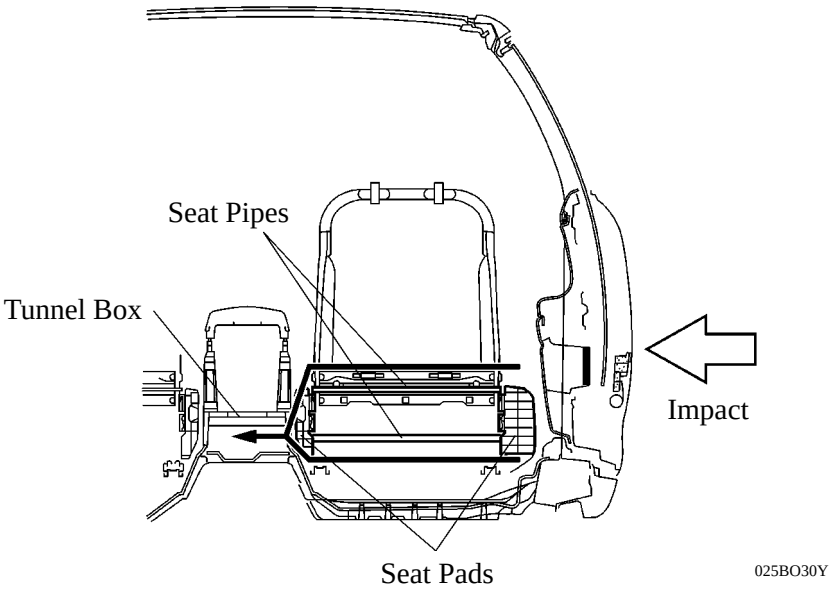

▶A head impact protection structure is used. With this type of construction, if the occupant's head hits against the roof side rail or pillar due to a collision, the inner panels of the roof side rail, roof area and pillar collapse to help reduce the impact.

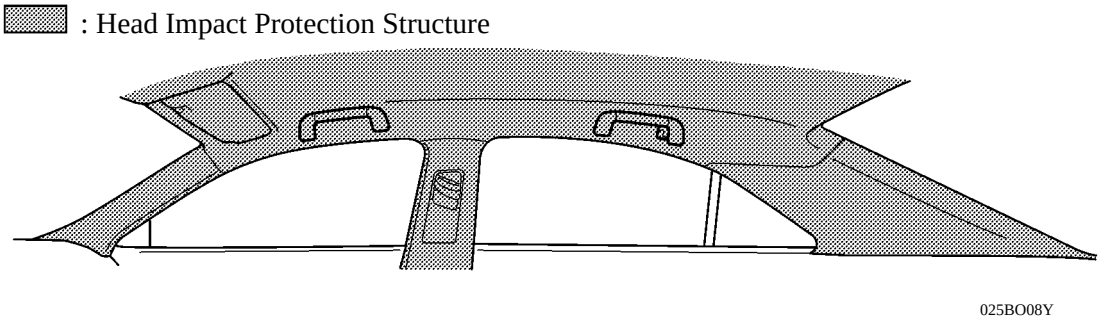

4. Impact Absorbing Structure for Rear Collision

Rear floor side members and reinforcements have been optimally allocated to control body deformation mode during a collision.

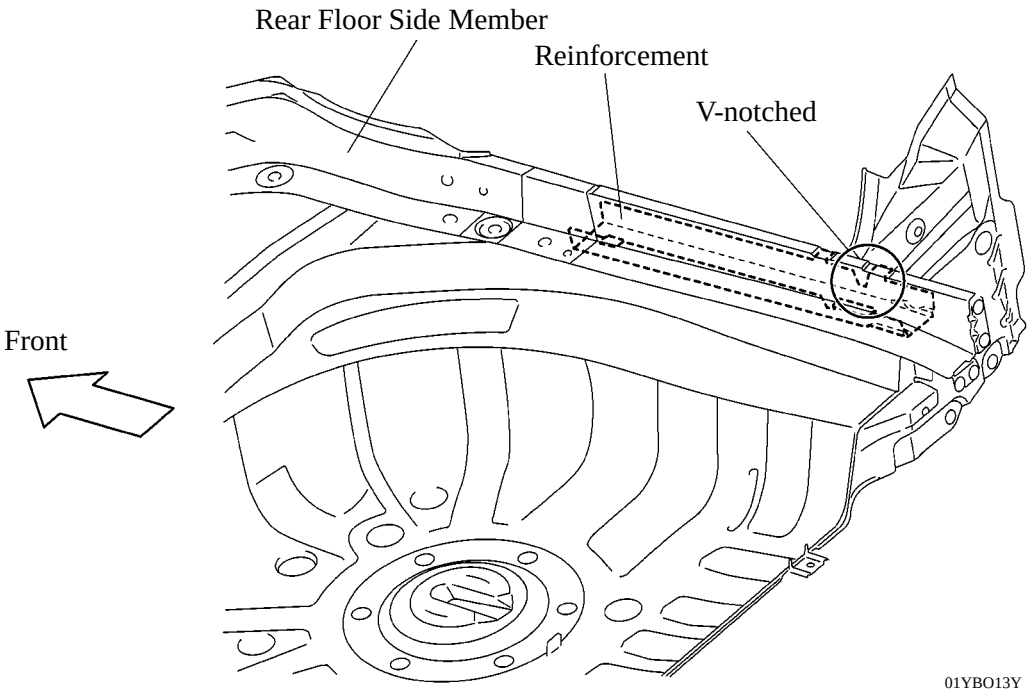

5. Lessening Pedestrian Head Injury

▶ A longitudinal frame is used as the principle structure of the hood inner, giving uniform rigidity to the hood surface.

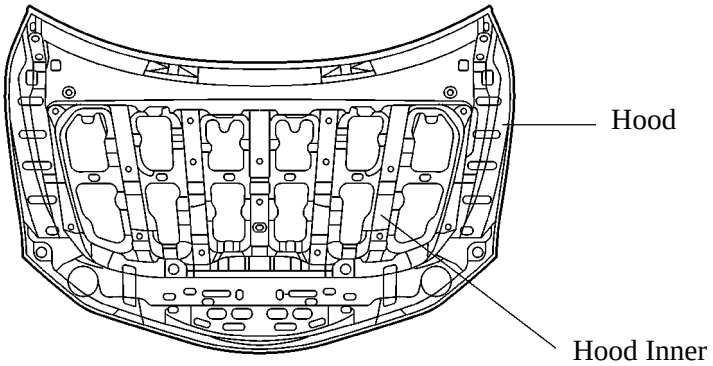

025BO09Y

▶ The rear wall of the cowl has been opened, so that it can easily collapse in the direction of an impact. Thus, a completely collapsible structure has been realized.

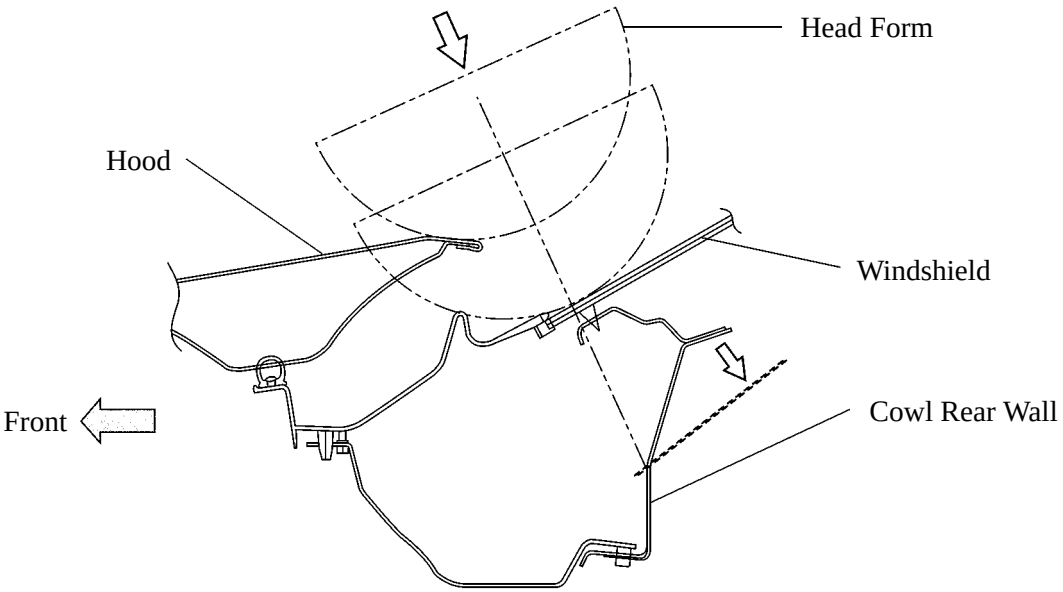

Cross Section at Lower Potion of Windshield

025BO11Y

▶ Energy absorbing brackets are used in the joint portion of the front fender. Thus, a certain deformation stroke in the event of a head form collision has been ensured, reducing the impact.

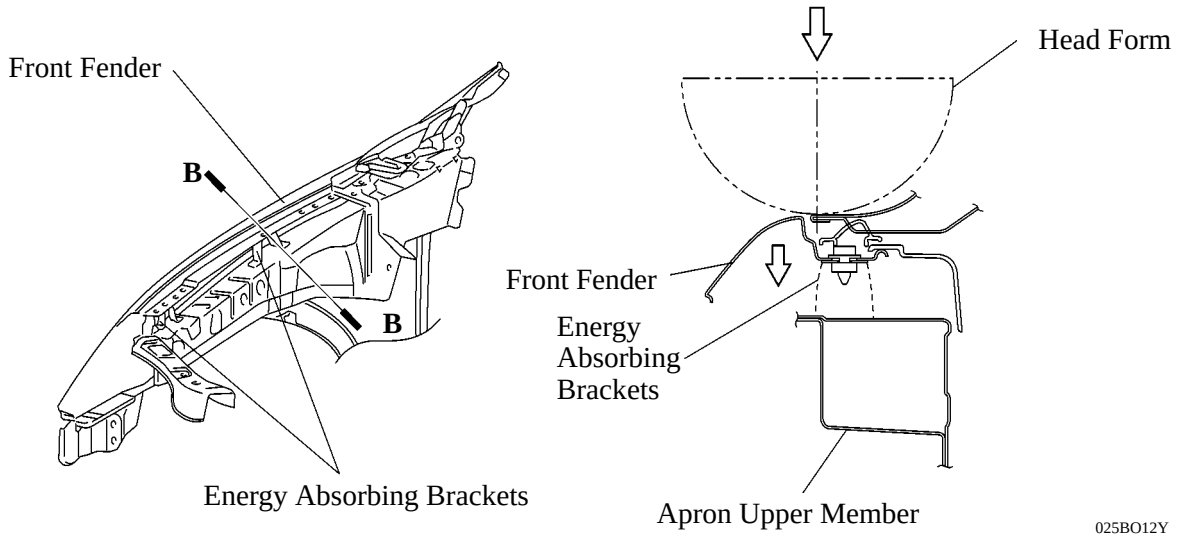

B - B Cross Section

▶RUST-RESISTANT BODY

1. General

Rust-resistant performance is enhanced extensive use of anti-corrosion sheet steel, as well as by an anti-corrosion treatment that includes the application of anti-rust wax, sealer and anti-chipping paint to easily corroded parts such as the hood, doors.

2. Anti-corrosion Sheet Steel

Anti-corrosion sheet steel is used as the following illustration.

: Anti-corrosion Sheet Steel

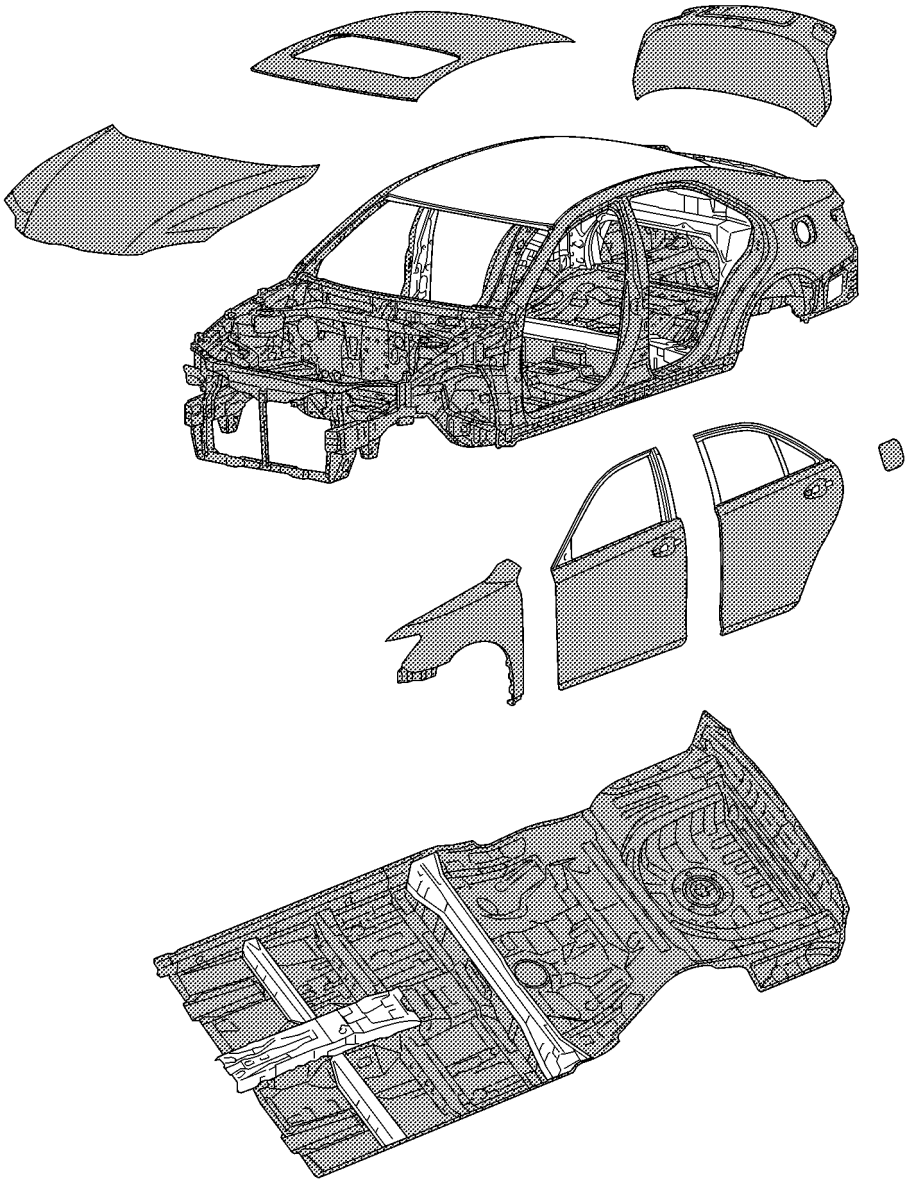

025BO13Y

3. Wax and Sealer

Wax is applied to edge of the hood, door lower portion, door hinge and fuel filler lid hinge to improve rust-resistant performance. Sealer is applied to hemmed portions of the hood, door panels and luggage door.

4. Under Coat

Acrylic acid resin is applied to under side of the body, inside the rear wheel housing and other parts that are susceptible to stone chipping damage, thus improving the rust-resistant performance of these areas.

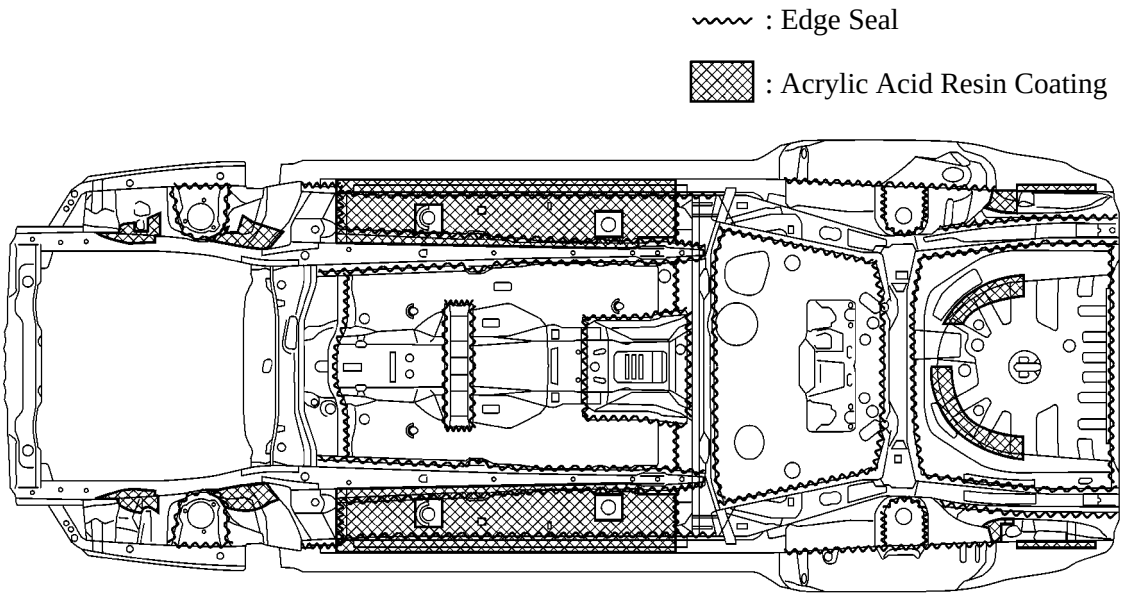

View from Bottom Side

025BO14Y

5. Anti-chipping Application

Soft-chip primer has been applied to the front end of the hood and the lower end of the door. Furthermore, large rocker moldings are used on all models as standard equipment in order to ensure chip resistance performance in the rocker panel.

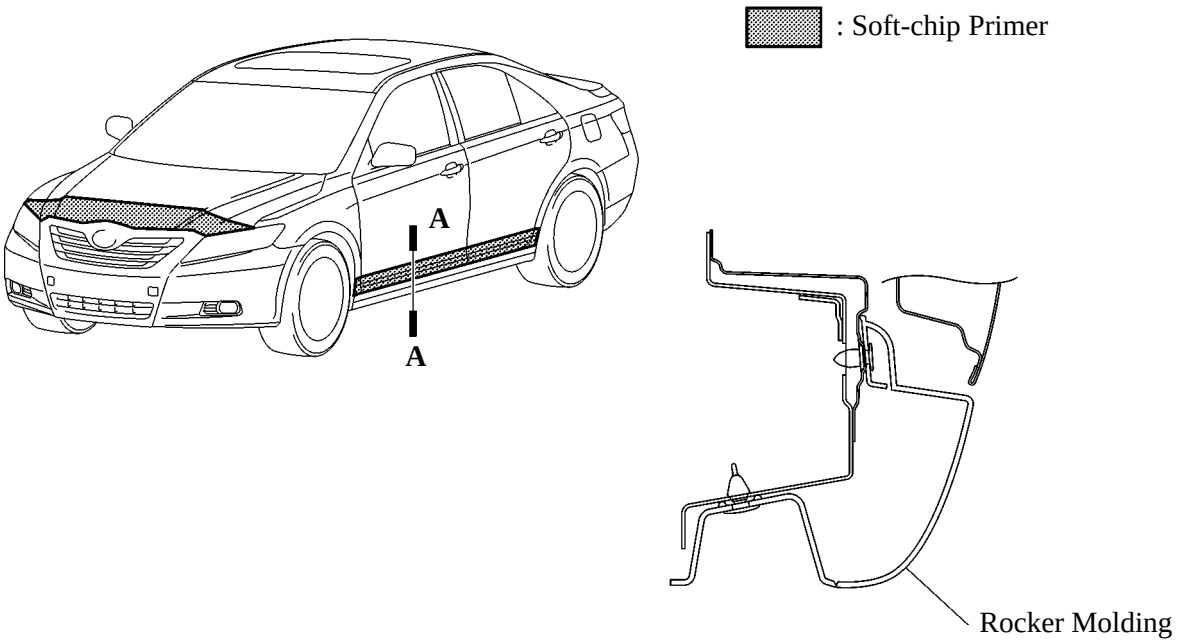

A - A Cross Section

025BO15Y

●LOW VIBRATION AND LOW NOISE BODY

1. General

Effective application of vibration damping and noise suppressant materials reduces engine and road noise.

2. Sound Absorbing and Vibration Damping Materials

▶Foamed urethane sponge and foamed sealing material are applied onto the roof panel and pillars to reduce wind and road noise.

▶A large-size dash inner silencer, dash outer silencer, hood silencer, and apron silencers and tunnel inner silencer are used to reduce engine and road noise and improve quietness inside the passenger compartment.

▶The rear fender liner, which is made of nonwoven felt, is fitted inside the rear wheelhouse in order to minimize grit, water and road noises.

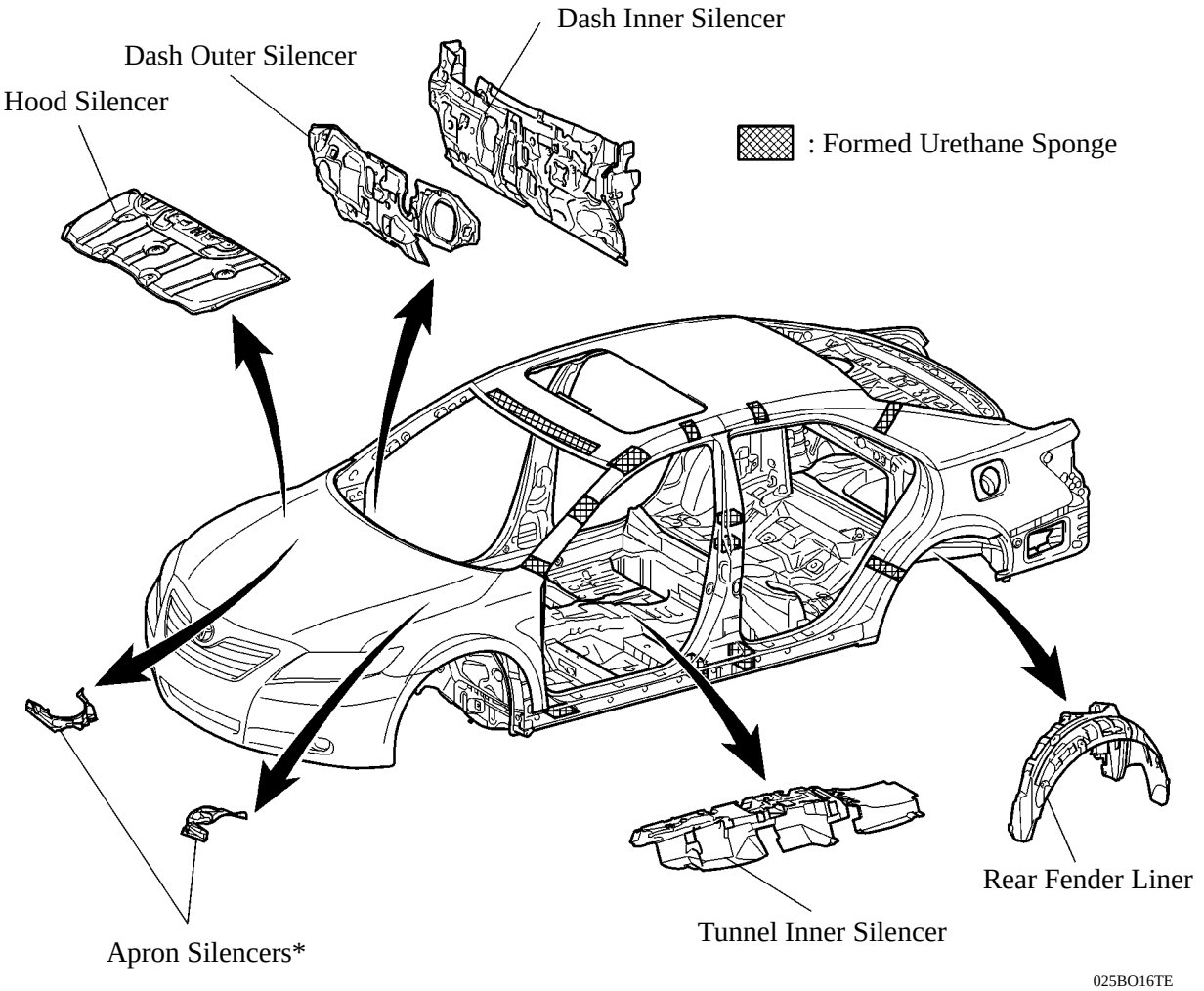

*: Only for 2GR-FE Engine Models

▶ In place of the asphalt sheet used on conventional models, a vibration damping foam coating is used on the floor of the new model to reduce road noise.

▶ The thickness of the vibration damping foam coating has been optimally adjusted for the individual portions. As a result, a lightweight coating has been realized.

: Coating Thickness 1.3 mm (0.05 in.)

: Coating Thickness 1.8 mm (0.07 in.)

: Coating Thickness 2.3 mm (0.09 in.)

: Coating Thickness 3.3 mm (0.13 in.)

: Coating Thickness 4.7 mm (0.19 in.)

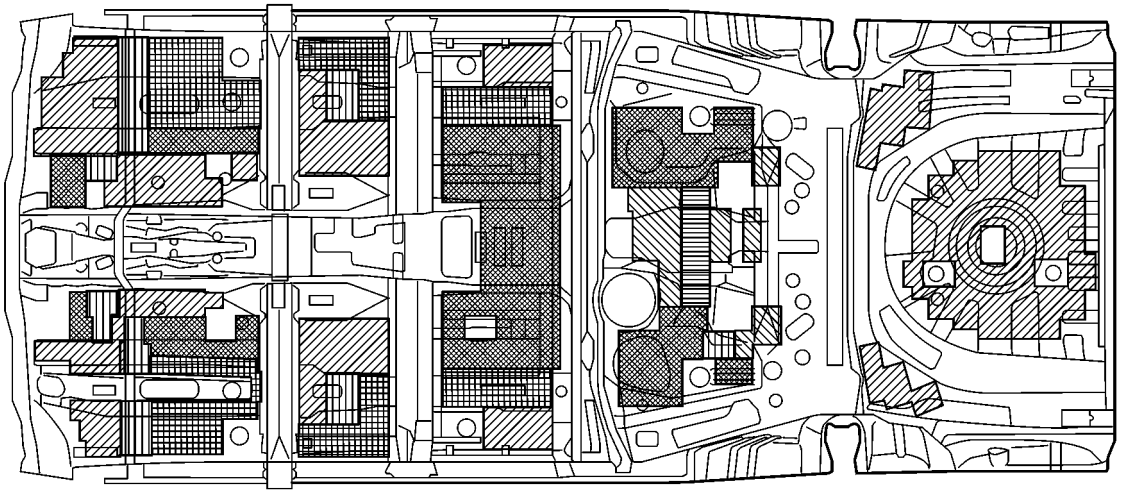

025BO17Y

View from Top Side

3. Reducing Wind Noise

▶ A structure that blocks the airflow is used in a portion of the door weather strip (at the front corner) in order to reduce wind noise (A - A cross section).

▶ The air turbulence has been eliminated through the use of the hood side seal rubber (B - B cross section).

▶ By streamlining the joins between the hood and windshield glass (C - C cross section) and between windshield glass and the roof (D - D cross section), air turbulence has been minimized.

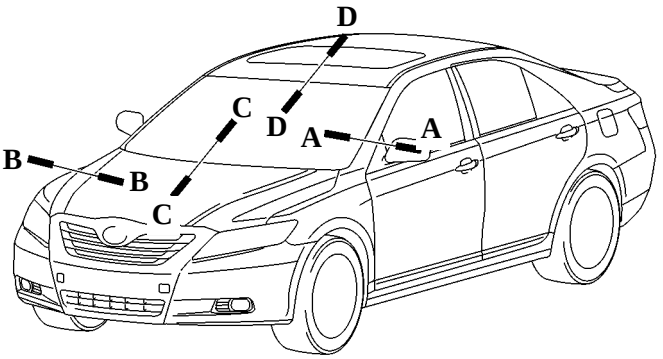

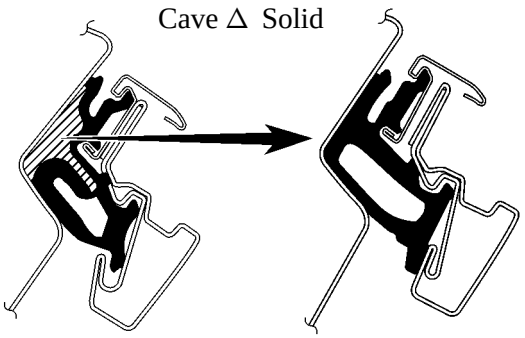

A - A Cross Section

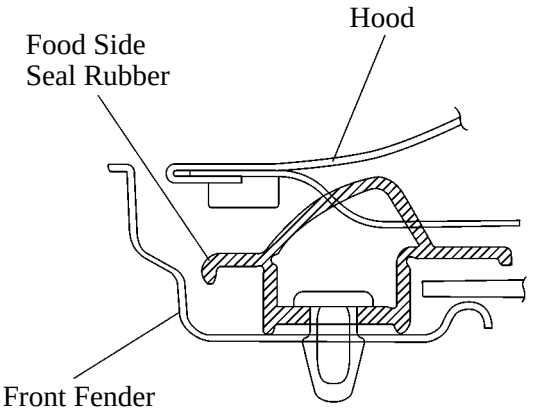

B - B Cross Section

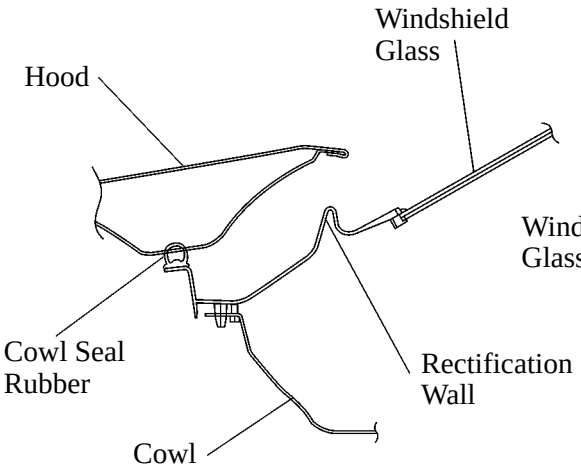

C - C Cross Section

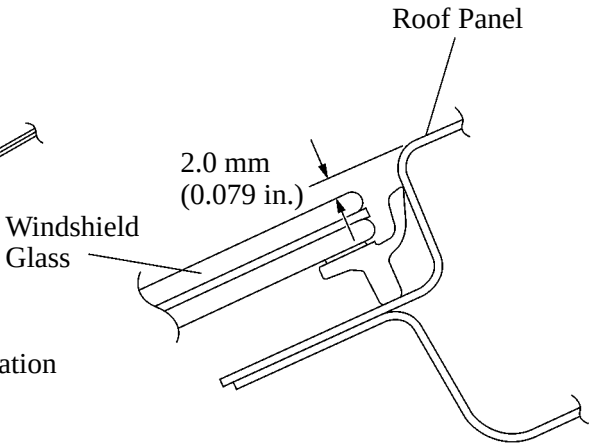

D - D Cross Section

025BO18Y

▶ Fender seals made of foamed resin are used between the front fender and the side member outer to prevent air from blowing through. (E - E cross section)

▶ Parting seals made of flexible resin are employed between the front and rear doors to eliminate air turbulence (F - F cross sections).

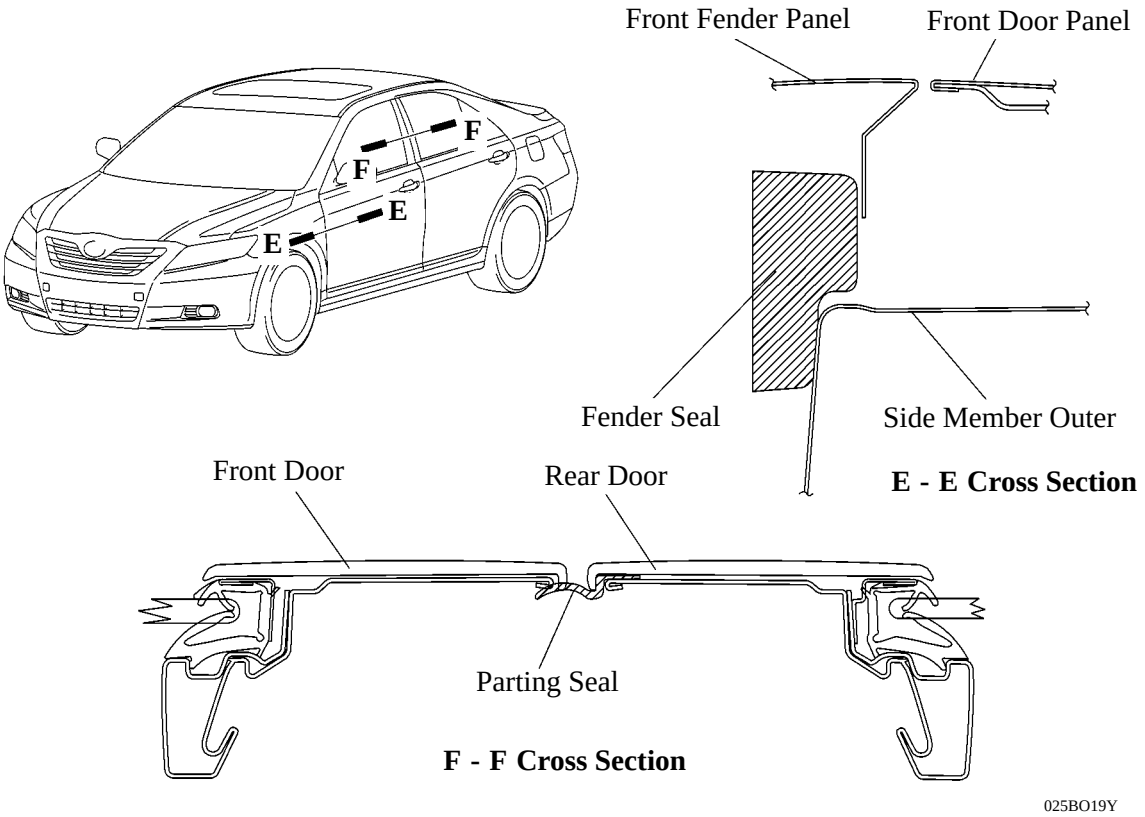

●AERODYNAMICS

To improve aerodynamic performance, the following measures have been taken.

▶Front and rear fairings are provided to smooth out the airflow around the tires and reduce the air resistance while the vehicle is in motion.

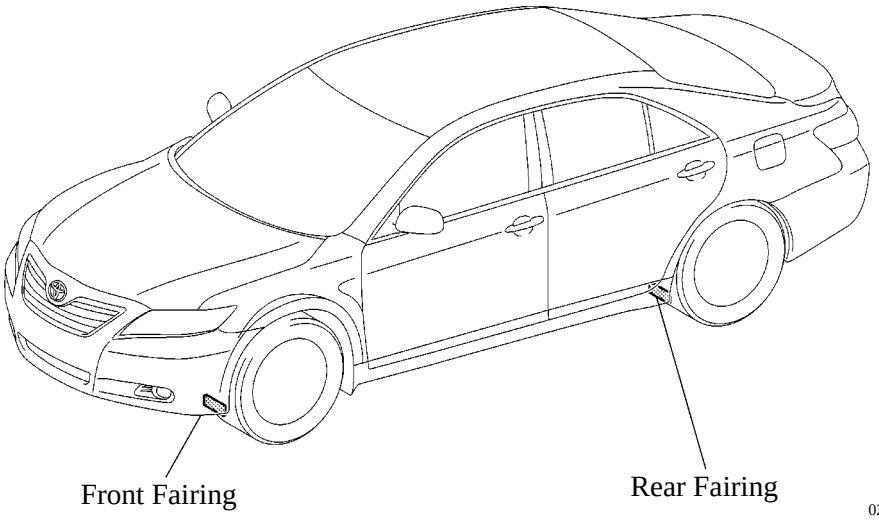

025BO20TE

▶The engine undercover has been formed into a step shape to increase the velocity of the air flowing underneath the vehicle. This creates a vacuum and suppresses the lift force, thus, excellent maneuverability and stability have been achieved.

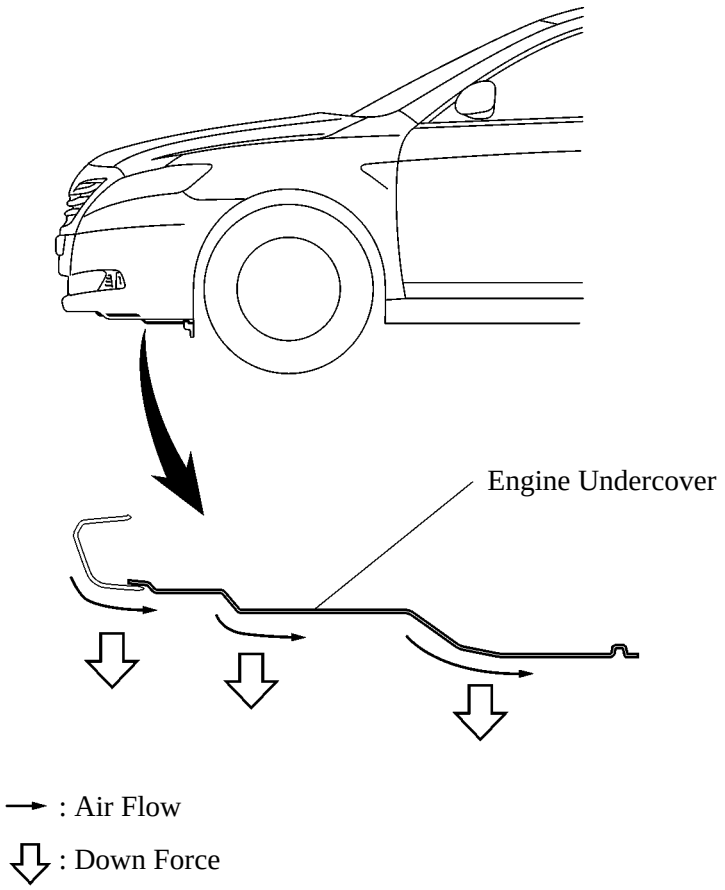

025BO21Y

▶ Excellent maneuverability and stability have been achieved by providing a rear floor under cover that is shaped to generate rectification and swirl effects on the rear floor (equipped with SE Grade models).

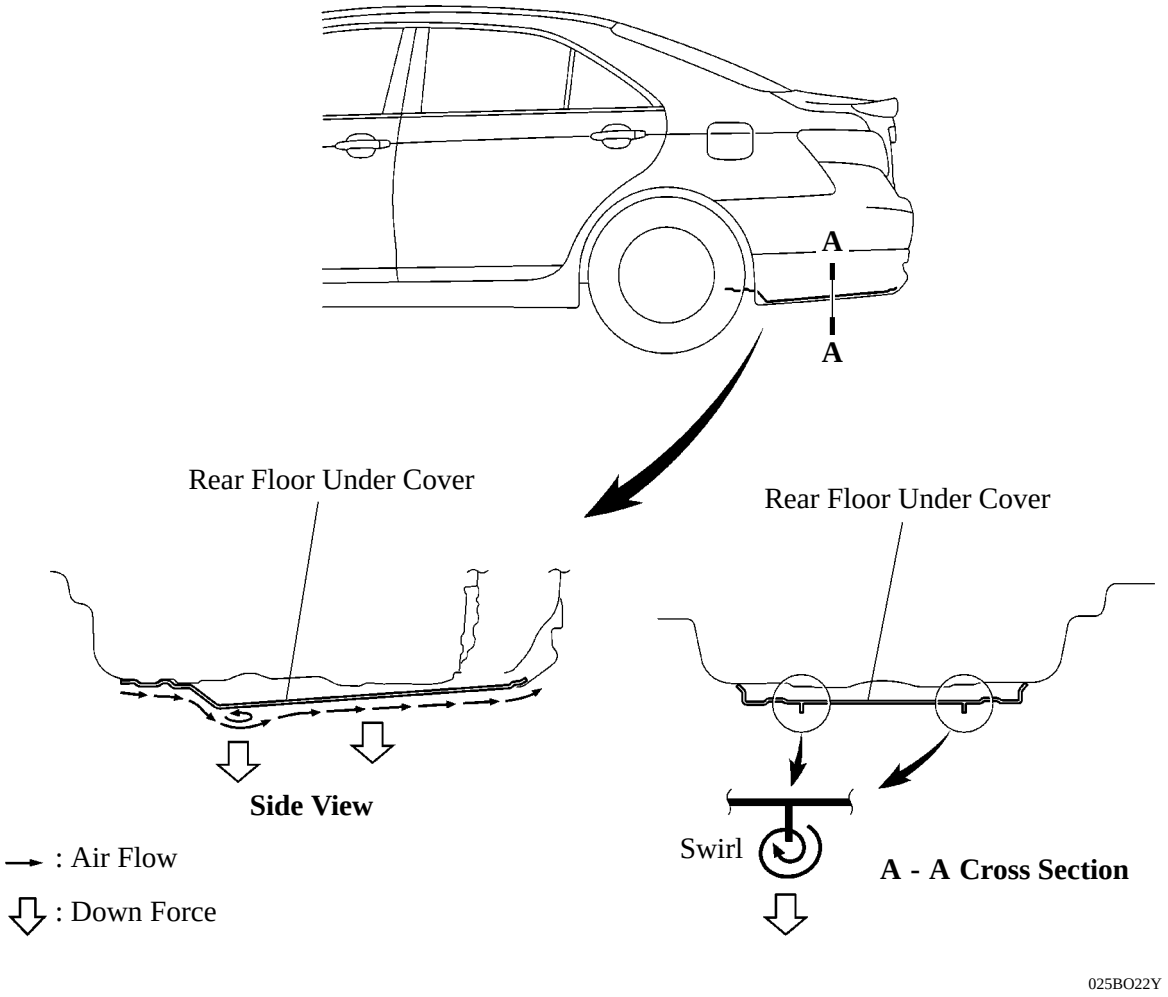

ENHANCEMENT OF PRODUCT APPEAL

●PARTS WITH LOW REPAIR COST

▶The plating portion of the front grille of XLE grade models has been redesigned as an individual part. As a result, replacing only damaged parts is possible, reducing repair costs.

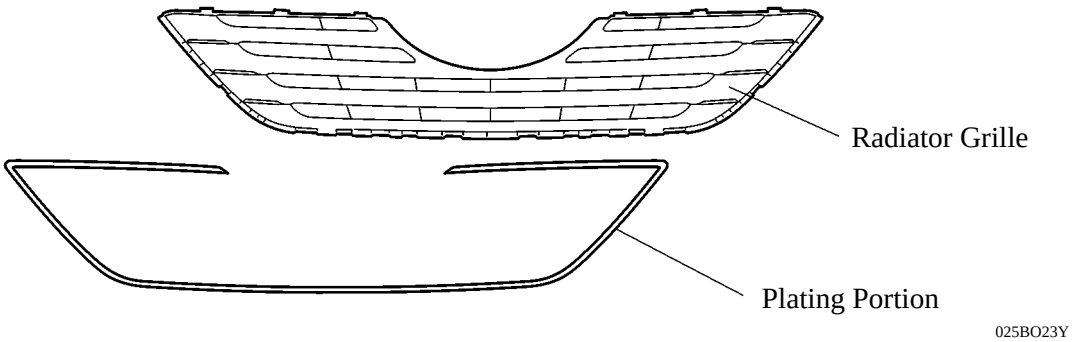

▶By reducing from 18 to 8 the number of fixing points used for installing the rear bumper cover onto the vehicle body, repair time has been shortened.

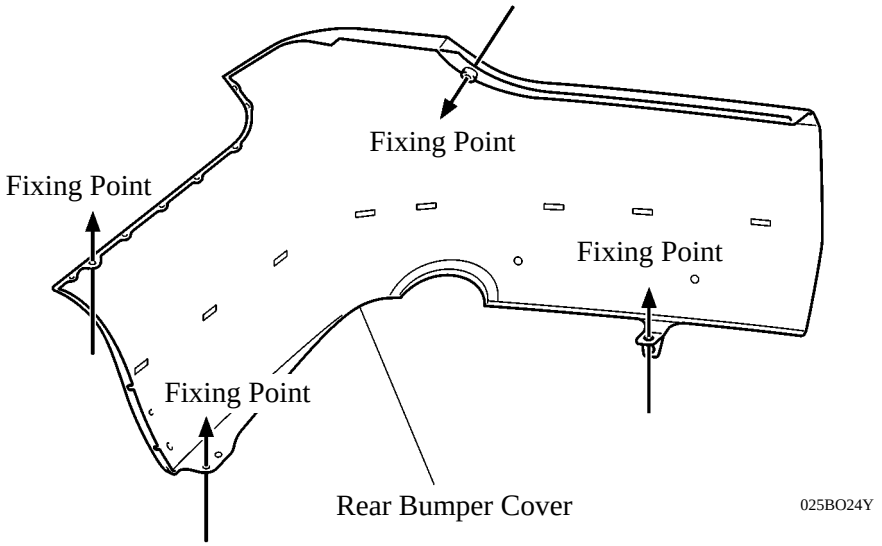

▶WASHER NOZZLE

Spray type washer nozzles are located under the engine hood to ensure good appearance. These nozzles can spray windshield washer fluid over a wide area by spraying it in a fan shape. The washer fluid volume has been reduced so as not to hinder the driver's view when washer system is operated.

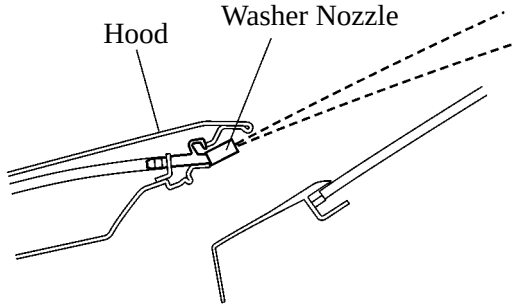

025BO25Y

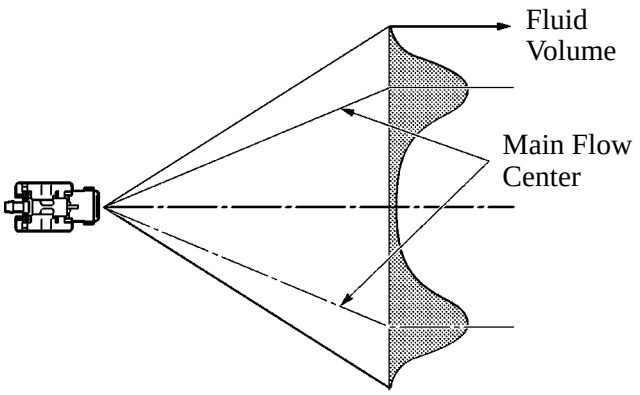

01YBO31Y

Service Tip

Spray type washer nozzles cannot be adjusted because of their structure. Do not attempt to adjust the nozzles as it could damage them.
If adjustment is necessary, adjust the nozzles after replacing them with those selected from five part numbers with different spray angles. For details, see the 2007 Camry Repair Manual (Pub. No. RM0250U).

▶WIPER ARM & BLADE

The unified construction of the wiper blade and arm is used. A fin-shaped resin cover is used for the entire wiper blade. This ensures the effectiveness of the wipers even when traveling at high speeds.

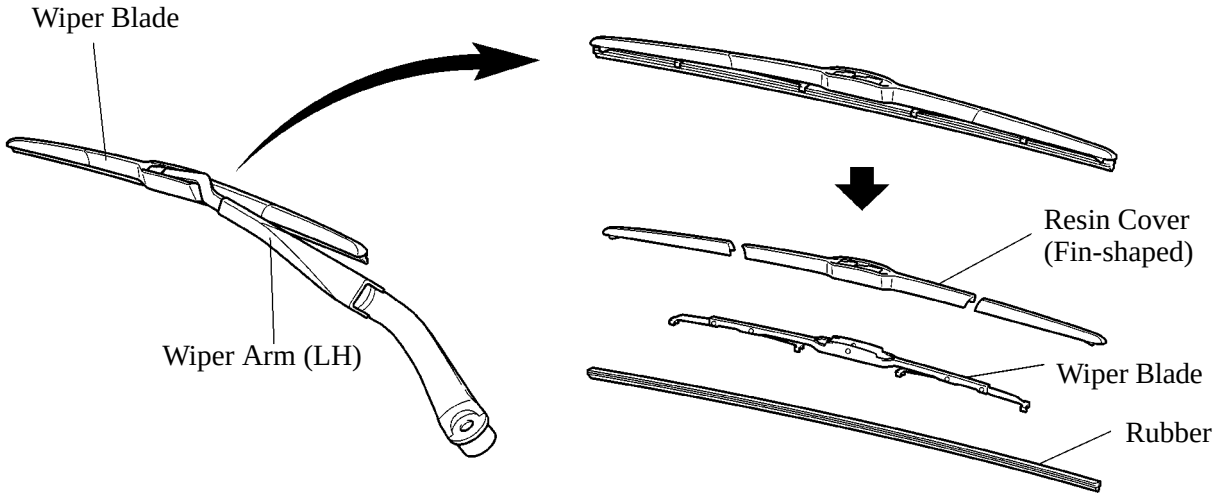

025BO26Y

▶INTERNAL TRUNK RELEASE HANDLE

In case a person is inadvertently locked inside the trunk and needs to get out, an internal trunk release handle is included inside the luggage room.
The handle is made of phosphorescent plastic, so that it is visible in the luggage room for a while even after the luggage room door has been closed.

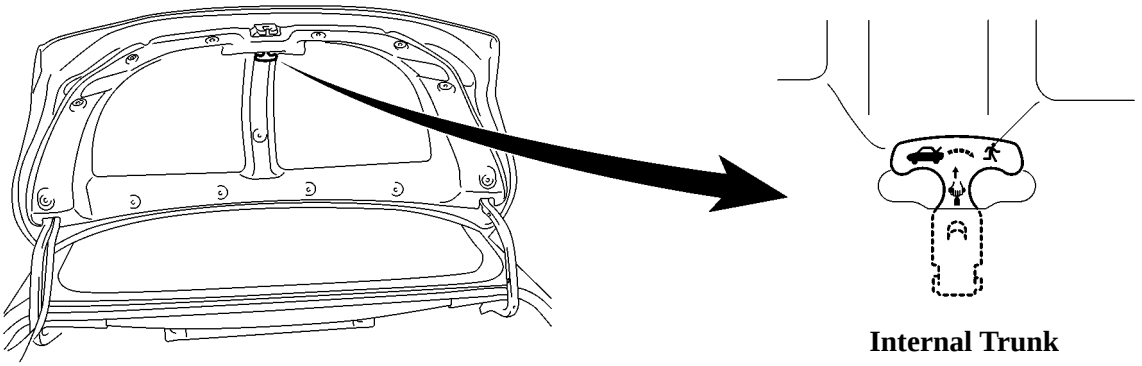

Internal Trunk Release Handle

025BO27TE

▶CHILD RESTRAINT SYSTEM

CRS (Child Restrain System) lower anchorage for securing child seats has been provided behind the seat cushion of the rear seat.
Three CRS anchor brackets for securing a child seat are provided above the package tray trim.

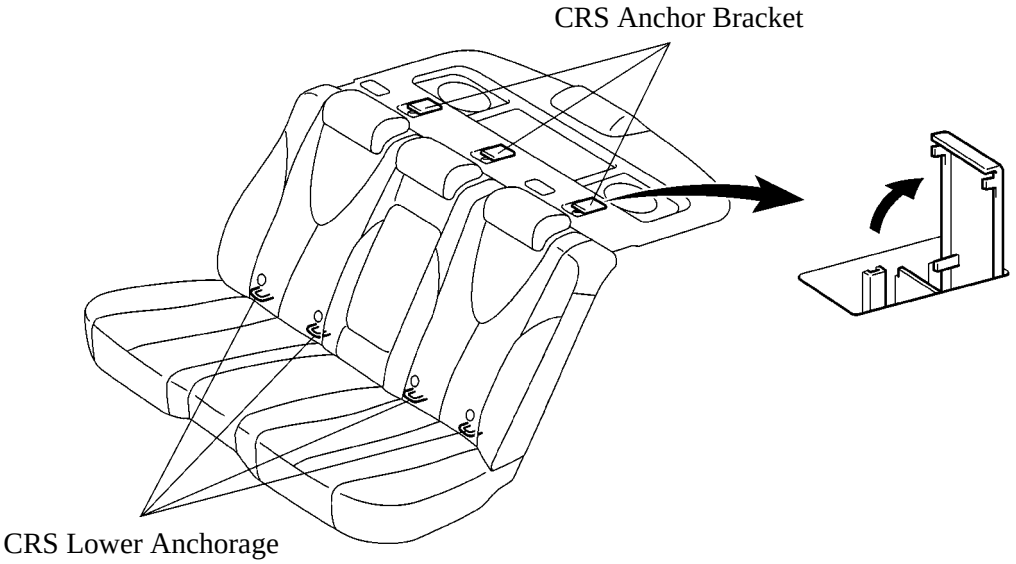

025BO28Y

SEAT BELT

1. General

The following types of seat belts are provided.

Seat Position	Seat Belt Type	Remarks
Driver	3-point ELR*1	Electrical Sensing type Pretensioner and Force Limiter
Front Passenger	3-point ELR*1& ALR*2	Electrical Sensing type Pretensioner and Force Limiter
Rear Passenger	3-point ELR*1& ALR*2	—

*1: Emergency Locking Retractor
*2: Automatic Locking Retractor

2. Pretensioner and Force Limiter

In accordance with the ignition signal from the airbag sensor assembly, the seat belt pretensioner activates simultaneously with the deployment of SRS airbag for the driver and front passenger.
In the beginning of the collision if the tension of the seat belt applied to the occupant reaches a predetermined level, the force limiter activates to control the force.
Even if the front passenger airbag is not deployed in accordance with the front passenger occupant classification system, the pretensioner and force limiter for the front passenger will be deployed.

▶ Front Airbag Operation ●

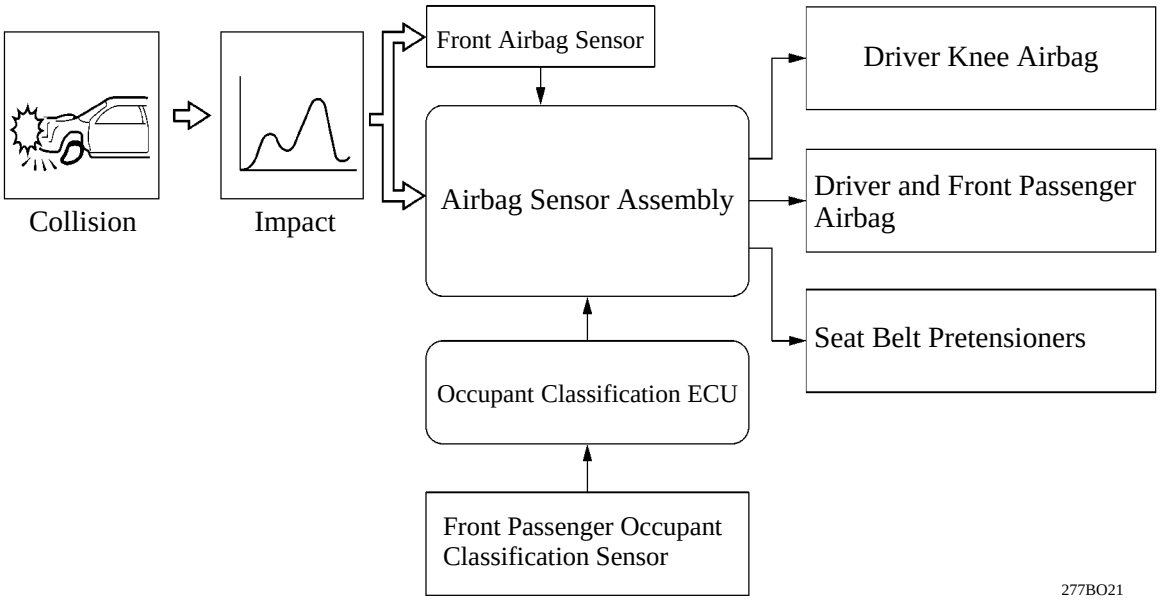

BODY ELECTRICAL

MULTIPLEX COMMUNICATION

▪ DESCRIPTION

The multiplex communication system of the ’07 Camry uses the 2 communication protocols described below in order to achieve a streamlined wiring harness configuration.

- CAN (Controller Area Network): Classified into two types according to communication speed, the HS (High Speed)-CAN is used for the power train, chassis and body electrical systems, and the MS (Medium Speed)-CAN is used for the body electrical system.
- AVC-LAN (Audio Visual Communication - Local Area Network): Used for communication only between the audio-visual systems.

The HS-CAN consists of the CAN No.1 bus and the MS-CAN consists of the MS bus. The main body ECU with gateway function is used to transmit data between the buses.

Due to the introduction of the CAN system for the power train, chassis and body electrical systems, the BEAN (Body Electronics Area Network) that is used for the body electrical system on some conventional models is not used on this model.

A customized body electronics system is used, enabling the control functions of the ECUs to be set using a hand-held tester. For details, see page BE-13.

▶ System Diagram ●

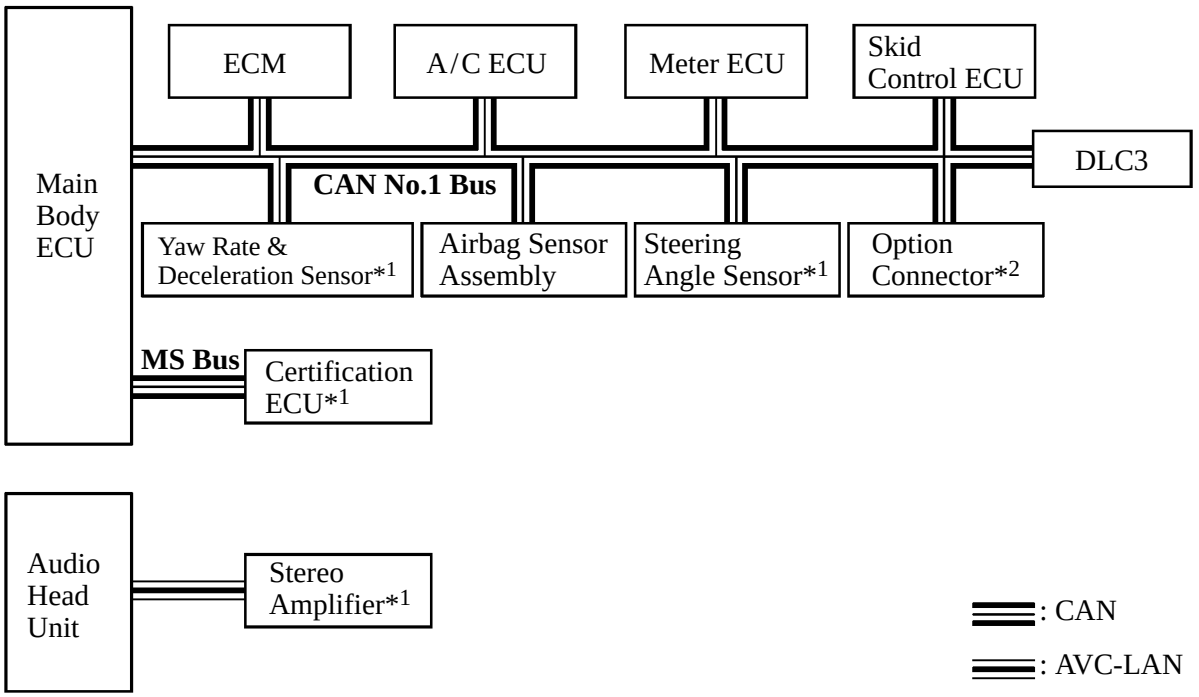

025BE01P

*1: Optional equipment

*2: The option connector is provided for connecting the bus buffer, which is designed for use with dealer option parts, to the CAN No.1 bus. When no dealer option parts are installed, it is not used.

— REFERENCE —

MPX communication uses serial communication data that consists of bits and frames in order to exchange information among the various ECUs. This allows a reduction of the amount of wiring on the vehicle.

A bit is the basic unit of communication that is used to represent the information. A bit is represented by binary values of "0" or "1".

A frame is a body of data that is transmitted together. A frame contains a header that indicates the beginning, and an end message that indicates the end.

▶ Conceptual Drawing ●

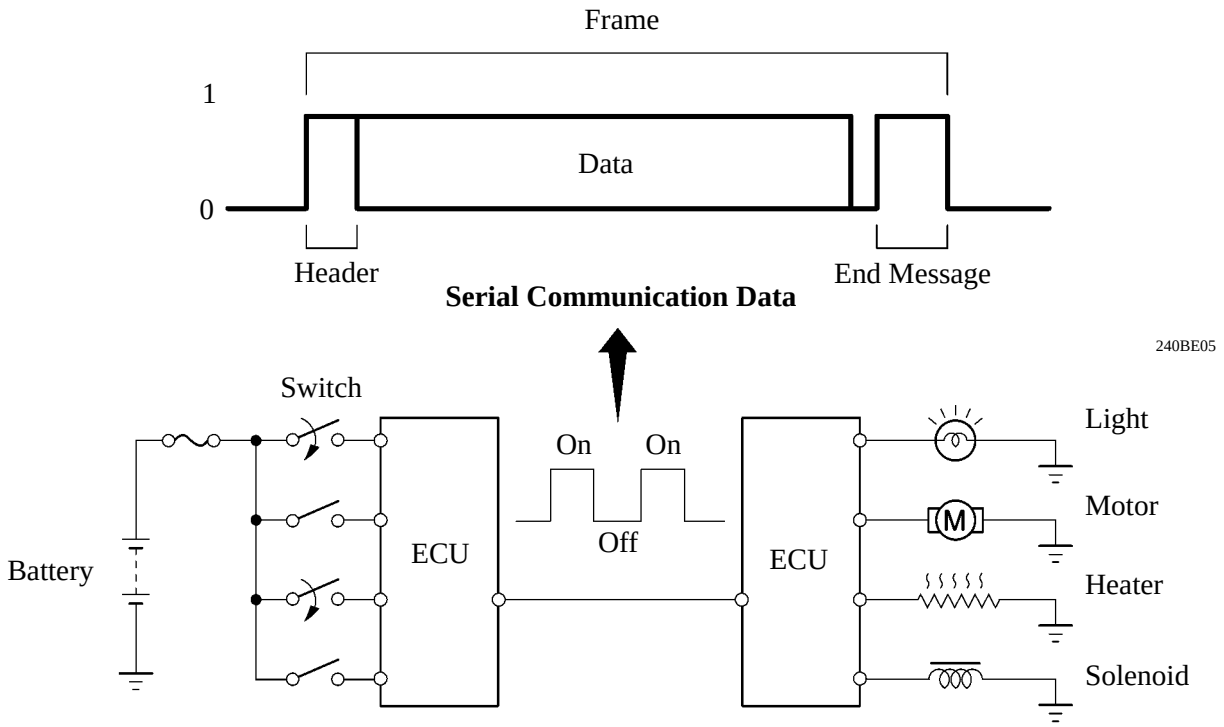

■DIFFERENCES BETWEEN CAN, AVC-LAN AND BEAN

1. General

The protocols, which are the rules for establishing data communication, differ between the CAN, AVC-LAN and BEAN*. If the ECUs in the networks use different frameworks for their data, such as communication speed, communication wire, and signals, they will be unable to understand each other. Therefore, protocols (rules) must be established among them.

Compared to the AVC-LAN and BEAN*, the CAN features high-speed data transmission. Therefore, the CAN is able to transmit larger amounts of data faster than other protocols. This feature makes it possible to transmit data accurately in the power train and chassis control system, which requires large amounts of data to be transmitted in short periods of time.

*: The BEAN is used in the body electrical system of the ’06 Camry and some other TOYOTA models, but is not used on the ’07 Camry.

Protocol	CAN (ISO Standard)	AVC-LAN (TOYOTA Original)	BEAN (TOYOTA Original)
Communication Speed	500 kbps*/HS-CAN 250 kbps*/MS-CAN (Max. 1 M bps)	Max. 17.8 kbps*	Max. 10 kbps*
Communication Wire	Twisted-pair Wire	Twisted-pair Wire	AV Single Wire
Drive Type	Differential Voltage Drive	Differential Voltage Drive	Single Wire Voltage Drive
Data Length	1-8 Byte (Variable)	0-32 Byte (Variable)	1-11 Byte (Variable)

*: bps: abbreviation for “Bits Per Second”, indicating the number of bits that can be transmitted per second.

2. Communication Wire

A twisted-pair wire is used for CAN and AVC-LAN communication. A single, AV (Automobile Vinyl) wire is used for BEAN* communication.

*: The BEAN is used in the body electrical system of the ’06 Camry and some other TOYOTA models, but is not used on the ’07 Camry.

Communication Wire	Outline
Twisted-pair Wire for CAN 241BE168	This communication wire is a pair of twisted lines. Communication is driven by applying 1.5 to 2.5 V and 2.5 to 3.5 V of voltage to the two lines in order to send a single signal. This system, which is called a “Differential Voltage Drive”, reduces noise.
Twisted-pair Wire for AVC-LAN 241BE168	This communication wire is a pair of twisted lines. Communication is driven by applying positive (+) and negative (-) voltages to the two lines in order to send a single signal. This system, which is called a “Differential Voltage Drive”, reduces noise.
AV Single Wire 240BE09	This is a lightweight single communication wire that consists of a single core line surrounded by insulation. Voltage is applied to this line in order to drive communication, and this system is called a “Single Wire Voltage Drive”.

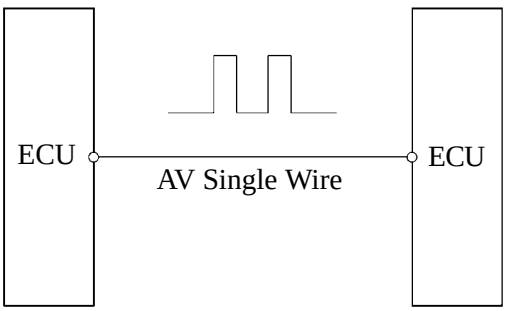

240BE11

Single Wire Voltage Drive

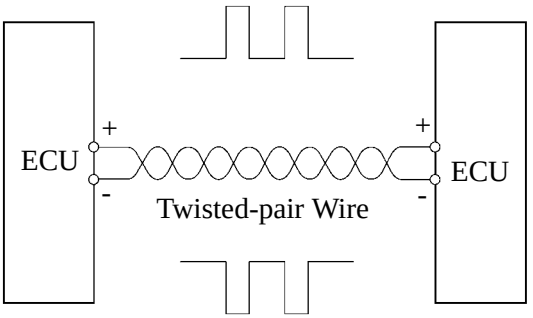

240BE12

Differential Voltage Drive

■CAN

1. General

The ’07 Camry uses two types of CAN that have different communication speeds: HS-CAN (500 kbps) and MS-CAN (250 kbps).

The HS-CAN consists of the CAN No.1 bus. The terminating resistors of the CAN No.1 bus are built into the ECM and meter ECU.

The MS-CAN consists of the MS bus. The terminating resistors of the MS-bus are built into the main body ECU and certification ECU. The MS bus is used only when the smart key system (certification ECU), which is optional equipment, is provided.

The main body ECU, which has a gateway function, is used to transmit data between the CAN No.1 bus and the MS bus.

▶ Image of Data Transmission between Buses ◀

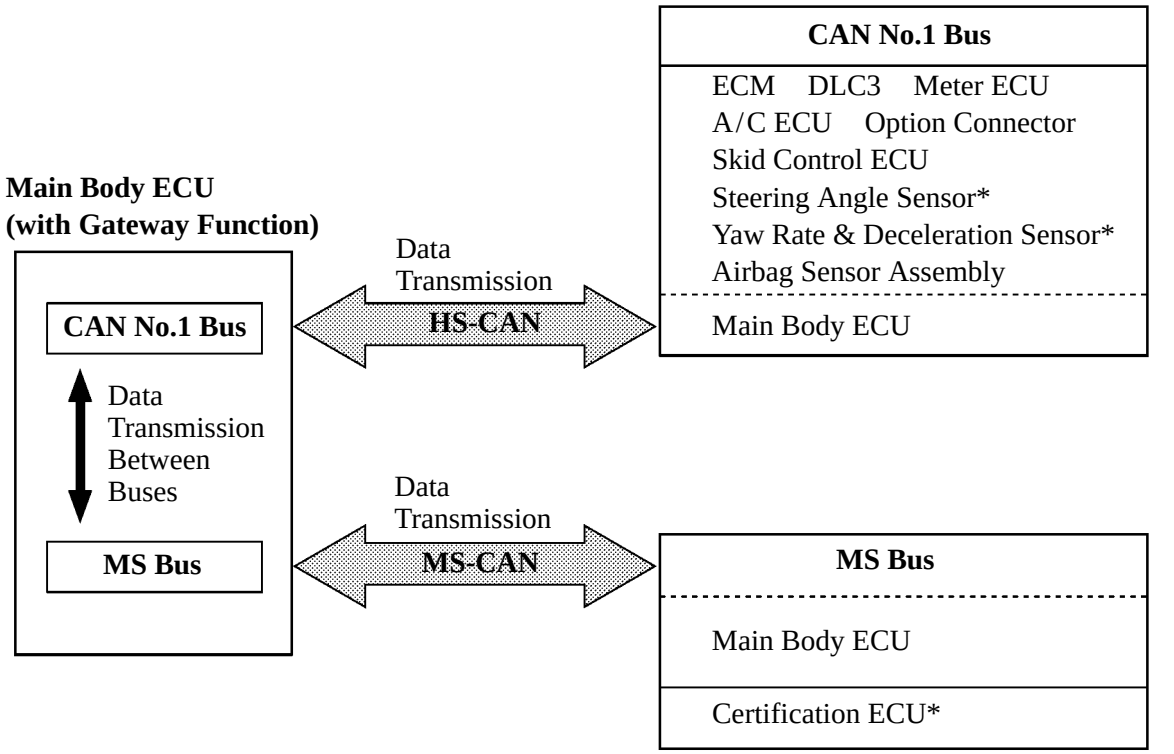

*: Optional Equipment

▶ CAN No.1 Bus ◀

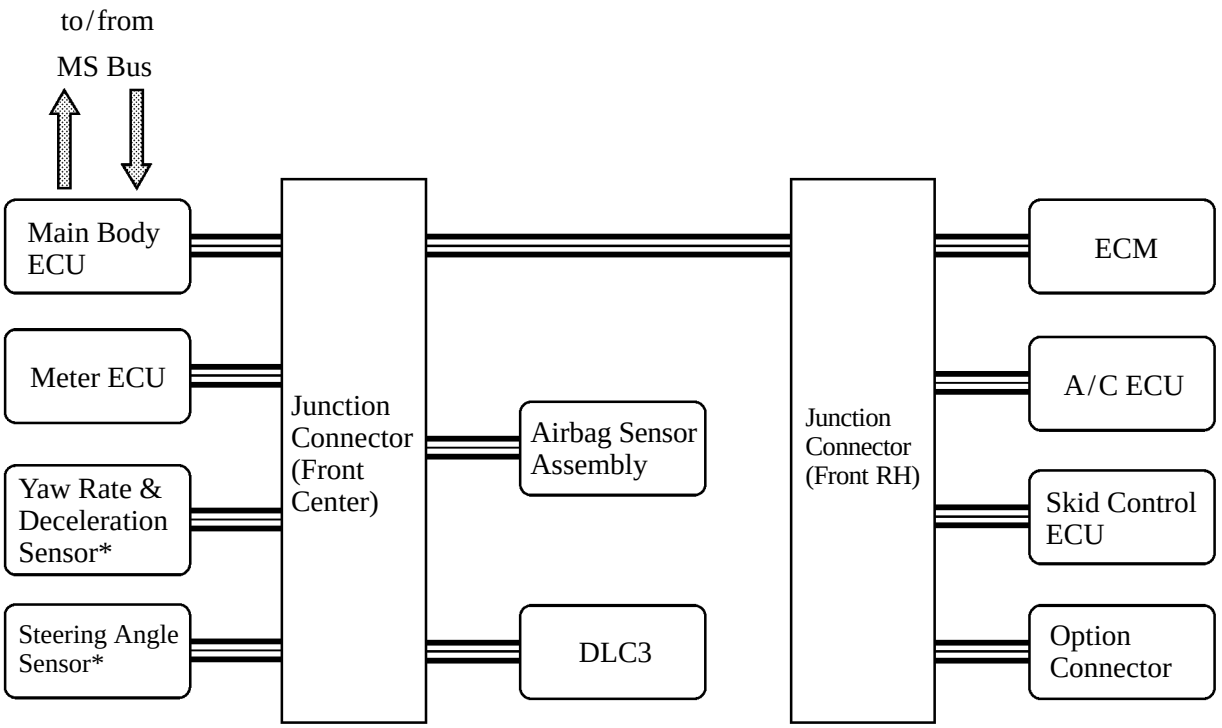

025BE02P

*: Optional equipment

▶ MS Bus ◀

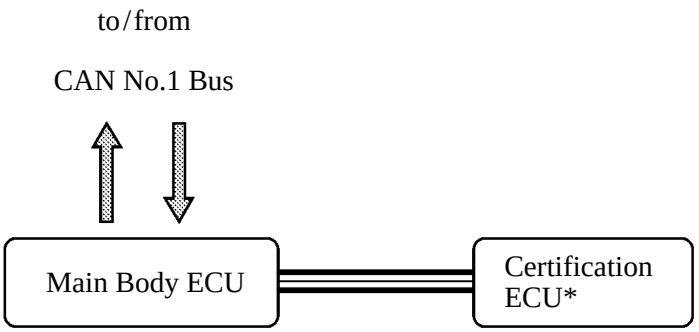

025BE03P

*: Optional equipment

2. Layout of Main Components

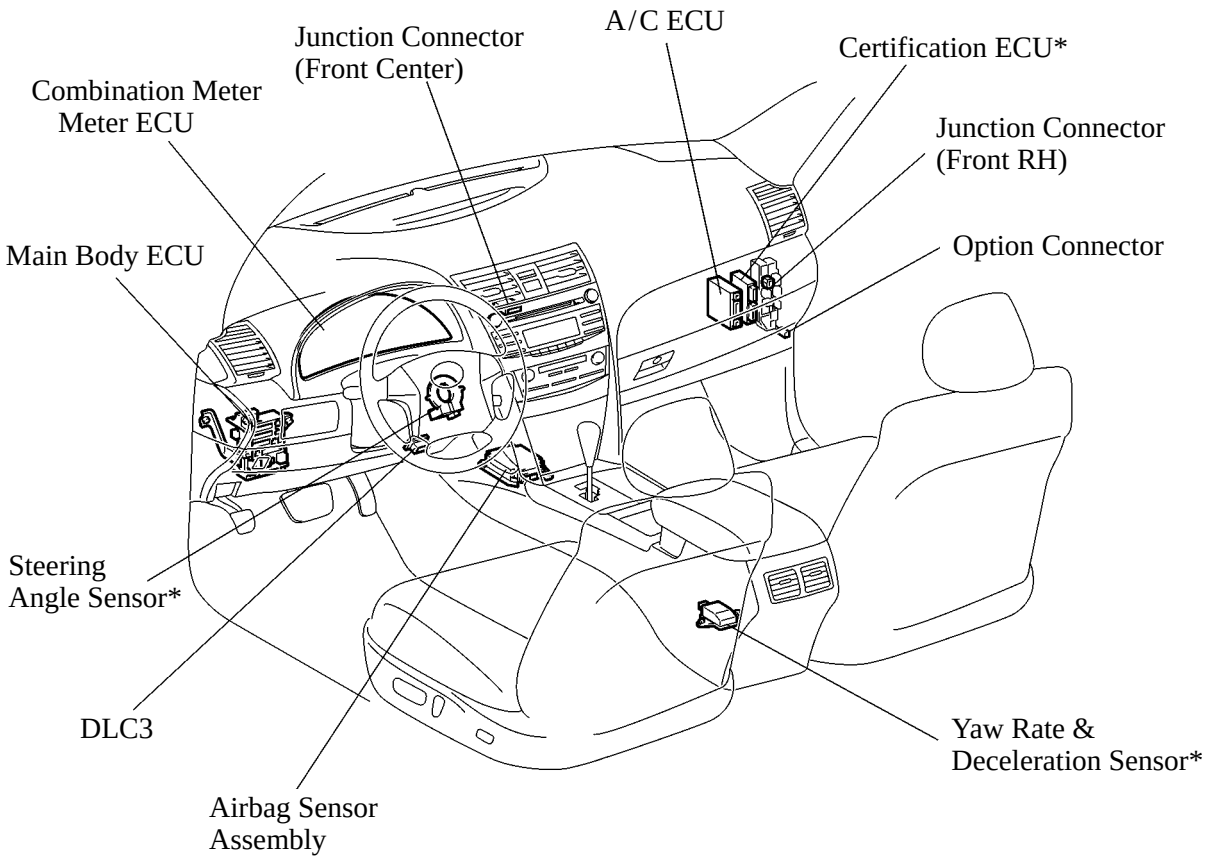

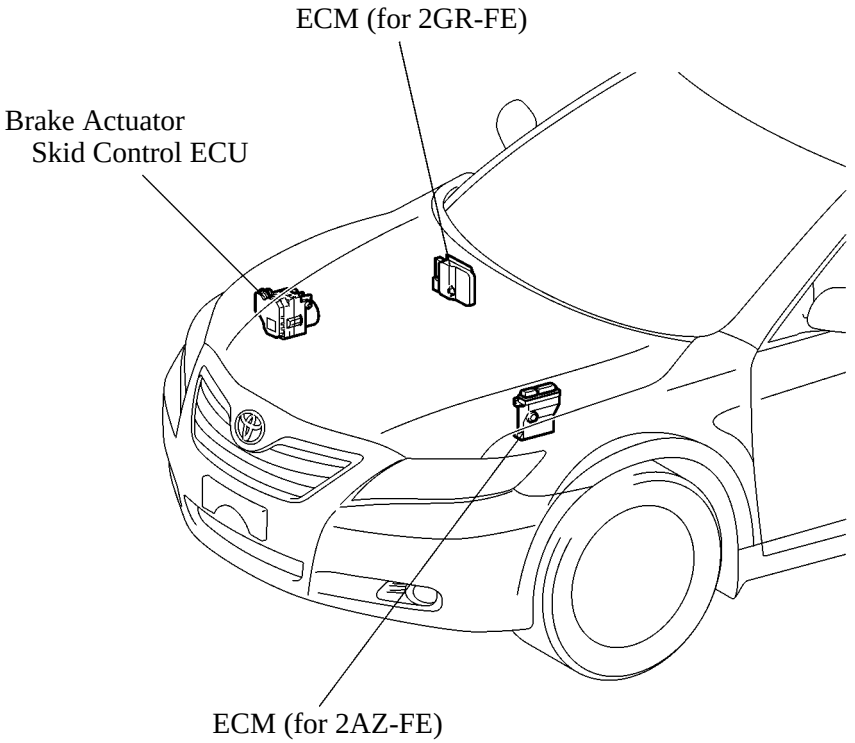

025BE04TE

*: Optional equipment

3. Diagnosis

If a malfunction occurs on the CAN communication line, the ECU that is connected to the CAN communication line stores the DTC (Diagnostic Trouble Code) in its memory.

The 5-digit DTC can be read by connecting a hand-held tester to the DLC3.

The DLC3 is equipped with CAN-H and CAN-L terminals for CAN diagnosis. It is possible to determine if there is an open or short in the main wire of the CAN No. 1 bus by measuring the resistance value between these terminals.

For details, see the 2007 Camry Repair Manual (Pub. No. RM0250U).

Service Tip

The diagnostic communication uses the CAN protocol. Therefore, a hand-held tester and a dedicated adapter [CAN VIM (Vehicle Interface Module)] are required for accessing diagnostic data. For details, see the 2007 Camry Repair Manual (Pub. No. RM0250U).

■AVC-LAN

1. General

The AVC-LAN is used to transmit data only between the audio head unit and the stereo amplifier on models with the JBL premium sound system.

▶ System Diagram ◀

025BE06P

2. Layout of Main Components

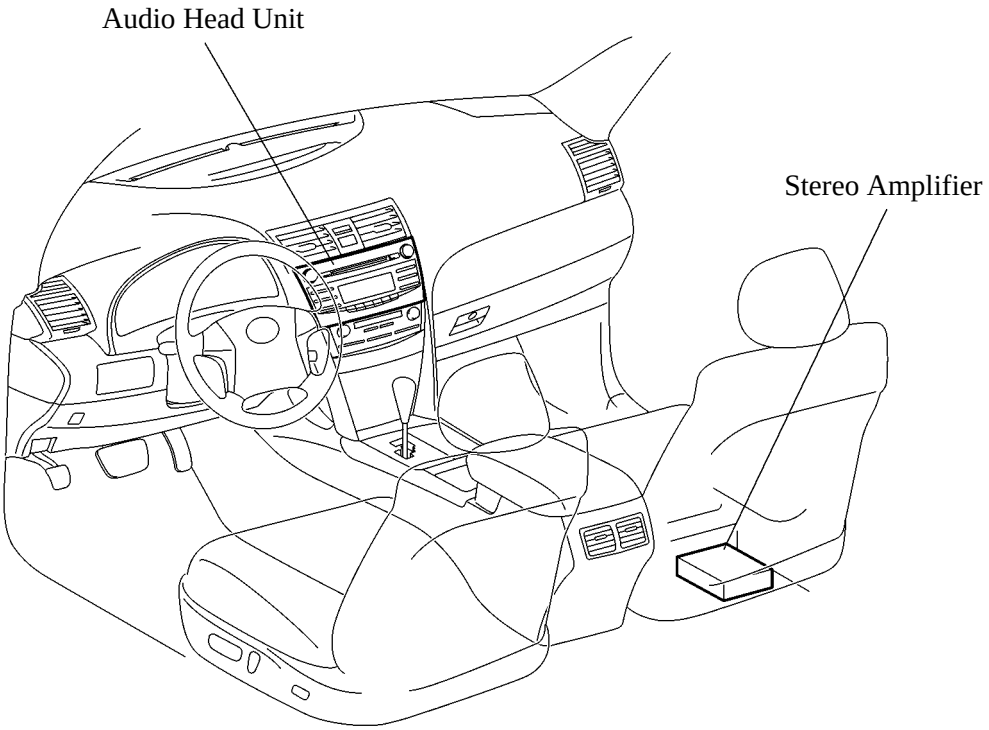

025BE05TE

3. Diagnosis

If a malfunction occurs in the AVC-LAN communication line, the audio head unit stores a DTC (Diagnostic Trouble Code) in its memory.

The DTC of models with the navigation with AV system can be read on the diagnosis menu display on the audio head unit.

The DTC of models without the navigation with AV system can be read on the LCD of the audio head unit.

For details, see the 2007 Camry Repair Manual (Pub. No. RM0250U).

■CUSTOMIZED BODY ELECTRONICS SYSTEM

A hand-held tester can be used to customize the system settings.

System	Hand-Held Tester Display Content	Contents	Default Setting	Available Setting
Wireless Door Lock	TRUNK LID OPER (Trunk lid open function type)	To change the operation method of opening the trunk by the transmitter.	0.8s PR	1 TIME/ 2 TIMES /0.8s PR /OFF
	WIRELESS OPER (Wireless door lock control function)	Function to turn ON/OFF of the wireless door lock.	ON	ON/OFF
	HAZARD ANS BACK (Hazard answer back of the wireless)	Function to turn ON/OFF of the hazard answer back of the wireless door lock.	ON	ON/OFF
	WIRLS BUZZ RESP (Wireless buzzer response)	Function to turn ON/OFF of the wireless buzzer response function.	ON	ON/OFF
	OPEN DOOR WARN (Open Door Warning)	Function to make the buzzer sound for 10 seconds if the door is open when locking with the wireless door lock.	ON	ON/OFF
	AUTO LOCK DELAY (Auto lock time)	Function to change the time until re-locking after unlocking with the wireless door lock.	60 sec	30 sec /60 sec
	UNLOCK/2 OPER (2 times operation wireless unlock)	Function to unlock the driver's door by pressing the unlock button of the transmitter once and to unlock all the doors by pressing it twice. In the OFF setting, pressing one time makes all the doors unlocked.	ON	ON/OFF
	ALARM FUNCTION*1 (Panic function)	Function to operate the theft deterrent system by keeping pressing the lock button of the transmitter for 1.5 seconds. If there is the panic button, press the panic button instead of the lock button.	ON	ON/OFF
Door Lock	UNLK/KEY TWICE (Unlock w/2 times D key operation)	Function to unlock only the driver's door by doing the key operation once and to unlock all the doors by doing it twice. In the OFF setting, operating the key "UNLOCK" once makes all the doors unlocked.	ON	ON/OFF
	AUTO LOCK/SHIFT (Automatic door lock linked shift)	Function to lock the doors when shifting the lever from P range to the range other than P.	ON	ON/OFF
	AUTO LOCK (Auto lock)	Function to lock the doors when the vehicle reaches a certain speed.	OFF	ON/OFF
	AUTO UNLK/SHIFT (Automatic door unlock linked shift)	Function to unlock the doors by shifting the lever to P range from other than P range when power source/ignition switch is ON.	ON	ON/OFF
	ALL UNLK/OPN-CL (All Unlock w/D door open-close)	Function to unlock all the other doors when opening the driver's door within 10 seconds after turning the power source/ignition switch to OFF from ON.	OFF	ON/OFF

(Continued)

System	Hand-Held Tester Display Content	Contents	Default Setting	Available Setting
Illuminated Entry	LIGHTING TIME (Lighting time)	Function to change the lighting time after closing the door. (It will quickly fade out in the event the power source/ignition switch is turned ON.)	15 sec	7.5 sec/ 15 sec/ 30 sec
	I/L ON/ACC OFF (I/L when ACC OFF)	Function to light up the interior lights when power source/ignition switch is turned from “ACC” to “OFF”.	ON	ON/OFF
	I/L ON/UNLOCK (I/L ON W/Door Key Unlock)	Function to light up the interior lights when unlocking with the door key cylinder.	ON	ON/OFF
Warning	KEY LOW-BATT WRN*2 (Warn when the key battery becomes weak)	Setting a warning function for the first time when a key battery becomes weak.	ON	ON/OFF
	SEAT BELT WARN (Seat belt warning buzzer)	Function to change the seat-belt warning buzzer.	D/P ON	D/P ON/ D ON/ P ON/ D/P OFF
Light Control	LIGHT OFF DELAY (Light auto OFF delay)	Function to keep on lighting the headlight for a certain period of time after closing all the doors with the power source/ignition switch turned OFF from ON under the condition that the light control switch is at HEAD or AUTO with the headlight ON.	30 sec	OFF/ 30 sec/ 60 sec/ 90 sec
	SENSITIVITY (Turn ON luminous intensity)	To adjust the sensitivity of the lighting illumination.	NORMAL	LIGHT 2/ LIGHT 1/ NORMAL/ DARK 1/ DARK 2
	DISP EX ON SEN (Display extinction luminous intensity)	To change the brightness of lowering the lights such as the indicator light of the combination meter, A/C indicator light, clock.	NORMAL	LIGHT 2/ LIGHT 1/ NORMAL/ DARK 1/ DARK 2
	DISP EX OFF SEN (Display extinction release luminous intensity)	To change the brightness of canceling the lowering the lights such as the indicator light of the combination meter, A/C indicator light, clock.	NORMAL	LIGHT 2/ LIGHT 1/ NORMAL/ DARK 1/ DARK 2
	DRL FUNCTION*3 (DRL function)	ON/OFF of the DRL function.	ON	ON/OFF

(Continued)

System	Hand-Held Tester Display Content	Contents	Default Setting	Available Setting
A/C*4	SET TEMP SHIFT (Set Temperature Shift)	To control with the shifted temperature against the display temperature.	NORMAL	+2 C/ +1 C/ NORMAL/ -1 C/ -2 C
	AIR INLET MODE (Air Inlet Mode)	In case of turning the A/C ON when you desire to make the compartment cool down quickly, this is the function to change the mode automatically to RECIRCULATED mode.	AUTO	MANU-AL/ AUTO
	COMPRESSOR MODE (Compressor Mode)	Function to turn the A/C ON automatically by pressing the AUTO button when the blower is ON and the A/C is OFF.	AUTO	MANU-AL/ AUTO
	COMPRS/DEF OPER (Compressor/Air Inlet DEF operation)	Function to turn the A/C ON automatically linking with the FRONT DEF button when A/C OFF.	LINK	NORMAL/ LINK
	EVAP CTRL (Evaporator Control)	Function to set the evaporator control to the AUTOMATIC position (AUTO) to save power or to the coldest position (MANUAL) to dehumidify the air and to prevent the windows fogging up.	AUTO	MANU-AL/ AUTO
	FOOT/DEF MODE (Foot/DEF auto mode)	Function to turn the air flow from FOOT/DEF ON automatically when AUTO MODE is ON.	ON	OFF/ON
	AUTO BLOW UP (Foot/DEF automatic blow up function)	Function to switch the blower level automatically when the defroster is ON.	ON	OFF/ON
	AMBIENT TMP SFT (Ambient Temperature Shift)	To control with the shifted ambient temperature against the display ambient temperature.	NORMAL	+3 C/ +2 C/ +1 C/ NORMAL/ -1 C/ -2 C/ -3 C
Smart Key*2	WARNING 7 (Select IG ON available area)	Function to choose the available area for the key to start E/G and cancel the Steering Lock.	ALL	FRONT/ ALL
	PARK WAIT TIME (Wait time to permit opening door after locking)	Setting a wait time to permit opening a door after it being locked.	3.0 sec	1.0 sec/ 2.0 sec/ 3.0 sec/ 5.5 sec
	TRUNK OPEN MODE (Trunk open mode when vehicle is locked)	Function to permit opening a trunk with the key.	ON	ON/OFF

*1: Only for models without smart key system
*2: Only for models with smart key system
*3: Except Canadian package models
*4: Only for models with automatic air conditioning

POWER DISTRIBUTOR

●DESCRIPTION

▶The power distributor is built into the engine room relay block, and uses a small mechanical relay and semiconductor relay for a compact and lightweight design.

▶The power distributor has a headlight control function. This function dims the headlights (Hi beam) in accordance with operation signals from the main body ECU while the daytime running light system is operating. For details, see page BE-19.

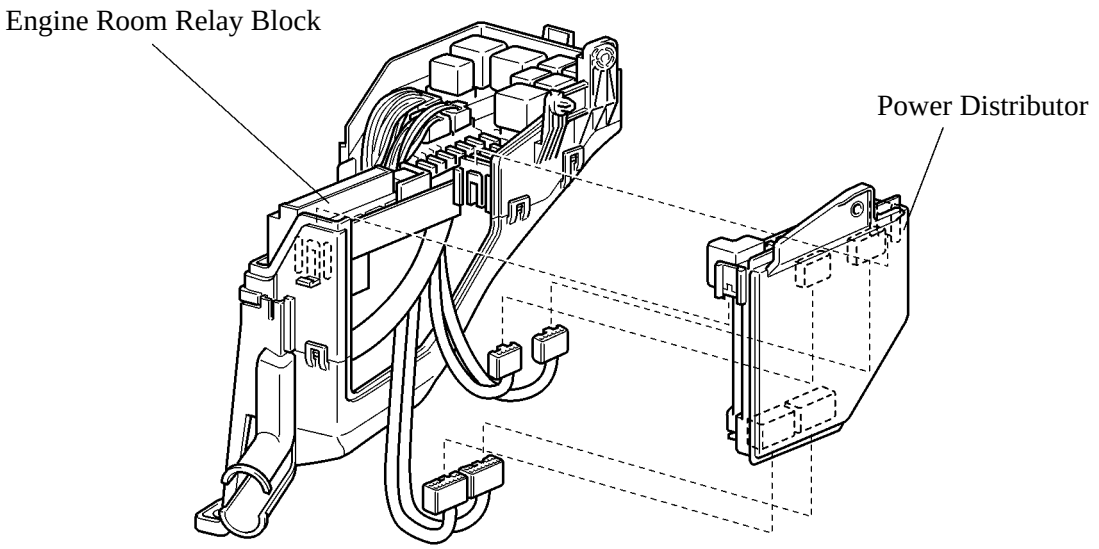

01YBE09Y

▶The components of the power distributor are shown below.

Component	Relay
Mechanical Relay	▶Horn Relay ▶A/F Relay ▶Security Horn Relay* ▶EFI Relay ▶Circuit Opening Relay ▶Headlight Relay (RH) ▶Headlight Relay (LH)
Semiconductor Relay	▶Daytime Running Light Relay (Headlight HI Beam Relay)

*: Only for models with theft deterrent system

LIGHTING

▪ DESCRIPTION

1. General

The lighting system includes the following equipment:

Item		XLE, SE Grade	LE Grade
Front Fog Light		Standard	—
Headlight	Halogen	Standard	Standard
Daytime Running Light		Standard	Standard
Automatic Light Control System		Standard	Standard
Illuminated Entry		Standard	Standard
Light Turn-OFF System (With Delay Function)		Standard	Standard

2. Front Exterior Light

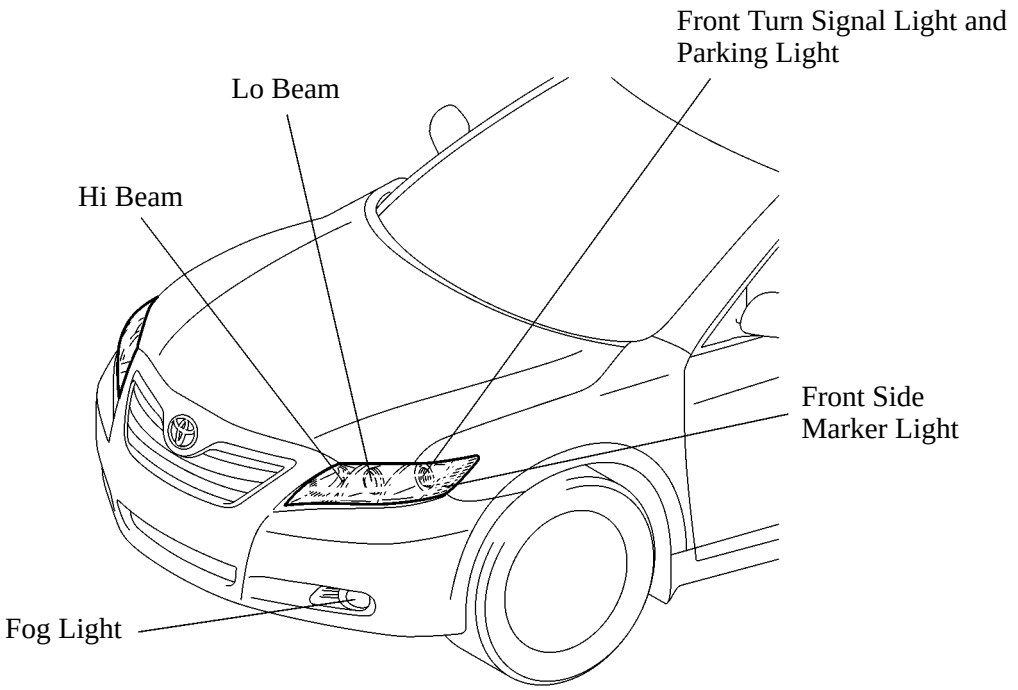

025BE07TE

▶ Specifications ●

Light		Type	W
Headlight Unit	Hi Beam	Halogen Bulb	60
	Lo Beam (Projector Type)	Halogen Bulb	55
	Turn Signal Light and Parking Light	Wedge Base Bulb (Amber)	27/8
	Front Side Marker Light	Wedge Base Bulb (Clear)	5
Fog Light		Halogen Bulb	55

3. Rear Exterior Light

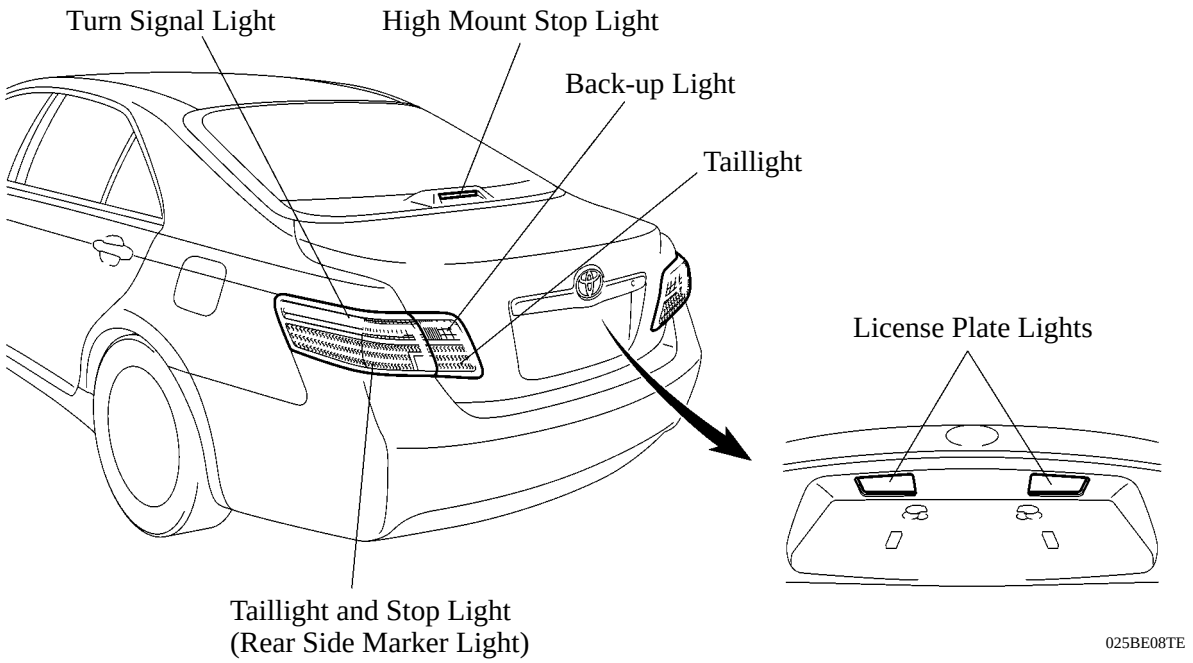

▶ Specifications ●

Light		Type	W
Combination Light	Taillight & Stop Light (Rear Side Marker Light)	Wedge Base Bulb (Clear)	5/21
	Taillight	Wedge Base Bulb (Clear)	5*1 or 3.8*2
	Turn Signal Light	Wedge Base Bulb (Amber)	21
	Back-up Light	Wedge Base Bulb (Clear)	18
License Plate Lights		Wedge Base Bulb (Clear)	5
High Mount Stop Light		LED x 4	1.0

*1: Only for TMC made models
*2: Only for TMMK made models

▪ DAYTIME RUNNING LIGHT SYSTEM

A daytime running light system is designed to automatically illuminate the headlights (dimmed Hi beam), during the daytime to keep the car highly visible to other vehicles.

The main body ECU and power distributor control this system. The main body ECU transmits a turn ON signal to the power distributor, and the power distributor illuminates and dims the Hi beam with the duty control.

This system is enabled when the conditions given below are met:

- Power Source: IG-ON*1
- Engine Speed Signal Input (Engine Running Condition)
- Light Control Switch OFF*2, TAIL, or AUTO position (if headlight-on control is not being performed by the automatic light control.)
- Parking Brake Switch: OFF

*1: The power source condition can be changed by operating the engine switch on models with the smart key system, and the ignition switch on models without the smart key system.
*2: Only for Canadian package models

▶ System Diagram ●

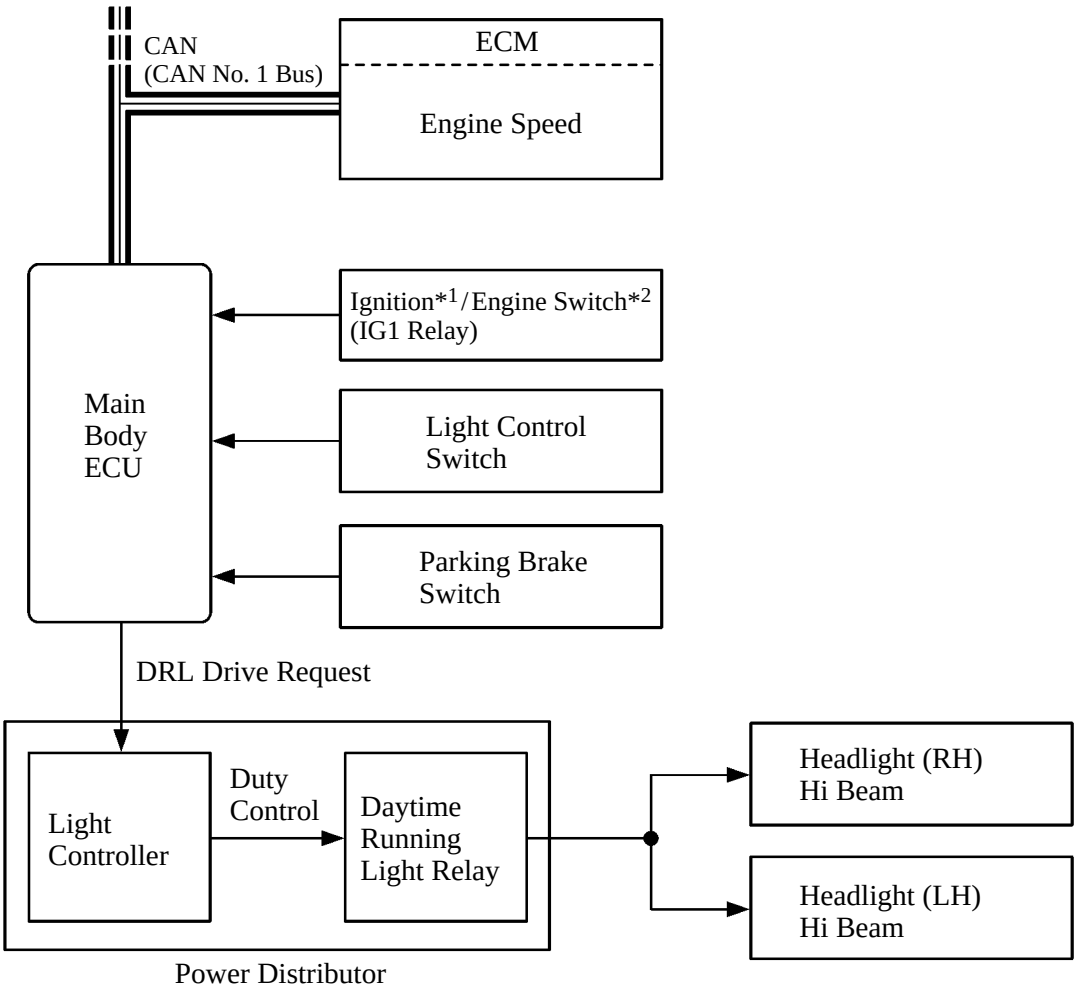

*1: Models without smart key system
*2: Models with smart key system

01YBE19P

■ILLUMINATED ENTRY SYSTEM

1. General

The illuminated entry system of the ’07 Camry controls interior light and ignition switch*1/engine switch illumination*2.

The interior light is operated when the light switch is in the DOOR position.

*1: Models without smart key system
*2: Models with smart key system

▶ System Diagram ◀

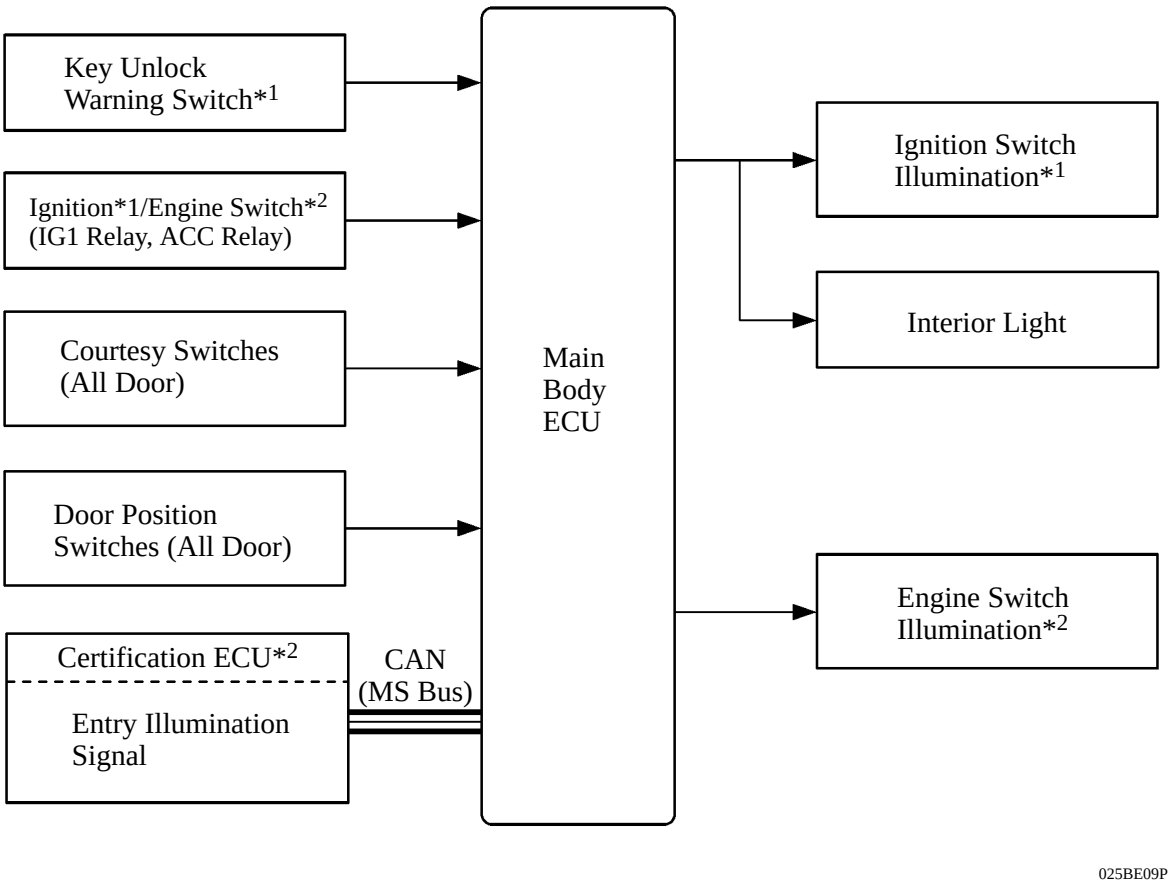

*1: Models without smart key system
*2: Models with smart key system

2. Layout of Main Components

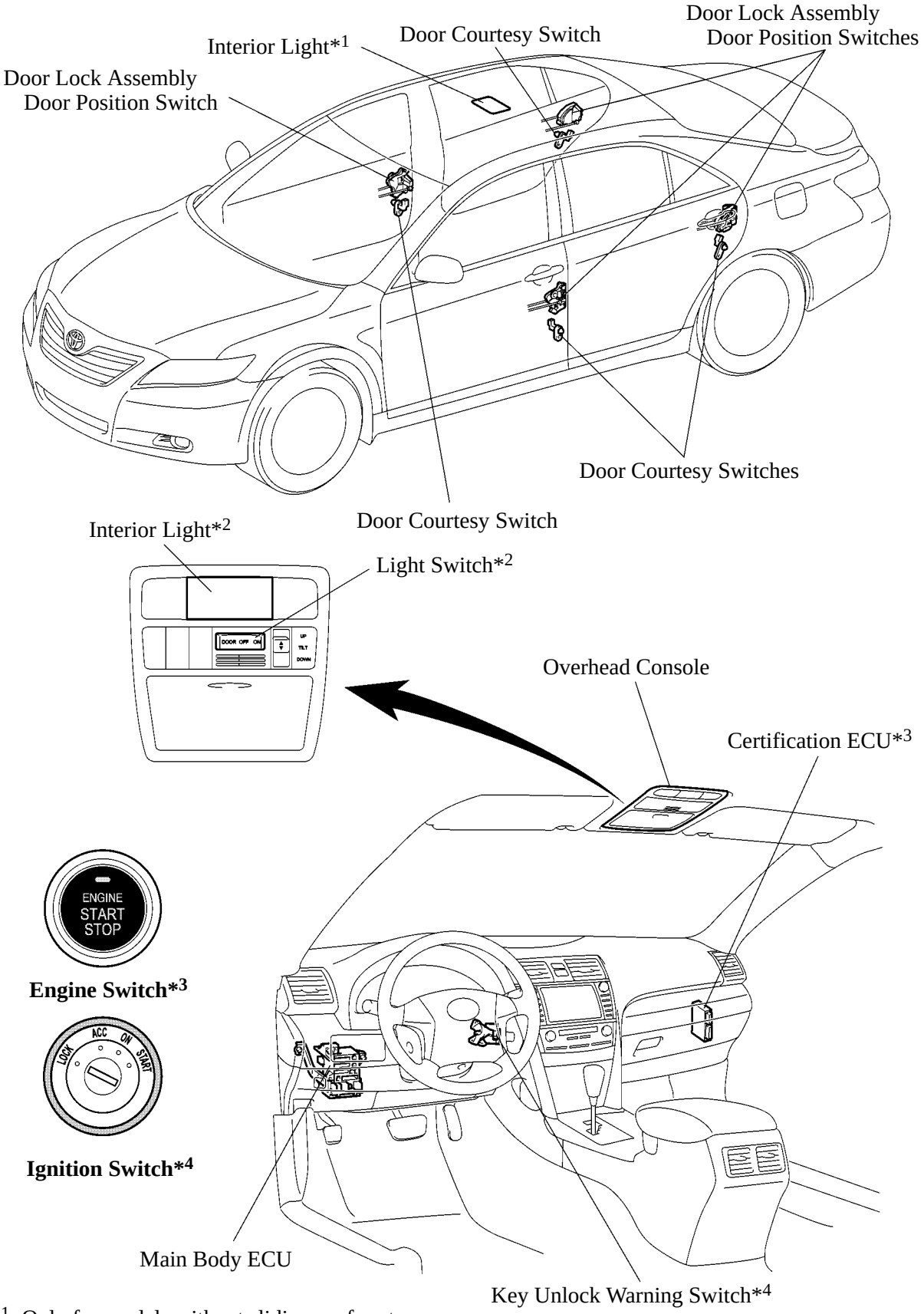

025BE10TE

*1: Only for models without sliding roof system
*2: Only for models with sliding roof system
*3: Only for models with smart key system
*4: Only for models without smart key system

3. Interior Light Control

The interior light control (interior light and ignition switch illumination*1/engine switch illumination*2) consists primarily of the fade-in/fade-out function and timer illumination function.

The interior light control activates as described in the diagram below when one of items is in the respective state.

This control is controlled by the main body ECU.

*1: Models without smart key system
*2: Models with smart key system

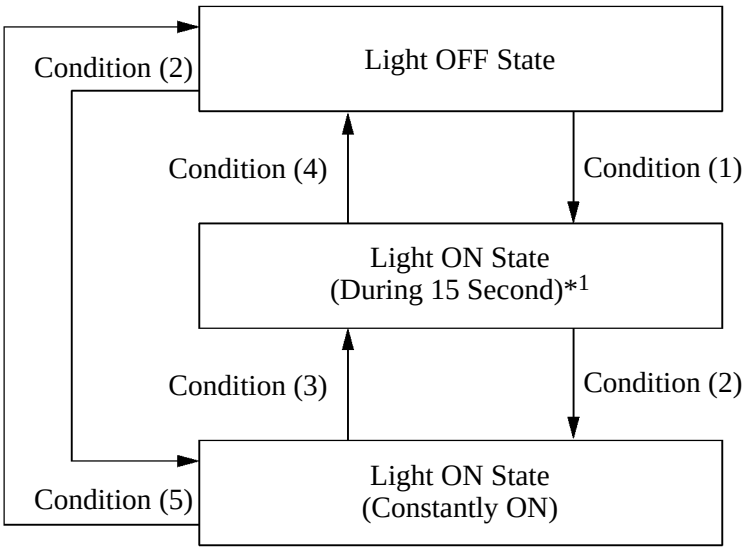

241BE32

Condition	Item
Condition (1)	With power source*2 OFF and all doors closed, any door is unlocked. With all doors closed, power source*2 is changed from ACC to OFF. With power source OFF and all doors closed, key enters any actuation area around the doors. (Only for models with smart key system)
Condition (2)	Any door is open.
Condition (3)	With power source*2 OFF, all doors are closed.
Condition (4)	Power source*2 is ACC or ON. More than 15 seconds have elapsed since the Light ON State (15 second duration)*1. With power source*2 OFF and all doors closed, all doors are locked.
Condition (5)	With power source*2 ACC or ON, all doors are closed. With power source*2 OFF and all doors closed, all doors are locked.

*1: The function setting can be changed using the customized body electronics system. For details, refer to Customized Body Electronics System section on page BE-13.

*2: The power source condition can be changed by operating the engine switch on models with the smart key system, and the ignition switch on models without the smart key system.

4. Battery Saving Control

When the following two conditions have been met, battery saving control turns off the lights illuminated by the illuminated entry controls. Battery saving control is controlled by the main body ECU.

The key is not in the actuation area (models with smart key system), or the ignition key is not in the ignition key cylinder (models without smart key system).

There is no change in the condition of the doors for 20 minutes.

■AUTOMATIC LIGHT CONTROL SYSTEM

When the light control switch is in the AUTO position, the automatic light control system detects ambient light levels and controls the headlights and taillights (parking lights, taillights and license plate lights).

The light control sensor detects the ambient light levels. This sensor is integrated into the solar sensor that is used for automatic air conditioning control on models with automatic air conditioning.

The main body ECU controls this system.

▶ System Diagram ◀

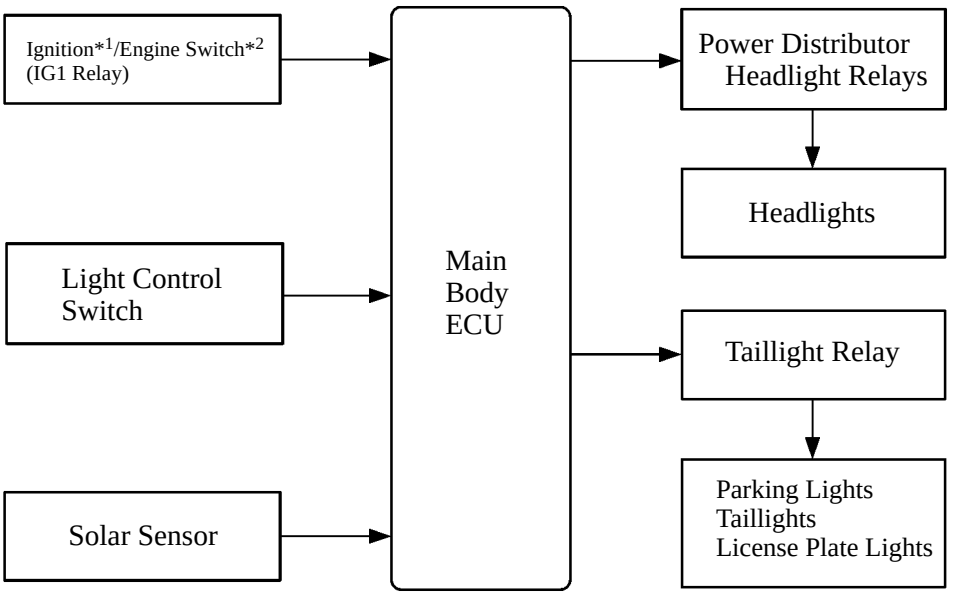

01YBE23P

*1: Models without smart key system
*2: Models with smart key system

■LIGHT TURN-OFF SYSTEM

The light turn-off system is used to prevent the driver from leaving the vehicle with the exterior lights (headlights, fog lights, parking lights, taillights and license plate lights) ON.

If the pwer source* is turned OFF and any door is opened and all doors (including the luggage compartment door) are closed with all exterior lights ON, this system turns them OFF approximately 30 seconds after door closure. However, with all the doors locked, when the lock button on the wireless remote control is pushed, the exterior lights are turned OFF immediately.

When the power source* is turned OFF and the driver's door is opened with the exterior lights except headlights ON, this system turns them OFF.

*: The power source condition can be changed by operating the engine switch on models with the smart key system, and the ignition switch on models without the smart key system.

▶ System Diagram ◀

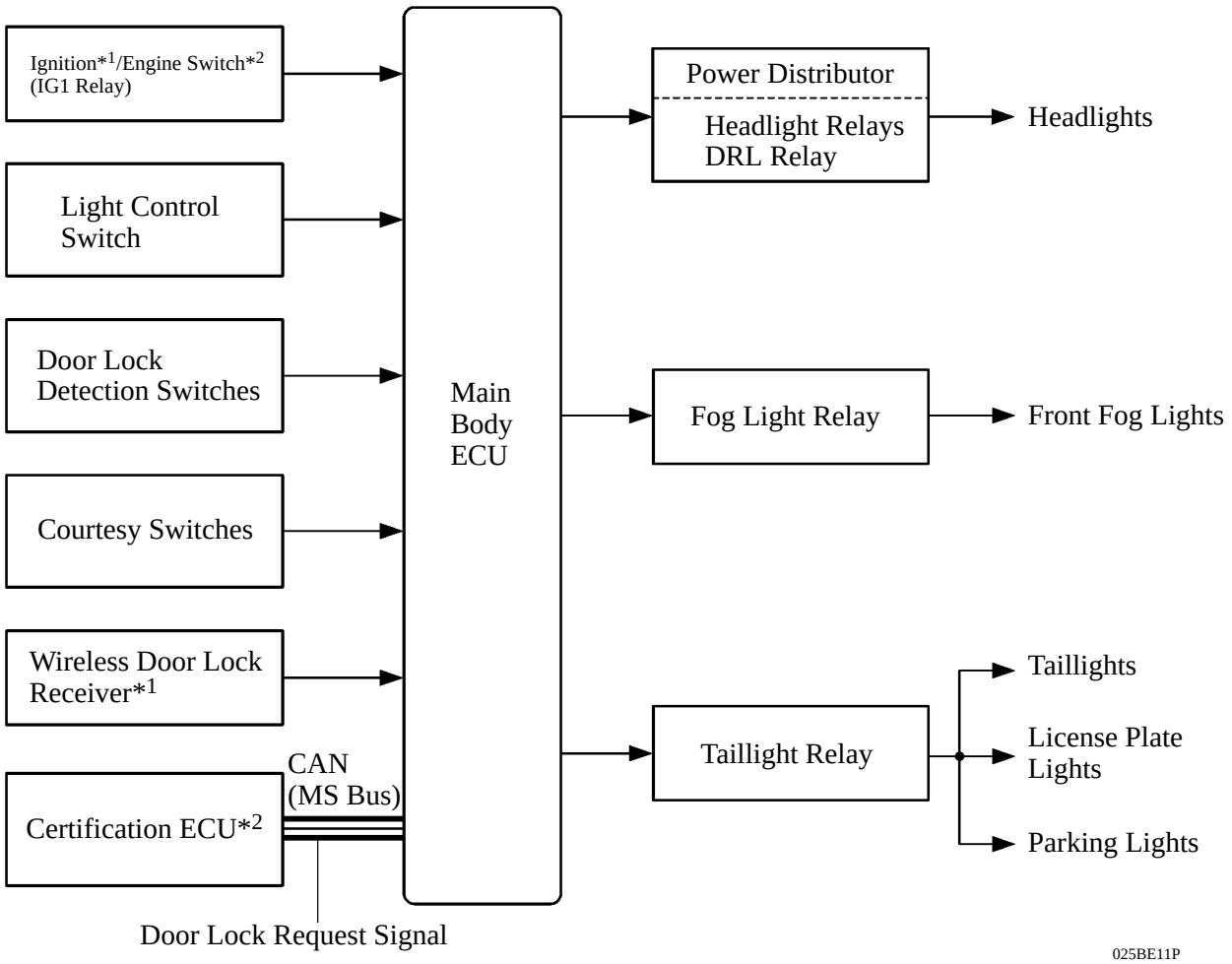

*1: Models without smart key system
*2: Models with smart key system

METER

▪ COMBINATION METER

1. General

An optitron display type combination meter is used on XLE and LE grade models. The optitron display type meter realizes excellent visibility through the use of smoke acrylic in the protective panel, and bright LEDs (Light Emitting Diodes) that have high contrast to illuminate the indicator and the dial.

A multi-information display is provided on the speedometer on XLE grade models.

A meter ECU and buzzer are enclosed in the combination meter. This ECU maintains communication with other ECUs through the CAN (Controller Area Network).

Illumination control, which turns on the combination meter illumination at different time intervals when the power source* is switched to IG-ON, has been provided.

A step-motor type movement is used to actuate the indicators of the speedometer, the fuel gauge, the engine coolant temperature gauge and the tachometer.

*: The power source condition can be changed by operating the engine switch on models with the smart key system, and the ignition switch on models without the smart key system.

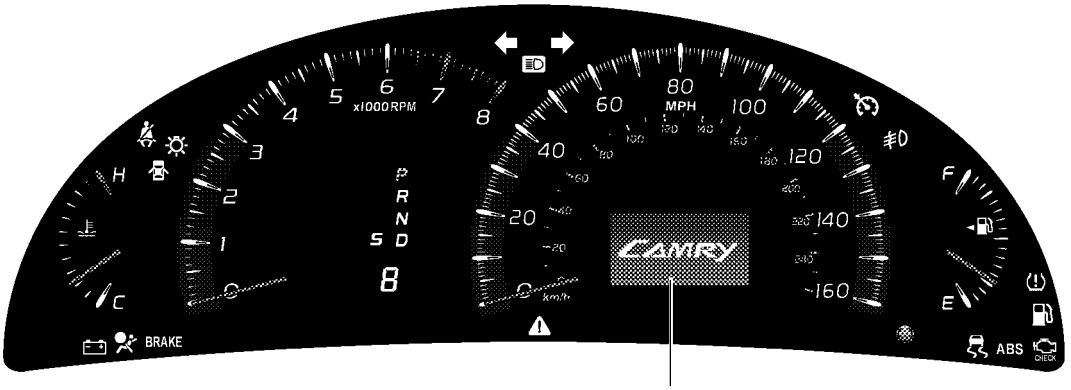

Multi-information Display

025BE13Y

XLE Grade Models with 2GR-FE Engine for U.S.A.

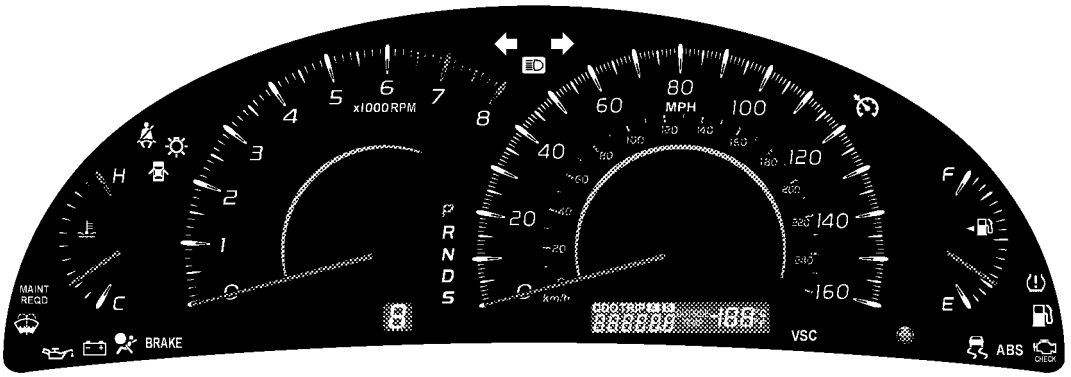

LE Grade Models with 2GR-FE Engine for U.S.A.

025BE52Y

Service Tip

If the LEDs malfunction, the entire combination meter assembly must be replaced. Refer to the 2007 Camry Repair Manual (Pub. No. RM0250U).

2. System Diagram

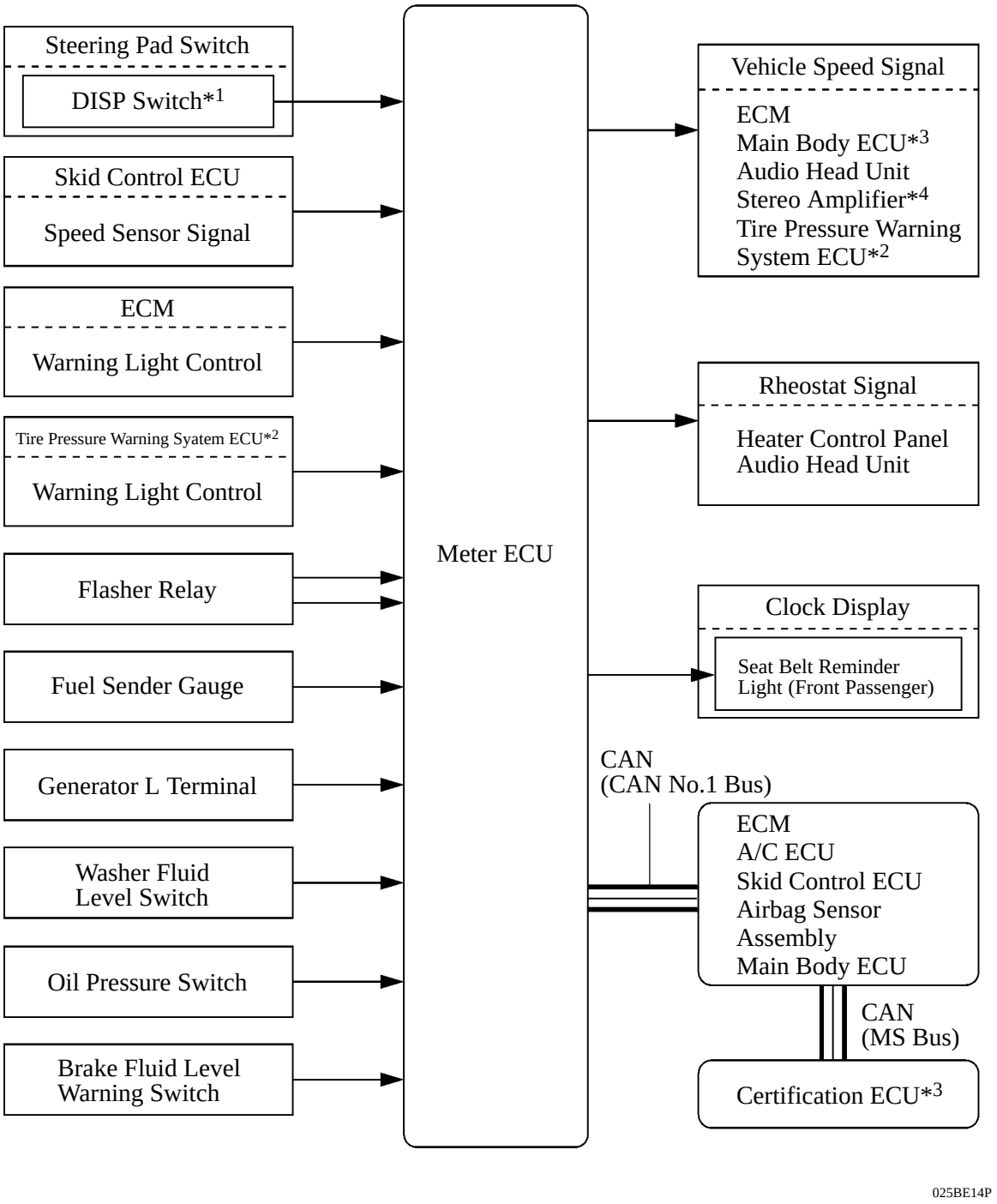

*1: Only for XLE grade models
*2: Only for U.S.A. models
*3: Only for models with smart key system
*4: Only for models with JBL premium sound system

▶ Input and output communication signals of the combination meter ●

Protocol	ECU	Input Signal	Output Signal
CAN (CAN No.1 Bus)	ECM	Engine speed Engine coolant temperature Fuel injection volume Starter condition Shift position S mode indicator Current range position Buzzer sounding request Indicator light control Diagnosis (Cruise) Engine type information	—
	A/C ECU	Outside temperature	Vehicle speed
	Airbag Sensor Assembly	Warning light control Seat belt remainder control (D, P) Diagnosis	Vehicle speed
	Skid Control ECU	Warning light control Indicator light control Diagnosis	—
	Main Body ECU	Lighting status Parking brake switch Courtesy switch Buzzer sounding request Key unlock warning switch Warning display control Diagnosis	—
CAN (MS Bus)	Certification ECU*	Warning display control Buzzer sounding request	—

*: Only for models with smart key system

3. Illumination Control

When the power source is switched to IG-ON, the illumination control operates as follows (1, 2). However, all illuminations turn off while the engine is cranked.

When the power source is switched to OFF, the illumination control is as follows (3).

1) The needles of the speedometer, tachometer, fuel gauge and engine coolant temperature gauge are illuminated and “Camry” appears on the multi-information display.

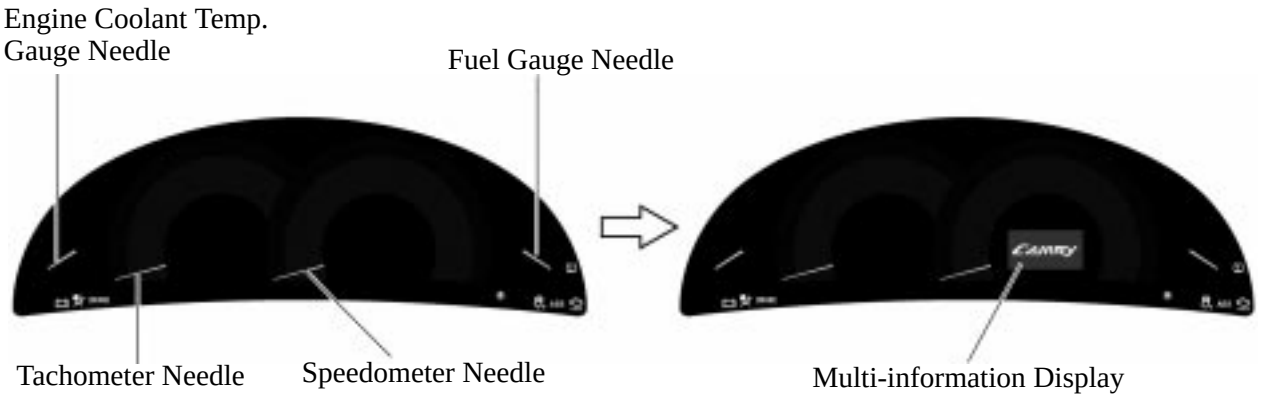

025BE15Y

2) After the multi-information display illuminates, the meter illumination gradually fades in.

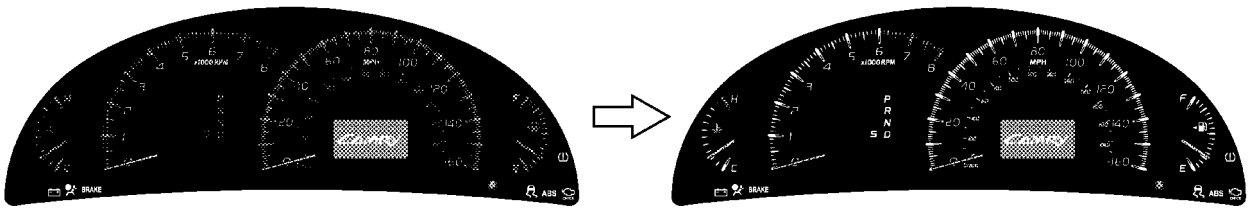

025BE16Y

3) All illuminations other than the multi-information display go off, and “Camry” appears on the multi-information display. Then the “Camry” disappears and the multi-information display turns off.

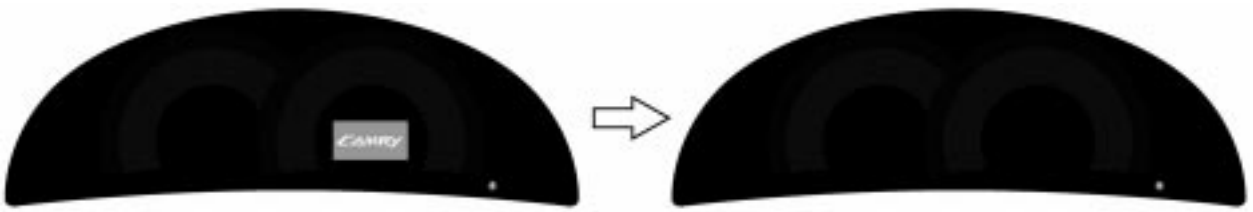

025BE17Y

4. Multi-information Display

General

The multi-information display has three modes:

Mode	Outline
Cruise Information (See page BE-31)	Five types of information can be displayed: outside temperature, driving range, average fuel consumption since refueling, distance driven since engine start, and average speed since engine start. The display can be switched by using the DISP switch.
Warning (See page BE-32)	Interrupts the multi-information display immediately when a warning occurs.
Diagnosis (See page CH-137)	DTC (Diagnostic Trouble Code) for the brake control system (TRAC and VSC) can be displayed.

The multi-information display modes can be switched as shown in the flow chart below:

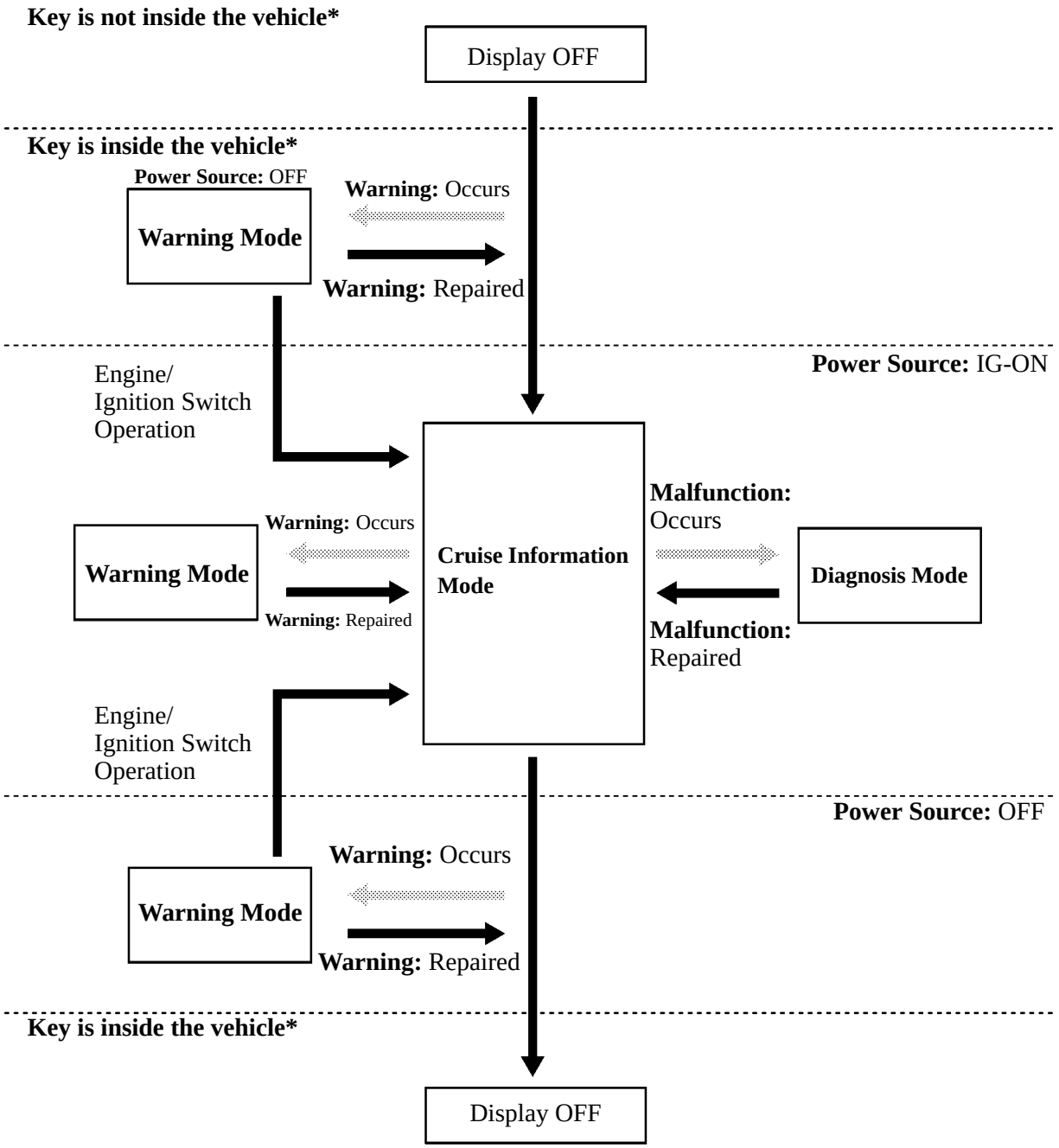

025BE12P

*: Models with smart key system

Cruise Information Mode

The cruise information is displayed in the following order, changing each time the DISP switch is pressed. However, pressing the DISP switch for approximately 1 second or more changes the display to the outside temperature indication.

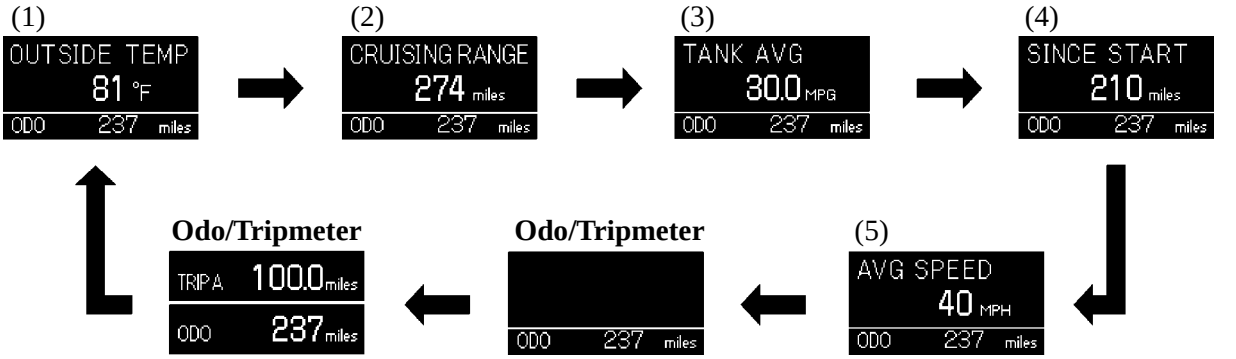

025BE18P

Information		Outline
(1)	Outside Temperature	Displays the outside temperature in accordance with the outside temperature sensor signal from the A/C ECU.
(2)	Driving Range	Displays the range, calculated by the combination meter which continuously monitors and stores fuel consumption data and the residual fuel volume when IG-ON has been selected. Updated every 1 mile (U.S.A. model) or 1 km (except U.S.A. model [package option]).
(3)	Average Fuel Consumption Since Refueling	Displays the value, calculated by the combination meter, based on the distance driven since refueling and the fuel consumption volume (fuel injection signals from the No.1 injector). The combination meter determines the vehicle has been refueled through the signal from the fuel sender gauge. Updated every 10 seconds.
(4)	Distance Driven Since Engine Start	Displays the value calculated by the combination meter based on the distance driven since engine start. Updated every 1 mile (U.S.A. model) or 1 km (except U.S.A. model [package option]).
(5)	Average Speed Since Engine Start	Displays the average speed calculated by the combination meter based on the length of time and the distance driven since engine start. Updated every 10 seconds.

Warning Mode

1) General

When a warning is necessary, the warning display interrupts the multi-information display.

The master warning light may illuminate or flash and the buzzer may sound depending on the item in the multi-information display.

Warning	Detail	Warning	Detail
KEY IS NOT DETECTED ODO 237 km : Flash Buzzer: Sound 025BE19P	The key is not inside the vehicle. (Models with smart key system)	SHIFT TO P RANGE ODO 237 km : Flash Buzzer: Sound 025BE20P	The driver door is opened with the shift lever in any position other than P. (Models with smart key system)
S/T IS NOT UNLOCKED ODO 237 km : Flash 025BE21P	Steering lock has not been released. (Models with smart key system)	CHECK S/T LOCK ODO 237 km : Flash 025BE22P	Steering lock is malfunctioning. (Models with smart key system)
WHEN STARTING THE ENGINE, DEPRESS THE BRAKE PEDAL ODO 237 km Buzzer: Sound 025BE23P	The power source is switched from OFF to ACC twice with the brake pedal released. (Models with smart key system)	CHECK VSC SYSTEM ODO 237 km : Illuminate Buzzer: Sound 025BE24P	TRAC and VSC are malfunctioning. (Models with Brake Control System [ABS with EBD, Brake Assist, TRAC and VSC])
LOW KEY BATTERY ODO 237 km : Flash Buzzer: Sound 025BE25P	Key battery is low. (Models with smart key system)	PARK BRAKE ODO 237 km : Flash Buzzer: Sound 025BE26P	Parking brake is still engaged with the vehicle having reached a speed of 5 km/h (3 mph).
DRIVER DOOR OPEN ODO 237 km PASSENGER DOOR OPEN ODO 237 km RIGHT REAR DOOR OPEN ODO 237 km LEFT REAR DOOR OPEN ODO 237 km : Flash* : Illuminate Buzzer: Sound* 025BE27P	Any door is open. *: The vehicle having reached a speed of 5 km/h (3 mph).	HOOD OPEN ODO 237 km : Flash* Buzzer: Sound* 025BE28P	Engine hood is open. *: The vehicle having reached a speed of 5 km/h (3 mph).
		TRUNK OPEN ODO 237 km : Flash* : Illuminate Buzzer: Sound* 025BE29P	Luggage compartment door is open. *: The vehicle having reached a speed of 5 km/h (3 mph).

Warning	Detail	Warning	Detail
LOW ENGINE OIL PRESSURE ODO 237 km ⚠ : Flash Buzzer: Sound 025BE30P	Engine oil pressure is low.	WATER TEMP ODO 237 km ⚠ : Flash Buzzer: Sound 025BE31P	Engine coolant temperature is high.
LOW WASHER FLUID ODO 237 km ⚠ : Illuminate Buzzer: Sound 025BE32P	Washer fluid level is low.	MOONROOF OPEN ODO 237 km Displayed for 8 sec. ⚠ : Flash Buzzer: Sound 025BE33P	The sliding roof is open and the driver door is open.
MAINT REQD SOON ODO 4500 miles ⚠ : Illuminate Buzzer: Sound 025BE34P	Comes on approximately 4500 miles after the engine oil is changed. (Only for U.S.A. models)	MAINT REQD ODO 5000 miles ⚠ : Illuminate Buzzer: Sound 025BE35P	Comes on approximately 5000 miles after the engine oil has been changed. (Only for U.S.A. models)

2) Oil Replacement Reminder

The oil replacement reminder appears to remind the driver to change the engine oil in accordance with the vehicle driving distance. This reminder is not provided on models equipped with destination package options (reminder provided only on U.S.A. models).

The meter ECU calculates the vehicle driving distance based on the signals from the skid control ECU.

There are two types of warnings: one is displayed when the vehicle driving distance has reached 4,500 miles or more since the last time the system was reset, and the other is displayed when the driving distance has reached 5,000 miles or more.

The “OIL MAINT REQD SOON” warning appears for approximately 15 seconds after the power source is changed to IG-ON, and then goes off.

The “OIL MAINT REQD” warning remains on while the power source is IG-ON.

4,500 miles or more

5,000 miles or more

025BE36P

After the engine oil has been changed, the accumulated vehicle driving distance is memorized in the meter ECU and should be reset through the operation of the “TRIP” meter reset knob. At this point, the accumulated vehicle driving distance is reset to zero.

Service Tip

The accumulated vehicle driving distance is stored in the meter ECU and can be reset using the following procedure.

1) Switch the power source to IG-ON and make sure that the LCD of the tripmeter/TRIP A (SE and LE grade) or LCD of the multi-information display/TRIP A display (XLE grade) is on.
2) Switch the power source to OFF. While pushing the “TRIP” meter reset knob, switch the power source to IG-ON.
3) With the power source in the IG-ON mode, keep holding the “TRIP” meter reset knob (for at least five seconds) with the LCD counting down as shown below. Release the “TRIP” meter reset knob when the resetting is complete.
4) When the resetting is complete, the LCD displays “000000” (SE and LE grades), or the LCD displays “COMPLETE” for 1 second, the master warning light illuminates and the buzzer sounds once (XLE grade). Then, the LCD displays the odometer.

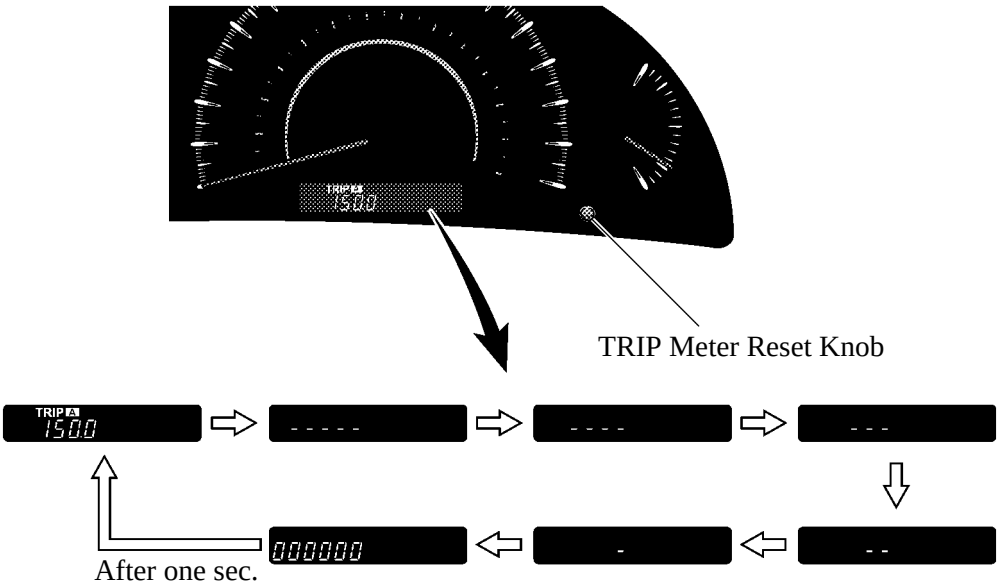

LE Grade Models

025BE37Y

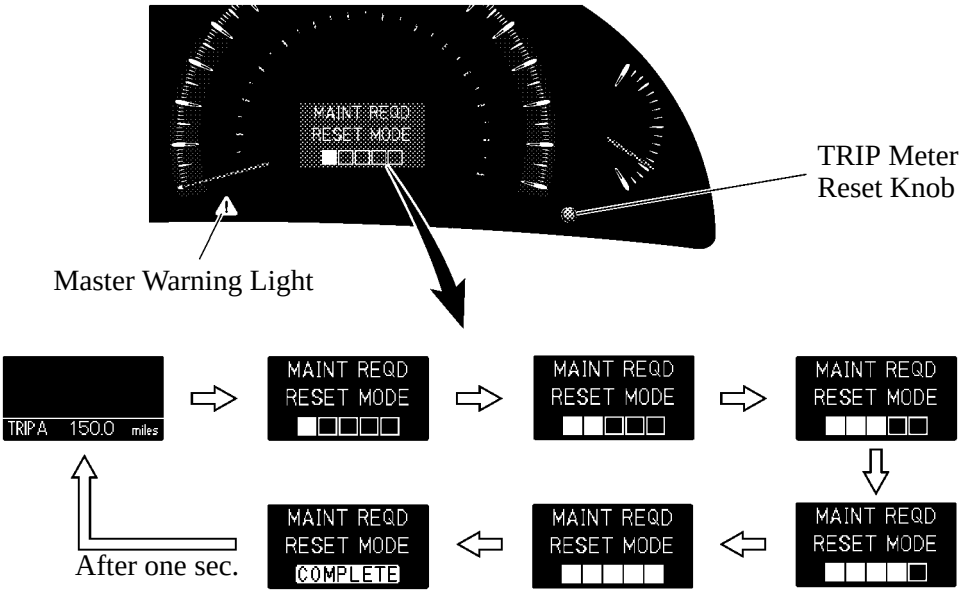

XLE Grade Models

025BE38Y

5. Buzzer

General

The table below shows the warning and reminder functions of the buzzer.

Function	Item
Warning	Multi-information Display Warning Mode Indication (See page BE-32) Shift Down Warning (See page CH-73)
Reminder	Key Reminder (For models with smart key system, see page BE-119.) Seat Belt Reminder (See page BE-158)

Key Reminder (Models without Smart Key System)

When the driver's door is opened with the ignition key in the ACC or LOCK position, the meter ECU sounds the buzzer to warn the driver that the ignition key has not been removed.

6. Active Circuit

Active circuits are used in the tire pressure warning light circuit in order to illuminate the light when there is an open or short circuit in the wiring harness. Thus, the malfunction detection area has been expanded.

▶ Active Circuit Conceptual Drawing ●

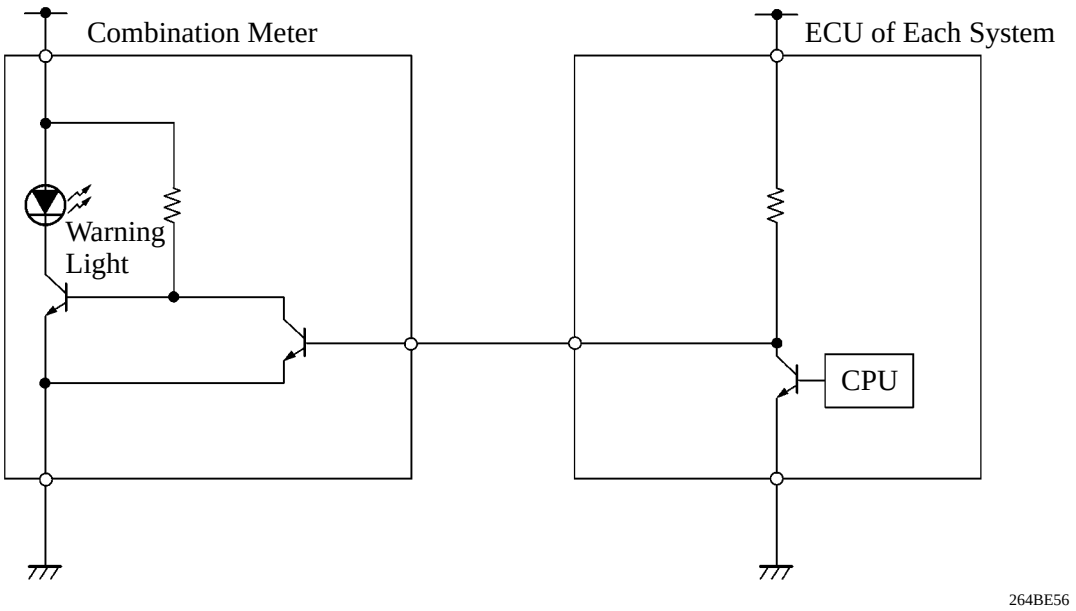

AIR CONDITIONING

●DESCRIPTION

▶Automatic air conditioning using left/right independent temperature control and neural network control is standard equipment on XLE grade models.

▶Manual air conditioning is standard equipment on SE and LE grade models.

▶The air conditioning has the following features:

Features	Outline	Automatic A/C	Manual A/C
High Performance	Neural network control is used so passengers can control the air conditioning accurately for maximum comfort.		—
	FACE mode for the rear seat is installed to blow warm air and ensure excellent heating performance.		—
	A micro dust and pollen filter, which removes pollen, is used as the clean air filter.		
	The blower control has seven levels for precise control.		
	A Plasmacluster™ generator is provided to improve the air quality and comfort in the cabin.		—
	A MAX A/C setting is provided on the temperature control switch to improve cooling efficiency.	—	
Lightweight	A BUS connector with a built-in IC is used in a lightweight wire harness design with a reduced number of wires. The use of this connector means that pulse pattern type servo motors are used.		
Compact	A blower motor with a built-in blower motor controller is used in a compact construction.		
Others	The following parts are used to ensure high cooling performance while realizing a compact and lightweight construction. ▶Semi-center Location A/C Unit ▶RS (Revolutionary super-slim Structure) Evaporator ▶SFA (Straight Flow Aluminum)-II Heater Core ▶MF (Multi-Flow)-IV Sub -cool Condenser ▶Continuously Variable Capacity Type Compressor with magnetic clutch. (Models with 2GR-FE engine) ▶Continuously Variable Capacity Type Compressor with DL(Damper Limiter) pulley. (Models with 2AZ-FE engine)		

Plasmacluster™ is a trademark of Sharp Corporation

▶PERFORMANCE AND SPECIFICATION

1. Performance

Heater	Heat Output	W	6000
	Air Flow Volume	m^3/h	360
	Power Consumption	W	Maximum 210
Air Conditioning	Cooling Capacity	W	6100
	Air Flow Volume	m^3/h	530
	Power Consumption	W	Maximum 260

2. Specification

Ventilation and Heater Core	Heater Core	Type		SFA (Straight Flow Aluminum) -II
		Size W x H x L mm (in.)		201.5 x 150 x 27 (7.9 x 5.9 x 1.1)
		Fin Pitch mm (in.)		1.5 (0.06)
	Blower	Motor Type		K70 BMM
		Fan Type		Semi Sirocco
		Fan Size Dia. x H mm (in.)		165 x 70 (6.5 x 2.8)
Air Conditioning	Condenser	Type		MF (Multi-Flow) -IV
		Size W x H x L mm (in.)		720 x 370.2 x 16 (28.3 x 14.6 x 0.6)
		Fin Pitch mm (in.)		3.15 (0.12)
	Evaporator	Type		RS (Revolutionary super-slim Structure)
		Size W x H x L mm (in.)		266.3 x 251 x 38 (10.5 x 9.9 x 1.5)
		Fin Pitch mm (in.)		2.6 (0.1)
	Compressor	Type	2GR-FE	6SBU16
			2AZ-FE	6SEU16
		Pulley	2GR-FE	Steel with Magnetic Clutch
			2AZ-FE	DL (Damper Limiter) without Magnetic Clutch
	Refrigerant	Type		HFC 134a
		Charge Volume g		450 to 550

▪ SYSTEM DIAGRAM

▶ Automatic Air Conditioning ●

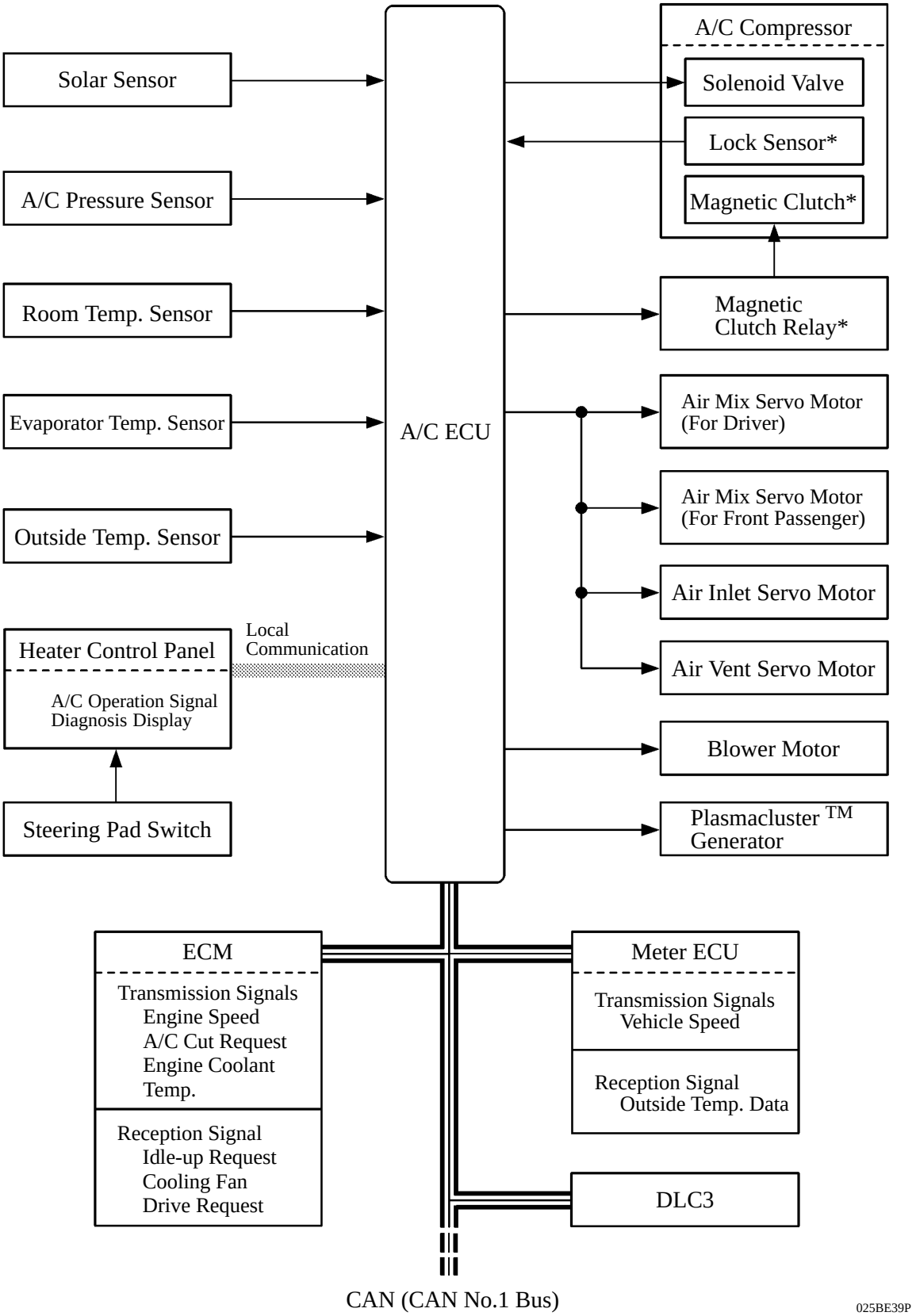

*: Only for models with 2GR-FE engine

▶ Manual Air Conditioning ●

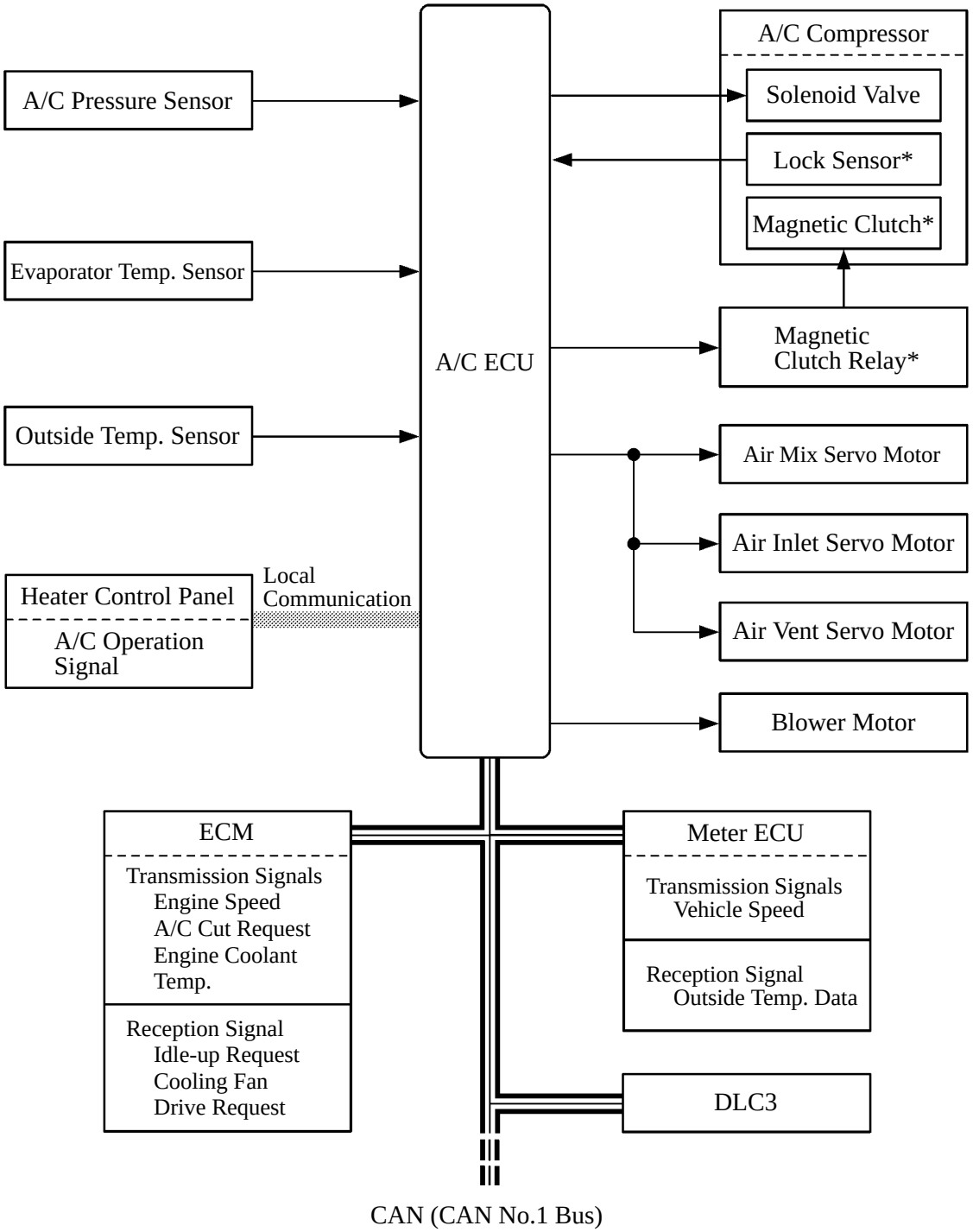

025BE40P

*: Only for models with 2GR-FE engine

●LAYOUT OF MAIN COMPONENTS

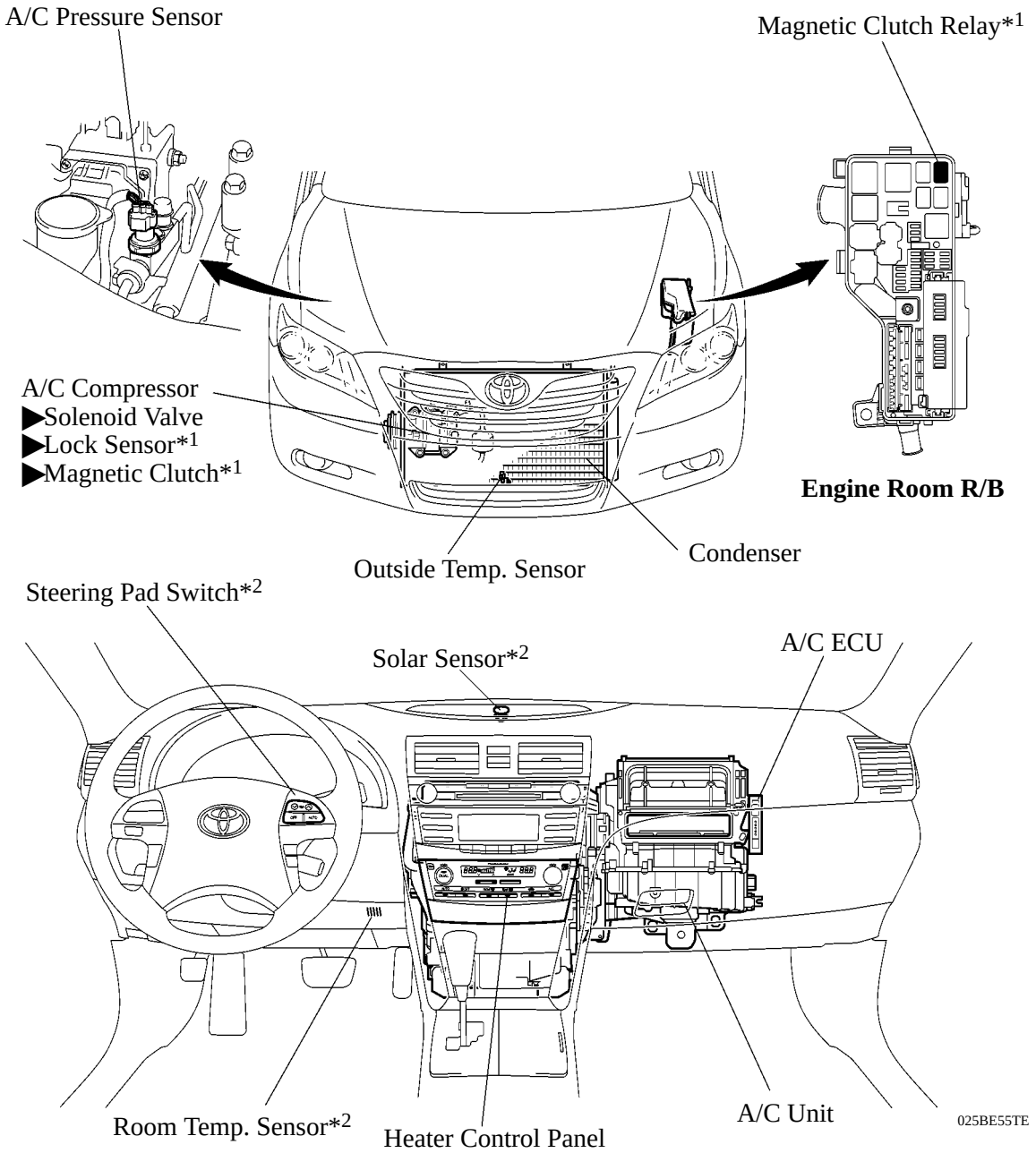

*1: Only for models with 2GR-FE engine
*2: Only for models with automatic air conditioning

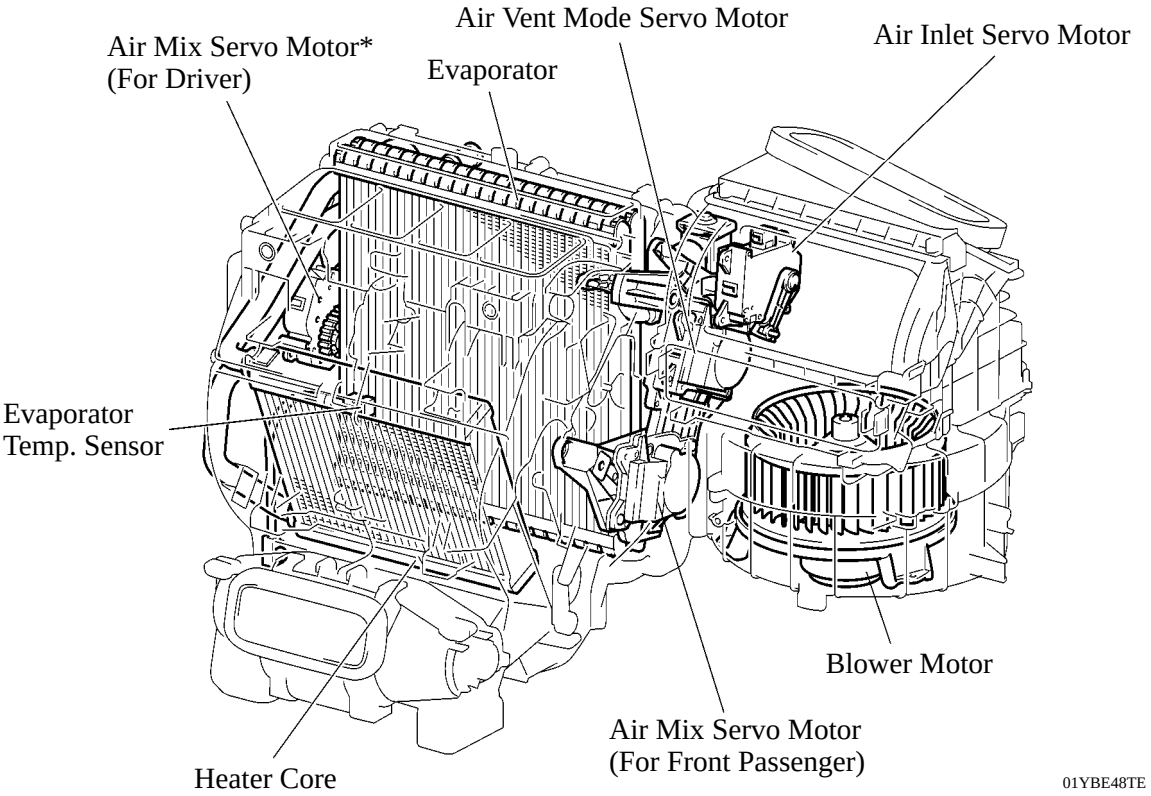

A/C Unit

*: Only for models with automatic air conditioning

MODE POSITION AND DAMPER OPERATION

1. Automatic Air Conditioning

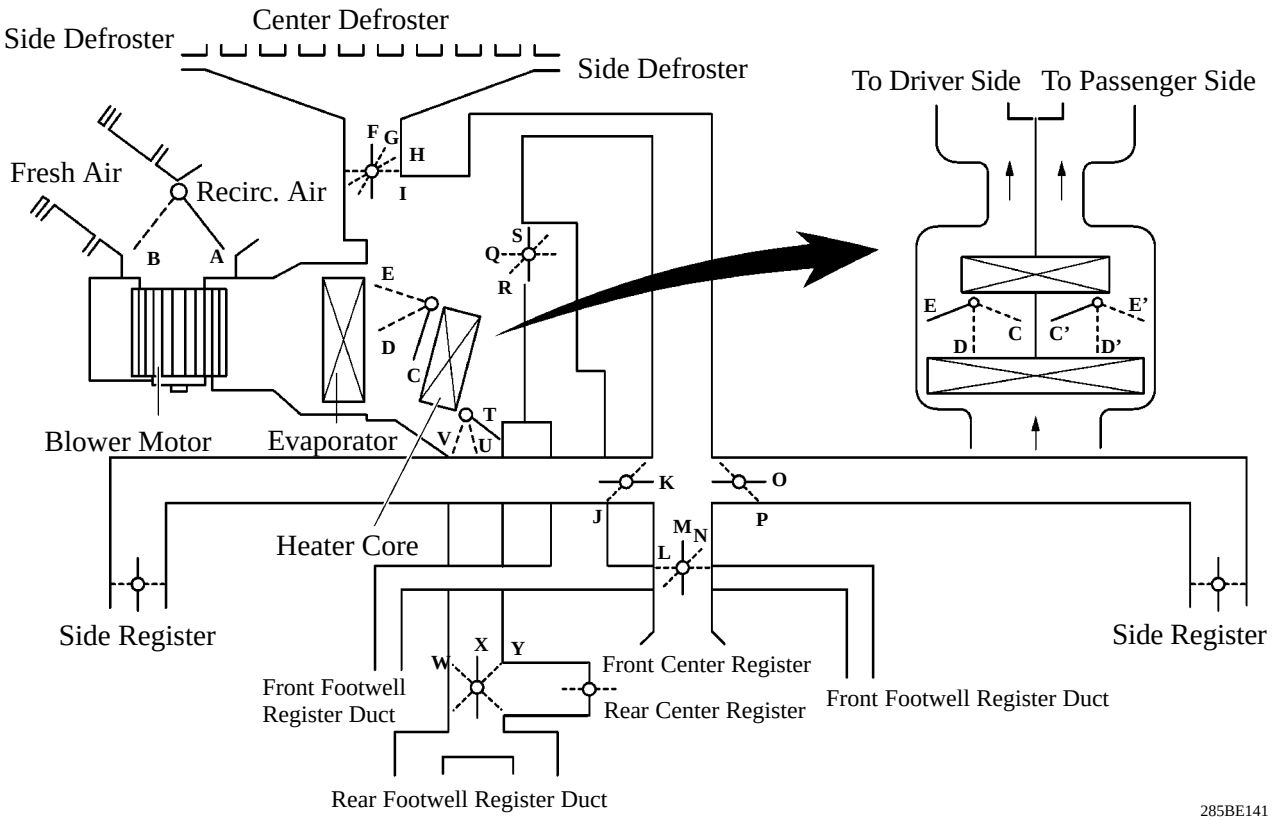

▶ **Function of Main Damper ●**

Control Damper	Operation Position	Damper Position	Operation
Air Inlet Control Damper	FRESH	A	Brings in fresh air.
	RECIRC	B	Recirculates internal air.
Air Mix Control Damper	MAX COLD to MAX HOT Temp. Setting	C - D - E (C' - D' - E') T - U - V	Varies the mixture ratio of the fresh air and the recirculation air in order to regulate the temperature continuously from HOT to COLD.
Mode Control Damper	DEF 187BE28	F, J, L, P, S, Y	Defrosts the windshield through the center defroster, side defroster, and side register.
	FOOT/DEF 187BE27	G, J, L, P, Q, X	Defrosts the windshield through the center defroster, side defroster, side register, and rear center register, while air is also blown out from the front and rear footwell register ducts.
	FOOT 187BE26	H, J, L, P, Q, X	Air blows out of the footwell register dust, and side register. In addition, air blows out slightly from the center defroster and side defroster.
	BI-LEVEL 187BE25	I, K, N, O, R, X	Air blows out of the front and rear center registers, side register and front and rear footwell register ducts.
	FACE 187BE24	I,K, M, O, S, W	Air blows out of the front and rear center registers, and side register.

2. Manual Air Conditioning

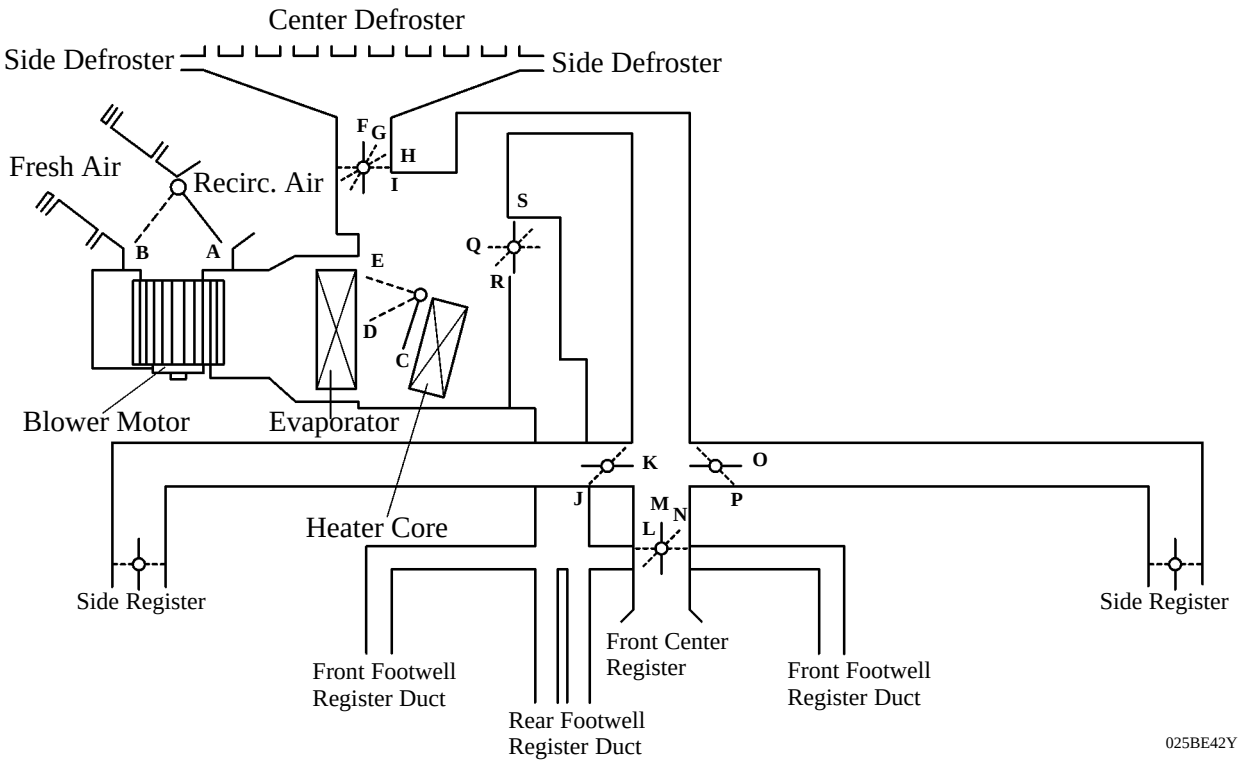

▶ Function of Main Damper ●

Control Damper	Operation Position	Damper Position	Operation
Air Inlet Control Damper	FRESH	A	Brings in fresh air.
	RECIRC	B	Recirculates internal air.
Air Mix Control Damper	MAX COLD to MAX HOT Temp. Setting	C - D - E	Varies the mixture ratio of the fresh air and the recirculation air in order to regulate the temperature continuously from HOT to COLD.
Mode Control Damper	DEF 187BE28	F, J, L, P, S	Defrosts the windshield through the center defroster, side defroster, and side register.
	FOOT/DEF 187BE27	G, J, L, P, Q	Defrosts the windshield through the center defroster, side defroster, and side register, while air is also blown out from the front and rear footwell register ducts.
	FOOT 187BE26	H, J, L, P, Q	Air blows out of the footwell register dust, and side register. In addition, air blows out slightly from the center defroster and side defroster.
	BI-LEVEL 187BE25	I, K, N, O, R	Air blows out of the front center register, side register and front and rear footwell register ducts.
	FACE 187BE24	I, K, M, O, S	Air blows out of the front center register and side register.

▶AIR OUTLETS AND AIRFLOW VOLUME

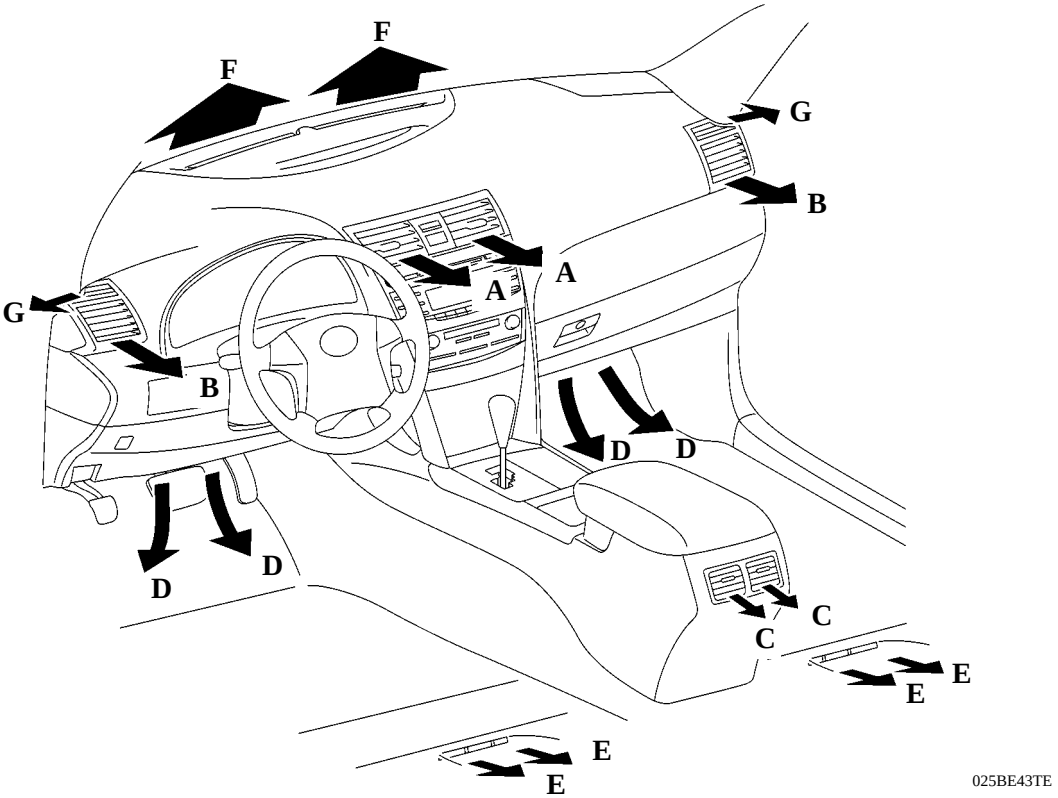

INDICATION	MODE	SELECTION		FACE			FOOT		DEF	
				CTR	SIDE	RR	FR	RR	CTR	SIDE
		AUTO	MANUAL	A	B	C*6	D	E	F	G
187BE24	FACE	○	○	◯	◯	◯	—	—	—	—
187BE25	B/L-U*1	○	○	◯	◯	◯	○	○	—	—
	B/L-L*2	○	—	○	○	○	◯	◯	—	—
187BE26	FOOT-F*3	○	○	—	○	○	◯	○	○	○
	FOOT-R*4	○	—	—	○	○	◯	◯	○	○
	FOOT-D*5	○	—	—	○	○	○	○	○	○
187BE27	F/D	○	○	—	○	○	◯	◯	○	○
187BE28	DEF	○	○	—	○	—	—	—	◯	◯

The size of the circle ● indicates the proportion of airflow volume.

*1: Greater airflow volume at the upper area.
*2: Greater airflow volume at the lower area.
*3: Greater airflow volume at the front.
*4: Greater airflow volume at the rear.
*5: Greater airflow volume at the defroster.
*6: Only for models with automatic air conditioning.

●CONSTRUCTION AND OPERATION

1. Heater Control Panel and Steering Pad Switch

▶2 types of heater control panel are used on the ’07 Camry, differing between models with automatic air conditioning and those with manual air conditioning.

▶On models with automatic air conditioning, some A/C operations (AUTO operation, A/C OFF and driver side temperature setting) can be performed using the steering pad switches (AUTO, OFF and TEMP) on the steering wheel.

▶On models with automatic air conditioning, the air conditioning status is displayed on an LCD (Liquid Crystal Display) panel.

▶On models with automatic air conditioning, as part of the right/left independent temperature control, the temperature control switches for the driver and the front passenger have been located closer to the respective seats for enhanced ease of use.

▶On models with manual air conditioning, the MAX A/C setting is provided on the temperature control switch to improve cooling efficiency. For details, refer to MAX A/C control described in the table on BE-59.

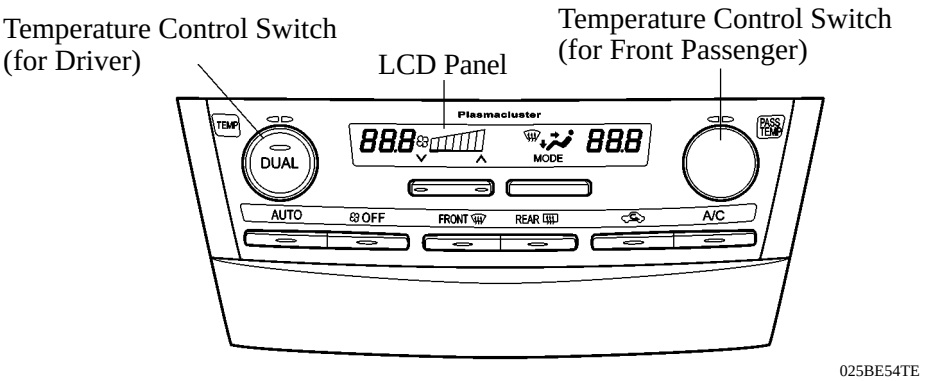

Models with Automatic Air Conditioning

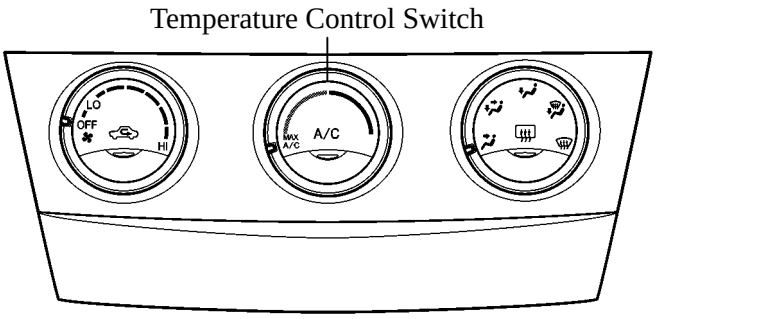

Models with Manual Air Conditioning

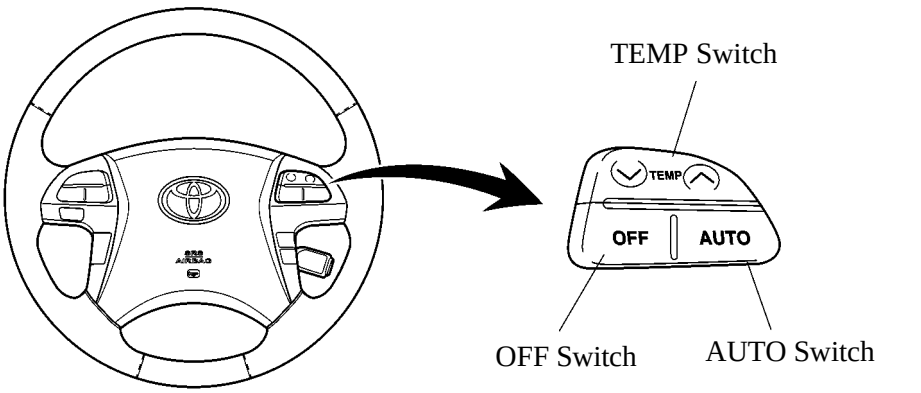

Steering Pad Switch

2. Air Conditioning Unit

General

A semi-center location air conditioning unit, in which the evaporator and heater core are placed in the vehicle's longitudinal direction, is used. As a result, the air conditioning unit has been made compact and lightweight.

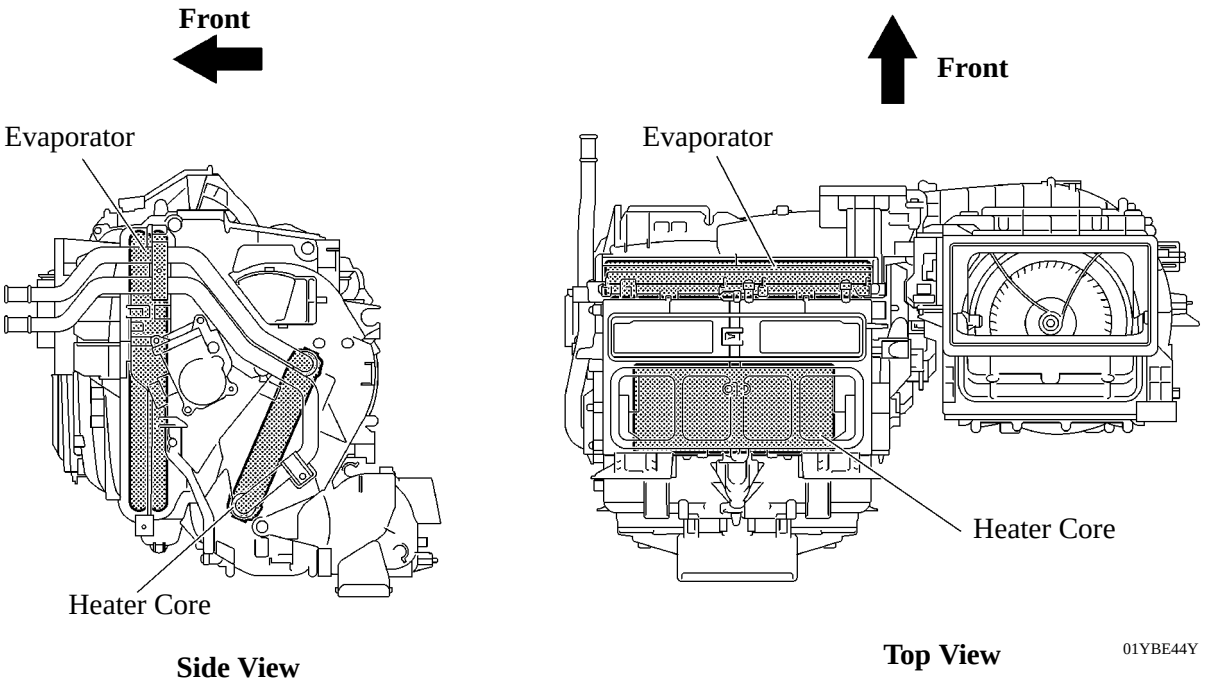

Heater Core

A compact, lightweight, and highly efficient SFA (Straight Flow Aluminum)-II type heater core is used.

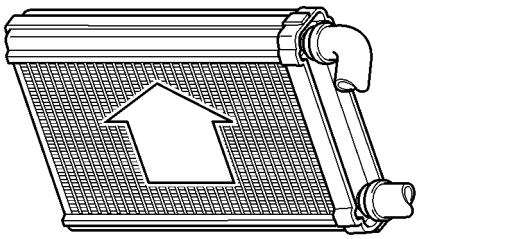

Evaporator

A semi-center location air conditioning unit, in which the evaporator and heater core are placed in the vehicle's longitudinal direction, is used. As a result, the air conditioning unit has been made compact and lightweight.

▶ A revolutionary super-slim structure evaporator is used.

▶ By placing the tanks at the top and the bottom of the evaporator unit and adopting a micropore tube construction, the following effects have been realized:

a) The heat exchanging efficiency has been improved.

b) The temperature distribution has been made more uniform.

c) The evaporator has been made thinner. 58 mm (2.3 in.) Δ 38 mm (1.5 in.)

▶ The evaporator body has been coated with a type of resin that contains an antibacterial agent in order to minimize the source of foul odor and the propagation of bacteria. The substrate below this coating consists of a chromate-free layer to help protect the environment.

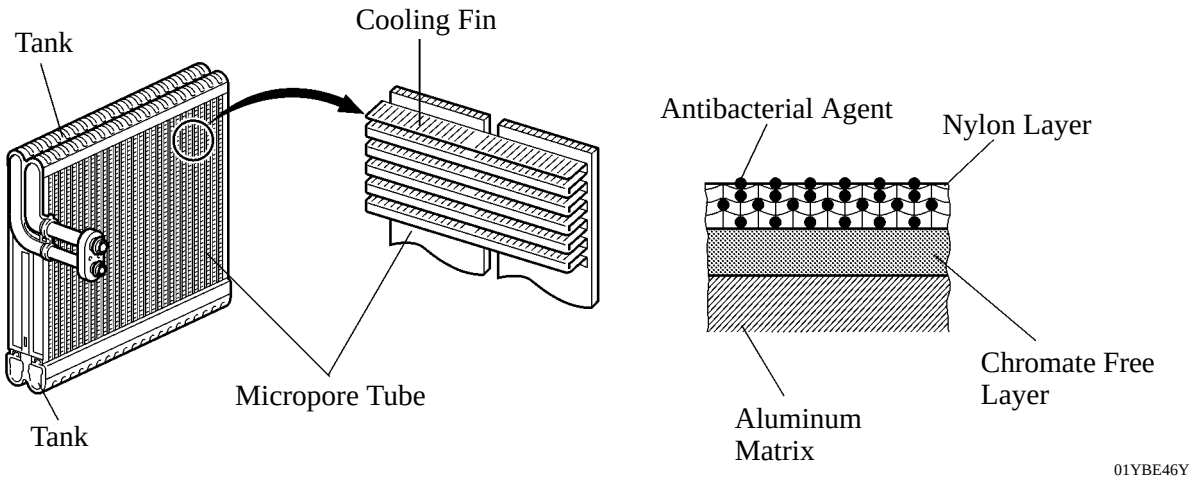

Evaporator Temp. Sensor

Evaporator temp. sensor detects the temperature of the cool air immediately past the evaporator in the form of resistance changes, and outputs it to the A/C ECU.

Blower Motor

The blower motor has an in-built blower controller, and is controlled with the duty control from the A/C ECU.

BUS Connector

▶A BUS connector is used in the wire harness connection that connects the servo motor from the A/C ECU.

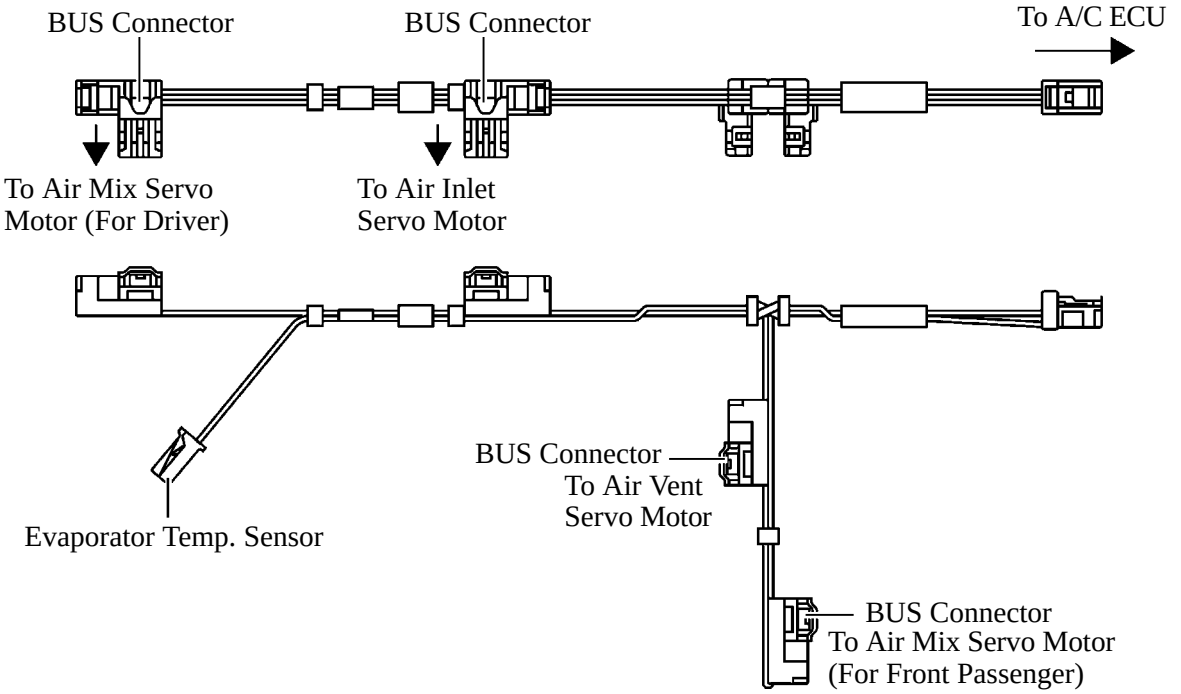

285BE43

▶The BUS connector has a built-in communication/drive IC which communicates with each servo motor connector, actuates the servo motor, and has a position detection function. This enables bus communication for the servo motor wire harness, for a more lightweight construction and a reduced number of wires.

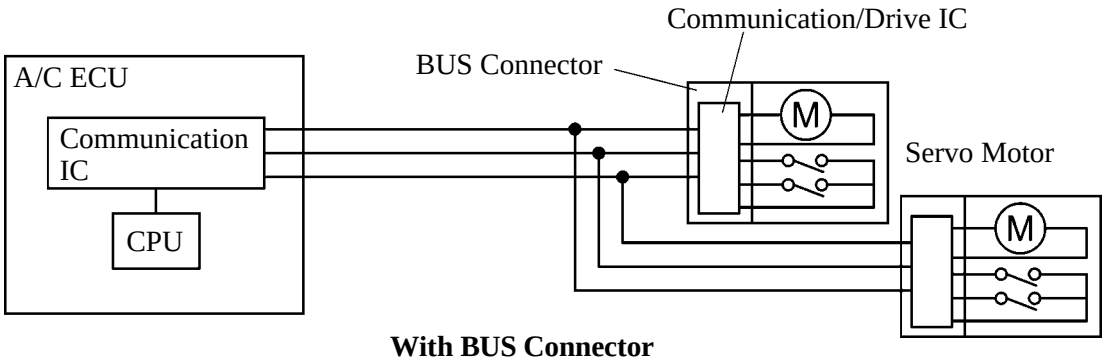

With BUS Connector

285BE44

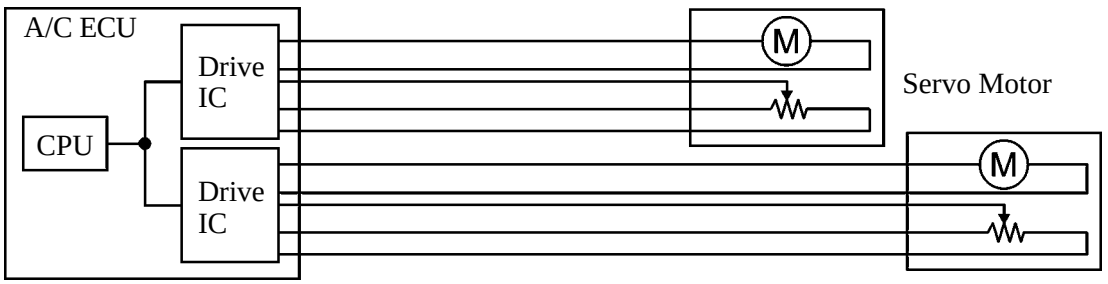

Without BUS Connector

285BE45

Servo Motor

The pulse pattern type servo motor consists of a printed circuit board and servo motor. The printed circuit board has three contact points, and transmits to the A/C ECU two ON-OFF signals for the difference of the pulse phase. The smart connector detects the damper position and movement direction with this signal.

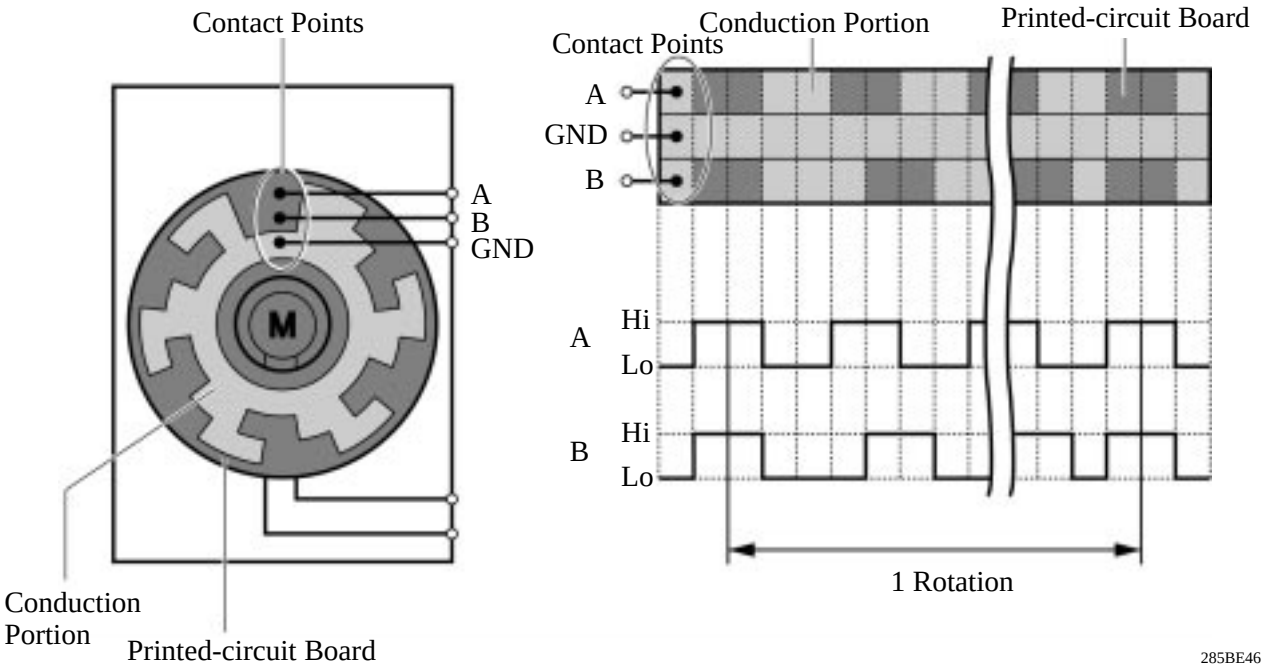

Clean Air Filter

A micro dust and pollen filter is used. This filter excels in the removal of dust and pollen. The filter is made of polyester. Thus, it can be disposed of easily as a non hazardous combustible material, a feature that is provided in consideration of the environment.

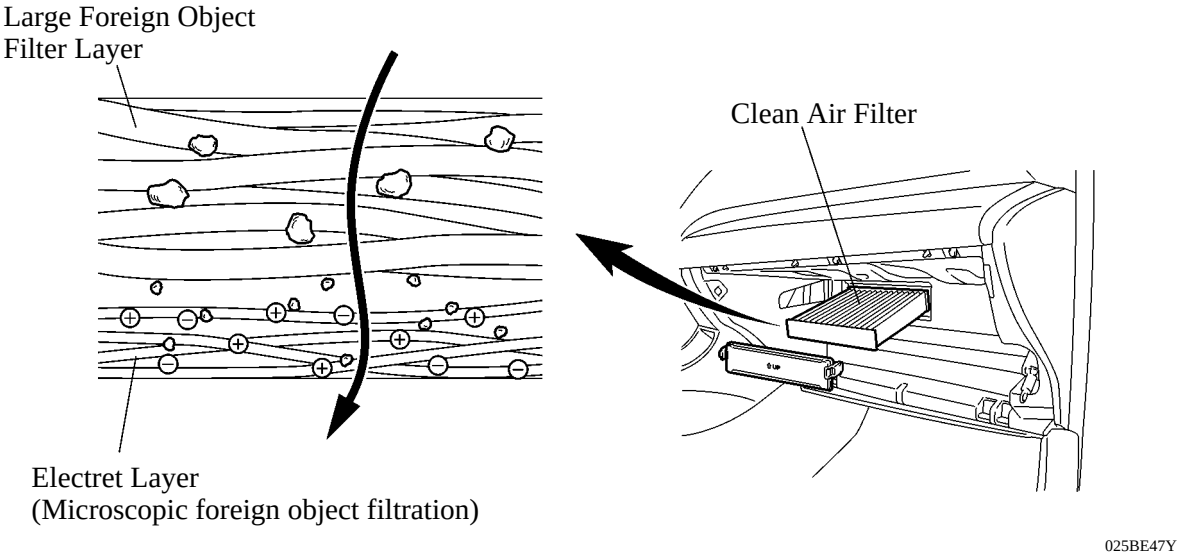

Service Tip

- ▶ The filter used on U.S.A. models should be changed at 30,000 miles. (cleaning interval: 15,000 miles).
- ▶ The filter used on Canadian package models should be changed at 16,000 km. (cleaning interval: 8,000 km).
- ▶ The filter used on Mexican package models should be changed at 30,000 km under normal conditions (cleaning interval: 10,000 km). Under dusty conditions, the filter should be changed at 15,000 km (cleaning interval: 5,000 km).

However, observation of these guidelines should depend on the usage conditions (or environment).

3. Condenser

▶ A MF (Multi-Flow) type condenser is used. The condenser consists of two cooling portions: a condensing portion and a super-cooling portion, and gas-liquid separator (modulator) are integrated together. This condenser uses a sub-cool cycle that offers excellent heat-exchange performance.

▶ In the sub-cool cycle, after the refrigerant passes through the condensing portion of the condenser, both the liquid refrigerant and the gaseous refrigerant that could not be liquefied are cooled again in the super-cooling portion. Thus, the refrigerant is sent to the evaporator in an almost completely liquefied state.

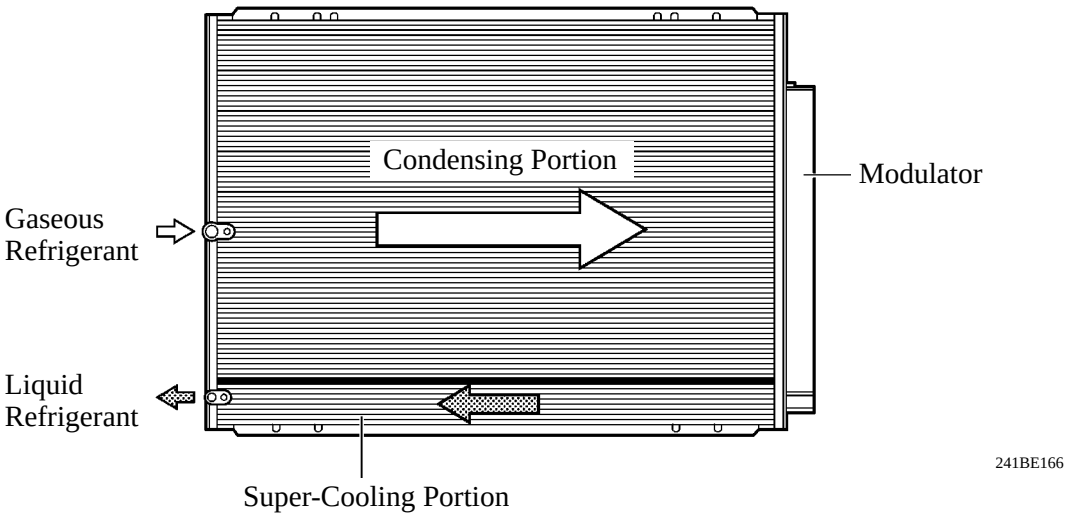

Service Tip

The point at which the air bubbles disappear in the refrigerant of the sub-cool cycle is lower than the proper amount of refrigerant with which the system must be filled. Therefore, if the system recharged with refrigerant based on the point at which the air bubbles disappear, the amount of refrigerant would be insufficient. As a result, the cooling performance of the system will be affected. If the system is overcharged with refrigerant, this will also lead to a reduced performance.
For the proper method of verifying the amount of the refrigerant and for instructions on how to recharge the system with refrigerant, see the 2007 Camry Repair Manual (Pub. No. RM0250U).

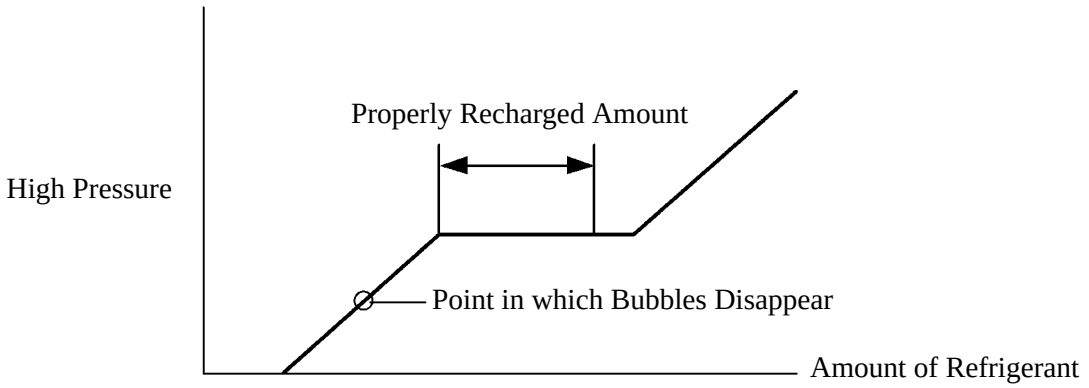

4. A/C Compressor

General

- ▶The A/C compressor is a continuously variable capacity type in which its capacity can be varied in accordance with the cooling load of the air conditioning.
- ▶This compressor consists of the A/C pulley, shaft, lug plate, swash plate, piston, shoe, crank chamber, cylinder, and solenoid valve.
- ▶The A/C pulley with built-in magnetic clutch and the lock sensor that detects whether the magnetic clutch is locked are installed on models with the 2GR-FE engine.
- ▶The DL (Damper Limiter) type A/C pulley is installed on models with the 2AZ-FE engine.
- ▶A solenoid valve that adjusts the suction pressure so that the compressor capacity can be controlled as desired is provided.
- ▶The internal valve is provided on models with 2AZ-FE engine to improve the A/C compressor durability under the high speed and large thermal load conditions. The internal valve is integrated into the solenoid valve.

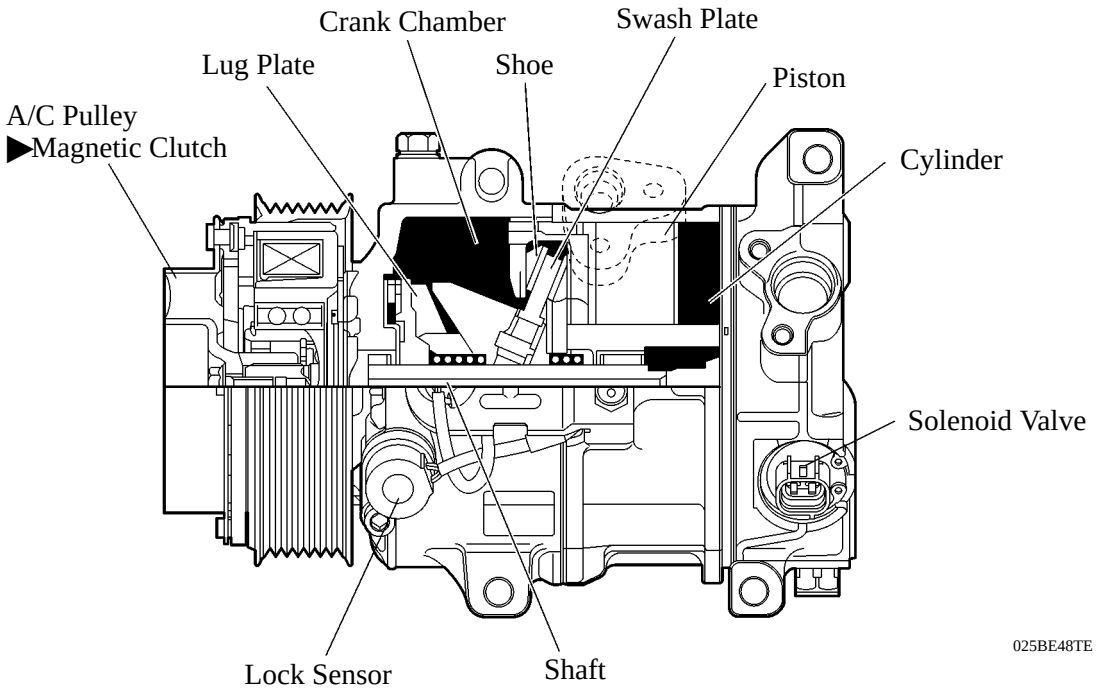

A/C Compressor for Models with 2GR-FE Engine

Lock Sensor (Only for Models with 2GR-FE Engine)

The lock sensor sends A/C pulley speed signals to the A/C ECU. The A/C ECU determines whether the magnetic clutch is locked or not by using those signals and engine speed signals.

Solenoid Valve Operation

▶The crank chamber is connected to the discharge passage. A solenoid valve is provided between the discharge passage (LO pressure) and the discharge passage (HI pressure).

▶The solenoid valve operates under duty cycle control in accordance with the signals from A/C ECU.

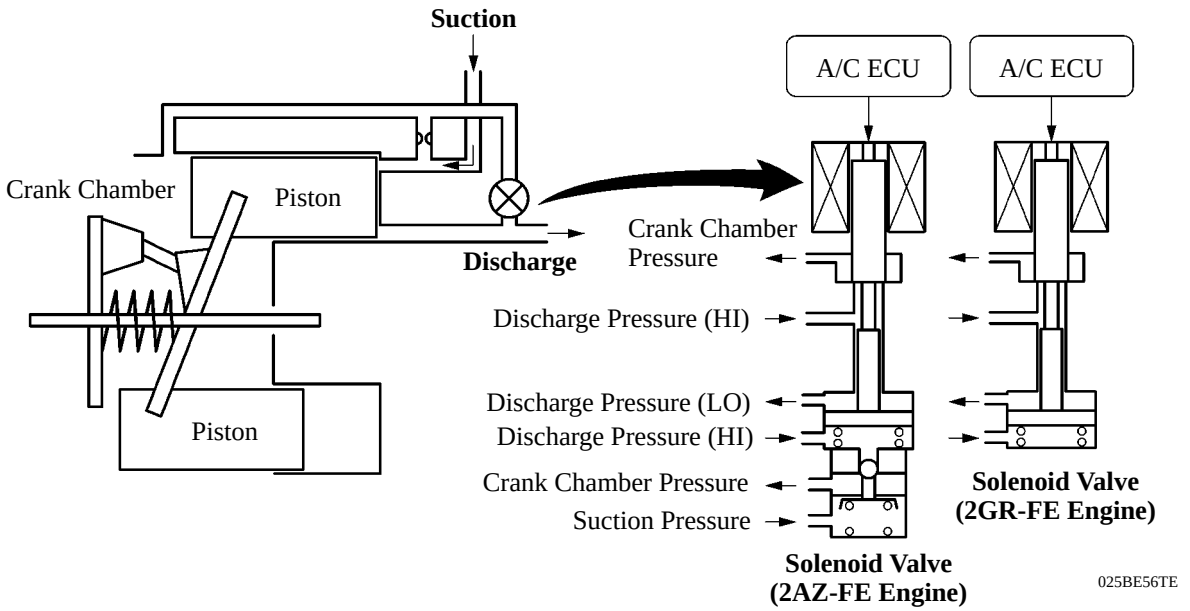

▶When the solenoid valve closes (solenoid coil is energized), a difference in pressure is created and the pressure in the crank chamber decreases. Then, the pressure that is applied to the right side of the piston becomes greater than the pressure that is applied to the left side of the piston. This compresses the spring and tilts the swash plate. As a result, the piston stroke increases and the discharge capacity increases.

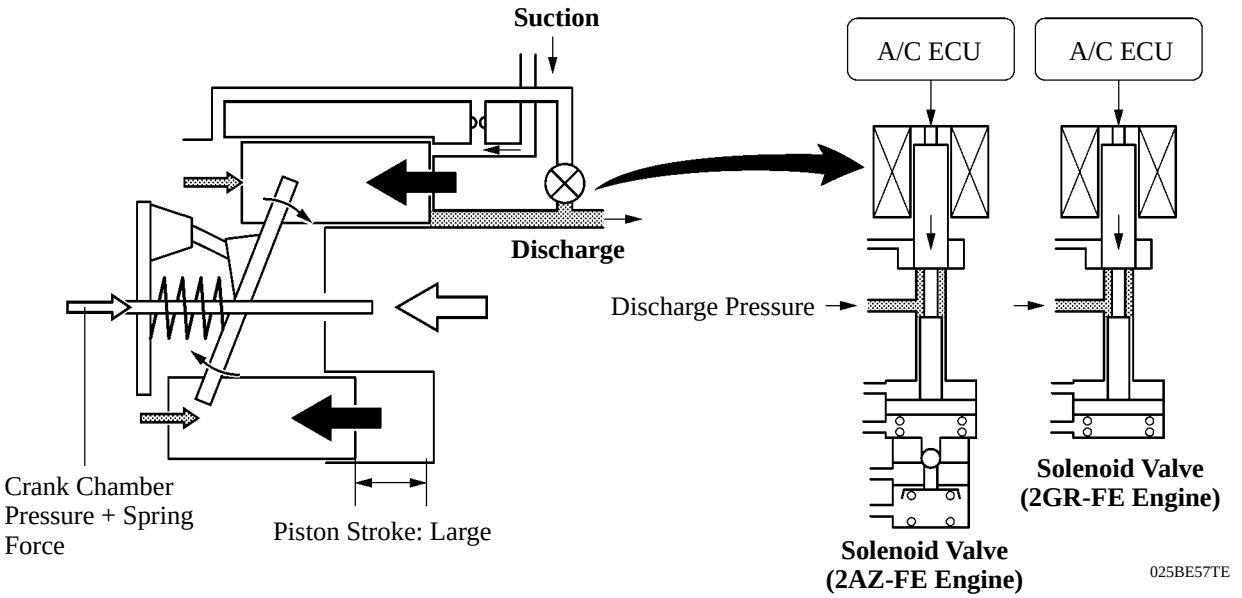

▶When the solenoid valve opens (solenoid coil is not energized), the difference in pressure disappears. Then, the pressure that is applied to the left side of the piston becomes the same as the pressure that is applied to the right side of the piston. Thus, the spring elongates and eliminates the tilt of the swash plate. As a result, there is no piston stroke and the discharge capacity is reduced.

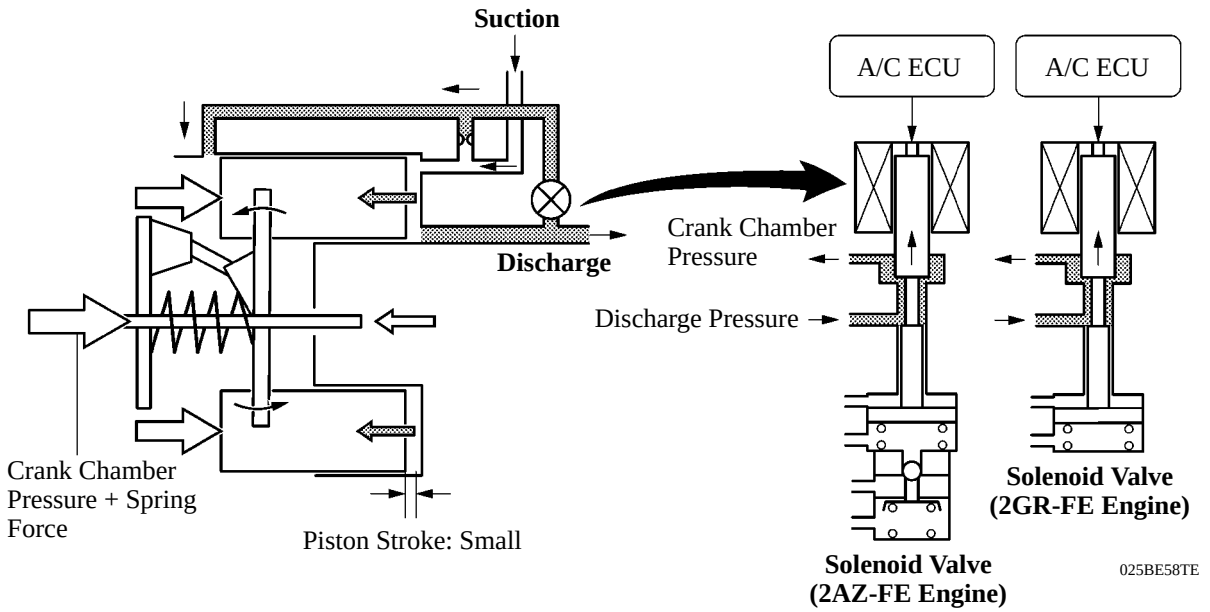

Internal Valve Operation (Only for Models with 2AZ-FE Engine)

The internal valve operates when the A/C compressor speed has increased rapidly, the A/C compressor speed is high, or when thermal load has suddenly changed. As a result, the A/C compressor capacity is reduced, increasing the durability of the A/C compressor.

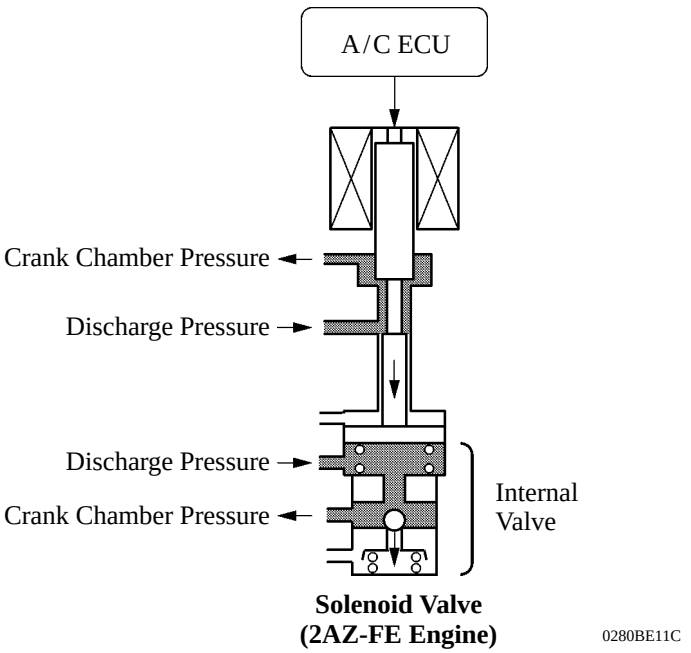

DL type A/C Pulley (Only for Models with 2AZ-FE Engine)

This pulley contains a damper to absorb the torque fluctuations of the engine and a limiter mechanism to protect the drive belt in case the compressor locks. In the event that the compressor locks, the limiter mechanism causes the spoke portion of the pulley to break, thus separating the pulley from the compressor.

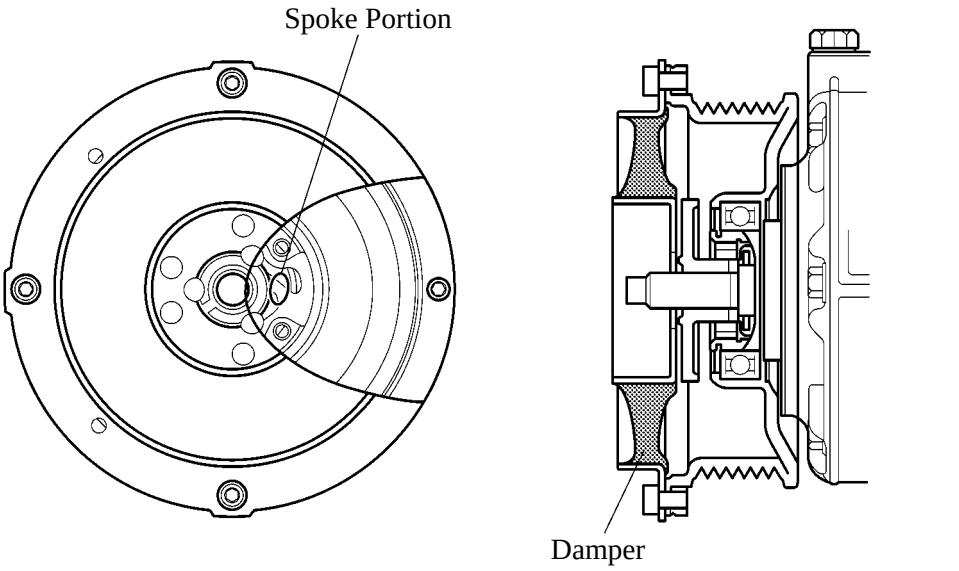

Limiter Mechanism

5. A/C Pressure Sensor

A/C pressure sensor detects the refrigerant pressure and outputs it to the A/C ECU in the form of voltage changes.

6. Room Temp. Sensor and Outside Temp. Sensor

▶ The room temperature sensor detects the room temperature based on changes in the resistance of its built-in thermistor and sends a signal to the A/C ECU. This sensor is used on models with automatic air conditioning.

▶ The outside temperature sensor detects the outside temperature based on changes in the resistance of its built-in thermistor and sends a signal to the A/C ECU.

7. Solar Sensor

▶ The solar sensor consists of a photo diode, two amplifier circuits for the solar sensor, and a frequency converter circuit for the light control sensor. This sensor is used on models with automatic air conditioning.

▶ A solar sensor detects (in the form of changes in the current that flows through the built-in photo diode) the changes in the amount of sunlight from the LH and RH sides (2 directions) and outputs these sunlight strength signals to the A/C ECU.

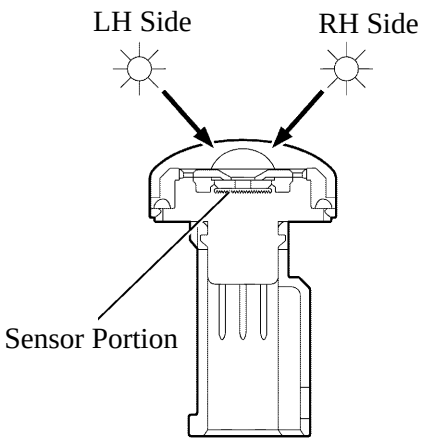

Internal circuit of the solar sensor

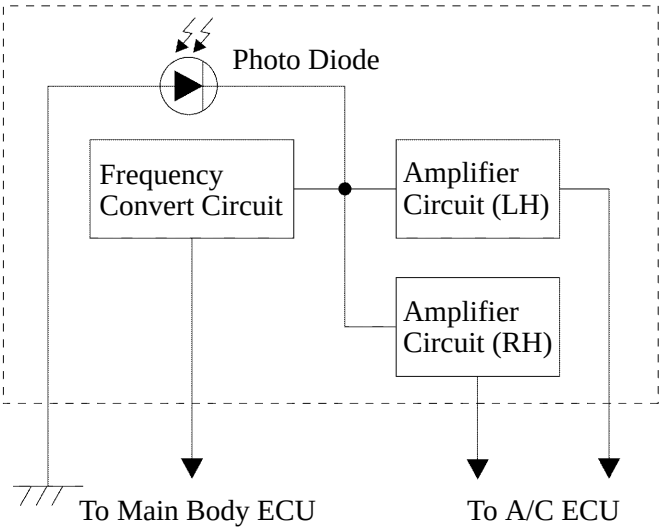

0140BE235C

8. Plasmacluster™ Generator

General

▶ A Plasmacluster™ generator is provided inside the air duct of the side register on the driver seat side to improve the air quality and comfort in the cabin.

▶ This generator is controlled by the A/C ECU and operates in conjunction with the blower motor.

Behind the Combination Meter

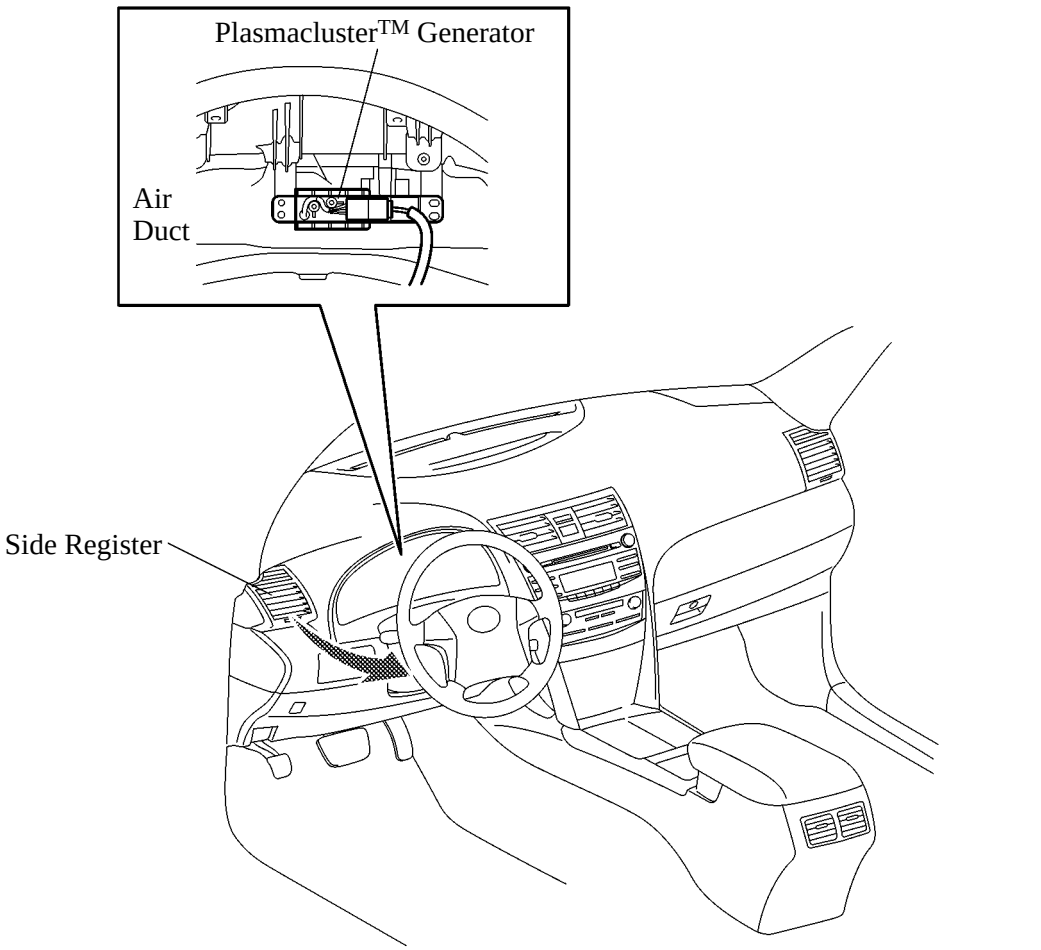

025BE50TE

NOTE:

▶ The Plasmacluster™ generator uses a high voltage, which is hazardous. Therefore, if the Plasmacluster™ generator requires repairs, be sure to have them done at a Toyota dealer.

▶ Do not apply any type of spray (such as a cleaning solvent or hair spray) or stick any foreign matter into the Plasmacluster™ ion outlet, as this could cause improper operation or a malfunction.

▶ After use, dust may accumulate around the side register on the driver seat side. If this occurs, press the OFF switch on the heater control panel to stop the blower motor before cleaning the area.

▶ It is normal for the Plasmacluster™ generator to emit a slight sound during operation. This sound is created when electrons collide with the electrode while Plasmacluster™ ions are being generated.

Operation

The Plasmacluster™ generator produces positive and negative ions from the water molecules (H_2O) and oxygen molecules (O_2) in the air, and emits them into the air. These ions reduce airborne germs.

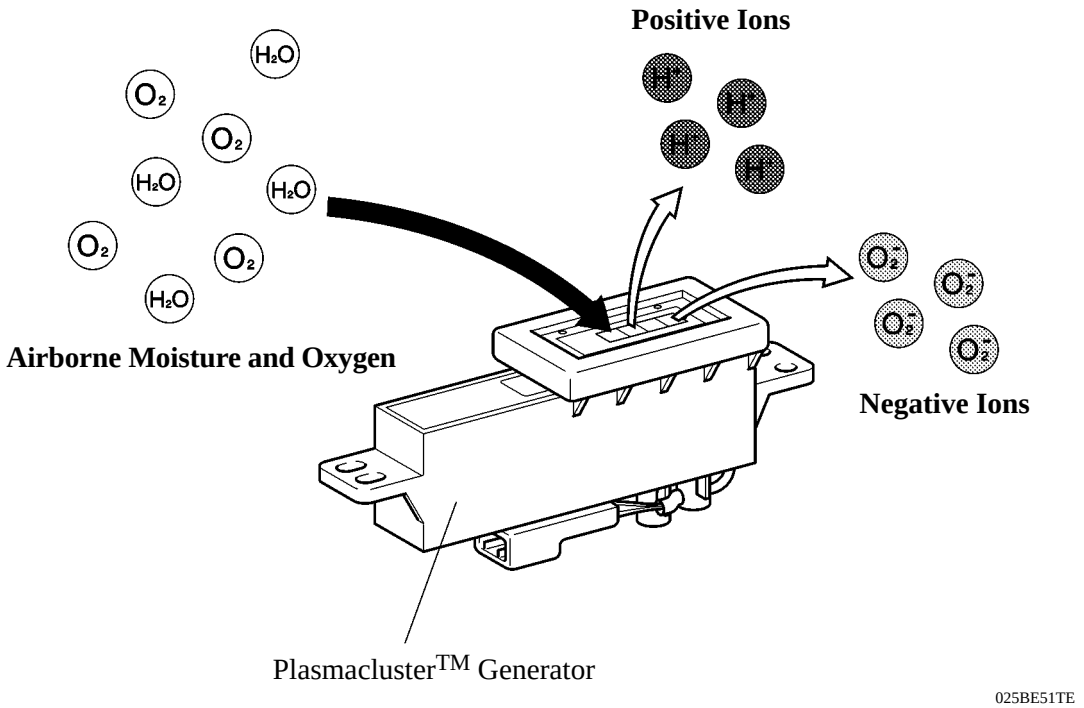

025BE51TE

●SYSTEM CONTROL

1. General

The air conditioning system has the following controls.

Control	Outline	Automatic A/C	Manual A/C
Neural Network Control [See page BE-60]	This control is capable of effecting complex control by artificially simulating the information processing method of the nervous system of living organisms in order to establish a complex input/output relationship that is similar to a human brain.		—
Manual Control	The A/C ECU controls the damper positions (air inlet control damper, air mix control damper and mode control damper) and blower speed in accordance with the positions of the switches (temperature control switch, blower switch, mode select switch and air inlet control switch).	—	
Outlet Air Temp. Control	Based on the temperature set at the temperature control switch, the neural network control calculates the outlet air temperature based on the input signals from various sensors.		—
	The temperature settings for the driver and front passenger are controlled independently in order to provide separate vehicle interior temperatures for the right and left sides of the cabin. Thus, air conditioning that accommodates the occupants' preferences has been realized.		—
Blower Control	Controls the blower motor in accordance with the airflow volume that has been calculated by the neural network control based on the input signals from various sensors.		—
Air Outlet Control	Automatically switches the air outlets in accordance with the outlet mode that has been calculated by the neural network control based on the input signals from various sensors.		—
	In accordance with the engine coolant temperature, outside air temperature, amount of sunlight, required blower, outlet temperature, and vehicle speed conditions, this control automatically switches the blower outlet to FOOT/DEF mode to prevent the windows from becoming fogged when the outside air temperature is low.		—
Air Inlet Control	Automatically controls the air inlet control damper to achieve the calculated required outlet air temperature.		—
Compressor Control	Through the calculation of the target evaporator temperature based on various sensor signals, the A/C ECU optimally controls the discharge capacity by regulating the opening extent of the A/C compressor solenoid valve.		
	The A/C ECU compares the A/C pulley speed signals, which are transmitted by the lock sensor located on the A/C compressor, with the engine speed signals, which are transmitted by the ECM (crankshaft position sensor). When the A/C ECU determines that the A/C pulley is locked, it turns off the magnetic clutch. (Only for models with 2GR-FE engine)		
MAX A/C Control	When the temperature control switch is in the MAX A/C position, the A/C ECU turns the compressor on and activates the servomotor (air inlet) to set the air inlet control damper to the RECIRC position, improving the cooling efficiency.	—	
Rear Window Defogger Control [See page BE-172]	Switches the rear defogger and outside rear view mirror heaters on for 15 minutes when the rear defogger button is pressed. Switches them off if the button is pressed again while they are operating.		
Outside Temperature Indication Control	Calculates the outside temperature using signals transmitted by the outside temperature sensor. Calculated values are corrected by the A/C ECU and then indicated on the multi-information display.		
Self-Diagnosis [See page BE-61]	A DTC (Diagnostic Trouble Code) is stored in the memory when the A/C ECU detects a problem with the air conditioning system.		

2. Neural Network Control

▶In previous automatic air conditioning systems, the A/C ECU determined the required outlet air temperature and blower air volume in accordance with the calculation formula that has been obtained based on information received from the sensors. However, because the senses of a person are rather complex, a given temperature is sensed differently, depending on the environment in which the person is situated. For example, a given amount of solar radiation can feel comfortably warm in a cold climate, or extremely uncomfortable in a hot climate. Therefore, as a technique for effecting a higher level of control, a neural network is used in the automatic air conditioning system. With this technique, the data that has been collected under varying environmental conditions is stored in the A/C ECU. The A/C ECU can then effect control to provide enhanced air conditioning comfort.

▶The neural network control consists of neurons in the input layer, intermediate layer, and output layer. The input layer neurons process the input data of the outside temperature, the amount of sunlight, and the room temperature based on the outputs of the switches and sensors, and output them to the intermediate layer neurons. Based on this data, the intermediate layer neurons adjust the strength of the links among the neurons. The sum of these is then calculated by the output layer neurons in the form of the required outlet temperature, solar correction, target airflow volume, and outlet mode control volume. Accordingly, the A/C ECU controls the servo motors and blower motor in accordance with the control volumes that have been calculated by the neural network control.

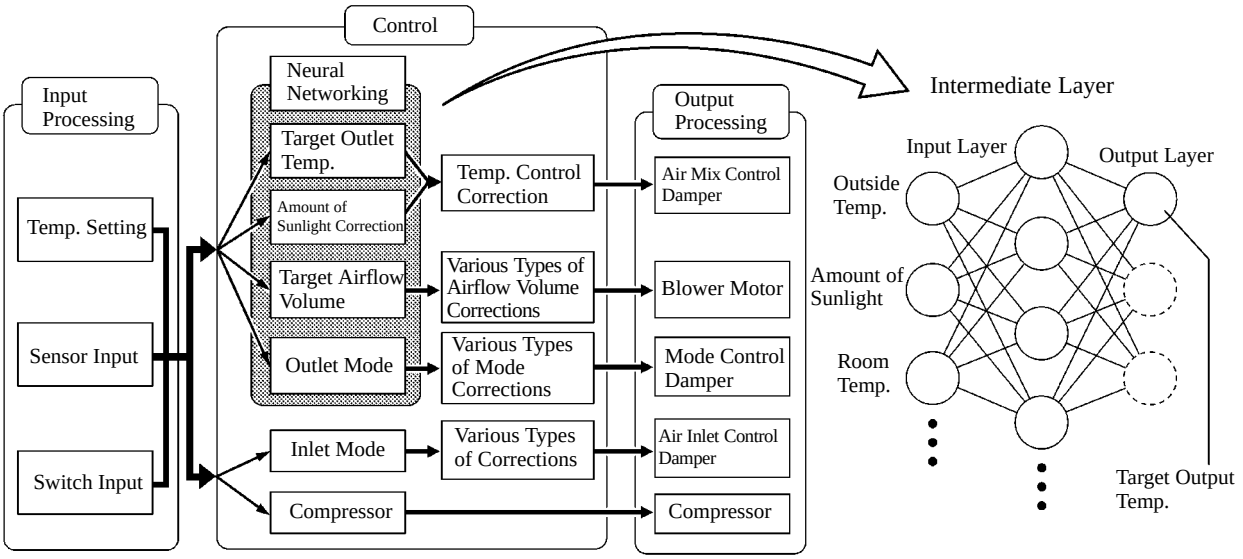

: Neural Network Operation Range

189BE109

3. Self-Diagnosis

▶ The A/C ECU has a self-diagnosis function. It stores any operation failures in the air conditioning system memory in the form of DTC (Diagnostic Trouble Code).

▶ There are two methods for reading DTC. One is to use a hand-held tester, and the other is to read DTC indicated on the heater control panel display (Only for models with automatic air conditioning).

▶ For details, see the 2007 Camry Repair Manual (Pub. No. RM0250U).

Service Tip

The A/C ECU uses the CAN protocol for diagnostic communication. Therefore, a hand-held tester and a dedicated adapter [CAN VIM (Vehicle Interface Module)] are required for accessing diagnostic data. For details, see the 2007 Camry Repair Manual (Pub. No. RM0250U).

NAVIGATION WITH AV SYSTEM

▪ DESCRIPTION

The navigation with AV system is available as an option on XLE grade*1 and SE grade*2 models of the ’07 Camry.

The design of the screen has been improved in the navigation with AV system in order to improve its visibility. Furthermore, new functions have been added for improved convenience.

A hands-free function for a Bluetooth-compatible cellular phone is used. (see page Bluetooth Hands-Free System section on page BE-68).

The major specifications of the navigation with AV system are shown in the table below:

*1: Except package models for dependent territories of U.S.A. and Mexico.
*2: Except package models for dependent territories of U.S.A.

▶ Specifications ●

Model			’07 Camry	’06 Camry
Display	7.0-inch wide LCD			—
	6.5-inch wide LCD		—	
	Pressure Sensitive Touch Panel			
	Manufactured by DENSO			
Navigation System	GPS			
Languages Supported	Voice Guidance	English, French and Spanish		—
		English and French	—	
Map Data Media	DVD			
Bluetooth Hands-Free System (see page BE-68)				—
Navigation ECU	Manufactured by DENSO			
	Gyro Sensor	Piezoelectric Ceramic Piece		

Bluetooth 001SI50Y

Bluetooth is a trademark owned by Bluetooth SIG, Inc.

▶ System Diagram ●

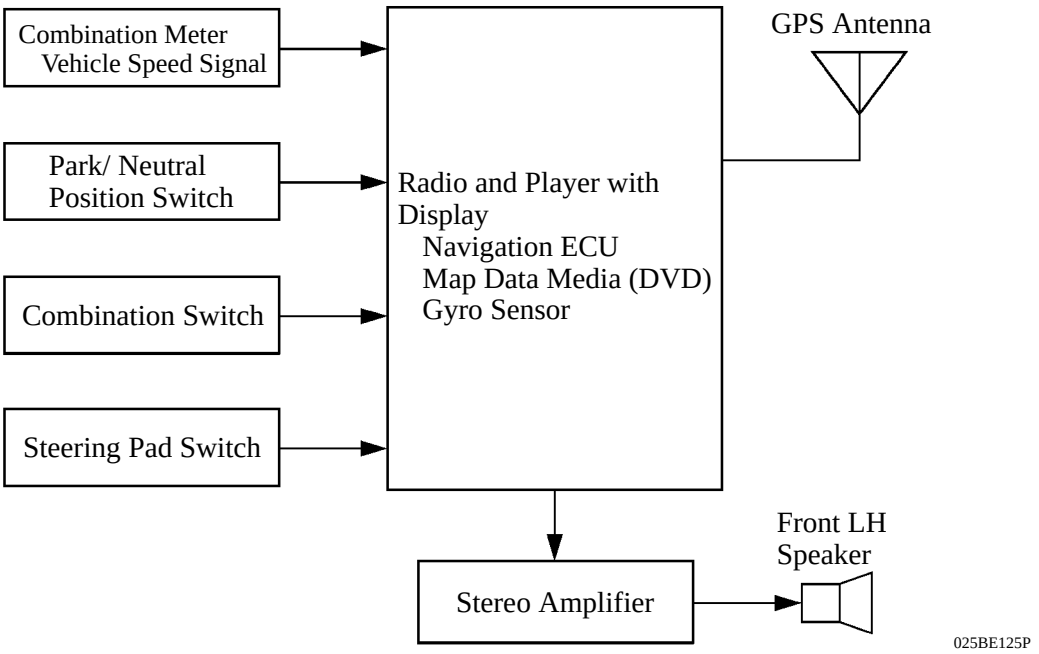

▪ LAYOUT OF MAIN COMPONENTS

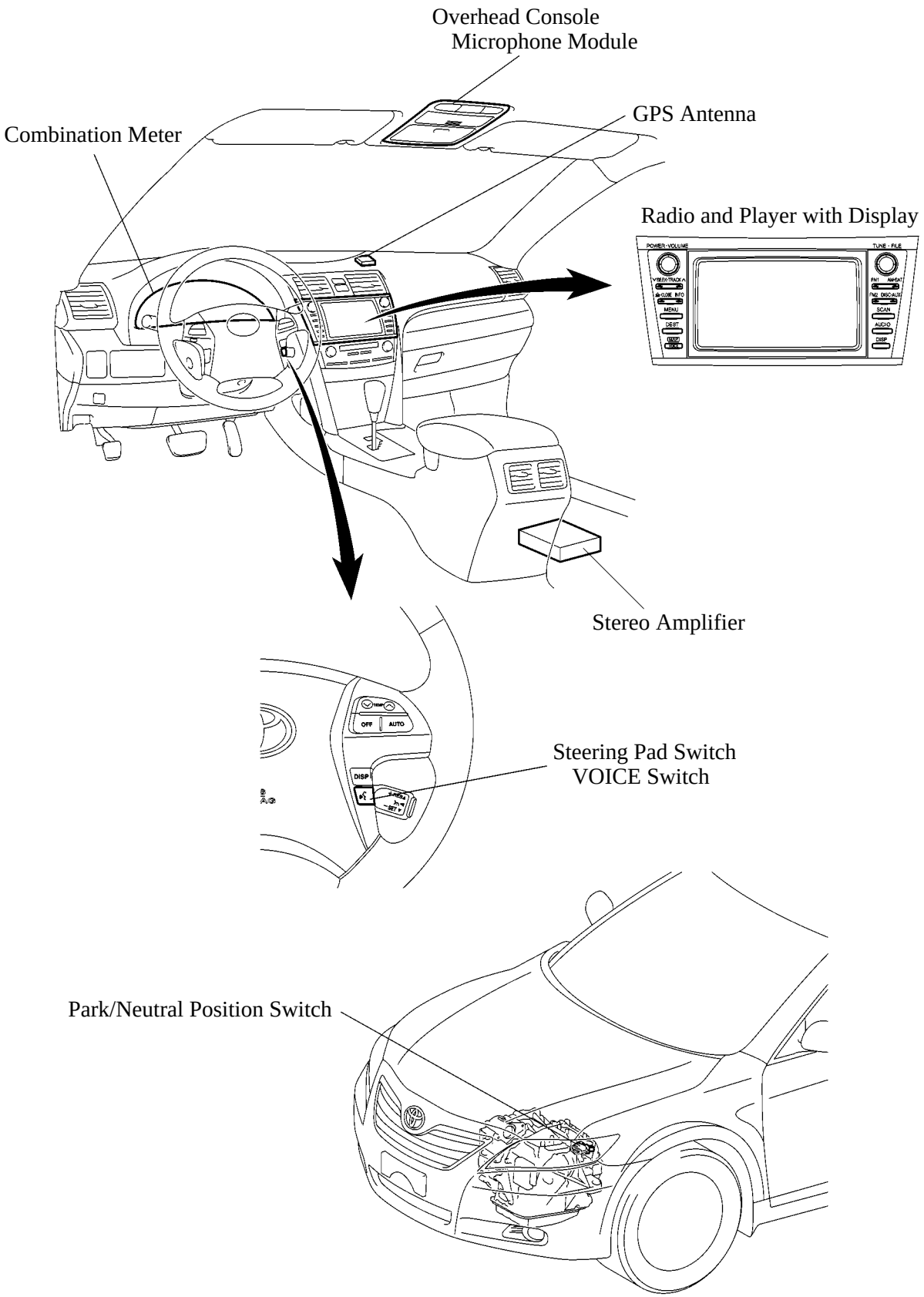

U660E Automatic Transaxle Model

▶CONSTRUCTION AND OPERATION

1. General

The main functions of navigation system are listed below.

Function	Outline
Navigation Screen Display	Enlargement/reduction, rotation and movement of map. Indication of current position and direction of travel. Correction of current position. Setting change and indication of route. Voice guidance. There are many additional functions.
Audio/Video System	Displays the following three operations: Radio Operation CD Changer Operation
Telephone Operation Screen Display	When a Bluetooth-compatible cellular telephone is registered on the radio and player with display, the driver can make and receive calls or talk hands-free on the cellular telephone by operating the switches on the screen or the steering pad.
Maintenance Information	Can be used to inform the driver of inspection or replacement timing of the following items based on the calendar function and vehicle speed signal. **Engine Oil**: Replace engine oil **Oil Filter**: Replace engine oil filter **Rotation**: Rotate tires **Tires**: Replace tires **Battery**: Replace battery **Brake Pad**: Replace brake linings **Wipers**: Replace wiper blades **LLC**: Replace engine coolant **Brake Oil**: Replace brake fluid **ATF**: Replace ATF **Service**: Scheduled maintenance **Air Filter**: Replace air filter **Personal**: New information items can be created separately form provided ones
Calendar with Memo	It is possible to enter memos for particular dates on the calendar.
Speech Command System	Operates the navigation system based on voice commands. However, only English can be recognized by this function.
Help Screen	Help screen can see the command list and operation guide on it.
Screen Adjustment	The brightness or contrast of the screen can be adjusted to suit the brightness of surroundings.
Screen Setting	The following screen settings are available: **Automatic transition**: In enables automatic return to the navigation screen from the audio screen. **Switch color**: Color of touch-screen button can selected.

(Continued)

Function	Outline
Delete Personal Data	The following personal data can be deleted or returned to their default settings: Maintenance conditions Maintenance information “off” setting Memory points Areas to avoid Previous points Route trace User selection settings Phone book data Dialed numbers and received calls Speed dial Bluetooth phone data Security code
Beep Setting	Beep sound off
Select Language	The language of the touch-screen buttons, pop-up messages and the voice guidance can be changed. English, French and Spanish are available.
Diagnosis Screen Display	Service Check Menu Display Check Navigation Check Bluetooth TEL Check

2. Navigation Screen Display

Based on the map data on the DVD, signal from the GPS satellites, signals from the built-in gyro sensor, and signals from the vehicle's speed sensor, the vehicle's present position, direction of travel, and driven distance are calculated and displayed on the navigation display.

The functions of the navigation screen display are shown below:

: New function

Item		Function
Map Display	Linear Touch Scroll	Enables smooth scrolling by connecting the touch points on the screen
	On-route Scroll	Scrolls the center of the cursor forward and reverse constantly along the route.
	Heading Up	Displays the map so that the direction of the route progression head up during route guidance.
	Map Color Change	Depending on the position of the headlight switch, the screen changes to the day mode or night mode.
	Front Wide	Displays a map in the direction of travel of the vehicle in an enlarged form. (Heading up only)
	Step-less Scale Display	Changes the scale of the map from the basic 13 steps to an even finer display.
	Direct Scale Change	Directly selects and displays the map scale.
	Multi-step Scale Display	Changes and displays the map scale in 13 stages.
	Split-view Display	Displays different modes on a screen that is split into two views.
	Points-of-Interest Display	Displays selected types of marks on the map.
	Taillight-interlocked Map Color Change	Changes the displayed color on the map screen when the taillights are turned ON.
	Road Number Sign Board Display	Displays the road number on the map.
	Compass Mode Screen	Displays the direction of travel and detailed data of the present location.
	Map Coverage Info Screen	Displays the map area that is recorded on DVD.
	Street Name Indication on Scrolled Map	Displays the street name and the city name even when the map screen is being scrolled.
	Foot Print Map	Displays the city maps of Chicago, Detroit, Los Angeles, and New York.
	Building Tenant Information (for foot print map areas)	Displays information on the tenants in the building.
	Arrival Time	Displays the expected time of arrival at the destination.
	Route Trace	Displays the route on the map.
Destination Search	Last Destination Memory	Stores 20 locations of coordinates, names and times that have been set as destinations in the past.
	Hybrid Points-of-interest Search	Narrows the search by names of the points-of-interest, category, and areas.
	Points-of-interest Pinpoint Display	Pinpoints and displays the position of the point-of-interest.
	House Number Search	Searches for a house number.
	Special Memory Point	Sets a pre-registered point as a destination point while driving.
	Nearest Point-of-interest Search List Display	Searches nearest points-of-interest and displays a list.
	Intersection Search	By specifying two streets, the point at which they intersect is set as the destination point.
	Emergency Search	Performs a specific search for hospitals, police stations and dealers.
	Freeway Entrance/ Exit Search	Searches for the destination by the name of the street that connects to a Freeway entrance/exit.
	Coordinate search	User can input destination like a oasis in the desert etc.
	Telephone number search	Searches a facility by its telephone number.
	POI, brand icon indication	Displays icons for points of interest.
	Voice-recognition Address Search	The driver can set the destination by saying the city name or street name.

(Continued)

Item		Function
Route Search	Multiple Destination Setting	Sets multiple destinations. It can also rearrange the sequence of the destinations.
	Route Search	Searches for multiple routes.
	Search Condition Designation	Searches for the recommended, shortest, and other routes.
	Regulated Road Consideration	Performs search while considering regulated roads.
	Avoidance Area	Avoids a designated area and searches a route.
	Freeway mode screen	Displays information on facilities in the vicinity of the freeway exits and entrances.
	National Border Conscious Search	As for as possible, searches for a route that does not cross the border between the U.S.A and Canada.
Guidance	Destination Direction Arrow Display	Uses arrows along the road to display the direction of the destination during route guidance.
	Off-Route Arrow Display	Uses arrows to display the direction of the destination during off-route.
	Rotary Guidance	Guidance that renders the entry and exit into a rotary as a single branching point.
	Right or Left Turn Guidance	Voice guidance to instruct the direction of travel to be taken.
	Freeway Direction of Travel Guidance	Voice guidance to instruct the direction of travel to take on the Freeway.
	Distance Display Destination	Displays the distance from the present location to the destination.
	Freeway Branch Type Specimen Guidance	Type specimen for guidance to a Freeway branch.
	Intersection Zoom-in Display	Zoom-in display when approaching an intersection.
	Turn List Display	Displays a turn list on the right side of the two-screen display.
	Calendar	Anniversary or appointment dates can be input and displayed.
	Function Help	Explains the functions of the switches on the main screens, such as the destination and menu.

3. Diagnosis Screen Display

The navigation system is equipped with a self-diagnosis function and can display the diagnosis menus shown on the right.
The diagnosis menu contains the following four items

a) Service Check Menu
b) Display Check
c) Navigation Check
d) Bluetooth TEL Check

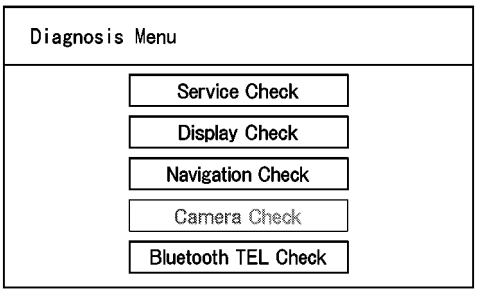

025BE72TE

For details on the procedure required to enter the diagnosis menu screen, see the 2007 Camry Repair Manual (Pub No. RM0250U).

BLUETOOTH HANDS-FREE SYSTEM

▪ DESCRIPTION

Bluetooth is a short-distance, high-speed wireless data communication system that uses the 2.4 GHz frequency band prescribed by the Bluetooth SIG (Special Interest Group).

This system enables drivers to place or receive phone calls using a cellular phone without releasing their hands from the steering wheel.

The Bluetooth hands-free system is installed on both the ’07 Camry with the navigation with AV system and the ’07 Camry without the navigation with AV system as optional equipment*.

The Bluetooth hands-free system of the ’07 Camry with the navigation with AV system can be operated by touching icons indicated on the radio and player with display.

The Bluetooth hands-free system of the ’07 Camry without the navigation with AV system can be operated by turning or pressing the control knob of the audio head unit.

The major difference between the model with the navigation with AV system and the model without navigation with AV system is described in the following table:

*: Standard only on XLE grade models without the navigation with AV system.

▶ Major Difference ●

Function		With Navigation with AV System (Maximum number of data entry)	Without Navigation with AV System (Maximum number of data entry)
Call with Bluetooth phone	By dial		—
	By dialed numbers	(5)	(5)
	By received calls	(5)	(5)
	By phone book	(1,000)	(20)
	By voice recognition		
	By speed dial		
	By POI (Point of Interest) call		—
Registering phonebook		(1,000)	(20)
Registering voice recognition		(20)	(20)
Registering speed dial		(17)	(6)
Registering speed tone		(6)	—
Registering group		(20)	—
Automatic volume setting			

▶ System Diagram ●

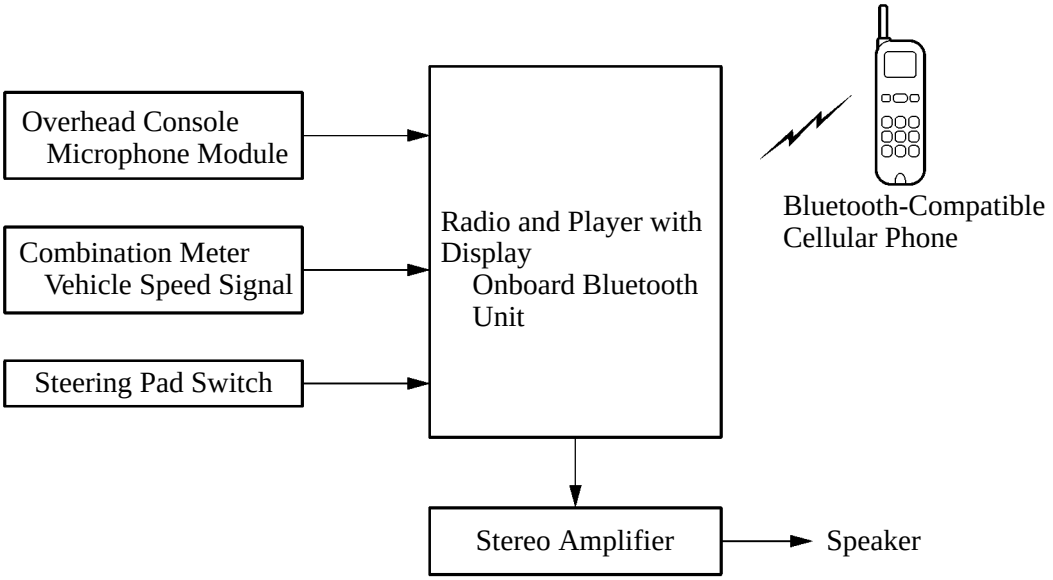

Models with Navigation with AV System

025BE73TE

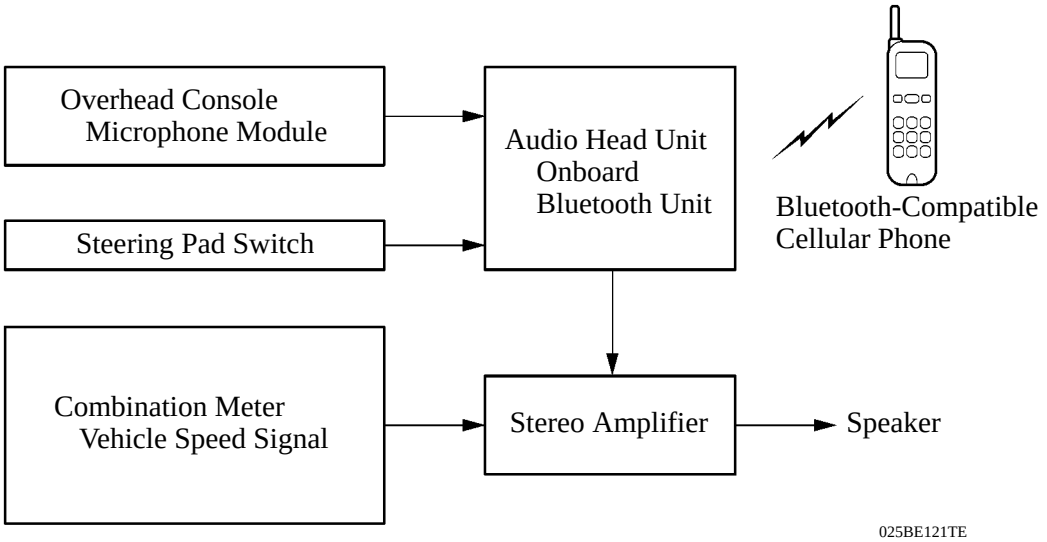

025BE121TE

Models Without Navigation with AV System

▪ LAYOUT OF MAIN COMPONENTS

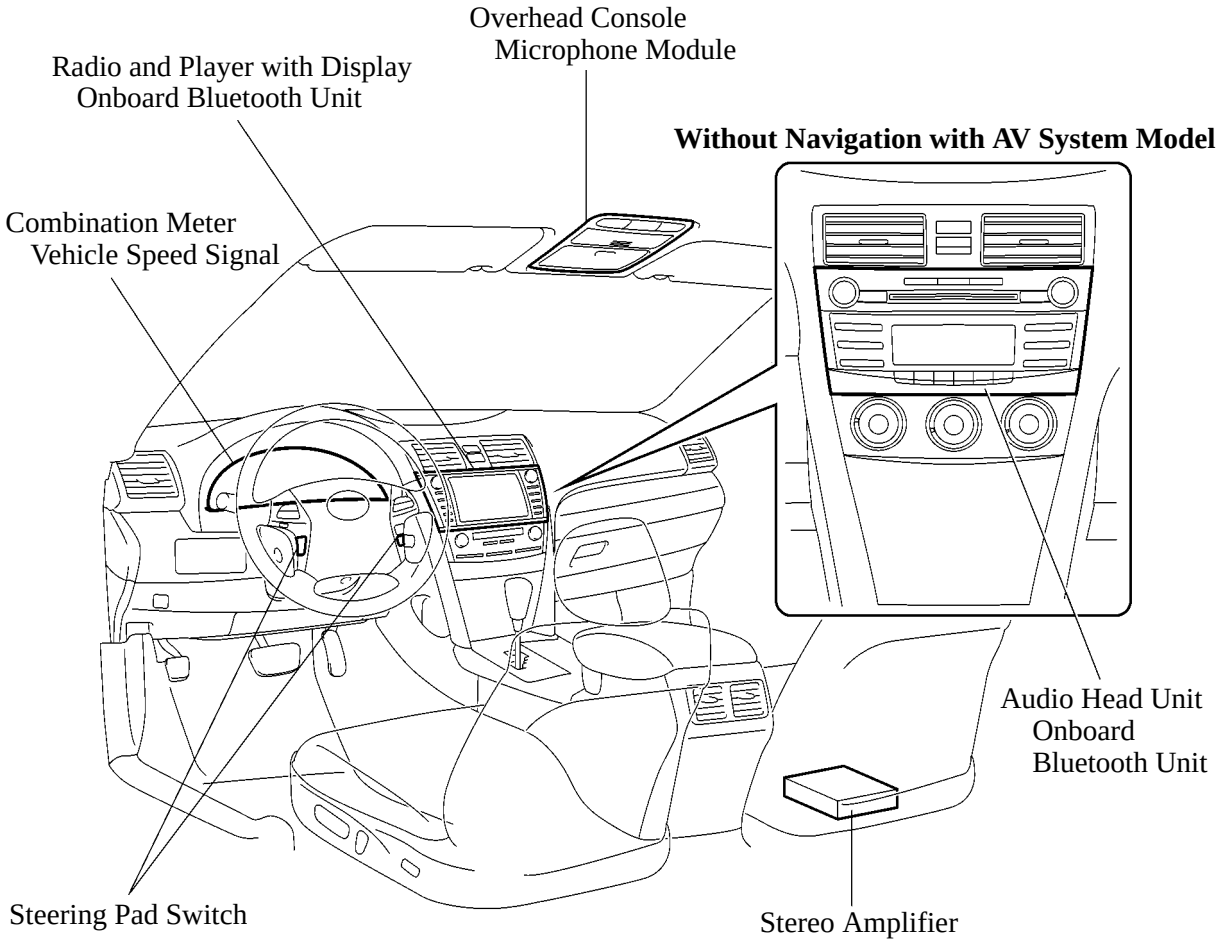

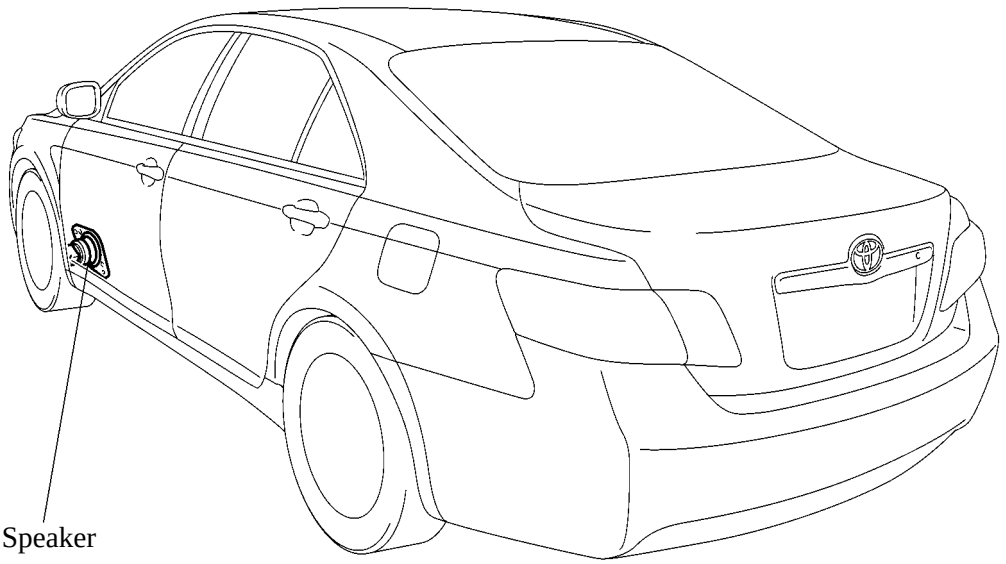

025BE74TE

▪ HANDS-FREE FUNCTIONS (Models with Navigation with AV System)

The Bluetooth hands-free system installed on the models with navigation with AV system has the following functions. However, for safety, some functions may not be selectable when the vehicle is being driven.

Function		Outline
Call with Bluetooth phone	By dial	The user can call by inputting a telephone number.
	By phonebook	The user can call by using the phonebook data that have been transferred from the user's cellular phone. The user can register up to 1000 numbers in the phonebook.
	By dialed numbers	The user can call by selecting a previously dialed number. The system remembers up to five dialed numbers. If more than five numbers have been dialed, the oldest number will no longer be remembered.
	By received calls	The user can call by selecting the telephone number of a received call. When a call is received, the system will remember the last five numbers. If more than five calls have been received, the oldest number will no longer be remembered.
	By speed dial*	The user can call by using registered telephone numbers that the user selected from the phonebook, dialed numbers or received calls.
	By voice recognition (Dialing by name)	The user can call by giving a name registered in the phonebook.
	By voice recognition (Dialing by phone number)	The user can call by giving a desired number.
	By POI (Point of Interest) call	The user can call by operating a switch when "Call" is displayed on the screen from navigation system.
Receive with Bluetooth phone		When a call is received, the receive screen is displayed with a sound.
Talk on the Bluetooth phone		While user is talking on the phone, the talking screen is displayed.
Change the settings of the Bluetooth phone	Registering the speed dial	The user can register the desired telephone number from the phonebook, dialed numbers or received calls. Up to 17 speed dial numbers can be registered.
	Setting the volume	The user can set the volume.
		Automatic volume settings for high speed: When the vehicle speed is over 80 km/h (50 mph), the volume automatically increases by 3 dB from the volume set by the user. When the vehicle speed decreases to 70 km/h (44 mph) or lower, the volume returns to the previous volume setting.
		Initializing the settings: The user can initialize the settings.
	Setting the screen	Receiving call display: The user can select the method of the receiving call display.
		Auto answer: When a call is received, the display automatically changes to the talking screen and user can start to talk on the phone (without touching any switch) after a preset time.
		The Bluetooth connection status at startup: When the user turns the power source to ACC or IG-ON and the Bluetooth is automatically connected, the connection check is displayed.
		Initializing the settings: The user can initialize the settings.

*: The user can operate it while driving.

(Continued)

Function		Outline
Change the setting of the Bluetooth phone	Setting the phonebook	Registering phone number: The user can register phone numbers in the phonebook.
		Transferring a telephone number: The user can transfer the telephone numbers from the user's Bluetooth phone to the system. Up to 1,000 data (up to 2 numbers per entry) can be registered in the phonebook.
		Registering the phonebook data: The user can register the phonebook data.
		Editing the name: If no name has been inputted, the number is displayed.
		Editing the phone number: The user can register a phone number in "TEL1" and "TEL2" separately. Up to 2 numbers per phonebook entry can be registered.
		Selecting the group: The user can set a group for a contact. It will then be easier for the user to find this contact when needed, by using the grouping display.
		Setting the voice recognition: The user can set the voice recognition. Up to 20 numbers can be registered to allow voice recognition.
		Adding data to the phonebook: The user can add data to the phonebook.
		Editing the data: The user can edit the registered data.
		Deleting the data: The user can delete the data.
		Deleting all the phone data: The user can delete all the phone data.
		Registering a group name: The user can register 20 groups
		Selecting a group icon: The user can select the desired icon.
		Editing a group name: The user can input the name with the software keyboard.
		Deleting a group name: The user can delete the group names individually or all at once.
		Deleting the log data: The user can delete the log data individually or all at once.
Change the settings of the Bluetooth phone	Setting the security	By setting the security, the user can prevent people from using some functions of the hands-free system. It is useful when the user leave their car with a hotel or valet parking or the user doesn't want others to see the data that the user has registered.
		Changing the security code: The security code is 4 digits and the default is "0000". Choose a new code that is hard for other people to guess.
		Phone book lock: The user sets the phonebook lock.
		Initializing the security code: The user can initialize the settings.

(Continued)

Function		Outline
Set a Bluetooth phone	Enter the Bluetooth phone	In order to use hands-free function of a Bluetooth phone, it is necessary to register it in the audio head unit. Once a phone is registered, the hands-free function becomes available automatically. The user can register up to 6 Bluetooth phones.
	Select the Bluetooth phone	When two or more registered Bluetooth phones are in the cabin, it is necessary to select which phone to use to prevent the lines from being crossed. Only the selected phone is available for use as a hands-free phone. The phone registered last is automatically selected.
	Indicate and change Bluetooth information	The user can set, change and initialize the information of the Bluetooth phone displayed on the screen.
	Deleting a Bluetooth phone	A registered Bluetooth phone can be unregistered from the multi display.
	Displaying the information of the Bluetooth phone user delete	The user can display the information of the Bluetooth phone before he/she deletes it and he/she can ensure that the telephone that he/she will delete is correct one.

▪ HANDS-FREE FUNCTIONS (Models without Navigation with AV System)

The Bluetooth hands-free system installed on the models without navigation with AV system has the following functions. However, for safety, some functions may not be selectable when the vehicle is being driven.

Function		Outline
Call with Bluetooth phone	By phonebook	The user can call by using the phonebook data that have been transferred from the user's cellular phone.
	By dialed numbers	The user can call by selecting a previously dialed number (voice recognition is also available). The system remembers up to 5 dialed numbers. If more than 5 numbers have been dialed, the oldest number will no longer be remembered.
	By received calls	The user can call by selecting the telephone number of a received call (voice recognition is also available). When a call is received, the system will remember the last five numbers. If more than five calls have been received, the oldest number will no longer be remembered.
	By speed dial*	The user can call using the registered phone number by pressing the function buttons (1 to 6) of the audio head unit.
	By voice recognition (Dialing by name)	The user can call by giving a name registered in the phonebook.
	By voice recognition (Dialing by phone number)	The user can call by giving a desired number.
Receive with Bluetooth phone		When a call is received, the phone number or registered caller name is displayed on the audio head unit LCD with an audio signal.
Talk on the Bluetooth phone		While the user is talking on the phone, the phone number or registered caller name is displayed on the audio head unit LCD.
Change the settings of the Bluetooth phone	Setting the phonebook	Transferring a telephone number: The user can transfer the telephone numbers from the user's Bluetooth phone to the system.
		Registering phone number: The user can register phone numbers using the following methods - Voice recognition - Using dialed numbers and received calls - Inputting phone numbers using the control knob of the audio head unit Up to 20 data can be registered in the phonebook.
		Add entry: The user can register voice recognition data for a maximum 20 registered phone numbers. The user can initialize the settings.
		Change Name: The user can change the registered voice recognition data.
		Delete entry: The user can delete the registered their voice recognition data.
		Delete speed dial: The user can delete the speed dials registered to the function buttons (1 to 6) of the audio head unit.
		List Names: The user can change or delete the voice recognition data, or can call using certain voice recognition data by selecting that data while the system is reading it out.

*: The user can operate it while driving.

(Continued)

Function		Outline
Change the settings of the Bluetooth phone	Registering the speed dial	The user can register a maximum of 6 speed dials to the function buttons (1 to 6) of the audio head unit by selecting the desired phone numbers from the voice recognition registration. The user can initialize the settings.
	Setting the volume	The user can set the volume.
		Automatic volume settings for high speed: When the vehicle speed is over 80 km/h (50 mph), the volume automatically increases by 3 dB from the volume set by the user. When the vehicle speed decreases to 70 km/h (44 mph) or lower, the volume returns to the previous volume setting. The user can initialize the settings.
	Setting the security	By setting the security, the user can prevent people from using some functions of the Hands-free system. It is useful when the user leaves their car with a hotel or valet parking or the user doesn't want others to see the data that the user has registered.
		Changing the security code: The security code is 4 digits. Choose a new code that is hard for other people to guess.
		Phone book lock: The user sets the phonebook lock.
		Initializing the security code: The user can initialize the settings.
Set a Bluetooth phone	Enter the Bluetooth phone	In order to use hands-free function of a Bluetooth phone, it is necessary to register it in the audio head unit. Once a phone is registered, the hands-free function becomes available automatically. The user can register up to 6 Bluetooth phones from a maximum of 6 numbers.
	Select the Bluetooth phone	When two or more registered Bluetooth phones are in the cabin, it is necessary to select which phone to use to prevent the lines from being crossed. Only selected phone is available for use as a hands-free phone. The phone registered last is automatically selected.
	Indicate Bluetooth information	The user can check the information of the Bluetooth phone on the audio head unit LCD.
	Change the passkey	The user can change the pass key on the audio head unit LCD.
	Deleting a Bluetooth phone	The user can delete the registered Bluetooth phone.

POWER WINDOW SYSTEM

▪ DESCRIPTION

A power window motor with built-in ECU is provided on the driver side door of XLE grade models. The ECU effects power window control.

The power window system has the following functions:

Function	Outline	Grade	
		XLE	LE SE
Manual up-and-down (All Doors)	This function causes the driver door window to open or close while the power window switch is being pulled halfway up or pushed halfway down. Windows other than the driver door window can be opened or closed by fully pulling up or fully pushing down the switch. The window stops as soon as the switch is released.		
One-touch auto up-and-down (Driver Door)	The one-touch auto up-and-down function enables the window to be fully opened or closed with a single touch of the power window switch.		—
One-touch auto down (Driver Door)	The one-touch auto down function enables the window to be fully opened with a single touch of the power window switch.	—	
Jam Protection (Driver Door)	A jam protection function automatically stops the power window and moves it downward if a foreign object gets jammed in the window during one-touch auto-up operation.		—
Remote Control (All Doors)	The power window master switch can control the up-and-down operations of the windows.		
Window Lock	Power window operation of the 3 passenger windows is disabled when the window lock switch is pressed.		
Key Off Operation (Driver Door)	This function makes it possible to operate the power windows for approximately 43 seconds after the power source is turned to OFF, if the driver's door is not opened.		
Diagnosis	When the power window ECU detects the following conditions, the self-diagnosis function switches the ECU to failsafe mode. The power window switch illumination (LED) flashes to inform the user. An abnormality in the Hall IC that detects the position, speed and direction of the window. An error in the window detection position and the upper limit position recorded in the power window ECU.		—
Fail-Safe	If the Hall IC in the power window ECU malfunctions, some power window functions will be prohibited by the failsafe mode: Power windows can be operated using the power window switches within 40 seconds of failsafe mode being entered. Each power window operates when the corresponding power window switch is fully pushed down or pulled up and held in that position.		—

Service Tip

The power window motor assembly stores the initial position of each door window. The memory is not cleared if battery terminals, fuses or power window motor connectors are disconnected. However, after the power window motor assembly and power window regulator assembly are replaced, the stored initial position data must be cleared and the initialization of the power window motor assembly must be performed. When necessary, perform the initialization as follows:

Initial Position Memory Erasure Procedure

Turn the power supply off (for example, remove a power window motor connector or fuse) while the power window motor is operating.

Check that the power window switch illumination blinks after the power source is turned on.

Initialization procedure

Pull up the power window switch to the AUTO UP position and hold it until the window is fully closed.

Hold the power window switch in the AUTO UP position for at least 1 second after the window is fully closed.

Make sure that the window opens and closes automatically using the one touch function.

For details, see the 2007 Camry Repair Manual (RM0250U).

▶ System Diagram ●

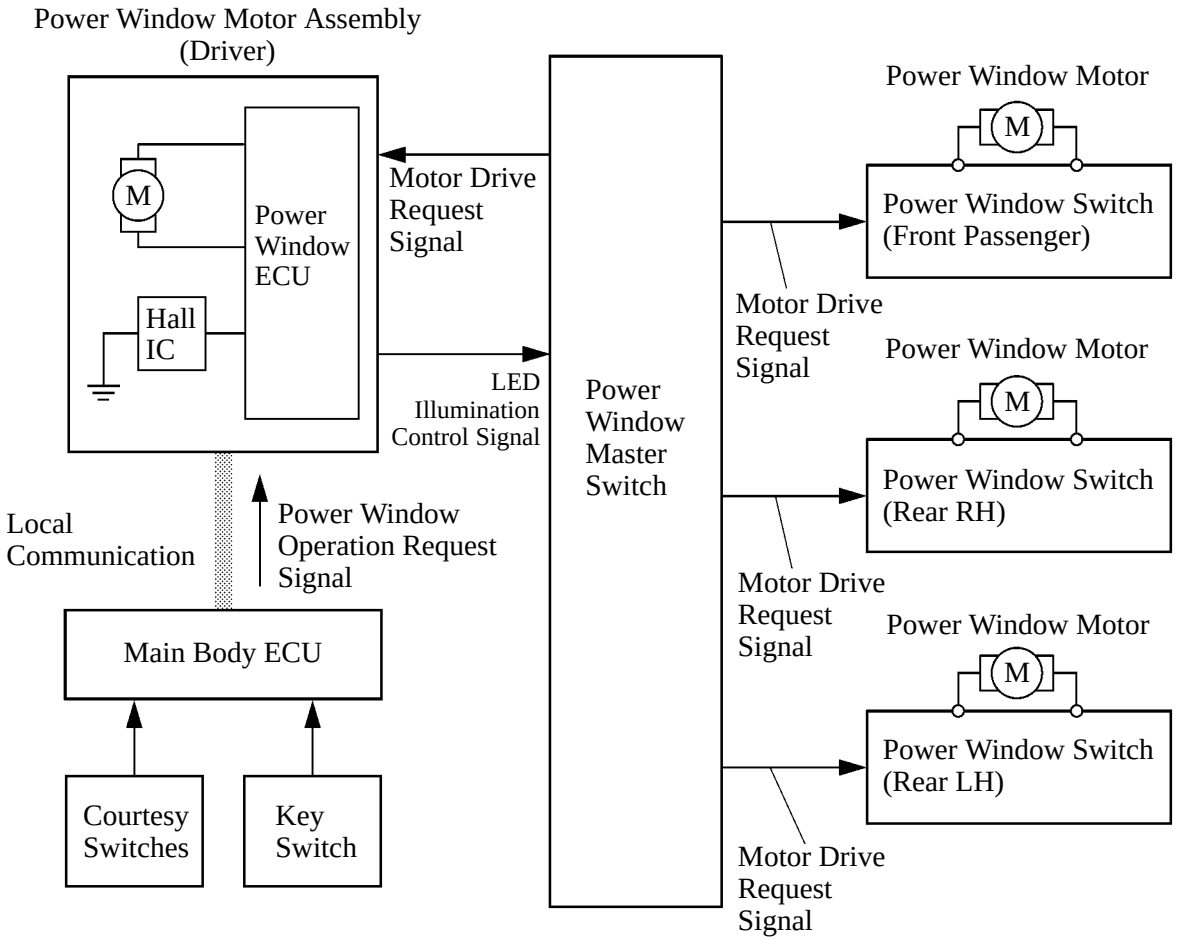

XLE Grade

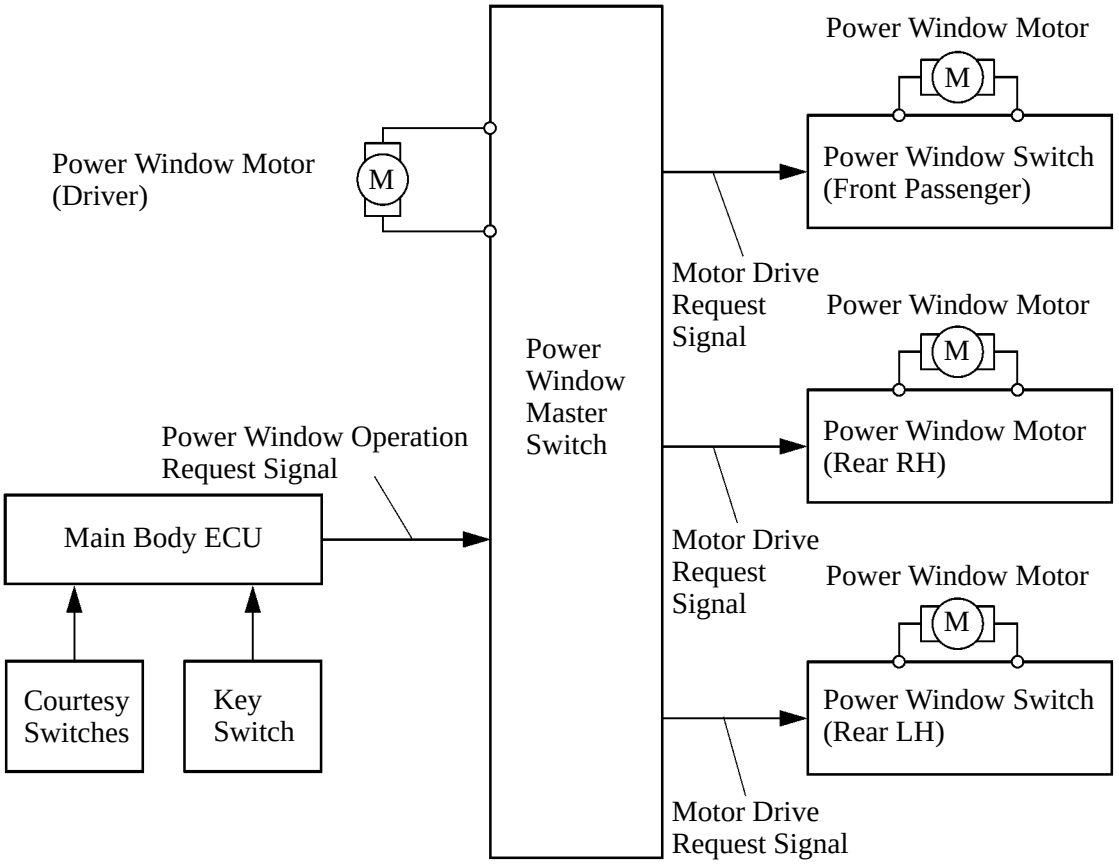

LE and SE Grade

025BE124P

▪ LAYOUT OF MAIN COMPONENTS

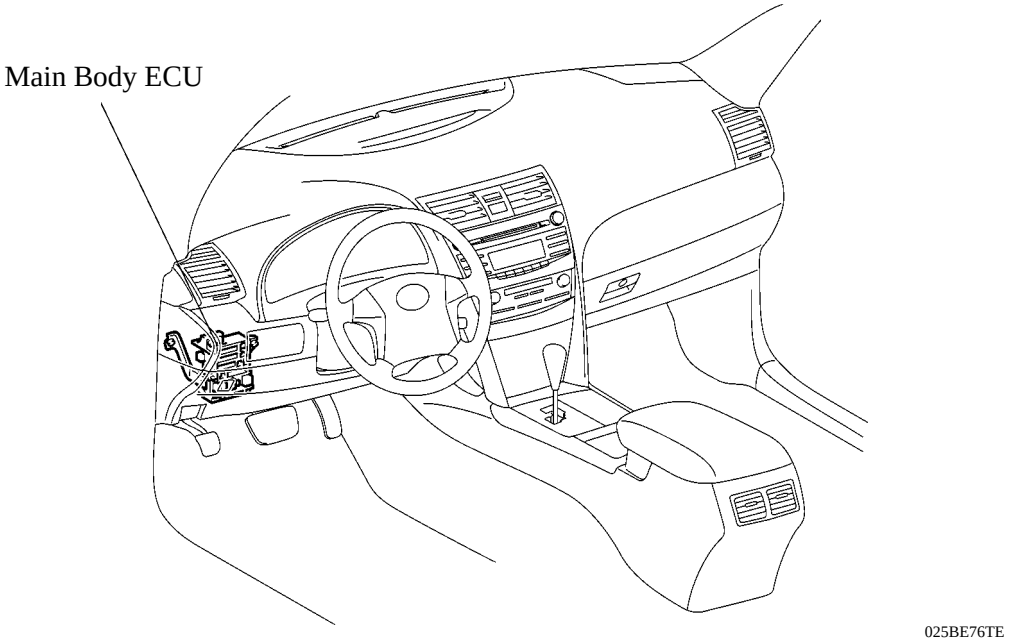

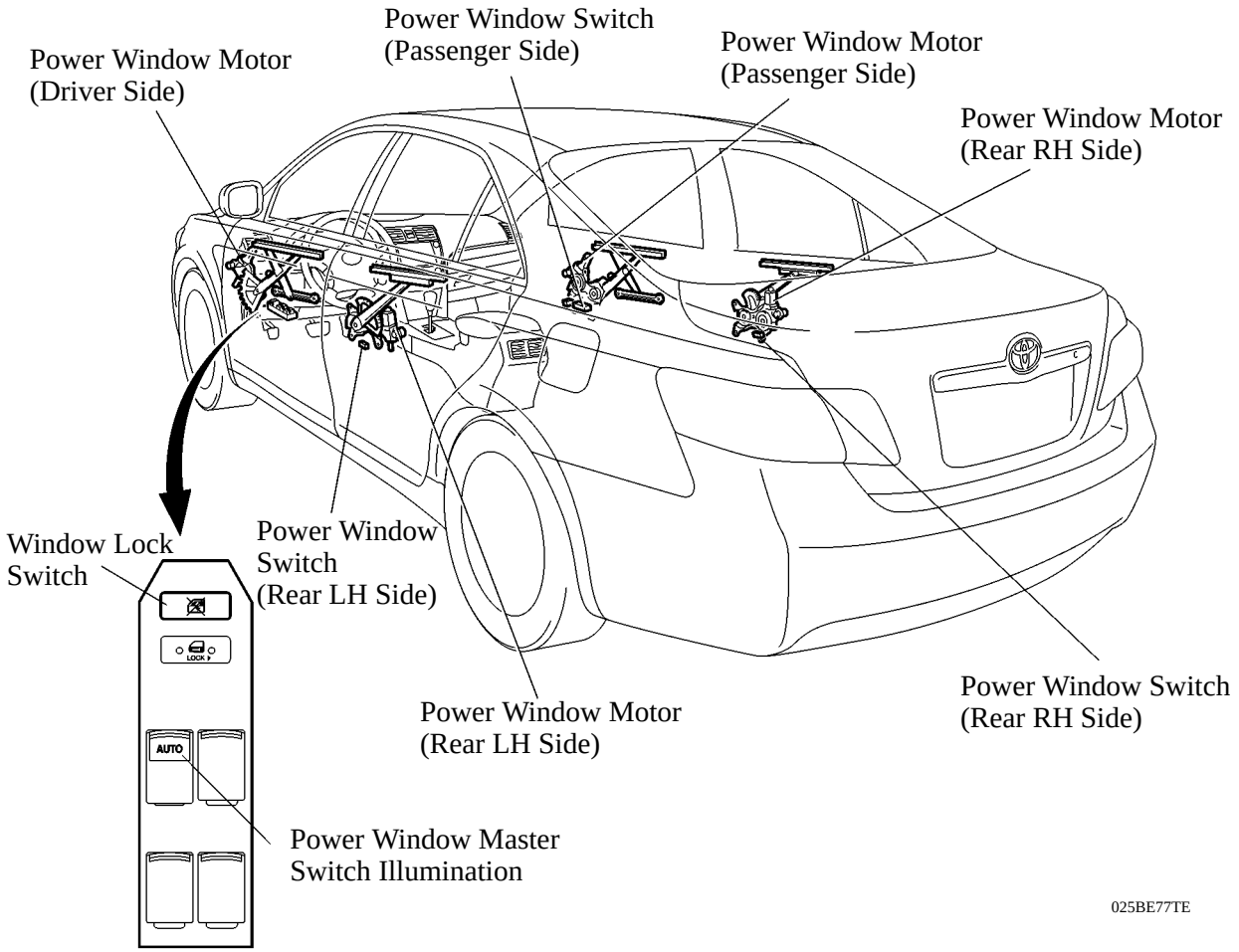

Power Window Master Switch

XLE Grade

▪ JAM PROTECTION FUNCTION

A jam protection function automatically stops the power window and moves it downward if a foreign object gets jammed in the door window during one-touch auto up operation.

The operation of the jam protection function is described below.

Door window distance from fully closed position	Operation
200 mm (7.87 in.) or more	Down operation of 50 mm (1.97 in.) or one second.
200 mm (7.87 in.) or less	Down operation until door window operation of 200 mm (7.87 in.) is reached or five seconds.

The worm gear and Hall IC in the power window motor assembly are used to enable the power window jam protection.

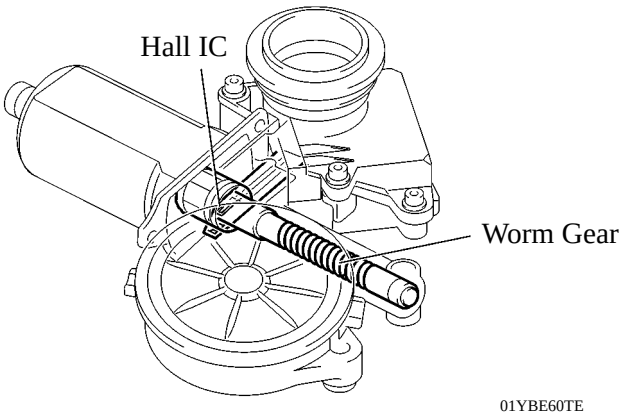

The Hall IC converts the changes in the magnetic flux that occur through the rotation of the worm gear into pulse signals and outputs them to the power window ECU.

To control the jam protection function, the ECU determines the amount of movement and jamming of the window glass based on the pulse signals from the Hall IC.

▶ Judgment of Movement and Jamming ●

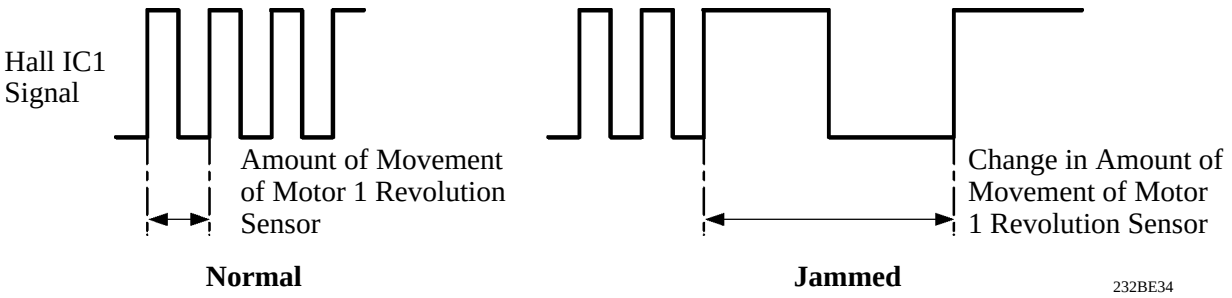

DOOR LOCK CONTROL SYSTEM

▪ DESCRIPTION

The door lock control system has the following functions:

Function	Outline
Manual unlock prohibition function	Performing the door lock operation with a transmitter (wireless remote) or a key will prohibit the unlock operation by the door lock control switch (door mounted interior lock switch).
One-motion open	When the door is locked, this function enables the door to be unlocked by merely pulling the inside handle lever of the door.
Key-linked lock and unlock function	This function, which is linked with the door key cylinder, can lock or unlock all the doors when a lock or unlock operation is effected using the mechanical key.
Key confine prevention function	When the key is in the interior detection area (for models with smart key system) or the key is inserted into the ignition key cylinder (for models without smart key system), if the door lock operation is performed with the driver's door open, all the doors will be unlocked.
2-step unlock function*1	This function is provided to unlock the driver's door when the key is turned in the door lock cylinder the first time, and to unlock the remaining doors when it is turned the second time.
Shift-linked automatic door lock*1,2	When the conditions listed below are met, this function causes all the doors to be automatically locked. The engine is running. All doors are closed. The shift lever is moved to any position other than P.
Speed-sensitive automatic door lock*1	When the conditions listed below are met, this function causes all the doors to be automatically locked. Vehicle speed is higher than approximately 20 km/h (13 mph). All doors are closed. Any one of the doors in an unlocked state.
Shift-linked automatic door unlock*1,2	When the power source*3 is ON, and the shift lever is moved to P position from any position other than P, and the vehicle speed is 16 km/h (10 mph) or less, all of the doors will be automatically unlocked.
Opening driver's door-linked automatic door unlock*1	All doors are unlocked automatically when the driver's door is opened within 10 seconds after the power source*3 is changed from IG-ON to the ACC or OFF.

*1: The setting function can be changed using the customized body electronics system. For details, refer to Customized Body Electronics System section on page BE-13.

*2: Only for automatic transaxle models.

*3: Power source conditions can be changed by pressing the engine switch on models with the smart key system and by operating the ignition switch on models without the smart key system.

▶ **System Diagram ●**

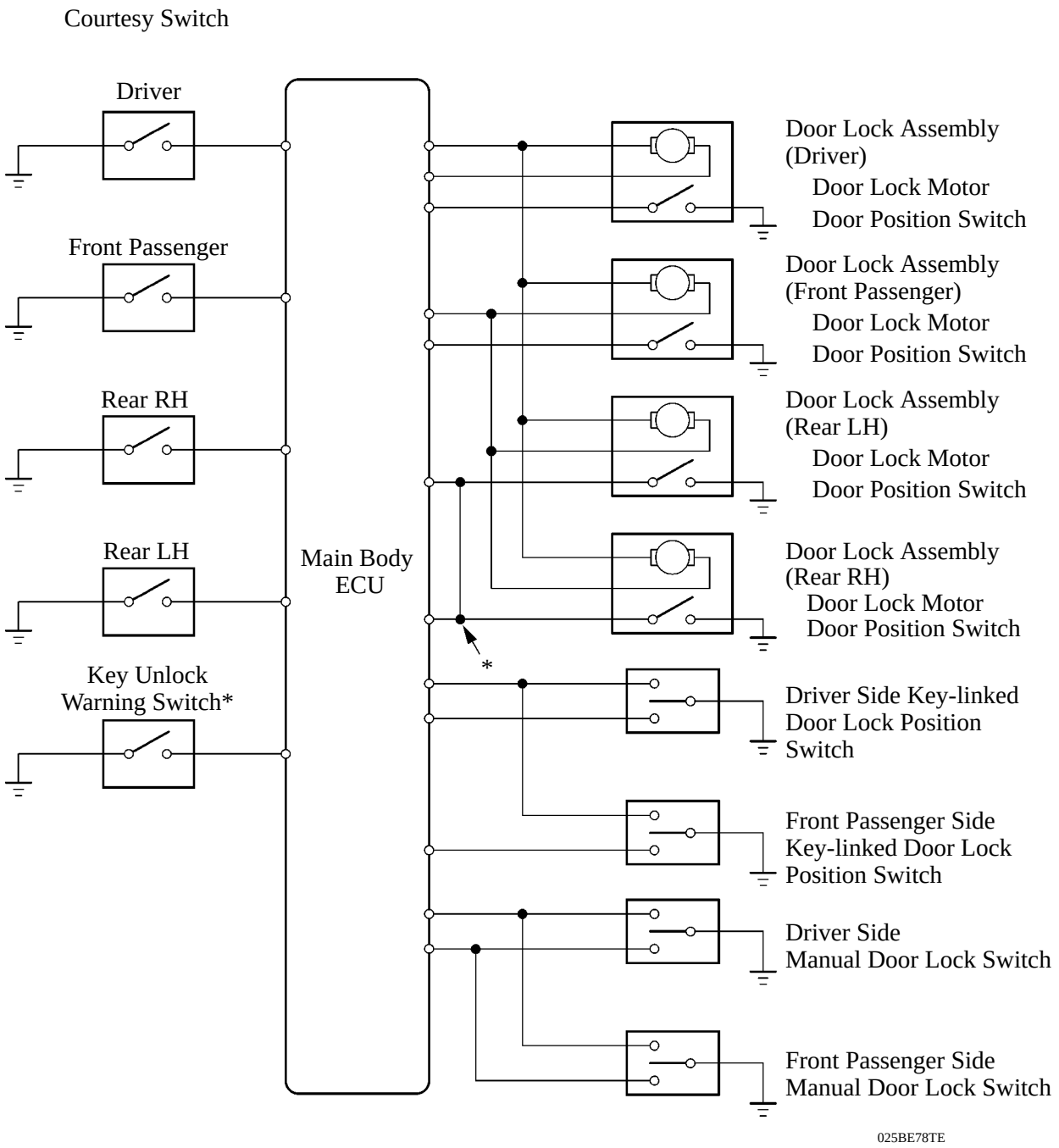

*: Models without smart key system

▪ LAYOUT OF MAIN COMPONENTS

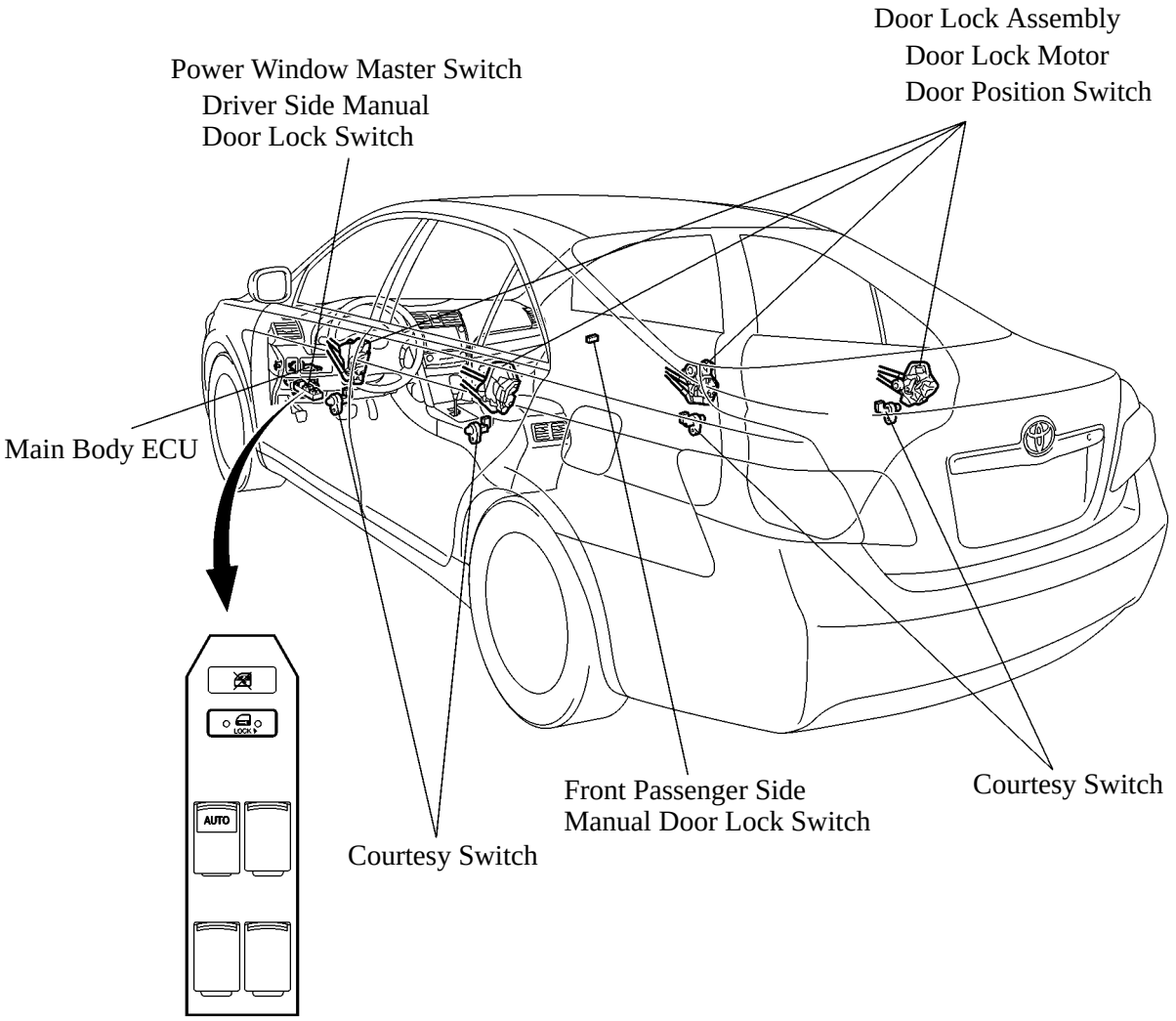

025BE79TE

Power Window Master Switch

WIRELESS DOOR LOCK REMOTE CONTROL SYSTEM

●DESCRIPTION

▶The wireless door lock remote control system is provided as standard equipment.

▶This system is controlled mainly by the main body ECU on models without the smart key system and by the certification ECU on models with the smart key system. For details about this system on models with smart key system, refer to Entry Function Operation in SMART KEY SYSTEM. (see page BE-89).

▶This system is convenient system for locking and unlocking all the doors from a distance. It has the following features:

- The wireless door lock receiver performs the code identification process and sends the lock or unlock signal to the main body ECU. Then the main body ECU effects the door lock control.
- A key-integrated type transmitter is used, and it incorporates the following four buttons: LOCK, UNLOCK, TRUNK and PANIC.

●SYSTEM DIAGRAM

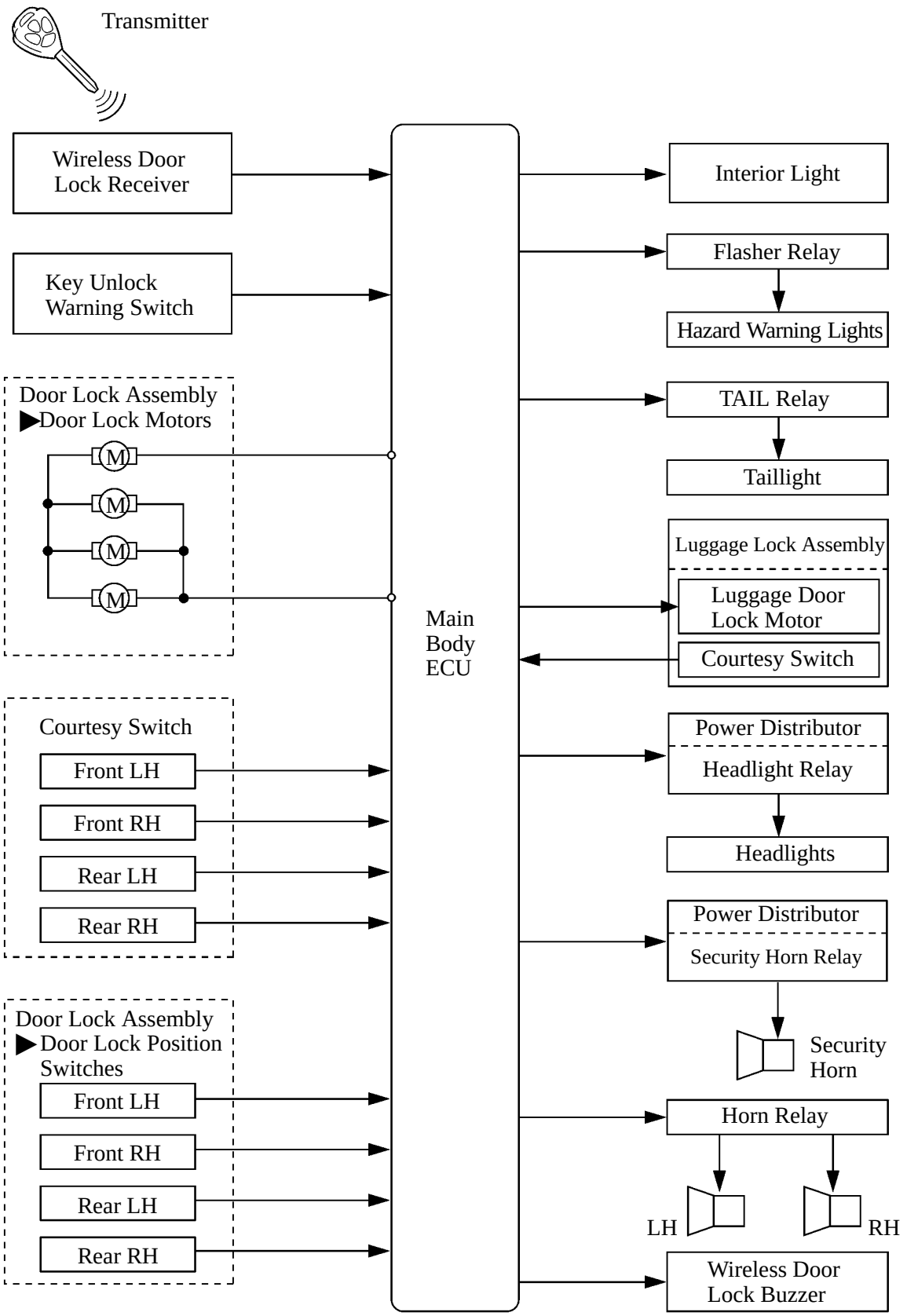

025BE122P

●LAYOUT OF MAIN COMPONENTS

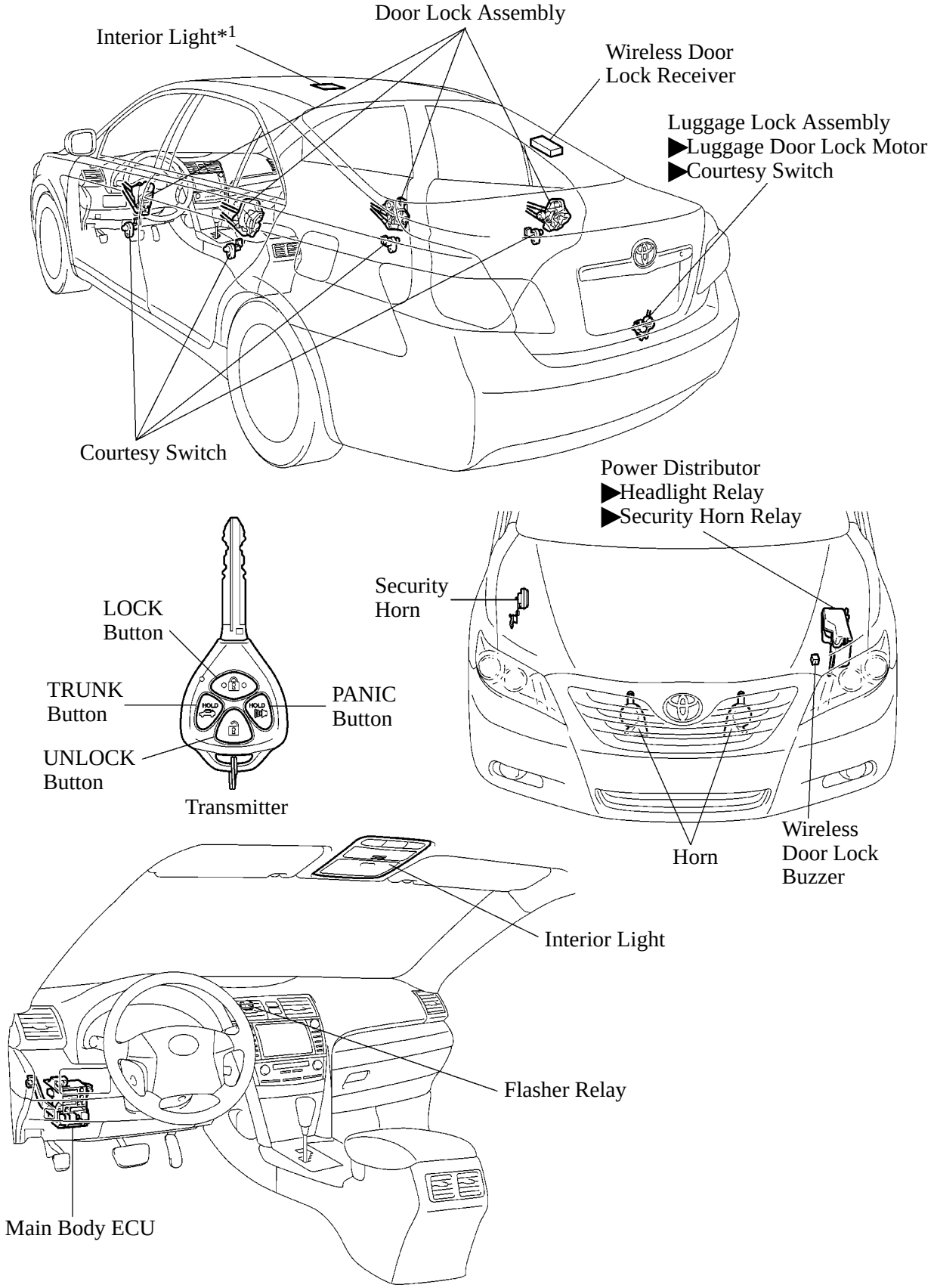

*1: Models without sliding roof system
*2: Models with sliding roof system

025BE119TE

▶FUNCTION

1. General

The wireless door lock remote control system has following functions:

Function	Outline
All Doors Lock	Pressing the LOCK button of the transmitter lock all doors.
All Doors Unlock* (2-step unlock)	Pressing the UNLOCK button of the transmitter once unlocks the driver's door, and pressing it again within 3 seconds unlocks all doors.
Trunk Opener*	Keeping the TRUNK button of the transmitter pressed longer about 0.6 seconds opens the trunk lid.
Answer Back*	▶The hazard light flashes once when locking, and flashes twice when unlocking, to inform that the operation has been completed. ▶The wireless door lock buzzer sounds once when locking, and sounds twice when unlocking, to inform that the operation has been completed.
Panic Alarm	Keeping the PANIC button of the transmitter pressed longer that about 1 seconds causes the following alarms to activate. ▶Sounds the horn and security horn. ▶Flashes the hazard warning lights head lights, and taillights. ▶Illuminates the interior light.
Automatic Lock*	If none of the doors are opened within 60 seconds of being unlocked by the wireless door lock remote control, all the doors will be locked again automatically.
Door Ajar Warning*	If any door is open or ajar, pressing the LOCK button of the transmitter will cause the wireless door lock buzzer to sound for about 10 seconds.
Repeat	If a door is not locked in response to the locking operation of the transmitter, the integration relay will output a lock signal after the unlock operation.
Illuminated Entry*	When all the doors are locked, pressing the UNLOCK button causes the interior lights to illuminate simultaneously with the unlock operation.
Transmitter Recognition Code Registration Function	Enables the registering (writing or storing) of 6 types of transmitter recognition codes in the EEPROM that is contained in the main body ECU.

*: The setting function can be changed using the customized body electronics system. For details, refer to Customized Body Electrical System section on page BE-13.

2. Transmitter Recognition Code Registration Function

The table below shows the 6 special code ID registration function modes through which up to 6 different codes can be registered. The codes are electrically registered (written to and stored) in the EEPROM. For details of the recognition code registration procedure, refer to the 2007 Camry Repair Manual (Pub. No. RM0250U).

Mode	Function
Rewrite Mode	Erases all previously registered codes and registers only the newly received codes. This mode is used whenever a transmitter or the main body ECU is replaced.
Add Mode	Adds a newly received code while preserving any previously registered codes. This mode is used when adding a new transmitter. If the number of codes exceeds 6, the oldest registered code is erased first.
Confirm Mode	Confirms how many codes are currently registered. When adding a new code, this mode is used to check how many codes already exist.
Prohibit Mode	To delete all the registered codes and to prohibit the wireless door lock function. This mode is used when the transmitter is lost.

SMART KEY SYSTEM

●DESCRIPTION

▶This system is optional equipment on the XLE grade (except Mexican package model).

▶The smart key system not only has a wireless door lock remote control function and engine immobilizer function, but by carrying the key the following functions (entry function and push button start function) are also possible without having to use a key or transmitter button. It is an extremely convenient system.

- The engine can be started by simply pressing the engine switch while depressing the brake pedal (Push Button Start Function)
- Door unlock/lock (Entry Unlock/Entry Lock Functions).
- The trunk can be opened (Trunk Open Function).
- Wireless door lock control function.

Entry Unlock/Lock Functions

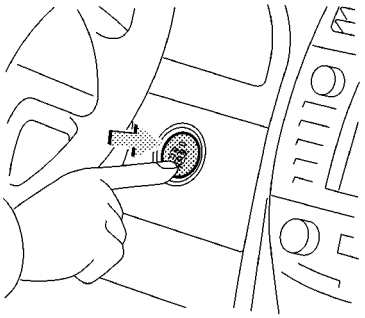

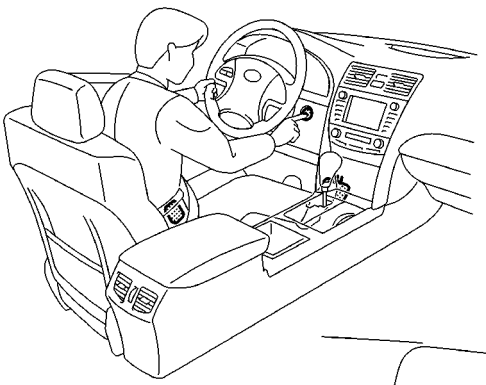

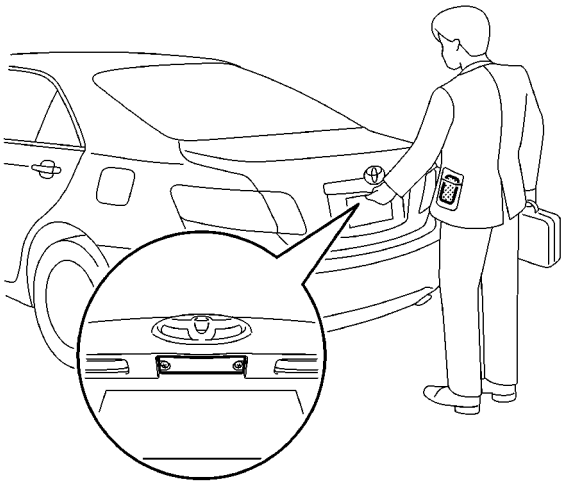

Trunk Open Function

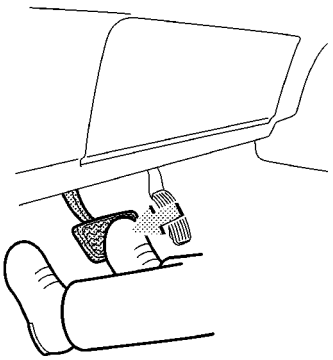

Start Function

025BE80P

●ACTUATION AREA

The special functions of the key system only work when the key is in the actuation area formed by the eight oscillators.

▶The front and rear room oscillators form the actuation area of the push button start function.

▶Front door oscillators and inner and outer trunk oscillators form the actuation area of the entry function.

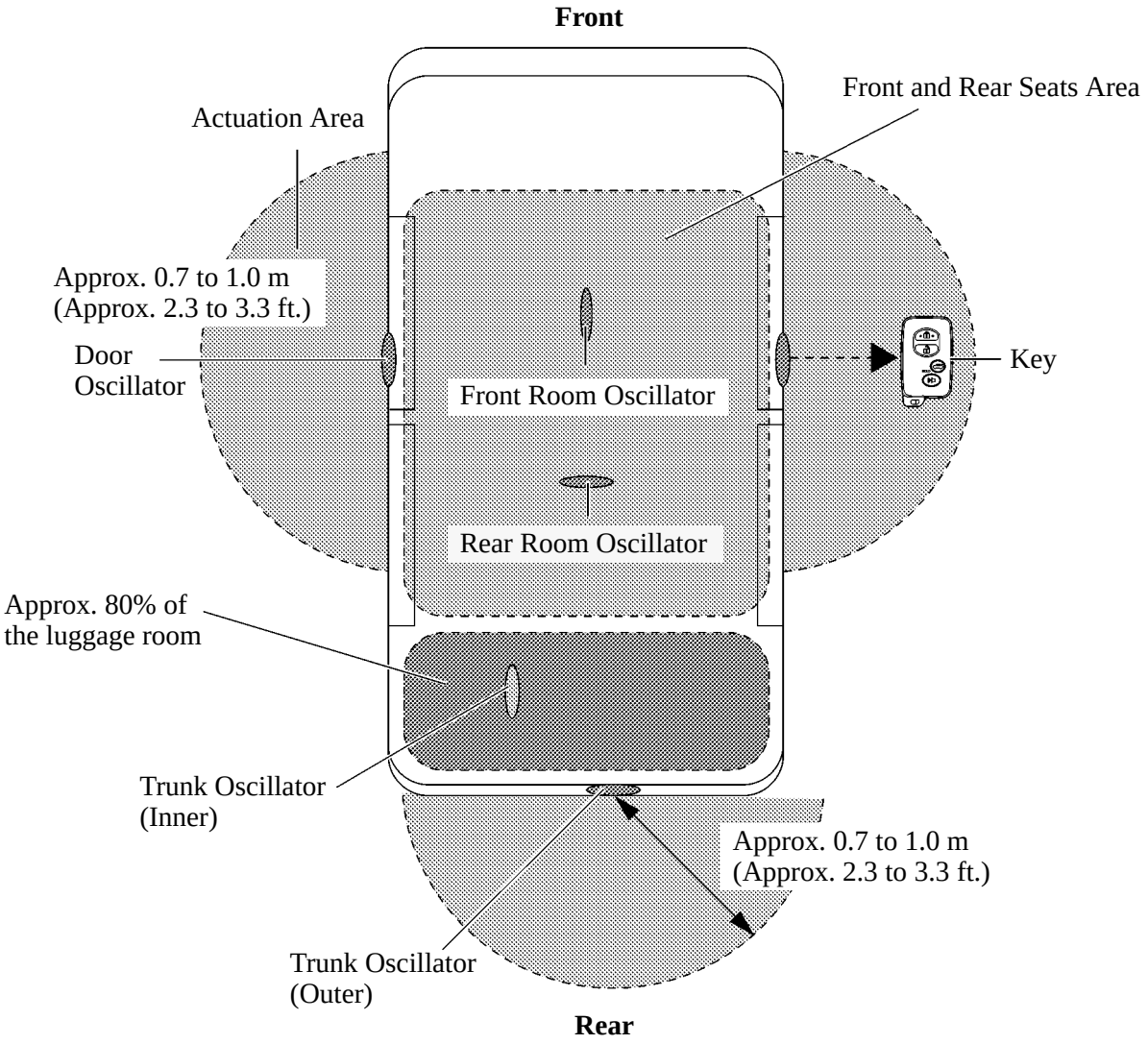

025BE81P

▪ START FUNCTION

1. General

While the ignition key must be inserted into the ignition key cylinder and turned from OFF to the START position in order to start the engine on models without the smart key system, models on which the smart key system is installed start the engine when the push-type engine switch is pressed while the brake pedal is depressed and a key is carried by the driver.

This function has different power source control patterns to suit the state of the brake pedal and shift lever position. For details, see page BE-97.

Along with the adoption of the start function, an engine cranking hold function is used. For details, see page EG-132.

With Smart Key System

Without Smart Key System

285BE61

2. System Diagram

The main body ECU controls the push button start function. The system diagram below shows the components that relate to this function.

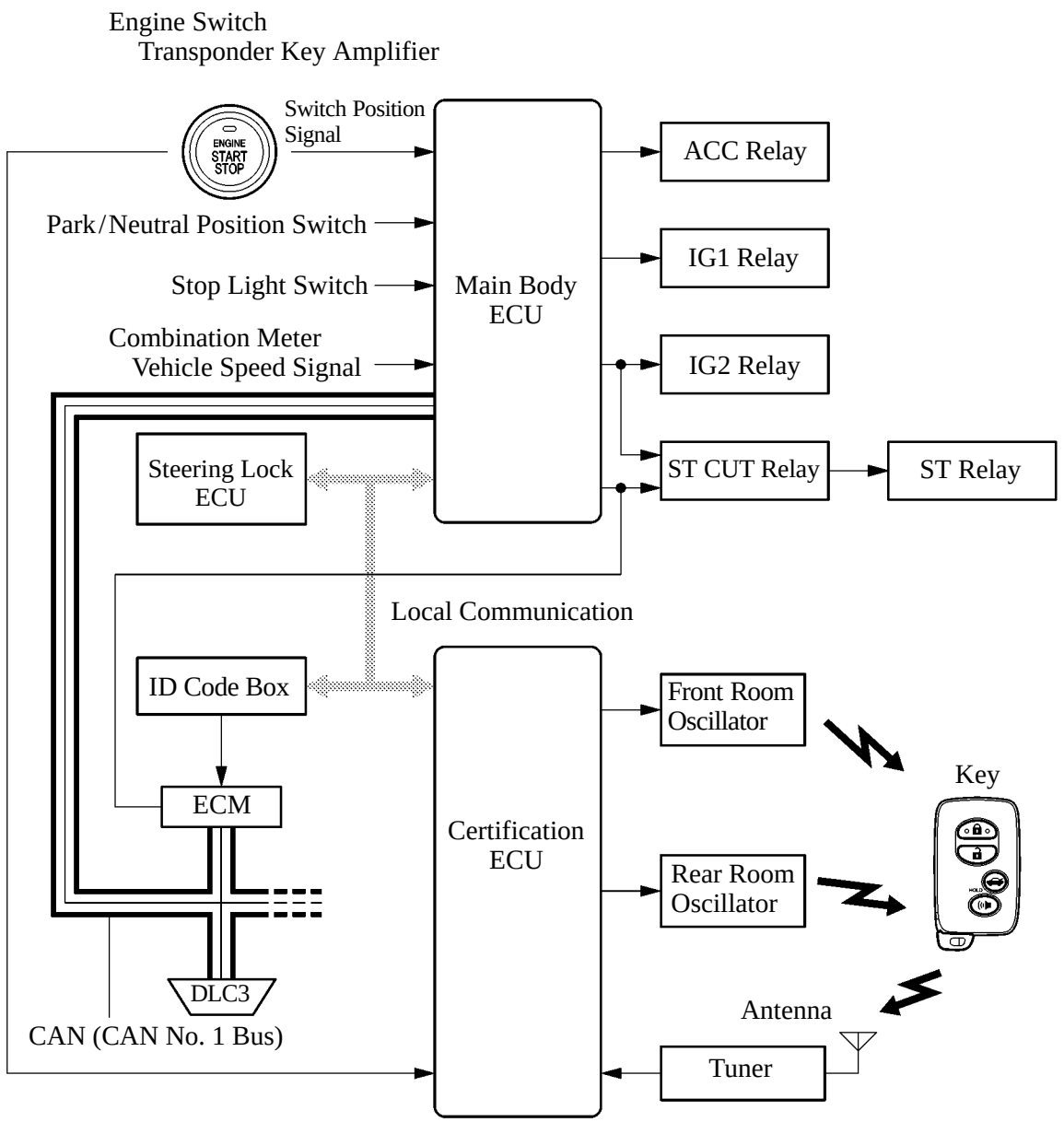

025BE82TE

3. Layout of Main Components

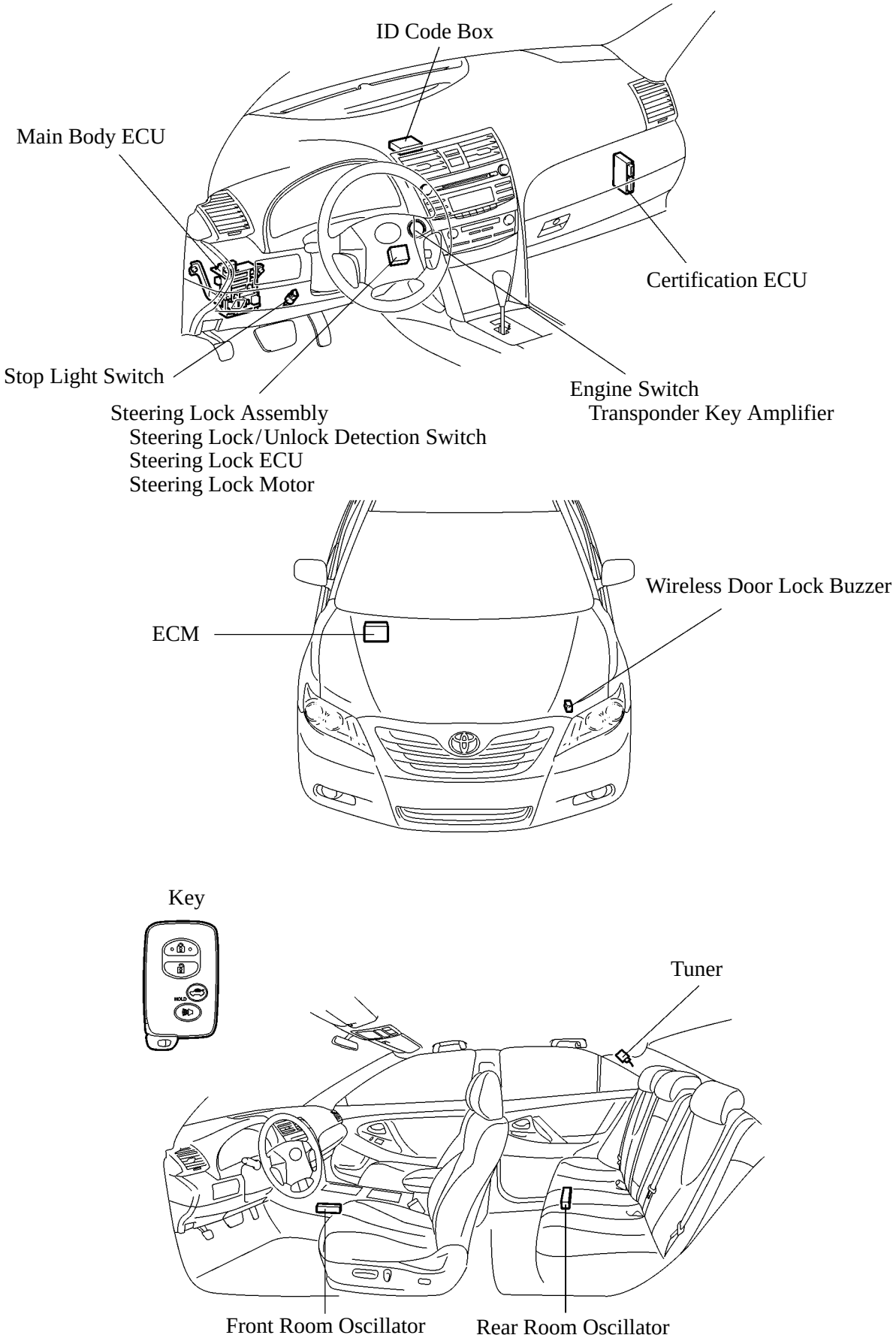

025BE83TE

4. Function of Main Components

Component		Function
Engine Switch Transponder Key Amplifier		Transmits the engine switch signal to the main body ECU. Informs the driver of any power source or system abnormality through the illumination stage of the indicator light. Receives the ID code and transmits it to the certification ECU when the key battery is too weak to respond to the tuner based on the room oscillators.
Key		Receives the signals from the oscillators and returns the ID code to the tuner. For details, see page BE-110.
Room Oscillator Front and Rear		Receives a request signal from the certification ECU and forms the actuation area in the vehicle interior.
Tuner		Receives the ID code from the key and transmits it to certification ECU.
Main Body ECU		Switches the power source among four modes (OFF, ACC, IG-ON, START) in accordance with the shift position and the state of the stop light switch. Controls the smart key system in accordance with the signals received from the switches and each ECU.
Certification ECU		Certifies the ID code received from the tuner and transmits the certification results to the ID code box and steering lock ECU.
Stop Light Switch		Outputs the state of the brake pedal to main body ECU.
ID Code Box		Receives the steering unlock or engine immobilizer disengage/engage signals from the certification ECU, certifies them, and transmits each disengage/engage signal to the steering lock ECU or ECM.
Steering Lock ECU		Receives the steering unlock/lock signal from ID code box, and activates the steering lock motor.
ECM		Receives the engine start request signal from the main body ECU, turns ON the ST relay, and starts the engine. Receives the signal from the ID code box and performs engine ignition and injection.
Combination Meter	Multi-information Display	Informs the driver of malfunctions in the smart key system.
	Master Warning Light	Illuminates simultaneously with a buzzer sound to inform the driver of malfunctions in the smart key system.

5. Construction and Operation

Engine Switch

The engine switch consists of a momentary type switch, two color (Amber, Green) LEDs, and transponder key amplifier.

The amber and green LEDs are for the indicator light.

The driver can determine the present power source and check whether the engine can start or not in accordance with the illumination state of the indicator light.

When the main body ECU detects an abnormality with the smart key system, it makes the amber indicator light flash. If the engine is stopped in this state, it might not be possible to restart it.

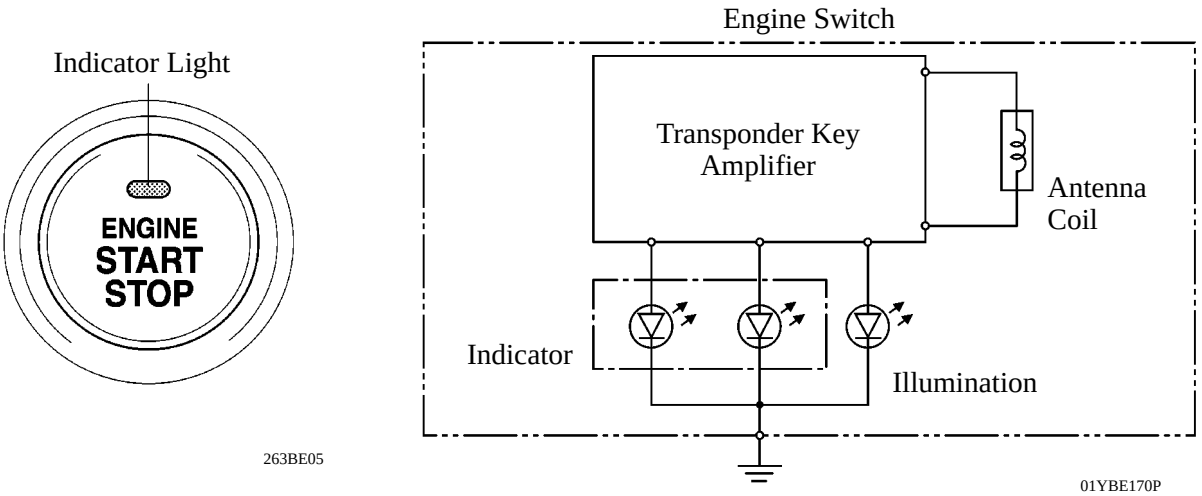

▶ Indicator Light Condition ●

Power Source Condition	Indicator Light Condition	
	Brake pedal not depressed	Brake pedal depressed with shift lever in P or N
OFF	OFF	ON (Green)
ACC, IG-ON	ON (Amber)	ON (Green)
Engine Running	OFF	OFF
Steering lock not unlocked	Flashes (Green) for 15 seconds	Flashes (Green) for 15 seconds
Smart Key System Malfunction	Flashes (Amber) for 15 seconds	Flashes (Amber) for 15 seconds

Main Body ECU

Main body ECU consists of the IG relay No.1 and No.2 actuation circuits, CPU, and hold circuit.

The hold circuit is installed to prevent the power supply to the relays from being cut off when an abnormality occurs in IG Relay No.1 and/or No.2 actuation circuits while driving.

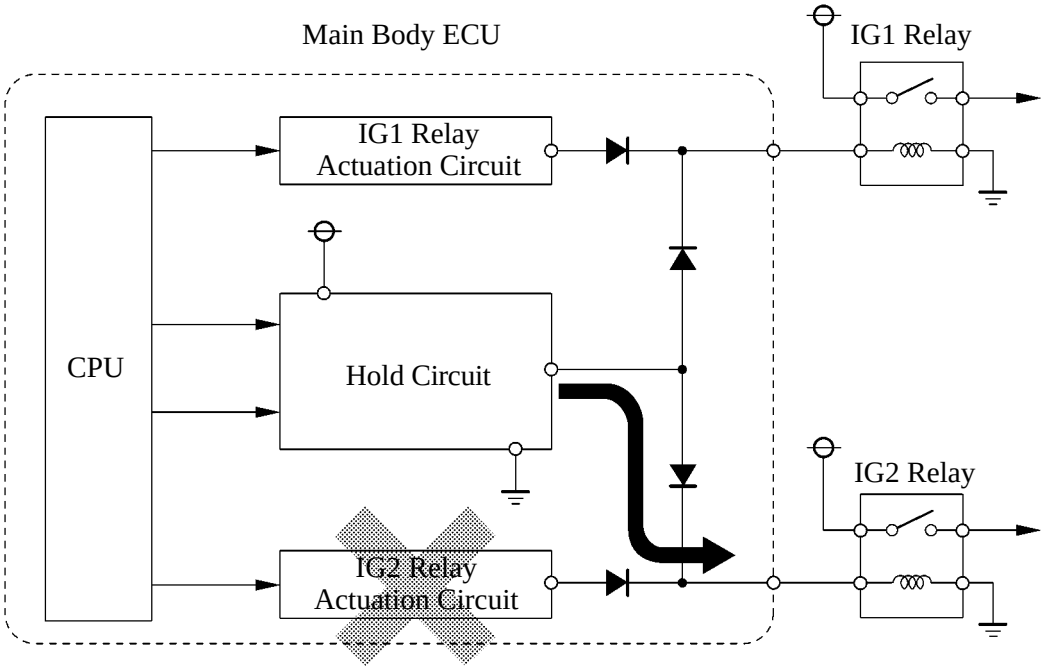

263BE138

Service Tip

The main body ECU constantly stores the present power source state in its memory. Therefore, if the power to main body ECU is interrupted due to the removal of the battery, the main body ECU restores the power source after the battery is reconnected.
For this reason, if the battery is removed when the engine switch is in a state other than OFF, the power will be restored to the vehicle at the same time the power is restored to main body ECU (by reconnecting the battery).
Therefore, before removing the battery, be sure to turn the engine switch OFF.

6. Start Function Operation

General

The start function has different power source patterns to suit the brake pedal state and shift lever position.

Pattern	Brake Pedal	Shift Lever	Power Source Pattern
A	Depressed	P or N Position	When the engine switch is pushed once. OFF △ IG ON (after the engine is started)
B	Not Depressed	P Position	Each time the engine switch is pushed. OFF △ ACC △ IG ON △ OFF
C		Except P Position	Each time the engine switch is pushed. OFF △ ACC △ IG ON △ ACC
D	—	P Position	When the engine switch is pushed in the IG-ON condition.
E	—	Except P Position	When the engine switch is pushed in the IG-ON condition.

▶ Transition of Power Source ●

Shift Position		**P**			**N**		**Except P, N**	
Pattern		B or D	A or D	—	C or E	A or E	C or E	—
Engine Switch		Push	Push	—	Push	Push	Push	Push
Brake		—	Depressed	—	—	Depressed	—	Depressed
Hour		—	—	After 1 hour	—	—	—	—
Power Source	OFF							
	ACC							
	IG							
	Engine Start							

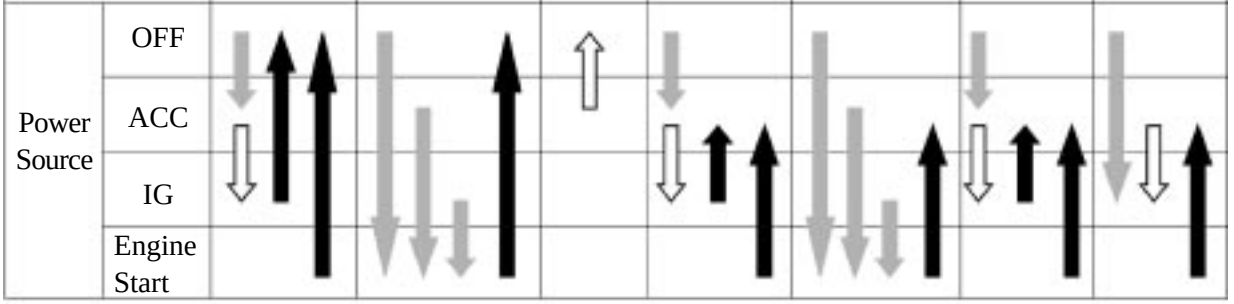

: Transition
: Only when the key certification is OK
: Only when the vehicle is stopped

285BE144

NOTE: Normally, the operation of the engine switch is disabled while the vehicle is being driven. However, in an emergency, by pressing the engine switch for approximately 3 seconds or more, the driver can stop the engine while the vehicle is in motion.

If no signals are transmitted to the main body ECU due to malfunctions in the stop light switch or park/neutral start switch, the engine may not start when the engine switch is pressed with the brake pedal depressed. In such cases, performing the following procedure may be enable the engine to start: 1) press the engine switch to turn the power source from OFF to ACC, and 2) press the engine switch again and hold it for 15 seconds or more.

Above 2 operations must be applied only in emergency situations. Under normal conditions, the engine must not be stopped by pressing the engine switch during driving or started without depressing the brake pedal when the shift lever is in any position other than P or N.

Pattern A: OFF △ IG-ON (after the engine is started)

Step	System Operation
a)	The driver holds the key and enters the vehicle.
b)	When the driver presses the engine switch once with the following conditions satisfied, the main body ECU recognizes the engine switch signal and transmits the key certification request to the certification ECU. Shift position is P or N. Brake pedal depressed. Power source is at OFF.
c)	The certification ECU receives the certification request and transmits a request signal to the front/rear oscillators. These oscillators then transmit the request signal.
d)	The brake pedal is depressed, so the main body ECU turns ON the green indicator light of the engine switch.
e)	The moment the key receives the request signal, it transmits its ID code to the tuner. The signal includes the response code.
f)	The tuner receives this code and transmits it to the certification ECU.
g)	The certification ECU judges and certifies the ID code, and transmits a key certification OK signal to the main body ECU.
h)	After receiving the key certification OK signal, the main body ECU turns ON the ACC relay.

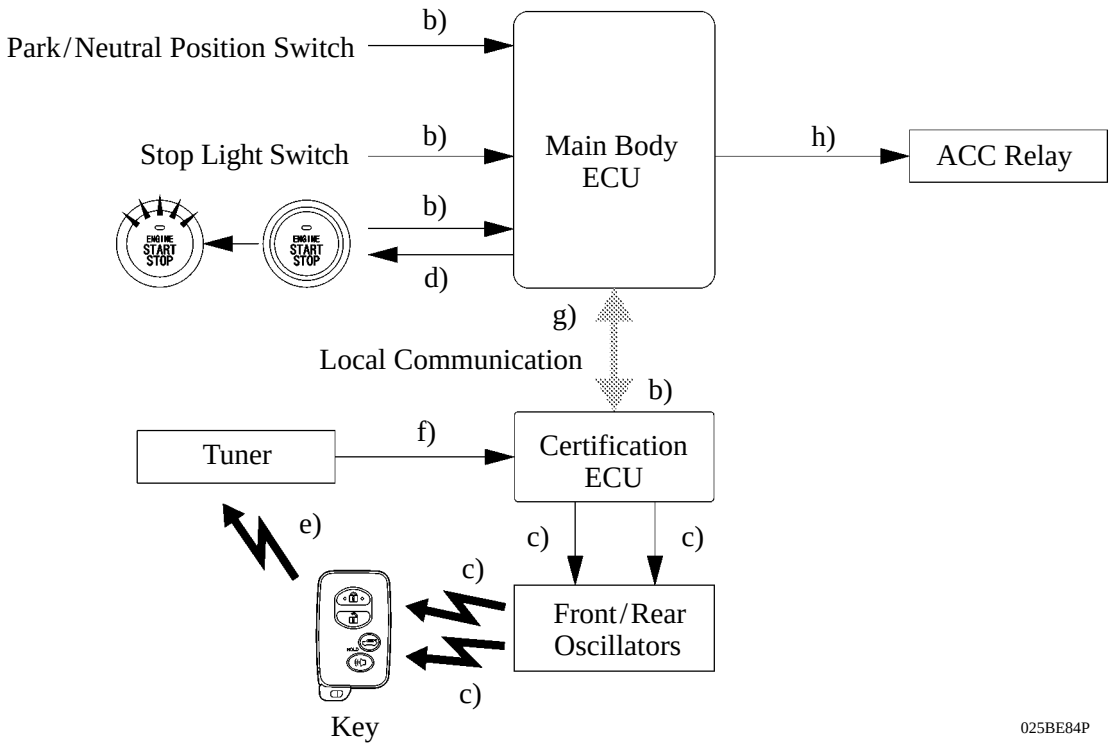

(Continued)

Step	System Operation
i)	The main body ECU turns ON the ACC relay, and then turns ON the IG relays.
j)	The certification ECU checks that the power source has switched from OFF to IG-ON, and transmits a steering unlock signal to the main body ECU and ID code box.
k)	The main body ECU receives this signal and supplies power to the steering lock ECU.
l)	The steering lock ECU receives the steering unlock signal via the ID code box, and releases the steering lock.
m)	After checking the steering unlock condition, the certification ECU transmits an engine immobilizer disengage signal to the ID code box.
n)	The ID code box certifies the disengage signal of the certification ECU, transmits the engine immobilizer disengage signal to the ECM, and disengages the engine immobilizer.

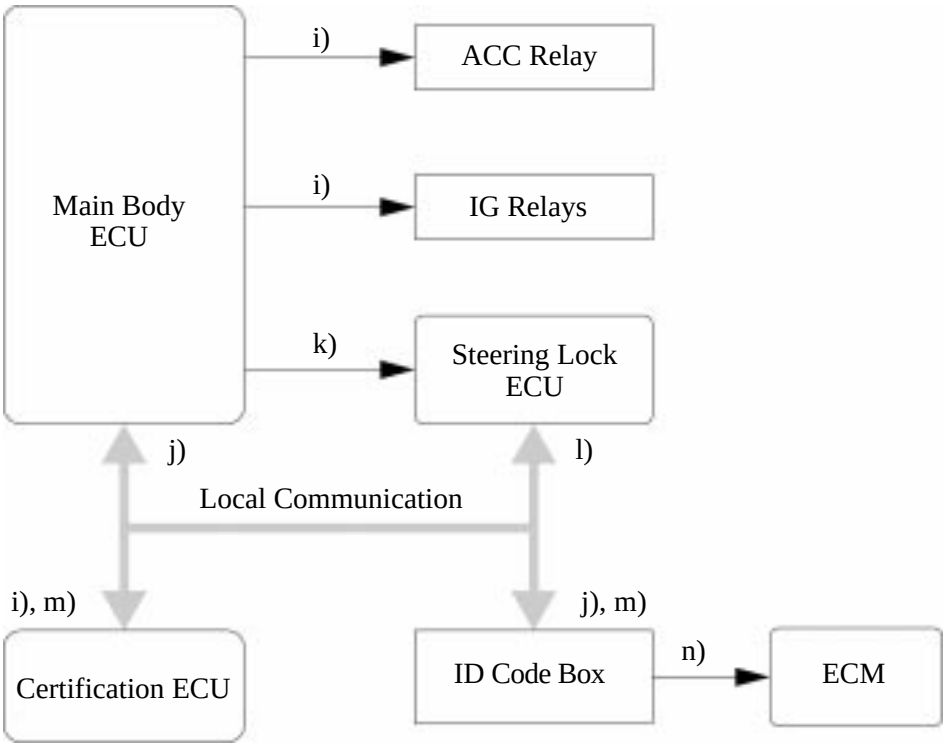

0140BE133C

(Continued)

Step	System Operation
o)	After checking that the steering is in the unlocked condition, the main body ECU transmits a starter request (STSW) signal to the ECM.
p)	The ECM receives this signal, outputs an ST relay (STAR) signal, and actuates the starter. (For details see the cranking hold function on page EG-132.)
q)	The ECM and main body ECU both output the starter relay signal in order to actuate the starter. Both the ECM and main body ECU output the signal in order to prevent situations where the starter may fail to operate, such as when the battery voltage supplied to the ECM is low.
r)	When the ECM judges from the engine speed that engine start is completed, it stops the starter relay (STAR) signal, and stops the starter.
s)	The main body ECU receives this signal, checks that engine start is completed, and turns OFF the indicator light of the engine switch.

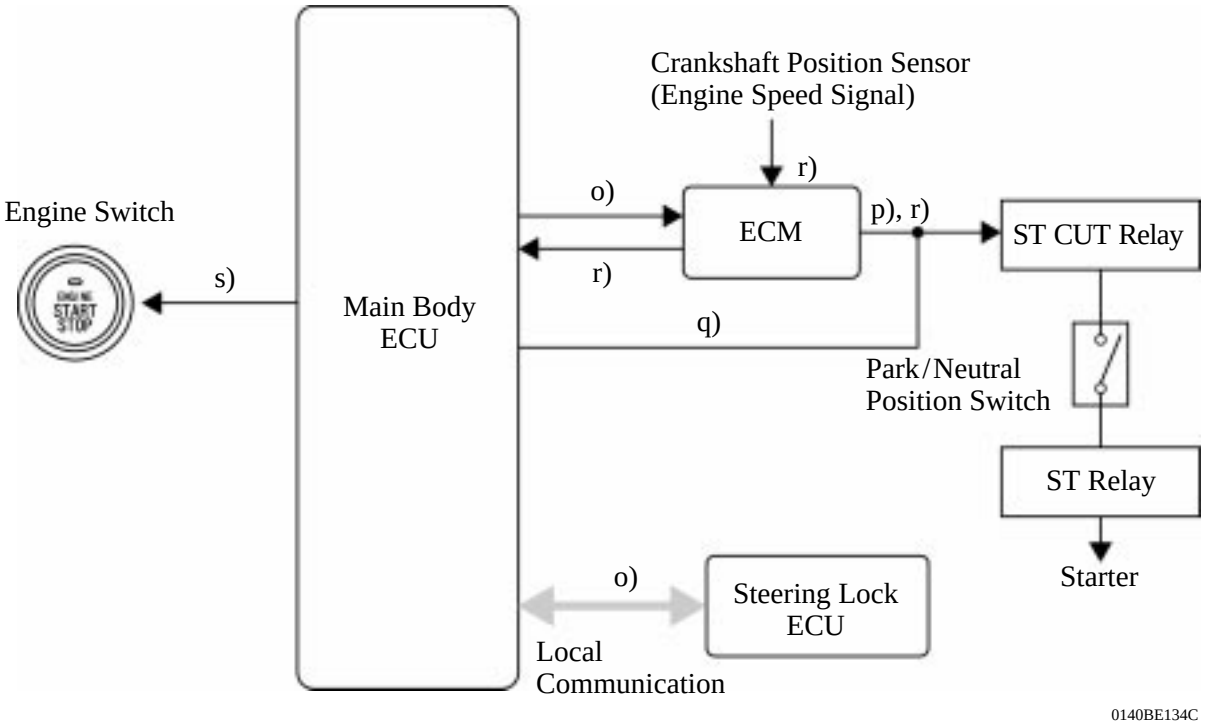

Pattern B: OFF △ ACC △ IG ON △ OFF

1) OFF △ ACC

Step	System Operation
a)	The driver has the key in their possession and enters the vehicle.
b)	When the driver presses the engine switch once with the following conditions satisfied, the main body ECU recognizes the engine switch signal and transmits the key certification request to the certification ECU. Shift position is P. Brake pedal is not depressed. Power source is OFF.
c)	Due to the brake pedal not being depressed, the main body ECU will turn ON the amber indicator light of the engine switch.
d)	The rest of the system operation is the same as **d) to h) in pattern A**. For details, see page BE-98.

2) ACC △ IG ON

Step	System Operation
a)	When the power source is at ACC and the driver pressed the engine switch again, the main body ECU recognizes the engine switch signal and turns ON the IG relays.
b)	The rest of the system operation is the same as **j) to n) in pattern A**. For details, see page BE-99.

3) IG ON △ OFF

Step	System Operation
a)	When the engine switch is pressed once with the following conditions satisfied, the main body ECU recognizes the engine switch signal and turns OFF the ACC, IG relays. Shift position is P. Brake pedal is not depressed. Vehicle speed is 0 km/h (0 mph). Power source is in IG-ON mode.
b)	When the power source is switched from IG-ON to OFF, the main body ECU will turn OFF the indicator light of the engine switch.
c)	If the driver's door is opened, the main body ECU receives a signal from the courtesy switch (for driver door). Then, the power supply to the steering lock ECU stops in order to lock the steering.

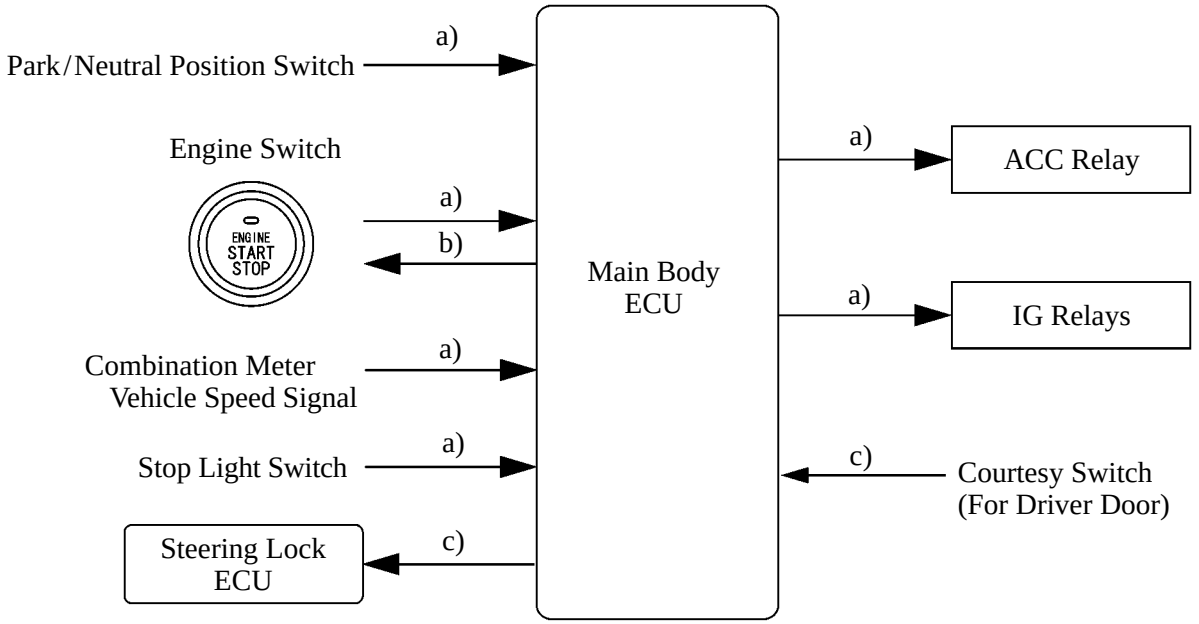

01YBE70P

Pattern C: OFF △ ACC △ IG ON △ ACC

Step	System Operation
a)	The system operations for the power source OFF △ ACC △ IG ON are the same as those in pattern B. For details, see page BE-101.
b)	When the engine switch is pressed once with the following conditions satisfied, the main body ECU recognizes the engine switch signal and turns OFF the IG relays. Shift position is in any position except P. Brake pedal is not depressed. Vehicle speed is 0 km/h (0 mph). Power source is in IG-ON mode.
c)	Even after the power source switches from IG ON to ACC, the indicator light of the engine switch will remain illuminated in amber.

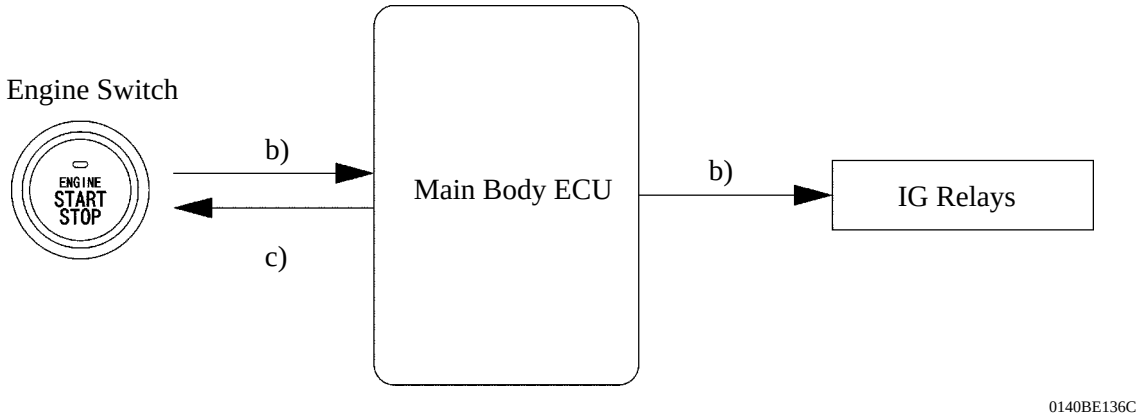

Pattern D: IG ON △ OFF

This system operation is the same as IG ON △ OFF for pattern B. For detail, see page BE-101.

Pattern E: IG ON △ ACC

This system operation is the same as pattern C. For details, see page BE-103. However, the indicator light of the engine switch will illuminate as follows:

When the power source is switched from IG-ON to ACC, the main body ECU makes the amber indicator light of the engine switch continue to illuminate.

When the power source is switched from engine running to OFF, the main body ECU turns OFF the indicator light of the engine switch.

When key battery is low

Step	System Operation
a)	To operate the push button start system when the key battery is low, hold the key against the engine switch as shown below while depressing the brake pedal.
b)	The main body ECU receives the stop light switch signal and transmits a key certification request signal to the certification ECU.
c)	The certification ECU does not receive an ID code response from the tuner, so it actuates the transponder key amplifier built into the engine switch.
d)	The transponder key amplifier outputs an engine immobilizer radio wave to the key.
e)	The key receives the radio wave, and returns a radio wave response to the transponder key amplifier.
f)	The transponder key amplifier combines the key ID codes with the radio wave response, and transmits it to the certification ECU.
g)	The certification ECU judges and verifies the ID code, and transmits a key certification OK signal to the main body ECU. The buzzer in the combination meter sounds at the same time.
h)	After the buzzer sounds, if the engine switch is pressed within five seconds while the brake pedal is depressed, the power source switches to start the engine running, the same as with normal smart key operation.
i)	After the buzzer sounds, if the engine switch is pressed within five seconds while the brake pedal is not depressed, the power source will be switched to ACC or IG-ON, the same as with normal smart key operation.

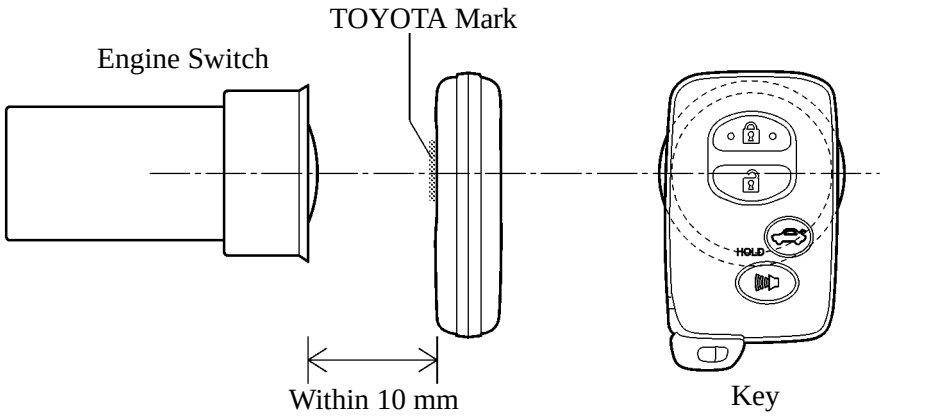

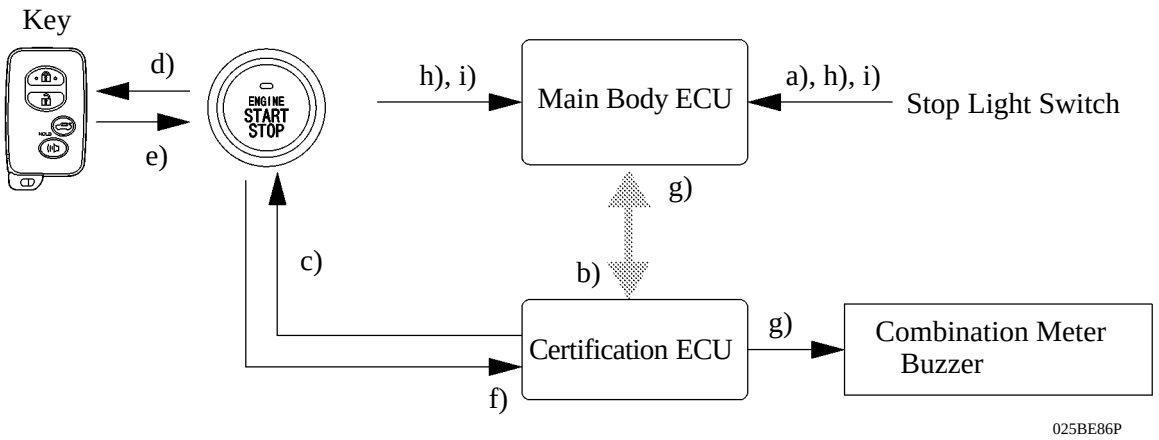

7. Diagnosis

Main body ECU and certification ECU can detect malfunctions in the smart key system when the power source is in the IG-ON mode.
When the ECUs detect a malfunction, the amber indicator light of the engine switch flashes to warn the driver. At the same time, the ECUs store 5-digit DTC (Diagnostic Trouble Code) in their memories.

The indicator light warning continues for 15 seconds even after the power source is switched to OFF.

The DTC can be read by connecting a hand-held tester to the DLC3.

The push button start system may not operate successfully if a malfunction occurs.

Service Tip

The ECM of the ’07 Camry uses CAN protocol for diagnostic communication. Therefore, a hand-held tester and a dedicated adapter [CAN VIM (Vehicle Interface Module)] are required for accessing diagnostic data. For details, see the 2007 Camry Repair Manual (Pub. No. RM0250U).

▪ ENTRY FUNCTION

1. System Diagram

The certification ECU controls the entry function. The system diagram below shows the main components that relate to the function.

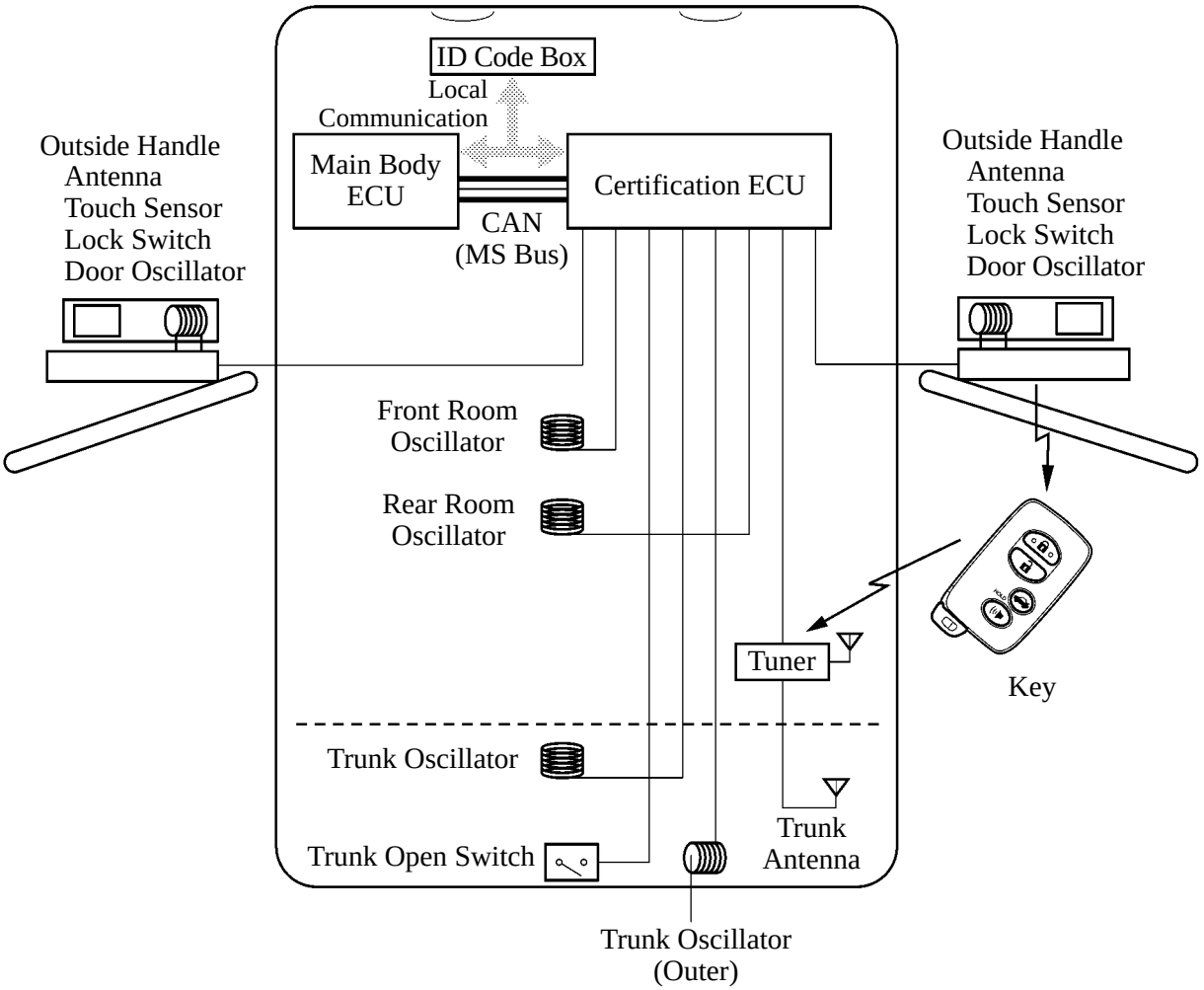

025BE87TE

2. Layout of Main Components

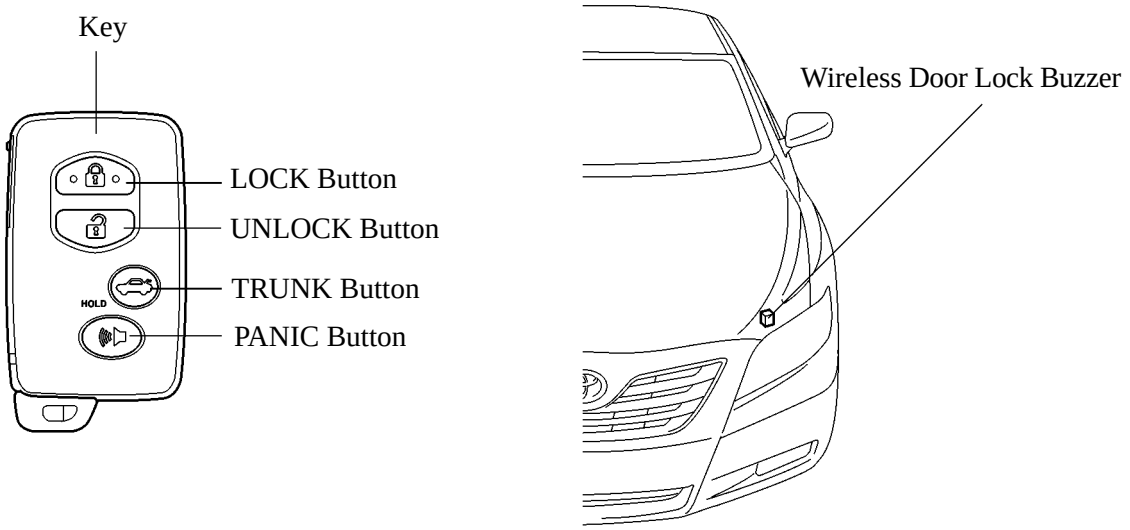

025BE88Y

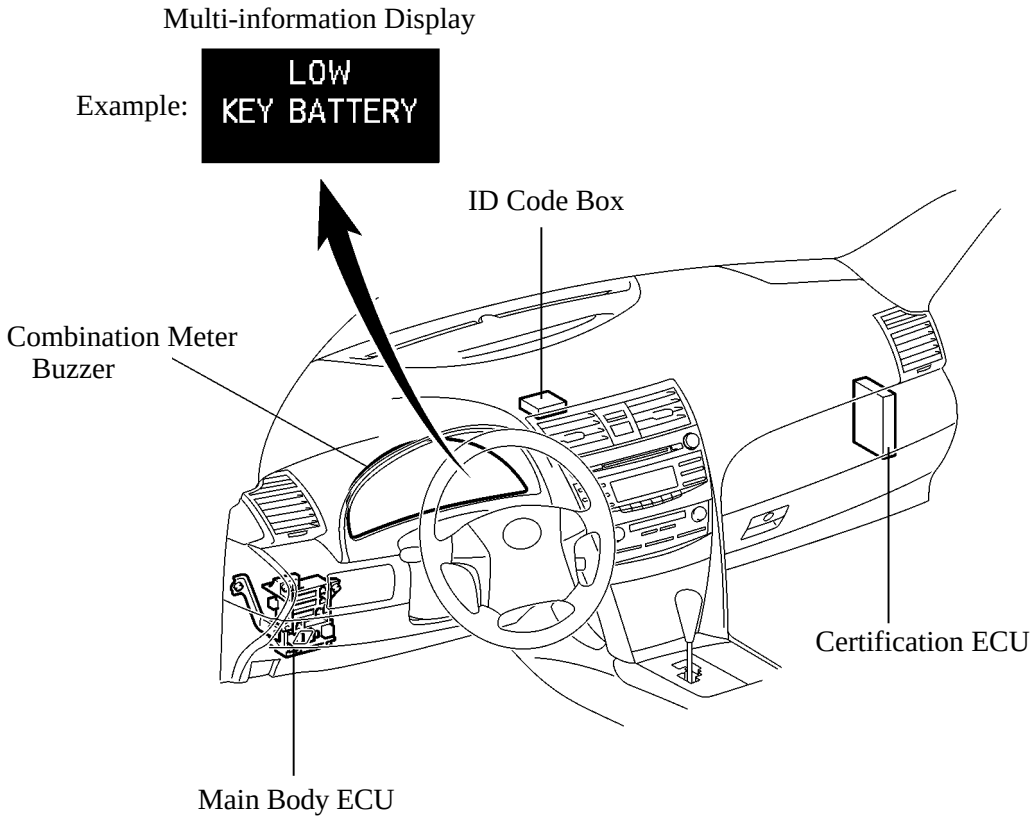

025BE89TE

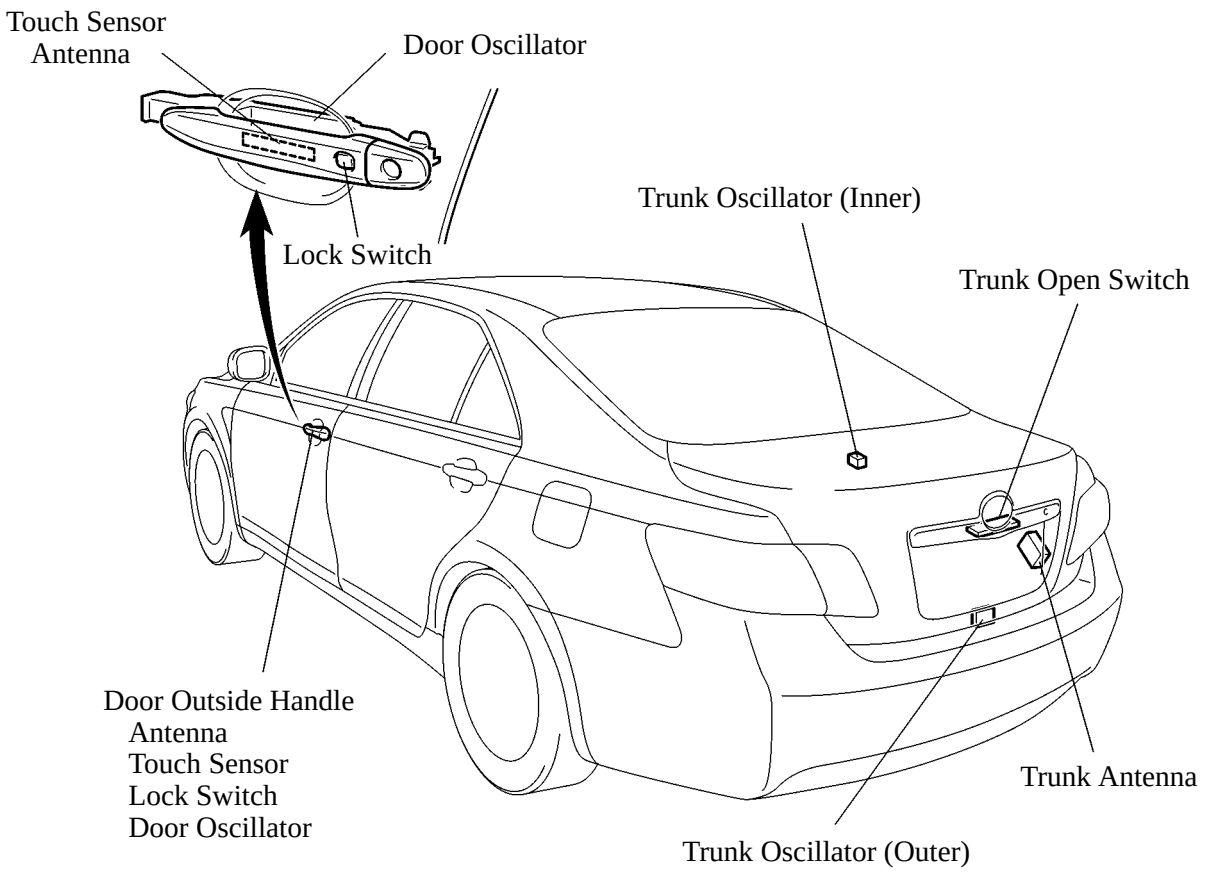

025BE90TE

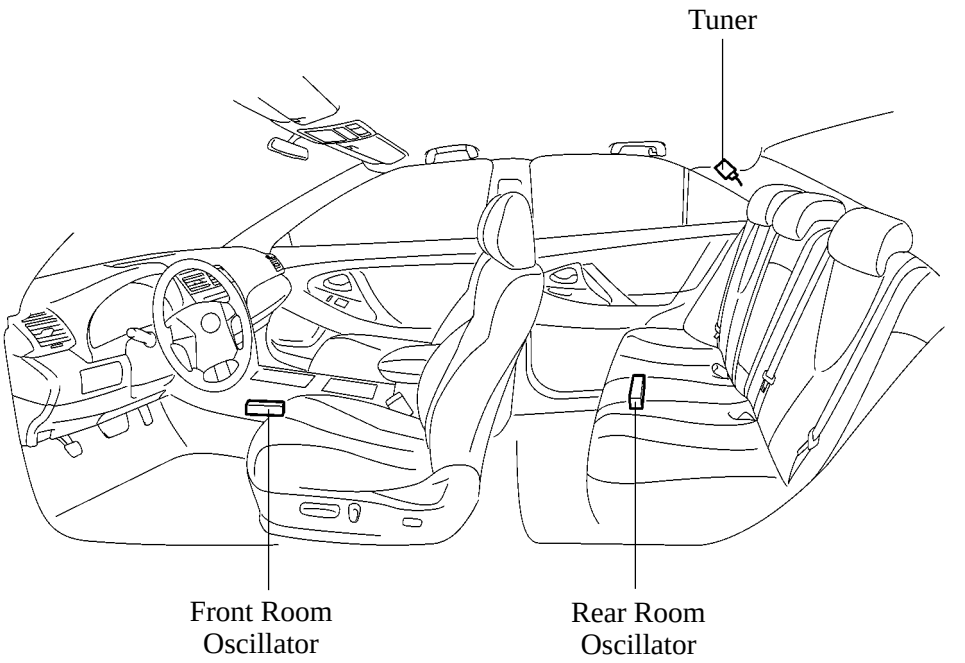

025BE91TE

3. Function of Main Components

Component		Function
Key		The key consists of a mechanical key, the transmitter for the wireless door lock remote control, the transceiver for the smart key system and a transponder chip for the engine immobilizer control.
Certification ECU		Controls the smart key system in accordance with the signals from each oscillator, various switches, ECUs and the key. Judges and certifies the ID code from the tuner. Transmits the engine immobilizer deactivation signal to the ID code box. Transmits steering unlock signals to the steering lock ECU.
Main Body ECU		Controls the smart key system in accordance with the signals from the various switches, ECUs and combination meter. Transmits the key certification request signal to the certification ECU in accordance with the engine switch signal, and turns the relays ON and OFF. Receives the request signal from the certification ECU and actuates the door lock motor to unlock or lock the door. Transmits the condition each door to the certification ECU.
ID Code Box		Receives and certifies the engine immobilizer deactivation signal transmitted from the certification ECU, and sends it to the ECM.
Outside Handle (Front RH and LH)	Antenna	Transmits the request signals.
	Touch Sensor	Detects when a person touches the inside of an outer door handle.
	Lock Switch	Transmits door lock request signals to the certification ECU.
	Door Oscillator	Receives the request signal from the certification ECU, and creates an actuation area around front door.
Room Oscillator Front and Rear		Receives the request signal from the certification ECU, and forms the actuation area in the vehicle interior.
Trunk Oscillator Inner		Receives the request signal from the certification ECU, and forms the actuation area in the trunk.
Trunk Oscillator Outer		Receives the request signal from the certification ECU, and forms the actuation area around the trunk lid.
Tuner		Receives the ID code from the key in the actuation area and transmits it to certification ECU. Receives the ID code from the key in the trunk and transmits it to certification ECU.
Trunk Antenna		Receives the ID code from the key in the luggage room and transmits it to the tuner.
Trunk Open Switch		Transmits a trunk lid open request signal to certification ECU.
Wireless Door Lock Buzzer		Sounds as an answerback for entry lock or unlock to inform the driver.
Combination Meter	Multi-information Display	When the certification ECU detects human error, it warns the driver by sounding the wireless door lock buzzer and the buzzer in the combination meter, and by illuminating a warning on the multi-information display and the master warning light, in accordance with the request signal from the certification ECU.
	Master Warning Light	
	Buzzer	

4. Construction and Operation

Key

The key consists of a mechanical key, a transmitter for the wireless door lock remote control and a transceiver for the smart key system, and a transponder chip for the engine immobilizer control.

The transceiver function of the key receives the signals from the oscillators and returns the ID code to the tuner.

The transmitter function for the wireless door lock remote control has a LOCK button, UNLOCK button, TRUNK button, and PANIC button.

The transponder chip in the key for the engine immobilizer control returns a signal to the engine switch as a response to the radio wave it received from the engine switch.

This mechanical key operates the driver door lock cylinder, glove box lock cylinder, and trunk strage extensiion lock cylinder but cannot be used to start the engine.

A total of four keys can be registered. For details, see the 2007 Camry Repair Manual (Pub. No. RM0250U).

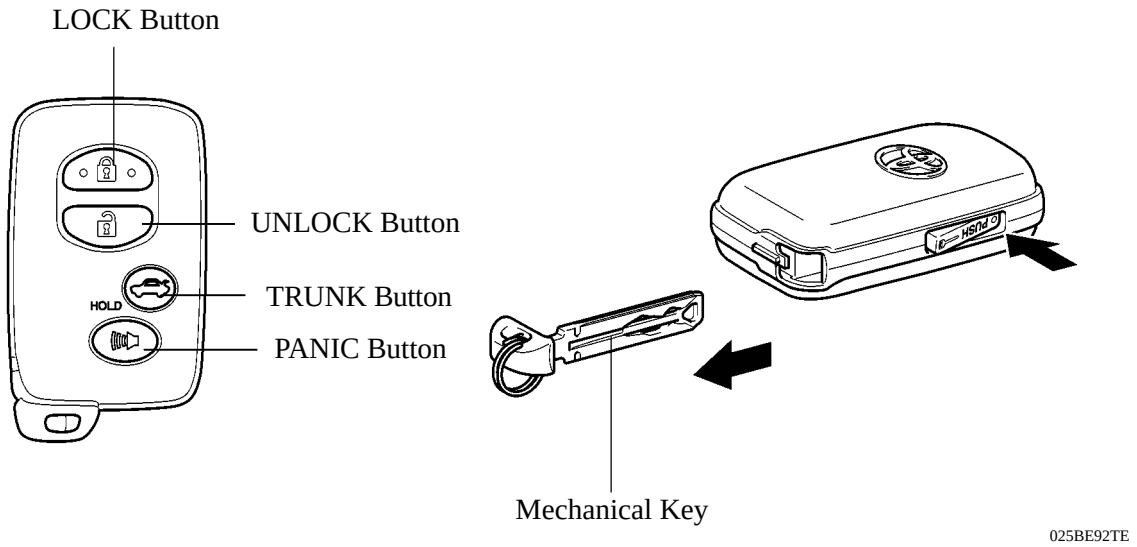

Oscillator (Driver and Front Passenger Door, Front and Rear Rooms, Trunk Inner, Trunk Outer)

Each oscillator functions based on a request signal received from the certification ECU, and creates a key actuation area that is used to detect the presence of a key.

The actuation area formed by the front door oscillator and trunk outer oscillator is approximately 0.7 to 1.0 m (2.3 to 3.3 ft.) from the outside handle of the front doors, or the center of the rear bumper.

The actuation area of front door oscillator is formed by transmitting a request signal every 0.25 seconds while the engine switch is OFF and each door is locked. In this way it detects the proximity of a key. When locking the door using the lock switch on the outer door handle, the actuation area is formed when the lock switch is pressed.

The actuation area of the trunk outer oscillator is formed when the trunk open switch is ON. It is formed twice to allow the key to be verified.

The actuation area of the front and rear room oscillator is formed when the driver door is opened or closed, when the start button is pressed, when a warning is activated, or when the lock switch is ON.

The actuation area of the trunk inner oscillator forms when the trunk lid is closed or the trunk open switch is pressed, and is formed twice to allow the key to be verified.

5. Entry Function Operation

General

The entry function has the following functions.

Function	Outline
Mechanical Key [See page BE-110]	The key consists of a mechanical key, a transmitter for the wireless door lock remote control and a transceiver for the smart key system, and a transponder chip for the engine immobilizer control.
Wireless Door Lock Remote Control [See page BE-112]	This function is a convenient system for locking and unlocking all the doors or trunk, at a distance. The operation is same as wireless door lock remote control system.
Entry Illumination [See page BE-112]	When a key enters the actuation area of front door oscillators, the front interior light, and engine switch illumination illuminate.
Entry Unlock [See page BE-113]	When a key is located in the actuation area front door oscillators, the door will unlock after the inside of an outside door handle is touched.
Entry Unlock Mode Switching [See page BE-114]	Allows selection of one of two modes that can be operated with the entry unlock function. Driver Door Mode All Door Mode
Entry Lock [See page BE-115]	When a key is located in the actuation area of either front door oscillator and the power source is OFF, the door can be locked by merely pressing the lock switch on the outside door handle.
Trunk Open [See page BE-116]	When a key is in the actuation area of the trunk outer oscillator, the trunk can be opened by merely pressing the trunk open switch.
Prevention of Key Confinement [See page BE-117]	Prevents the confinement of the key in the vehicle by the door being locked with the outside door handle while the key is still inside the vehicle. If the trunk lid is closed while the key is still in the luggage compartment, the warning buzzer sounds. If the trunk open switch is operated for 2 seconds during this period, the trunk lid can be opened.
Warning [See page BE-119]	When any of the situations below occur, the smart key system causes the certification ECU to sound the buzzer in the combination meter and the wireless door lock buzzer, and indicate a warning on the multi-information display in order to the alert the driver. An exit warning if the shift lever is in a position other than P and the power source is a mode other than OFF. An exit warning if the shift lever is in P and the power source is a mode other than OFF. A warning if the occupant leaves with the key in inappropriate circumstances. A warning if the engine switch is operated while the key is outside the actuation area. A warning if the entry lock button on the door handle is operated while the key is inside the vehicle. A warning if the key battery is weak.
Battery Saving [See page BE-129]	If the key remains within the actuation area of the front door oscillators, the system maintains periodic communication with key. Therefore, if the vehicle remains parked in that state for a long time, the key battery and the vehicle battery could be drained.
Key Cancel [See page BE-130]	The following key functions can be cancelled by following certain procedures. Entry unlock/lock Trunk open Prevention of key confinement Warning
Key Code Registration [See page BE-130]	A total of four keys can be registered. Enables the registering (writing and storing) of transmitter recognition codes in the EEPROM that is contained in the certification ECU.

Wireless Door Lock Remote Control Function

The wireless door lock remote control function has the following functions:

Function	Outline
All Doors Lock	Pressing the LOCK button of the transmitter locks all doors.
All Doors Unlock	Pressing the UNLOCK button of the transmitter (key) unlocks all doors.
All Doors Unlock (2-step Unlock)*	Pressing the UNLOCK button of the transmitter once unlocks the driver's door, and pressing it again within three seconds unlocks all the doors.
Trunk Opener*	Keeping the TRUNK button of the transmitter pressed longer than about 1 second opens the trunk lid.
Answer Back*	The hazard light flashes once when locking, and flashes twice when unlocking, to indicate that the operation has been completed.
Panic Alarm	Keeping the PANIC button of the transmitter pressed longer than about 1 of a second causes the following functions of the alarm to activate. Sounds the horn and security horn. Flashes the hazard lights, headlights, and taillights. Illuminates the interior light (If the interior light switch is in the DOOR position).
Automatic Lock*	If none of the doors are opened within 60 seconds of being unlocked by the wireless door lock remote control, all the doors will be locked again automatically.
Door Ajar Warning*	If any door is open or ajar, pressing the LOCK button of the transmitter will cause the wireless door lock buzzer to sound for about ten seconds.
Repeat	If a door is not locked in response to the locking operation of the transmitter, the integration relay will output a lock signal after approximately 1 second.
Illuminated Entry	When all the doors are locked, pressing the UNLOCK button causes the interior lights to illuminate simultaneously with the unlock operation.
Security	Sends an operation signal as a rolling code.
Wireless Buzzer	The wireless door lock buzzer sounds when the theft deterrent system performs warning operations.

*: The function setting can be changed using the customized body electronics system. For details, refer to Customized Body Electronics System section on page BE-13.

Entry Unlock

a) When a key enters any actuation area of the door oscillators, the certification ECU judges and certifies the key ID code received from the tuner.

b) After the key certification OK is confirmed, the certification ECU transmits an unlock stand-by signal to the touch sensor of the relevant door.

c) At the same time, the certification ECU transmits the lighting signals to the foot light on the outside rear view mirror and interior lights (engine switch illumination and interior light), and turns ON these illuminations (Entry Illumination Function).

d) If the touch sensor is touched during this condition, the certification ECU transmits a door unlock signal to the main body ECU, and unlocks the door.

e) The certification ECU sounds the wireless door lock buzzer twice and main body ECU blinks the hazard warning light twice as an answerback for entry unlock.

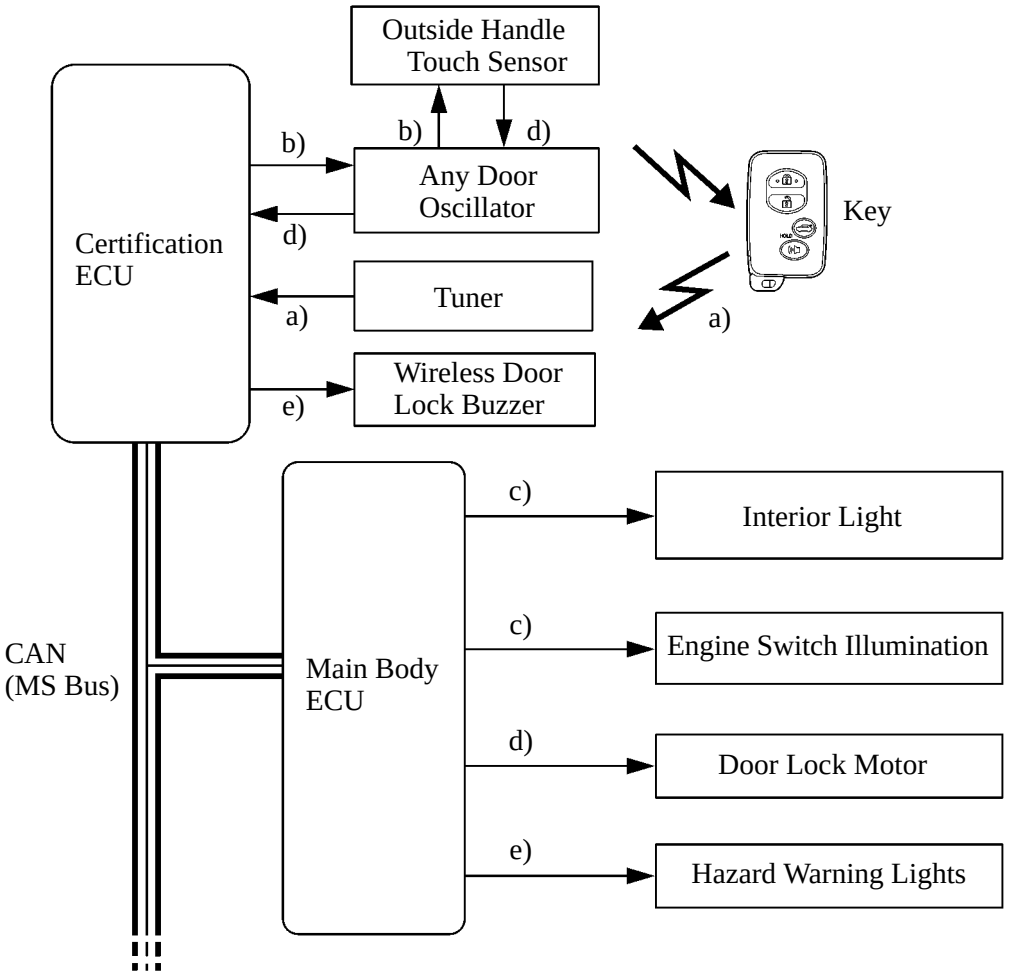

025BE93P

Entry Unlock Mode Switching

a) When the power source is OFF, press the lock button and one of the other three buttons on the key at the same time for approximately 5 seconds while the key is in the actuation area.

b) The certification ECU receives this signal from the tuner and switches the entry unlock mode.

c) The certification ECU sounds the wireless door lock buzzer and the buzzer of the combination meter to inform the user that the mode has been switched.

d) If the entry unlock mode needs to be switched again, press the lock button and one of the other three buttons on the key at the same time for approximately 5 seconds after the LED of the key goes off.

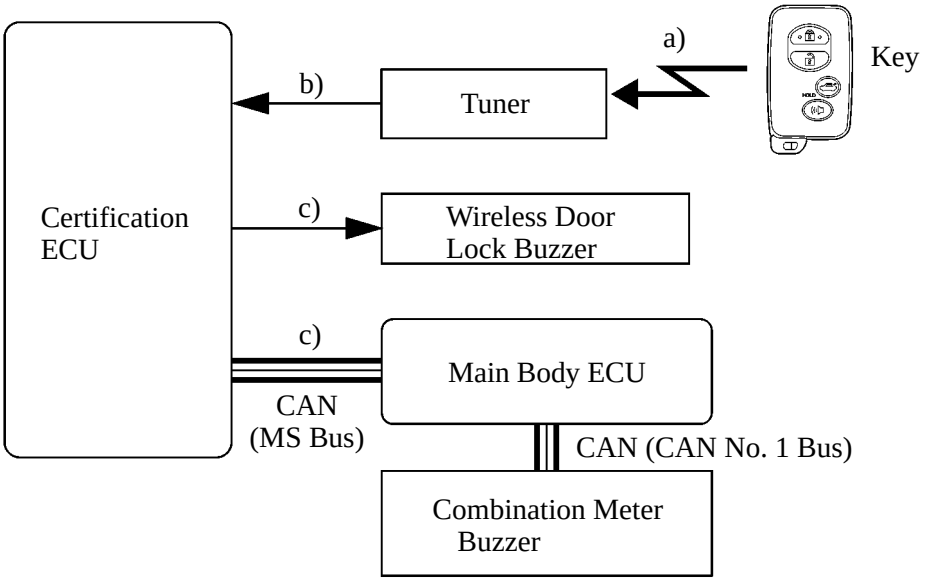

025BE94P

Mode	Wireless Door Lock Buzzer	Buzzer in Combination Meter	Multi-information Display
Driver Door (Default)	Sounds three times	Sounds once	
All Doors (Customized)	Sounds once	Sounds once	

025BE126TE

NOTE: This function only switches the entry unlock mode of the smart key system. It is not applied to the unlock function using the wireless door lock remote control.

Entry Lock Function

a) This signal is transmitted to the certification ECU when the driver (who has the key in their possession), exits the vehicle and presses the lock switch on the outside door handle.

b) The certification ECU transmits a request signal for all door and room oscillators to form actuation areas.

c) The key receives this signal and returns the ID code to the tuner.

d) The certification ECU judges and certifies the ID code from the tuner. It then checks the location of the key and, if all the doors are closed, the ECU transmits a door lock signal to the main body ECU.

e) The main body ECU receives this signal and actuates the door lock motors to lock the doors.

f) The main body ECU blinks hazard warning lights once and the certification ECU sounds the wireless door lock buzzer once as an answerback for the entry lock function.

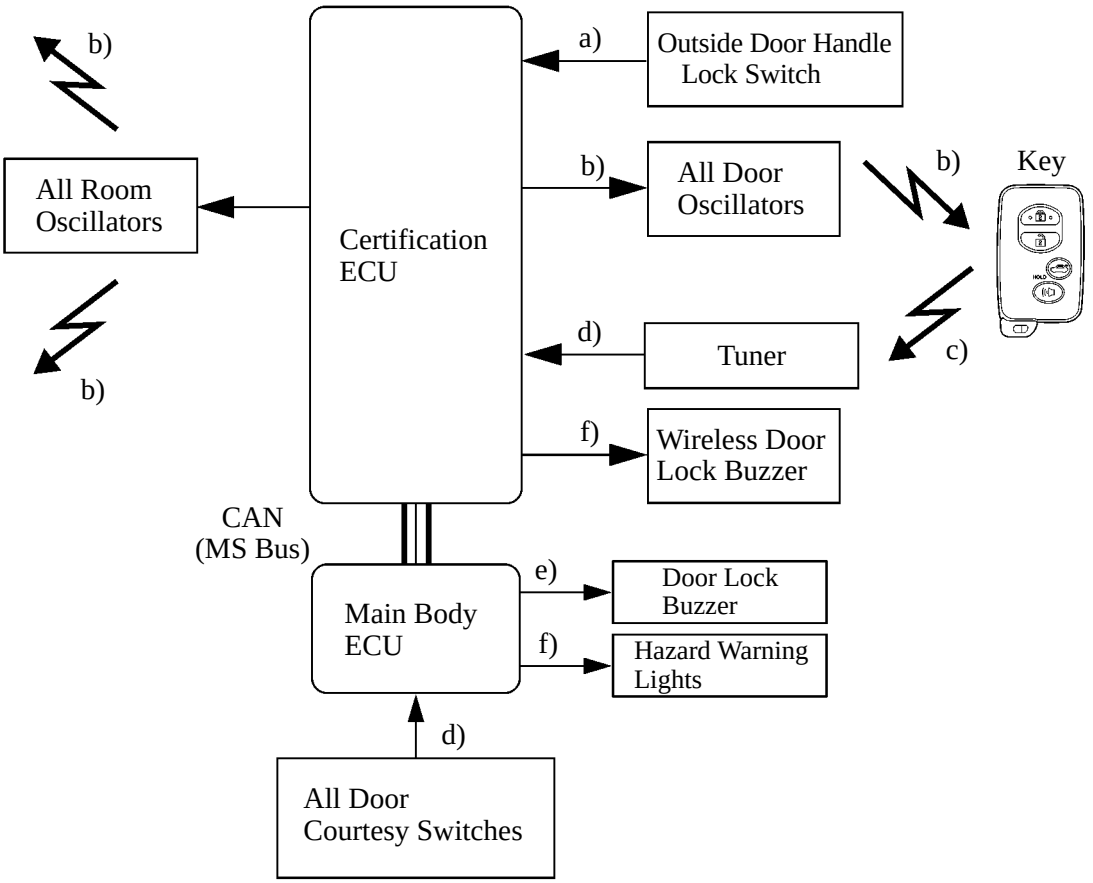

025BE95P

Trunk Open Function

a) This signal is transmitted to the certification ECU when the driver (who has the key in their possession) pushes the trunk open switch on the outside of the trunk lid.

b) The certification ECU transmits a request signal for all the room, trunk inner and outer oscillators to form actuation areas.

c) The key receives this signal and returns the ID code to the tuner.

d) The certification ECU judges and certifies the ID code, and checks the location of the key. The ECU transmits a trunk open signal to the main body ECU.

e) The main body ECU receives this signal and actuates the luggage door unlock motor to open the trunk.

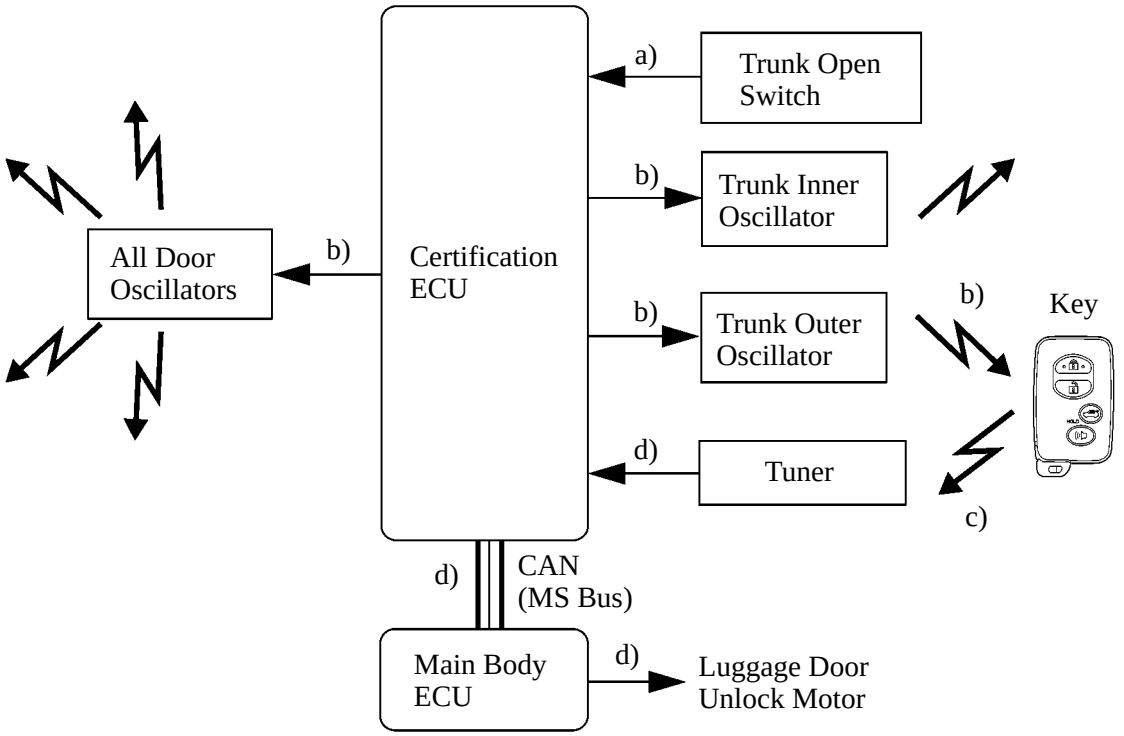

025BE96P

Prevention of Key Confinement

1) General

This function has two system operations: inside room (cabin) and inside luggage compartment.

2) Inside Room

a) When the door is locked with the outside door handle while the key is still inside the vehicle, the certification ECU receives this signal and transmits a request signal for the front and rear room oscillators to form a actuation area.

b) The key receives this signal and returns the ID code to the tuner.

c) The certification ECU judges and certifies the ID code, and checks the location of the key. The ECU transmits a door unlock signal to the main body ECU.

d) The main body ECU receives the signal and operates each door lock motor to unlock the doors.

e) The certification ECU sounds the wireless door lock buzzer and the buzzer of the combination meter as an answerback for the unlock function that was performed.

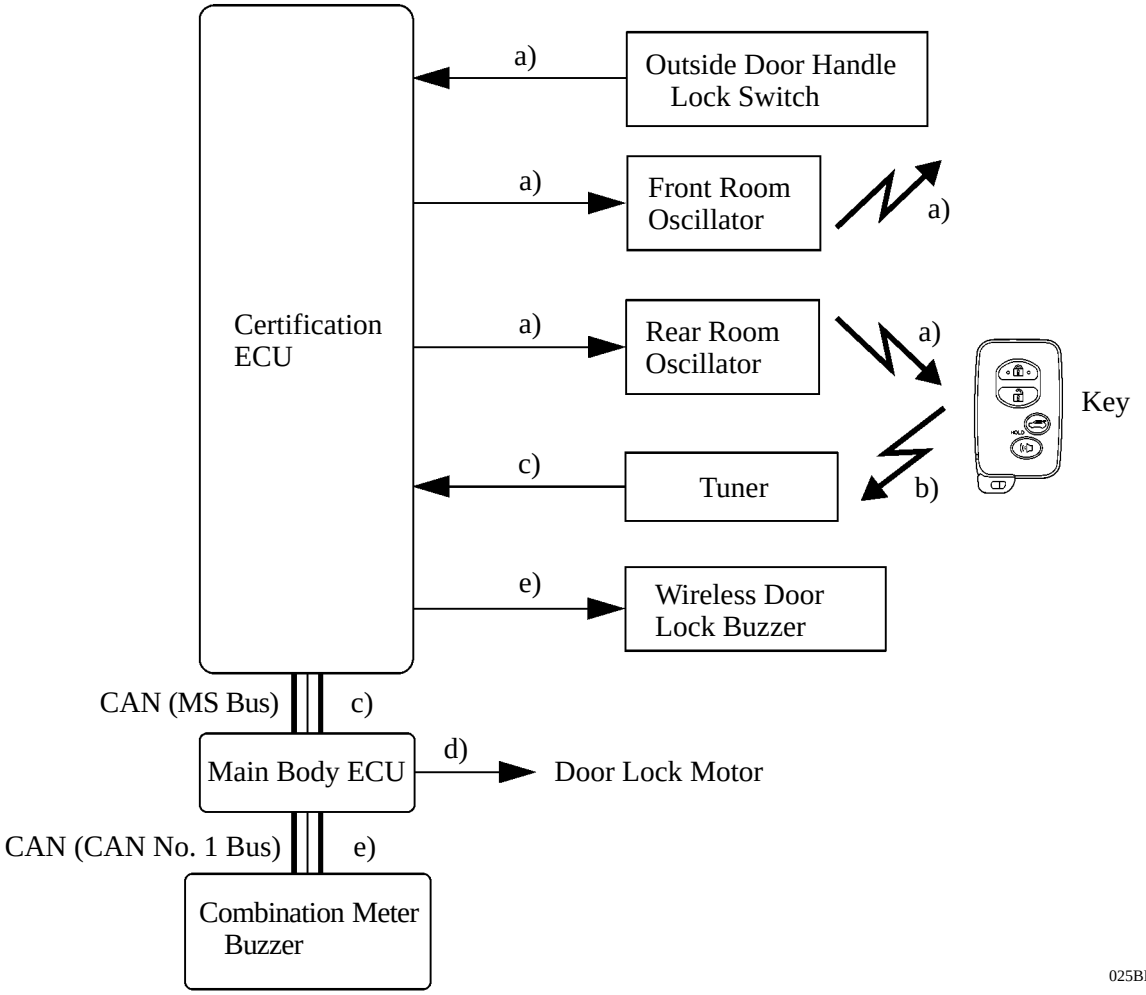

3) Inside Luggage Room

a) When the trunk lid is closed while the key is still inside the luggage room and all doors are locked, the certification ECU recognizes that a trunk lid close condition has occurred based on signals from the main body ECU.

b) The certification ECU receives this signal, and transmits a request signal for the trunk inner oscillator to form an actuation area.

c) The key receives this signal and returns the ID code to the tuner.

d) The certification ECU judges and certifies the ID code, and checks the location of the key. The ECU sounds the wireless door lock buzzer for 2 seconds to inform the driver.

e) If the trunk open switch is turned ON (pressed) while the key is inside the luggage room, the certification ECU sends another request signal for the trunk inner oscillator to form an actuation area. The ECU judges and certifies the key and checks its location, before transmitting a trunk open signal to the main body ECU.

f) The main body ECU receives the signal and operates the luggage door lock motor to open the trunk.

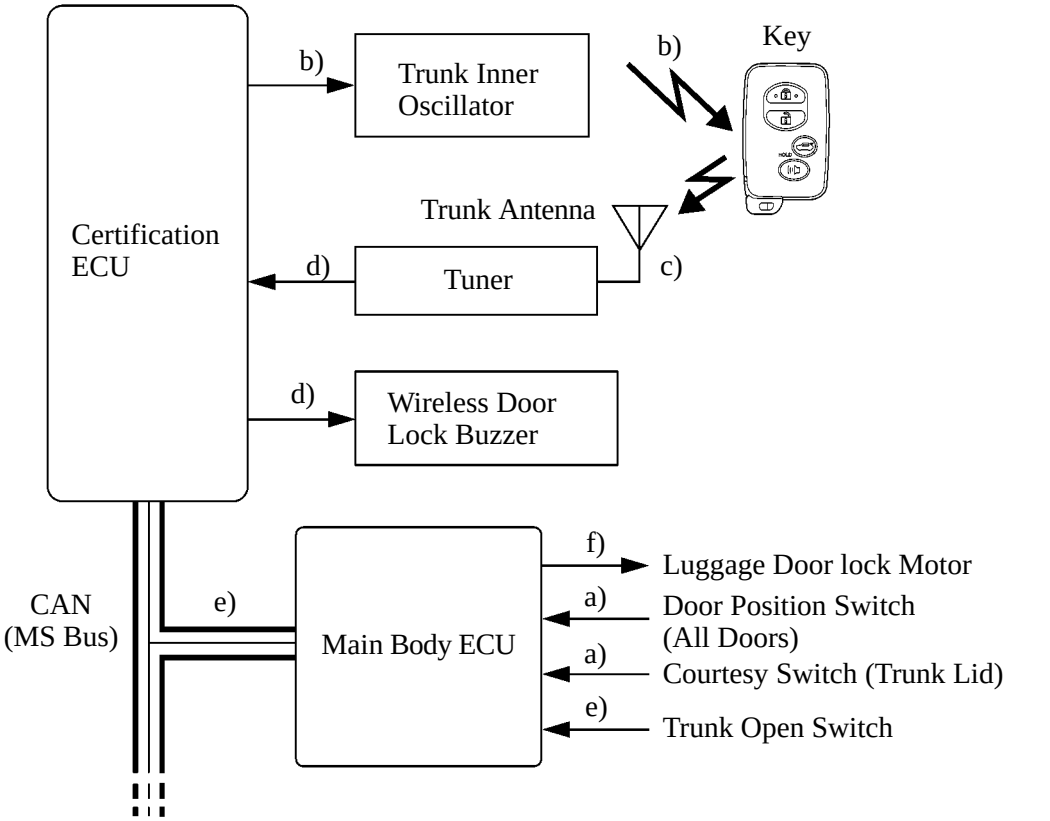

025BE98P

Warning

1) General

When any of the situations below occur, the smart key system causes the certification ECU to sound a buzzer in the combination meter and the wireless door lock buzzer, and illuminate the multi-information display in order to the alert the driver.

Situation	Condition
A	The engine is left running and the shift lever is in a position other than P when the driver gets out of the vehicle.
B	The key is left in the vehicle.
C	The engine is left running and the shift lever is in the P position when the driver gets out of the vehicle.
D	A door is ajar.
E	The engine is left running when a passenger gets out of the vehicle holding the key.
F	The key is not within the actuation areas.
G	The key is left in the cabin.
H	The key is left in the luggage room.
I	The key battery is weak.
J	Steering lock does not release.
K	The steering lock mechanism is malfunctioning.
L	The main body ECU is malfunctioning.
M	An engine start method is displayed.

2) Situation: A

There are two patterns for situation A.

Pattern 1: When the engine is left running and the shift lever is in a position other than P, the driver opens the door and attempts to get out of the vehicle.

Pattern 2: Under the conditions of pattern 1, the driver closes the door and attempts to leave the vehicle holding the key.

In these situations, the following control is performed:

Pattern 1.

Possible Effects without Warning		Sudden vehicle start, Vehicle theft, Vehicle roll-away
Warning Condition		The warning is activated when all of the following conditions are met: Power source is in a mode other than OFF. Shift lever is in any position except P. Vehicle speed is 0 mph (0 km/h).
Combination Meter	Buzzer	Continuous sound
	Multi-information Display	—
	Master Warning Light	—
Wireless Door Lock Buzzer		—
Engine Switch Indicator Light		—
Warning Stop Condition		The warning is stopped when one of the following conditions is met: Power source is OFF. Shift lever is in the P position. Vehicle speed is above 0 mph (0 km/h).

Pattern 2.

Possible Effects without Warning		Sudden vehicle start, Vehicle theft, Vehicle roll-away
Warning Condition		The warning is activated when all of the following conditions are met: Shift lever is in any position except P. Power source is in a mode other than OFF. Vehicle speed is 0 mph (0 km/h). Key is not in the vehicle. Driver door is opened Δ closed.
Combination Meter	Buzzer	Continuous sound
	Multi-information Display	The following warnings are alternately displayed: SHIFT TO P RANGE 025BE99P KEY IS NOT DETECTED 025BE100P
	Master Warning Light	Flash
Wireless Door Lock Buzzer		Sounds continuously
Engine Switch Indicator Light		—

Warning Stop Condition	Key is in the vehicle.	
		The wireless door lock buzzer stops. Multi-information Display: SHIFT TO P RANGE 025BE99P
	Vehicle speed is above 0 mph (0 km/h).	
		The wireless door lock buzzer stops. Multi-information Display: KEY IS NOT DETECTED 025BE100P
	Power source is OFF.	
		All warning operations stop.

3) Situation: B

There are two patterns for situation B.

Pattern 1: When the driver's door is open, the driver changes the power source mode to ACC and attempts to leave the vehicle.

Pattern 2: When the driver's door is open, the driver changes the power source mode from ON to OFF and attempts to leave the vehicle.

In these situations, the following control is performed:

Pattern 1. and Pattern 2.

Possible Effects without Warning		Vehicle theft
Warning Condition		The warning is activated when one of the following conditions is met: Power source is in ACC mode and the driver door is opened. Power source is in OFF mode the steering is unlocked, and the driver door is opened.
Combination Meter	Buzzer	Continues to sound at short and even intervals
	Multi-information Display	—
	Master Warning Light	—
Wireless Door Lock Buzzer		—
Engine Switch Indicator Light		—
Warning Stop Condition		The warning is stopped when one of the following conditions is met: Power source is in ON mode. Driver door is closed. Power source is in OFF mode and the steering is locked.

4) Situation: C

There are two patterns for situation C.

Pattern 1: When the engine is left running and the shift lever is in the P position, the driver closes the driver's door and attempts to leave the vehicle while holding the key.

Pattern 2: Under the conditions of pattern 1, the driver presses the lock switch on the door outside handle.

In these situations, the following control is performed:

Pattern 1.

Possible Effects without Warning		Vehicle theft, Engine cannot be restarted, Discharged battery
Warning Condition		The warning is activated when all of the following conditions are met: Shift lever is P. Power source is in a mode other than OFF. Key is not in the vehicle. Driver door is opened Δ closed.
Combination Meter	Buzzer	Sounds once
	Multi-information Display	KEY IS NOT DETECTED 025BE100P
	Master Warning Light	Flash
Wireless Door Lock Buzzer		Sounds three times
Engine Switch Indicator Light		—
Warning Stop Condition		The warning is stopped when one of the following conditions is met: Power source is OFF. Key is in the vehicle.

Pattern 2.

Possible Effects without Warning		Vehicle theft, Discharged battery
Warning Condition		The warning is activated when all of the following conditions are met: Shift lever is P. Power source is in a mode other than OFF. All doors are closed. The key is outside the vehicle (within one of the actuation areas).
Combination Meter	Buzzer	—
	Multi-information Display	—
	Master Warning Light	—
Wireless Door Lock Buzzer		Sounds for 2 seconds
Engine Switch Indicator Light		—
Warning Stop Condition		The warning is stopped when one of the following conditions is met: The power source is OFF and the key is not within the actuation areas. Key is in the vehicle.

5) Situation: D

The lock switch on the door outside handle is pressed to perform entry lock with a door open.
In this situation, the following control is performed:

Possible Effects without Warning		Vehicle theft, Discharged battery
Warning Condition		The warning is activated when all of the following conditions are met: Power source is OFF. Any doors are opened. Entry lock button on the outer door handle is operated.
Combination Meter	Buzzer	—
	Multi-information Display	—
	Master Warning Light	—
Wireless Door Lock Buzzer		Sounds continuously
Engine Switch Indicator Light		—
Warning Stop Condition		The warning is stopped when one of the following conditions is met: Power source is in a mode other than OFF All doors are closed. Wireless door lock remote function is unlocked. Entry unlock is operated 10 seconds have elapsed since the wireless door lock buzzer was activated.

6) Situation: E

When the engine is left running, a passenger leaves the vehicle holding the key.
In this situation, the following control is performed:

Possible Effects without Warning		Engine cannot be restarted
Warning Condition		The warning is activated when all of the following conditions are met: Power source is in a mode other than OFF. Door except driver door is opened Δ closed. Vehicle speed is 0 mph (0 km/h). Key is not in the vehicle.
Combination Meter	Buzzer	Sounds once
	Multi-information Display	KEY IS NOT DETECTED 025BE100P
	Master Warning Light	Flash
Wireless Door Lock Buzzer		Sounds 3 times
Engine Switch Indicator Light		—
Warning Stop Condition		The warning is stopped when one of the following conditions is met: Power source is OFF. Vehicle speed is above 0 mph (0 km/h). Key is in the vehicle.

7) Situation: F

When the key is not in the cabin or the key battery is dead, the driver attempts to start the engine or change the power mode to ON.
In this situation, the following control is performed:

Possible Effects without Warning		Confuses the user
Warning Condition		The warning is activated when all of the following conditions are met: Engine switch is pushed. Key is not in the vehicle.
Combination Meter	Buzzer	Sounds once
	Multi-information Display	KEY IS NOT DETECTED 025BE100P Displayed for 8 seconds (and then automatically turned off)
	Master Warning Light	Flash
Wireless Door Lock Buzzer		—
Engine Switch Indicator Light		—
Warning Stop Condition		Check if the key is in the detection area. If the key is in the detection area, press the wireless door lock switch and confirm that the indicator comes on. If the indicator does not come on, replace the key battery with a new one.

8) Situation: G

The lock switch on the door outside handle is pressed to perform entry lock with the key left in the cabin.
In this situation, the following control is performed:

Possible Effects without Warning		Vehicle theft
Warning Condition		The warning is activated when all of the following conditions are met: Power source is OFF. All doors are closed. Key is in the vehicle. Lock switch on the door outside handle switch is ON.
Combination Meter	Buzzer	—
	Multi-information Display	—
	Master Warning Light	—
Wireless Door Lock Buzzer		Sounds for 2 seconds
Engine Switch Indicator Light		—
Warning Stop Condition		The key is removed from the cabin and the lock switch on the door outside handle is pressed again.

9) Situation: H

The luggage door is closed with the key left in the luggage room.
In this situation, the following control is performed:

Possible Effects without Warning		Key Confinement
Warning Condition		The warning is activated when all of the following conditions are met: Vehicle speed is 0 mph (0 km/h). All doors are closed. Trunk open function is available.
Combination Meter	Buzzer	—
	Multi-information Display	—
	Master Warning Light	—
Wireless Door Lock Buzzer		Sounds for 2 seconds
Engine Switch Indicator Light		—
Warning Stop Condition		The luggage room is opened using the trunk open function and the key is removed from the luggage room.

10) Situation: I

The vehicle is driven using a key that has a low battery.
In this situation, the following control is performed:

Possible Effects without Warning		Smart access system does not function
Warning Condition		The warning is activated when all of the following conditions are met: Power source switches to OFF after being left in IG-ON for over 20 minutes. Key battery voltage is low. Key is in the vehicle.
Combination Meter	Buzzer	Sounds once
	Multi-information Display	LOW KEY BATTERY 025BE101P
	Master Warning Light	Flash
Wireless Door Lock Buzzer		—
Engine Switch Indicator Light		—
Warning Stop Condition		The key battery is replaced with a new one.

11) Situation: J

Steering lock cannot be released.
In this situation, the following control is performed:

Possible Effects without Warning		Steering usability function
Warning Condition		The Steering lock cannot be released, thus the engine is prevented from starting.
Combination Meter	Buzzer	Sounds once
	Multi-information Display	S/T IS NOT UNLOCKED 025BE102P Displayed for 15 seconds (and then automatically turned off)
	Master Warning Light	Flash
Wireless Door Lock Buzzer		—
Engine Switch Indicator Light		The green indicator blinks at 1-second intervals (goes off automatically in 15 seconds).
Warning Stop Condition		The engine switch is pressed while the steering wheel is turned left and right, and the steering lock successfully disengages.

12) Situation: K

A malfunction of the steering lock ECU is detected.
In this situation, the following control is performed:

Possible Effects without Warning		Malfunction detection
Warning Condition		A malfunction of the steering lock ECU is detected.
Combination Meter	Buzzer	Sounds once
	Multi-information Display	CHECK S/T LOCK 025BE103P
	Master Warning Light	Flash
Wireless Door Lock Buzzer		—
Engine Switch Indicator Light		The amber indicator blinks at 2-second intervals.
Warning Stop Condition		The steering lock ECU returns to normal.

13) Situation: L

A malfunction of the main body ECU is detected.
In this situation, the following control is performed:

Possible Effects without Warning		Malfunction detection
Warning Condition		A malfunction in the main body ECU is detected.
Combination Meter	Buzzer	—
	Multi-information Display	—
	Master Warning Light	—
Wireless Door Lock Buzzer		—
Engine Switch Indicator Light		The amber indicator blinks at 2-second intervals.
Warning Stop Condition		The main body ECU returns to normal.

14) Situation: M

A warning message appears on the meter when the driver does not follow the proper procedure to start the vehicle.
In this situation, the following control is performed:

Possible Effects without Warning		Usability function
Warning Condition		The warning is activated when all of the following conditions are met: Power source is in a mode other than ON. Any doors are closed Δ opened. The power source is changed from OFF to ACC more than once with the engine off and brake pedal not depressed.
Combination Meter	Buzzer	Sounds once
	Multi-information Display	WHEN STARTING THE ENGINE, DEPRESS THE BRAKE PEDAL 025BE104P
	Master Warning Light	—
Wireless Door Lock Buzzer		—
Engine Switch Indicator Light		—
Warning Stop Condition		The warning is stopped when one of the following conditions is met: 10 seconds have elapsed since a warning message was displayed. The engine switch is pushed with the brake pedal depressed.

Battery Saving

1) Vehicle Battery Saving Function

In the smart key system, signals are emitted outside the vehicle at a prescribed interval (250 msec.) when the doors are locked. Therefore, the vehicle battery could be drained if the vehicle remains parked for a long time. For this reason, the controls listed below are effected.

Condition	Control
No response from key for more than 5 days	Signal transmission interval is extended from 250 msec. to 750 msec.
No response from key for more than 14 days	Automatically deactivates the smart key system.

▶ Reinstatement Conditions ●

A wireless door lock remote control signal (lock, unlock, or trunk lid open) is input and the ID matches.

A user carries the key and pushes a lock switch signal for the outside door handle.

A door is locked or unlocked using the mechanical key.

2) Key Battery and Vehicle Battery Saving Function

In the smart key system, if the key is constantly located within the vehicle exterior actuation area of the doors, the system will maintain periodic communication with the key. Therefore, if the vehicle remains parked in that state for a long time, the key battery and the vehicle battery could be drained.
For this reason, if this state continues longer than 10 minutes, the smart key system automatically becomes deactivated.

▶ Reinstatement Conditions ●

A wireless door lock remote control signal (lock, unlock, or trunk lid open) is input and the ID matches.

A user who has the key in their possession pushes a lock switch signal on an outside handle.

A door is locked or unlocked using the mechanical key.

Key Cancel

Key cancel is operated when certain operations are performed with the vehicle in the following condition:

Power source is OFF.

Driver door is closed.

Driver door is unlocked.

The operation procedure is as follows:

1) Unlock once with the UNLOCK button of the key.
2) Open the driver door within 5 seconds.
3) Unlock twice with the UNLOCK button of the key within 5 seconds.
4) Repeat open △ close twice for the driver door within 30 seconds, and open again.
   (Driver Door: Open △ Close △ Open △ Close △ Open)
5) Unlock twice with the UNLOCK button of the key within 30 seconds.
6) Repeat open △ close once for the driver door within 30 seconds, and open again.
   (Driver Door: Open △ Close △ Open)
7) Close the driver door within 5 seconds.

When key cancel is activated, the wireless door lock buzzer sounds once.
To return to the original condition, perform the procedures again. When key cancel is returned, the wireless door lock buzzer sounds twice.

Key Code Registration Function

The table below shows the four special coded ID registration function modes through which up to four different codes can be registered. The codes are electronically registered (written to and stored) in the EEPROM. For details of the recognition code registration procedure, refer to the 2007 Camry Repair Manual (Pub. No. RM0250U).

Mode	Function
Rewrite	Erases all previously registered codes and registers only the newly received codes. This mode is used whenever a transmitter or the integration relay is replaced.
Add	Adds a newly received code while preserving previously registered codes. This mode is used when adding a new transmitter. If the number of codes exceeds 4, the oldest registered code is erased first.
Confirm	Confirms how many codes are currently registered. When adding a new code, this mode is used to check how many codes already exist.
Prohibit	To delete all the registered codes and to prohibit the wireless door lock function. This mode is used when a transmitter (key) is lost.

THEFT DETERRENT SYSTEM

▪ DESCRIPTION

The theft deterrent system sounds an alarm when any of the following activates are detected:

- The vehicle being forcibly entered.
- The engine hood or trunk lid being opened.
- Any door or trunk lid being unlocked without key.
- The battery terminals are removed and reconnected.

The system consists of door lock control system parts, wireless door lock remote control system parts, smart key system parts, the security horn and the security indicator light.

This system is controlled by the certification ECU on models with the smart key system and by the main body ECU on models without the smart key system.

The warning methods and timing of the system are listed below.

Warning Method	Interior Light	Illuminates
	Hazard Light	Flashing
	Headlight	Flashing
	Taillight	Flashing
	Vehicle Horn	Sound (approx. 0.4 second cycles)
	Security Horn	Sound (approx. 0.4 second cycles)
	Door Lock Motor	Locking
Warning Time		60 seconds

▪ SYSTEM DIAGRAM

▶ Models With Smart Key System ●

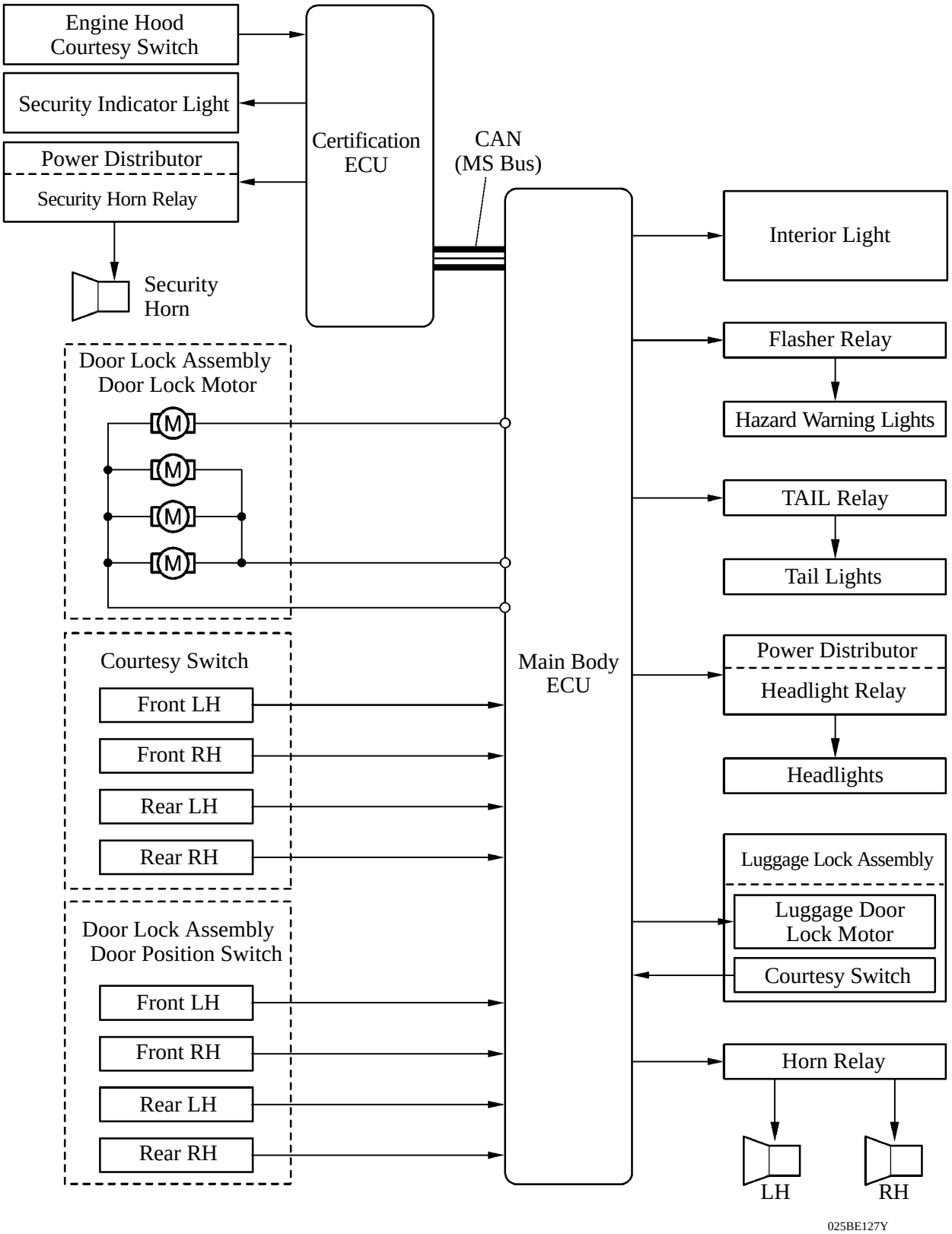

▶ **Models Without Smart Key System ●**

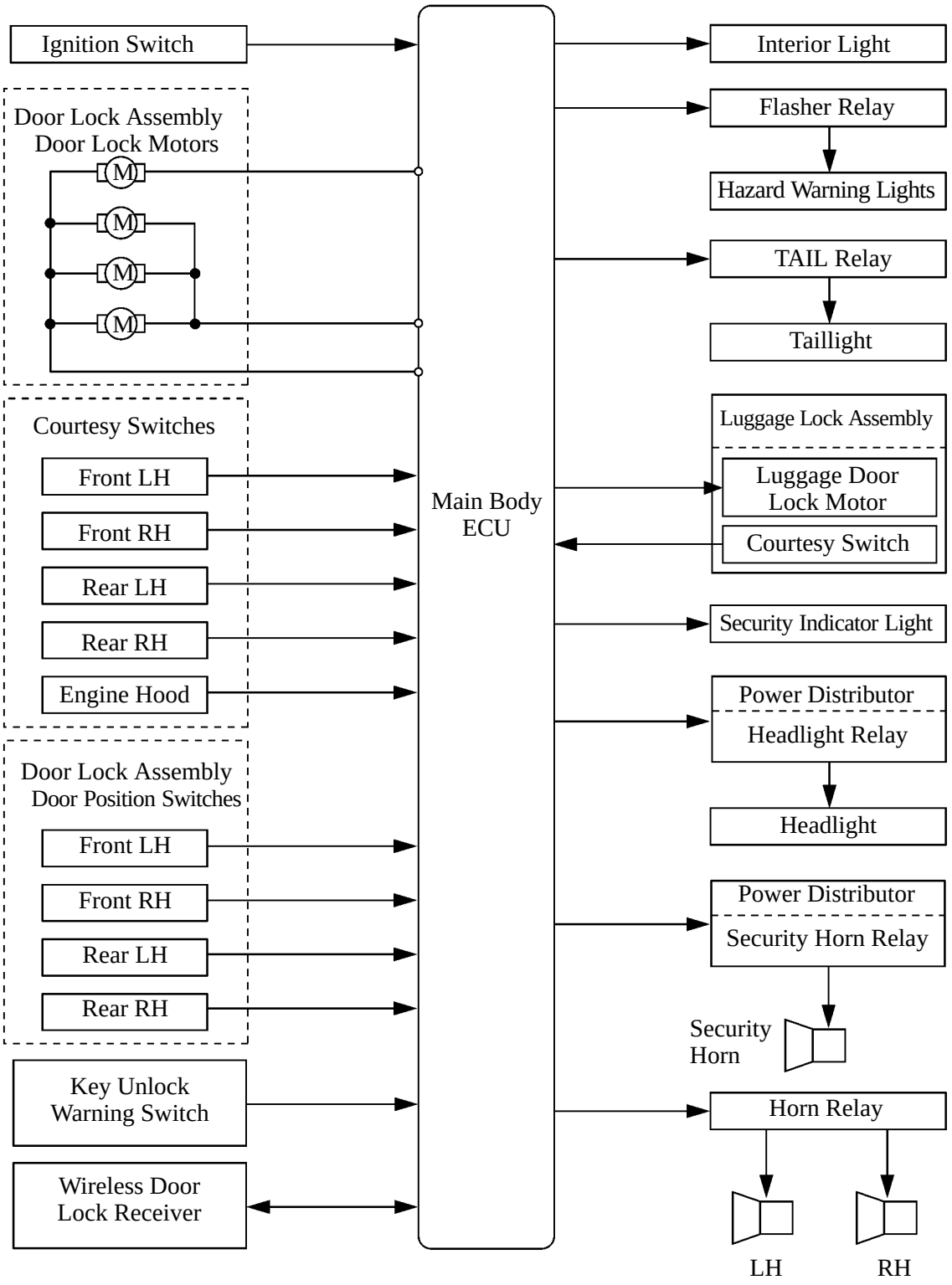

025BE105P

▪ LAYOUT OF MAIN COMPONENTS

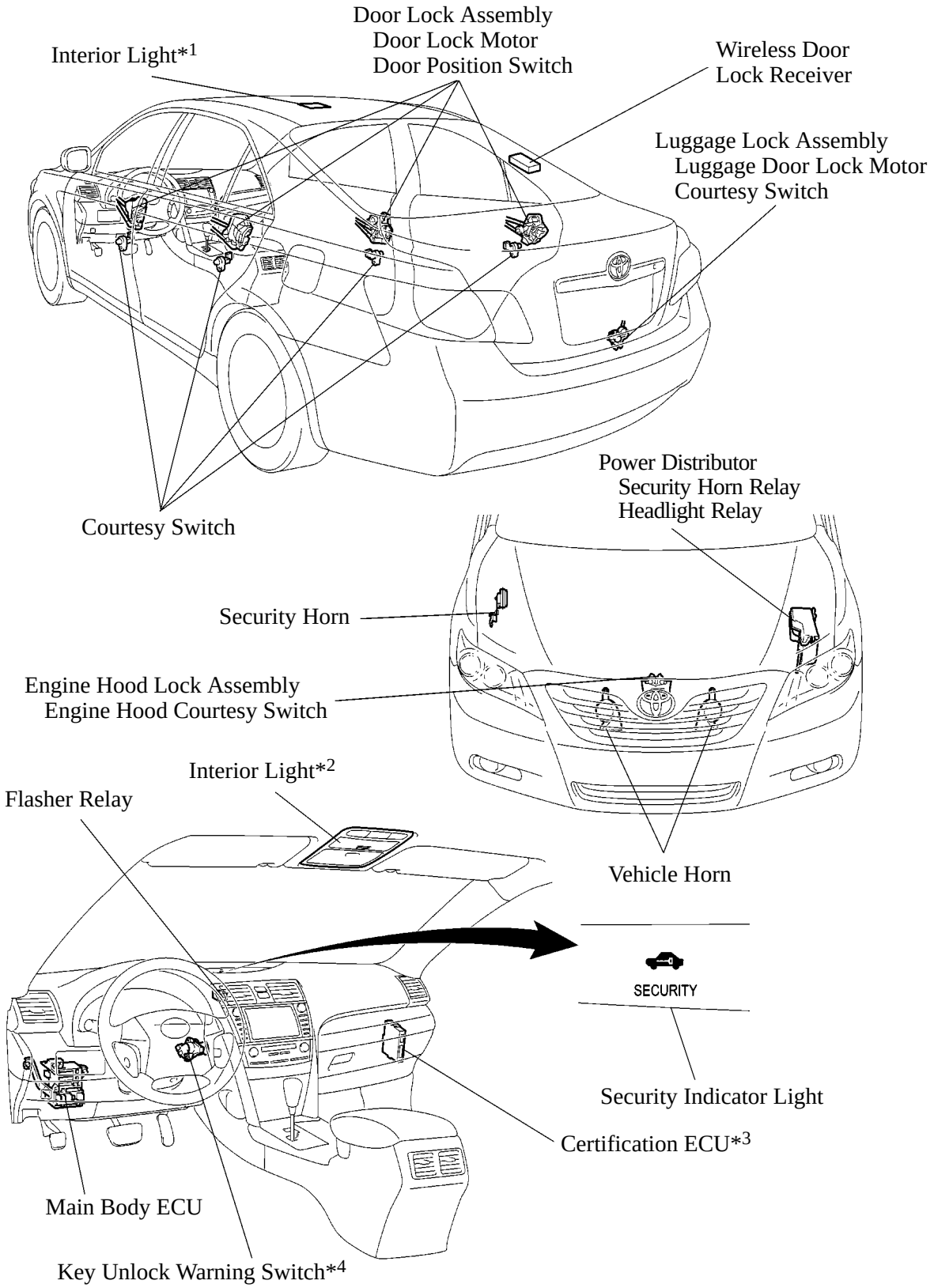

*1: Models without sliding roof system
*2: Models with sliding roof system
*3: Models with smart key system
*4: Models without smart key system

025BE106TE

▪ FUNCTION

The theft deterrent system has the following function:

Function	Outline
Alarm	When the theft deterrent system is enters the alarm state, the warning items (interior light, headlights, taillights, hazard warning lights and security horn) are operated for approximately 60 seconds.
Vehicle Horn Alarm	When the theft deterrent system is enters the alarm state, the vehicle horn is operated for approximately 60 seconds.
Alarm Indicator	When the state of the theft deterrent system enters the armed preparation or alarm state, the security indicator light is illuminated to inform the user. This indicator is also the engine immobilizer indicator, it blinks when the engine immobilizer is in an engaged state.
Forced Door Lock	The main body ECU transmits a door lock signal to all the doors when all the following conditions are satisfied. The theft deterrent system is in the alarm state. There is no key inserted in the ignition key cylinder.*1 Key is not in the actuation area.*2 One of the front doors has been unlocked. The function stops when one of the following conditions is met. All doors are locked. (lock function of door lock or transmitter is operated). The warning ends after approximately 60 seconds. The ignition key is inserted in the ignition key cylinder.*1 Key is in the actuation area.*2
Alarm Memory	In order to inform the user that the theft deterrent system had entered the alarm state, the main body ECU will illuminate the taillights for 2 seconds when the system is switched to the disarmed state.
Panic Control	When the PANIC button of the transmitter or key is pressed, the main body ECU operates the alarm function.
Passive Mode	When the user forgets to lock the doors, the theft deterrent system operates to lock them. (When the user closes all the doors, the theft deterrent system operates to lock all the doors after a delay.)

*1: Models without smart key system
*2: Models with smart key system

▪ SYSTEM OPERATION

The states of the theft deterrent system are as follows:

State	Description	Theft detection
Disarmed State	The theft deterrent system is not set by the user.	—
Armed Preparation State	The standby state before the theft deterrent system activates when the system has already set.	—
Armed State	The theft deterrent system is being activated. (Theft can be detected.)	
Alarm State	Theft has been detected and the warning operation activates.	

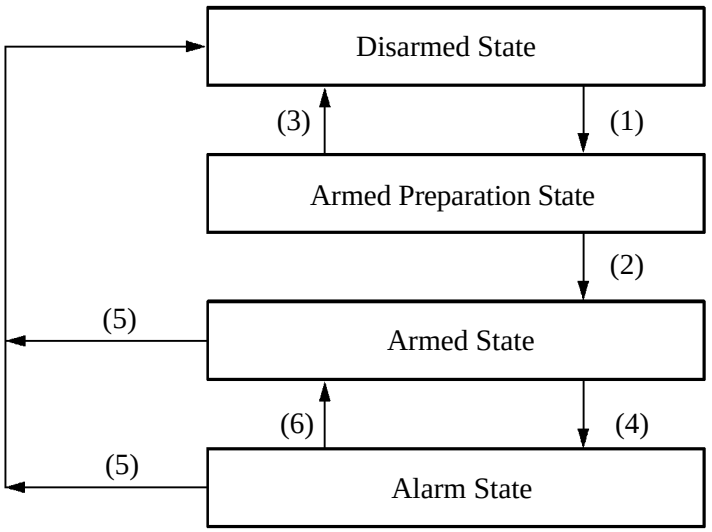

187BE40

The theft deterrent system activates as described in the diagram below when one of items in the chart occurs in order to cause the system to enter the respective state.

Condition	Item
(1)	There is no ignition key in the ignition key cylinder.*1 Key is in the actuation area.*2 All doors, engine hood and trunk lid are closed. All doors are locked using the transmitter lock button, the smart key system, or mechanical key.
(2)	The system state is switched when the doors, engine hood, and trunk lid are all closed and locked, and 30 seconds have elapsed.
(3)	The system state is switched when one of the following conditions is met. Any door, engine hood, or trunk lid is opened. Any door is unlocked. The ignition key is inserted in the ignition key cylinder.*1 The engine switch is pushed.*2 A terminal is disconnected from the battery and reconnected.

*1: Models without smart key system
*2: Models with smart key system

(Continued)

Condition	Item
(4)	The system state is switched when one of the following conditions is met. With all doors closed, any door is opened. With all doors locked, any door is unlocked by a method other than the mechanical key or transmitter. The trunk lid and engine hood are opened by a method other than the mechanical key or transmitter. A terminal is disconnected from the battery and reconnected.
(5)	The system state is switched when one of the following conditions is met. Any door is unlocked with the mechanical key or transmitter. The trunk lid is opened with the mechanical key or transmitter. The power source* is changed to IG-ON.
(6)	After 60 seconds, the alarm stops sounding and the system returns to the armed state.

*: Power source conditions can be changed by pressing the engine switch on models with the smart key system and by operating the ignition switch on models without the smart key system.

ENGINE IMMOBILIZER SYSTEM

●DESCRIPTION

The engine immobilizer system compares the ID code that is registered in the transponder key ECU with the ID code of the transponder chip that is embedded in the ignition key. The system unsets if these ID codes match. Thus, the transponder key ECU and the ECM communicate with each other to authorize fuel injection and ignition, enabling the engine to start.

▶The system is standard equipment on models without the smart key system.

▶An engine immobilizer function is provided on models with the smart key system. For details, see page BE-89.

Service Tip

When replacing the transponder key ECU or making a new ignition key, and the key's recognition code must be registered.

▶When the transponder key ECU has been replaced, the automatic registration mode begins. At this time, the total number of keys that can be registered is three (master key: two, sub key: one).

▶The recognition code of additional keys must be registered. At this time, the total number of keys that can be registered is eight (master key: five, sub key: three).

For details, see the 2007 Camry Repair Manual (Pub. No. RM0250U).

SRS AIRBAG SYSTEM

●DESCRIPTION

1. General

▶The driver and front passenger dual-stage SRS (Supplemental Restraint System) airbags supplement the seat belts to help to reduce the shocks to the head and chest of the driver and front passenger in the event of a frontal collision.

▶The SRS side and curtain shield airbags help to reduce the shocks to the head and chest of the driver, the front passenger in the event of a side collision.

▶The SRS knee airbags help restrain the lower parts of the bodies of the driver, thus enhancing the excellent passenger protection provided by the seat belts and front airbags.

▶A front passenger occupant classification system is used. This enables/disables the front passenger airbag and front passenger side airbag by determining whether or not there is a front passenger seat occupant, and whether it is an adult or child (or child seat), based on the load applied to the passenger seat and the fitted condition of the front passenger seat belt.

▶The front passenger airbag door is designed to be invisible. This means that when the airbag inflates, the instrument panel will split along the cleavage line.

▶The function of the airbag sensor assembly is to memorize the driver seat belt wearing condition while the airbag is inflating.

▶A fuel cut control that stops the fuel pump when any airbags are deployed, is used. For details, see page EG-58.

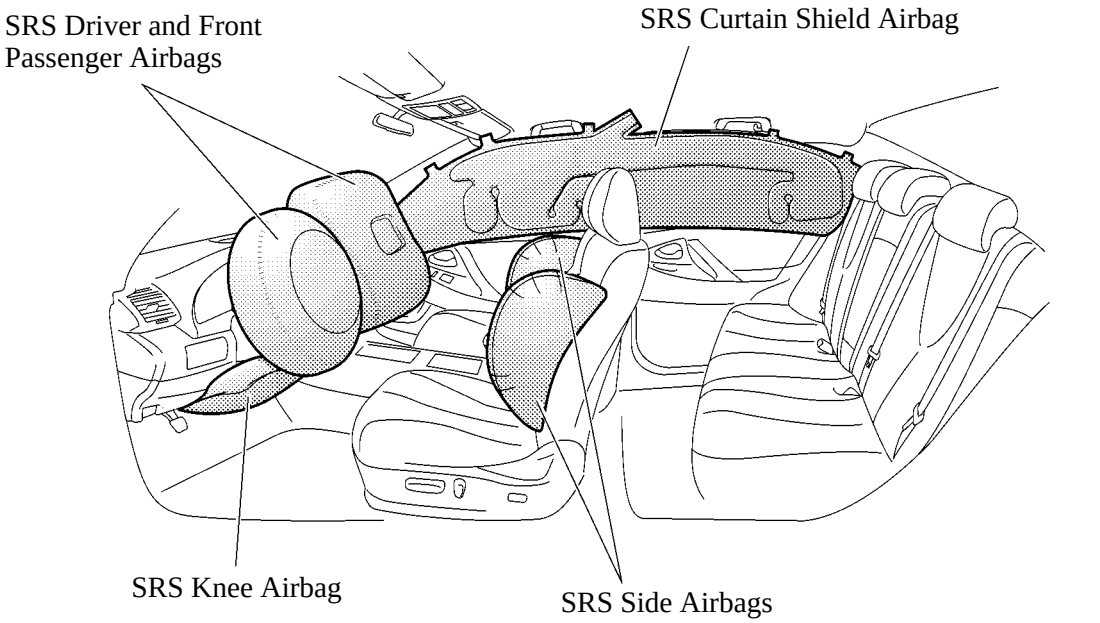

025BE107TE

●LAYOUT OF MAIN COMPONENTS

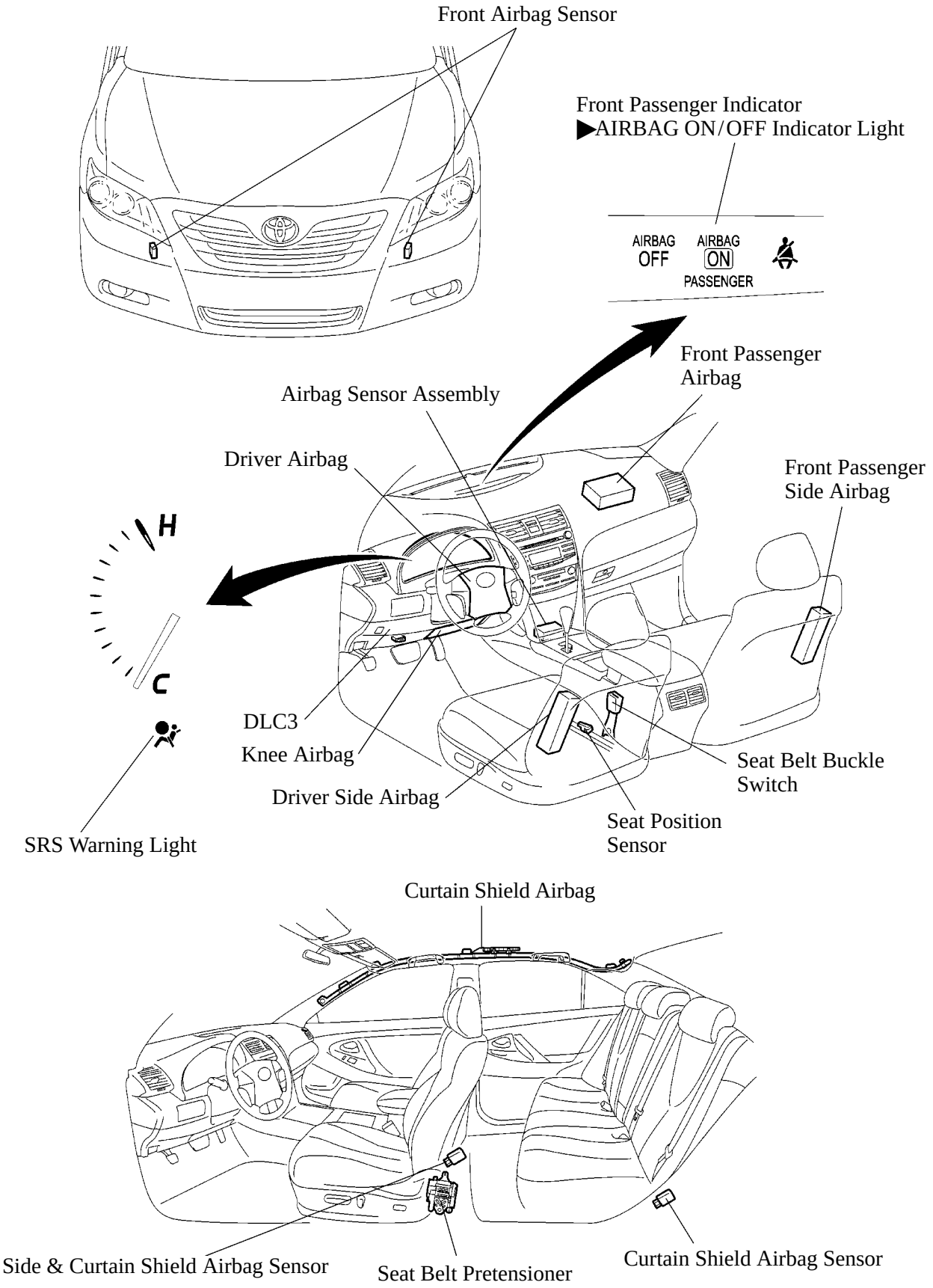

025BE108TE

●WIRING DIAGRAM

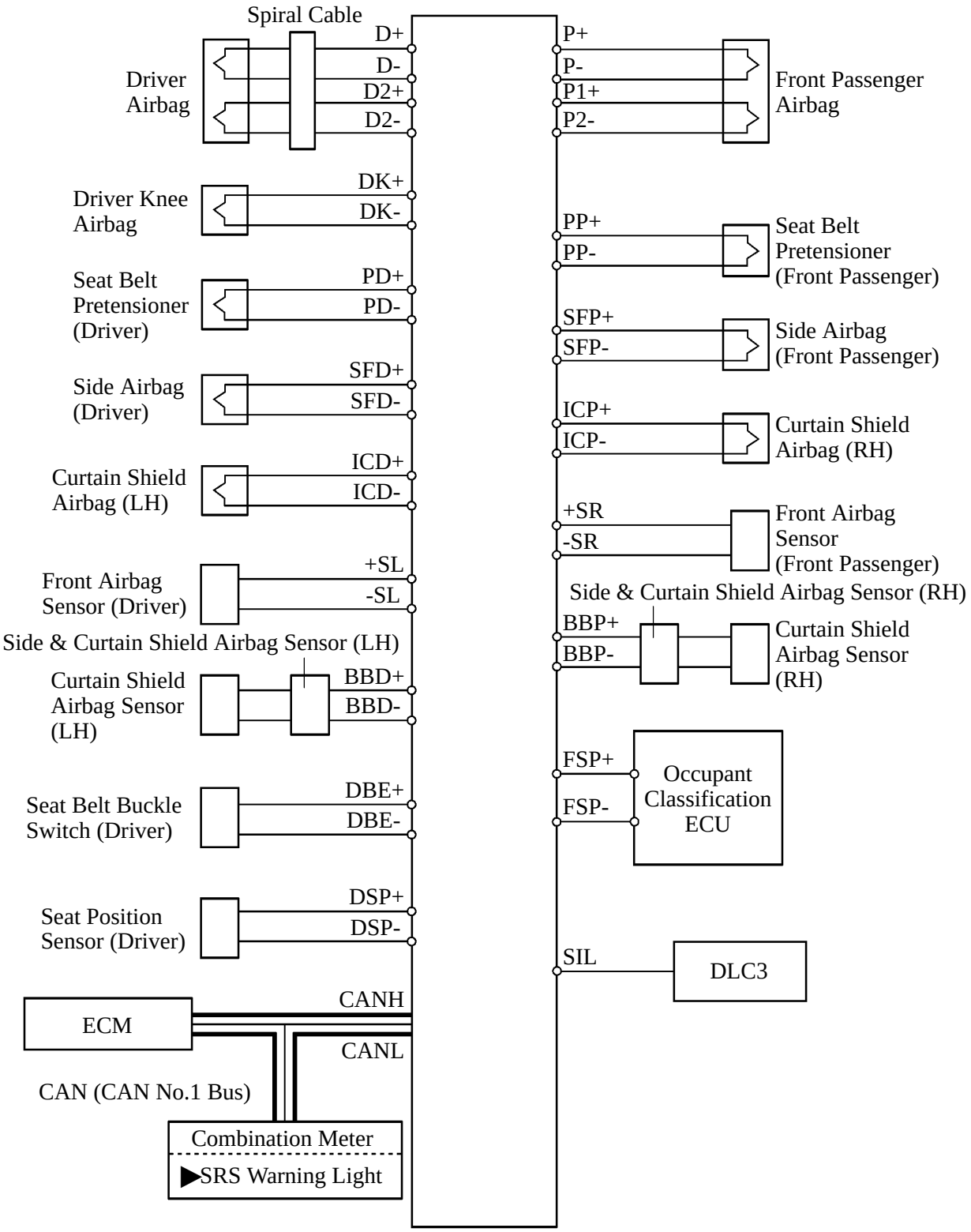

■AIRBAG FOR FRONTAL COLLISION

1. General

▶In conjunction with their impact absorbing structure for frontal collisions, the driver and front passenger dual-stage SRS airbags and the driver knee airbag deploy simultaneously, and are supplements to the seat belts. The driver and front passenger dual-stage SRS airbags have been designed to help reduce injuries to the head and chest in the event of a frontal collision. The driver knee airbag restrict the lower parts of the occupant's body, thus enhancing the excellent passenger protection provided by the seat belt and front airbag.

▶The deceleration sensor is enclosed in the front airbag sensor. Due to the deceleration of the vehicle during a front collision, a distortion is created in the sensor and converted into an electrical signal. Accordingly, the extent of the initial collision can be detected in detail.

▶ Front Airbag Operation ◀

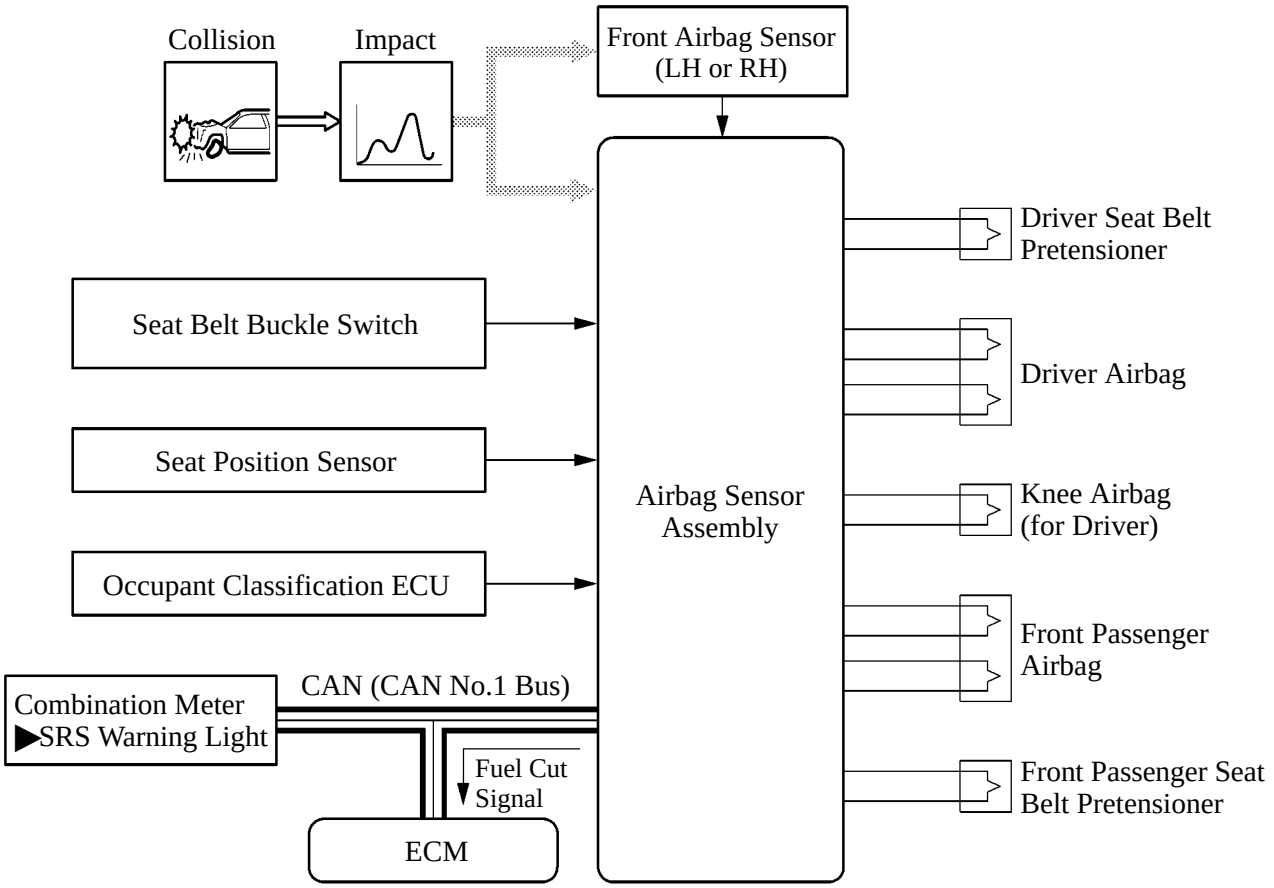

025BE110TE

2. Dual-stage SRS Airbag System

General

In this system, when the front airbag sensors and airbag sensor assembly detect a front collision, the airbag sensor assembly judges the extent of impact, seat position and whether or not the seat belts are fastened, thus optimizing the airbag inflating output by delaying the inflation timing of the 2nd initiator and the 1st initiator.

Seat Position Sensor

1) General

The seat position sensor is mounted on the upper rail portion of the driver seat rail, and includes a Hall IC and a magnet. This sensor is used to detect the sliding position of the driver seat.

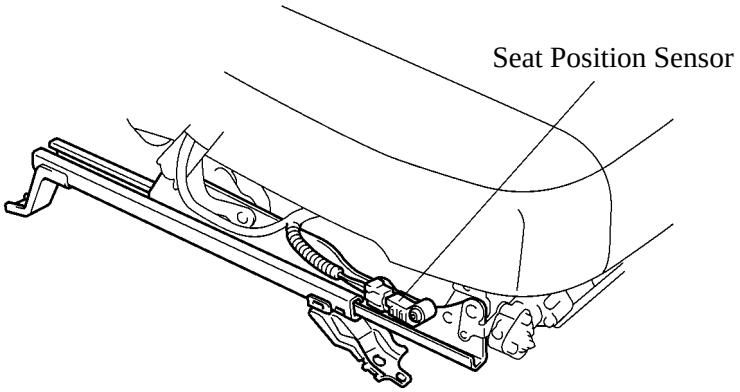

2) Operation

When the seat is in the rearward position, the lower rail portion of the seat rail is close to the seat position sensor. When it is in the forward position, the distance between the lower rail portion and the sensor becomes larger.
Thus, the magnetic flux of the magnet inside the seat position sensor varies depending on the seat position. The Hall IC detects this variation and outputs signals to the airbag sensor assembly.

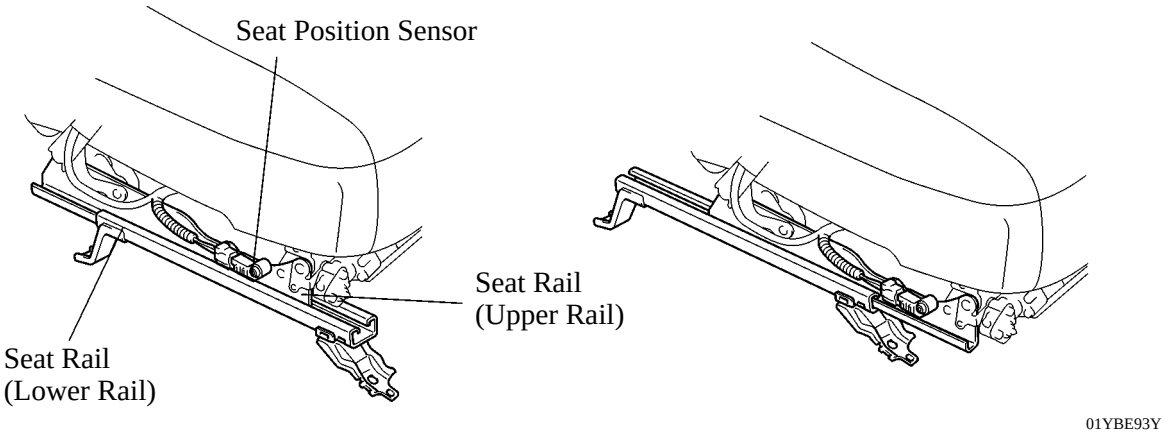

Seat position is rearward **Seat position is forward**

Service Tip

Follow the procedure indicated below to install the seat position sensor.

1) Insert a 1.5 mm (0.06 in.) feeler gauge between the seat position sensor and the lower rail portion.
2) Tighten the mounting bolt to the specified torque with the seat position sensor pushed down as shown.

For details, see the 2007 Camry Repair Manual (Pub. No. RM0250U).

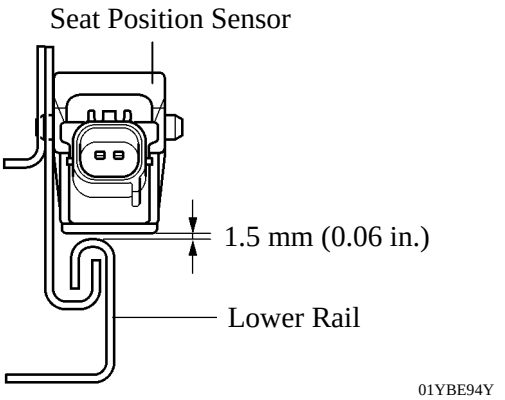

Seat Belt Buckle Switch

The seat belt buckle switch detects whether or not the seat belt is fastened.

▶ The non-contact type switch is composed of a Hall IC and two magnets, installed into the front seat inner belt assembly.

▶ The ejector inside the front seat inner belt assembly and the plate installed to the ejector move when the seat belt is removed or inserted. The movement of the plate changes the magnetic flux density of the magnet.

▶ The Hall IC detects the changes in the magnetic flux density in accordance with the seat belt removal or insertion, and outputs a signal to the airbag sensor assembly (for driver seat) and occupant classification ECU (for front passenger seat).

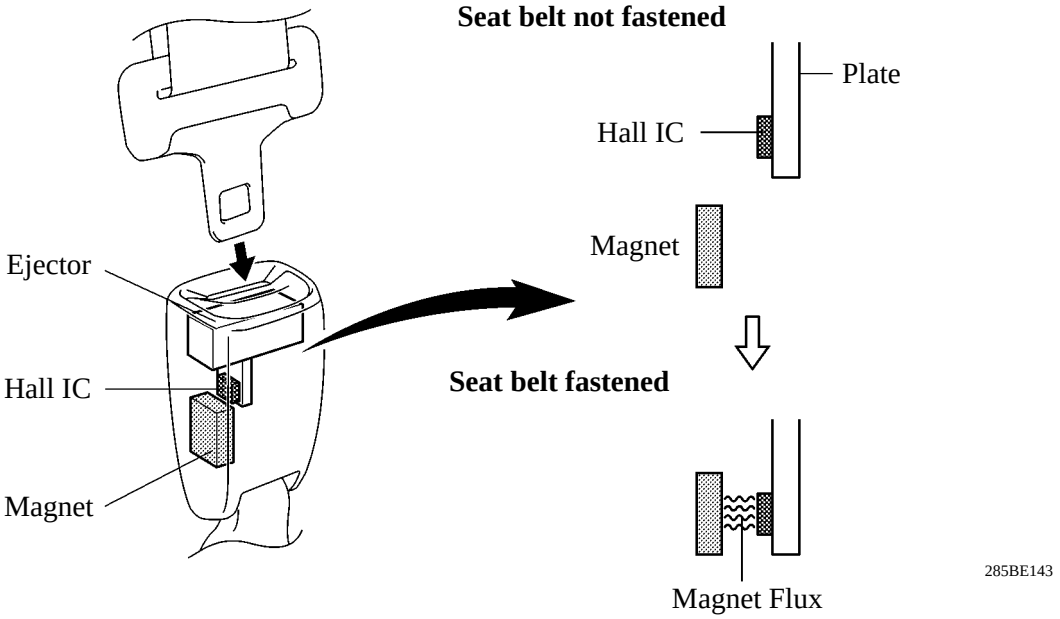

3. SRS Driver and Front Passenger Airbags

SRS driver and front passenger airbags contain two sets of initiators and propellants. The airbag sensor assembly helps optimize the airbag inflation speed by controlling the inflation timing of these initiators.

4. Front Airbag Sensor

Front airbag sensor uses an electrical type deceleration sensor. Based on the deceleration of the vehicle during a frontal collision, distortion is created in the sensor and converted into an electrical signal. Accordingly, the extent of the initial collision can be accurately detected.

5. SRS Knee Airbag

The knee airbag deploys simultaneously with the front airbag in a frontal collision. With the deployment of the knee airbag, the driver’s lower body is restricted, thus enhancing the excellent passenger protection provided by the seat belt and front airbag.

■AIRBAG FOR SIDE/REAR OF SIDE COLLISION

1. General

▶With the airbag for side collisions, if the side & curtain shield airbag sensor detects an impact, the airbag sensor assembly causes the front side and curtain shield airbags to be deployed simultaneously.

▶With the airbag for rear of side collisions, if the curtain shield airbag sensor detects an impact, the airbag sensor assembly causes the curtain shield airbag to be deployed.

▶ System Operation ◀

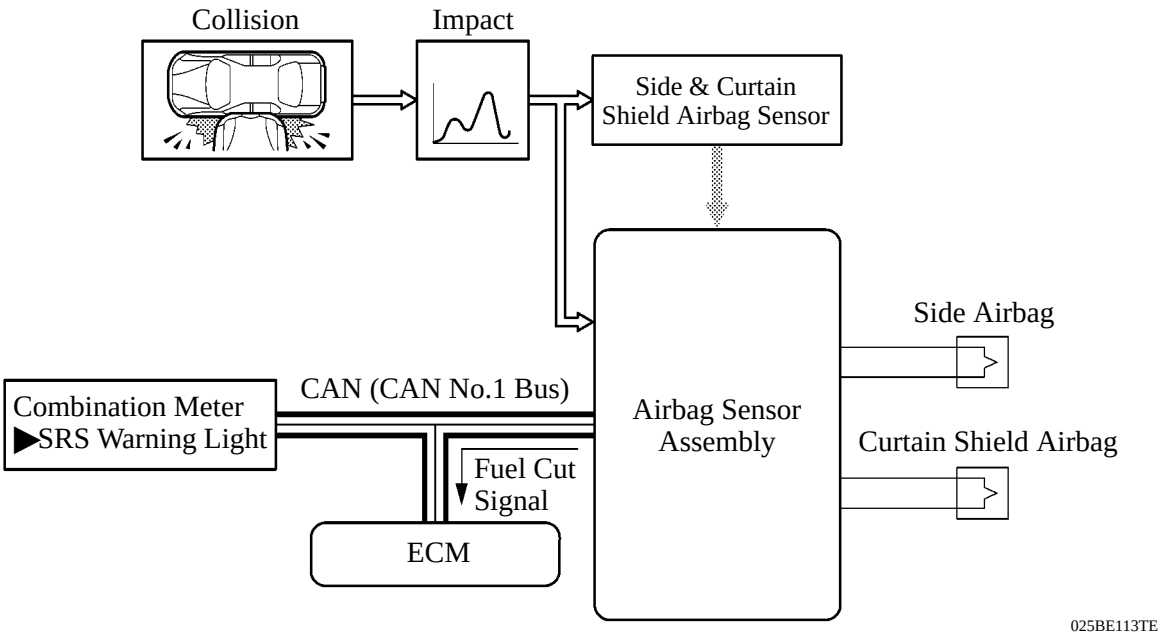

Airbags for Side Collision

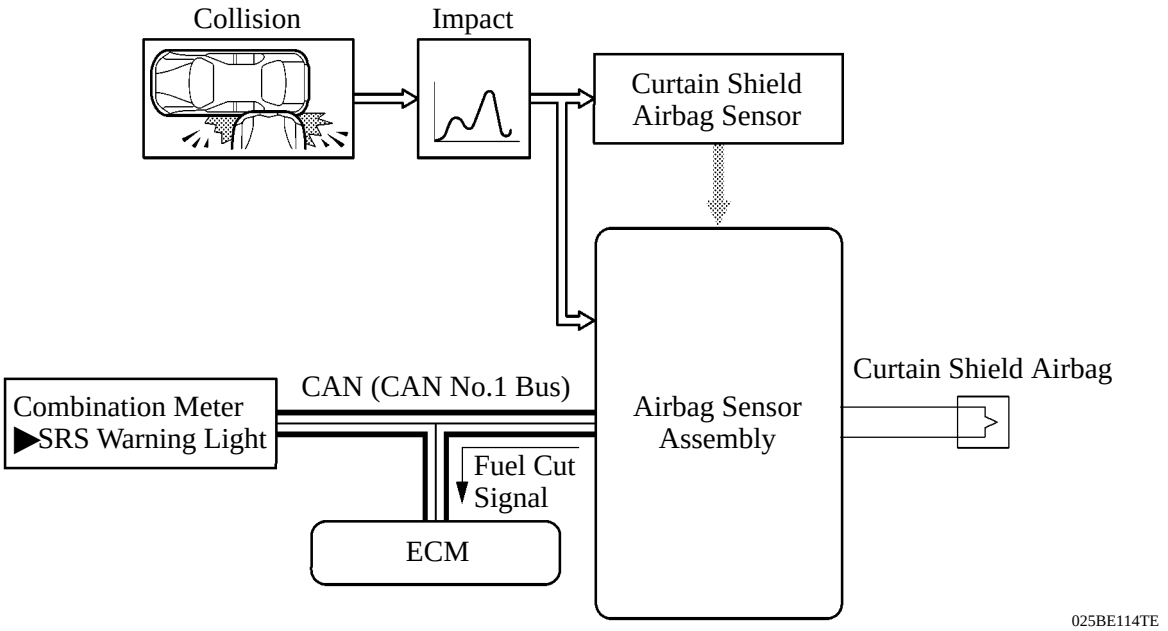

Airbag for Rear of Side Collision

2. SRS Side Airbag

SRS side airbags are installed in the backs of the driver seat and the front passenger seat. The SRS airbag is a one-piece design, consisting of an inflator, a bag, and a cover.

3. SRS Curtain Shield Airbag

SRS curtain shield airbags are located in the areas that extend from the driver's and front passenger's front pillars to the rear pillars in the rear seat areas. Each SRS airbag is a one-piece design, consisting of an inflator, a bag, and a cover.

4. Side & Curtain Shield and Curtain Shield Airbag Sensors

Side & curtain shield airbag sensor uses an electrical type deceleration sensor. Based on the deceleration of the vehicle during a side or rear of side collision, distortion is created in the sensor and converted into an electrical signal. Accordingly, the extent of the initial collision can be accurately detected.

■FRONT PASSENGER OCCUPANT CLASSIFICATION SYSTEM

1. General

The front passenger occupant classification system judges whether the front passenger seat is occupied by an adult or child (with child seat) or is unoccupied, in accordance with the load that is applied to the front passenger seat and whether the seat belt is buckled. Thus, it restricts the deployment of the front passenger airbag, front passenger side airbag, and the front passenger seat belt pretensioner. In addition, the system informs the driver of the result of the judgment through the use of the AIRBAG ON/OFF indicator lights.

▶This system consists of the occupant classification ECU, four occupant classification sensors, “AIRBAG ON/OFF indicator lights”, seat belt buckle switch, and airbag sensor assembly.

▶ System Diagram ◀

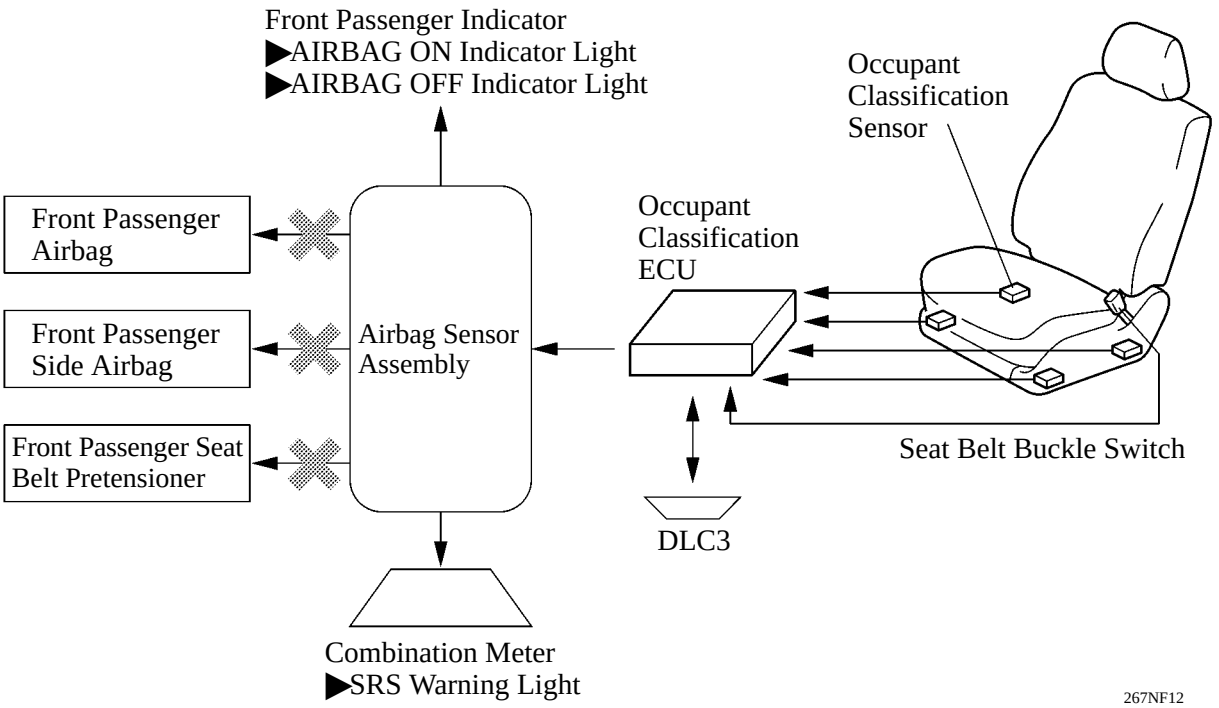

Service Tip

▶When installing items to the front passenger seat or removing/installing the front passenger seat, connect the hand-held tester and be sure to perform a system check and perform a zero-point calibration of the sensor load value.

▶If performing maintenance due to the SRS warning light being on constantly or due to a collision, in addition to the above item, check that the hand-held tester display value indicates within the range of 30 kg (66 lb) +/- 3 kg (6.6 lb) when a 30 kg (66 lb) weight is placed on the front passenger seat.

For details, see the 2007 Camry Repair Manual (Pub. No. RM0250U).

2. Wiring Diagram

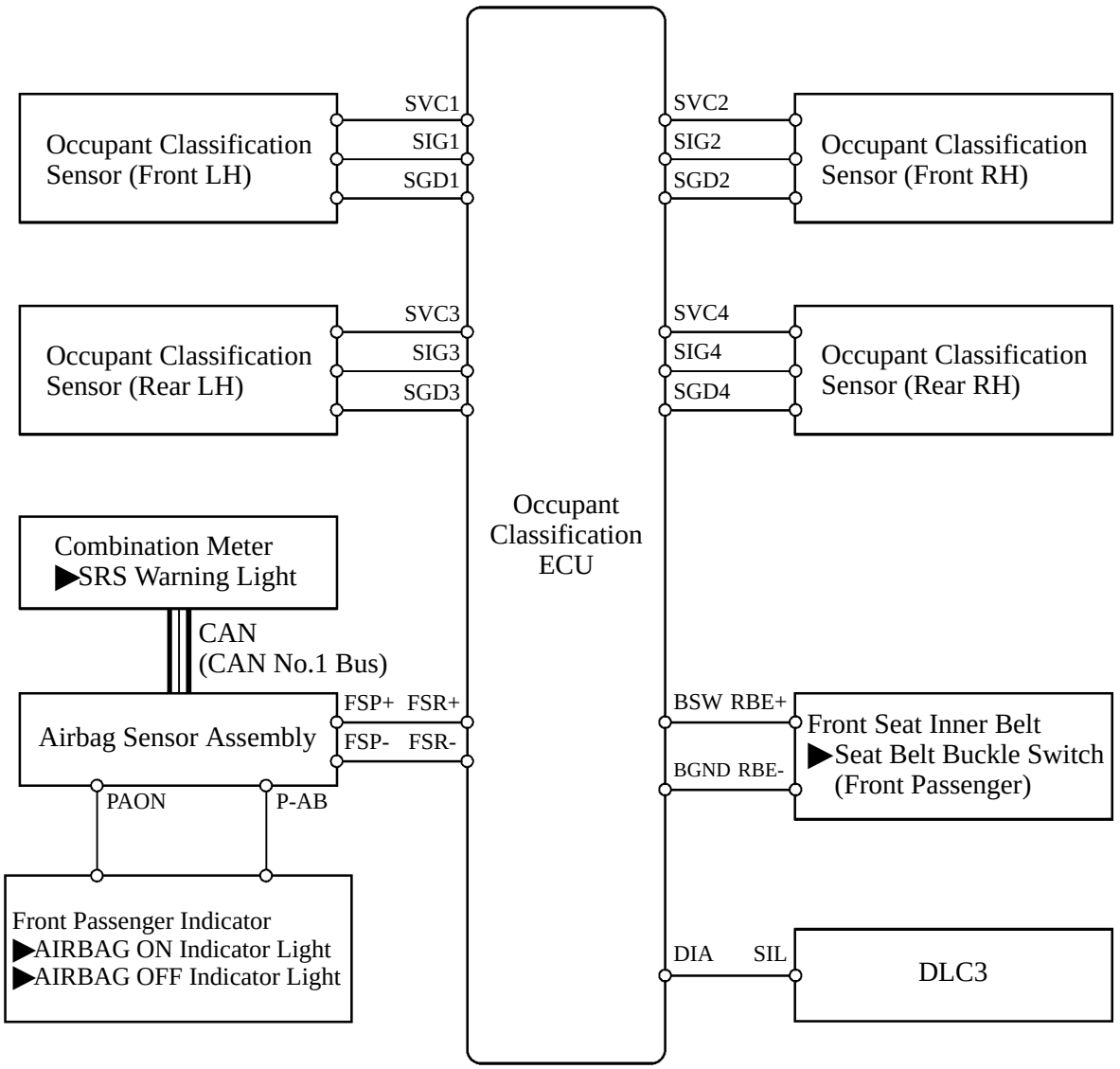

025BE115P

3. Occupant Classification Sensor

The occupant classification sensors are installed on four brackets connecting the seat rail and the seat frame. The resistance values of these sensors, which vary in accordance with the distortion that acts on the brackets, are output to the occupant classification ECU.

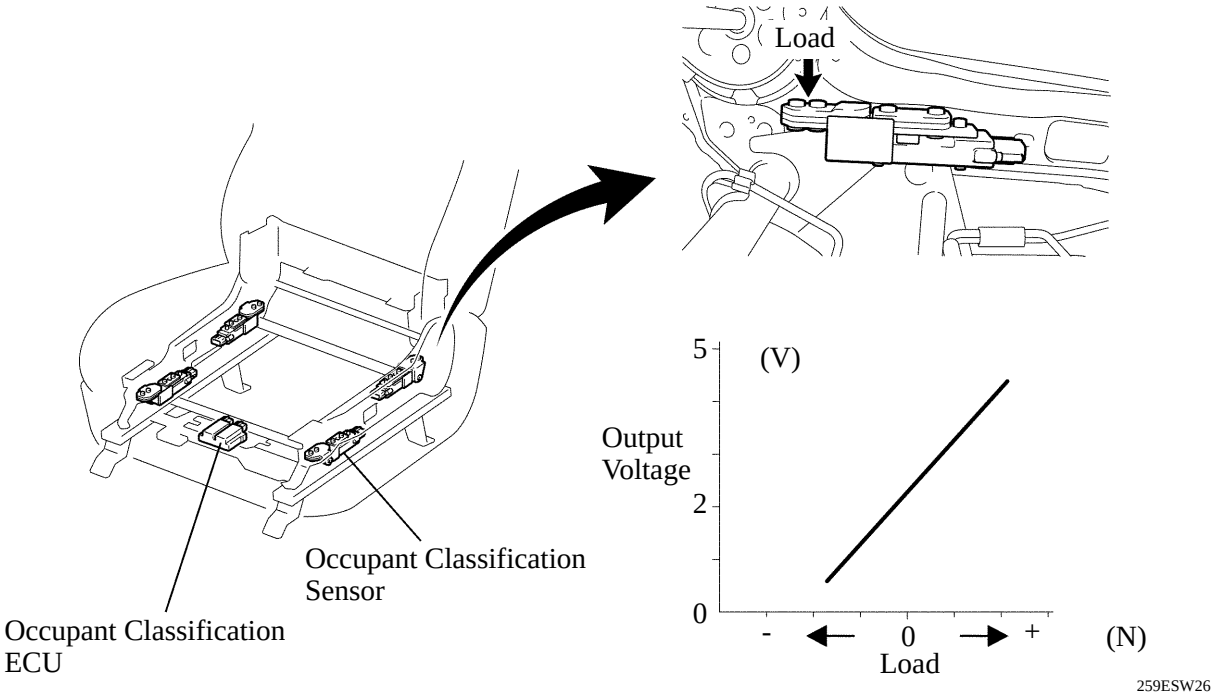

Relation between Output Voltage and Load

4. System Operation

General

This system makes the following judgments: unoccupied judgment, child seat judgment, child judgment, and adult judgment. In addition, it performs an initial check to check the circuit of the AIRBAG ON/OFF indicator lights when the ignition*1/engine*2 switch is ON.

- ▶The occupant classification ECU constantly monitors the weight of the front passenger seat, and makes a judgment in accordance with the signals from the occupant classification sensor and the state of the seat belt buckle switch, regardless of the position of the ignition*1/engine*2 switch.
- ▶The occupant classification ECU contains criteria value A to judge whether the seat is being occupied by a child or a child seat in accordance with the signals from the four occupant classification sensors and seat belt buckle switch, and criteria value B to judge whether the occupant is an adult or child (with child seat).
- ▶The occupant classification ECU makes an occupied or unoccupied judgment in accordance with the signals from the seat belt buckle switch.

Unoccupied Judgment

- ▶The occupant classification ECU makes an unoccupied judgment when the judgment value is lower than criteria value A and the seat belt buckle switch is OFF.
- ▶If the ignition*1/engine*2 switch is turned ON in this state, the system performs an initial check, and does not illuminate the AIRBAG ON/OFF indicator lights. Then, the system prohibits the deployment of the front passenger airbag, front passenger side airbag, and the front passenger seat belt pretensioner, and does not blink the seat belt reminder light.

*1: Models without smart key system
*2: Models with smart key system

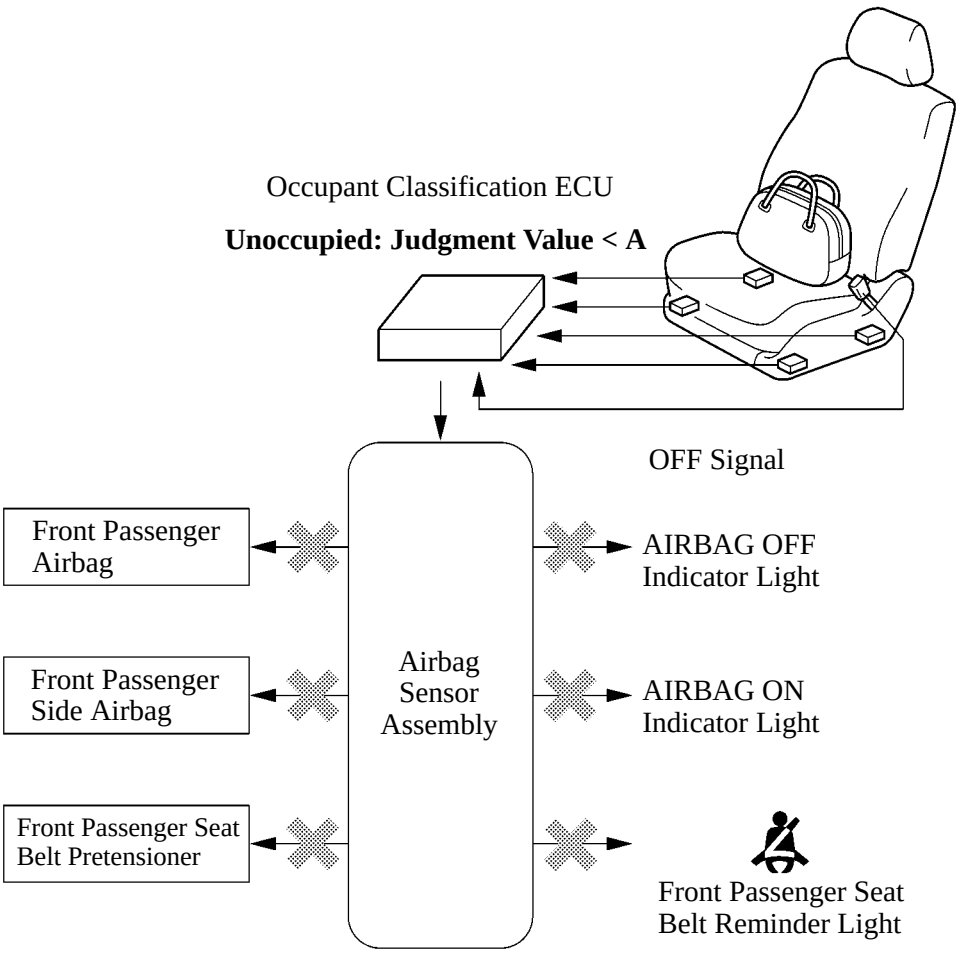

Child Seat or Child Judgment

▶ If the judgment value is lower than criteria value B and the seat belt buckle switch is ON, the occupant classification ECU judges that a child seat is installed.

▶ If the judgment value is higher than criteria value A, but lower than criteria value B, and the seat belt buckle switch is OFF, the occupant classification ECU judges that the seat is being occupied by a child.

▶ When the ignition*1/engine*2 switch is turned ON under these conditions, the system performs an initial check and illuminates the AIRBAG OFF indicator light to indicate that the front passenger airbag and the front passenger side airbag have been deactivated.

*1: Models without smart key system
*2: Models with smart key system

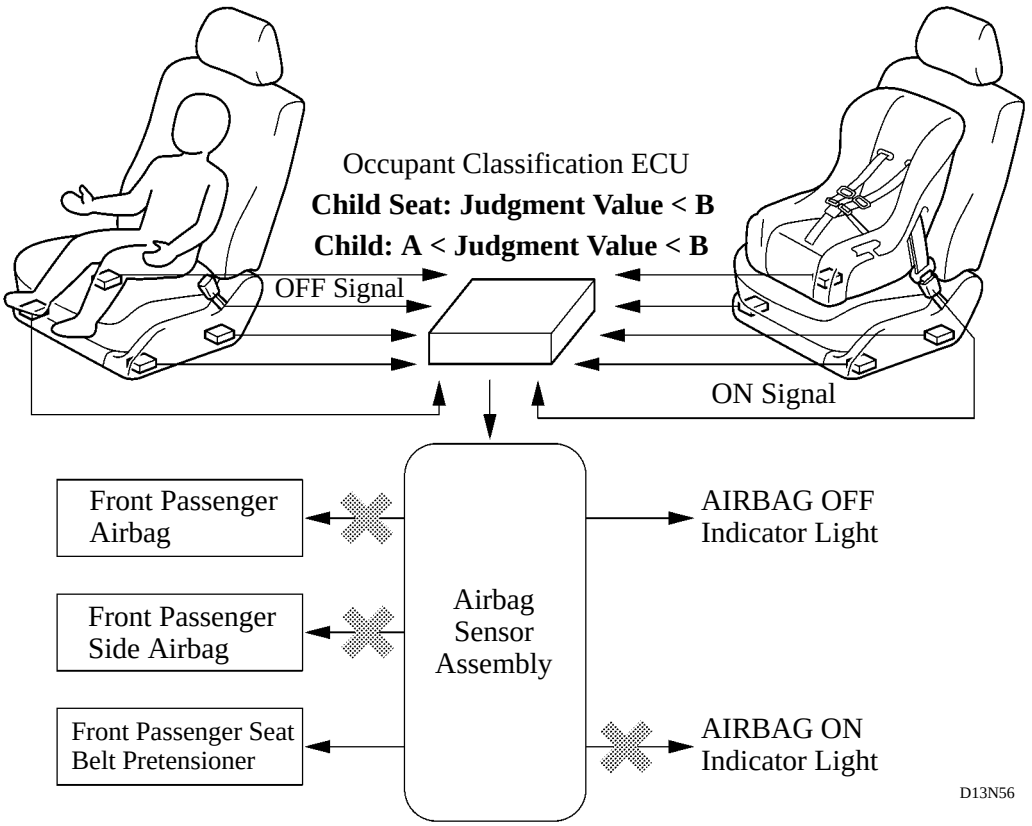

▶ After the occupant classification ECU judges that child seat is installed, the AIRBAG OFF indicator light does not go off unless the seat belt buckle switch is turned OFF.

Adult Judgment

▶ When the judgment value is higher than criteria value B, the occupant classification ECU judges that the seat is being occupied by an adult.

▶ If the ignition*1/engine*2 switch is turned ON in this state, the system performs an initial check and illuminates the AIRBAG ON indicator light, indicating that the front passenger airbag and the front passenger side airbag are active.

*1: Models without smart key system
*2: Models with smart key system

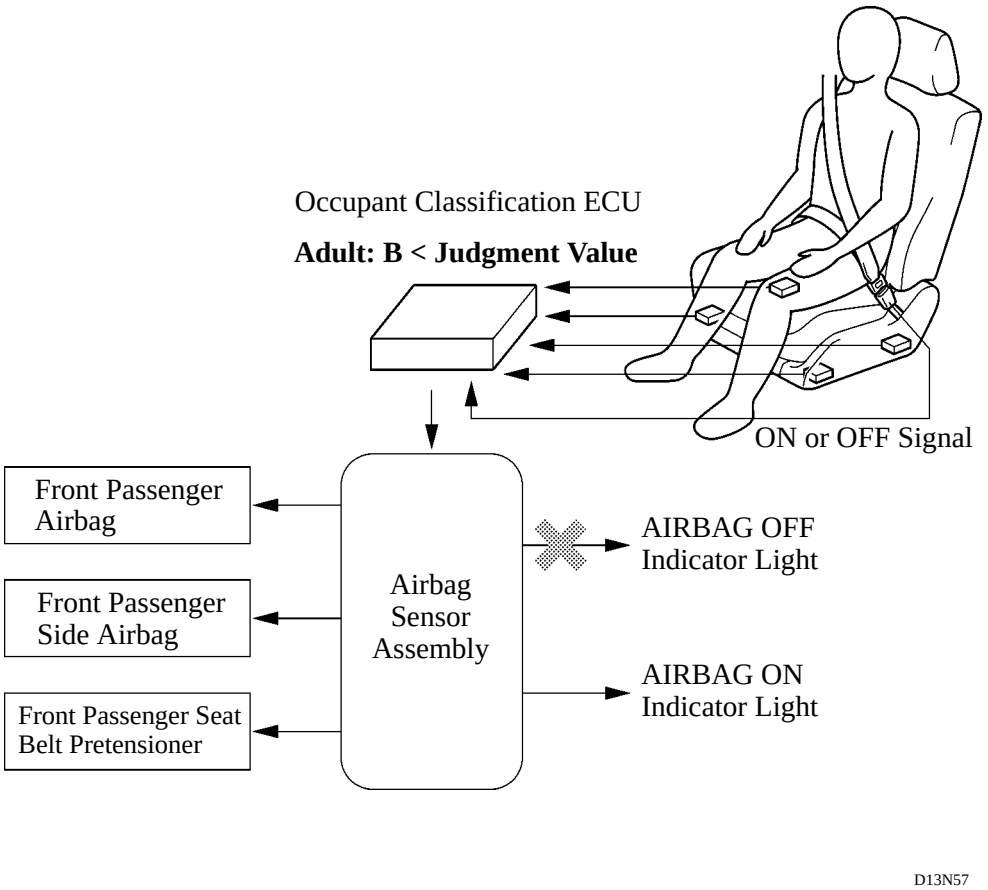

▶ After the occupant classification ECU judges that the occupant is as adult, and if the judgment value is determined as criteria value B or less according to occupant load movement, the ECU continues adult judgment for approximately ten seconds before switching the child judgment.

Initial Check

After the ignition*1/engine*2 switch is tuned ON, the occupant classification ECU lights up the AIRBAG ON/OFF indicator lights via airbag sensor assembly based on the timing chart below in order to check the indicator light circuits.

▶ Timing Chart ◀

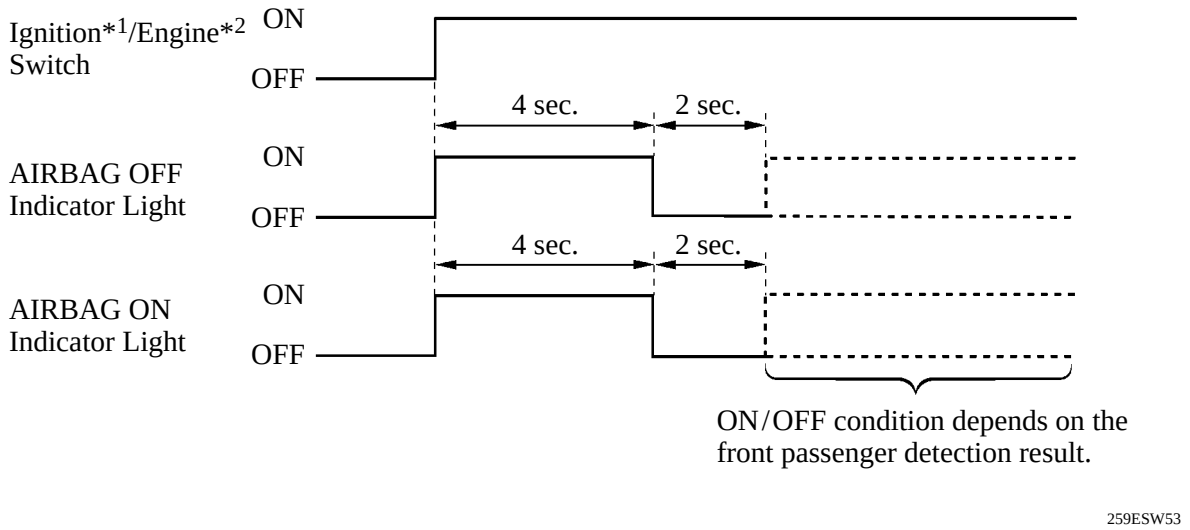

*1: Models without smart key system
*2: Models with smart key system

5. Precaution for Front Passenger Occupant Classification System Operation

To avoid potential death or serious injury when the front passenger occupant classification system does not detect the conditions correctly, observe the following.

▶ Wear the seat belt properly.

▶ Make sure the front passenger's seat belt tab has not been left inserted into the buckle before someone sits in the front passenger seat.

▶ Make sure the AIRBAG ON indicator light is illuminated when using the seat belt extender for the front passenger seat. If the AIRBAG OFF indicator light is illuminated, disconnect the extender tongue from the seat belt buckle, then reconnect the seat belt. Reconnect the seat belt extender after making sure the AIRBAG ON indicator light is illuminated. If you use the seat belt extender while the AIRBAG OFF indicator light is illuminated, the front passenger airbag and side airbag on the front passenger side may not activate correctly, which could cause death or serious injury in the event of collision.

▶ Do not put a heavy load in the front passenger seatback pocket or attach a seatback table to the front passenger seat seatback.

▶ Do not put weight on the front passenger seat by putting your hands or feet on the front passenger seat seatback from the rear passenger seat.

▶ Do not let a rear passenger lift the front passenger seat with their feet or press on the seatback with their legs.

▶ Do not put objects under the front passenger seat.

▶ Do not recline the front passenger seat seatback so far that it touches a rear seat. This may cause the AIRBAG OFF indicator light to be illuminated, which indicates that the passenger's airbags will not deploy in the event of a severe accident. If the seatback touches the rear seat, return the seatback to a position where it does not touch the rear seat.
Keep the front passenger seatback as upright as possible when the vehicle is moving. Reclining the seatback excessively may lessen the effectiveness of the seat belt system.

▶ Make sure the AIRBAG ON indicator light may be illuminated when an adult sits in the front passenger seat. If the AIRBAG OFF indicator light is illuminated, ask the passenger to sit properly with back upright and against the seat, with legs comfortably extended and wear the seat belt correctly. Nonetheless, if the AIRBAG OFF indicator light remains illuminated, let the passenger sit in the rear seat. When it is unavoidable to sit in the front passenger seat, ask the passenger to move the seat as far back as possible, remain properly seated.

▶ When it is unavoidable to install the forward-facing child restraint system on the front passenger seat, install the child restraint system on the front passenger seat in the proper order.

▶ Do not kick the front passenger seat or subject it to severe impact. Otherwise, the SRS warning light may come on to indicate a malfunction of the detection system.

▶ Child restraint systems installed on the rear seat should not contact the front seatbacks.

■IMPROPER CONNECTION PREVENTION LOCK MECHANISM

▶This improper connection prevention lock mechanism consists of the airbag sensor assembly and the holder.

▶The airbag sensor assembly has a connector lock pin.

▶The holder has a lever with a lock groove. The holder and the connectors are locked via a retainer and a lance.

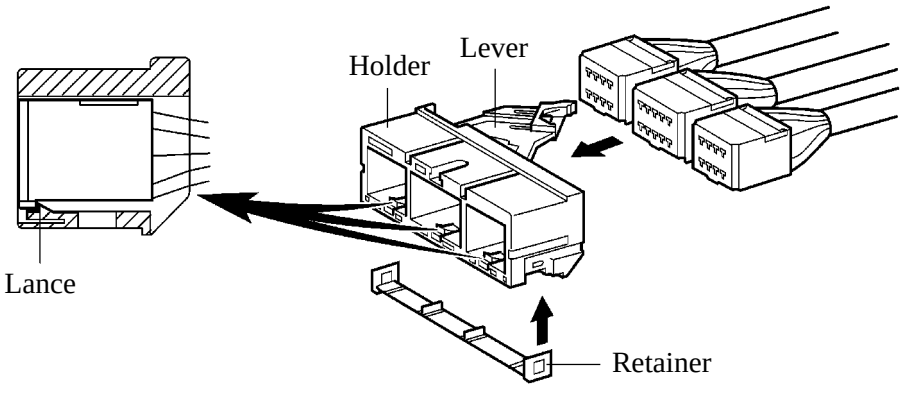

▶When connecting the holder and connectors to the airbag sensor assembly, the lever is pushed into position end by rotating it around the axis of the connector lock pin in order to lock the holder securely.

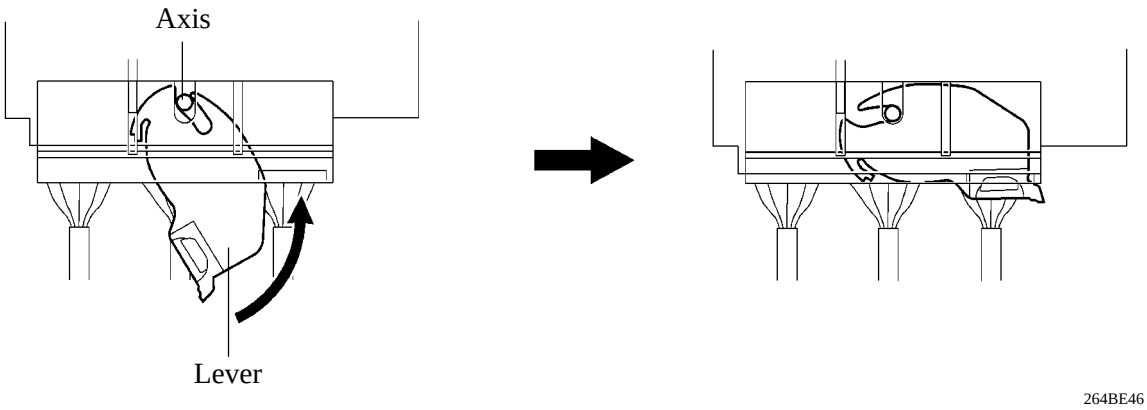

■AIRBAG SENSOR ASSEMBLY

▶It reaches a deploy judgment to deploy the dual stage driver's and front passenger's airbags, driver's knee airbag, and pretensioners based on the signals received from the front airbag sensor and the airbag sensor assembly. In addition, it can reach a deploy judgment to deploy the SRS side airbags and SRS curtain shield airbags based on signals received from the side & curtain shield airbag sensors and curtain shield airbag sensors. Furthermore, it is equipped with a diagnosis function to perform self-diagnosis in case of system malfunctions.

▶Each signal is transmitted as follows:

Target ECU	Signal	Communication path
ECM	Fuel Cut Signal	CAN communication circuit
Combination Meter	SRS Warning Light ON Demand Signal Driver Seat Belt Remainder Light ON Demand Signal	CAN communication circuit

■EDR (EVENT DATA RECORDER)

The airbag sensor assembly monitors and control certain aspects of the vehicle.
These computers assist in driving and maintaining optimal vehicle performance.
Besides storing data useful for troubleshooting, there is a system to record data in a crash or a near car crash event.
This is called the Event Data Recorder (EDR).
The airbag sensor assembly contains the EDR.
In a crash or a near car crash event, this device may record some or all of the following information:

▶Engine speed
▶Whether the brake pedal was applied or not
▶Vehicle speed
▶To what extent the accelerator pedal was depressed
▶Position of the transmission selector lever
▶Whether the driver and front passenger wore seat belts or not
▶Driver's seat position
▶SRS airbag deployment data
▶SRS airbag system diagnostic data

The information above is intended to be used for the purpose of improving vehicle safety performance.
Unlike general data recorders, the EDR does not record sound data such as conversation between passengers.
Toyota will not disclose the data recorded in an EDR to a third party except when:

▶An agreement from the vehicle's owner (or the leasing company for a leased vehicle) is obtained
▶Officially requested by the police or other authorities
▶Used as a defense for Toyota in a law suit
▶Ordered by the court

However, if necessary Toyota will:

▶Use the data for research on Toyota vehicle safety performance
▶Disclose the data to a third party for research purposes without disclosing details of the vehicle owner, and only when it is deemed necessary
▶Disclose summarized data cleared of vehicle identification information to a non-Toyota organization for research purposes

■DIAGNOSIS

If the airbag sensor assembly detects a malfunction in the SRS airbag system, the airbag sensor assembly stores the malfunction data in memory, in addition to illuminating the SRS warning light.

▶There are 2 types of DTC for the SRS airbag system: 5-digit and 2-digit.
▶The 5-digit DTC can be read by connecting a hand-held tester to DLC3.
▶The 2-digit DTC can be read by connecting the SST (09843-18040) to the Tc and CG terminals of the DLC3 and reading the blinking of the SRS warning light.
▶If the SRS airbags deploy, the airbag sensor assembly will turn ON the SRS warning light. However, differing from the ordinary diagnosis function, a DTC will not be memorized. The SRS warning light can be turned OFF only by replacing the airbag sensor assembly with a new one.
▶For details, refer to see the 2007 Camry Repair Manual (RM0250U).

SEAT BELT REMINDER SYSTEM

▪ DESCRIPTION

If a seat belt is not fastened, this system flashes the seat belt reminder light or sounds the buzzer in the combination meter as a reminder.

When the ignition*1/engine*2 switch is turned ON, this system detects the condition of the seat belts based on the signals from the seat belt buckle switches (for the driver and front passenger) and the occupant classification sensor.

*1: Models without smart key system
*2: Models with smart key system

▶ System Diagram ●

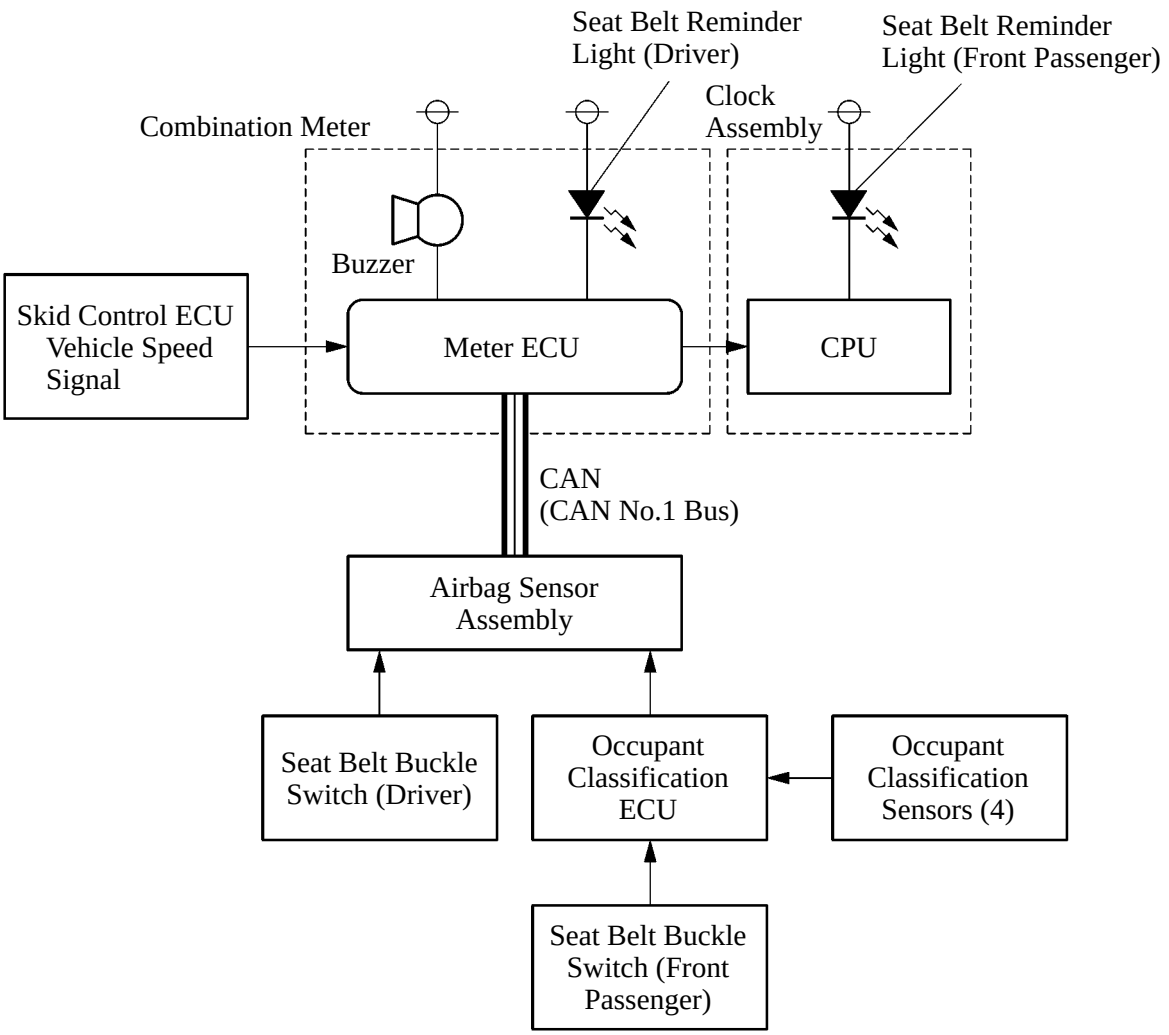

025BE116TE

▪ REMINDER METHOD

The timing chart of the buzzer and details of the reminder method are shown below.

▶ Timing Chart ●

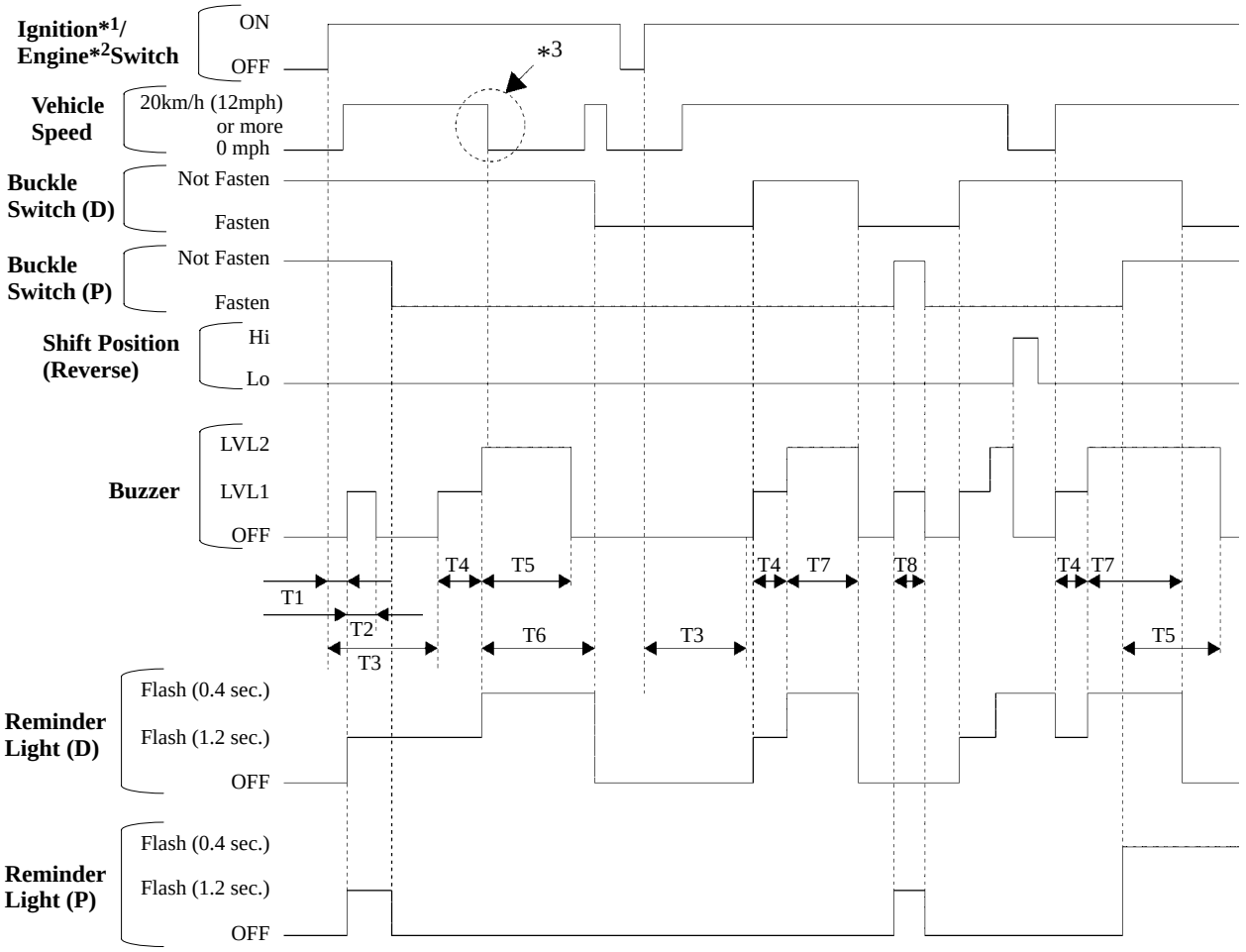

T1: About 1.8 sec.	T5: About 20 sec.
T2: About 1.2 sec. x 5	T6: About 20 sec. or more
T3: About 13.8 sec.	T7: About 20 sec. or less
T4: About 9.6 sec.	T8: About 9.6 sec. or less

*1: Models without smart key system
*2: Models with smart key system
*3: If the vehicle speed drops below the setting level for seat belt warning after a buzzer begins to sound, the buzzer will continue to sound. After the vehicle speed exceeds 20km/h (12 mph) again, the buzzer will stop.

CRUISE CONTROL SYSTEM

▪ DESCRIPTION

The cruise control system is optional equipment on all models.

When the system is set to a desired vehicle speed, the throttle valve position is adjusted automatically to maintain the vehicle speed without the driver having to depress the accelerator pedal.

This system effects control through the ETCS-i (Electronic Throttle Control System-intelligent).

▶ Models With U660E Automatic Transaxle ●

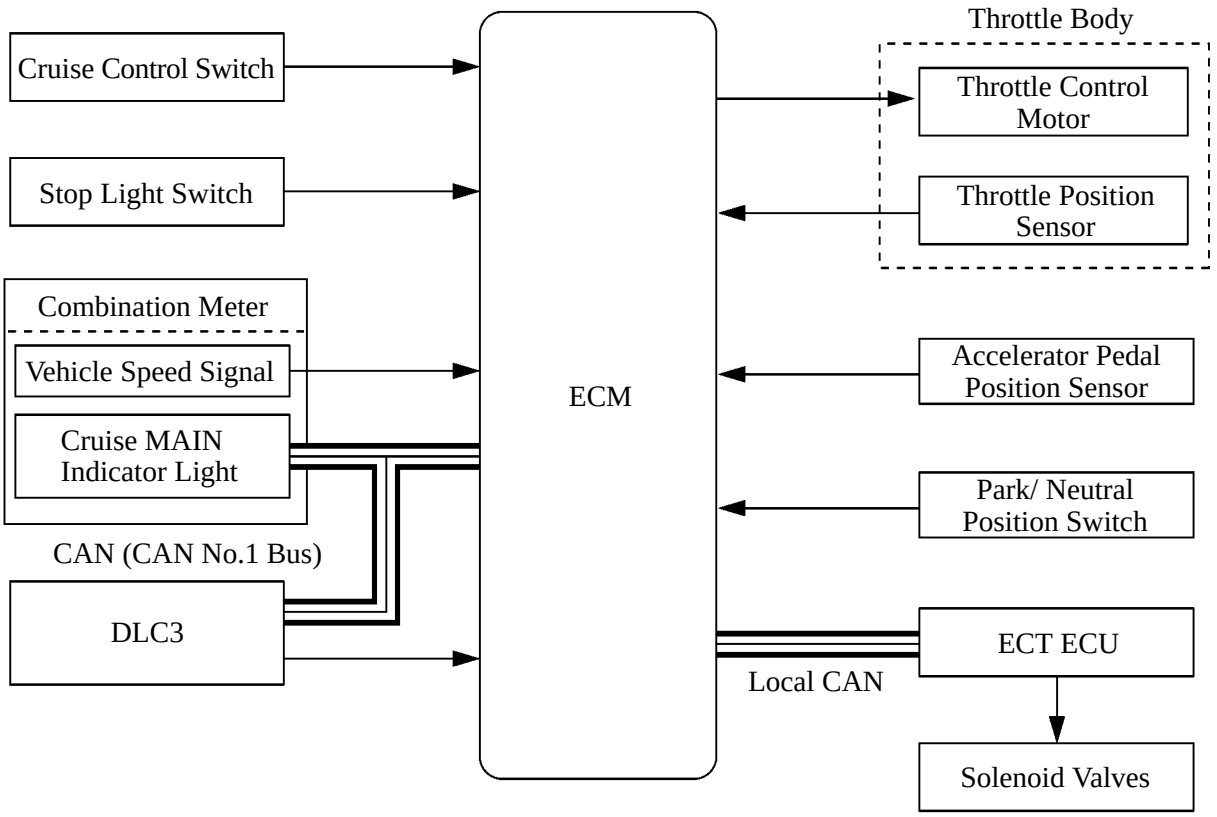

025BE123P

▶ Models With U250E Automatic Transaxle and E351 Manual Transaxle ●

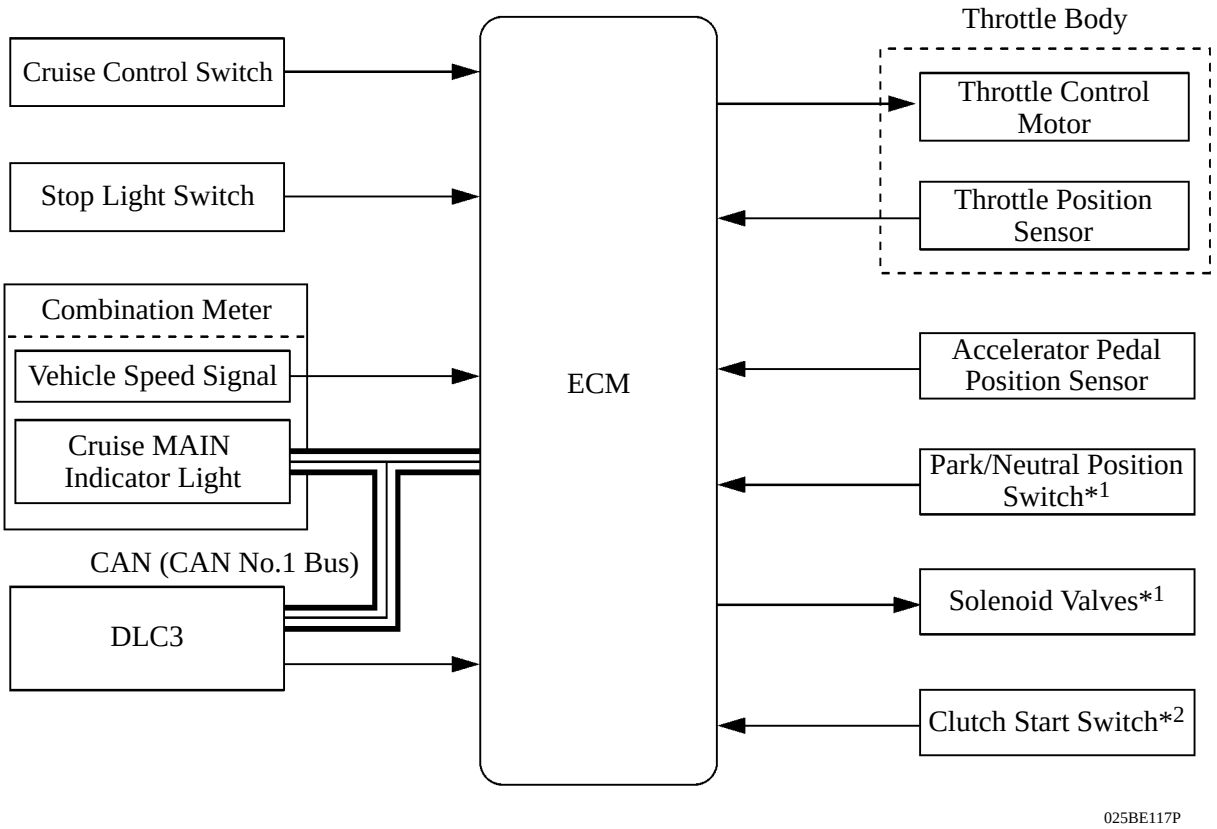

*1: Only for U250E automatic transaxle
*2: Only for E351 manual transaxle

2. Layout of Main Components

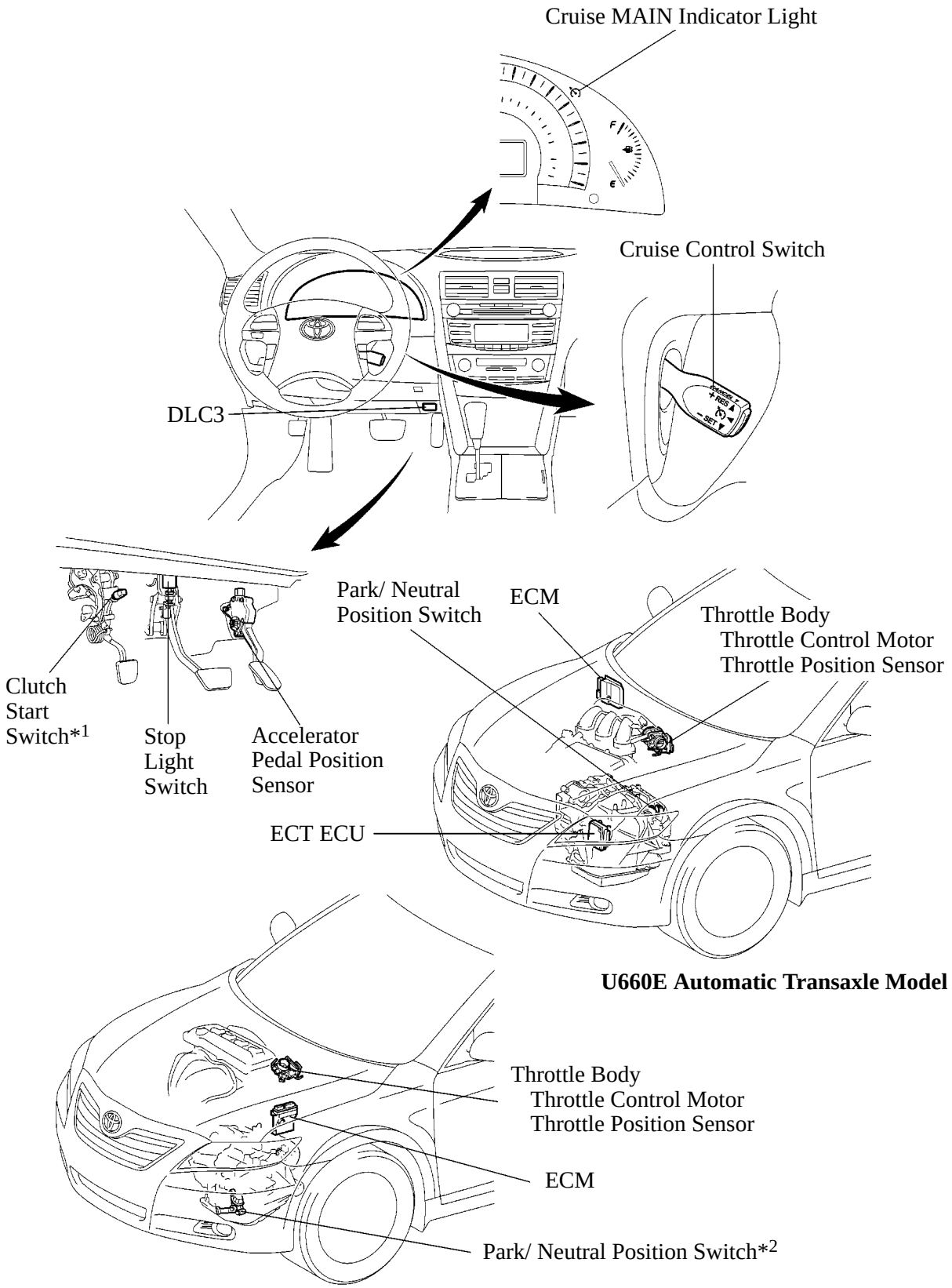

*1: Only for E351 Manual Transaxle Model
*2: Only for U250E Automatic Transaxle Model

3. System Control

General

The cruise control has the following control.

Control	Outline
Constant Speed Control	The ECM compares the actual vehicle speed and the set speed and if the vehicle speed is higher than the set speed, it uses the throttle control motor to decrease the throttle opening. If the actual vehicle speed is lower than the set speed, it uses the throttle control motor to increase the throttle opening.
Set Control	While this system fulfils the following conditions, and the cruise control switch is pressed to the SET/- side and released when the ON-OFF button on the cruise control switch has been pressed to turn the system on, the ECM stores the vehicle speed and maintains the vehicle constantly at that speed. The vehicle is running at a vehicle speed of about 40 km/h (25 mph) or more.
Low Speed Limit Control	The low speed limit is the lowest speed that cruise control can be set at and it is designed to be approx. 40 km/h (25 mph). The cruise control cannot be set below that speed. If the vehicle speed drops below that speed while running in the cruise control, the cruise control will be cancelled automatically. However the set speed in the memory is kept.
COAST Switch Control	While the cruise control switch is held to the SET/- side, the vehicle speed and the set vehicle speed change as follows. The vehicle decelerates constantly. The set vehicle speed changes to the speed that the vehicle is traveling at when the COAST switch is released.
Tap Down Control	When the cruise control switch is pushed momentarily (approx. 0.6 sec.) to the SET/- side, the vehicle speed and the vehicle setting speed change as follows. The vehicle will decelerate in increments of approx. 1.6 km/h (1 mph) for each time the switch was pressed. However, if the difference between the actual vehicle speed and the vehicle setting speed is greater than 5 km/h (3.1 mph), the vehicle setting speed will change to the speed at which the vehicle was being driven at the time the switch was operated.
ACC Switch Control	When the cruise control switch is pushed to the RES/+ side and held, the vehicle speed and the vehicle setting speed change as follows. The vehicle accelerates constantly. The set vehicle speed changes to the speed as which the switch is releases.
Tap Up Control	When the cruise control switch is pushed momentarily (approx. 0.6 sec.) to the RES/+ side, the vehicle speed and the vehicle setting speed change as follows. The vehicle accelerates in increments of approx. 1.6 km/h (1 mph) for each time the switch was pressed. However, if the difference between the actual vehicle speed and the vehicle setting speed is greater than 5 km/h (3.1 mph), the vehicle setting speed does not change.
RES Switch Control	If cruise control is canceled for any reason other than a malfunction or main switch operation and vehicle speed is more than the low speed limit, the vehicle speed is returned to the speed before the cancellation of cruise operation by setting the cruise control switch to the RES/+ side. The cruise control mode can be resumed even if the vehicle speed drops below the low speed limit, because the speed in the memory is not cleared.

(Continued)

Control	Outline
Shift Down Control	**ECT ECU incorporated into ECM (U250E Automatic Transaxle):** When the vehicle is cruising uphill, shift-down control may be performed by the ECT (Electronic Control Transmission). When the ECM judges the end of cruising uphill based on the throttle valve angle, the shift-down control will turn on again. There is a case where the shift-down control turns off during ACC or RES switch control.
	ECT ECU isolated from ECM (U660E Automatic Transaxle): When the vehicle is cruising uphill, shift-down control may be performed by the ECT (Electronic Control Transmission). The ECM transmits the shift up request signal to the ECT ECU when the ECM judges the end of cruising uphill based on the throttle valve angle. If shift-down control is performed during ACC or RES switch control, the ECM transmits the shift up request signal to the ECT ECU after ACC or RES switch control is completed.
Manual Cancel Control	If any of the following signals is sent to the ECM, the cruise control is cancelled accordingly. Clutch switch ON signal/Depress the clutch pedal. (for M/T) Stop light switch ON signal/Depress the brake pedal. (for A/T) CANCEL switch ON signal (cruise control switch moved to CANCEL side) Cruise control switch (ON-OFF button) OFF signal.
Automatic Cancel Control	When any of the following conditions occur during cruise control operation, the speed that is set in the memory is cleared and the cruise control is cancelled. Stop light switch open or short circuit The vehicle speed signal is not input for a predetermined period of time. ETCS-i malfunction Furthermore, the cruise MAIN indicator light will blink until the ON-OFF button on the cruise control switch is used to turn the system off, and the operation of the cruise control will be disabled until the ON-OFF button is turned ON again.
	When any of the following conditions occur during cruise control driving, the speed that is set in the memory is cleared and the cruise control is cancelled. Stop light switch input signal is abnormal. Cruise control switch input signal is abnormal. Furthermore, the cruise MAIN indicator light will blink until the ON-OFF button on the cruise control switch is used to turn the system off, and the operation of the cruise control will be disabled until the power source* is turned IG-ON again.
	When any of the following conditions occur during cruise control driving, the cruise control is cancelled. Vehicle speed is below the low speed limit (approx. 40 km/h [25 mph]) or less. Vehicle speed decreases by 16 km/h (10 mph) or more below the speed at which the cruise control was set.
Diagnosis	When the ECM does not receive a vehicle speed signal for a predetermined period of time during cruising, or when cruise control is cancelled (automatic cancel) due to a malfunction of the cruise control, stop light switch or vehicle speed signal, the ECM immediately blinks the cruise MAIN indicator light due to the malfunction. The contents relating to the malfunction will be stored in the ECM.

*: Power source conditions can be changed by pressing the engine switch on models with the smart key system and by operating the ignition switch on models without smart key system.

Diagnosis

If a malfunction occurs in the cruise control system, during cruise control operation, the ECM actuates the automatic cancel control and blinks the cruise MAIN indicator light to inform the driver of a malfunction. At this time, the ECM memorizes the malfunction in the form of 5-digit and 2-digit DTC (Diagnostic Trouble Code).

The 5-digit DTC can be read by connecting a hand-held tester to the DLC3.

The 2-digit DTC is output to the cruise MAIN indicator light when the Tc and CG terminals of the DLC3 connector are connected through the use of the SST (09843-18040). Thus, these DTC can be obtained by counting the number of blinks of the cruise MAIN indicator light.

Service Tip

When using a hand-held tester, a dedicated adapter [CAN VIM (Vehicle Interface Module)] must be connected between the DLC3 and the hand-held tester. For details, see the 2007 Camry Repair Manual (Pub. No. RM0250U).

REAR VIEW MIRROR

●DESCRIPTION

The rear view mirrors have the following functions:

Mirror	Function	Equipment
Inside Rear View Mirror	Automatic glare-resistant EC (Electrochromic) mirror & compass display	Option*
Outside Rear View Mirror	Electric remote control mirror	Standard
	Electric remote control mirror & mirror heater (See page BE-172)	Option*

*: Standard on XLE grade models

●COMPASS DISPLAY

A sensor that detects the earth's magnetic field is built inside the inside rear view mirror. This sensor is influenced less by the magnetization of the vehicle.

▶The compass indicates north as 0 and the forward direction of the vehicle using 8 azimuths. (N, NE, E, SE, S, SW, W, and NW)

▶Press the Mirror switch for 3 to 6 seconds to indicate the compass.

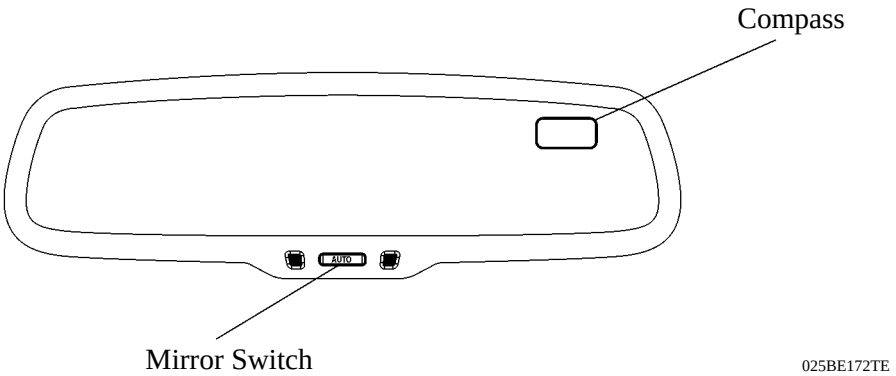

Service Tip

To ensure an accurate compass reading, it is necessary to perform a magnetic variation (declination) adjustment in order to set the number that identifies the region that the vehicle will be used in. The numbers that identify the regions are shown in the illustration below.

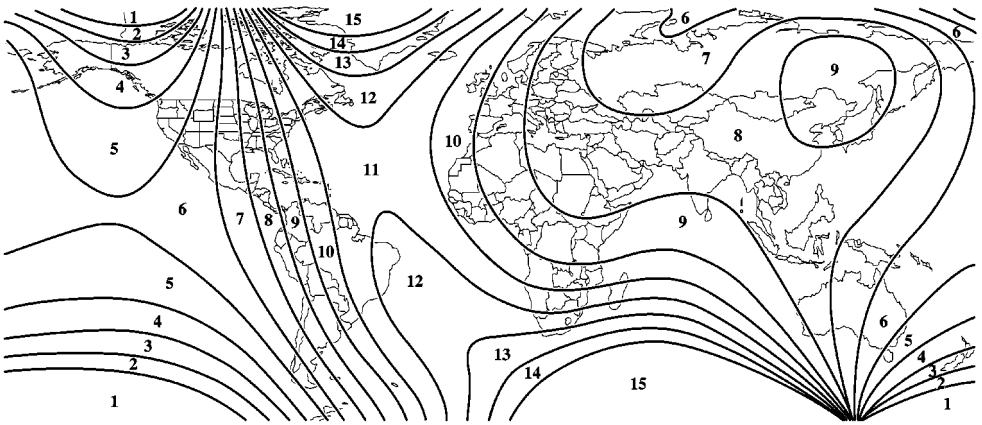

As the compass system needs to memorize the vehicle's marked magnetic field, it is necessary to perform calibration for each vehicle. Once calibration has been completed, it is not necessary to perform calibration unless a sudden magnetic field change occurs. In case of occurrence of a sudden magnetic field change, "C" will be displayed in the compass display and it will be necessary to perform calibration again.
For details, see the 2007 Camry Repair Manual (Pub. No. RM0250U).

■AUTOMATIC GLARE-RESISTANT EC MIRROR

1. General

During nighttime driving, if a large difference in intensity exists between the surrounding light and the light reflected off the inside rear view mirror from the headlights behind, an automatic glare-resistant EC (Electrochromic) mirror automatically reduces the reflection rate of the mirror and thus dampens the glare from the mirror.

▶This system uses 2 sensors (surrounding light detection sensor, rear light detection sensor) that are present in the inside rear view mirror to detect the difference between the intensity of light in the environment, and the light that the inside rear view mirror receives from the rear of the vehicle.

▶When the ignition switch/engine switch* is changed from OFF to IG-ON, this system defaults to AUTO mode.

*:Only for models with Smart Key System

▶ System Diagram ◀

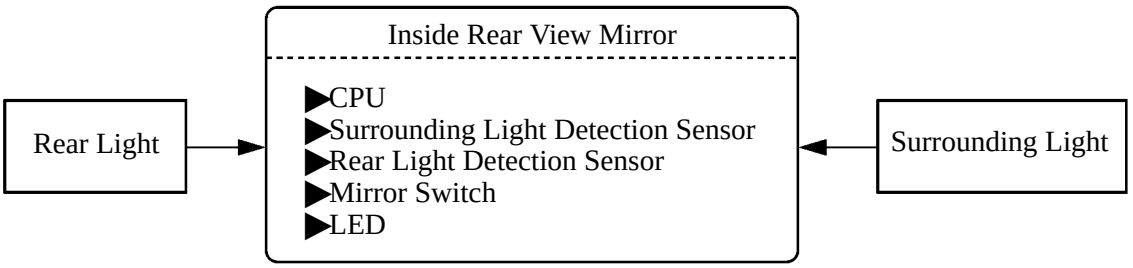

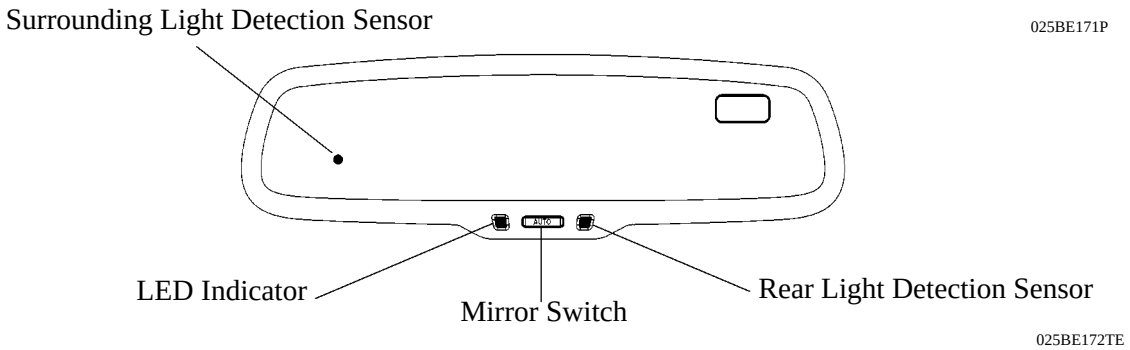

2. Function of Components

Component	Function
Surrounding Light Detection Sensor	Detects the intensity of the light surrounding the vehicle.
Rear Light Detection Sensor	Detects the intensity of the light that strikes the inside rear view mirror from behind the vehicle.
LED	Turns on to inform the driver when AUTO mode is operating.
Mirror Switch	Mirror modes can be selected and compass setting can be performed by pressing the Mirror switch for a given length of time as follows ▶0 ~ 3 seconds: AUTOmode/AUTO OFF mode ▶3 ~ 6 seconds: Compass display/compass clear ▶6 ~ 9 seconds: Compass region setting ▶9 seconds or more: Compass system calibration
EC Mirror Cell	Varies the refection rate of the mirror using the function of EC element.
CPU	Controls the reflections rate in accordance with the signals from the 2 sensors.

3. EC Mirror Cell

The gel type EC elements are placed between a layer of transparent conductive coating, and a layer of conductive reflector surfaces, which are placed between 2 sheets of glass. The EC elements have color coating characteristics. These characteristics are utilized to electronically vary the mirrors reflection rate through the electro-chemical oxidation reduction reaction.

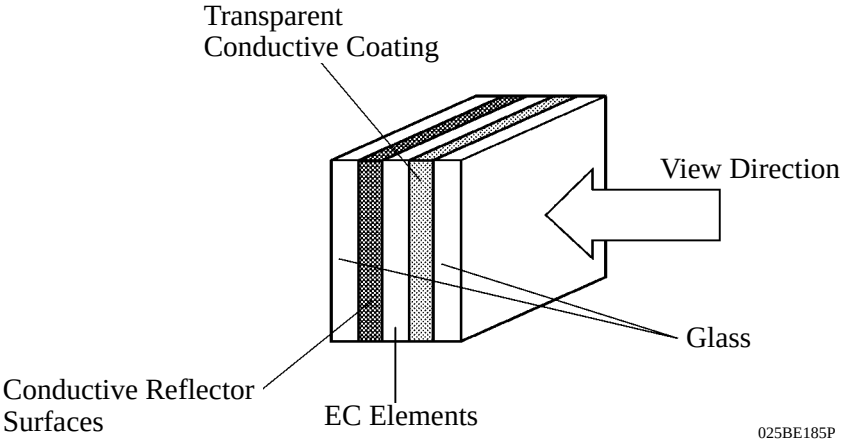

4. Reflection Rate Control

This CPU detects the surrounding light using its surrounding light detection sensor, the rear light using its rear light detection sensor, and determines whether it is day or night based on the intensity of the surrounding light. At the same time, the intensity of the glare from the rear is determined through the difference in intensity between the surrounding and rear light. In accordance with the intensity of the rear light, the reflection rate is varied steplessly.

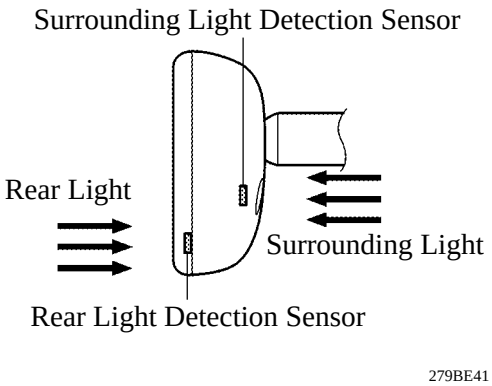

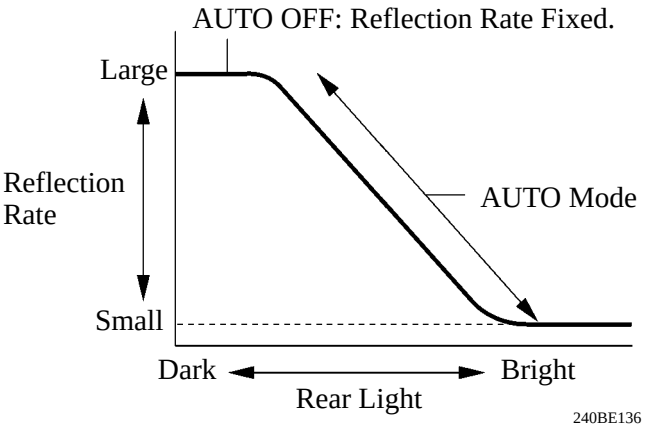

POWER SEAT SYSTEM

▪ DESCRIPTION

A power seat system is used for the driver and front passenger seats on all models.

The power seat system for the front seats has the functions:

: Standard

Function		Equipment		Stroke
		Driver	Front Passenger	
(1)	Seat Slide		Option*	260 (10.24) mm (in.)
(2)	Reclining		Option*	48 degrees
(3)	Front Vertical		—	24 (0.94) mm (in.)
(4)	Rear Vertical (Lifter)		—	45 (1.77) mm (in.)
(5)	Lumbar Support		—	21 (0.80) mm (in.)

*: Standard on XLE grade models

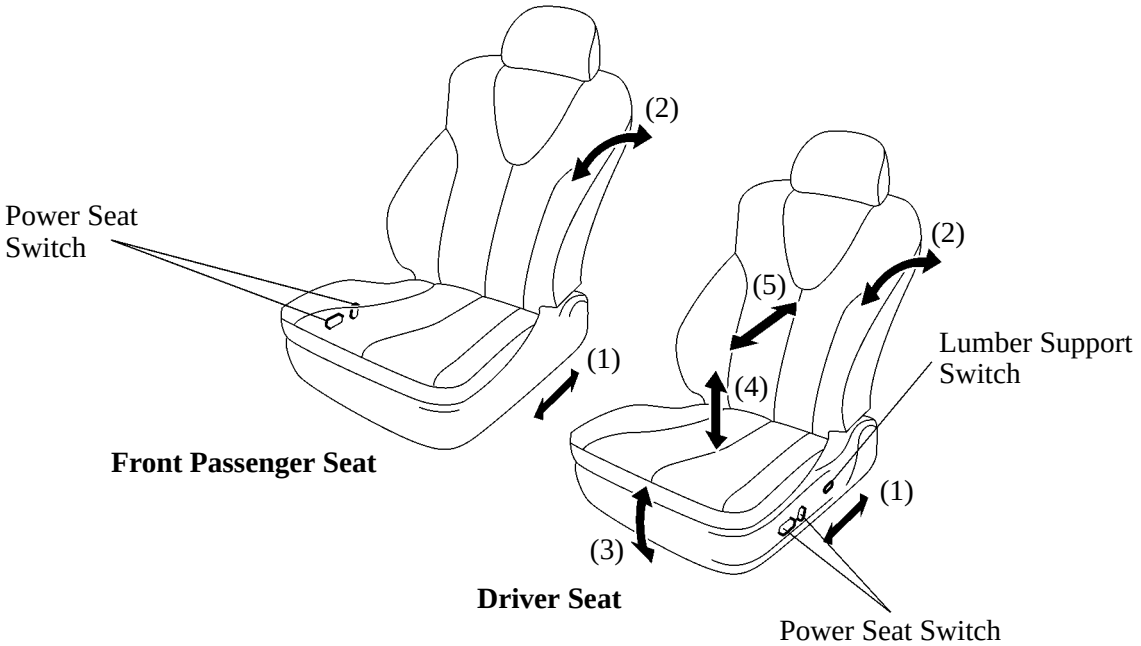

025BE173P

▶ System Diagram ●

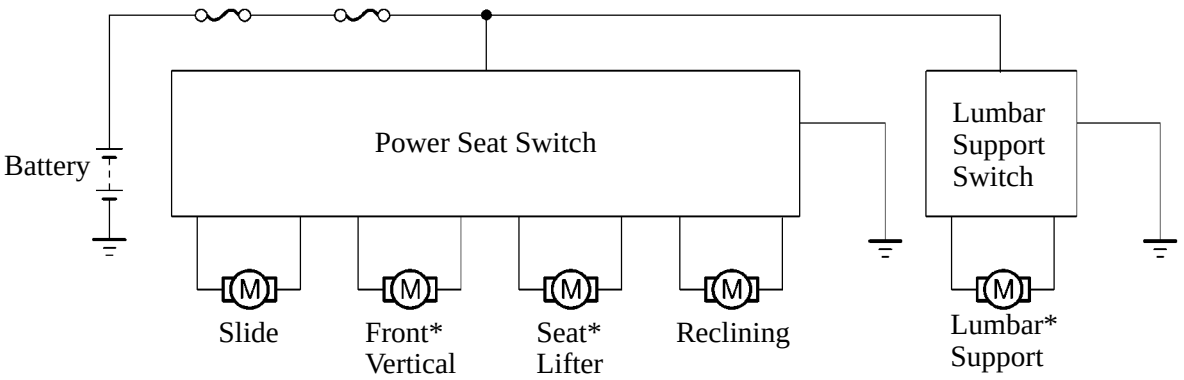

211BE41

*: Only for driver seat

SEAT HEATER SYSTEM

▪ DESCRIPTION

This system is optional equipment on the driver and front passenger seats of leather seat models.

A seat heater switch with a built-in indicator light for checking the heater operation is provided.

The output temperature of the seat heater is controlled by thermostat that are enclosed in the cushion.

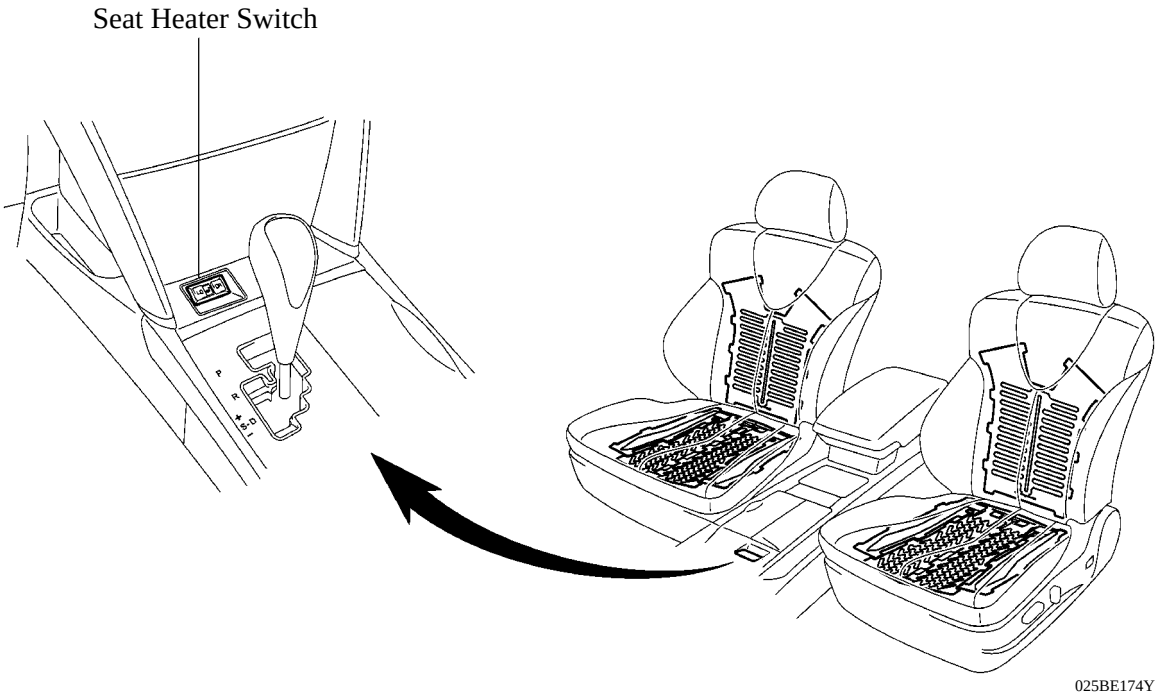

▶ System Diagram ●

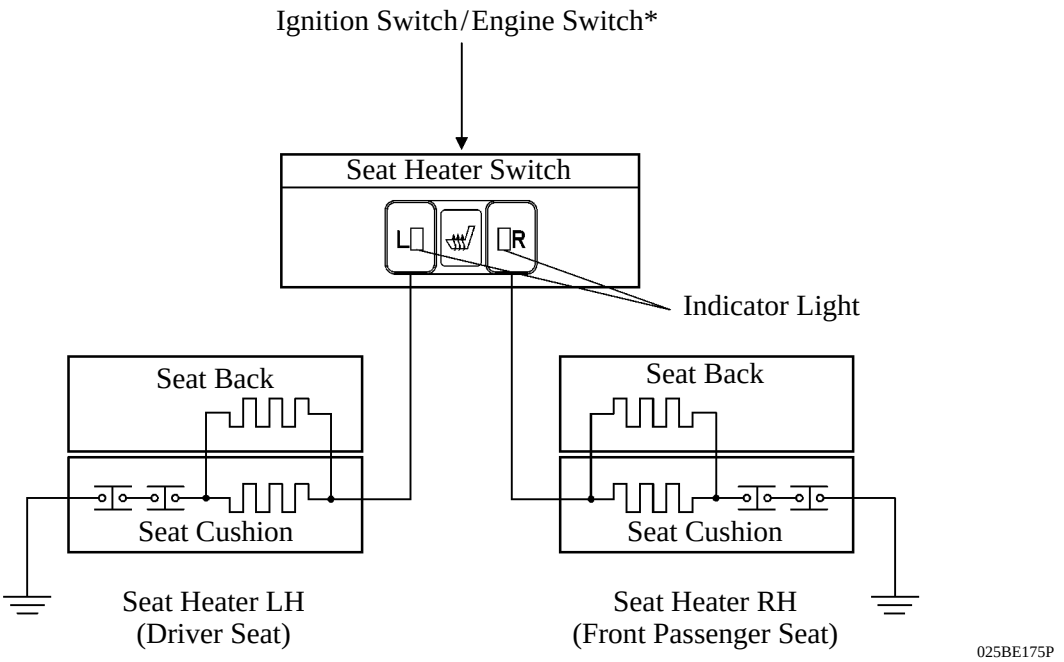

*: Models with smart key system

REAR WINDOW DEFOGGER SYSTEM

▪ DESCRIPTION

The rear window defogger system uses the heater wire on the rear window glass to defog the rear window glass.

This system is standard equipment on all models.

The rear window defogger system operates at the same time as the heater function of the outside rear view mirror.*1

This system is activated when the ignition switch/engine switch*2 is turned on and the rear window defogger switch is pushed. This switch is provided with a timer function to turn off the defogger and mirror heater after approx. 15 minutes. The operation period of the timer may extend to approx. 45 minutes depending on the circumstances of the outside air temperature and vehicle speed.

*1: Available as an option on XLE grade models
*2: Only for models with Smart Key System

▶ System Diagram ●

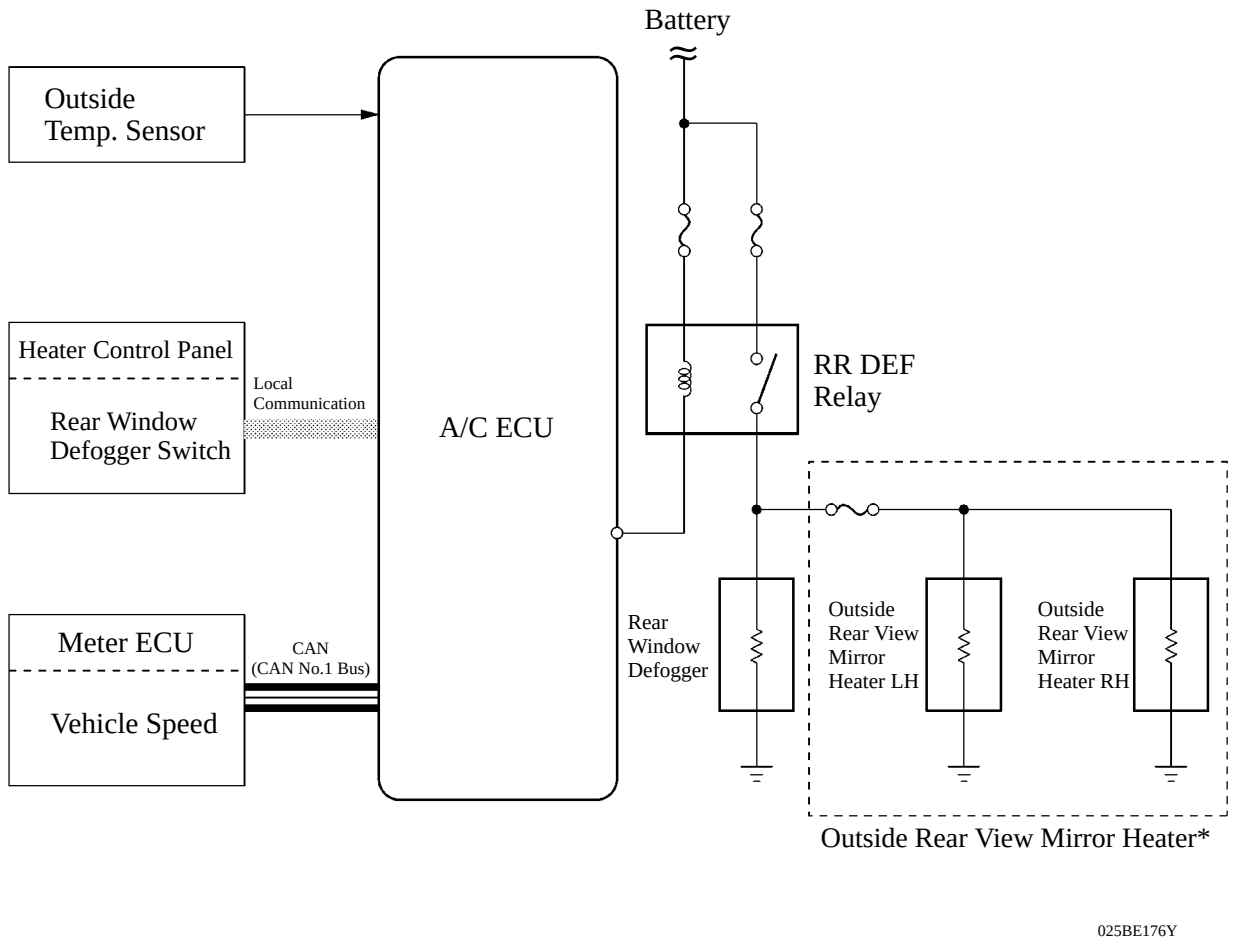

*: Available as an option on XLE grade models

▪ LAYOUT OF MAIN COMPONENTS

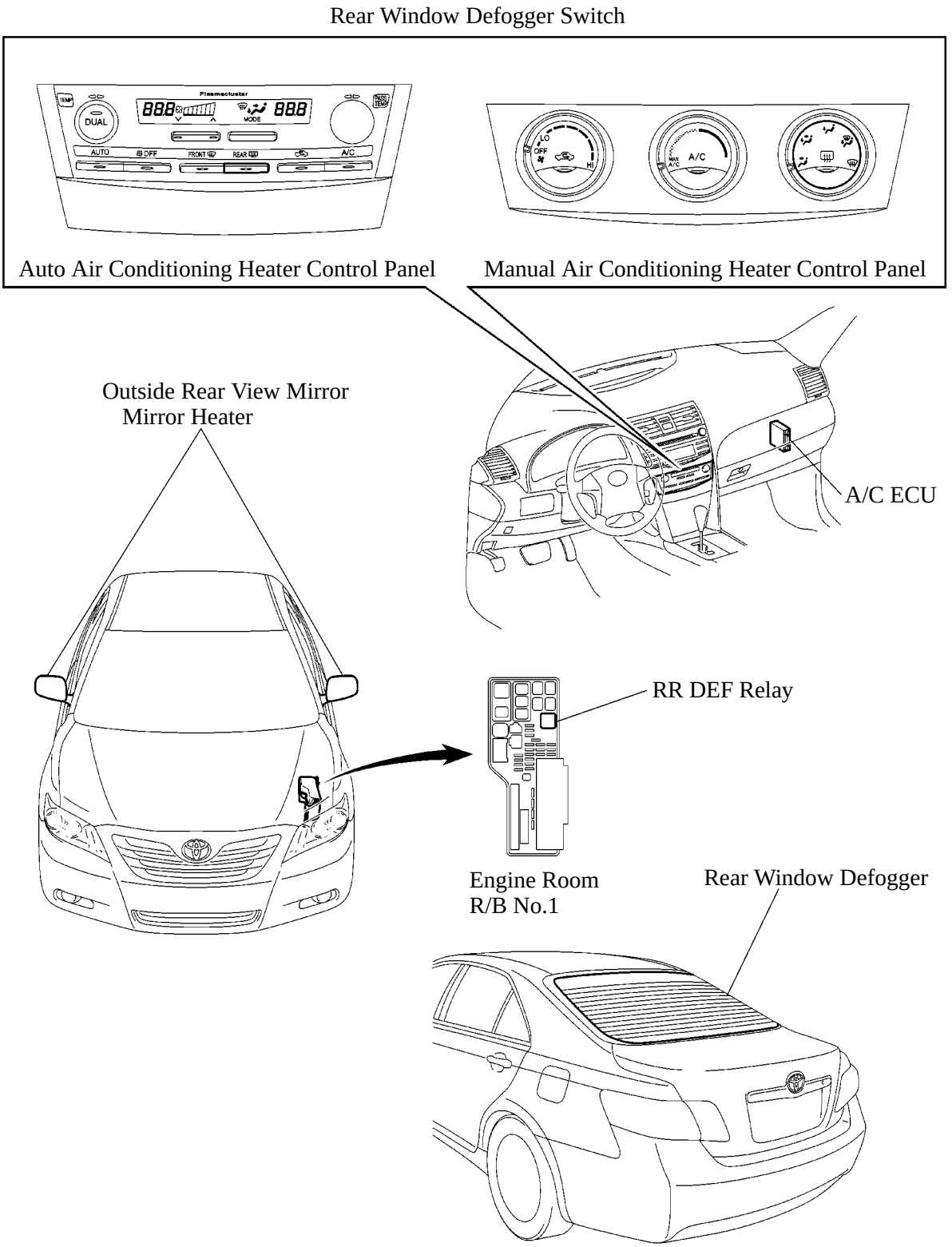

SLIDING ROOF SYSTEM

▪ DESCRIPTION

Sliding roof system is used on the XLE grade model as standard equipment and on the other grade model as optional equipment.

The ’06 Camry used a single switch to perform the tilt up-and-down and open-and-close operations of the sliding roof. However, on the ’07 Camry a separate switch is provided for each of the tilt up-and-down and open-and-close operations.

This system uses a single glass panel to perform tilt-up-down and open-and-close operations.

The sliding roof ECU uses 2 type Hall ICs to detect the position of the sliding roof. Sliding roof ECU and the 2 Hall ICs are integrated into the sliding roof motor assembly

▶ System Diagram ●

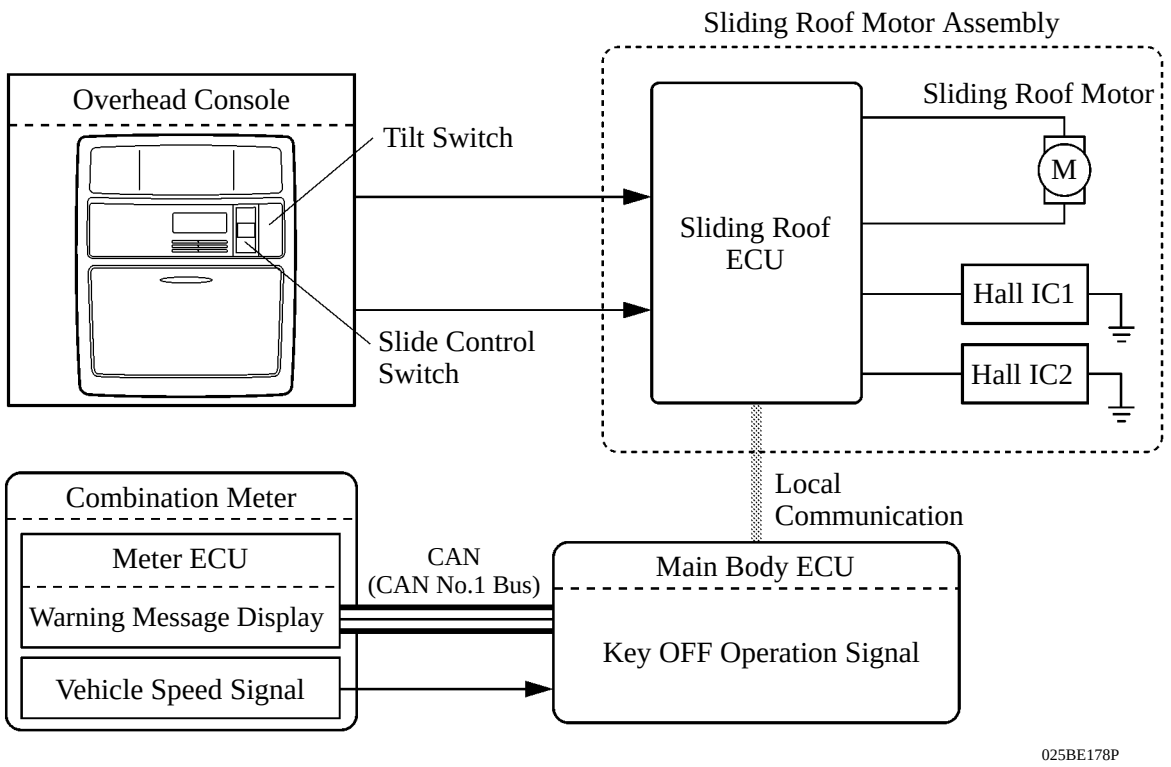

Service Tip

The memory is not cleared if battery terminals are disconnected. However, initialization is necessary after the sliding roof motor assembly is replaced. Perform the initialization as follows:

1) Keep pressing the TILT UP or SLIDE CLOSE switch until the initialization completely. This will enable the sliding roof ECU to start initializing and perform the tilt up, tilt down, open, and close operations of the sliding roof in sequence.
2) Keep the switch pressed for 1 second after the tilt-up operation is completed.
3) The sliding roof ECU performs the tilt down, open, and close operations.
4) The initialization process ends when the close operation is completed.

Keep the tilt-up or slide close switch pressed during initialization. If the tilt up or close switch is released during initialization, the system will not be able to complete the initialization. If this occurs, the aforementioned steps must be performed again.

For details, see the 2007 Camry Repair Manual (Pub. No.RM0250U).

■FUNCTION

1. General

This sliding roof system has the following functions:

Function	Outline
Manual open-and-close	This function causes the sliding roof to open (or close) while the SLIDE OPEN switch (or SLIDE CLOSE switch) is pressed. The sliding roof stops as soon as the switch is released.
One touch auto open-and-close	This function enables the sliding roof to be fully opened (or closed) at 0.3 sec. or long press of the SLIDE OPEN switch (or SLIDE CLOSE switch).
Manual tilt up-and-down	This function causes the sliding roof to tilt up (or tilt down) while the TILT UP switch (or TILT DOWN switch) is pressed. The sliding roof stops as soon as the switch is released.
One touch auto tilt up-and-down	This function enables the sliding roof to be fully tilt up (or down) at 0.3 sec. or long press of the TILT UP switch (or TILT DOWN switch).
Jam protection	The “jam protection” function automatically stops the sliding roof and moves it open half way (or fully tilt up) if a foreign object gets jammed in the sliding roof during close or tilt down operation.
Key-off operation	The “key-off operation” function makes it possible to operate the sliding roof for approximately 43 seconds after the ignition switch or power source mode is turned to the ACC or OFF position, if the front doors are not opened.
Sliding roof open warning (See Page BE-177)	When the ignition switch/engine switch* is turned from IG-ON to OFF and the driver door is opened with the sliding roof open, the buzzer in the combination meter sounds once. Then, a warning message appears on the multi-information display.

*: Only for models with smart key system

2. Jam Protection Function

The Hall IC converts the changes in the magnetic flux that occur due to the rotation of the worm gear into pulse signals and outputs them to the ECU.

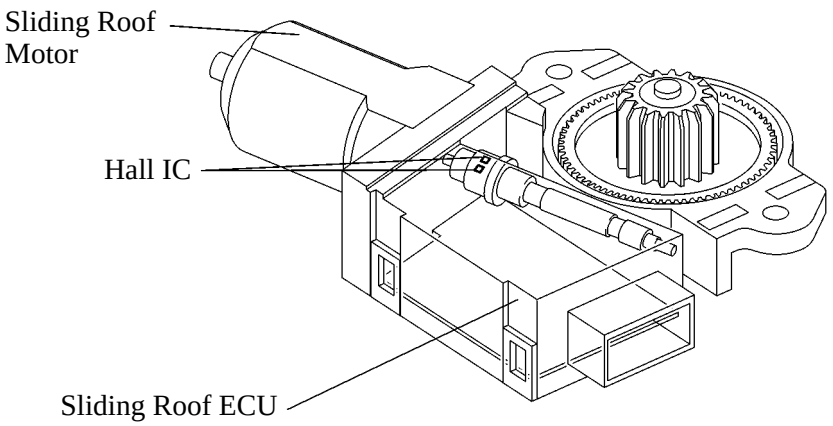

Sliding Roof Motor Assembly

01YBE140Y

To control the jam protection function, the ECU monitors the amount of movement and judges jamming of the moon roof based on the pulse signals from the Hall IC1, and the moving direction of the moon roof from the phase difference between the pulsed from the Hall IC1 and Hall IC2.

▶ Monitoring Amount of Movement Judgment of Jamming ◀

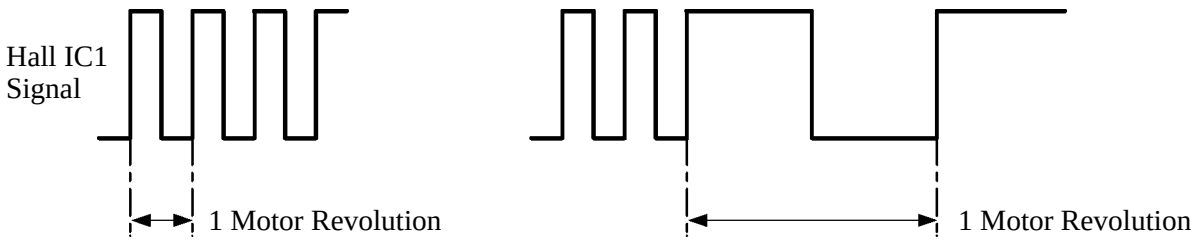

Normal **Jammed**

232BE34

▶ Judgment of Movement Direction ◀

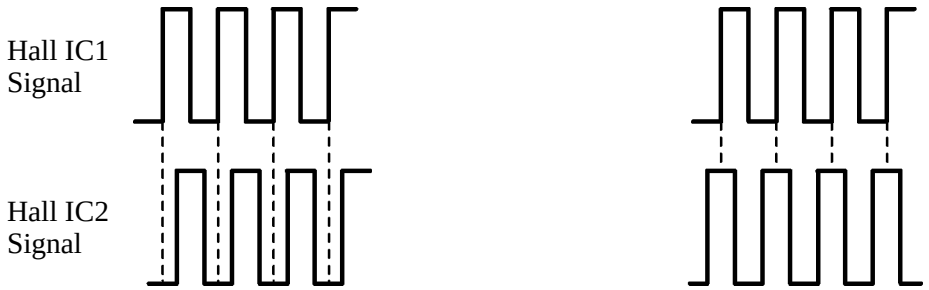

OPEN/TILT UP **CLOSE/TILT DOWN**

232BE35

3. Sliding Roof Open Warning

When the ignition switch/engine switch* is changed from IG-ON to OFF and the driver door is opened when the sliding roof is open, the siding roof ECU sounds the buzzer in the combination meter. Then, a warning message appears on the multi-information display.

Warning Condition		The warning is activated if all of the following conditions are met: Sliding roof is not fully closed. Ignition switch/engine switch* is “OFF” Driver door is opened.
Combination Meter	Buzzer	Sounds once
	Multi-information Display	MOONROOF OPEN 025BE179P
	Master Warning Light	Flash
Warning Stop Condition		The warning is stopped when one of the following conditions is met. 8 seconds have elapsed after the warning condition is detected. Ignition switch/engine switch* is “ON” Driver door is closed.

*: Only for models with smart key system

STEERING PAD SWITCH

●DESCRIPTION

▶Steering pad switches are standard equipment on all models.

▶The steering pad switches that are provided on the steering pad may vary due to optional equipment, as indicated in the table below.

: Standard

System	Switch	Equipment		
		LE	XLE	SE
Audio	▶VOLUME +/- ▶SEEK +/- ▶MODE			
Multi-information Display (Combination Meter)	DISP	—		—
Air Conditioning	▶TEMP+/- ▶AUTO/OFF	—		—
Voice Recognition	VOICE	Option		Option
Telephone	▶ON HOOK ▶OFF HOOK	Option		Option

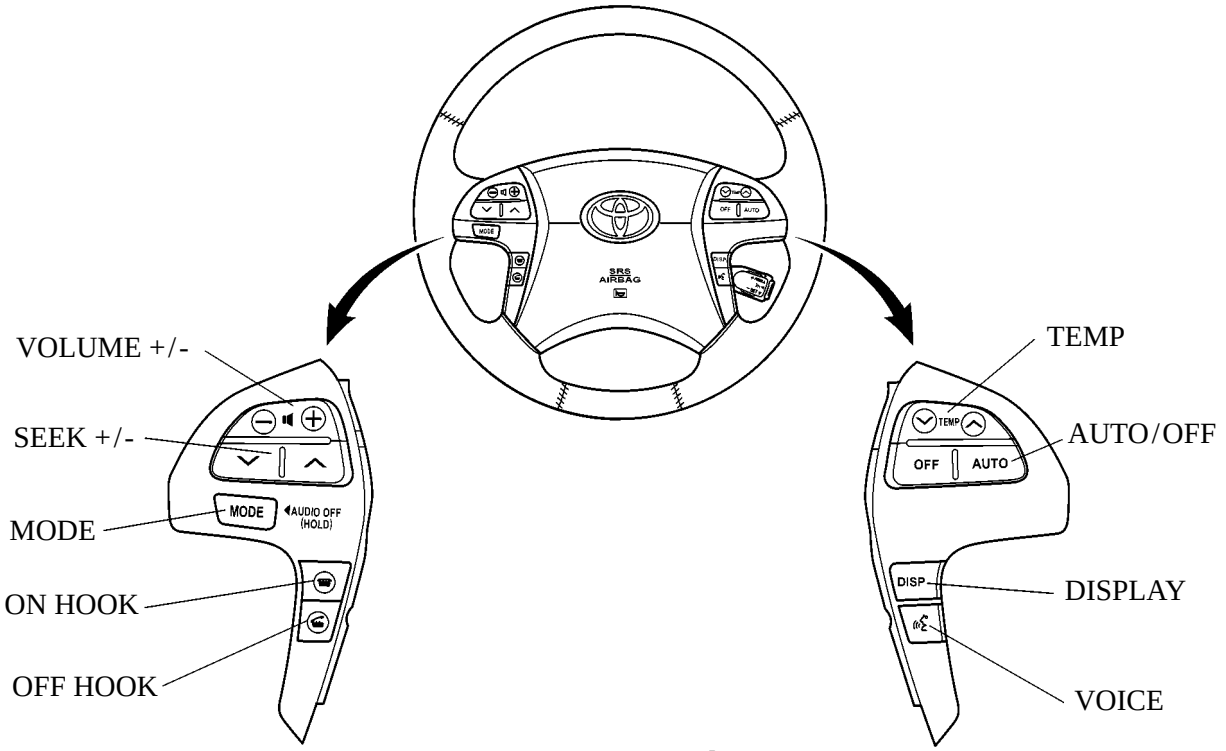

LE & XLE grade

025BE182Y

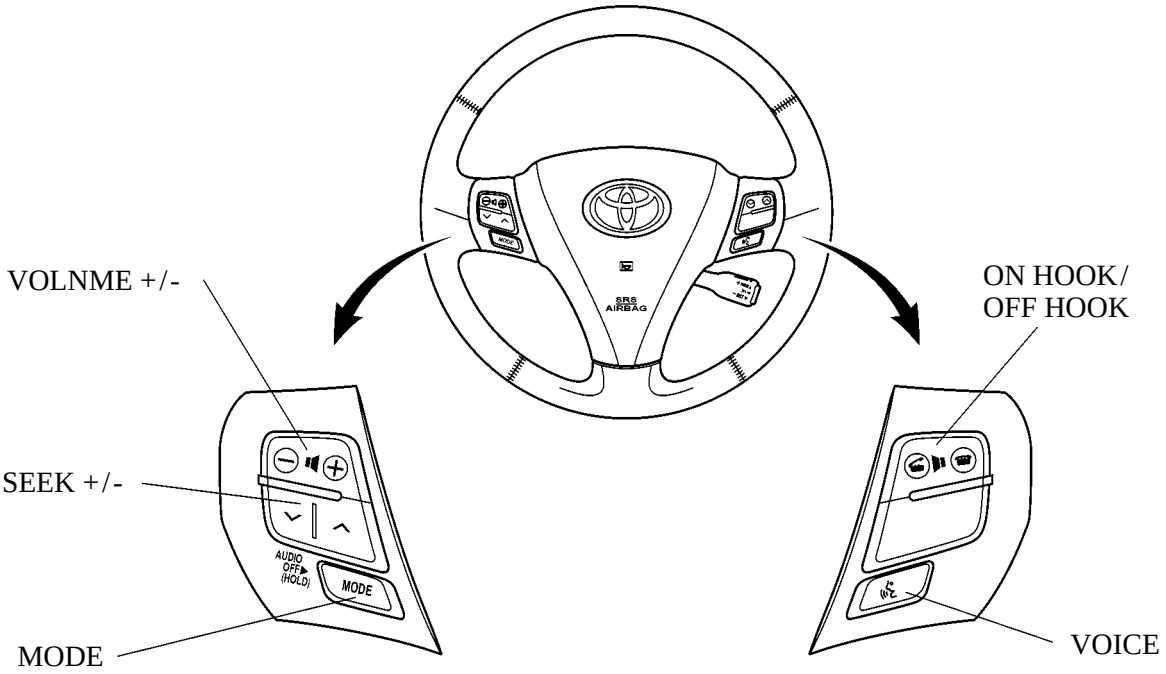

SE grade

025BE183Y

GARAGE DOOR OPENER

●DESCRIPTION

The garage door opener system is used on the XLE grade model as standard equipment and on the other grade model as optional equipment.
This system enables the garage door to be opened or closed from inside the vehicle by operating the switch.
This system provides the features listed below.

▶Up to three types of transmitter codes can be registered in the garage door opener.
▶The garage door opener switch is provided in the overhead console where it is easily accessible.
▶An indicator light is provided to enable the operator to verify the operation mode of the garage door opener.
▶A rolling code function is used, which changes the transmitter code each time the garage door opener switch is pressed.

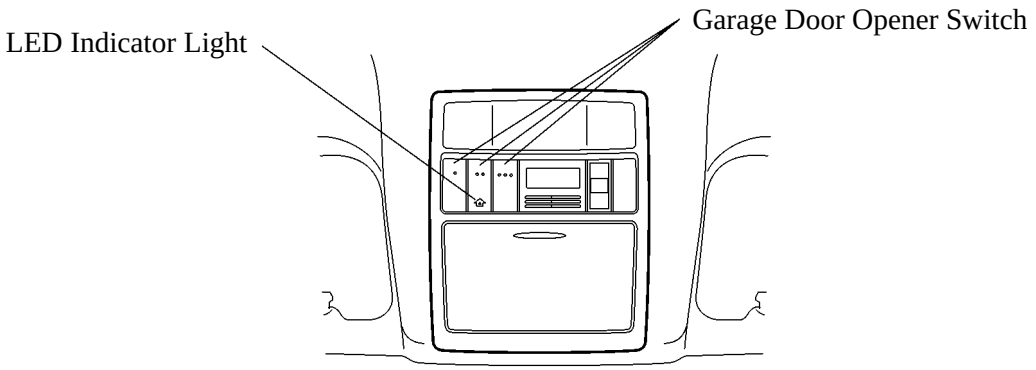

025BE184P

●FUNCTION

The following table shows the garage door opener functions and the indicator light operation in each of the modes.

Function	Outline	Indicator Light
Transmission Mode	While the switch is being pressed, the garage door opener transmits the code that was previously registered. Even if the button is pressed continuously, the transmission stops after 20 seconds.	Flash △ On (Rolling Code) ON (Except Rolling Code)
Learning Mode	When the button is pressed continuously for 20 seconds, the mode changes to learning mode in which a transmitter code can be registered. Or an existing code can be overwritten. If no codes are registered within 90 seconds of entering learning mode, the mode changes to low power mode.	Slow flashing (during learning mode) Quick flashing (registration completed)
All Delete Mode	When the 2 outside buttons are pressed simultaneously for 20 seconds, all the transmitter codes that are registered in the button are cleared. When the buttons are released within 10 seconds of clearing the codes, the mode changes to learning mode. When the buttons are pressed for longer than 10 seconds after clearing the codes, all the buttons will be registered with a code for operation verification.	Quick flashing (code clearing completed)
Low Power Mode	If the button remains pressed for longer than 100 seconds, such as in the case in which the pressed button gets caught, the mode changes to low power mode to reduce power consumption.	OFF

●TRANSMITTER CODE REGISTRATION PROCEDURE

The garage door opener contains an EEPROM in which the maximum of 3 types of transmitter recognition codes can be registered. A transmitter code is registered into the EEPROM of the garage door opener according to the following steps.

A: Press the button for registering transmitter codes continuously until the indicator light flashes slowly.

B: While keeping the garage door opener's button pressed, place the transmitter for while you wish to register the code within about 25 mm (1 in.) of the garage door opener and press the transmitter's button.

C: After the flashing of the indicator light changes from slow to quick flashing, the registration of the transmitter code has been completed. Then, release your fingers from the buttons of the garage door opener and the transmitter.

D: To register the code of another transmitter, repeat the operation starting with step "A". To register a new code to the button that already has a code registered to it, select the button to which you wish to register the new code and start the operation starting with step "A".

CAUTION

The garage door or the gate could operate unintentionally while registering a transmitter code. Therefore, make sure that there are no people near the garage door or the gate before carrying out this operation.

NOTE: ▶Before performing a transmitter code registration, stop the engine and pull the key from the ignition key cylinder.

▶The transmitter code of a garage door opener manufactured before 1982 cannot be registered in this system.

For details of procedures of transmitter code registration, see the 2007 Camry Repair Manual (Pub. No. RM0250U) to register the codes correctly.

TRUNK OPENER

▪ DESCRIPTION

The trunk opener can be operated through the wireless remote control transmitter or lever. For models equipped with the smart key system, see page BE-89

▶ System Diagram ●

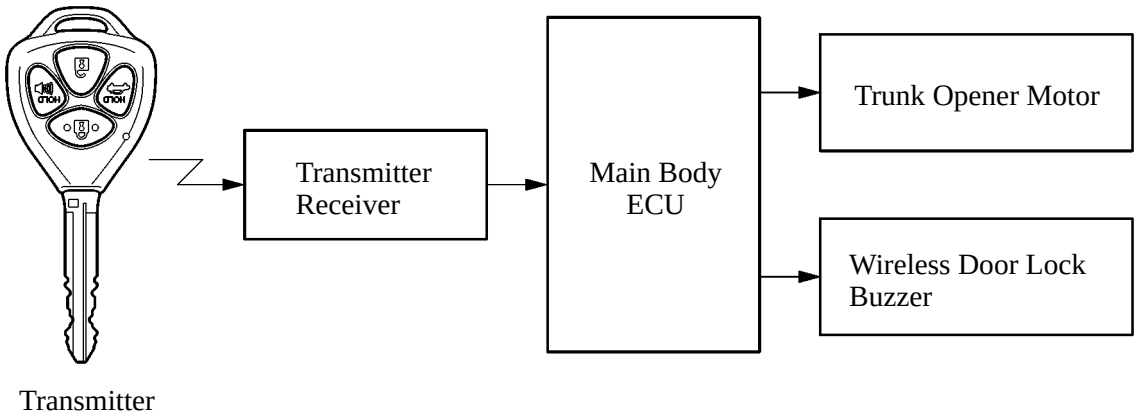

025BE180TE

▪ LAYOUT OF MAIN COMPONENTS

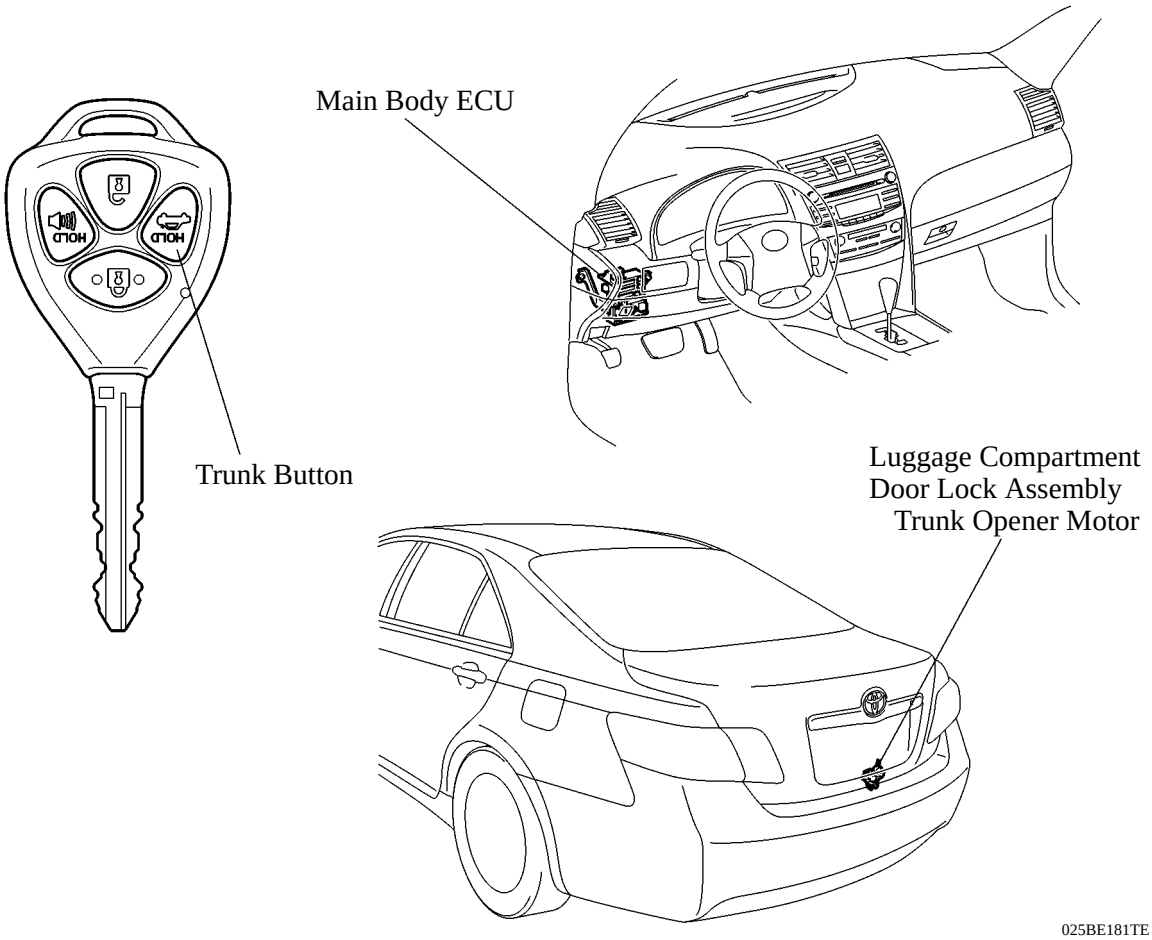

025BE181TE

MAJOR TECHNICAL SPECIFICATIONS

Item / Area				U.S.A.			
Body Type				Sedan			
Vehicle Grade				LE		XLE	SE
Model Code				ACV40L-A(C)EMNKA	ACV40L-A(C)EANKA	ACV40L-A(C)EAGKA	ACV40L-CEMSKA
Major Dimensions & Vehicle Weights	Overall	Length	mm (in.)	4805 (189.2)	4805 (189.2)	4805 (189.2)	4805 (189.2)
		Width	mm (in.)	1820 (71.7)	1820 (71.7)	1820 (71.7)	1820 (71.7)
		Height	mm (in.)	1470 (57.9)	1470 (57.9)	1470 (57.9)	1465 (57.7)
	Wheel Base		mm (in.)	2775 (109.3)	2775 (109.3)	2775 (109.3)	2775 (109.3)
	Tread	Front	mm (in.)	1575 (62.0)	1575 (62.0)	1575 (62.0)	1575 (62.0)
		Rear	mm (in.)	1565 (61.6)	1565 (61.6)	1565 (61.6)	1565 (61.6)
	Effective Head Room	Front	mm (in.)	986 (38.8), 962 (37.9)*2	986 (38.8), 962 (37.9)*2	986 (38.8), 962 (37.9)*2	986 (38.8), 962 (37.9)*2
		Rear	mm (in.)	959 (37.8), 950 (37.4)*2	959 (37.8), 950 (37.4)*2	959 (37.8), 950 (37.4)*2	959 (37.8), 950 (37.4)*2
	Effective Leg Room	Front	mm (in.)	1059 (41.7)	1059 (41.7)	1059 (41.7)	1059 (41.7)
		Rear	mm (in.)	974 (38.3)	974 (38.3)	974 (38.3)	974 (38.3)
	Shoulder Room	Front	mm (in.)	1469 (57.8)	1469 (57.8)	1469 (57.8)	1469 (57.8)
		Rear	mm (in.)	1446 (56.9)	1446 (56.9)	1446 (56.9)	1446 (56.9)
	Overhang	Front	mm (in.)	945 (37.2)	945 (37.2)	945 (37.2)	945 (37.2)
		Rear	mm (in.)	1085 (42.7)	1085 (42.7)	1085 (42.7)	1085 (42.7)
	Min. Running Ground Clearance		mm (in.)	140 (5.5)	140 (5.5)	140 (5.5)	135 (5.3)
	Angle of Approach		degrees	14.1	14.1	14.1	12.8
	Angle of Departure		degrees	15.3	15.3	15.3	14.9
	Curb Weight	Front	kg (lb)	870 (1918), 875 (1929)*3	890 (1962), 895 (1973)*3	900 (1984), 905 (1995)*3	890 (1962)
		Rear	kg (lb)	600 (1323), 605 (1334)*3	600 (1323), 605 (1334)*3	615 (1356), 625 (1378)*3	600 (1323)
		Total	kg (lb)	1470 (3241), 1480 (3263)*3	1490 (3285), 1500 (3307)*3	1515 (3340), 1530 (3373)*3	1490 (3285)
	Gross Vehicle Weight (MLVW*1)	Front	kg (lb)	976 (2152), 981 (2162)*3	997 (2197), 1003 (2212)*3	1010 (2227), 1015 (2237)*3	1003 (2212)
		Rear	kg (lb)	931 (2053), 938 (2068)*3	929 (2048), 936 (2063)*3	945 (2083), 952 (2098)*3	943 (2078)
		Total	kg (lb)	1907 (4205), 1919 (4230)*3	1925 (4245), 1939 (4275)*3	1955 (4310), 1966 (4335)*3	1946 (4290)
	Fuel Tank Capacity		ℓ (US.gal, Imp.gal)	70 (18.5, 15.5)	70 (18.5, 15.5)	70 (18.5, 15.5)	70 (18.5, 15.5)
	Luggage Capacity (SAE)		m^3 (cu.ft.)	0.425 (15.0)	0.425 (15.0)	0.411 (14.5)	0.411 (14.5)
Performance	Max. Speed		km / h (mph)	210 (130)	205 (127)	205 (127)	210 (130)
	Max. Cruising Speed		km / h (mph)	—	—	—	—
	Acceleration	0 to 60 mph	sec.	9.1	9.3	9.3	9.1
		0 to 400 m	sec.	—	—	—	—
	Max. Permissible Speed	1st Gear	km / h (mph)	54 (34)	54 (34)	54 (34)	54 (34)
		2nd Gear	km / h (mph)	95 (59)	98 (61)	98 (61)	95 (59)
		3rd Gear	km / h (mph)	146 (91)	152 (94)	152 (94)	146 (91)
		4th Gear	km / h (mph)	200 (124)	—	—	200 (124)
		5th Gear	km / h (mph)	—	—	—	—
	Turning Diameter (Outside Front)	Wall to Wall	m (ft)	11.8 (38.7)	11.8 (38.7)	11.8 (38.7)	11.8 (38.7)
		Curb to Curb	m (ft)	11.0 (36.1)	11.0 (36.1)	11.0 (36.1)	11.0 (36.1)
Engine	Engine Type			2AZ-FE	2AZ-FE	2AZ-FE	2AZ-FE
	Valve Mechanism			16-valve, DOHC with VVT-i	16-valve, DOHC with VVT-i	16-valve, DOHC with VVT-i	16-valve, DOHC with VVT-i
	Bore x Stroke		mm (in.)	88.5 x 96.0 (3.48 x 3.78)	88.5 x 96.0 (3.48 x 3.78)	88.5 x 96.0 (3.48 x 3.78)	88.5 x 96.0 (3.48 x 3.78)
	Displacement		cm^3 (cu.in.)	2362 (144.1)	2362 (144.1)	2362 (144.1)	2362 (144.1)
	Compression Ratio			9.8 : 1	9.8 : 1	9.8 : 1	9.8 : 1
	Carburetor Type			SFI	SFI	SFI	SFI
	Octane Rating			87 or more	87 or more	87 or more	87 or more
	Max. Output (SAE-NET)		kW / rpm (HP@rpm)	118 / 6000 (158 @ 6000), 116 / 6000 (155 @ 6000)*4	118 / 6000 (158 @ 6000), 116 / 6000 (155 @ 6000)*4	118 / 6000 (158 @ 6000), 116 / 6000 (155 @ 6000)*4	118 / 6000 (158 @ 6000), 116 / 6000 (155 @ 6000)*4
	Max. Torque (SAE-NET)		N·m / rpm (ft-lbf@rpm)	218 / 4000 (161 @ 4000), 214 / 4000 (158 @ 4000)*4	218 / 4000 (161 @ 4000), 214 / 4000 (158 @ 4000)*4	218 / 4000 (161 @ 4000), 214 / 4000 (158 @ 4000)*4	218 / 4000 (161 @ 4000), 214 / 4000 (158 @ 4000)*4
Engine Electrical	Battery Capacity (5HR)		Voltage & Amp. hr.	12-55	12-55	12-55	12-55
	Alternator Output		Watts	1200	1200	1200	1200
	Starter Output		kW	1.7	1.7	1.7	1.7
Chassis	Clutch Type			Dry, Single	—	—	Dry, Single
	Transaxle Type			E351	U250E	U250E	E351
	Gear Ratio	In First		3.538	3.943*5	3.943*5	3.538
		In Second		2.045	2.197*5	2.197*5	2.045
		In Third		1.333	1.413*5	1.413*5	1.333
		In Fourth		0.972	0.975*5	0.975*5	0.972
		In Fifth		0.731	0.703*5	0.703*5	0.731
		In Sixth		—	—	—	-
		In Reverse		3.583	3.145*5	3.145*5	3.583
	Differential Gear Ratio			3.944	3.391	3.391	3.944
	Brake Type	Front		Ventilated Disc	Ventilated Disc	Ventilated Disc	Ventilated Disc
		Rear		Solid Disc	Solid Disc	Solid Disc	Solid Disc
	Parking Brake Type			Duo-servo	Duo-servo	Duo-servo	Duo-servo
	Brake Booster Type and Size			Single,10”	Single,10”	Single,10”	Single,10”
	Proportioning Valve Type			—	—	—	—
	Suspension Type	Front		MacPherson Strut	MacPherson Strut	MacPherson Strut	MacPherson Strut
		Rear		MacPherson Strut	MacPherson Strut	MacPherson Strut	MacPherson Strut
	Stabilizer Bar	Front		Standard	Standard	Standard	Standard
		Rear		Standard	Standard	Standard	Standard
	Steering Gear Type			Rack & Pinion	Rack & Pinion	Rack & Pinion	Rack & Pinion
	Power Steering Type			Hydraulic Type	Hydraulic Type	Hydraulic Type	Hydraulic Type

*1: Maximum Loaded Vehicle Mass *2: With sliding roof *3: TMMK production models *4: Models for California package *5: Counter gear ratio included

U.S.A.			
Sedan			
SE	LE	XLE	SE
ACV40L-CEASKA	GSV40L-A(C)ETNKA	GSV40L-A(C)ETGKA	GSV40L-CETSKA
4805 (189.2)	4805 (189.2)	4805 (189.2)	4805 (189.2)
1820 (71.7)	1820 (71.7)	1820 (71.7)	1820 (71.7)
1465 (57.7)	1470 (57.9)	1470 (57.9)	1465 (57.7)
2775 (109.3)	2775 (109.3)	2775 (109.3)	2775 (109.3)
1575 (62.0)	1575 (62.0)	1575 (62.0)	1575 (62.0)
1565 (61.6)	1565 (61.6)	1565 (61.6)	1565 (61.6)
986 (38.8), 962 (37.9)*2	986 (38.8), 962 (37.9)*2	986 (38.8), 962 (37.9)*2	986 (38.8), 962 (37.9)*2
959 (37.8), 950 (37.4)*2	959 (37.8), 950 (37.4)*2	959 (37.8), 950 (37.4)*2	959 (37.8), 950 (37.4)*2
1059 (41.7)	1059 (41.7)	1059 (41.7)	1059 (41.7)
974 (38.3)	974 (38.3)	974 (38.3)	974 (38.3)
1469 (57.8)	1469 (57.8)	1469 (57.8)	1469 (57.8)
1446 (56.9)	1446 (56.9)	1446 (56.9)	1446 (56.9)
945 (37.2)	945 (37.2)	945 (37.2)	945 (37.2)
1085 (42.7)	1085 (42.7)	1085 (42.7)	1085 (42.7)
135 (5.3)	135 (5.3)	135 (5.3)	130 (5.1)
12.8	14.1	14.1	12.8
14.9	15.3	15.3	14.9
900 (1984)	960 (2116), 965 (2127)*3	965 (2127), 970 (2138)*3	965 (2127)
610 (1345)	600 (1323), 605 (1334)*3	620 (1367), 625 (1378)*3	615 (1356)
1520 (3351)	1560 (3439), 1570 (3461)*3	1585 (3494), 1595 (3516)*3	1580 (3483)
1017 (2242)	1062 (2342), 1069 (2357)*3	1069 (2357), 1076 (2372)*3	1078 (2377)
949 (2093)	931 (2053), 936 (2063)*3	947 (2088), 952 (2098)*3	956 (2108)
1966 (4335)	1994 (4395), 2005 (4420)*3	2016 (4445), 2028 (4470)*3	2034 (4485)
70 (18.5, 15.5)	70 (18.5, 15.5)	70 (18.5, 15.5)	70 (18.5, 15.5)
0.411 (14.5)	0.425 (15.0)	0.411 (14.5)	0.411 (14.5)
210 (130)	230 (143)	230 (143)	230 (143)
—	—	—	—
9.3	6.8	6.8	6.8
—	—	—	—
54 (34)	60 (37)	60 (37)	60 (37)
98 (61)	104 (65)	104 (65)	104 (65)
152 (94)	139 (86)	139 (86)	139 (86)
—	198 (123)	198 (123)	198 (123)
—	—	—	—
11.8 (38.7)	11.8 (38.7)	11.8 (38.7)	11.8 (38.7)
11.0 (36.1)	11.0 (36.1)	11.0 (36.1)	11.0 (36.1)
2AZ-FE	2GR-FE	2GR-FE	2GR-FE
16-valve, DOHC with VVT-i	24-valve, DOHC with Dual VVT-i	24-valve, DOHC with Dual VVT-i	24-valve, DOHC with Dual VVT-i
88.5 x 96.0 (3.48 x 3.78)	94.0 x 83.0 (3.70 x 3.27)	94.0 x 83.0 (3.70 x 3.27)	94.0 x 83.0 (3.70 x 3.27)
2362 (144.1)	3456 (210.9)	3456 (210.9)	3456 (210.9)
9.8 : 1	10.8 : 1	10.8 : 1	10.8 : 1
SFI	SFI	SFI	SFI
87 or more	87 or more	87 or more	87 or more
118 / 6000 (158 @ 6000), 116 / 6000 (155 @ 6000)*4	200 / 6200 (268 @ 6200)	200 / 6200 (268 @ 6200)	200 / 6200 (268 @ 6200)
218 / 4000 (161 @ 4000), 214 / 4000 (158 @ 4000)*4	336 / 4700 (248 @ 4700)	336 / 4700 (248 @ 4700)	336 / 4700 (248 @ 4700)
12-55	12-55	12-55	12-55
1200	1200	1200	1200
1.7	1.7	1.7	1.7
—	—	—	—
U250E	U660E	U660E	U660E
3.943*5	3.300	3.300	3.300
2.197*5	1.900	1.900	1.900
1.413*5	1.420	1.420	1.420
0.975*5	1.000	1.000	1.000
0.703*5	0.713	0.713	0.713
—	0.608	0.608	0.608
3.145*5	4.148	4.148	4.148
3.391	3.685*5	3.685*5	3.685*5
Ventilated Disc	Ventilated Disc	Ventilated Disc	Ventilated Disc
Solid Disc	Solid Disc	Solid Disc	Solid Disc
Duo-servo	Duo-servo	Duo-servo	Duo-servo
Single,10”	Single,10”	Single,10”	Single,10”
—	—	—	—
MacPherson Strut	MacPherson Strut	MacPherson Strut	MacPherson Strut
MacPherson Strut	MacPherson Strut	MacPherson Strut	MacPherson Strut
Standard	Standard	Standard	Standard
Standard	Standard	Standard	Standard
Rack & Pinion	Rack & Pinion	Rack & Pinion	Rack & Pinion
Hydraulic Type	Hydraulic Type	Hydraulic Type	Hydraulic Type

- MEMO -