# SECTION TM
# TRANSAXLE & TRANSMISSION



## CONTENTS

### 6MT: RS6F94R


**SYSTEM DESCRIPTION ..... 6**

**M/T SYSTEM ..... 6**
System Diagram .....6
System Description .....7

**DTC/CIRCUIT DIAGNOSIS ..... 8**

**POSITION SWITCH ..... 8**

**BACK-UP LAMP SWITCH .....8**
BACK-UP LAMP SWITCH : Component Parts Location .....8
BACK-UP LAMP SWITCH : Component Inspection .....8

**PARK/NEUTRAL POSITION (PNP) SWITCH .....8**
PARK/NEUTRAL POSITION (PNP) SWITCH : Component Parts Location .....8
PARK/NEUTRAL POSITION (PNP) SWITCH : Component Inspection .....8

**SYMPTOM DIAGNOSIS .....10**

**NOISE, VIBRATION AND HARSHNESS (NVH) TROUBLESHOOTING .....10**
NVH Troubleshooting Chart .....10

**PRECAUTION .....11**

**PRECAUTIONS .....11**
Precaution for Supplemental Restraint System (SRS) "AIR BAG" and "SEAT BELT PRE-TENSIONER" .....11
Service Notice or Precautions for Manual Transaxle .....11
Precautions for Removing of Battery Terminal .....12

**PREPARATION .....13**

**PREPARATION .....13**
Special Service Tools .....13
Commercial Service Tools .....15

**PERIODIC MAINTENANCE .....17**

**GEAR OIL .....17**
Inspection .....17
Draining .....17
Refilling .....17

**REMOVAL AND INSTALLATION .....18**

**SIDE OIL SEAL .....18**
Removal and Installation .....18
Inspection .....18

**CONTROL LINKAGE .....19**
Exploded View .....19
Removal and Installation .....19
Inspection .....21

**AIR BREATHER HOSE .....22**
Exploded View .....22
Removal and Installation .....22

**POSITION SWITCH .....23**
Exploded View .....23
Removal and Installation .....23

**UNIT REMOVAL AND INSTALLATION .....25**

**TRANSAXLE ASSEMBLY .....25**
Exploded View .....25
Removal and Installation .....25
Inspection .....26

**UNIT DISASSEMBLY AND ASSEMBLY ...27**

**TRANSAXLE ASSEMBLY .....27**
Exploded View .....27
Disassembly .....32
Assembly .....37

**INPUT SHAFT AND GEAR** ..... **43**
Exploded View ..... 43
Disassembly ..... 43
Assembly ..... 45
Inspection ..... 47

**MAINSHAFT AND GEAR** ..... **49**
Exploded View ..... 49
Disassembly ..... 49
Assembly ..... 51
Inspection ..... 53

**REVERSE IDLER SHAFT AND GEAR** ..... **55**
Exploded View ..... 55
Disassembly ..... 55
Assembly ..... 56
Inspection ..... 56

**FINAL DRIVE** ..... **58**
Exploded View ..... 58
Disassembly ..... 58
Assembly ..... 59
Inspection ..... 59

**SHIFT FORK AND FORK ROD** ..... **61**
Exploded View ..... 61
Disassembly ..... 61
Assembly ..... 61
Inspection ..... 61

**SERVICE DATA AND SPECIFICATIONS (SDS)** ..... **63**

**SERVICE DATA AND SPECIFICATIONS (SDS)** ..... **63**
General Specification ..... 63

## CVT: RE0F08B

**BASIC INSPECTION** ..... **64**

**DIAGNOSIS AND REPAIR WORK FLOW** ..... **64**
Work Flow ..... 64
Diagnostic Work Sheet ..... 65

**ADDITIONAL SERVICE WHEN REPLACING TCM** ..... **67**
Description ..... 67
Procedure ..... 67

**ADDITIONAL SERVICE WHEN REPLACING TRANSAXLE ASSEMBLY** ..... **68**
Description ..... 68
Procedure ..... 68

**SYSTEM DESCRIPTION** ..... **70**

**CVT SYSTEM** ..... **70**
System Diagram ..... 70
Component Parts Location ..... 71

**MECHANICAL SYSTEM** ..... **73**
Cross-Sectional View ..... 73
System Diagram ..... 74
System Description ..... 74
Component Parts Location ..... 78
Component Description ..... 78

**HYDRAULIC CONTROL SYSTEM** ..... **80**
System Diagram ..... 80
System Description ..... 80
Component Parts Location ..... 81
Component Description ..... 82

**CONTROL SYSTEM** ..... **83**
System Diagram ..... 83
System Description ..... 83
Component Parts Location ..... 85
Component Description ..... 86

**LOCK-UP AND SELECT CONTROL SYSTEM** ... **87**
System Diagram ..... 87
System Description ..... 87
Component Parts Location ..... 88
Component Description ..... 89

**SHIFT CONTROL SYSTEM** ..... **90**
System Diagram ..... 90
System Description ..... 90
Component Parts Location ..... 91
Component Description ..... 92

**SHIFT LOCK SYSTEM** ..... **93**

**WITH INTELLIGENT KEY SYSTEM** ..... **93**
WITH INTELLIGENT KEY SYSTEM : System Description ..... 93
WITH INTELLIGENT KEY SYSTEM : Component Parts Location ..... 94
WITH INTELLIGENT KEY SYSTEM : Component Description ..... 94

**WITHOUT INTELLIGENT KEY SYSTEM** ..... **95**
WITHOUT INTELLIGENT KEY SYSTEM : System Description ..... 95
WITHOUT INTELLIGENT KEY SYSTEM : Component Parts Location ..... 97
WITHOUT INTELLIGENT KEY SYSTEM : Component Description ..... 97

**ON BOARD DIAGNOSTIC (OBD) SYSTEM** .... **98**
Diagnosis Description ..... 98

**DIAGNOSIS SYSTEM (TCM)** ..... **99**
CONSULT Function ..... 99
Diagnostic Tool Function ..... 102

**DTC/CIRCUIT DIAGNOSIS** ..... **103**

**U0100 LOST COMMUNICATION (ECM A)** ..... **103**
Description ..... 103
DTC Logic ..... 103

Diagnosis Procedure ..... 103

**U1000 CAN COMM CIRCUIT ..... 104**
Description ..... 104
DTC Logic ..... 104
Diagnosis Procedure ..... 104

**U1010 CONTROL UNIT (CAN) ..... 105**
Description ..... 105
DTC Logic ..... 105
Diagnosis Procedure ..... 105

**P0703 BRAKE SWITCH B ..... 106**
Description ..... 106
DTC Logic ..... 106
Diagnosis Procedure ..... 106
Component Inspection (Stop Lamp Switch) ..... 108

**P0705 TRANSMISSION RANGE SWITCH A .. 109**
Description ..... 109
DTC Logic ..... 109
Diagnosis Procedure ..... 109
Component Inspection (Transmission Range Switch) ..... 111

**P0710 TRANSMISSION FLUID TEMPERATURE SENSOR A ..... 112**
Description ..... 112
DTC Logic ..... 112
Diagnosis Procedure ..... 113
Component Inspection (CVT Fluid Temperature Sensor) ..... 115

**P0715 INPUT SPEED SENSOR A ..... 116**
Description ..... 116
DTC Logic ..... 116
Diagnosis Procedure ..... 116

**P0720 OUTPUT SPEED SENSOR ..... 119**
Description ..... 119
DTC Logic ..... 119
Diagnosis Procedure ..... 119

**P0725 ENGINE SPEED ..... 122**
Description ..... 122
DTC Logic ..... 122
Diagnosis Procedure ..... 122

**P0740 TORQUE CONVERTER ..... 123**
Description ..... 123
DTC Logic ..... 123
Diagnosis Procedure ..... 124
Component Inspection (Torque Converter Clutch Solenoid Valve) ..... 125

**P0744 TORQUE CONVERTER ..... 126**
Description ..... 126
DTC Logic ..... 126
Diagnosis Procedure ..... 126
Component Inspection (Torque Converter Clutch Solenoid Valve) ..... 127
Component Inspection (Lock-up Select Solenoid Valve) ..... 127

**P0745 PRESSURE CONTROL SOLENOID A. 129**
Description ..... 129
DTC Logic ..... 129
Diagnosis Procedure ..... 129
Component Inspection (Line Pressure Solenoid Valve) ..... 130

**P0746 PRESSURE CONTROL SOLENOID A. 131**
Description ..... 131
DTC Logic ..... 131
Diagnosis Procedure ..... 131
Component Inspection (Line Pressure Solenoid Valve) ..... 132

**P0776 PRESSURE CONTROL SOLENOID B. 133**
Description ..... 133
DTC Logic ..... 133
Diagnosis Procedure ..... 133
Component Inspection (Secondary Pressure Solenoid Valve) ..... 134

**P0778 PRESSURE CONTROL SOLENOID B. 135**
Description ..... 135
DTC Logic ..... 135
Diagnosis Procedure ..... 135
Component Inspection (Secondary Pressure Solenoid Valve) ..... 136

**P0840 TRANSMISSION FLUID PRESSURE SEN/SW A ..... 137**
Description ..... 137
DTC Logic ..... 137
Diagnosis Procedure ..... 137

**P0841 TRANSMISSION FLUID PRESSURE SEN/SW A ..... 139**
Description ..... 139
DTC Logic ..... 139
Diagnosis Procedure ..... 139
Component Inspection (Line Pressure Solenoid Valve) ..... 140
Component Inspection (Secondary Pressure Solenoid Valve) ..... 140

**P0868 TRANSMISSION FLUID PRESSURE . 141**
Description ..... 141
DTC Logic ..... 141
Diagnosis Procedure ..... 141
Component Inspection (Line Pressure Solenoid Valve) ..... 142
Component Inspection (Secondary Pressure Solenoid Valve) ..... 142

**P1701 TCM ..... 144**
Description ..... 144
DTC Logic ..... 144
Diagnosis Procedure ..... 144

**P1705 TP SENSOR** ..... **147**
Description .....147
DTC Logic .....147
Diagnosis Procedure .....147

**P1709 INCOMPLETED DATA WRITING** ..... **148**
Description .....148
DTC Logic .....148
Diagnosis Procedure .....148

**P1722 VEHICLE SPEED** ..... **150**
Description .....150
DTC Logic .....150
Diagnosis Procedure .....150

**P1723 SPEED SENSOR** ..... **151**
Description .....151
DTC Logic .....151
Diagnosis Procedure .....151

**P1726 THROTTLE CONTROL SIGNAL** ..... **153**
Description .....153
DTC Logic .....153
Diagnosis Procedure .....153

**P1740 SELECT SOLENOID** ..... **154**
Description .....154
DTC Logic .....154
Diagnosis Procedure .....155
Component Inspection (Lock-up Select Solenoid Valve) .....155

**P1777 STEP MOTOR** ..... **157**
Description .....157
DTC Logic .....157
Diagnosis Procedure .....157
Component Inspection (Step Motor) .....158

**P1778 STEP MOTOR** ..... **160**
Description .....160
DTC Logic .....160
Diagnosis Procedure .....160

**OVERDRIVE CONTROL SWITCH** ..... **162**
Description .....162
Component Function Check .....162
Diagnosis Procedure .....162
Component Inspection (Overdrive Control Switch) ..164

**SHIFT POSITION INDICATOR CIRCUIT** ..... **165**
Description .....165
Component Function Check .....165
Diagnosis Procedure .....165

**SHIFT LOCK SYSTEM** ..... **166**
Description .....166
Wiring Diagram - SHIFT LOCK SYSTEM - .....167
Component Function Check .....169
Diagnosis Procedure .....170
Component Inspection (Stop Lamp Switch) .....172
Component Inspection (Shift Lock Solenoid) ..... 173
Component Inspection (Park Position Switch) ..... 173

**ECU DIAGNOSIS INFORMATION** ..... **174**

**TCM** ..... **174**
Reference Value ..... 174
Wiring Diagram - CVT CONTROL SYSTEM - ..... 179
Fail-safe ..... 184
DTC Inspection Priority Chart ..... 186
DTC Index ..... 186

**SYMPTOM DIAGNOSIS** ..... **188**

**SYSTEM SYMPTOM** ..... **188**
Symptom Table ..... 188

**PRECAUTION** ..... **200**

**PRECAUTIONS** ..... **200**
Precaution for Supplemental Restraint System (SRS) "AIR BAG" and "SEAT BELT PRE-TENSIONER" ..... 200
Precaution for Procedure without Cowl Top Cover. 200
Precautions for Removing of Battery Terminal .... 201
Precaution for On Board Diagnosis (OBD) System of CVT and Engine ..... 201
Precaution for TCM and Transaxle Assembly Replacement ..... 201
Precaution ..... 201
Removal and Installation Procedure for CVT Unit Connector ..... 202
Service Notice or Precaution ..... 203
ATFTEMP COUNT Conversion Table ..... 203

**PREPARATION** ..... **205**

**PREPARATION** ..... **205**
Special Service Tools ..... 205
Commercial Service Tools ..... 205

**PERIODIC MAINTENANCE** ..... **206**

**CVT FLUID** ..... **206**
Inspection ..... 206
Changing ..... 207

**STALL TEST** ..... **208**
Inspection and Judgment ..... 208

**LINE PRESSURE TEST** ..... **209**
Inspection and Judgment ..... 209

**ROAD TEST** ..... **211**
Description ..... 211
Check before Engine Is Started ..... 211
Check at Idle ..... 211
Cruise Test ..... 212

**CVT POSITION** ..... **215**
Inspection and Adjustment ..... 215

REMOVAL AND INSTALLATION ..... 216

CVT SHIFT SELECTOR ..... 216
Exploded View ..... 216
Removal and Installation ..... 216
Disassembly and Assembly ..... 218
Inspection ..... 218

CONTROL CABLE ..... 219
Exploded View ..... 219
Removal and Installation ..... 219
Inspection ..... 220

KEY INTERLOCK CABLE ..... 221
Exploded View ..... 221
Removal and Installation ..... 221
Inspection ..... 222

TCM ..... 223
Exploded View ..... 223
Removal and Installation ..... 223
Adjustment ..... 223

AIR BREATHER HOSE ..... 224
Removal and Installation ..... 224

OIL PAN ..... 225
Exploded View ..... 225
Removal and Installation ..... 225
Inspection ..... 226

PRIMARY SPEED SENSOR ..... 227
Exploded View ..... 227
Removal and Installation ..... 227
Inspection ..... 227

SECONDARY SPEED SENSOR ..... 228
Exploded View ..... 228
Removal and Installation ..... 228
Inspection ..... 228

DIFFERENTIAL SIDE OIL SEAL ..... 229
Exploded View ..... 229
Removal and Installation ..... 229
Inspection ..... 229

CVT OIL WARMER SYSTEM ..... 230

WATER HOSE ..... 230
WATER HOSE : Exploded View ..... 230
WATER HOSE : Removal and Installation ..... 230
WATER HOSE : Inspection ..... 231

CVT FLUID COOLER HOSE ..... 231
CVT FLUID COOLER HOSE : Exploded View ..... 231
CVT FLUID COOLER HOSE : Removal and Installation ..... 232
CVT FLUID COOLER HOSE : Inspection ..... 233

CVT OIL WARMER ..... 233
CVT OIL WARMER : Exploded View ..... 234
CVT OIL WARMER : Removal and Installation ..... 234
CVT OIL WARMER : Inspection ..... 234

UNIT REMOVAL AND INSTALLATION ... 235

TRANSAXLE ASSEMBLY ..... 235
Exploded View ..... 235
Removal and Installation ..... 235
Inspection and Adjustment ..... 237

UNIT DISASSEMBLY AND ASSEMBLY . 239

TORQUE CONVERTER ..... 239
Disassembly ..... 239
Assembly ..... 239
Inspection ..... 239

SERVICE DATA AND SPECIFICATIONS (SDS) ..... 240

SERVICE DATA AND SPECIFICATIONS (SDS) ..... 240
General Specification ..... 240
Vehicle Speed When Shifting Gears ..... 240
Stall Speed ..... 240
Line Pressure ..... 240
Torque Converter ..... 240

# SYSTEM DESCRIPTION

## M/T SYSTEM

### System Diagram

INFOID:0000000009948855

CROSS-SECTIONAL VIEW

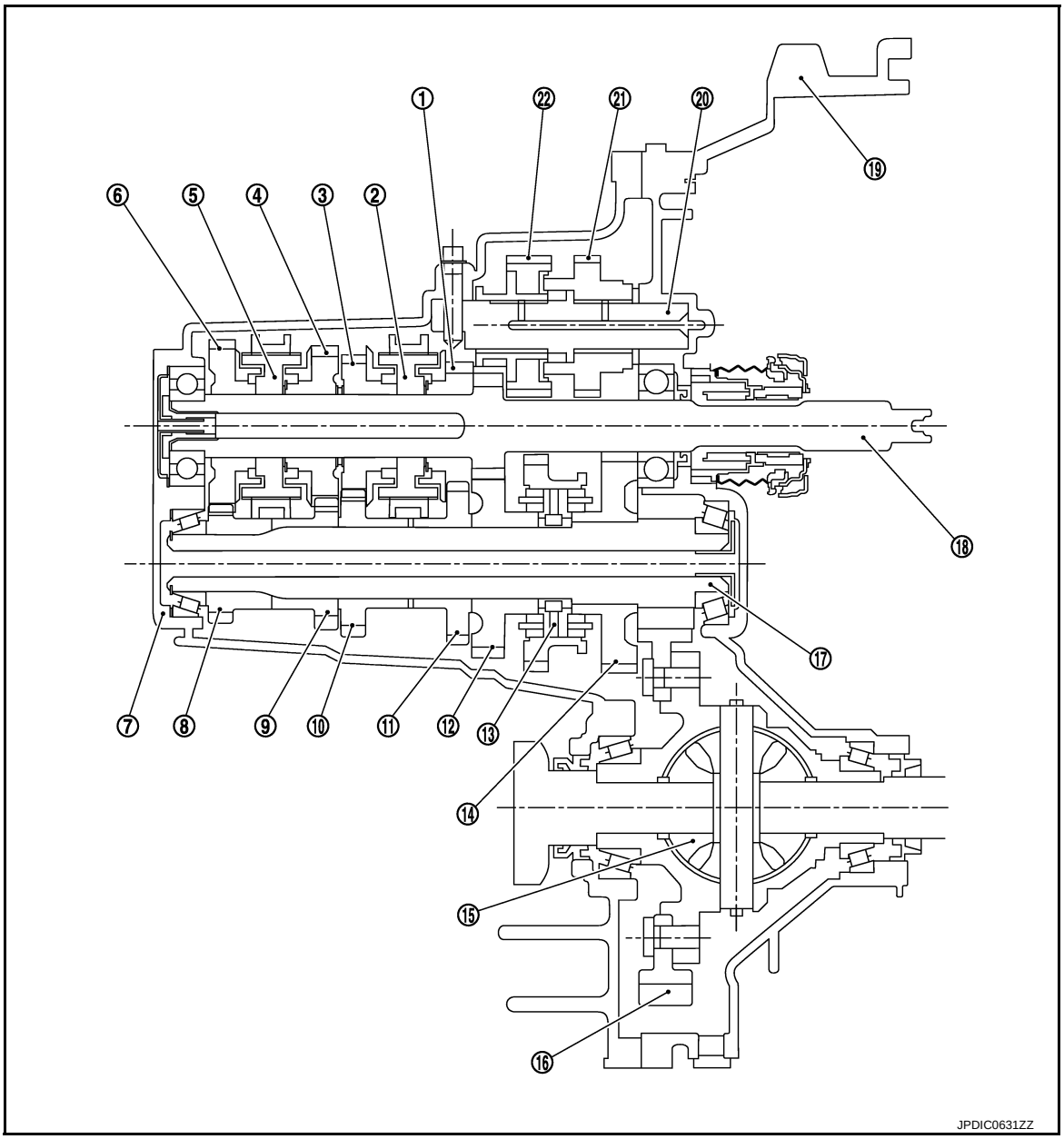


| | | |
|---|---|---|
| 1. 3rd input gear | 2. 3rd-4th synchronizer hub assembly | 3. 4th input gear |
| 4. 5th input gear | 5. 5th-6th synchronizer hub assembly | 6. 6th input gear |
| 7. Transaxle case | 8. 6th main gear | 9. 5th main gear |
| 10. 4th main gear | 11. 3rd main gear | 12. 2nd main gear |
| 13. 1st-2nd synchronizer hub assembly | 14. 1st main gear | 15. Differential |
| 16. Final gear | 17. Mainshaft | 18. Input shaft |
| 19. Clutch housing | 20. Reverse idler shaft | 21. Reverse input gear |
| 22. Reverse output gear | | |

## System Description

INFOID:0000000009948856

### TRIPLE-CONE SYNCHRONIZER

Triple-cone synchronizer are adopted for the 1st and the 2nd gears to reduce operating force of the shifter lever.

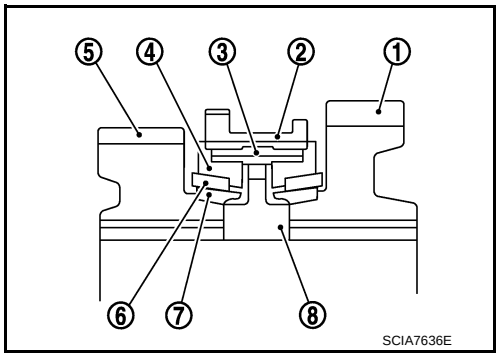


1 : 1st main gear
2 : 1st-2nd coupling sleeve
3 : Insert key
4 : Outer baulk ring
5 : 2nd main gear
6 : Synchronizer cone
7 : Inner baulk ring
8 : 1st-2nd synchronizer hub

### REVERSE GEAR NOISE PREVENTION FUNCTION (SYNCHRONIZING METHOD)

Reverse gear assembly consists of reverse input gear, return spring, reverse baulk ring, and reverse output gear. When the shifter lever is shifted to the reverse position, the construction allows smooth shift operation by stopping the reverse idler shaft rotation by frictional force of synchronizer.

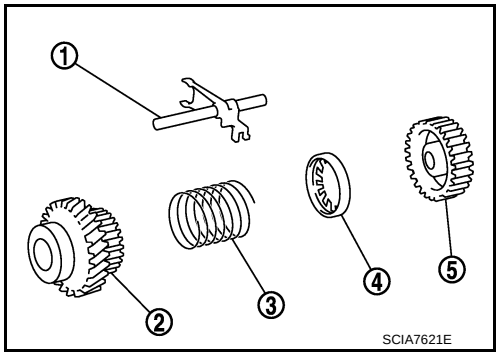


1 : Reverse fork rod
2 : Reverse output gear
3 : Return spring
4 : Reverse baulk ring
5 : Reverse input gear

# DTC/CIRCUIT DIAGNOSIS

## POSITION SWITCH

### BACK-UP LAMP SWITCH

#### BACK-UP LAMP SWITCH : Component Parts Location

INFOID:0000000009948857

1 : Position switch

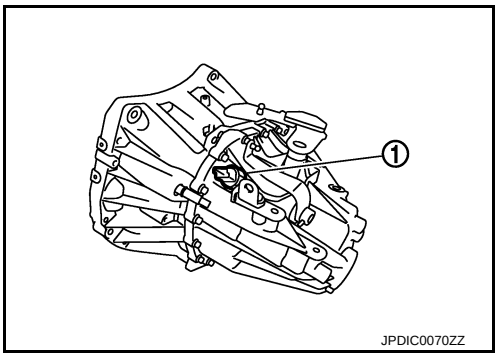


#### BACK-UP LAMP SWITCH : Component Inspection

INFOID:0000000009948858

**1.** CHECK BACK-UP LAMP SWITCH

1. Disconnect position switch connector. Refer to TM-23, "Removal and Installation".
2. Check continuity between position switch terminals.

| Terminals | | Condition | Continuity |
|---|---|---|---|
| 1 | 2 | Reverse gear position | Existed |
| | | Except reverse gear position | Not existed |

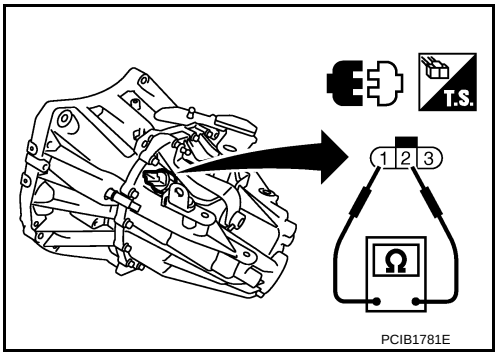


Is the inspection result normal?

YES >> INSPECTION END
NO >> Replace position switch. Refer to TM-23, "Removal and Installation".

### PARK/NEUTRAL POSITION (PNP) SWITCH

#### PARK/NEUTRAL POSITION (PNP) SWITCH : Component Parts Location

INFOID:0000000009948859

1 : Position switch

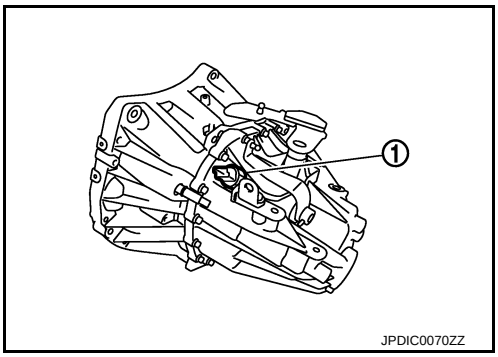


#### PARK/NEUTRAL POSITION (PNP) SWITCH : Component Inspection

INFOID:0000000009948860

**1.** CHECK PARK/NEUTRAL POSITION (PNP) SWITCH

1. Disconnect position switch connector. Refer to TM-23, "Removal and Installation".

2. Check continuity between position switch terminals.

| Terminals | | Condition | Continuity |
|---|---|---|---|
| 2 | 3 | Neutral gear position | Existed |
| | | Except neutral gear position | Not existed |

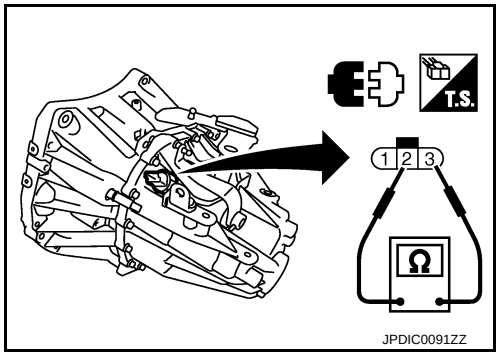


Is the inspection result normal?

YES >> INSPECTION END

NO >> Replace position switch. Refer to TM-23, "Removal and Installation".

# SYMPTOM DIAGNOSIS

## NOISE, VIBRATION AND HARSHNESS (NVH) TROUBLESHOOTING

### NVH Troubleshooting Chart

INFOID:0000000009948861

Use the chart below to find the cause of the symptom. The numbers indicate the order of the inspection. If necessary, repair or replace these parts.

| SUSPECTED PARTS (Possible cause) | | OIL (Oil level is low) | OIL (Wrong oil) | OIL (Oil level is high) | GASKET (Damaged) | OIL SEAL (Worn or damaged) | O-RING (Worn or damaged) | SHIFT CONTROL LINKAGE (Worn) | SHIFT FORK (Worn) | GEAR (Worn or damaged) | BEARING (Worn or damaged) | BAULK RING (Worn or damaged) | INSERT SPRING (Damaged) |
|---|---|---|---|---|---|---|---|---|---|---|---|---|---|
| Reference | | | TM-17 | | | TM-27 | | TM-19 | TM-27 | | TM-27 | | |
| Symptoms | Noise | 1 | 2 | | | | | | | 3 | 3 | | |
| | Oil leakage | | 3 | 1 | 2 | 2 | 2 | | | | | | |
| | Hard to shift or will not shift | | 1 | 1 | | | | 2 | | | | 3 | 3 |
| | Jumps out of gear | | | | | | | 1 | 2 | 2 | | | |

# PRECAUTION

## PRECAUTIONS

### Precaution for Supplemental Restraint System (SRS) "AIR BAG" and "SEAT BELT PRE-TENSIONER"

INFOID:0000000009948862

The Supplemental Restraint System such as “AIR BAG” and “SEAT BELT PRE-TENSIONER”, used along with a front seat belt, helps to reduce the risk or severity of injury to the driver and front passenger for certain types of collision. This system includes seat belt switch inputs and dual stage front air bag modules. The SRS system uses the seat belt switches to determine the front air bag deployment, and may only deploy one front air bag, depending on the severity of a collision and whether the front occupants are belted or unbelted. Information necessary to service the system safely is included in the “SRS AIR BAG” and “SEAT BELT” of this Service Manual.

**WARNING:**

**Always observe the following items for preventing accidental activation.**

- **To avoid rendering the SRS inoperative, which could increase the risk of personal injury or death in the event of a collision that would result in air bag inflation, all maintenance must be performed by an authorized NISSAN/INFINITI dealer.**
- **Improper maintenance, including incorrect removal and installation of the SRS, can lead to personal injury caused by unintentional activation of the system. For removal of Spiral Cable and Air Bag Module, see “SRS AIR BAG”.**
- **Never use electrical test equipment on any circuit related to the SRS unless instructed to in this Service Manual. SRS wiring harnesses can be identified by yellow and/or orange harnesses or harness connectors.**

### PRECAUTIONS WHEN USING POWER TOOLS (AIR OR ELECTRIC) AND HAMMERS

**WARNING:**

**Always observe the following items for preventing accidental activation.**

- **When working near the Air Bag Diagnosis Sensor Unit or other Air Bag System sensors with the ignition ON or engine running, never use air or electric power tools or strike near the sensor(s) with a hammer. Heavy vibration could activate the sensor(s) and deploy the air bag(s), possibly causing serious injury.**
- **When using air or electric power tools or hammers, always switch the ignition OFF, disconnect the battery, and wait at least 3 minutes before performing any service.**

### Service Notice or Precautions for Manual Transaxle

INFOID:0000000009948863

**CAUTION:**

- **Never reuse CSC (Concentric Slave Cylinder). Because CSC slides back to the original position every time when removing transaxle assembly. At this timing, dust on the sliding parts may damage a seal of CSC and may cause clutch fluid leakage. CL-17, "Removal and Installation".**
- **Never reuse transaxle gear oil, once it has been drained.**
- **Check oil level or replace gear oil with vehicle on level surface.**
- **During removal or installation, keep inside of transaxle clear of dust or dirt.**
- **Check for the correct installation status prior to removal or disassembly. If matching marks are required, be certain they never interfere with the function of the parts they are applied.**
- **In principle, tighten bolts or nuts gradually in several steps working diagonally from inside to outside. If tightening sequence is specified, use it.**
- **Never damage sliding surfaces and mating surfaces.**

## Precautions for Removing of Battery Terminal

INFOID:0000000010078184

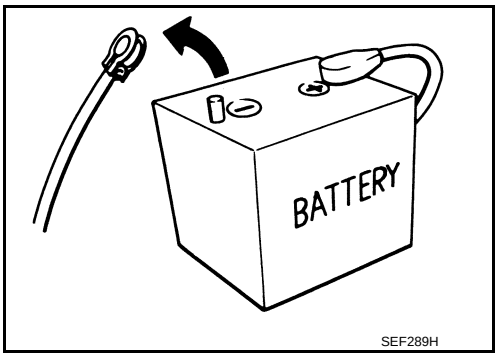


- When removing the 12V battery terminal, turn OFF the ignition switch and wait at least 30 seconds.
  **NOTE:**
  ECU may be active for several tens of seconds after the ignition switch is turned OFF. If the battery terminal is removed before ECU stops, then a DTC detection error or ECU data corruption may occur.
- For vehicles with the 2-batteries, be sure to connect the main battery and the sub battery before turning ON the ignition switch.
  **NOTE:**
  If the ignition switch is turned ON with any one of the terminals of main battery and sub battery disconnected, then DTC may be detected.
- After installing the 12V battery, always check "Self Diagnosis Result" of all ECUs and erase DTC.
  **NOTE:**
  The removal of 12V battery may cause a DTC detection error.

# PREPARATION

## PREPARATION

### Special Service Tools

INFOID:0000000009948864

The actual shapes of Kent-Moore tools may differ from those of special service tools illustrated here.

| Tool number<br>(Kent-Moore No.)<br>Tool name | Description |
|---|---|
| KV381054S0<br>(J-34286)<br>Puller<br> 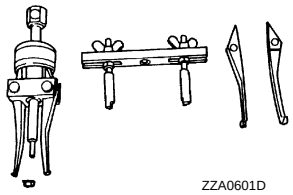 <br>ZZA0601D | Removing mainshaft front bearing outer race |
| KV38100200<br>( - )<br>Drift<br>a: 65 mm (2.56 in) dia.<br>b: 49 mm (1.93 in) dia.<br> 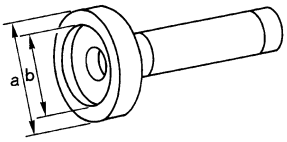 <br><br>ZZA1143D | • Installing mainshaft front bearing outer race<br>• Installing mainshaft rear bearing outer race<br>• Installing differential side bearing outer race (clutch housing side) |
| ST33220000<br>( - )<br>Drift<br>a: 37 mm (1.46 in) dia.<br>b: 31 mm (1.22 in) dia.<br>c: 22 mm (0.87 in) dia.<br> 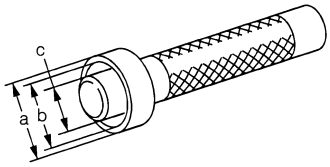 <br><br>ZZA1046D | Installing input shaft oil seal |
| ST33400001<br>(J-26082)<br>Drift<br>a: 60 mm (2.36 in) dia.<br>b: 47 mm (1.85 in) dia.<br> 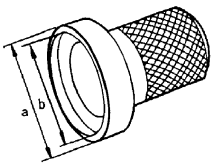 <br><br>ZZA0814D | Installing differential side bearing outer race (transaxle case side) |
| KV32500QAA<br>( - )<br>(Renault SST: B.vi 1666)<br>Drift set<br>1. —<br>( - )<br>(Stamping number: B.vi 1666-A)<br>Drift<br>a: 54.3 mm (2.138 in) dia.<br>b: 45 mm (1.77 in) dia.<br>c: 26.6 mm (1.047 in) dia.<br>2. —<br>( - )<br>(Stamping number: B.vi 1666-B)<br>Drift<br>d: 54 mm (2.13 in) dia.<br>e: 48.6 mm (1.913 in) dia.<br>f: 26.6 mm (1.047 in) dia.<br> 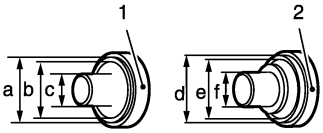 <br><br>JPDIC0730ZZ | Installing differential side oil seal |

| Tool number<br>(Kent-Moore No.)<br>Tool name | Description |
|---|---|
| ST36720030<br>( - )<br>Drift<br>a: 70 mm (2.76 in) dia.<br>b: 40 mm (1.57 in) dia.<br>c: 29 mm (1.14 in) dia.<br> 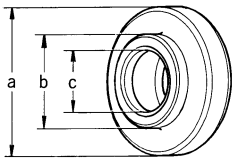 <br>ZZA0978D | • Installing input shaft rear bearing<br>• Installing mainshaft front bearing inner race |
| ST33052000<br>( - )<br>Drift<br>a: 22 mm (0.87 in) dia.<br>b: 28 mm (1.10 in) dia.<br> 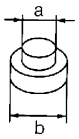 <br>ZZA0969D | • Removing mainshaft rear bearing inner race<br>• Removing 6th main gear<br>• Removing 5th main gear<br>• Removing 4th main gear<br>• Removing 1st main gear<br>• Removing 1st-2nd synchronizer hub assembly<br>• Removing 2nd main gear<br>• Removing bushing<br>• Removing 3rd main gear<br>• Removing mainshaft front bearing inner race |
| KV32102700<br>( - )<br>Drift<br>a: 48.6 mm (1.913 in) dia.<br>b: 41.6 mm (1.638 in) dia.<br> 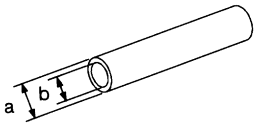 <br>S-NT065 | • Installing bushing<br>• Installing 2nd main gear<br>• Installing 3rd main gear<br>• Installing 4th main gear<br>• Installing 5th main gear<br>• Installing 6th main gear |
| ST30901000<br>(J-26010-01)<br>Drift<br>a: 79 mm (3.11 in) dia.<br>b: 45 mm (1.77 in) dia.<br>c: 35.2 mm (1.386 in) dia.<br> 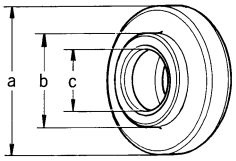 <br>ZZA0978D | Installing mainshaft rear bearing inner race |
| ST33061000<br>(J-8107-2)<br>Drift<br>a: 28.5 mm (1.122 in) dia.<br>b: 38 mm (1.50 in) dia.<br> 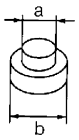 <br>ZZA0969D | Removing differential side bearing inner race (clutch housing side) |
| KV32300QAM<br>( - )<br>(Renault SST: B.vi 1823)<br>Drift<br> 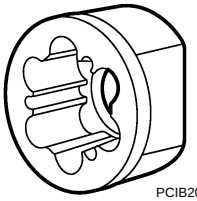 <br>PCIB2078J | Removing and installing input shaft rear bearing mounting bolt |

## Commercial Service Tools

INFOID:0000000009948865

| Tool name | Description |
|---|---|
| Socket<br>a: 8 mm (0.31 in)<br>b: 5 mm (0.20 in)<br> 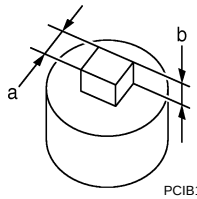 <br>PCIB1776E | Removing and installing drain plug |
| Spacer<br>a: 25 mm (0.98 in) dia.<br>b: 25 mm (0.98 in)<br> 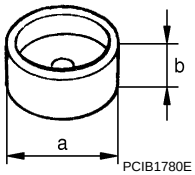 <br>PCIB1780E | Removing mainshaft front bearing outer race |
| Drift<br>a: 17 mm (0.67 in) dia.<br> 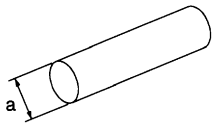 <br>S-NT063 | Installing bushing |
| Drift<br>a: 24 mm (0.94 in) dia.<br> 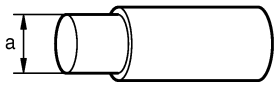 <br>PCIB1779E | Removing input shaft rear bearing |
| Drift<br>a: 35 mm (1.38 in) dia.<br>b: 25 mm (0.98 in) dia.<br> 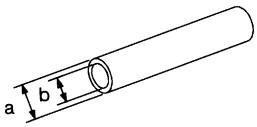 <br>S-NT065 | Installing input shaft front bearing |
| Drift<br>a: 43 mm (1.69 in) dia.<br> 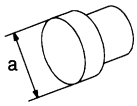 <br>NT109 | • Installing input shaft rear bearing<br>• Removing differential side bearing inner race (transaxle case side) |

| Tool name | Description |
|---|---|
| Drift<br>a: 45 mm (1.77 in) dia.<br>b: 39 mm (1.54 in) dia.<br> 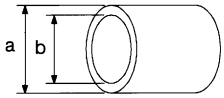 <br><br>S-NT474 | Installing differential side bearing inner race (clutch housing side) |
| Drift<br>a: 52 mm (2.05 in) dia.<br>b: 45 mm (1.77 in) dia.<br> 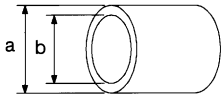 <br><br>S-NT474 | Installing differential side bearing inner race (transaxle case side) |
| Puller<br> 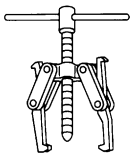 <br>NT077 | • Removing differential side bearing inner race (clutch housing side)<br>• Removing differential side bearing inner race (transaxle case side) |
| Puller<br> 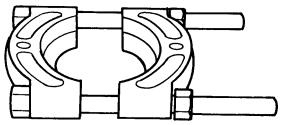 <br>ZZB0823D | • Removing differential side bearing inner race (clutch housing side)<br>• Removing differential side bearing inner race (transaxle case side)<br>• Removing input shaft rear bearing<br>• Removing input shaft front bearing<br>• Removing mainshaft rear bearing inner race<br>• Removing 6th main gear<br>• Removing 4th main gear<br>• Removing 5th main gear<br>• Removing 1st main gear<br>• Removing 1st-2nd synchronizer hub assembly<br>• Removing 2nd main gear<br>• Removing 3rd main gear<br>• Removing mainshaft front bearing inner race |
| Remover<br> <br>S-NT134 | • Removing bushing<br>• Removing mainshaft rear bearing outer race |
| Power tool<br> 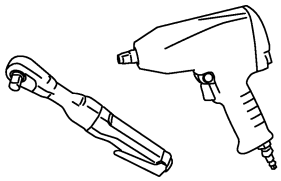 <br>PBIC0190E | Loosening bolts and nuts |

# PERIODIC MAINTENANCE

## GEAR OIL

### Inspection

INFOID:0000000009948866

#### OIL LEAKAGE

Make sure that gear oil is not leaking from transaxle or around it.

#### OIL LEVEL

1. Remove filler plug (1) and gasket from transaxle case.
2. Check the oil level from filler plug mounting hole as shown in the figure.
   **CAUTION:**
   **Never start engine while checking oil level.**
3. Set a gasket on filler plug and then install it to transaxle case.
   **CAUTION:**
   **Never reuse gasket.**
4. Tighten filler plug to the specified torque. Refer to TM-27, "Exploded View".

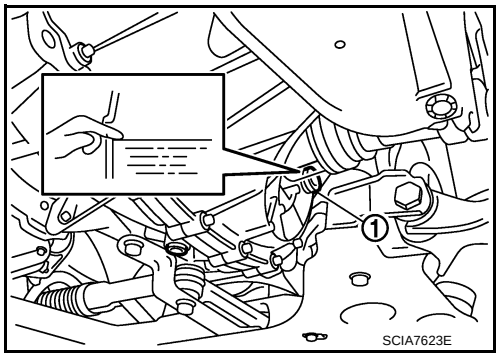


### Draining

INFOID:0000000009948867

1. Start engine and let it run to warm up transaxle.
2. Stop engine. Remove drain plug (1) and gasket, using a socket [Commercial service tool] and then drain gear oil.
3. Set a gasket on drain plug and install it to clutch housing, using a socket [Commercial service tool].
   **CAUTION:**
   **Never reuse gasket.**
4. Tighten drain plug to the specified torque. Refer to TM-27, "Exploded View".

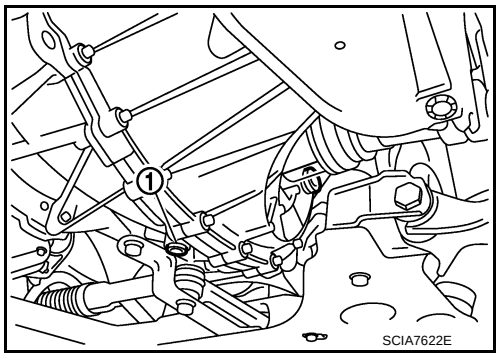


### Refilling

INFOID:0000000009948868

1. Remove filler plug (1) and gasket from transaxle case.
2. Fill with new gear oil until oil level reaches the specified limit at filler plug mounting hole as shown in the figure.

| | |
|---|---|
| **Oil grade and viscosity** | **: Refer to MA-10, "Fluids and Lubricants".** |
| **Oil capacity** | **: Refer to TM-63, "General Specification".** |

3. After refilling gear oil, check the oil level. Refer to TM-17, "Inspection".
4. Set a gasket on filler plug and then install it to transaxle case.
   **CAUTION:**
   **Never reuse gasket.**
5. Tighten filler plug to the specified torque. Refer to TM-27, "Exploded View".

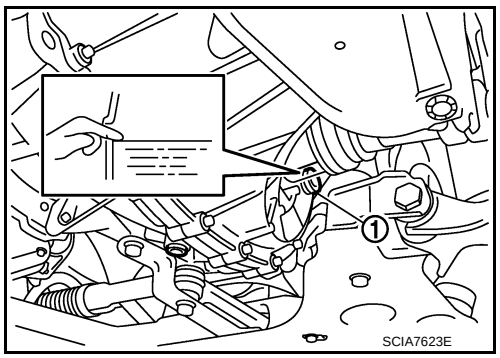

# REMOVAL AND INSTALLATION

## SIDE OIL SEAL

### Removal and Installation

INFOID:0000000009948869

#### REMOVAL

1. Remove front drive shafts. Refer to FAX-16, "LEFT SIDE : Removal and Installation" (LH) and FAX-17, "RIGHT SIDE : Removal and Installation" (RH).
2. Remove differential side oil seals (1) from clutch housing and transaxle case, using a suitable tool.
   **CAUTION:**
   **Never damage transaxle case and clutch housing.**

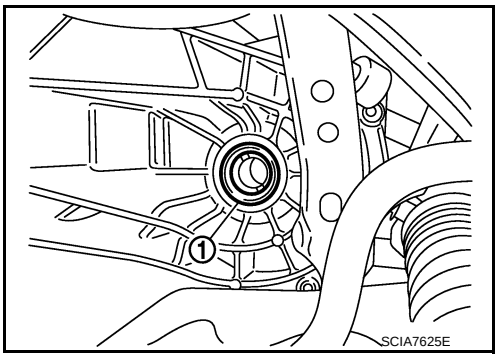


#### INSTALLATION

Note the following, and install in the reverse order of removal.

- Install differential side oil seals (1) to clutch housing and transaxle case, using the drift [Stamping number: B.vi 1666-B] of the drift set [SST: KV32500QAA ( - )].

A : Transaxle case side
B : Clutch housing side

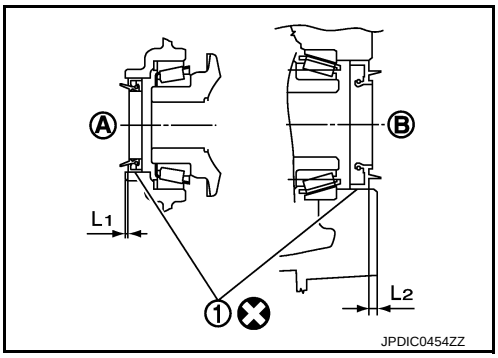


**Dimension "$L_1$" : 1.2 – 1.8 mm (0.047 – 0.071 in)**
**Dimension "$L_2$" : 2.7 – 3.3 mm (0.106 – 0.130 in)**

**CAUTION:**
- **Never incline differential side oil seal.**
- **Never damage clutch housing and transaxle case.**

### Inspection

INFOID:0000000009948870

#### INSPECTION AFTER INSTALLATION

Check the oil leakage and the oil level. Refer to TM-17, "Inspection".

# CONTROL LINKAGE

## Exploded View

INFOID:0000000009948871

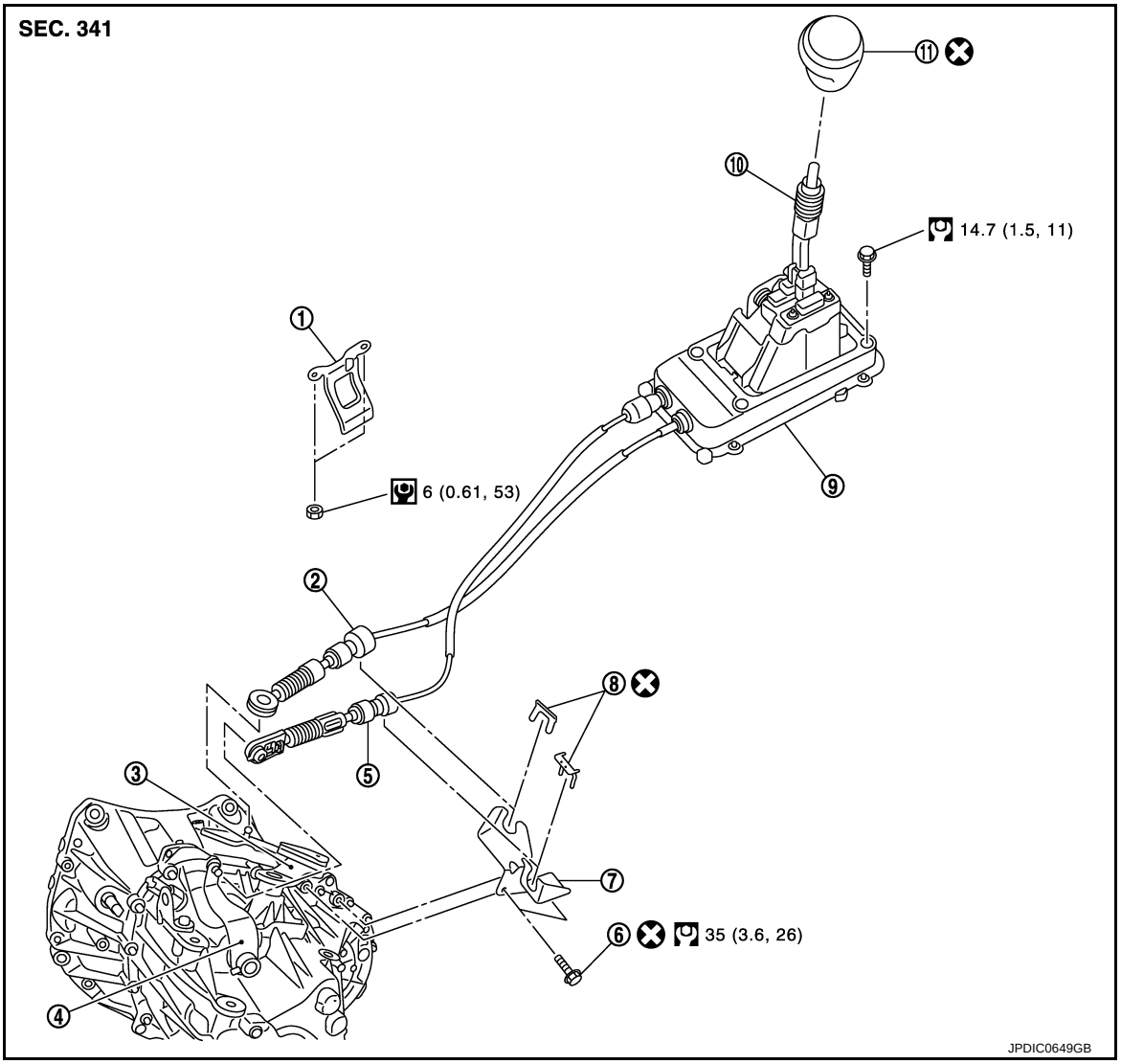


| | | |
|---|---|---|
| 1. Bracket | 2. Shifter cable | 3. Shifter lever A |
| 4. Selector lever | 5. Selector cable | 6. Tapping bolt |
| 7. Cable mounting bracket | 8. Lock plate | 9. M/T shift selector |
| 10. Shifter lever | 11. Shifter lever knob | |

Refer to GI-4, "Components" for the symbols in the figure.

## Removal and Installation

INFOID:0000000009948872

### REMOVAL

1. Pull the shifter lever knob upward to remove.
2. Remove center console assembly. Refer to IP-23, "Removal and Installation".
3. Remove harness clips.
4. Shift the shifter lever in the neutral position.
5. Remove mounting bolts of the M/T shift selector.
6. Remove air duct (inlet). Refer to EM-24, "Removal and Installation".
7. Remove battery. Refer to PG-82, "Removal and Installation".

8. Remove clips from the air duct and air cleaner case. TM-22, "Removal and Installation".
9. Remove air cleaner case and air ducts. Refer to EM-24, "Removal and Installation".
10. Pull out and disconnect the each cable from the shifter lever A and the selector lever, using a suitable remover.
11. Remove each lock plate upward to disconnect the each cable from the cable mounting bracket.
12. Remove cable mounting bracket from the transaxle case.
13. Remove center muffler, exhaust front tube, and heat plate. Refer to EX-5, "Removal and Installation".
14. Remove bracket from the vehicle.
15. Release the tabs (A) on the front and back of the M/T shift selector (1) to remove the M/T shift selector from under the vehicle.

⇦ : Vehicle front

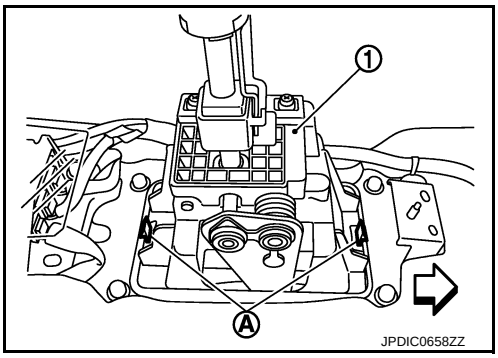


## INSTALLATION

Note the following, and install in the reverse order of removal.

- To install the shifter lever knob, press it into the shifter lever.
  **CAUTION:**
  - **Never reuse shifter lever knob.**
  - **Be careful with orientation of shifter lever knob.**
- Shift the shifter lever in the neutral position.
- Tapping work for tapping bolts is not applied to new transaxle case. Do not perform tapping by other than screwing tapping bolts because tapping is formed by screwing tapping bolts into transaxle case.
  **CAUTION:**
  **Never reuse tapping bolt.**
- Shift the shifter lever A in the neutral position.
- Insert the each cable until it reaches the shifter lever A and the selector lever.
- The lock plate (1) which fixes the selector cable (2) has an indentation (⬅). Never confuse the lock plate with the lock plate (3) which fixes the shifter cable (4).

⇦ : Vehicle front

- Insert the each lock plate until it reaches the cable mounting bracket.

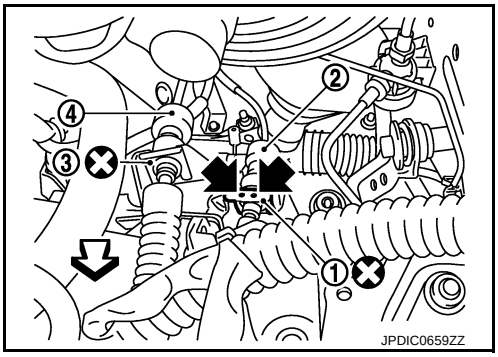


Install the selector cable according to the following instructions.

1. Install the selector cable (1) on the cable mounting bracket to install the lock plate.
2. Install the selector cable on the selector lever (2).
3. Slide the stopper (3) in the direction of the arrow (A) shown in the figure.
4. Press the lock (4) in the direction of the arrow (B) shown in the figure.
   **CAUTION:**
   **Never move the selector lever.**
5. Side the stopper in the direction of the arrow (C) shown in the figure.
   **CAUTION:**
   **Never move the selector lever.**

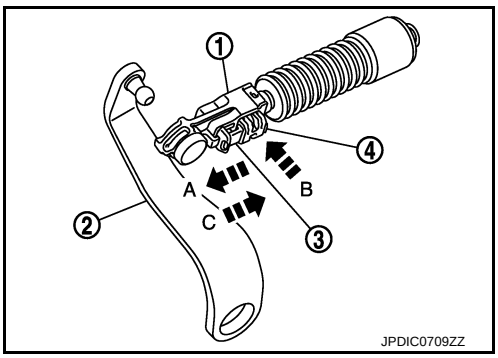

## Inspection

INFOID:0000000009948873

### INSPECTION AFTER INSTALLATION

- Check that the shifter lever knob maintains its position.
- Operate the shifter lever in each position to check that the shifter lever smoothly operates without any complication, snag, noise, backlash, or interference. If any malfunction is fund, repair malfunctioning parts or replace the M/T shift selector.
- Check that the shifter lever automatically and smoothly returns to the neutral position when selecting the 1st-2nd side and the 5th-6th side. If any malfunction is fund, repair malfunctioning parts or replace the M/T shift selector.

# AIR BREATHER HOSE

## Exploded View

INFOID:0000000009948874

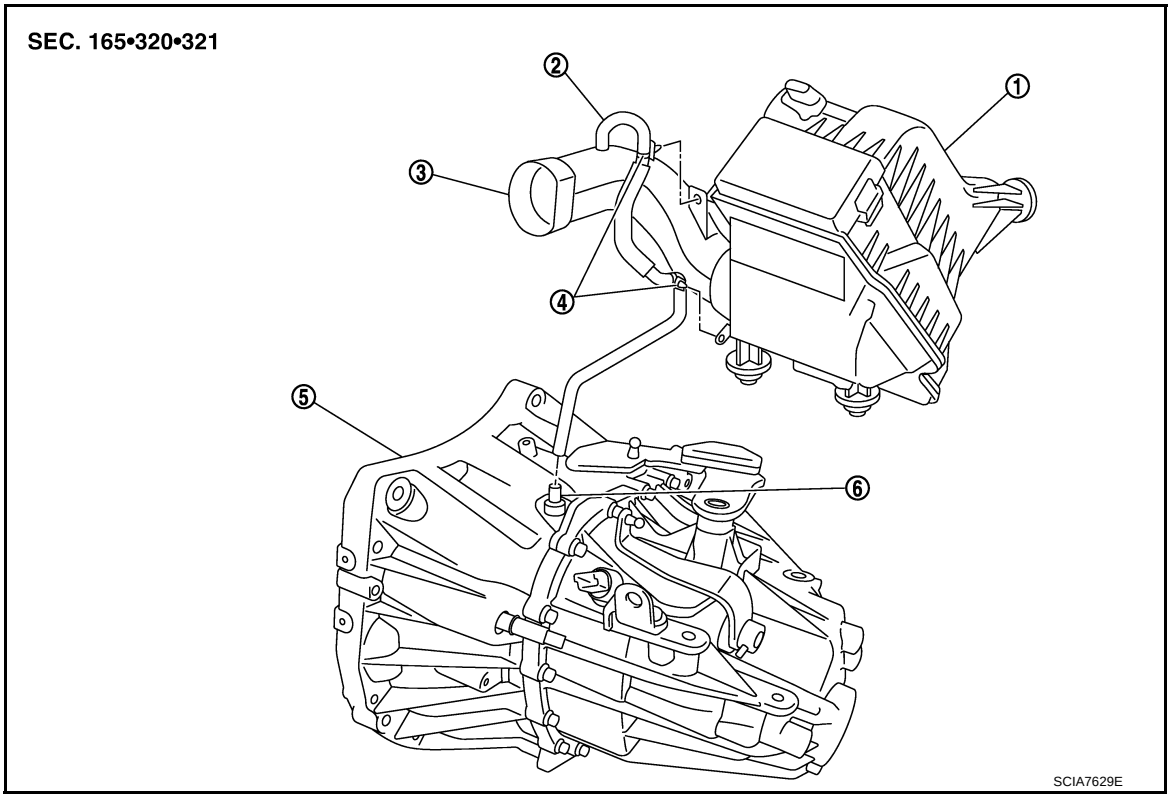


1. Air cleaner case
2. Air breather hose
3. Air duct
4. Clip
5. Transaxle assembly
6. 2 way connector

## Removal and Installation

INFOID:0000000009948875

### REMOVAL

1. Remove air duct (inlet). Refer to EM-24, "Removal and Installation".
2. Remove clip from the air duct.
3. Remove air duct. Refer to EM-24, "Removal and Installation".
4. Remove clip from the air cleaner case.
5. Remove air breather hose from the 2 way connector.
   **CAUTION:**
   **When removing air breather hose, be sure to hold 2 way connector securely.**

### INSTALLATION

Note the following, and install in the reverse order of removal.

- When installing air breather hose on 2 way connector, aim paint mark face toward the vehicle front.
- When installing air breather hose on 2 way connector, push it until it hits transaxle case.
- When installing air breather hose to air cleaner case, make sure that clip are fully inserted.
  **CAUTION:**
  **Make sure that air breather hose is not collapsed or blocked due to folding or bending when installed.**

# POSITION SWITCH

## Exploded View

INFOID:0000000009948876

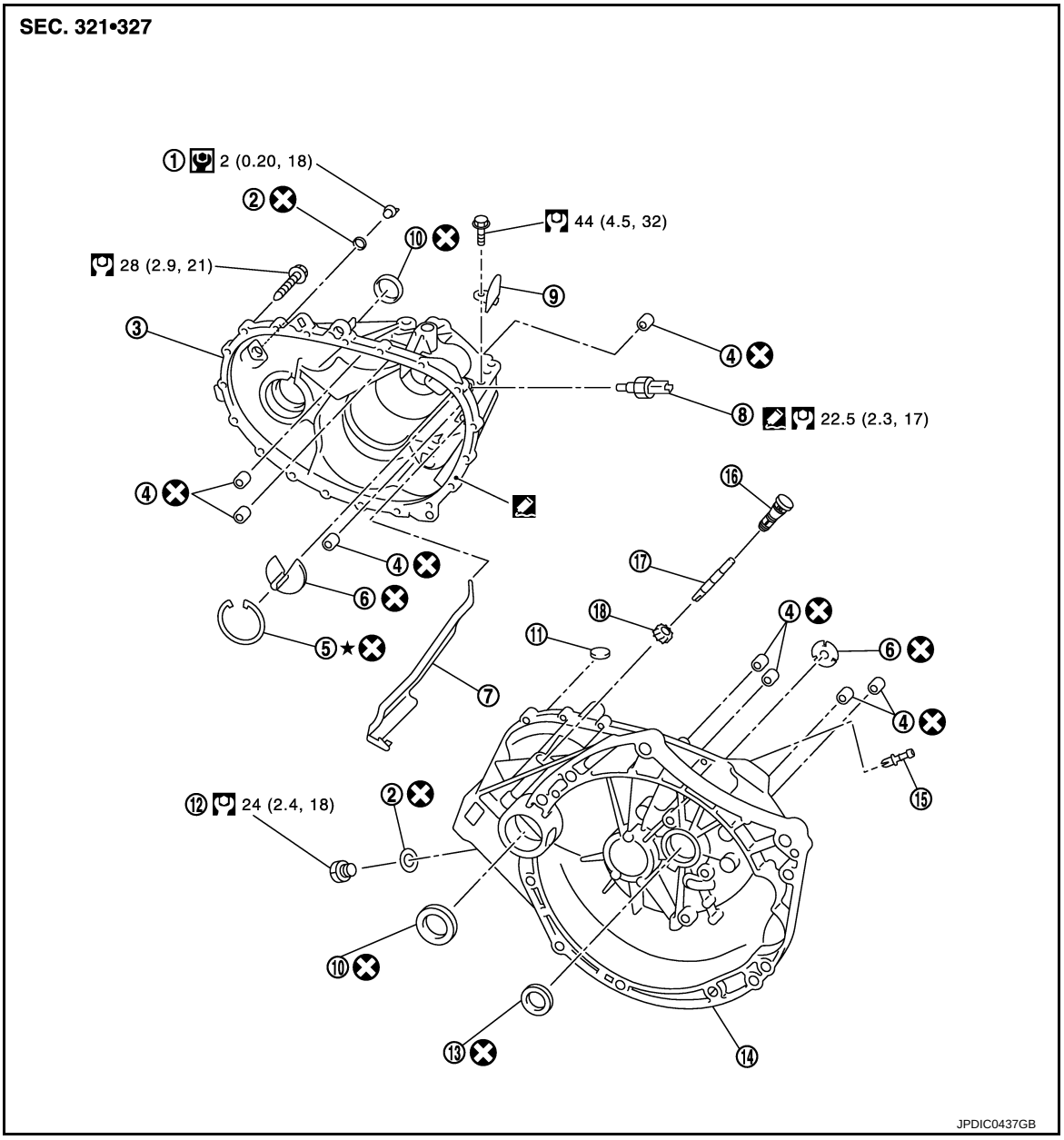


| | | | | | |
|---|---|---|---|---|---|
| 1. | Filler plug | 2. | Gasket | 3. | Transaxle case |
| 4. | Bushing | 5. | Snap ring | 6. | Oil channel |
| 7. | Oil gutter | 8. | Position switch | 9. | Bracket |
| 10. | Differential side oil seal | 11. | Magnet | 12. | Drain plug |
| 13. | Input shaft oil seal | 14. | Clutch housing | 15. | 2 way connector |
| 16. | Plug | 17. | Pinion shaft | 18. | Pinion gear |

: Apply Genuine Silicone RTV or an equivalent. Refer to GI-22, "Recommended Chemical Products and Sealants".

Refer to GI-4, "Components" for symbols not described on the above.

## Removal and Installation

INFOID:0000000009948877

### REMOVAL

1. Remove air duct (inlet). Refer to EM-24, "Removal and Installation".
2. Remove battery. Refer to PG-82, "Removal and Installation".
3. Remove clips from the air cleaner case and air duct. Refer to TM-22, "Removal and Installation".
4. Remove air cleaner case and air ducts. Refer to EM-24, "Removal and Installation".
5. Remove bracket (1).

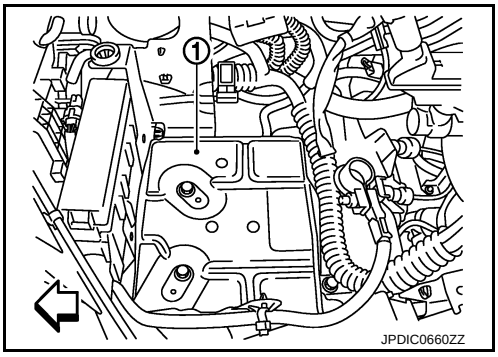


⇦ : Vehicle front

6. Disconnect position switch connector.
7. Remove position switch from transaxle case.

INSTALLATION

1. Apply recommended sealant to threads of position switch.
   - Use Genuine Silicone RTV or an equivalent. Refer to GI-22, "Recommended Chemical Products and Sealants".

   **CAUTION:**
   **Remove old sealant and oil adhering to threads.**
2. Install position switch to transaxle case.
3. Tighten position switch to the specified torque. Refer to TM-27, "Exploded View".
4. For the next step and after, install in the reverse order of removal.

# UNIT REMOVAL AND INSTALLATION

## TRANSAXLE ASSEMBLY

### Exploded View

INFOID:0000000009948878

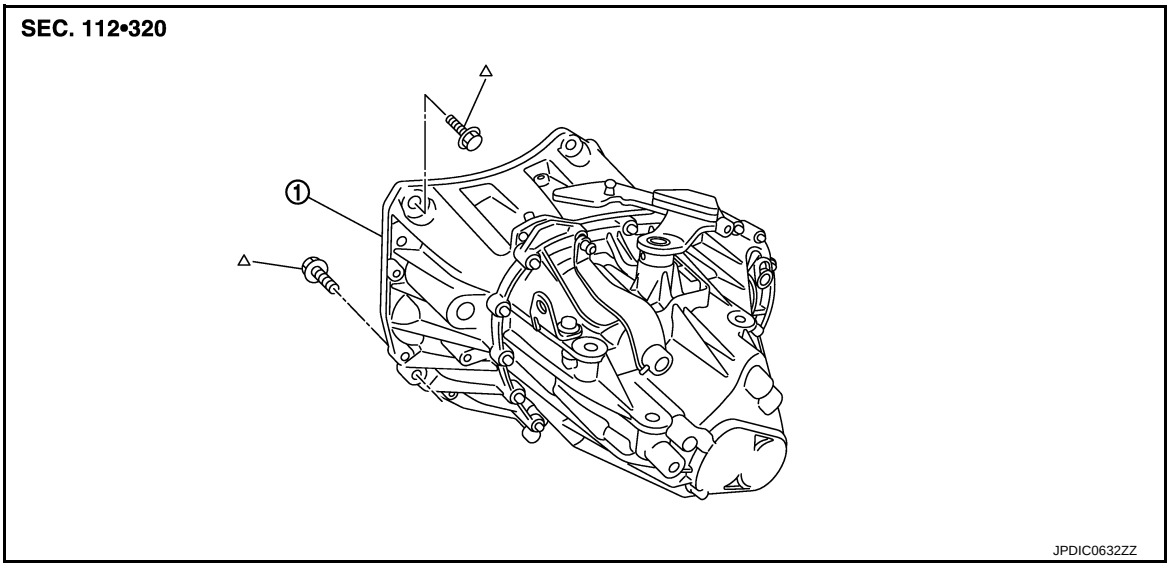


1. Transaxle assembly

△: Refer to "INSTALLATION" in TM-25, "Removal and Installation" for the locations and tightening torque.

### Removal and Installation

INFOID:0000000009948879

**CAUTION:**
**Never reuse CSC (Concentric Slave Cylinder). Because CSC slides back to the original position every time when removing transaxle assembly. At this timing, dust on the sliding parts may damage a seal of CSC and may cause clutch fluid leakage. Refer to CL-17, "Removal and Installation".**

REMOVAL

1. Disconnect the battery cable from the negative terminal.
2. Remove air duct (inlet). Refer to EM-24, "Removal and Installation".
3. Remove battery. Refer to PG-82, "Removal and Installation".
4. Remove clips from air cleaner case and air duct. Refer to TM-22, "Removal and Installation".
5. Remove air cleaner case and air ducts. Refer to EM-24, "Removal and Installation".
6. Remove air breather hose. Refer to TM-22, "Removal and Installation".
7. Remove bracket (1).

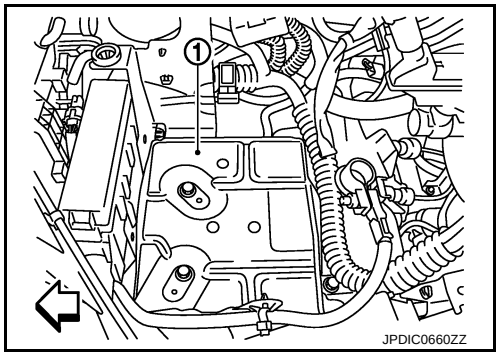


⇦ : Vehicle front

8. Disconnect position switch connector.
9. Remove harness clip from transaxle assembly.
10. Disconnect selector cable and shifter cable from transaxle assembly. Refer to TM-19, "Removal and Installation".
11. Remove starter motor. Refer to STR-26, "Removal and Installation".
12. Remove clutch tube from CSC (Concentric Slave Cylinder). Refer to CL-15, "Removal and Installation".

    **CAUTION:**
    - **Keep painted surface on the body or other parts free of clutch fluid. If it spills, wipe up immediately and wash the affected area with water.**

- **Never depress clutch pedal during removal procedure.**

13. Remove engine under cover.
14. Remove fender protector LH. Refer to EXT-21, "FENDER PROTECTOR : Removal and Installation".
15. Disconnect ground cable.
16. Remove front drive shafts. Refer to FAX-16, "LEFT SIDE : Removal and Installation" (LH) or FAX-17, "RIGHT SIDE : Removal and Installation" (RH).
    **NOTE:**
    Insert a suitable plug into differential side oil seal after removing front drive shaft.
17. Set a suitable jack to transaxle assembly and then set a suitable jack to engine assembly.
    **CAUTION:**
    **When setting a suitable jack, be careful so that it does not contact with the switch.**
18. Remove engine mounting bracket (LH) mounting bolts (⬅) from transaxle assembly. Refer to EM-74, "Removal and Installation".

    ⇦ : Vehicle front

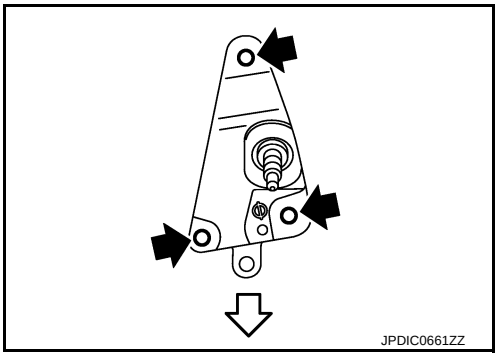


19. Remove rear engine mounting bracket and rear torque rod. Refer to EM-74, "Removal and Installation".
20. Remove transaxle assembly mounting bolts, using a power tool [Commercial service tool].
21. Remove transaxle assembly from the engine.
    **CAUTION:**
    - **Fix transaxle assembly to a suitable jack.**
    - **The transaxle assembly must not interfere with the wire harnesses and clutch tube.**
22. Remove CSC (Concentric Slave Cylinder). Refer to CL-17, "Removal and Installation".

INSTALLATION

Note the following, and install in the reverse order of removal.

**CAUTION:**

- **Fix transaxle assembly to a suitable jack.**
- **The transaxle assembly must not interfere with the wire harnesses and clutch tube.**
- **When installing transaxle assembly, never bring input shaft into contact with clutch cover.**
- Tighten transaxle assembly mounting bolts to the specified torque. The figure is the view from the engine.

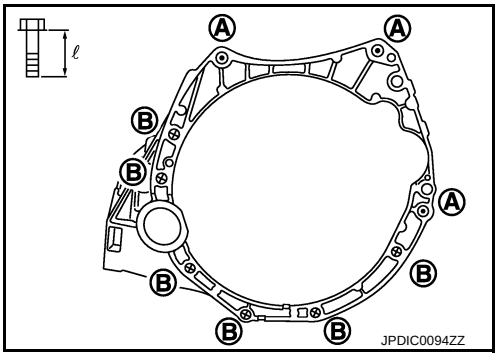


⊙ : Transaxle to engine

⊗ : Engine to transaxle

| Bolt symbol | A | B |
|---|---|---|
| Quantity | 3 | 6 |
| Bolt length "ℓ" mm (in) | 60 (2.36) | 50 (1.97) |
| Tightening torque N·m (kg-m, ft-lb) | 62.0 (6.3, 46) | |

## Inspection

INFOID:0000000009948880

INSPECTION AFTER INSTALLATION

- Check the control linkage. Refer to TM-21, "Inspection".
- Check the oil leakage and the oil level. Refer to TM-17, "Inspection".

# UNIT DISASSEMBLY AND ASSEMBLY

## TRANSAXLE ASSEMBLY

### Exploded View

INFOID:0000000009948881

#### CASE AND HOUSING

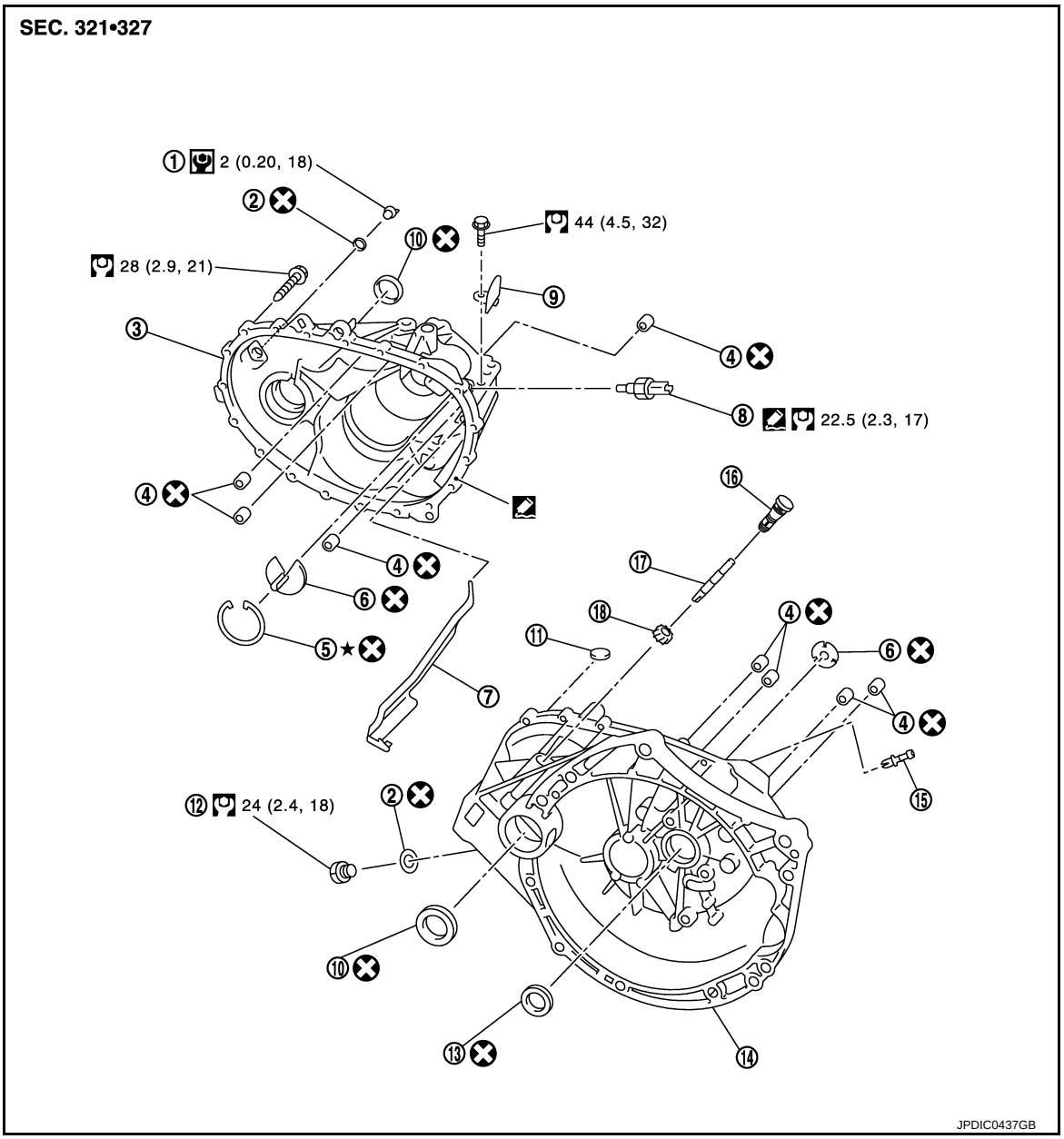


| | | | | | |
|---|---|---|---|---|---|
| 1. | Filler plug | 2. | Gasket | 3. | Transaxle case |
| 4. | Bushing | 5. | Snap ring | 6. | Oil channel |
| 7. | Oil gutter | 8. | Position switch | 9. | Bracket |
| 10. | Differential side oil seal | 11. | Magnet | 12. | Drain plug |
| 13. | Input shaft oil seal | 14. | Clutch housing | 15. | 2 way connector |
| 16. | Plug | 17. | Pinion shaft | 18. | Pinion gear |

: Apply Genuine Silicone RTV or an equivalent. Refer to GI-22, "Recommended Chemical Products and Sealants".

Refer to GI-4, "Components" for symbols not described on the above.

## SHAFT AND GEAR

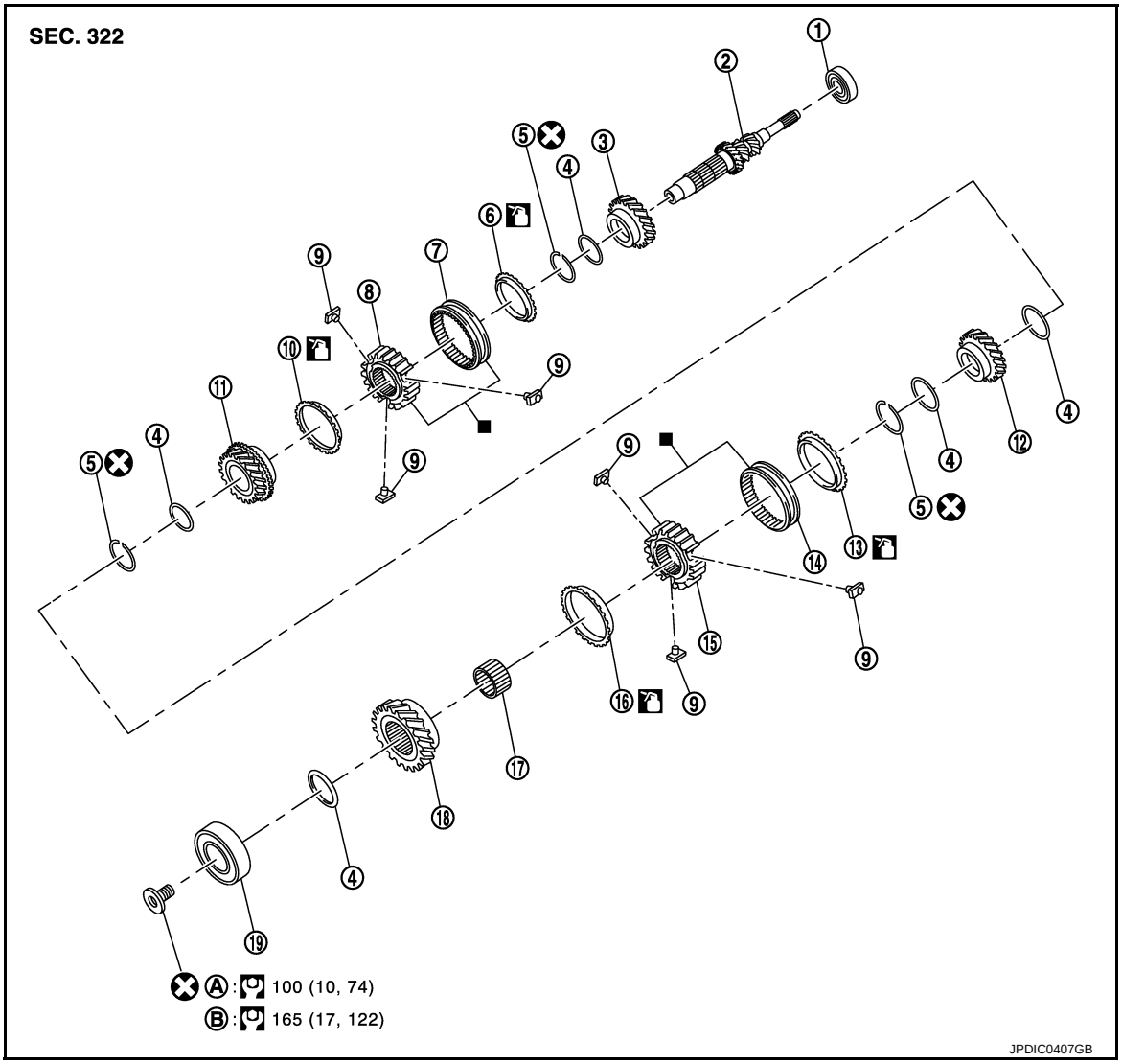


| | | |
|---|---|---|
| 1. Input shaft front bearing | 2. Input shaft | 3. 3rd input gear |
| 4. Spacer | 5. Snap ring | 6. 3rd baulk ring |
| 7. 3rd-4th coupling sleeve | 8. 3rd-4th synchronizer hub | 9. Insert key |
| 10. 4th baulk ring | 11. 4th input gear | 12. 5th input gear |
| 13. 5th baulk ring | 14. 5th-6th coupling sleeve | 15. 5th-6th synchronizer hub |
| 16. 6th baulk ring | 17. Needle bearing | 18. 6th input gear |
| 19. Input shaft rear bearing | | |
| A. First step | B. Final step | |

: Apply gear oil.

■: Replace the parts as a set.

Refer to GI-4, "Components" for symbols not described on the above.

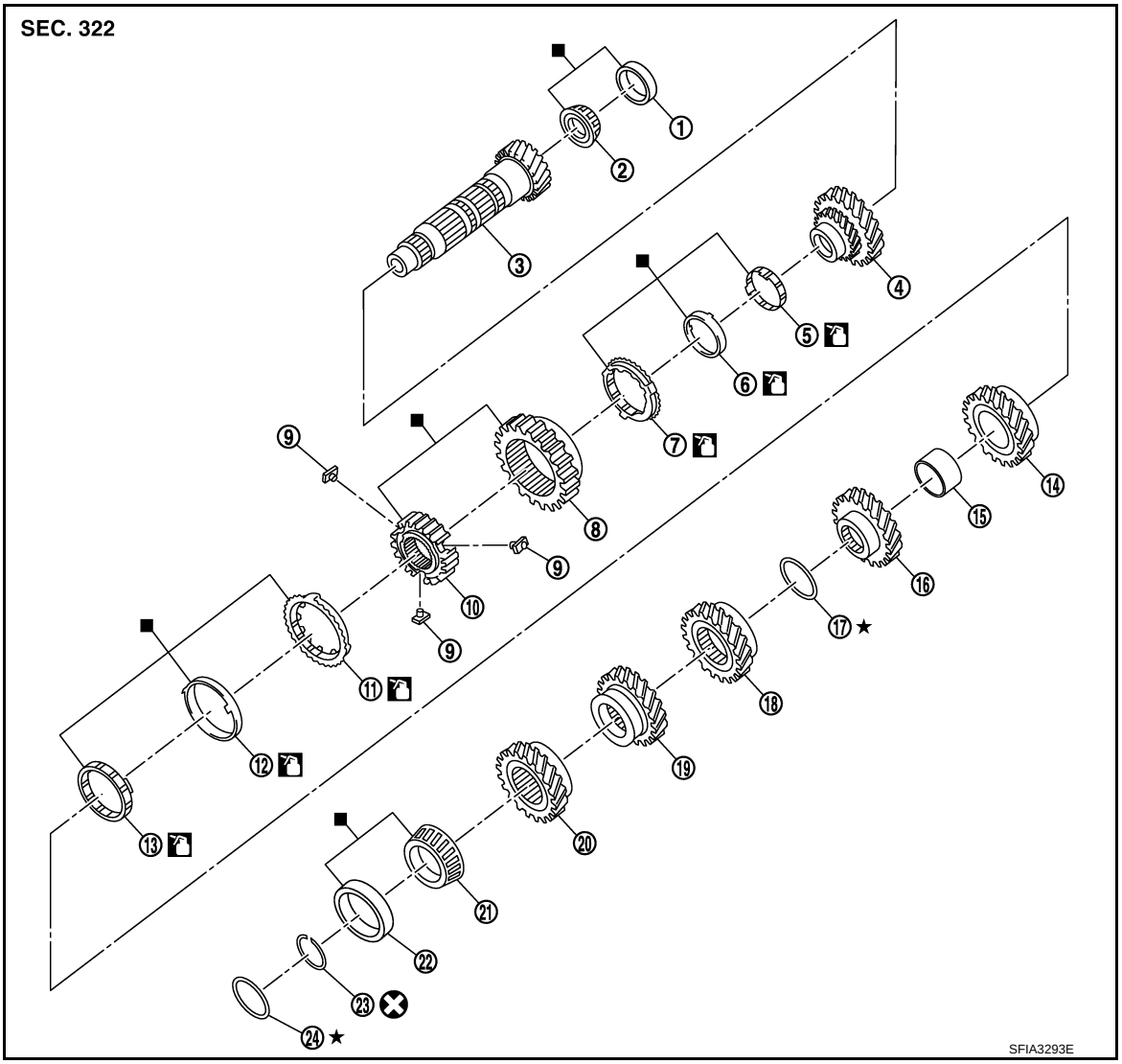


| | | | | | |
|---|---|---|---|---|---|
| 1. | Mainshaft front bearing outer race | 2. | Mainshaft front bearing inner race | 3. | Mainshaft |
| 4. | 1st main gear | 5. | 1st inner baulk ring | 6. | 1st synchronizer cone |
| 7. | 1st outer baulk ring | 8. | 1st-2nd coupling sleeve | 9. | Insert key |
| 10. | 1st-2nd synchronizer hub | 11. | 2nd outer baulk ring | 12. | 2nd synchronizer cone |
| 13. | 2nd inner baulk ring | 14. | 2nd main gear | 15. | Bushing |
| 16. | 3rd main gear | 17. | Mainshaft adjusting shim | 18. | 4th main gear |
| 19. | 5th main gear | 20. | 6th main gear | 21. | Mainshaft rear bearing inner race |
| 22. | Mainshaft rear bearing outer race | 23. | Snap ring | 24. | Mainshaft rear bearing adjusting shim |

: Apply gear oil.

: Replace the parts as a set.

Refer to GI-4, "Components" for symbols not described on the above.

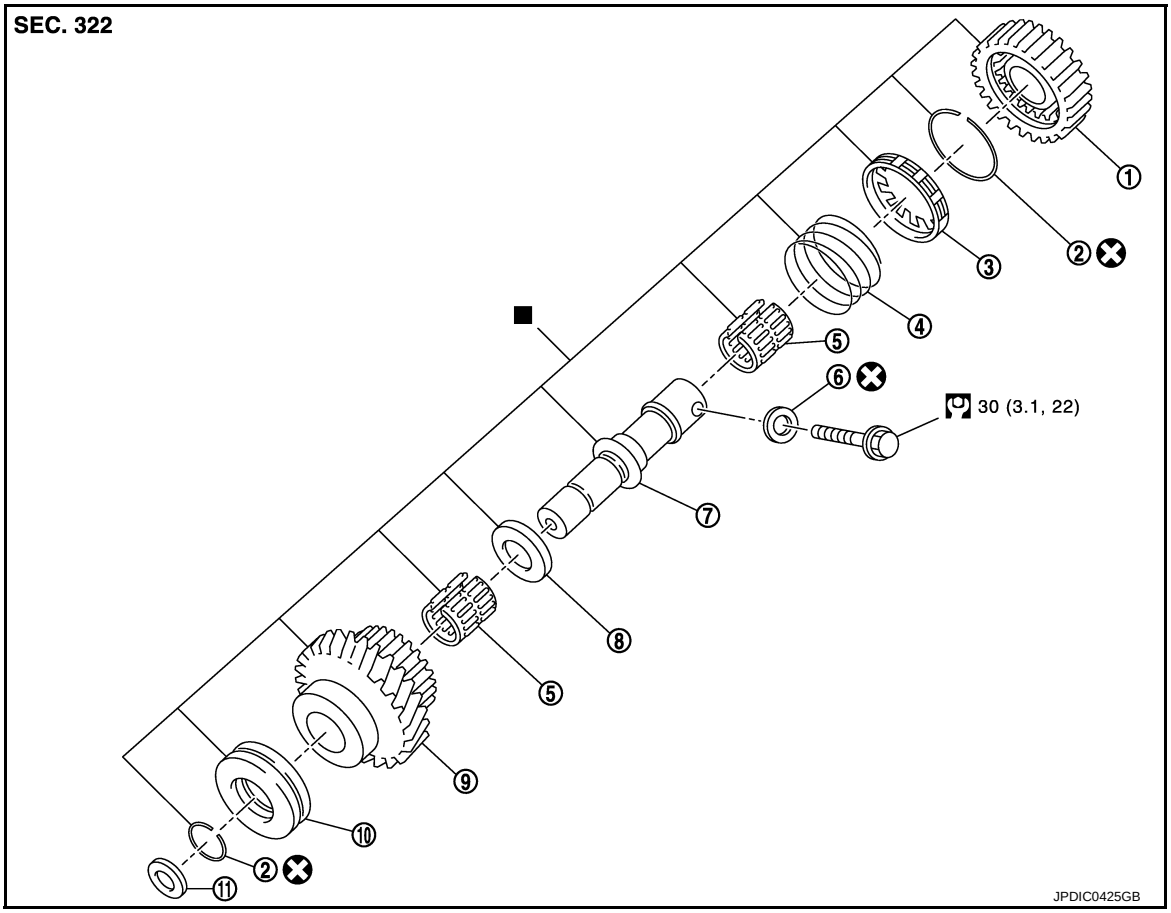


| | | | | | |
|---|---|---|---|---|---|
| 1. | Reverse output gear | 2. | Snap ring | 3. | Reverse baulk ring |
| 4. | Return spring | 5. | Needle bearing | 6. | Seal washer |
| 7. | Reverse idler shaft | 8. | Spacer | 9. | Reverse input gear |
| 10. | Lock washer | 11. | Spring washer | | |

■: Replace the parts as a set.

Refer to GI-4, "Components" for symbols not described on the above.

## SHIFT FORK AND FORK ROD

SEC. 328

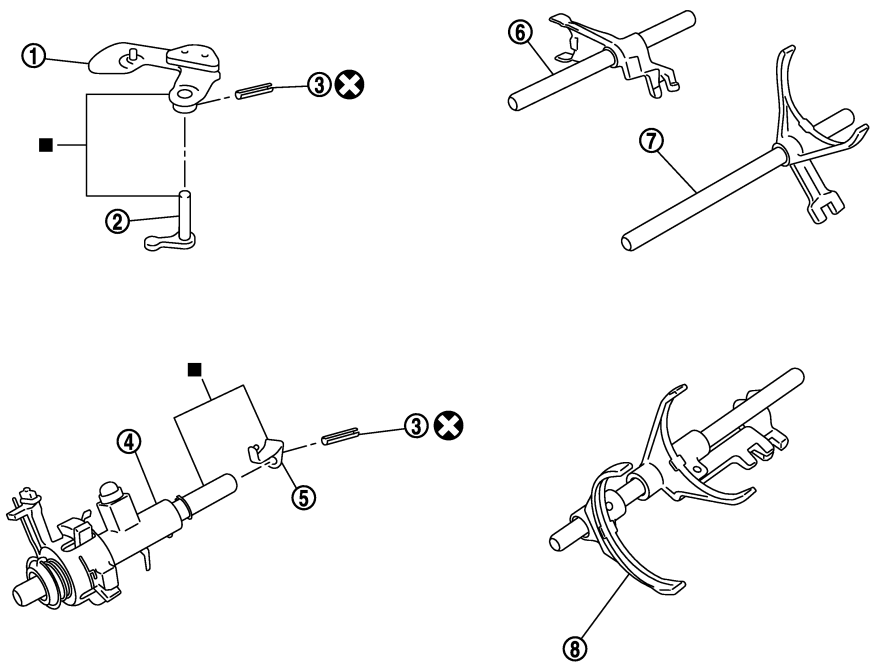


1. Shifter lever A
2. Shifter lever B
3. Retaining pin
4. Selector
5. Selector lever
6. Reverse fork rod
7. 1st-2nd fork rod
8. Fork rod

■: Replace the parts as a set.

Refer to GI-4, "Components" for symbols not described on the above.

## FINAL DRIVE

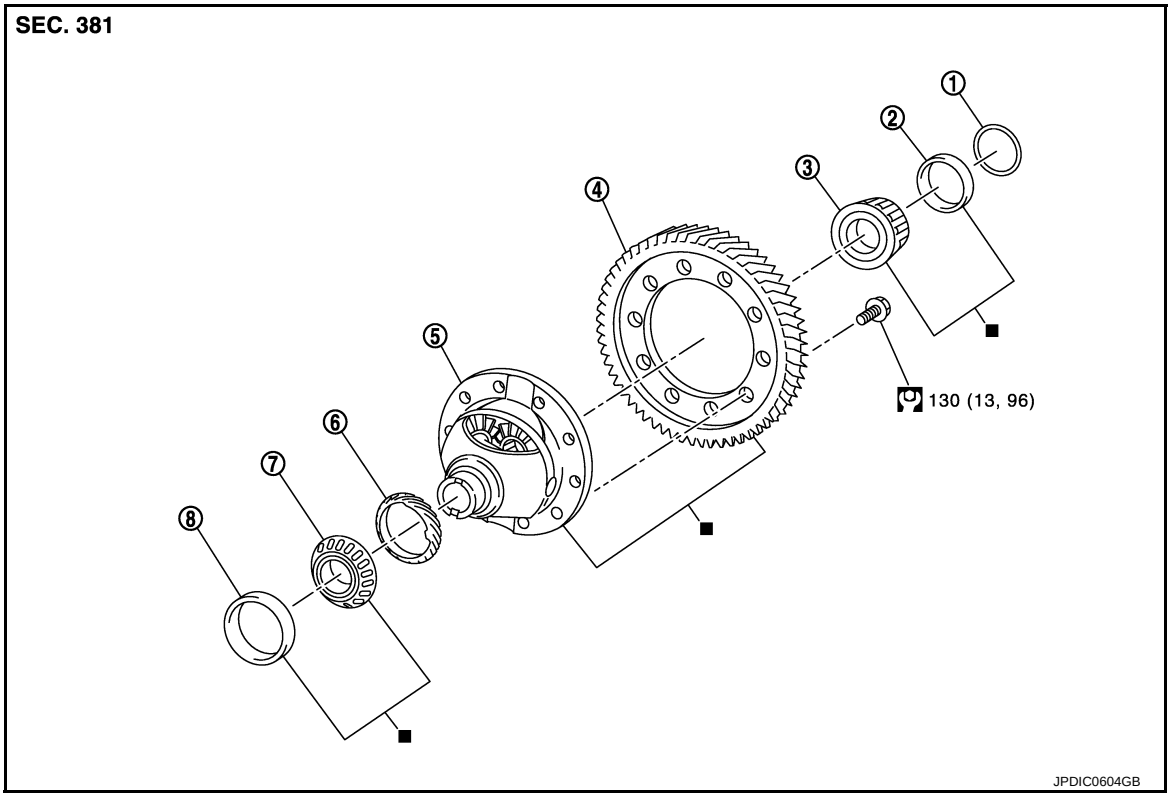


1. Shim
2. Differential side bearing outer race (transaxle case side)
3. Differential side bearing inner race (transaxle case side)
4. Final gear
5. Differential case
6. Speedometer drive gear
7. Differential side bearing inner race (clutch housing side)
8. Differential side bearing outer race (clutch housing side)

■: Replace the parts as a set.

Refer to GI-4, "Components" for symbols not described on the above.

## Disassembly

INFOID:0000000009948882

1. Remove drain plug and gasket from clutch housing, using a socket [Commercial service tool] and then drain gear oil.
2. Remove filler plug and gasket from transaxle case.
3. Remove selector lever (1) retaining pin with a pin punch to remove selector lever.
4. Remove bracket (2) and position switch (3) from transaxle case.

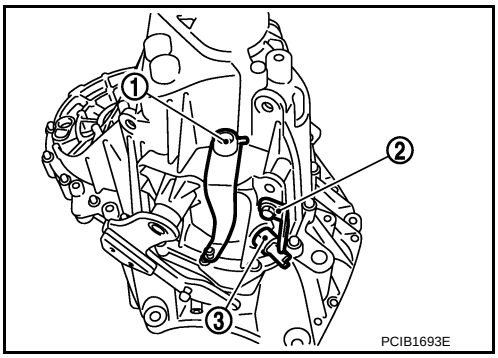

5. Remove transaxle case mounting bolts (⬅).

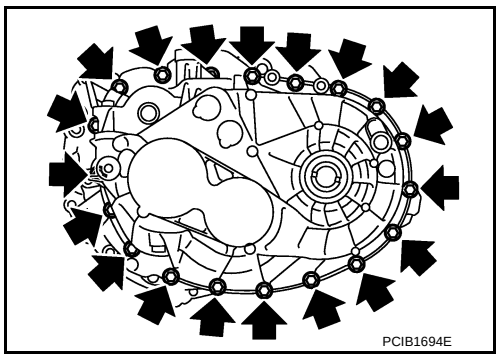


6. Remove reverse idler shaft mounting bolt (⬅) and seal washer.

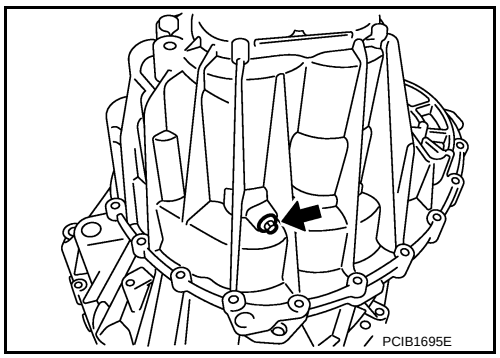


7. Remove transaxle case (2) while rotating shifter lever A (1) in the direction as shown in the figure.

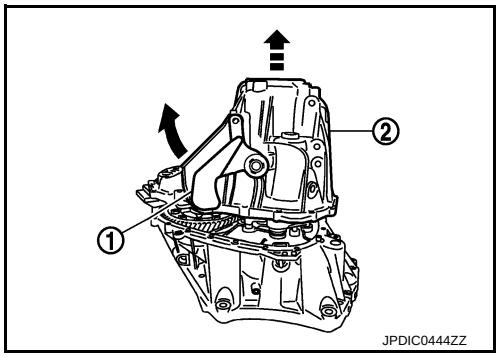


8. Remove selector spring (1) from return bushing (A).

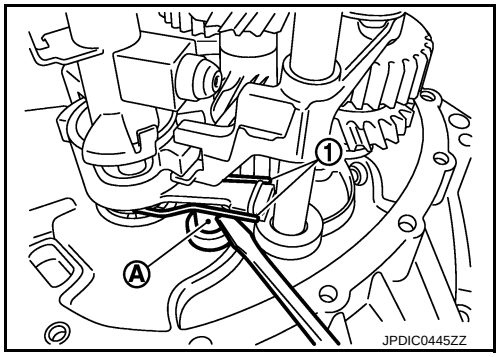


9. Shift 1st-2nd fork rod (1), fork rod (2), and reverse fork rod (3) to the neutral position.
10. Remove selector (4) from clutch housing.

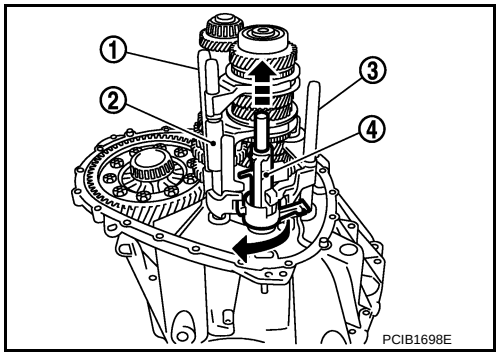

11. Remove reverse idler shaft assembly (1) according to the following procedures.

a. Pull up input shaft assembly (2), mainshaft assembly (3), fork rod (4), and 1st-2nd fork rod (5).
**NOTE:**
It is easier to pull up when shifting each fork rod to each shaft side.

b. Remove reverse idler shaft assembly and reverse fork rod (6) from clutch housing.

12. Remove spring washer from clutch housing.

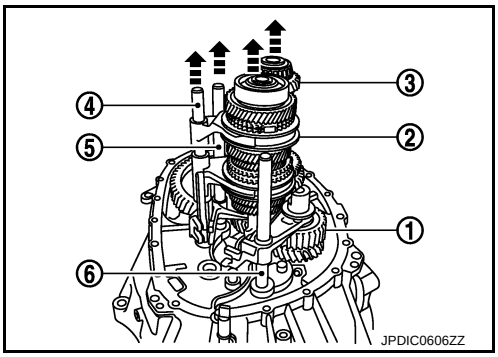


13. Pull up and remove input shaft assembly (1), mainshaft assembly (2), fork rod (3), and 1st-2nd fork rod (4) from clutch housing.
**NOTE:**
It is easier to pull up when shifting each fork rod to each shaft side.

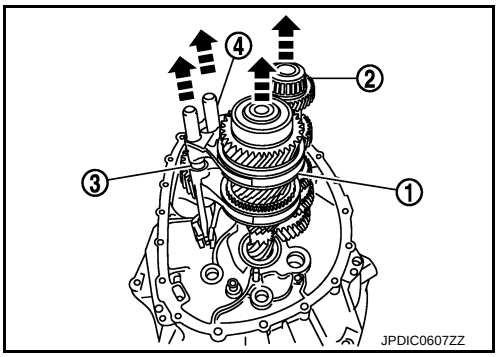


14. Remove final drive assembly (1) from clutch housing.
15. Remove magnet from clutch housing.

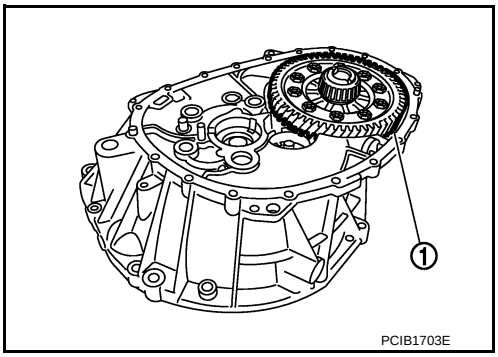


16. Remove differential side oil seals (1) from clutch housing and transaxle case.
**CAUTION:**
**Never damage clutch housing and transaxle case.**

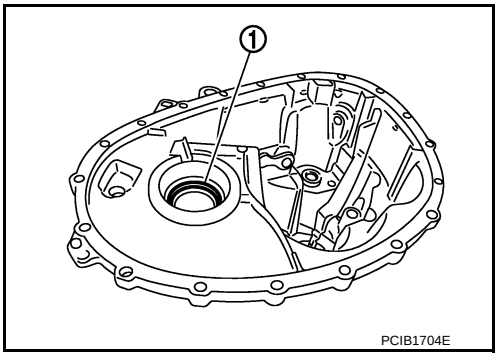


17. Remove differential side bearing outer race (1) from clutch housing, using a brass rod.
**CAUTION:**
**Never damage clutch housing.**

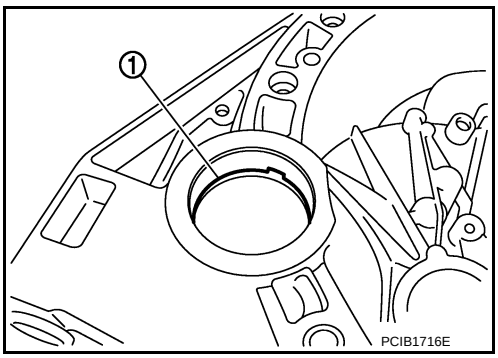

18. Remove differential side bearing outer race (1) from transaxle case, using a brass rod.
**CAUTION:**
**Never damage transaxle case.**
19. Remove shim (2) from transaxle case.

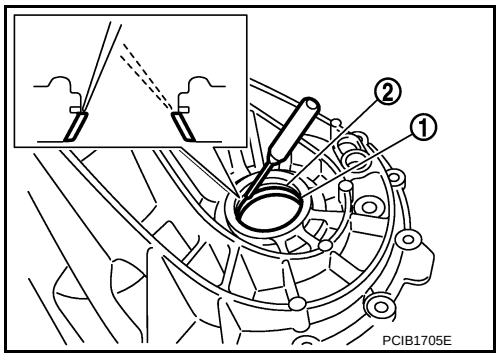


20. Remove shifter lever A (1) retaining pin, using a pin punch.
21. Remove shifter lever A from transaxle case.

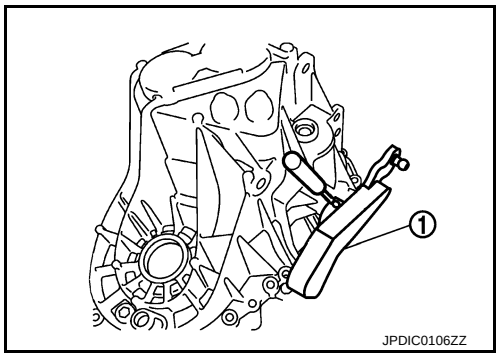


22. Remove shifter lever B (1) from transaxle case.

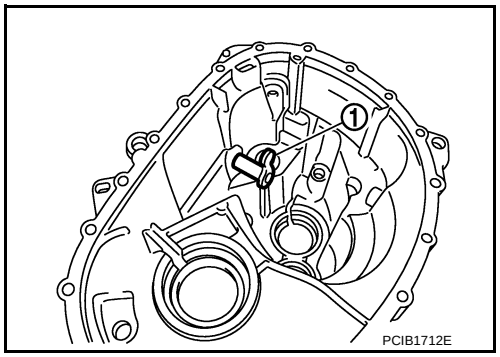


23. Remove oil gutter (1) from transaxle case.

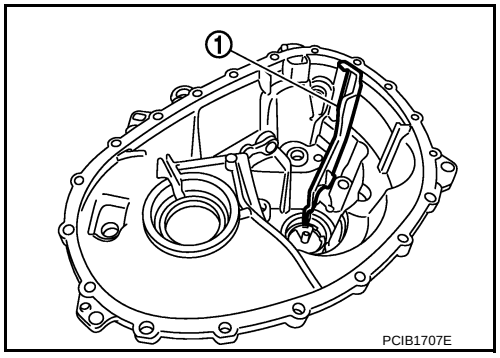


24. Remove bushings (1) from transaxle case, using a remover [Commercial service tool].
**CAUTION:**
**Never damage transaxle case.**

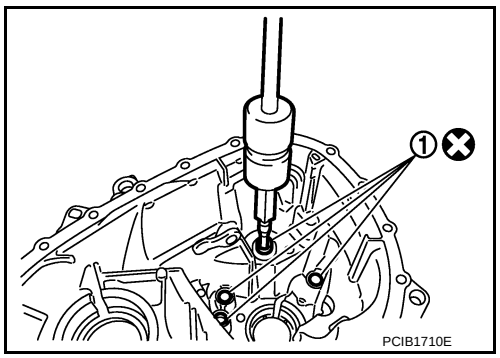

25. Remove mainshaft rear bearing outer race from transaxle case, using a remover [Commercial service tool].
**CAUTION:**
**Never damage transaxle case.**
26. Remove mainshaft rear bearing adjusting shim from transaxle case.

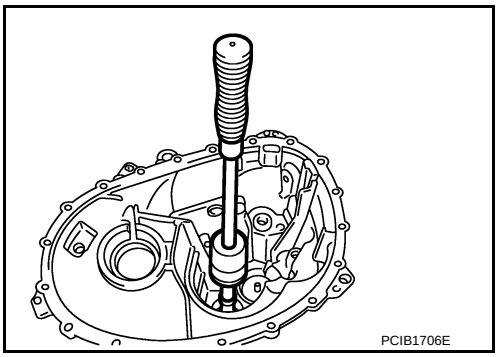


27. Remove snap ring (1) and oil channel (2) from transaxle case.

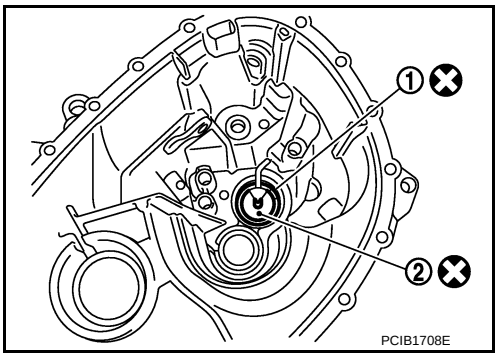


28. Remove input shaft oil seal (1) from clutch housing, using a screwdriver.
**CAUTION:**
**Never damage clutch housing.**

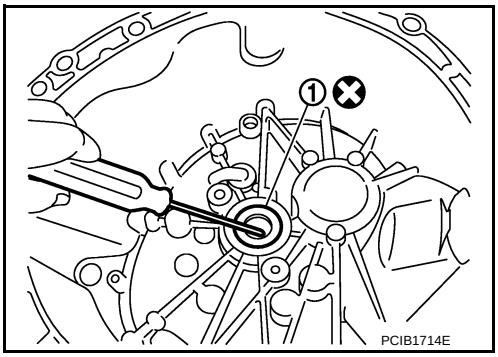


29. Remove mainshaft front bearing outer race (1) from clutch housing, using the puller (A) [SST: KV381054S0 (J-34286)] and a spacer (B) [Commercial service tool].
**CAUTION:**
**Never damage clutch housing.**
30. Remove oil channel (2) from clutch housing.

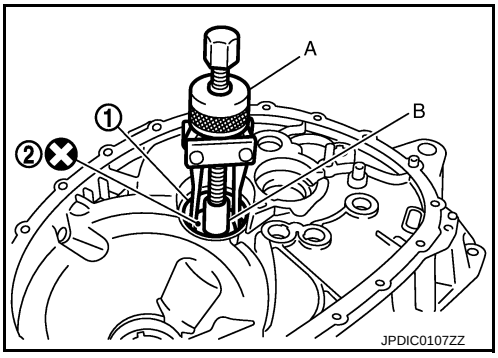


31. Remove bushing (1) from clutch housing, using a remover [Commercial service tool].
**CAUTION:**
**Never damage clutch housing.**

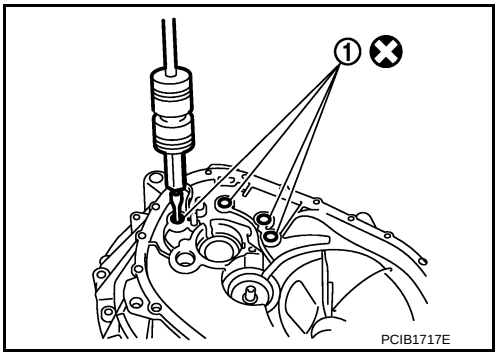

32. Remove 2 way connector (1) from clutch housing.
33. Remove plug from clutch housing.

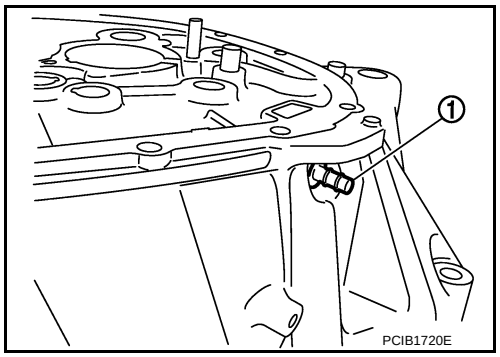


34. Remove pinion gear (1) and pinion shaft (2) from clutch housing.

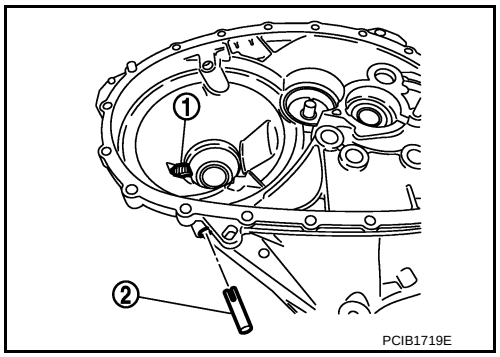


## Assembly

INFOID:0000000009948883

1. Install pinion gear (1) and pinion shaft (2) to clutch housing.
   **CAUTION:**
   **Replace transaxle assembly when replacing clutch housing.**
2. Install plug to clutch housing.

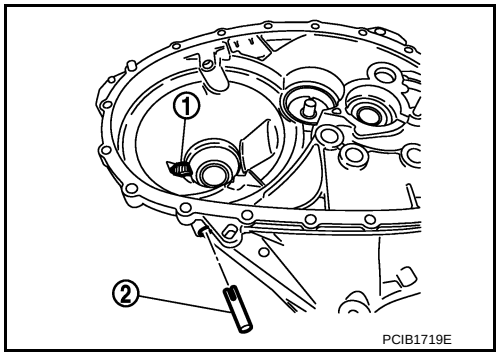


3. Install 2 way connector (1) to clutch housing.

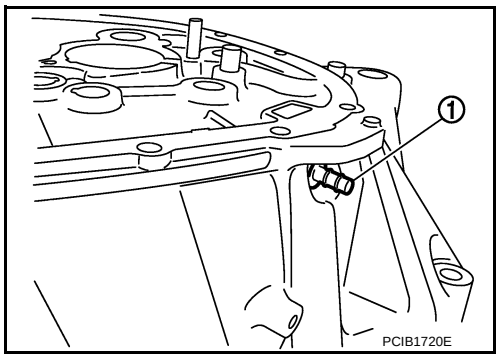

4. Install bushings (1) so that they becomes even to clutch housing edge surface, using a drift (A) [Commercial service tool].
5. Install oil channel to clutch housing.
   **CAUTION:**
   **Never reuse oil channel.**

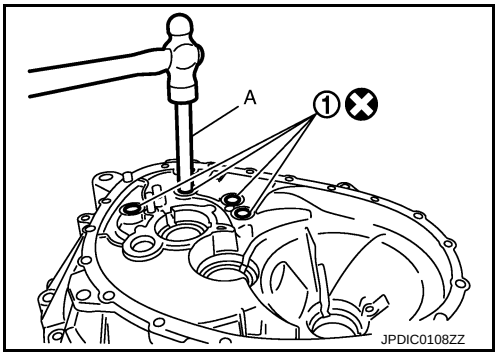


6. Install mainshaft front bearing outer race to clutch housing, using the drift (A) [SST: KV38100200 ( - )].
   **CAUTION:**
   **Replace mainshaft front bearing outer race and mainshaft front bearing inner race as a set.**

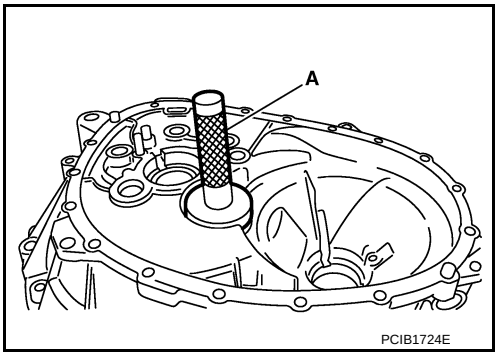


7. Install input shaft oil seal (1) to clutch housing, using the drift (A) [SST: ST33220000 ( - )].

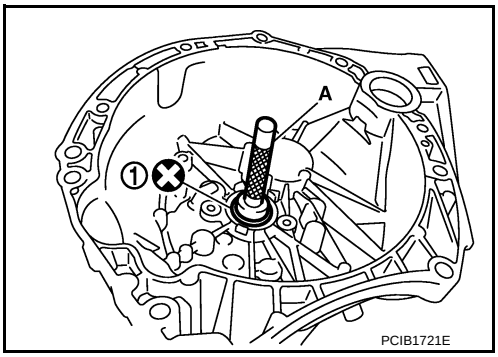


8. Install snap ring (1) and oil channel (2) to transaxle case.
   **CAUTION:**
   - **Select and install snap ring that has the same thickness as previous one.**
   - **Replace transaxle assembly when replacing transaxle case.**
9. Install mainshaft rear bearing adjusting shim to transaxle case.
   **CAUTION:**
   **Select mainshaft rear bearing adjusting shim according to the following procedures when replacing mainshaft adjusting shim, 6th main gear, 5th main gear, or 4th main gear.**
   - **Replace mainshaft adjusting shim.**
   - **If new mainshaft adjusting shim is thinner than previous one, offset the thickness difference by selecting thicker mainshaft rear bearing adjusting shim.**
   - **If new mainshaft adjusting shim is thicker than previous one, offset the thickness difference by selecting thinner mainshaft rear bearing adjusting shim.**
   - **Replace 6th main gear, 5th main gear, or 4th main gear.**
   - **Measure the thickness of the main gear used before and the new main gear**
   - **Increase the thickness of the mainshaft rear bearing adjusting shim, if the difference is smaller than 0.025 mm (0.0010 in).**
   - **Decrease the thickness of the mainshaft rear bearing adjusting shim, if the difference is greater than 0.025 mm (0.0010 in).**

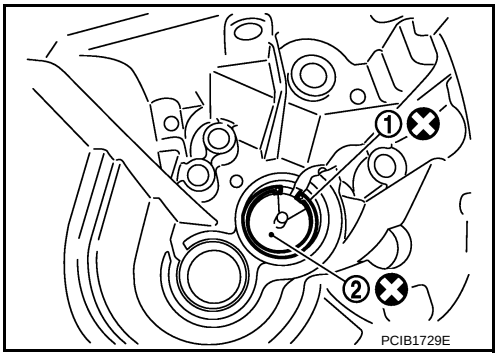

10. Install mainshaft rear bearing outer race to transaxle case, using the drift (A) [SST: KV38100200 ( - )].
**CAUTION:**
**Replace mainshaft rear bearing outer race and mainshaft rear bearing inner race as a set.**

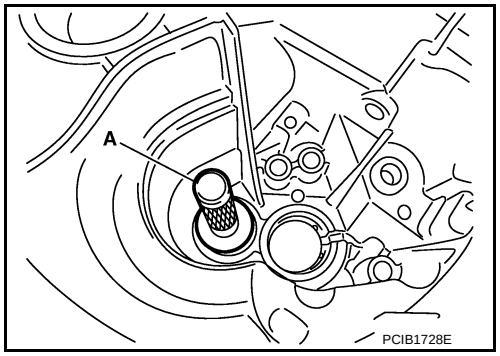


11. Install bushings (1) to transaxle case, using a drift (A) [Commercial service tool].

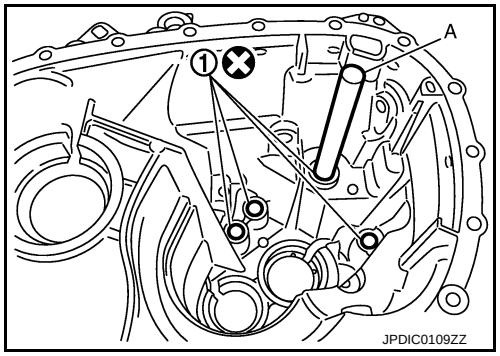


12. Install oil gutter (1) to transaxle case.

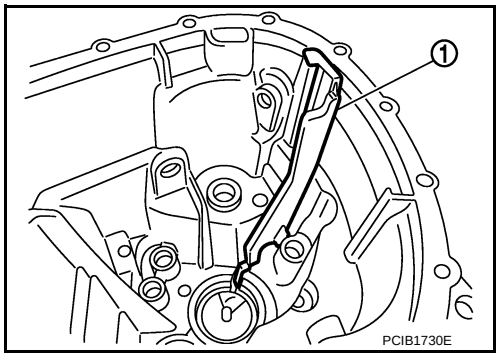


13. Install shifter lever B (1) to transaxle case.
**CAUTION:**
**Replace shifter lever A and shifter lever B as a set.**
14. Install shifter lever A to transaxle case.
**CAUTION:**
**Replace shifter lever A and shifter lever B as a set.**

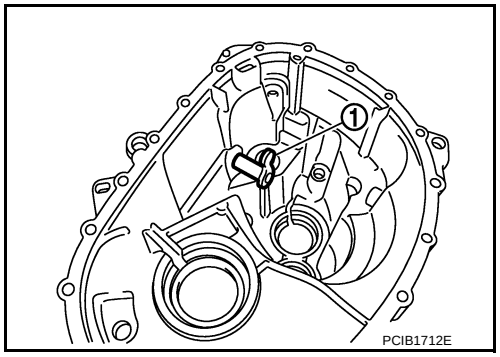


15. Install retaining pin to shifter lever A (1), using a pin punch.
**CAUTION:**
**Never reuse retaining pin.**
16. Install shim to transaxle case.

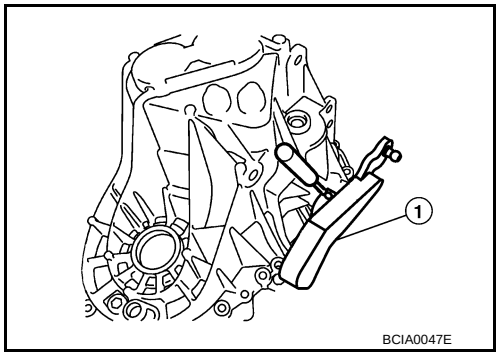

17. Install differential side bearing outer race (transaxle case side) to transaxle case, using the drift (A) [SST: ST33400001 (J-26082)].
**CAUTION:**
**Replace differential side bearing outer race (transaxle case side) and differential side bearing inner race (transaxle case side) as a set.**

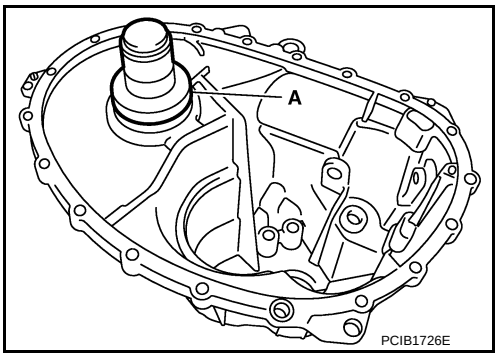


18. Install differential side bearing outer race (clutch housing side) to clutch housing, using the drift (A) [SST: KV38100200 ( - )].
**CAUTION:**
**Replace differential side bearing outer race (clutch housing side) and differential side bearing inner race (clutch housing side) as a set.**

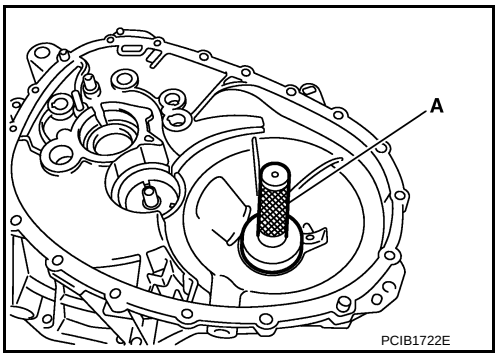


19. Install differential side oil seals (1) to clutch housing and transaxle case, using the drift [Stamping number: B.vi 1666-B] of the drift set [SST: KV32500QAA ( - )].

A : Transaxle case side
B : Clutch housing side

**Dimension "$L_1$" : 1.2 – 1.8 mm (0.047 – 0.071 in)**
**Dimension "$L_2$" : 2.7 – 3.3 mm (0.106 – 0.130 in)**

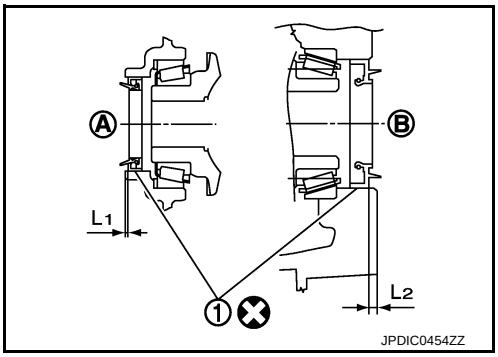


20. Install magnet to clutch housing.
21. Install final drive assembly to clutch housing.
22. Set fork rod (1) to input shaft assembly (2), and then install them to clutch housing.

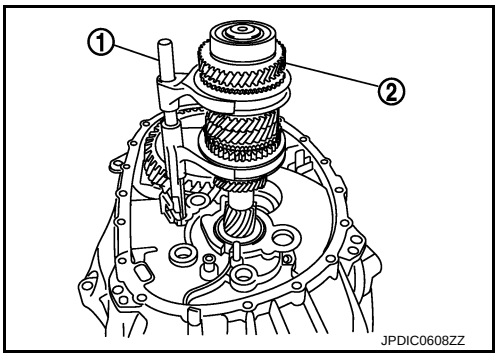

23. Install mainshaft assembly (1) according to the following procedures.
a. Pull up input shaft assembly (2) and fork rod (3).
b. Set 1st-2nd fork rod (4) to mainshaft assembly, and then install them to clutch housing.

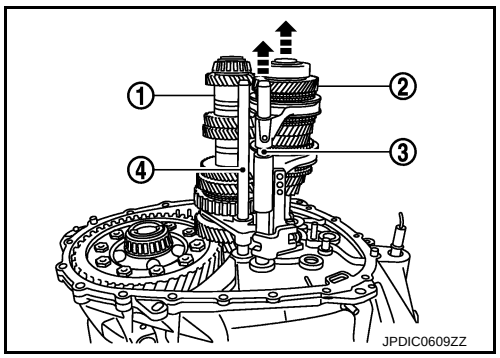


24. Install reverse idler shaft assembly (1) according to the following procedures.
a. Install spring washer to clutch housing.
b. Pull up input shaft assembly (2), mainshaft assembly (3), fork rod (4), and 1st-2nd fork rod (5).
**NOTE:**
It is easier to pull up when shifting each fork rod to each shaft side.
c. Set reverse fork rod (6) to reverse idler shaft assembly, and then install them to clutch housing.

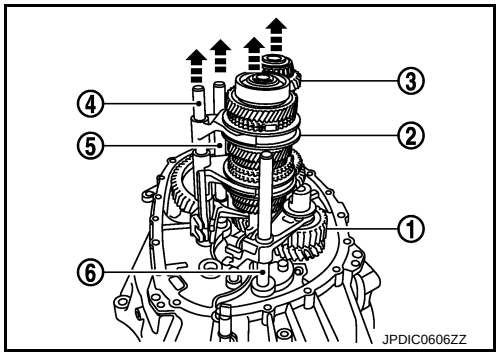


25. Shift 1st-2nd fork rod (1), fork rod (2), and reverse fork rod (3) to the neutral position.
26. Install selector (4) to clutch housing.
**CAUTION:**
**Replace selector lever and selector as a set.**

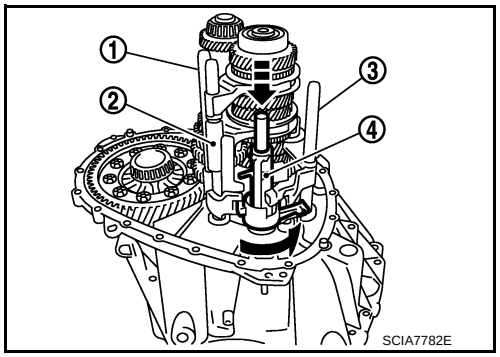


27. Install selector spring (1) to return bushing (A).
28. Apply recommended sealant to mounting surface of transaxle case.
- Use Genuine Silicone RTV or an equivalent. Refer to GI-22, "Recommended Chemical Products and Sealants".

**CAUTION:**
- **Remove old sealant adhering to the mounting surfaces. Also remove any moisture, oil, or foreign material adhering to both mounting surfaces.**
- **Check that mounting surface is not damaged.**
- **Apply sealant bead continuously.**

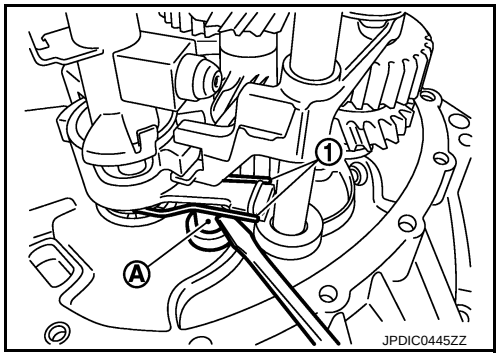


29. Install transaxle case to clutch housing while rotating shifter lever A (1) in the direction as shown in the figure.

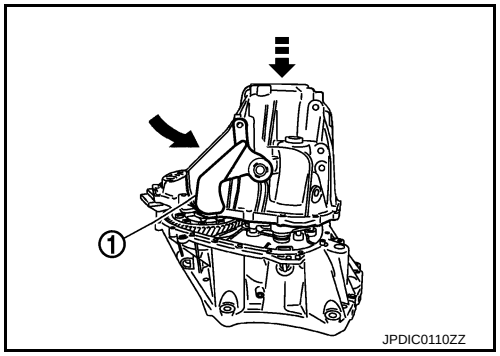

30. Install reverse idler shaft mounting bolt (⬅) according to the following procedures.

a. Install seal washer to reverse idler shaft mounting bolt, and install reverse idler shaft mounting bolt to transaxle case.
**CAUTION:**
**Never reuse seal washer.**

b. Tighten reverse idler shaft mounting bolt to the specified torque.

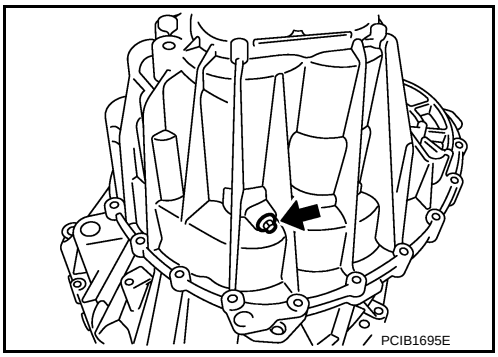


31. Tighten transaxle case mounting bolts (⬅) to the specified torque.

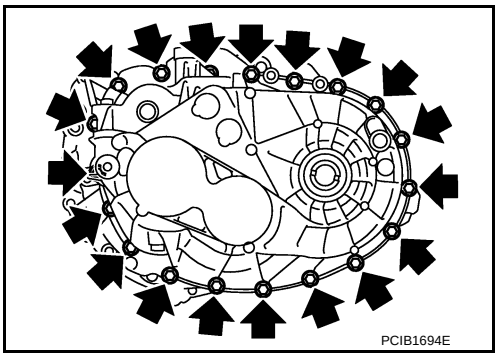


32. Install position switch (1) according to the following procedures.

a. Apply recommended sealant to threads of position switch.
- Use Genuine Silicone RTV or an equivalent. Refer to GI-22, "Recommended Chemical Products and Sealants".

**CAUTION:**
**Remove old sealant and oil adhering to threads.**

b. Install position switch to transaxle case, and tighten it to the specified torque.

33. Install bracket (2) to transaxle case, and tighten mounting bolt to the specified torque.

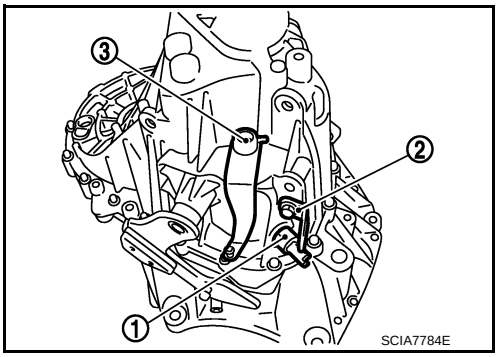


34. Install selector lever (3) according to following the procedures.

a. Install selector lever to transaxle case.
**CAUTION:**
**Replace selector lever and selector as a set.**

b. Install retaining pin to selector lever, using a pin punch.
**CAUTION:**
**Never reuse retaining pin.**

35. Install drain plug according to the following procedures.

a. Install gasket to drain plug.
**CAUTION:**
**Never reuse gasket.**

b. Install drain plug to clutch housing, using a socket [Commercial service tool].

c. Tighten drain plug to the specified torque.

36. Install filler plug according to the following procedures.

a. Install gasket to filler plug, and then install them to transaxle case.
**CAUTION:**
**Never reuse gasket.**

b. Tighten filler plug to the specified torque.
**CAUTION:**
**Fill with gear oil before tighten filler plug to the specified torque.**

# INPUT SHAFT AND GEAR

## Exploded View

INFOID:0000000009948884

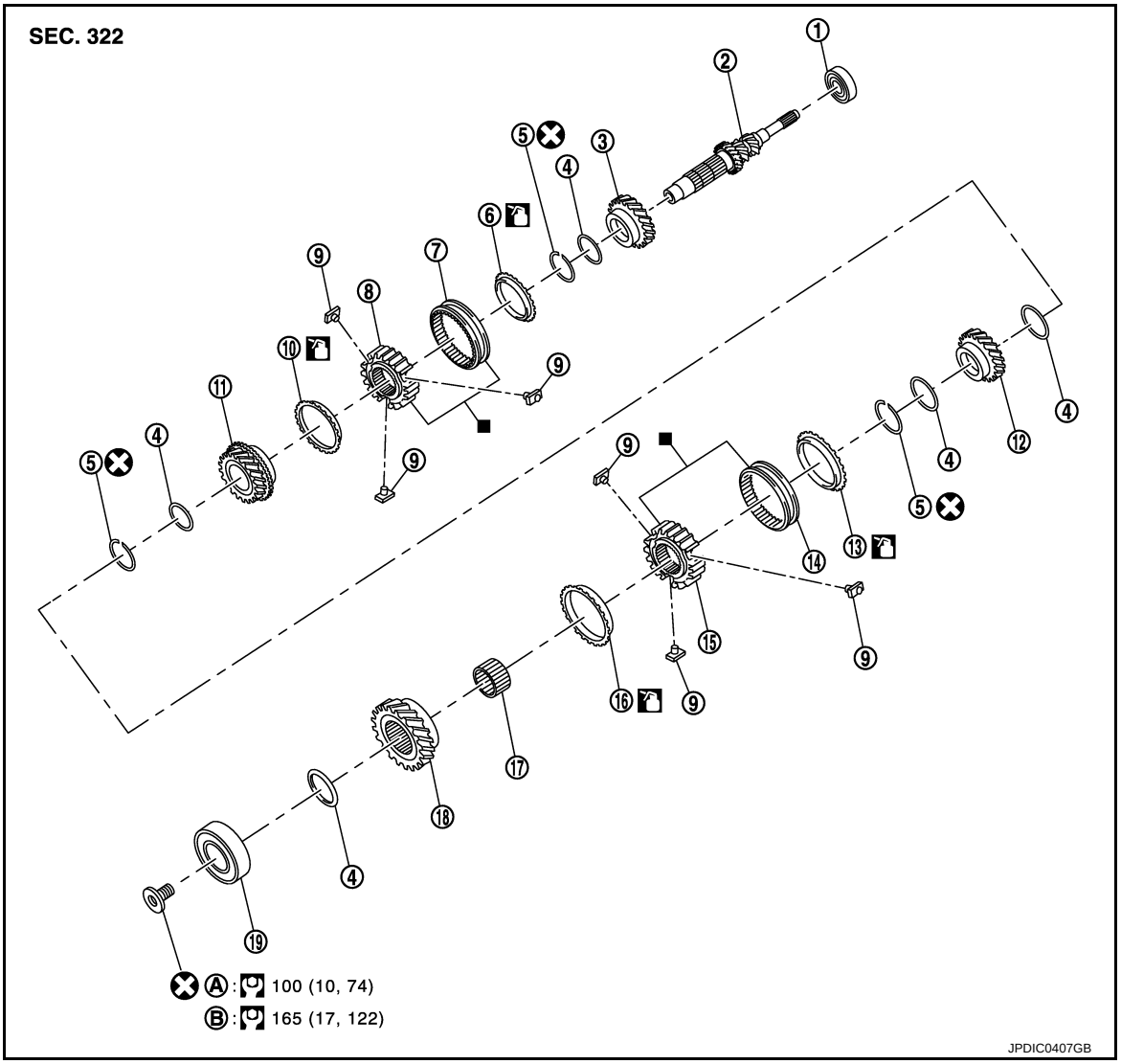


| | | |
|---|---|---|
| 1. Input shaft front bearing | 2. Input shaft | 3. 3rd input gear |
| 4. Spacer | 5. Snap ring | 6. 3rd baulk ring |
| 7. 3rd-4th coupling sleeve | 8. 3rd-4th synchronizer hub | 9. Insert key |
| 10. 4th baulk ring | 11. 4th input gear | 12. 5th input gear |
| 13. 5th baulk ring | 14. 5th-6th coupling sleeve | 15. 5th-6th synchronizer hub |
| 16. 6th baulk ring | 17. Needle bearing | 18. 6th input gear |
| 19. Input shaft rear bearing | | |
| A. First step | B. Final step | |

: Apply gear oil.

: Replace the parts as a set.

Refer to GI-4, "Components" for symbols not described on the above.

## Disassembly

INFOID:0000000009948885

**CAUTION:**

- **Fix input shaft in a vise with backplate, and then remove gears and snap rings.**

- **For removal of snap ring, set snap ring pliers and flat pliers at both sides of snap ring. While expanding snap ring with snap ring pliers, move snap ring with flat pliers.**
- **Disassemble gear components putting direction marks on the parts that do not affect any functions.**

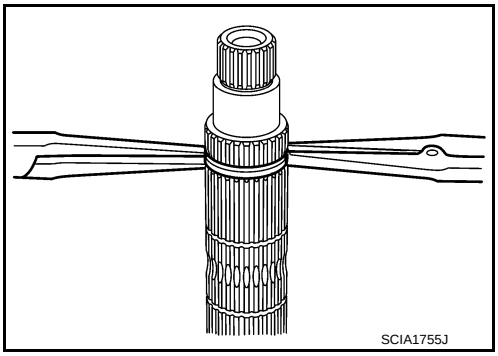


1. Remove input shaft rear bearing mounting bolt (1), using the drift (A) [SST: KV32300QAM ( - )].

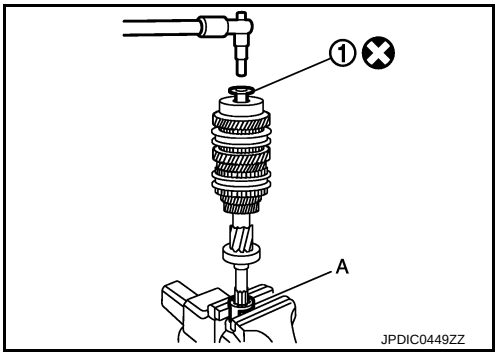


2. Remove input shaft rear bearing (1) according to the following procedures.

a. Set a puller [Commercial service tool] to input shaft rear bearing.

b. Remove input shaft rear bearing, using a drift (A) [Commercial service tool].

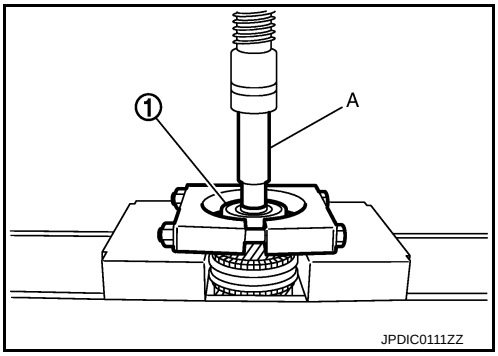


3. Remove spacer (1), 6th input gear (2), needle bearing, 6th baulk ring, and 5th-6th synchronizer hub assembly (3).

4. Remove insert keys and 5th-6th coupling sleeve from 5th-6th synchronizer hub.

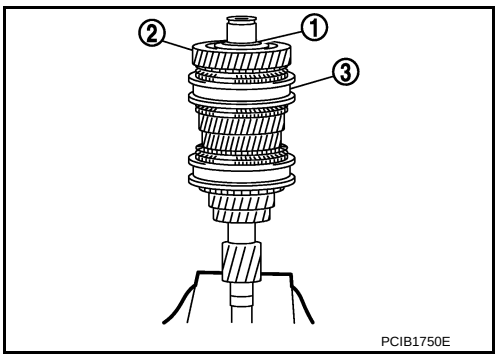


5. Remove snap ring (1).

6. Remove spacer, 5th baulk ring, 5th input gear (2), and spacer.

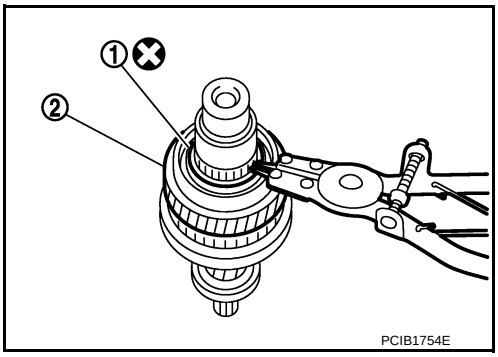

7. Remove snap ring (1).
8. Remove spacer, 4th input gear (2), 4th baulk ring, and 3rd-4th synchronizer hub assembly (3).
9. Remove insert keys and 3rd-4th coupling sleeve from 3rd-4th synchronizer hub.

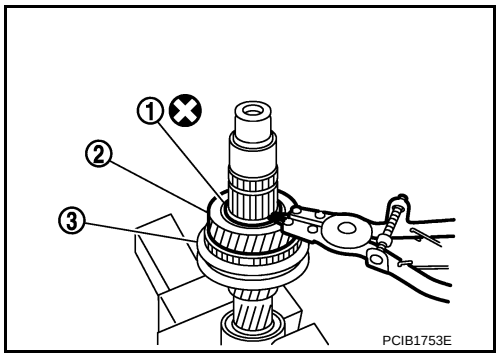


10. Remove snap ring (1).
11. Remove spacer, 3rd baulk ring, and 3rd input gear (2).

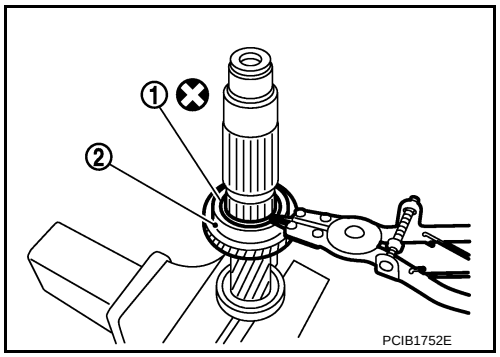


12. Set a puller [Commercial service tool] to input shaft front bearing (1), and then remove input shaft front bearing.

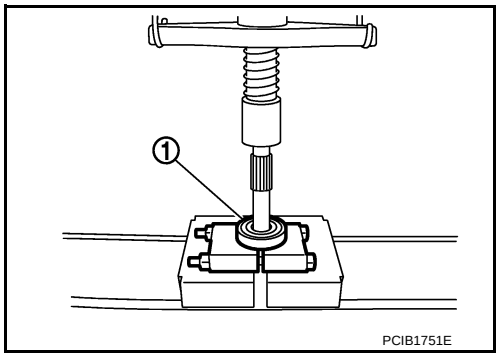


## Assembly

INFOID:0000000009948886

Note the following procedures, and assemble in the reverse order of disassembly.

**CAUTION:**

- **Replace transaxle assembly when replacing input shaft.**
- **For installation of snap ring, set snap ring pliers and flat pliers at both sides of snap ring. While expanding snap ring with snap ring pliers, move snap ring with flat pliers.**
- **Never reuse snap ring.**
- **Check that snap ring is securely installed in a groove.**
- **Replace 3rd-4th coupling sleeve and 3rd-4th synchronizer hub as a set.**
- **Replace 5th-6th coupling sleeve and 5th-6th synchronizer hub as a set.**

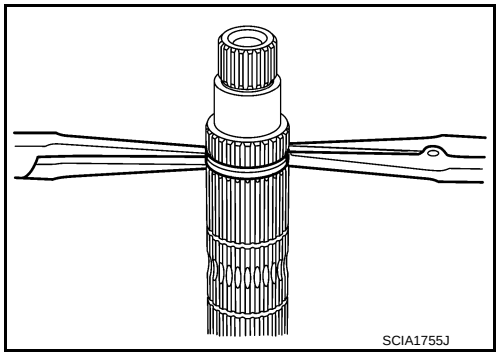

- **Be careful to install 3rd-4th synchronizer hub according to the specified direction.**

  A : 3rd input gear side
  B : 4th input gear side

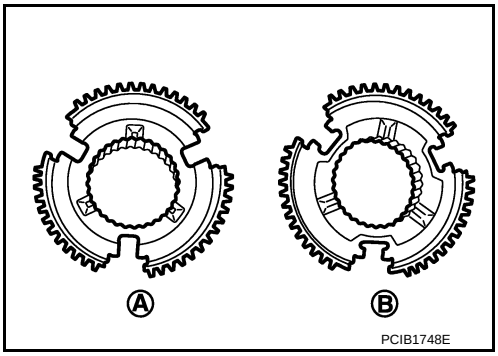


- **Be careful to install 5th-6th synchronizer hub according to the specified direction.**

  A : 5th input gear side
  B : 6th input gear side

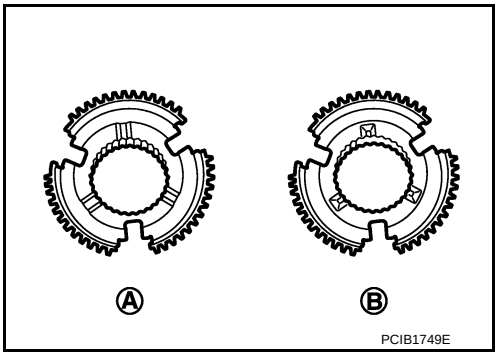


- Install input shaft front bearing (1), using a drift (A) [Commercial service tool].

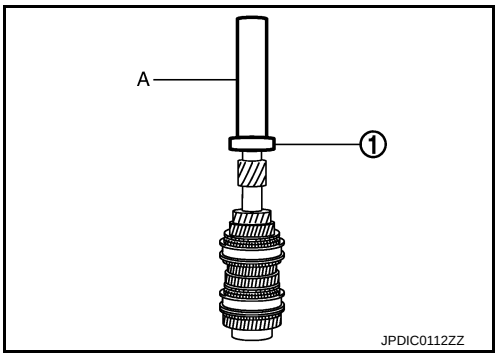


- Install input shaft rear bearing (1), using a drift (A) [Commercial service tool] and the drift (B) [SST: ST36720030 ( - )].
- Apply gear oil to 3rd baulk ring, 4th baulk ring, 5th baulk ring, and 6th baulk ring.

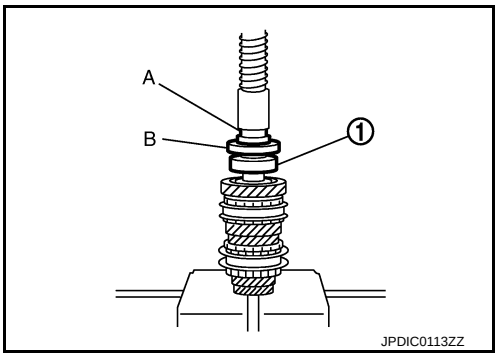

- Install input shaft rear bearing mounting bolt (1) according to the following procedures.

**CAUTION:**
**Follow the procedures. Otherwise it may cause a transaxle malfunction.**

1. Fix the drift (A) [SST: KV32300QAM ( - )] in a vise, and then set input shaft assembly.
2. Install input shaft rear bearing mounting bolt, and then tighten it to the specified torque of the first step.
3. Loosen input shaft rear bearing mounting bolt by a half turn.
4. Tighten input shaft rear bearing mounting bolt to the specified torque of the final step.

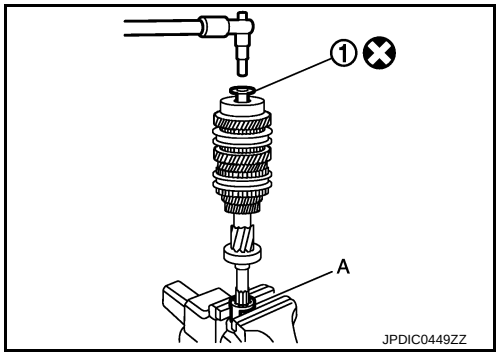


## Inspection

INFOID:0000000009948887

### INSPECTION AFTER DISASSEMBLY

Input shaft and gear

Check the following items and replace if necessary.

- Damage, peeling, bend, uneven wear, and distortion of shaft.
- Excessive wear, damage, and peeling of gear.

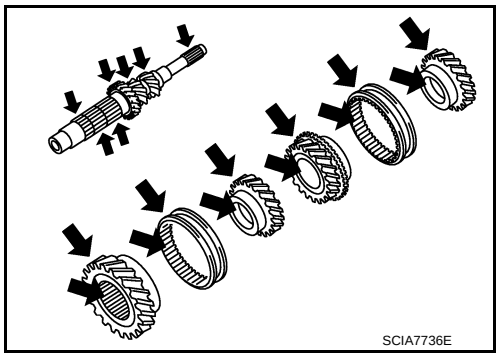


Synchronizer hub and coupling sleeve

Check the following items and replace if necessary.

- Breakage, damage, and unusual wear on contact surface of coupling sleeve, synchronizer hub, and insert key.
- Coupling sleeve and synchronizer hub move smoothly.

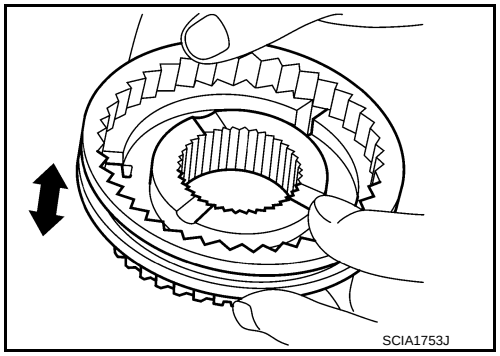


Baulk ring

Check contact surface of baulk ring cam and insert key for excessive wear, uneven wear, bend, and damage. Replace if necessary.

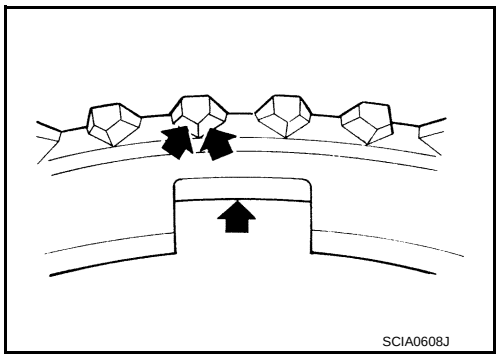


Bearing

Check bearing for damage and unsmooth rotation. Replace if necessary.

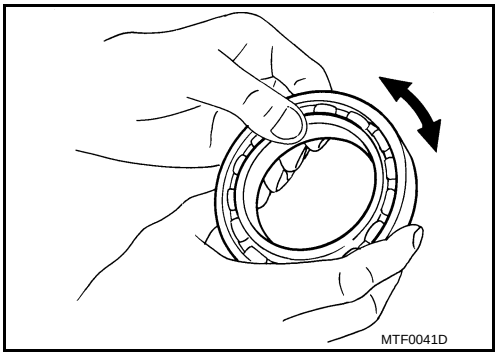

# MAINSHAFT AND GEAR

## Exploded View

INFOID:0000000009948888

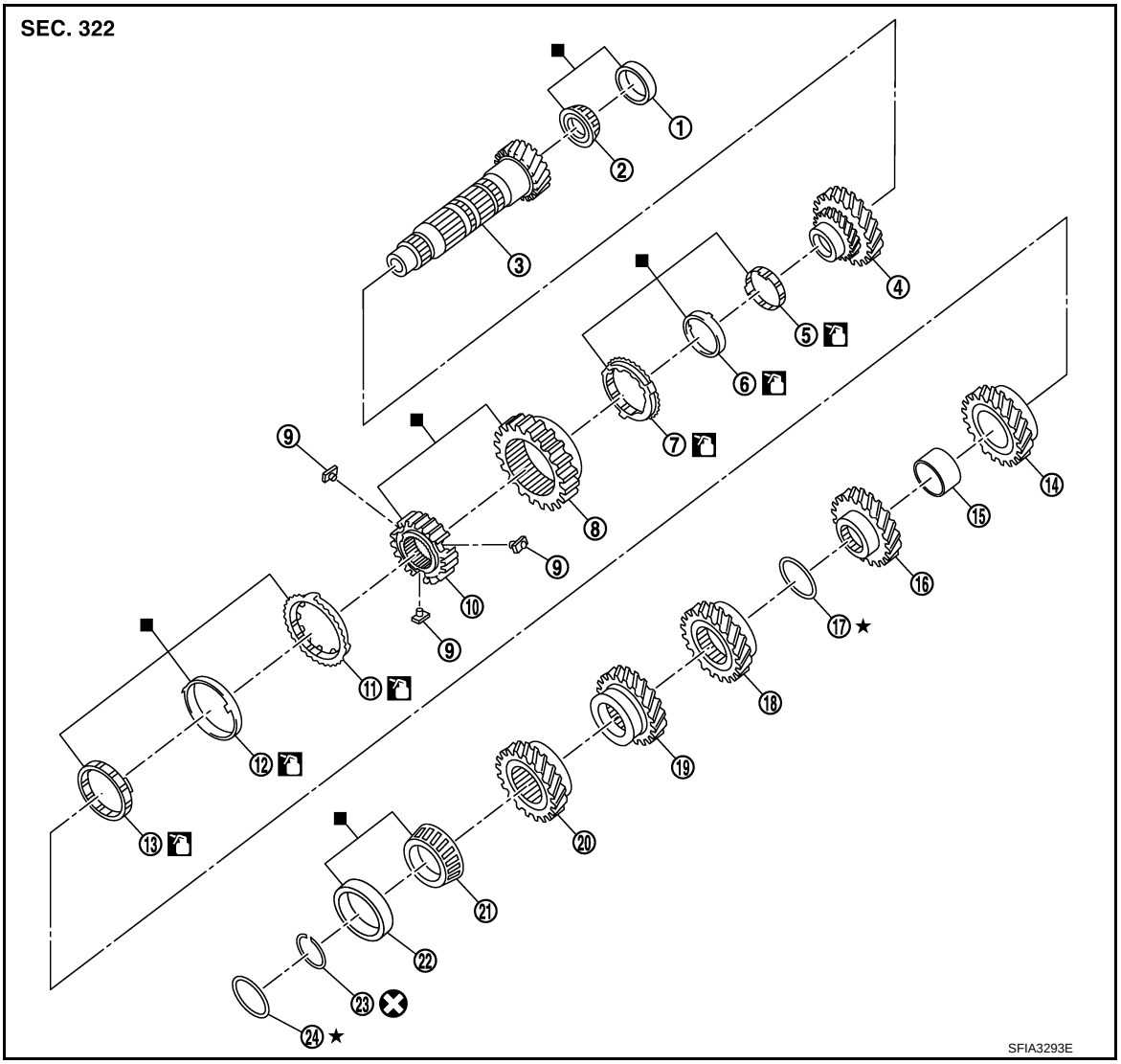


| | | | | | |
|---|---|---|---|---|---|
| 1. | Mainshaft front bearing outer race | 2. | Mainshaft front bearing inner race | 3. | Mainshaft |
| 4. | 1st main gear | 5. | 1st inner baulk ring | 6. | 1st synchronizer cone |
| 7. | 1st outer baulk ring | 8. | 1st-2nd coupling sleeve | 9. | Insert key |
| 10. | 1st-2nd synchronizer hub | 11. | 2nd outer baulk ring | 12. | 2nd synchronizer cone |
| 13. | 2nd inner baulk ring | 14. | 2nd main gear | 15. | Bushing |
| 16. | 3rd main gear | 17. | Mainshaft adjusting shim | 18. | 4th main gear |
| 19. | 5th main gear | 20. | 6th main gear | 21. | Mainshaft rear bearing inner race |
| 22. | Mainshaft rear bearing outer race | 23. | Snap ring | 24. | Mainshaft rear bearing adjusting shim |

: Apply gear oil.

: Replace the parts as a set.

Refer to GI-4, "Components" for symbols not described on the above.

## Disassembly

INFOID:0000000009948889

**CAUTION:**

- **Fix mainshaft in a vise with backplate, and then remove gears and snap rings.**
- **For removal of snap ring, set snap ring pliers and flat pliers at both sides of snap ring. While expanding snap ring with snap ring pliers, move snap ring with flat pliers.**
- **Disassemble gear components putting direction marks on the parts that never affect any functions.**

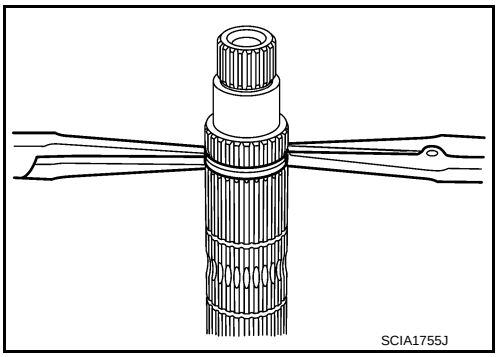


1. Remove snap ring (1).

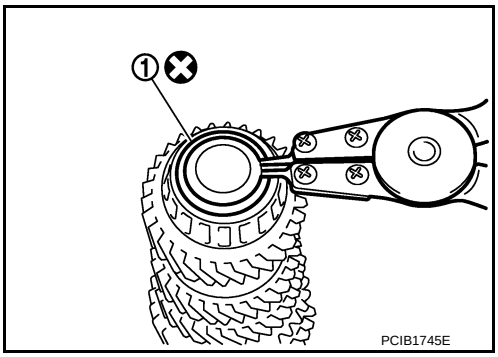


2. Remove 6th main gear (1) and mainshaft rear bearing inner race (2) according to the following procedures.

a. Set a puller [Commercial service tool] to 6th main gear.

b. Remove mainshaft rear bearing inner race and 6th main gear, using the drift (A) [SST: ST33052000 ( - )].

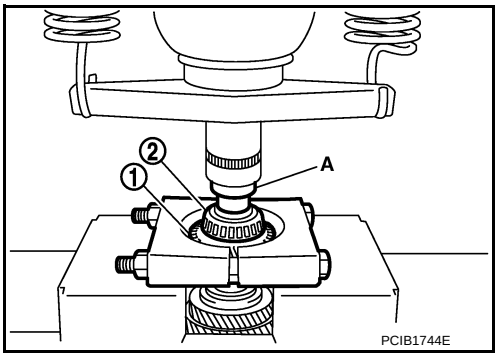


3. Remove 4th main gear (1) and 5th main gear (2) according to the following procedures.

a. Set a puller [Commercial service tool] to 4th main gear.

b. Remove 5th main gear and 4th main gear, using the drift (A) [SST: ST33052000 ( - )].

4. Remove mainshaft adjusting shim.

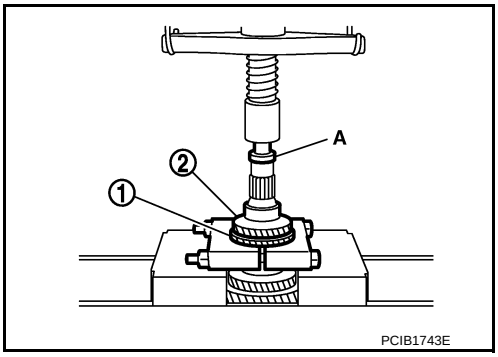

5. Remove 1st main gear (1), 1st-2nd synchronizer hub assembly (2), 2nd main gear (3), and 3rd main gear (4) according to the following procedures.

a. Set a puller [Commercial service tool] to 1st main gear.

b. Remove 3rd main gear, bushing, 2nd main gear, 2nd inner baulk ring, 2nd synchronizer cone, 2nd outer baulk ring, 1st-2nd synchronizer hub assembly, 1st outer baulk ring, 1st synchronizer cone, 1st inner baulk ring, and 1st main gear, using the drift (A) [SST: ST33052000 ( - )].

c. Remove insert keys and 1st-2nd coupling sleeve from 1st-2nd synchronizer hub.

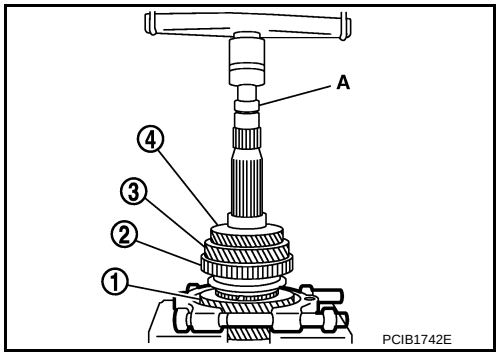


6. Remove mainshaft front bearing inner race (1) according to the following procedures.

a. Set a puller [Commercial service tool] to mainshaft front bearing inner race.

b. Remove mainshaft front bearing inner race, using the drift (A) [SST: ST33052000 ( - )].

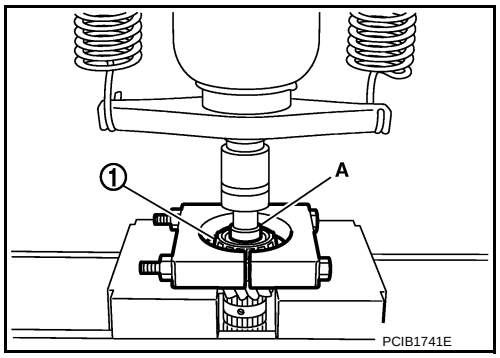


## Assembly

INFOID:0000000009948890

**CAUTION:**

- **Select mainshaft rear bearing adjusting shim according to the following procedures when replacing mainshaft adjusting shim, 6th main gear, 5th main gear, or 4th main gear.**
- **Replace mainshaft adjusting shim.**
- **If new mainshaft adjusting shim is thinner than previous one, offset the thickness difference by selecting thicker mainshaft rear bearing adjusting shim.**
- **If new mainshaft adjusting shim is thicker than previous one, offset the thickness difference by selecting thinner mainshaft rear bearing adjusting shim.**
- **Replace 6th main gear, 5th main gear, or 4th main gear.**
- **Measure the thickness of the main gear used before and the new main gear**
- **Increase the thickness of the mainshaft rear bearing adjusting shim, if the difference is smaller than 0.025 mm (0.0010 in).**
- **Replace transaxle assembly when replacing mainshaft.**
- **For installation of snap ring, set snap ring pliers and flat pliers at both sides of snap ring. While expanding snap ring with snap ring pliers, move snap ring with flat pliers.**

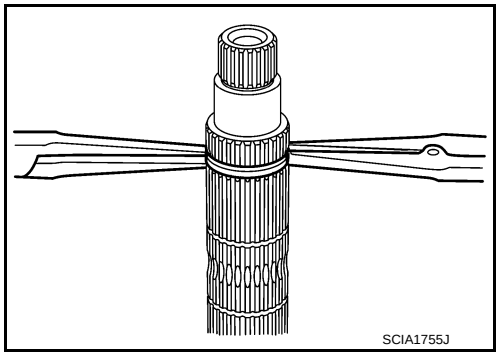

1. Install mainshaft front bearing inner race (1), using the drift (A) [SST: ST36720030 ( - )].
   **CAUTION:**
   **Replace mainshaft front bearing outer race and mainshaft front bearing inner race as a set.**
2. Apply gear oil to 1st inner baulk ring, 1st synchronizer cone, 1st outer baulk ring, 2nd inner baulk ring, 2nd synchronizer cone, and 2nd outer baulk ring.
   **CAUTION:**
   - **Replace 1st inner baulk ring, 1st synchronizer cone, and 1st outer baulk ring as a set.**
   - **Replace 2nd inner baulk ring, 2nd synchronizer cone, and 2nd outer baulk ring as a set.**

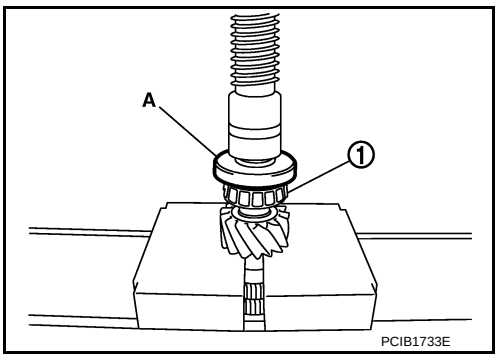


3. Install insert keys and 1st-2nd coupling sleeve to 1st-2nd synchronizer hub.
   **CAUTION:**
   **Replace 1st-2nd synchronizer hub and 1st-2nd coupling sleeve as a set.**
4. Install 1st main gear (1), 1st inner baulk ring, 1st synchronizer cone, 1st outer baulk ring, 1st-2nd synchronizer hub assembly (2), 2nd inner baulk ring, 2nd synchronizer cone, and 2nd outer baulk ring.
5. Install bushing (3), using the drift (A) [SST: KV32102700 ( - )].

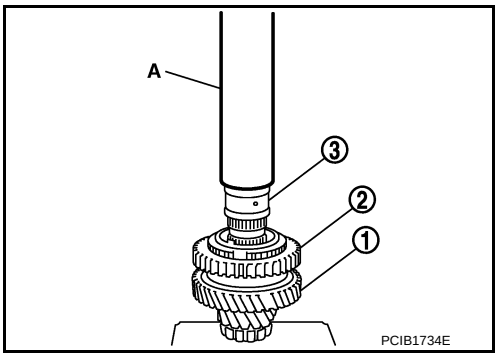


6. Install 3rd main gear (1) and 2nd main gear (2), using the drift (A) [SST: KV32102700 ( - )].

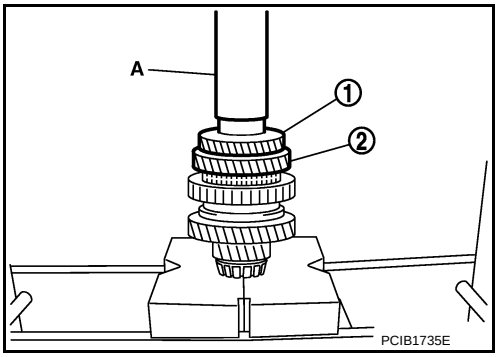


7. Measure dimension “L” as shown in the figure. Select mainshaft adjusting shim (1) according to the following list, and then install it to mainshaft.

   2 : Mainshaft
   3 : 3rd main gear

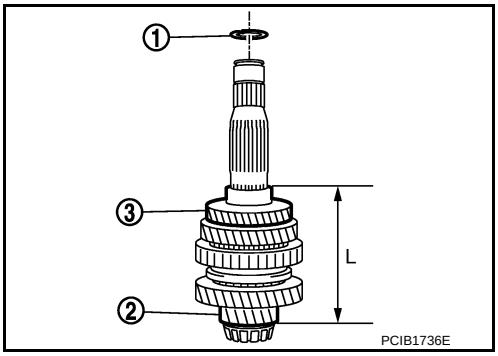


Unit: mm (in)

| Dimension “L” | Thickness of mainshaft adjusting shim |
|---|---|
| 147.690 – 147.666 (5.815 – 5.814) | 1.500 (0.0591) |
| 147.665 – 147.641 (5.814 – 5.813) | 1.525 (0.0600) |
| 147.640 – 147.616 (5.813 – 5.812) | 1.550 (0.0610) |
| 147.615 – 147.591 (5.812 – 5.811) | 1.575 (0.0620) |
| 147.590 – 147.566 (5.811 – 5.810) | 1.600 (0.0630) |
| 147.565 – 147.541 (5.810 – 5.809) | 1.625 (0.0640) |
| 147.540 – 147.516 (5.809 – 5.808) | 1.650 (0.0650) |
| 147.515 – 147.491 (5.808 – 5.807) | 1.675 (0.0659) |

| Dimension “L” | Thickness of mainshaft adjusting shim |
|---|---|
| 147.490 – 147.466 (5.807 – 5.806) | 1.700 (0.0669) |
| 147.465 – 147.441 (5.806 – 5.805) | 1.725 (0.0679) |
| 147.440 – 147.416 (5.805 – 5.804) | 1.750 (0.0689) |
| 147.415 – 147.391 (5.804 – 5.803) | 1.775 (0.0699) |

8. Install 4th main gear (1), using the drift (A) [SST: KV32102700 ( - )].

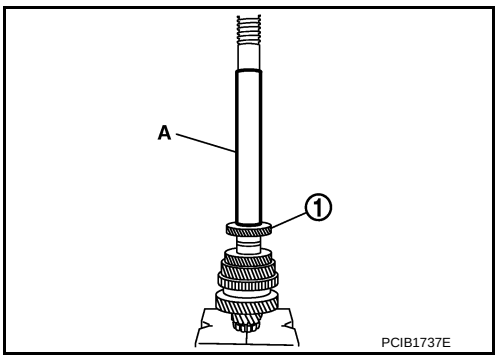


9. Install 5th main gear (1), using the drift (A) [SST: KV32102700 ( - )].

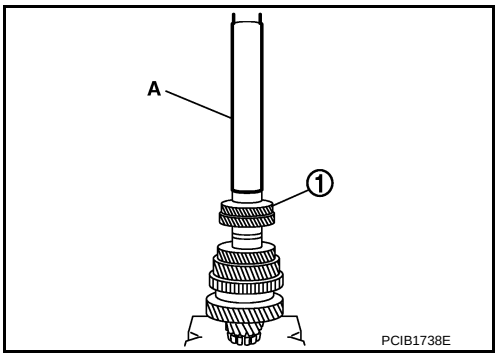


10. Install 6th main gear (1), using the drift (A) [SST: KV32102700 ( - )].

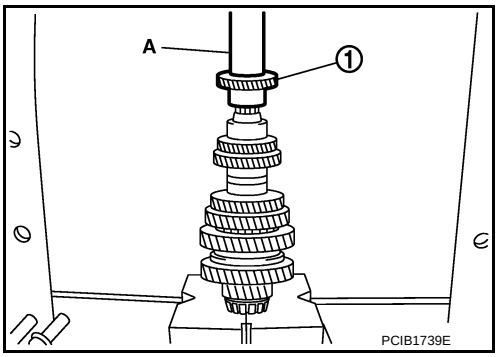


11. Install mainshaft rear bearing inner race (1), using the drift (A) [SST: ST30901000 (J-26010-01)].
**CAUTION:**
**Replace mainshaft rear bearing inner race and mainshaft rear bearing outer race as a set.**
12. Install snap ring.
**CAUTION:**
**Never reuse snap ring.**

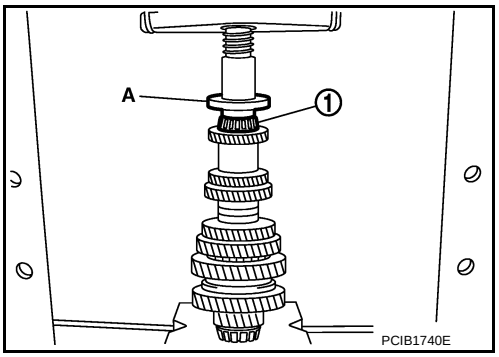


## Inspection

INFOID:0000000009948891

### INSPECTION AFTER DISASSEMBLY

Mainshaft and Gear

Check the following items and replace if necessary.
- Damage, peeling, bend, uneven wear, and distortion of shaft.
- Excessive wear, damage, and peeling of gear.

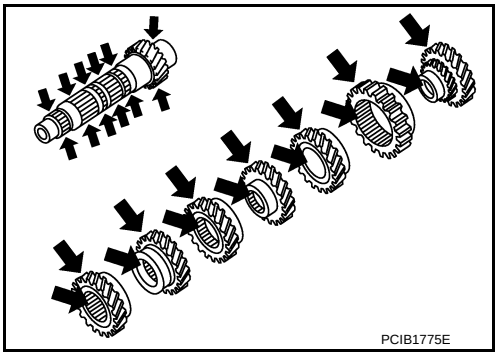


Synchronizer hub and coupling sleeve

Check the following items and replace if necessary.
- Breakage, damage, and unusual wear on contact surface of coupling sleeve, synchronizer hub, and insert key.
- Coupling sleeve and synchronizer hub move smoothly.

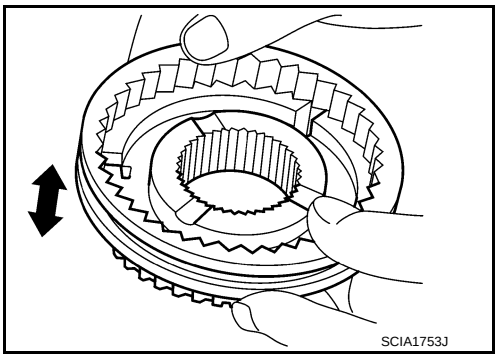


Baulk ring

Check contact surface of baulk ring cam and insert key for excessive wear, uneven wear, bend, and damage. Replace if necessary.

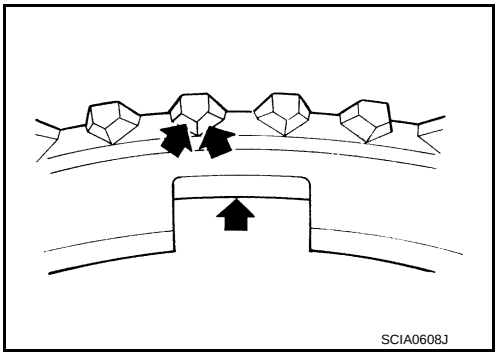


Bearing

Check bearing for damage and unsmooth rotation. Replace if necessary.

**CAUTION:**
- **Replace mainshaft front bearing outer race and mainshaft front bearing inner race as a set.**
- **Replace mainshaft rear bearing inner race and mainshaft rear bearing outer race as a set.**

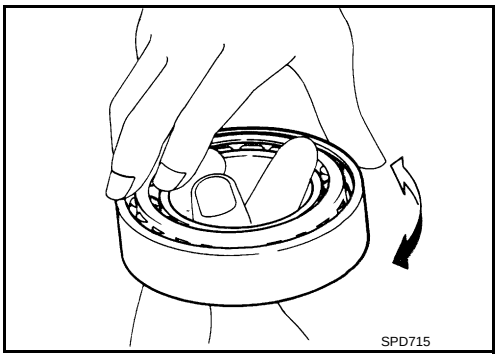

# REVERSE IDLER SHAFT AND GEAR

## Exploded View

INFOID:0000000009948892

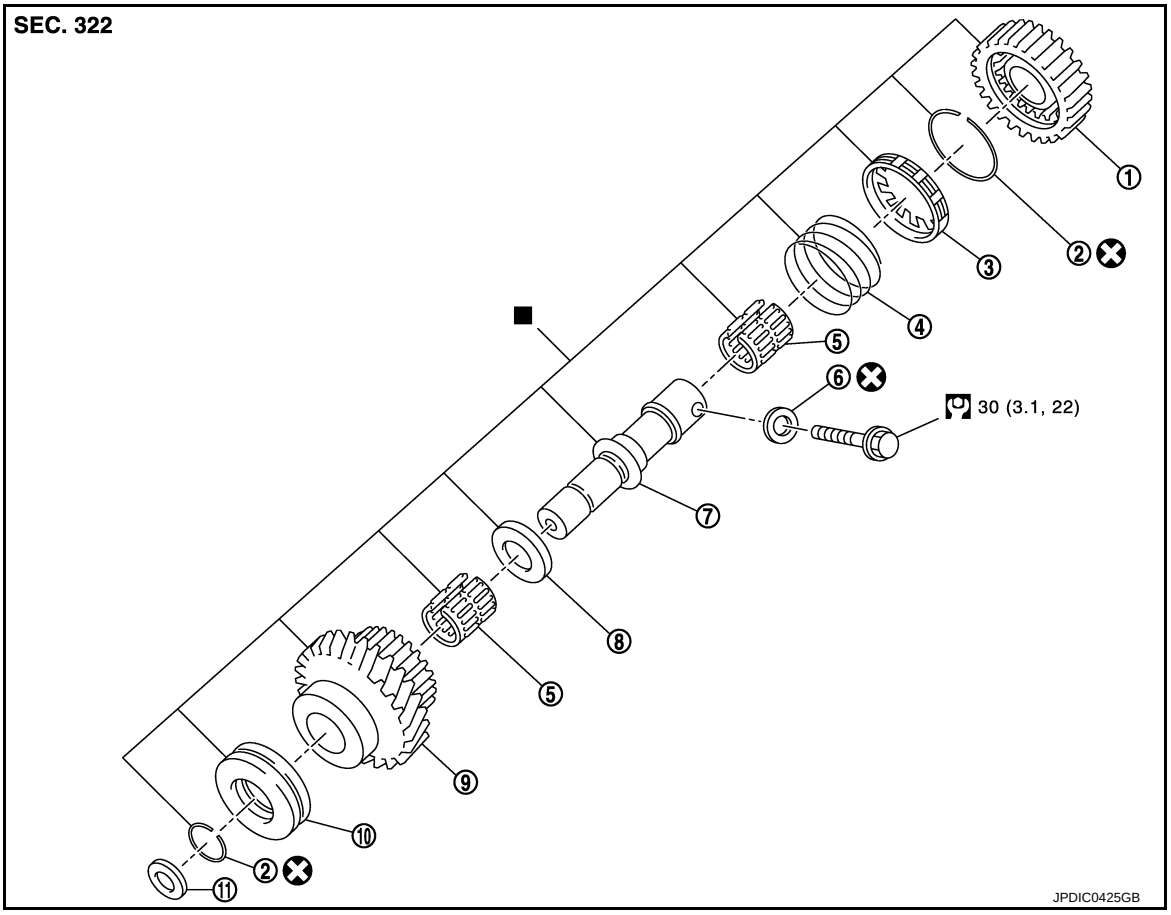


| | | |
|---|---|---|
| 1. Reverse output gear | 2. Snap ring | 3. Reverse baulk ring |
| 4. Return spring | 5. Needle bearing | 6. Seal washer |
| 7. Reverse idler shaft | 8. Spacer | 9. Reverse input gear |
| 10. Lock washer | 11. Spring washer | |

■: Replace the parts as a set.

Refer to GI-4, "Components" for symbols not described on the above.

## Disassembly

INFOID:0000000009948893

1. Remove reverse output gear (1).

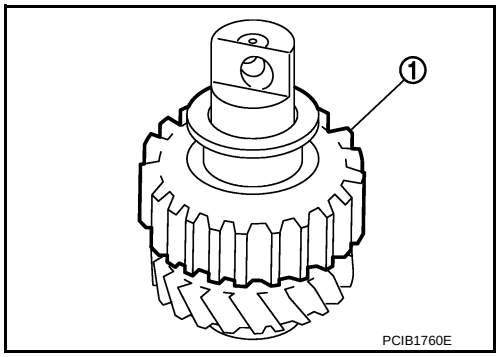

2. Remove snap ring (1).

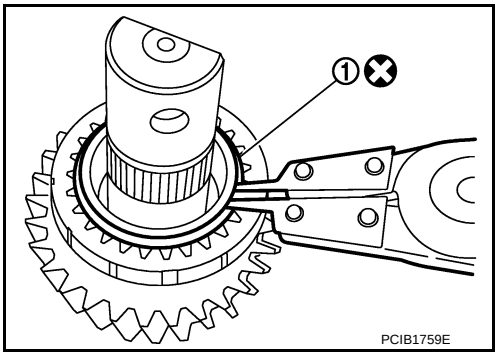


3. Remove reverse baulk ring (1) and return spring (2).

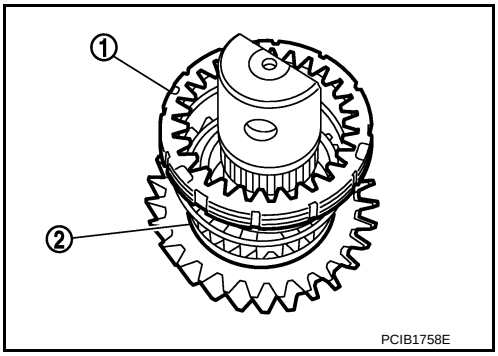


4. Remove snap ring (1), lock washer (2), and reverse input gear (3).

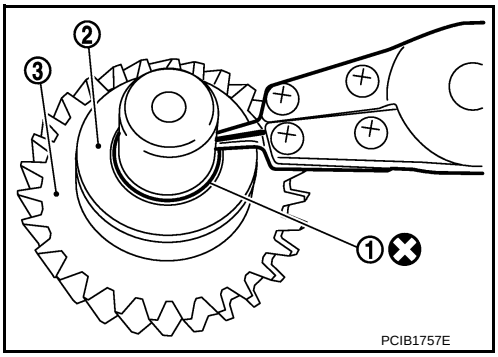


5. Remove needle bearings (1) and washer.

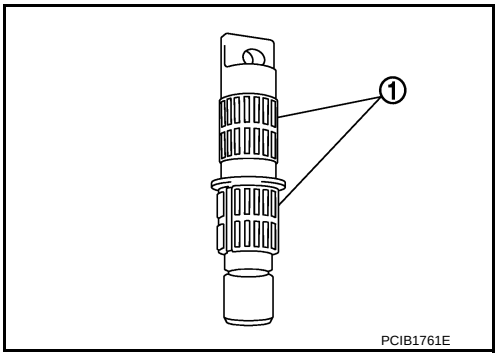


## Assembly

INFOID:0000000009948894

Note the following procedures, and assemble in the reverse order of disassembly.

**CAUTION:**

- **Never reuse snap ring.**
- **Check that snap ring is securely installed in a groove.**
- **Replace reverse output gear, snap ring, reverse baulk ring, return spring, needle bearing, reverse idler shaft, spacer, reverse input gear, and lock washer as a set.**

## Inspection

INFOID:0000000009948895

INSPECTION AFTER DISASSEMBLY

Shaft and Gear

Check the following items. Replace reverse output gear, snap ring, reverse baulk ring, return spring, needle bearing, reverse idler shaft, spacer, reverse input gear, and lock washer as a set, if necessary.

- Damage, peeling, bend, uneven wear, and distortion of shaft
- Excessive wear, damage, and peeling of gear

Bearing

Check damage and rotation of bearing. Replace reverse output gear, snap ring, reverse baulk ring, return spring, needle bearing, reverse idler shaft, spacer, reverse input gear, and lock washer as a set, if necessary.

# FINAL DRIVE

## Exploded View

INFOID:0000000009948896

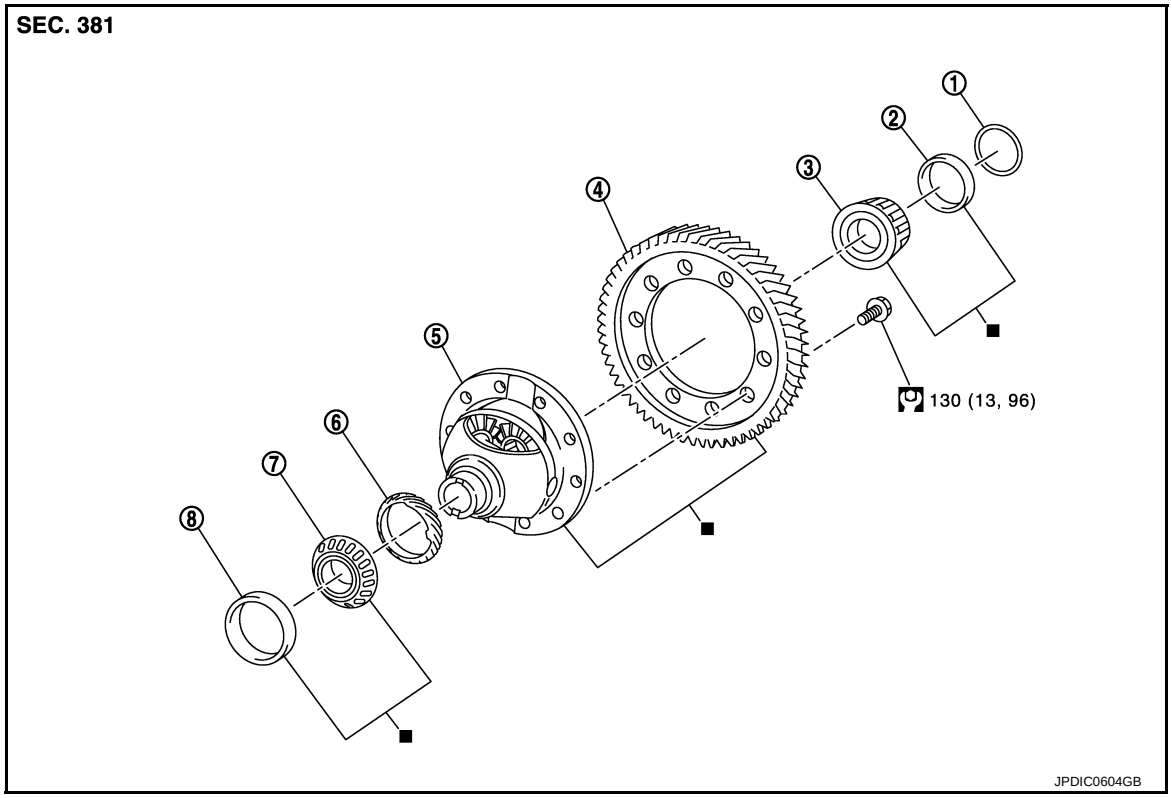


1. Shim
2. Differential side bearing outer race (transaxle case side)
3. Differential side bearing inner race (transaxle case side)
4. Final gear
5. Differential case
6. Speedometer drive gear
7. Differential side bearing inner race (clutch housing side)
8. Differential side bearing outer race (clutch housing side)

■: Replace the parts as a set.

Refer to GI-4, "Components" for symbols not described on the above.

## Disassembly

INFOID:0000000009948897

1. Remove differential side bearing inner race (clutch housing side) (1) according to the following procedures.

a. Set a puller [Commercial service tool] to differential side bearing inner race (clutch housing side).

b. Remove differential side bearing inner race (clutch housing side), using the drift (A) [SST: ST33061000 (J-8107-2)].

2. Remove speedometer drive gear.

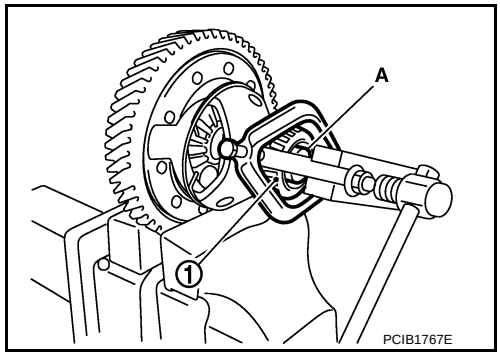

3. Remove final gear mounting bolts, and then remove final gear (1).

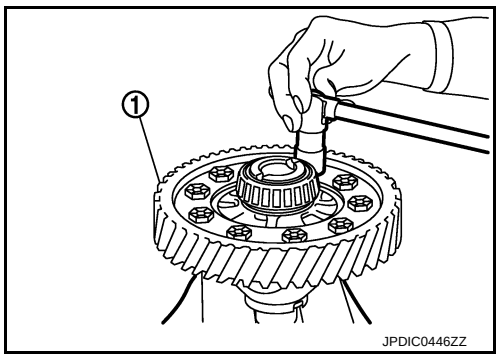


4. Remove differential side bearing inner race (transaxle case side) (1) according to the following procedures.
a. Set a puller [Commercial service tool] to differential side bearing inner race (transaxle case side).
b. Remove differential side bearing inner race (transaxle case side), using a drift (A) [Commercial service tool].

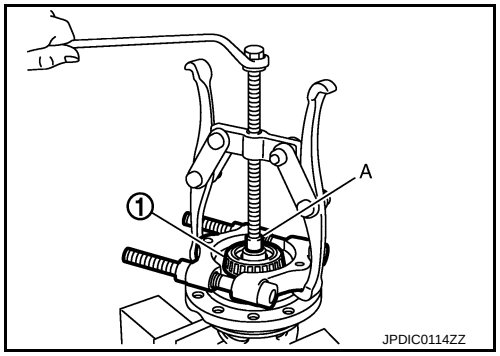


## Assembly

INFOID:0000000009948898

1. Install final gear, and then tighten final gear mounting bolts to the specified torque.
**CAUTION:**
**Replace final gear and differential case as a set.**
2. Install speedometer drive gear.
3. Install differential side bearing inner race (clutch housing side), using a drift (A) [Commercial service tool].
**CAUTION:**
**Replace differential side bearing inner race (clutch housing side) and differential side bearing outer race (clutch housing side) as a set.**

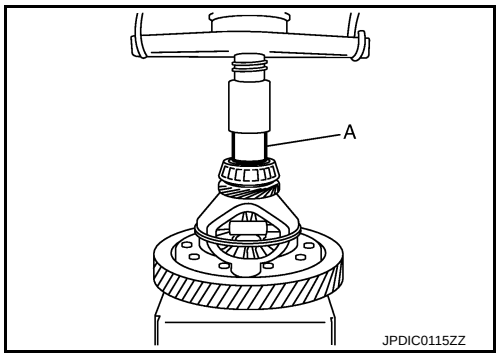


4. Install differential side bearing inner race (transaxle case side), using a drift (A) [Commercial service tool].
**CAUTION:**
**Replace differential side bearing inner race (transaxle case side) and differential side bearing outer race (transaxle case side) as a set.**

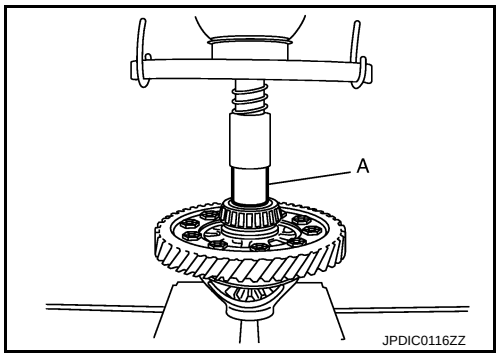


## Inspection

INFOID:0000000009948899

### INSPECTION AFTER DISASSEMBLY

Gear and Case

Check final gear and differential case. Replace if necessary.

Bearing

Check bearing for damage and unsmooth rotation. Replace if necessary.

**CAUTION:**

- **Replace differential side bearing outer race (clutch housing side) and differential side bearing inner race (clutch housing side) as a set.**
- **Replace differential side bearing inner race (transaxle case side) and differential side bearing outer race (transaxle case side) as a set.**

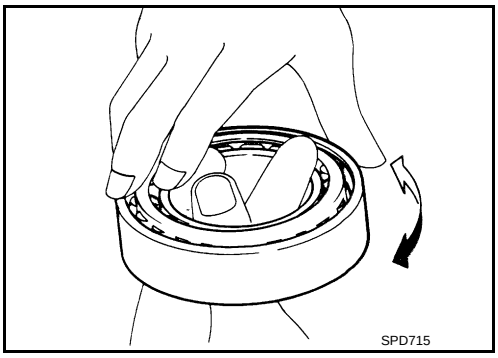

# SHIFT FORK AND FORK ROD

## Exploded View

INFOID:0000000009948900

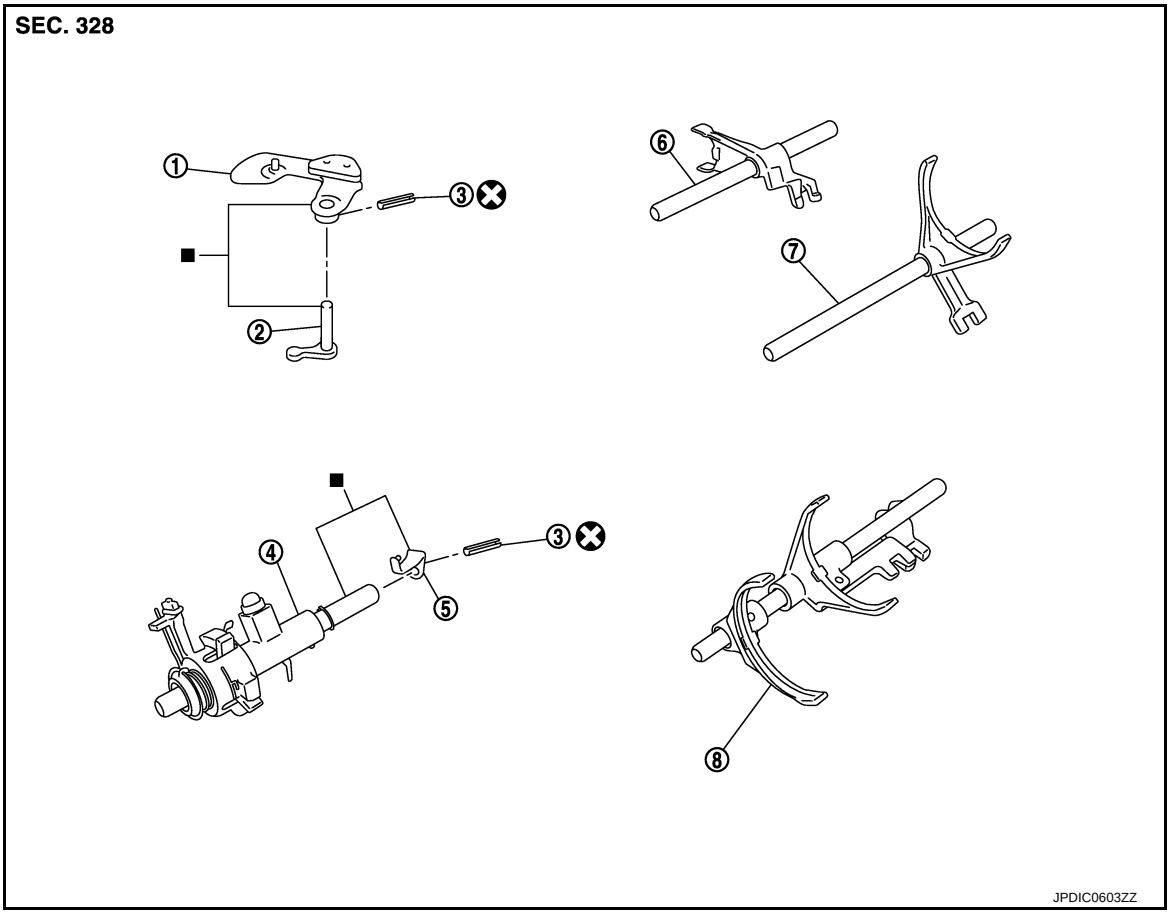


1. Shifter lever A
2. Shifter lever B
3. Retaining pin
4. Selector
5. Selector lever
6. Reverse fork rod
7. 1st-2nd fork rod
8. Fork rod

■: Replace the parts as a set.

Refer to GI-4, "Components" for symbols not described on the above.

## Disassembly

INFOID:0000000009948901

Refer to TM-32, "Disassembly" for disassembly procedure.

## Assembly

INFOID:0000000009948902

Refer to TM-37, "Assembly" for assembly procedure.

## Inspection

INFOID:0000000009948903

### INSPECTION AFTER DISASSEMBLY

Check contact surface and sliding surface for excessive wear, uneven wear, bend, and damage. Replace if necessary.

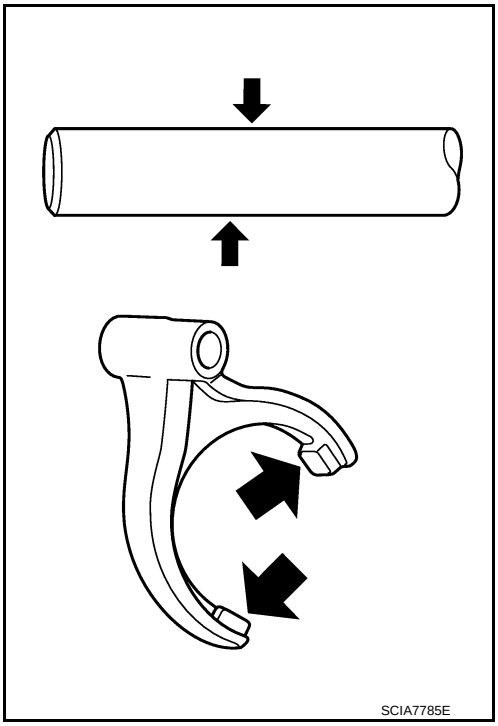

# SERVICE DATA AND SPECIFICATIONS (SDS)

## SERVICE DATA AND SPECIFICATIONS (SDS)

### General Specification

INFOID:0000000009948904

| | | | |
|---|---|---|---|
| Transaxle type | | | RS6F94R |
| Engine type | | | MR18DE |
| Number of speed | | | 6 |
| Synchromesh type | | | Warner |
| Shift pattern | | | 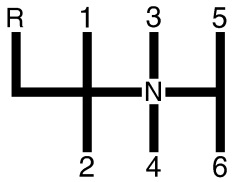 <br>PCIB1769E |
| Gear ratio | 1st | | 3.727 |
| | 2nd | | 2.105 |
| | 3rd | | 1.452 |
| | 4th | | 1.171 |
| | 5th | | 0.971 |
| | 6th | | 0.811 |
| | Reverse | | 3.687 |
| | Final gear | | 3.933 |
| Number of teeth | Input gear | 1st | 11 |
| | | 2nd | 19 |
| | | 3rd | 31 |
| | | 4th | 35 |
| | | 5th | 35 |
| | | 6th | 37 |
| | | Reverse | 11 |
| | Main gear | 1st | 41 |
| | | 2nd | 40 |
| | | 3rd | 45 |
| | | 4th | 41 |
| | | 5th | 34 |
| | | 6th | 30 |
| | | Reverse | 42 |
| | Reverse idler gear | Input/Output | 28/29 |
| | Final gear | Final gear/Pinion | 59/15 |
| | | Side gear/Pinion mate gear | 21/18 |
| Oil capacity (Reference) | | ℓ (US pt, Imp pt) | Approx. 2.0 (4-1/4, 3-1/2) |
| Remarks | Reverse synchronizer | | Installed |
| | Triple-cone synchronizer | | 1st and 2nd |

# BASIC INSPECTION

## DIAGNOSIS AND REPAIR WORK FLOW

### Work Flow

INFOID:0000000009948905

BEFORE STARTING TROUBLE DIAGNOSIS

- TCM receives signals from sensor, switch, and others to control gear shifting and lock-up with a solenoid. Therefore, input and output signals during CVT activation must be correct and stable. In addition, valves must be free from adhesion and solenoids must have no malfunctions for CVT system to operate normally.
- It is more difficult to diagnose intermittent malfunctions than continuous ones. These kinds of malfunctions often occur due to poor electrical connections or improper wiring. If this is the case, it is necessary to check the related circuit carefully and not to replace a normal part by mistake.
- When a visual check is not sufficient, connect CONSULT (or GST) and circuit tester according to “DETAILED FLOW” and perform “ROAD TEST”. (Refer to TM-211, "Description".)
- For a complaint regarding drivability, always take time to talk with the customer before starting trouble diagnoses. Helpful information, especially for diagnosing intermittent malfunctions, can be obtained from the customer.
- Use the attached “Diagnostic Work Sheet” to specifically find out what malfunction occurs under what conditions. (Refer to TM-65, "Diagnostic Work Sheet".)
- Starting with the inspection of basic items facilitates diagnoses of malfunctions in electrically controlled vehicle drivability.

DETAILED FLOW

#### 1. OBTAIN INFORMATION ABOUT SYMPTOM

1. Refer to TM-65, "Diagnostic Work Sheet" and interview the customer to obtain the malfunction information (conditions and environment when the malfunction occurred) as much as possible when the customer brings in the vehicle.
2. Check the following:

- Service history
- Harnesses and connectors malfunction. Refer to GI-40, "Intermittent Incident".

>> GO TO 2.

#### 2. CHECK DTC

1. Before checking the malfunction, check whether any DTC exists.
2. If DTC exists, perform the following operations.

- Record the DTC and freeze frame data. (Print out the data using CONSULT and affix them to the Work Order Sheet.)
- Erase DTCs.
- Check the relationship between the cause that is clarified with DTC and the malfunction information described by the customer. TM-188, "Symptom Table" is effective.

3. Check the information of related service bulletins and others also.

Do malfunction information and DTC exist?

Malfunction information and DTC exist. >>GO TO 3.
Malfunction information exists, but not DTC. >>GO TO 4.
Malfunction information does not exist, but DTC does. >>GO TO 5.

#### 3. REPRODUCE MALFUNCTION SYMPTOM

Check any malfunction described by a customer, except those with DTC on the vehicle.
Also investigate whether the symptom is a fail-safe or normal operation. Refer to TM-184, "Fail-safe".
When a malfunction symptom is reproduced, the question sheet is effective. Refer to TM-65, "Diagnostic Work Sheet".
Verify the relationship between the symptom and the conditions in which the malfunction described by the customer occurs.

>> GO TO 5.

## 4. REPRODUCE MALFUNCTION SYMPTOM

Check the malfunction described by the customer on the vehicle.
Also investigate whether the symptom is a fail-safe or normal operation. Refer to TM-184, "Fail-safe".
When a malfunction symptom is reproduced, the question sheet is effective. Refer to TM-65, "Diagnostic Work Sheet".
Verify the relationship between the symptom and the conditions in which the malfunction described by the customer occurs.

>> GO TO 6.

## 5. PERFORM "DTC CONFIRMATION PROCEDURE"

Perform "DTC CONFIRMATION PROCEDURE" of the appropriate DTC to check if DTC is detected again.
Refer to TM-186, "DTC Inspection Priority Chart" when multiple DTCs are detected, and then determine the order for performing the diagnosis.

**NOTE:**
If no DTC is detected, refer to the freeze frame data.

Is any DTC detected?

YES >> GO TO 7.
NO >> Check according to GI-40, "Intermittent Incident".

## 6. IDENTIFY MALFUNCTIONING SYSTEM WITH "DIAGNOSIS CHART BY SYMPTOM"

Use TM-188, "Symptom Table" from the symptom inspection result in step 4. Then identify where to start performing the diagnosis based on possible causes and symptoms.

>> GO TO 8.

## 7. REPAIR OR REPLACE THE MALFUNCTIONING PARTS

Repair or replace the detected malfunctioning parts.
Reconnect parts or connector after repairing or replacing, and then erase DTC if necessary.

>> GO TO 8.

## 8. FINAL CHECK

Perform "DTC CONFIRMATION PROCEDURE" again to make sure that the repair is correctly performed.
Check that malfunctions are not reproduced when obtaining the malfunction information from the customer, referring to the symptom inspection result in step 3 or 4.

Is DTC or malfunction symptom reproduced?

YES-1 (DTC is reproduced)>>GO TO 5.
YES-2 (Malfunction symptom is reproduced)>>GO TO 6.
NO >> Before delivering the vehicle to the customer, make sure that DTC is erased.

# Diagnostic Work Sheet

INFOID:0000000009948906

## DESCRIPTION

There are many operating conditions that may cause a malfunction of the transaxle parts. By understanding those conditions properly, a quick and exact diagnosis can be achieved.
In general, customers have their own criteria for a problem. Therefore, it is important to understand the symptom and status well enough by asking the customer about the concerns carefully. In order to systemize all the information for the diagnosis, prepare the question sheet referring to the question points.

**KEY POINTS**

**WHAT** ..... Vehicle & engine model
**WHEN** ..... Date, Frequencies
**WHERE**..... Road conditions
**HOW** ..... Operating conditions, Weather conditions, Symptoms

SEF907L

## WORKSHEET SAMPLE

| Question Sheet | | | | | | |
|---|---|---|---|---|---|---|
| Customer name MR/MS | | Registration number | | | Manuf. Date | |
| | | VIN | | | Model & Year | |
| In Service Date | | Engine | | | Mileage | km / Mile |
| Symptoms | | ☐ Vehicle does not move (☐ Any position ☐ Particular position ) | | | | |
| | | ☐ No up-shift | ☐ No down-shift | | | |
| | | ☐ Lock-up malfunction | | | | |
| | | ☐ Shift point too high | ☐ Shift point too low | | | |
| | | ☐ Shift shock (☐ N → D ☐ N → R ☐ Lock-up ☐ R, D, L, Manual position) | | | | |
| | | ☐ Slip (☐ N → D ☐ N → R ☐ Lock-up ☐ R, D, L, Manual position) | | | | |
| | | ☐ Noise | ☐ Vibration | | | |
| | | ☐ No pattern select | | | | |
| | | ☐ Others<br>( ) | | | | |
| First occurrence | | ☐ Recently (Indicate approximate month and year) | | | | |
| Frequency | | ☐ All the time ☐ Under certain conditions ☐ Sometimes ( times a day) | | | | |
| Weather conditions | | ☐ Not affected | | | | |
| | Weather | ☐ Fine | ☐ Clouding | ☐ Raining | ☐ Snowing | ☐ Other ( ) |
| | Temp. | ☐ Hot | ☐ Warm | ☐ Cool | ☐ Cold | ☐ Temp. [Approx. °C ( °F)] |
| | Humidity | ☐ High | ☐ Middle | ☐ Low | | |
| Transaxle conditions | | ☐ Cold | ☐ During warm-up | | ☐ After warm-up | |
| | | ☐ Engine speed ( rpm) | | | | |
| Road conditions | | ☐ In town | ☐ In suburbs | ☐ Freeway | ☐ Off road (Up / Down) | |
| Driving conditions | | ☐ Not affected | | | | |
| | | ☐ At starting | ☐ While idling | ☐ While engine racing | ☐ At racing | ☐ While cruising |
| | | ☐ While accelerating | | ☐ While decelerating | ☐ While turning (Right / Left) | |
| | | ☐ Vehicle speed [ km/h ( MPH)] | | | | |
| Other conditions | | | | | | |

# ADDITIONAL SERVICE WHEN REPLACING TCM

## Description

INFOID:0000000009948907

When replacing the TCM, perform the following work.

LOADING AND STORING OF CALIBRATION DATA

- The TCM acquires calibration data (individual characteristic value) of each solenoid that is stored in the ROM assembly (in the control valve). This enables the TCM to perform accurate control. After the TCM is replaced, check that the calibration data is correctly loaded and stored.

**CAUTION:**

**When replacing TCM and transaxle assembly as a set, replace transaxle assembly first and then replace TCM.**

**If the TCM is replaced in advance, perform "ADDITIONAL SERVICE WHEN REPLACING TRANSAXLE ASSEMBLY". Refer to TM-68, "Description".**

## Procedure

INFOID:0000000009948908

**CAUTION:**

**Immediately after TCM is replaced or after transaxle assembly is replaced (after TCM initialization is complete), self-diagnosis result of "P1701", "P1709" may be displayed. In this case, erase self-diagnosis result using CONSULT. After erasing self-diagnosis result, perform DTC P1701, P1709 reproduction procedure and check that malfunction is not detected. Refer to TM-144, "DTC Logic" (P1701), TM-148, "DTC Logic" (P1709).**

### 1. LOAD CALIBRATION DATA

1. Shift the selector lever to the "P" position.
2. Turn ignition switch ON.
3. Check that "P" is displayed on shift position indicator on combination meter.
   **NOTE:**
   Displayed approximately 1 – 2 seconds after the selector lever is moved to the "P" position.

Does the shift position indicator display "P"?

YES >> GO TO 3.
NO >> GO TO 2.

### 2. DETECT MALFUNCTIONING ITEM

Check the following items:

- Harness between the TCM and the ROM assembly inside the transaxle assembly is open or shorted.
- Disconnected, loose, bent, collapsed, or otherwise abnormal connector housing terminals

Is the inspection result normal?

YES >> GO TO 1.
NO >> Repair or replace the malfunctioning parts.

### 3. STORE CALIBRATION DATA

1. Turn ignition switch OFF and wait for 5 seconds.
2. Turn ignition switch ON.

Does the shift position indicator display "P" at the same time when turning ON the ignition switch?

YES >> WORK END
NO >> Check harness between battery and TCM harness connector terminal. Refer to TM-144, "Diagnosis Procedure".

# ADDITIONAL SERVICE WHEN REPLACING TRANSAXLE ASSEMBLY

## Description

INFOID:0000000009948909

When replacing the transaxle assembly, perform the following work.

ERASING, LOADING AND STORING OF CALIBRATION DATA
- The TCM acquires calibration data (individual characteristic value) of each solenoid that is stored in the ROM assembly (in the control valve). This enables the TCM to perform accurate control. For this reason, after the transaxle assembly/control valve is replaced, it is necessary to erase the calibration data previously stored in TCM, to load new calibration data, and to stored them.

ERASING OF CVT FLUID DEGRADATION LEVEL DATA
- TCM records the degradation level of the CVT fluid calculated from the vehicle driving status. Therefore, if the transaxle assembly/control valve is replaced, it is necessary to erase the CVT fluid degradation level data recorded by TCM.

## Procedure

INFOID:0000000009948910

**CAUTION:**
**Immediately after TCM is replaced or after transaxle assembly is replaced (after TCM initialization is complete), self-diagnosis result of “P1701”, “P1709” may be displayed. In this case, erase self-diagnosis result using CONSULT. After erasing self-diagnosis result, perform DTC P1701, P1709 reproduction procedure and check that malfunction is not detected. Refer to TM-144, "DTC Logic" (P1701), TM-148, "DTC Logic" (P1709).**

### 1. PREPARATION BEFORE WORK

**With CONSULT**
1. Start the engine.
   **CAUTION:**
   **Never drive the vehicle.**
2. Select “Data Monitor” in “TRANSMISSION”.
3. Select “ATFTEMP COUNT”.

Is “ATFTEMP COUNT” 47 [equivalent to 20°C (68°F)] or more?

YES >> GO TO 2.
NO >> 1. Warm up the transaxle assembly until “ATFTEMP COUNT” reaches “47” [equivalent to 20°C (68°F)] or more.
2. GO TO 2.

### 2. PERFORM TCM INITIALIZATION

**With CONSULT**
1. Turn ignition switch OFF.
2. Turn ignition switch ON.
   **CAUTION:**
   **Never start the engine.**
3. Select “Self Diagnostic Results” in “TRANSMISSION”.
4. Shift selector lever to “R” position.
5. Depress slightly the accelerator pedal (Pedal angle: 2.0/8) while depressing the brake pedal.
6. Select “Erase” with step 5.
7. Release brake pedal and accelerator pedal.
8. Turn ignition switch OFF while keeping the selector lever in “R” position.
9. Wait approximately 10 seconds.
10. Turn ignition switch ON while keeping the selector lever in “R” position.
11. Select “CALIB DATA” in “TRANSMISSION”.
12. Check that “CALIB DATA” value is as shown as in the following table.

| Item name | Display value |
|---|---|
| UNIT CLB ID 1 | 00 |
| UNIT CLB ID 2 | 00 |
| UNIT CLB ID 3 | 00 |

| Item name | Display value |
|---|---|
| UNIT CLB ID 4 | 00 |
| UNIT CLB ID 5 | 00 |
| UNIT CLB ID 6 | 00 |

Is “CALIB DATA” value it?

YES >> GO TO 3.
NO >> GO TO 1.

## 3. LOAD CALIBRATION DATA

1. Shift selector lever to “P” position.
2. Check that “P” is displayed on shift position indicator on combination meter.
   **NOTE:**
   It indicates approximately 1 – 2 seconds after shifting the selector lever to “P” position.

Does shift position indicator display “P”?

YES >> GO TO 5.
NO >> GO TO 4.

## 4. DETECT MALFUNCTIONING ITEM

Check the following items:
- Harness between the TCM and the ROM assembly inside the transaxle assembly is open or shorted.
- Disconnected, loose, bent, collapsed, or otherwise abnormal connector housing terminals
- Power supply and ground of TCM. (Refer to TM-144, "Diagnosis Procedure".)

Is the inspection result normal?

YES >> GO TO 1.
NO >> Repair or replace the malfunctioning parts.

## 5. STORE CALIBRATION DATA

1. Turn ignition switch OFF and wait for 5 seconds.
2. Turn ignition switch ON.

Does the shift position indicator display “P” at the same time when turning ON the ignition switch?

YES >> GO TO 6.
NO >> Check harness between battery and TCM harness connector terminal. Refer to TM-144, "Diagnosis Procedure".

## 6. ERASE CVT FLUID DEGRADATION LEVEL DATA

**With CONSULT**
1. Select “WORK SUPPORT” in “TRANSMISSION”.
2. Select “CONFORM CVTF DETERIORTN”.
3. Touch “Clear”.

>> WORK END

# SYSTEM DESCRIPTION

## CVT SYSTEM

### System Diagram

INFOID:0000000009948911

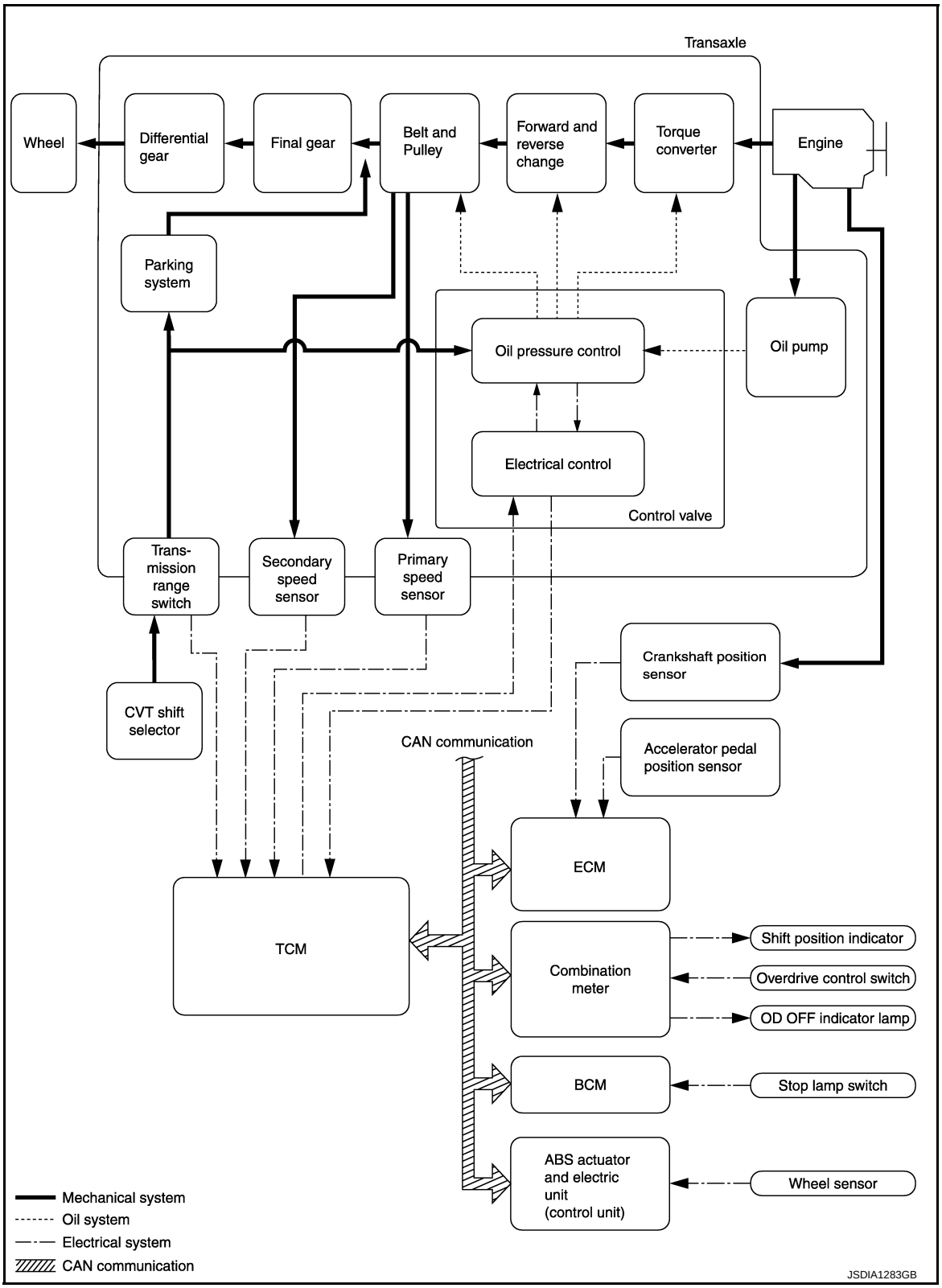

## Component Parts Location

INFOID:0000000009948912

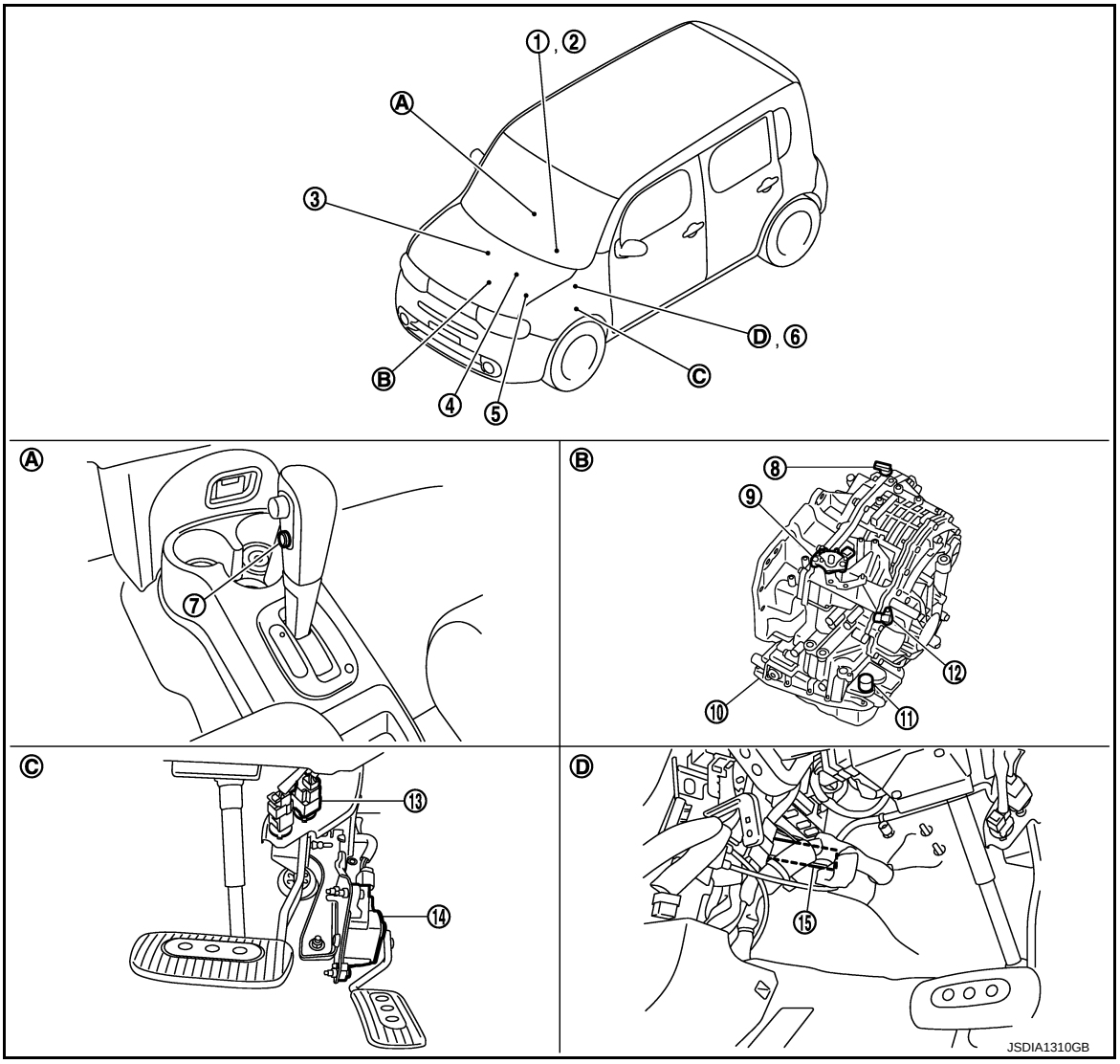


| | | |
|---|---|---|
| 1. Shift position indicator (On the combination meter) | 2. OD OFF indicator lamp (On the combination meter) | 3. Crankshaft position sensor |
| 4. ECM Refer to EC-36, "Component Parts Location" | 5. IPDM E/R Refer to PCS-5, "Component Parts Location" (With intelligent Key system), PCS-36, "Component Parts Location" (Without intelligent Key system) | 6. BCM Refer to BCS-10, "Component Parts Location" (With intelligent Key system), BCS-95, "Component Parts Location" (Without intelligent Key system) |
| 7. Overdrive control switch | 8. Secondary speed sensor | 9. Transmission range switch |
| 10. Control valve assembly* | 11. CVT unit connector | 12. Primary speed sensor |
| 13. Stop lamp switch | 14. Accelerator pedal position sensor | 15. TCM |
| A. Center console | B. Transaxle assembly | C. Accelerator pedal, upper |
| D. Brake pedal, left side | | |

**NOTE:**

The following components are included in control valve assembly.

- CVT fluid temperature sensor
- Torque converter clutch solenoid valve
- Lock-up select solenoid valve
- Line pressure solenoid valve

- Secondary pressure solenoid valve
- Secondary pressure sensor
- Step motor
- ROM assembly

*: Control valve assembly is included in transaxle assembly.

# MECHANICAL SYSTEM

## Cross-Sectional View

INFOID:0000000009948913

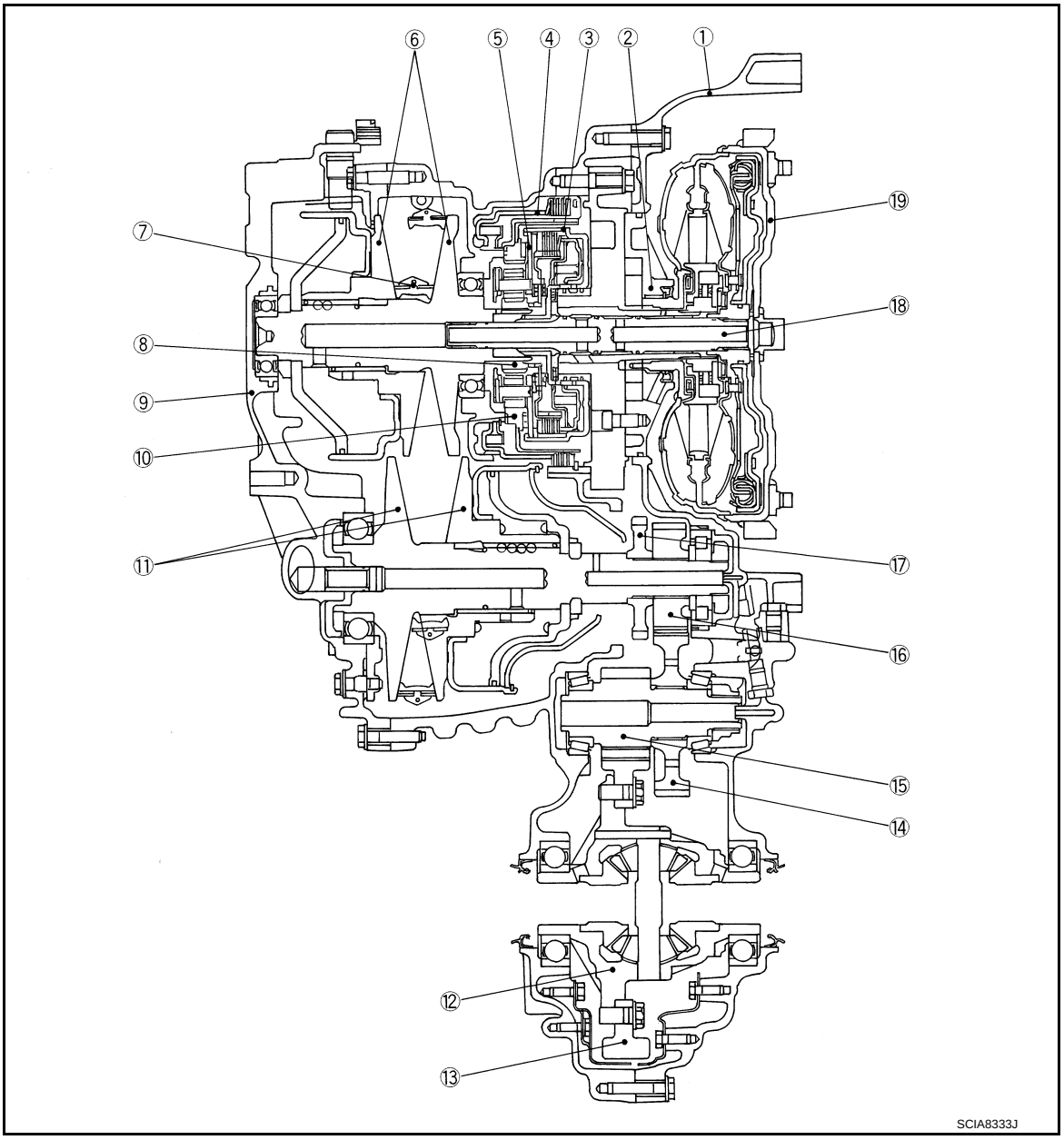


| | | |
|---|---|---|
| 1. Converter housing | 2. Oil pump | 3. Forward clutch |
| 4. Reverse brake | 5. Planetary carrier | 6. Primary pulley |
| 7. Steel belt | 8. Sun gear | 9. Side cover |
| 10. Internal gear | 11. Secondary pulley | 12. Differential case |
| 13. Final gear | 14. Idler gear | 15. Reduction gear |
| 16. Output gear | 17. Parking gear | 18. Input shaft |
| 19. Torque converter | | |

## System Diagram

INFOID:0000000009948914

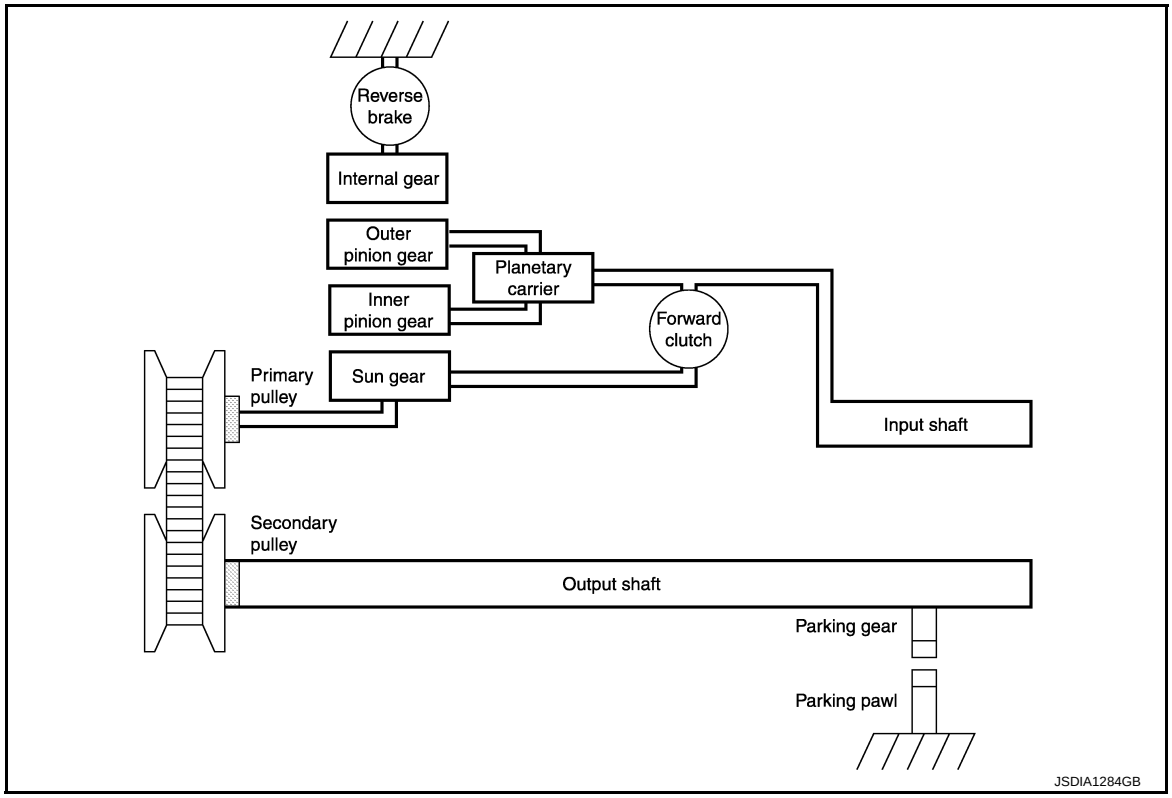


## System Description

INFOID:0000000009948915

Driving force of engine is transmitted to wheels via torque converter, planetary gear, belt & pulley, differential gear, and others. In addition, with mounting of parking mechanism, secondary pulley is mechanically fixed by shifting the selector lever to “P” position.

### Activation state according to each gear shifting

○: Activation

| Selector lever position | Secondary oil pressure sensor | Solenoid valve | | | | Step motor |
|---|---|---|---|---|---|---|
| | | Line pressure | Secondary pressure | Lock-up | Lock-up /select switching | |
| P | ○ | ○ | ○ | | ○ | |
| R | ○ | ○ | ○ | | ○ | ○ |
| N | ○ | ○ | ○ | | ○ | ○ |
| D (Low) | ○ | ○ | ○ | ○ | | ○ |
| D (High) | ○ | ○ | ○ | ○ | | ○ |
| D (Lock-up) | ○ | ○ | ○ | ○ | | ○ |
| L | ○ | ○ | ○ | ○ | | ○ |

### Power transmission of each position

“P” position

- Driving force from input shaft is not transmitted to primary pulley because of idling caused by poor engagement of forward clutch and reverse brake.
- Since the parking pole interlocked with the selector lever becomes into engagement with the parking gear integral with the output shaft to mechanically fix the output shaft, torque from wheel is not transmitted to secondary pulley.

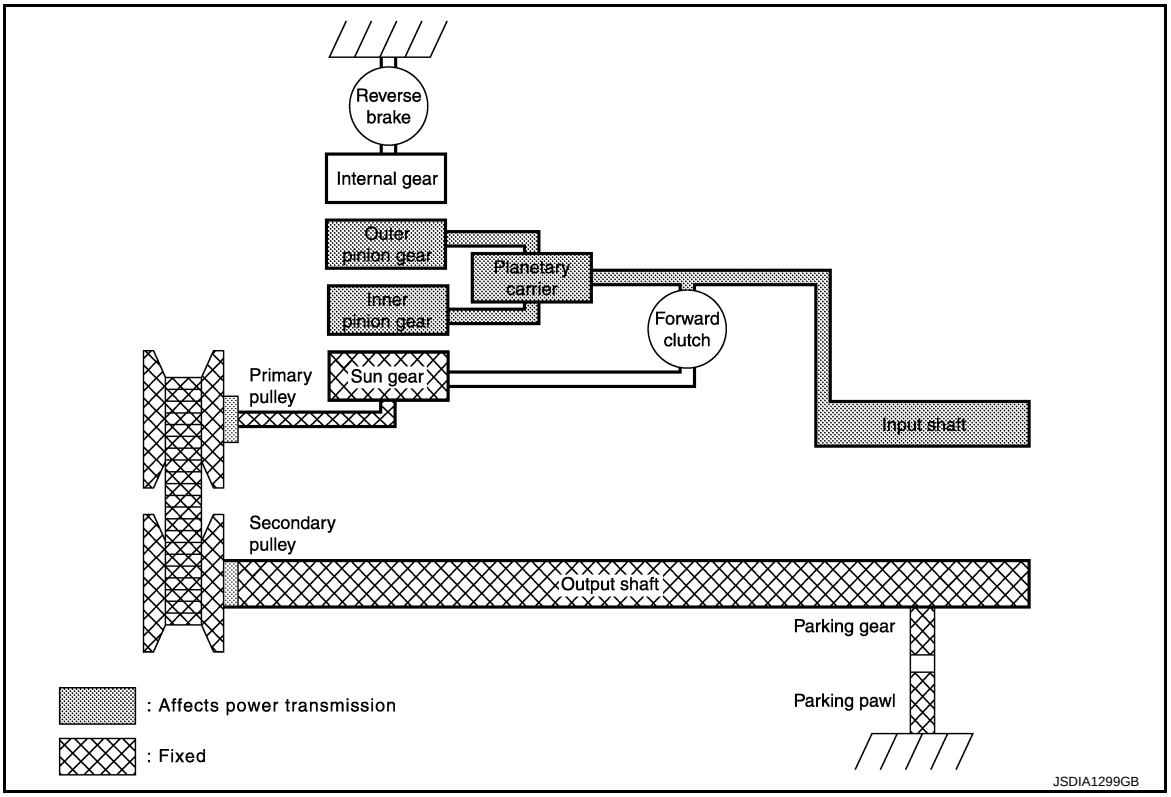


Planet gear

| Description | Sun gear | Planetary carrier | Internal gear |
|---|---|---|---|
| Condition | Fixed | Input | — |
| Rotating direction | — | Idle | In the positive direction |

“R” position

- Driving force from input shaft rotates sun gear in opposite direction of input shaft rotation because reverse brake is engaged and internal gear is fixed.
- Therefore primary pulley rotates in opposite direction of input shaft rotation and driving force output is in opposite direction rotation.

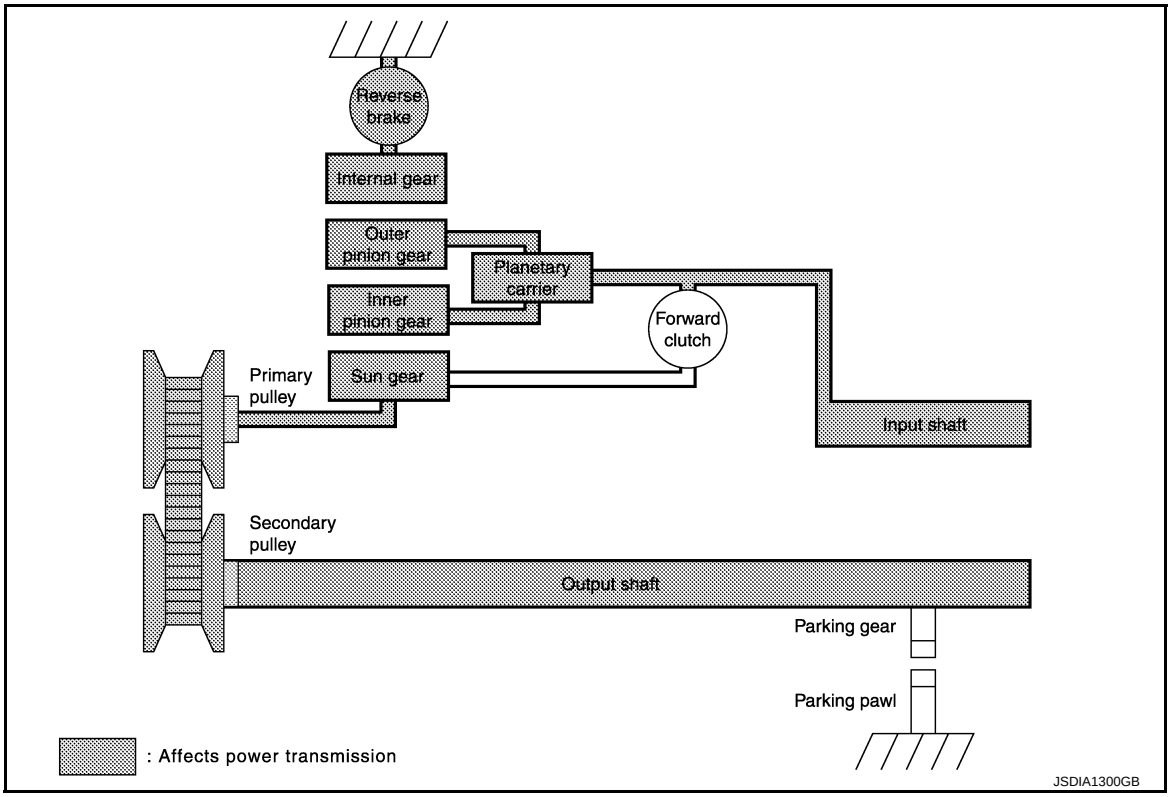


Planet gear

| Description | Sun gear | Planetary carrier | Internal gear |
|---|---|---|---|
| Condition | Output | Input | Fixed |
| Rotating direction | In the positive direction | In the positive direction | — |

“N” position

- Driving force from input shaft is not transmitted to primary pulley because of idling caused by poor engagement of forward clutch and reverse brake.
- Torque from wheel is not transmitted to input shaft because of idling of planetary carrier caused by poor engagement of forward clutch and reverse brake.

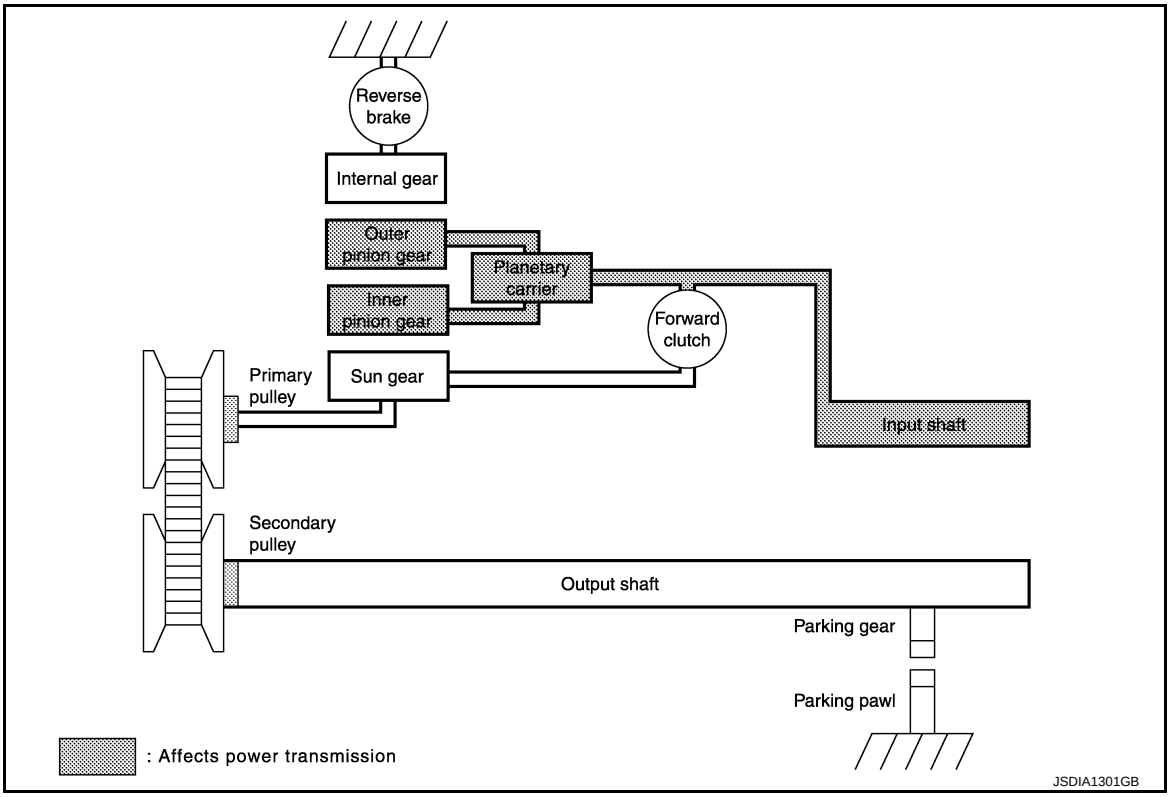


Planet gear

| Description | Sun gear | Planetary carrier | Internal gear |
|---|---|---|---|
| Condition | — | Input | — |
| Rotating direction | Stopped | Idle | In the positive direction |

“D” and “L” positions

- Since the Forward clutch is engaged, driving force from Input shaft rotates Sun gear in the positive direction via Forward clutch.
- Therefore primary pulley rotates in the positive direction, and driving force is outputted in the forward direction.

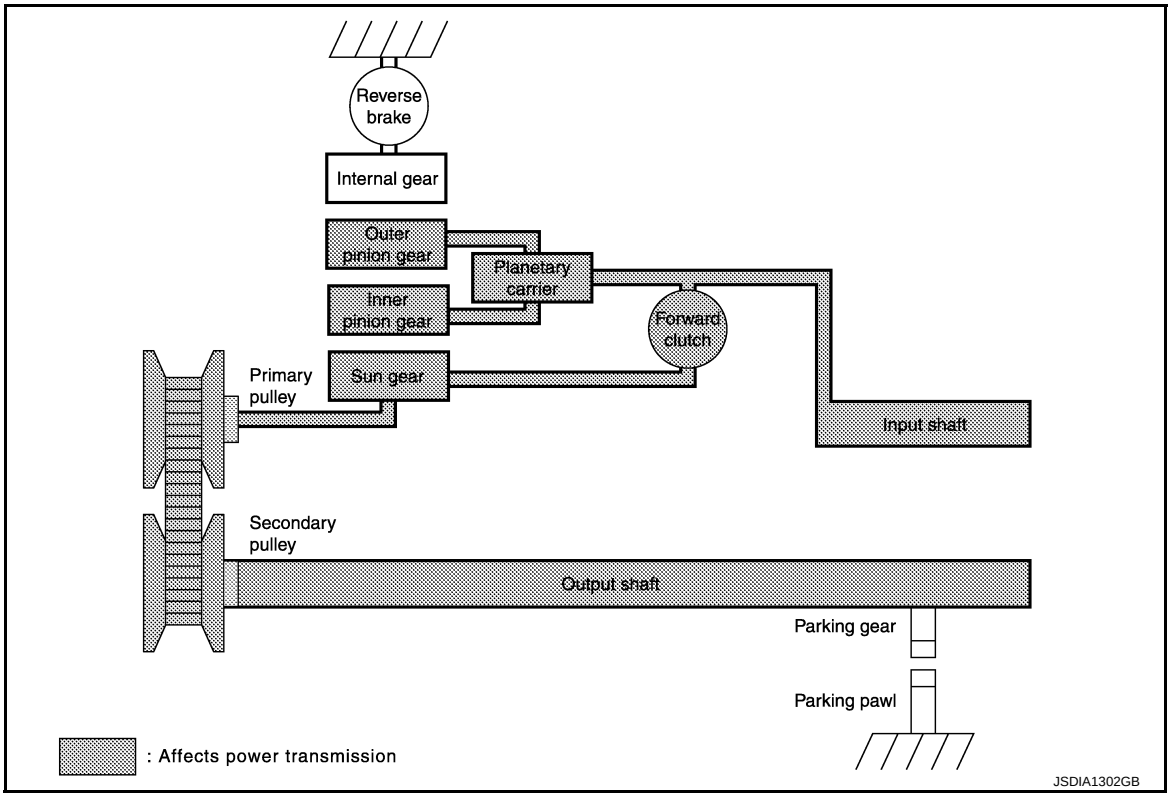


Planet gear

| Description | Sun gear | Planetary carrier | Internal gear |
|---|---|---|---|
| Condition | Input/Output | Input | — |
| Rotating direction | In the positive direction | In the positive direction | Idle |

## Component Parts Location

INFOID:0000000009948916

Refer to TM-73, "Cross-Sectional View".

## Component Description

INFOID:0000000009948917

| Item | Function |
|---|---|
| Torque converter | The torque converter is the device that increases the engine torque as well as the conventional CVT and transmits it to the transaxle. |
| Oil pump | This is a trochoid type oil pump directly driven by the engine. Discharged oil from oil pump is conveyed to control valve to be used for operating oil for primary and secondary pulleys, clutch, and for lubricant for each part. |
| Forward clutch | The forward clutch is wet and multiple plate type clutch that consists of clutch drum, piston, drive plate, and driven plate. It is a clutch to move the vehicle forward by activating piston hydraulically, engaging plates, and directly connecting sun gear and input shaft. |
| Reverse brake | The reverse brake is a wet and multiple plate type brake that consists of transaxle case, piston, drive plate, and driven plate. It is a brake to move the vehicle in reverse by activating piston hydraulically, engaging plates, and fixing internal gear. |
| Internal gear | The internal gear is directly connected to reverse brake drum. It is a gear that moves the outer edge of outer pinion gear of planetary carrier. It performs switching of forwards, reverse and others by fixing or releasing internal gear. |
| Planetary carrier | The planetary carrier consists of carrier, inner pinion gear, outer pinion gear, and pinion shaft. It transmits traction force to move the vehicle in reverse when internal gear is fixed. |
| Sun gear | Sun gear is a set part of planetary carrier and internal gear. It transmits transmitted traction force to primary fix pulley (FIX). It rotates in same or opposite direction according to activation of either forward clutch or reverse brake. |

| Item | Function |
|---|---|
| Input shaft | The input shaft is directly connected to forward clutch drum and transmits traction force from torque converter. In shaft center, there are holes for hydraulic distribution to primary pulley and hydraulic distribution for lock-up ON/OFF. |
| Primary pulley | It is composed of a pair of pulleys (the groove width is changed freely in the axial direction) and the steel belt (the steel star wheels are placed continuously and the belt is guided with the multilayer steel rings on both sides). The groove width changes according to wrapping radius of steel belt and pulley from low status to overdrive status continuously with non-step. It is controlled with the oil pressures of primary pulley and secondary pulley. |
| Secondary pulley | |
| Steel belt | |
| Manual shaft | The parking rod rotates the parking pole and the parking pole engages with the parking gear when the manual shaft is in “P” position. As a result the parking gear and the output axis are fixed. |
| Parking rod | |
| Parking pawl | |
| Parking gear | |
| Output gear | Reduction gear consists of primary deceleration (output gear and idler gear in pair) and secondary deceleration (reduction gear and final gear in pair). Each of them uses a helical gear. |
| Idler gear | |
| Reduction gear | |
| Final gear | |
| Differential | |

# HYDRAULIC CONTROL SYSTEM

## System Diagram

INFOID:0000000009948918

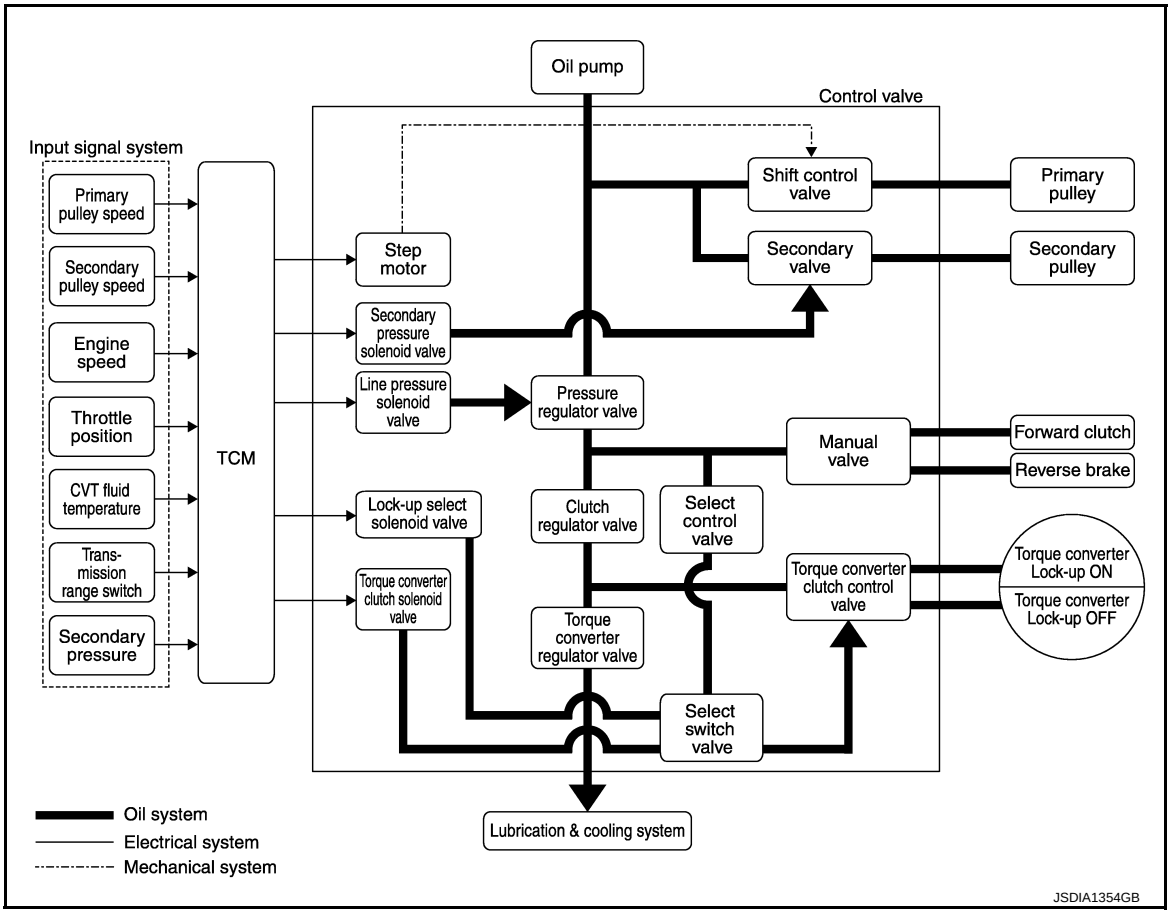


## System Description

INFOID:0000000009948919

Hydraulic control mechanism consists of trochoid type oil pump directly driven by the engine, hydraulic control valve controlling line pressure and gear shifting, and input signals.

### LINE PRESSURE AND SECONDARY PRESSURE CONTROL

When an input torque signal corresponding to engine driving force is transmitted from ECM to TCM, TCM controls line pressure solenoid valve and secondary pressure solenoid valve to adjust to a correct oil pressure.

#### Normal Control

Optimize the line pressure and secondary pressure, depending on driving conditions, on the basis of the throttle position, the engine speed, the primary pulley (input) revolution speed, the secondary pulley (output) revolution speed, the brake signal, the transmission range switch signal, the lock-up signal, the voltage, the target gear ratio, the fluid temperature, and the fluid pressure.

#### Feedback Control

For the normal fluid control and the select fluid control, secondary pressure is detected for feedback control by using a secondary pressure sensor to set a high-precision secondary pressure.

## Component Parts Location

INFOID:0000000009948920

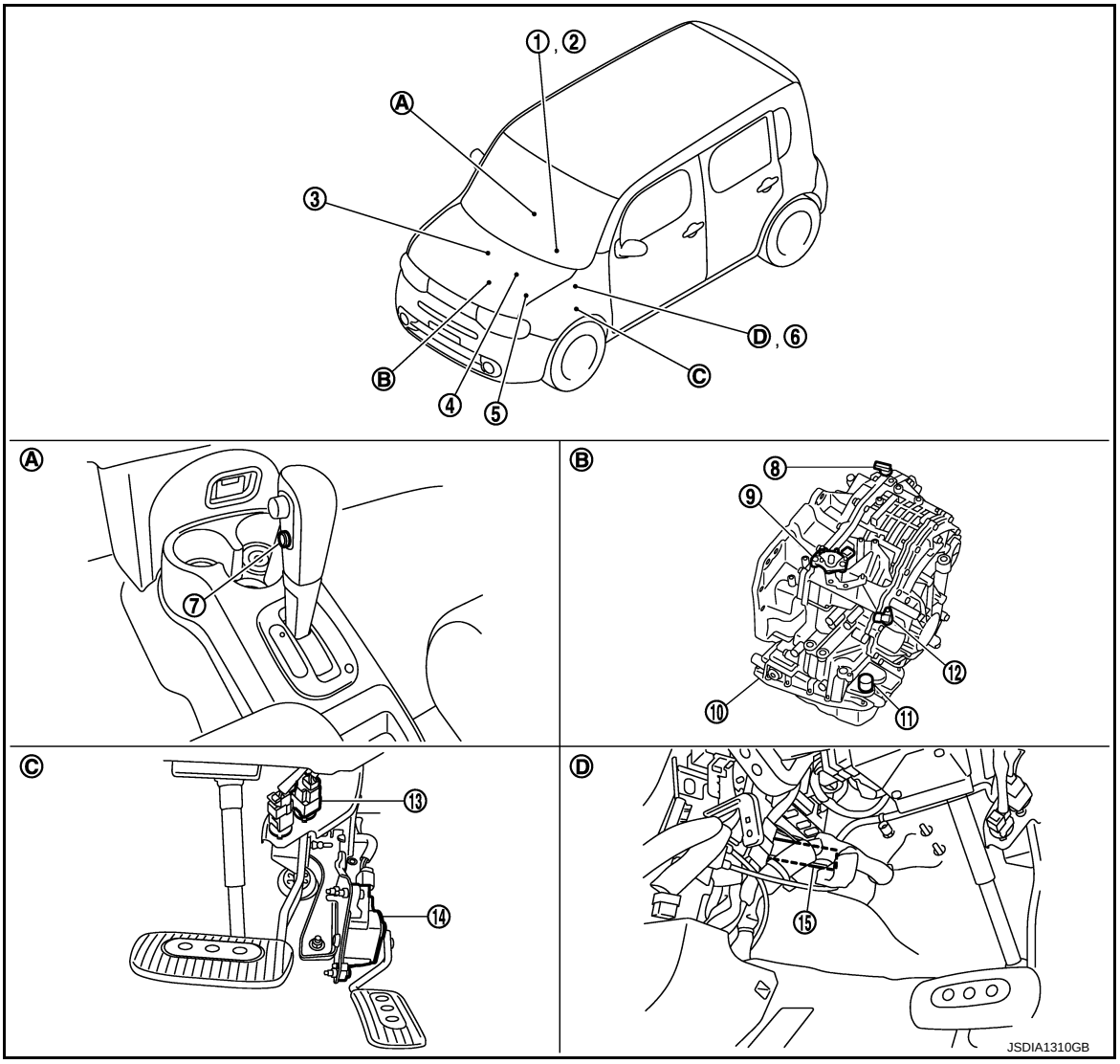


| | | |
|---|---|---|
| 1. Shift position indicator (On the combination meter) | 2. OD OFF indicator lamp (On the combination meter) | 3. Crankshaft position sensor |
| 4. ECM Refer to EC-36, "Component Parts Location" | 5. IPDM E/R Refer to PCS-5, "Component Parts Location" (With intelligent Key system), PCS-36, "Component Parts Location" (Without intelligent Key system) | 6. BCM Refer to BCS-10, "Component Parts Location" (With intelligent Key system), BCS-95, "Component Parts Location" (Without intelligent Key system) |
| 7. Overdrive control switch | 8. Secondary speed sensor | 9. Transmission range switch |
| 10. Control valve assembly* | 11. CVT unit connector | 12. Primary speed sensor |
| 13. Stop lamp switch | 14. Accelerator pedal position sensor | 15. TCM |
| A. Center console | B. Transaxle assembly | C. Accelerator pedal, upper |
| D. Brake pedal, left side | | |

**NOTE:**

The following components are included in control valve assembly.

- CVT fluid temperature sensor
- Torque converter clutch solenoid valve
- Lock-up select solenoid valve
- Line pressure solenoid valve

- Secondary pressure solenoid valve
- Secondary pressure sensor
- Step motor
- ROM assembly

*: Control valve assembly is included in transaxle assembly.

## Component Description

INFOID:0000000009948921

| Name | Function |
|---|---|
| Torque converter regulator valve | Optimizes the supply pressure for the torque converter depending on driving conditions. |
| Pressure regulator valve | Optimizes the discharge pressure from the oil pump depending on driving conditions. |
| TCC control valve | • Activates or deactivates the lock-up.<br>• Locks-up smoothly by opening lock-up operation excessively. |
| Shift control valve | Controls inflow/outflow of line pressure from the primary pulley depending on the stroke difference between the stepping motor and the primary pulley. |
| Secondary valve | Controls the line pressure from the secondary pulley depending on operating conditions. |
| Clutch regulator valve | Adjusts the clutch operating pressure depending on operating conditions. |
| Manual valve | Transmits the clutch operating pressure to each circuit in accordance with the selected position. |
| Select control valve | Engages forward clutch, reverse brake smoothly depending on select operation. |
| Select switch valve | The select switch valve enables to select engagement/disengagement of lock-up clutch and that of forward clutch and reverse clutch. |
| TCC solenoid valve | TM-123, "Description" |
| Secondary pressure solenoid valve | TM-135, "Description" |
| Line pressure solenoid valve | TM-129, "Description" |
| Step motor | TM-157, "Description" |
| Lock-up select solenoid valve | TM-154, "Description" |
| Primary speed sensor | TM-116, "Description" |
| Secondary speed sensor | TM-119, "Description" |
| Transmission range switch | TM-109, "Description" |
| Primary pulley | TM-78, "Component Description" |
| Secondary pulley | |
| Forward clutch | |
| Torque converter | |
| TCM | Judges the vehicle driving status according to the signal from each sensor and controls the non-step transmission mechanism properly. |
| Accelerator pedal position sensor | TM-147, "Description" |

# CONTROL SYSTEM

## System Diagram

INFOID:0000000009948922

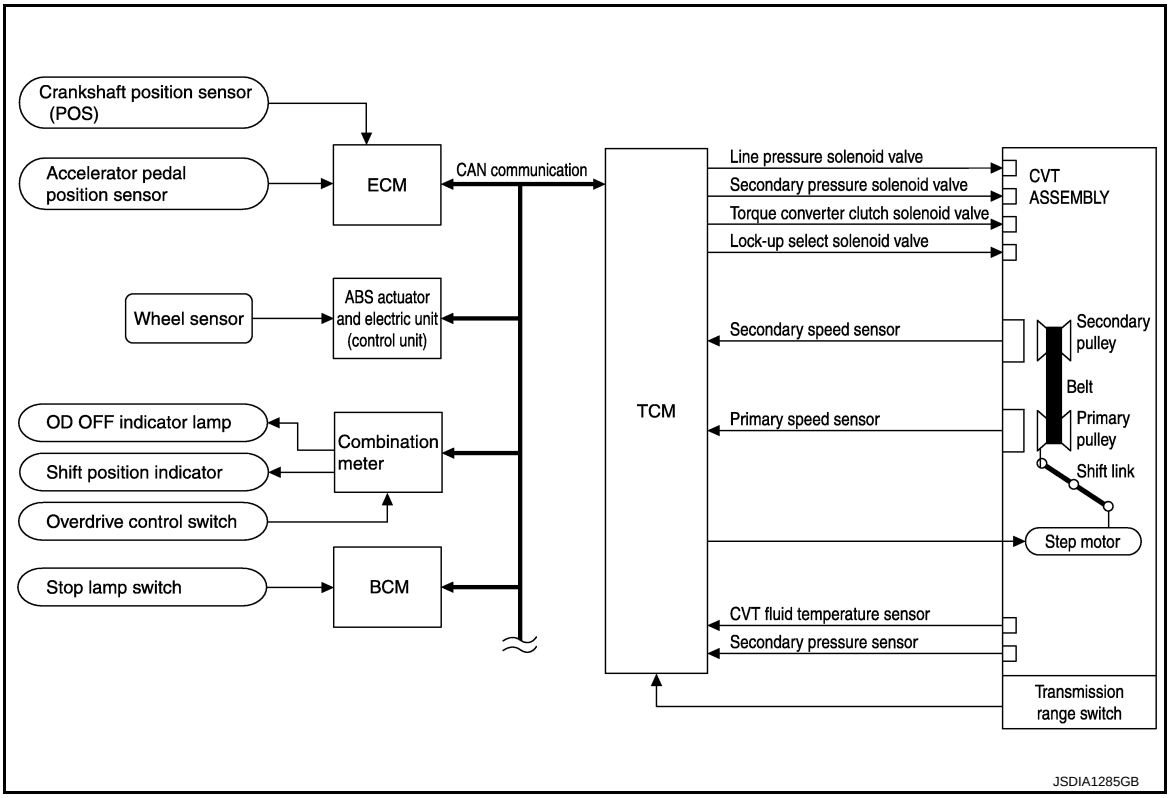


## System Description

INFOID:0000000009948923

The CVT senses vehicle operating conditions through various sensors. It always controls the optimum shift position and reduces shifting and lock-up shocks.

### TCM FUNCTION

The function of the TCM is to:

- Receive input signals sent from various switches and sensors.
- Determine required line pressure, shifting point, and lock-up operation.
- Send required output signals to the step motor and the respective solenoids.

| SENSORS (or SIGNALS) | | TCM | | ACTUATORS |
|---|---|---|---|---|
| Transmission range switch<br>CVT fluid temperature sensor<br>Secondary pressure sensor<br>Primary speed sensor<br>Secondary speed sensor<br>Engine speed signal<br>Accelerator pedal position signal<br>Closed throttle position signal<br>Stop lamp switch signal<br>Overdrive control switch signal<br>Vehicle speed signal | ⇒ | Shift control<br>Line pressure control<br>Primary pressure control<br>Secondary pressure control<br>Lock-up control<br>Engine brake control<br>Vehicle speed control<br>Fail-safe control<br>Self-diagnosis<br>CONSULT communication line<br>Duet-EA control<br>CAN system<br>On board diagnosis | ⇒ | Line pressure solenoid valve<br>Secondary pressure solenoid valve<br>Torque converter clutch solenoid valve<br>Lock-up select solenoid valve<br>Step motor<br>Shift position indicator<br>OD OFF indicator lamp |

INPUT/OUTPUT SIGNAL OF TCM

| Control item | | Fluid pressure control | Select control | Shift control | Lock-up control | CAN communication control | Fail-safe function*2 |
|---|---|---|---|---|---|---|---|
| Input | Transmission range switch | X | X | X | X | X | X |
| | CVT fluid temperature sensor | X | X | X | X | | X |
| | Secondary pressure sensor | X | | | | | X |
| | Primary speed sensor | X | X | X | X | | X |
| | Secondary speed sensor | X | X | X | X | | X |
| | Engine speed signal*1 | X | X | X | X | X | X |
| | Accelerator pedal position signal *1 | X | X | X | X | X | X |
| | Closed throttle position signal*1 | X | X | | X | X | |
| | Stop lamp switch signal*1 | X | X | | X | X | |
| | Overdrive control switch signal*1 | | X | X | X | X | |
| | TCM power supply voltage signal | X | X | X | X | X | X |
| Output | Line pressure solenoid valve | X | | X | | | X |
| | Secondary pressure solenoid valve | X | | | | | X |
| | TCC solenoid valve | | | X | X | | X |
| | Lock-up select solenoid valve | | | X | X | | X |
| | Step motor | | X | | | | X |

*1: Input via CAN communications.

*2: If these input and output signals are different, the TCM triggers the fail-safe function.

## Component Parts Location

INFOID:0000000009948924

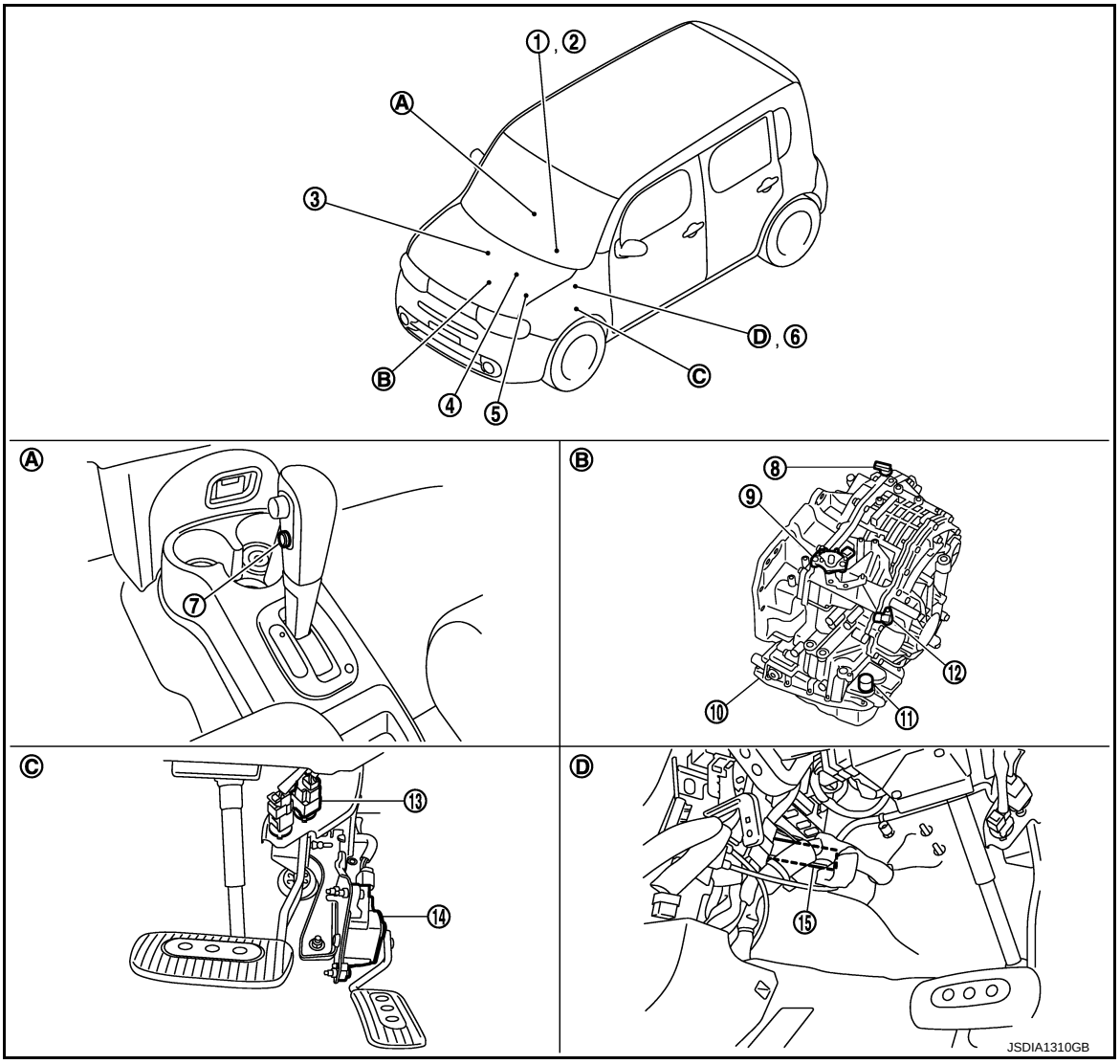


| | | |
|---|---|---|
| 1. Shift position indicator (On the combination meter) | 2. OD OFF indicator lamp (On the combination meter) | 3. Crankshaft position sensor |
| 4. ECM Refer to EC-36, "Component Parts Location" | 5. IPDM E/R Refer to PCS-5, "Component Parts Location" (With intelligent Key system), PCS-36, "Component Parts Location" (Without intelligent Key system) | 6. BCM Refer to BCS-10, "Component Parts Location" (With intelligent Key system), BCS-95, "Component Parts Location" (Without intelligent Key system) |
| 7. Overdrive control switch | 8. Secondary speed sensor | 9. Transmission range switch |
| 10. Control valve assembly* | 11. CVT unit connector | 12. Primary speed sensor |
| 13. Stop lamp switch | 14. Accelerator pedal position sensor | 15. TCM |
| A. Center console | B. Transaxle assembly | C. Accelerator pedal, upper |
| D. Brake pedal, left side | | |

**NOTE:**

The following components are included in control valve assembly.

- CVT fluid temperature sensor
- Torque converter clutch solenoid valve
- Lock-up select solenoid valve
- Line pressure solenoid valve

- Secondary pressure solenoid valve
- Secondary pressure sensor
- Step motor
- ROM assembly

*: Control valve assembly is included in transaxle assembly.

## Component Description

INFOID:0000000009948925

| Name | Function |
|---|---|
| Transmission range switch | TM-109, "Description" |
| CVT fluid temperature sensor | TM-112, "Description" |
| Secondary pressure sensor | TM-137, "Description" |
| Primary speed sensor | TM-116, "Description" |
| Secondary speed sensor | TM-119, "Description" |
| Line pressure solenoid valve | TM-129, "Description" |
| Secondary pressure solenoid valve | TM-135, "Description" |
| TCC solenoid valve | TM-123, "Description" |
| Lock-up select solenoid valve | TM-154, "Description" |
| Step motor | TM-157, "Description" |
| TCM | TM-82, "Component Description" |
| Accelerator pedal position sensor | TM-147, "Description" |
| Stop lamp switch | TM-106, "Description" |
| Overdrive control switch | TM-162, "Description" |

# LOCK-UP AND SELECT CONTROL SYSTEM

## System Diagram

INFOID:0000000009948926

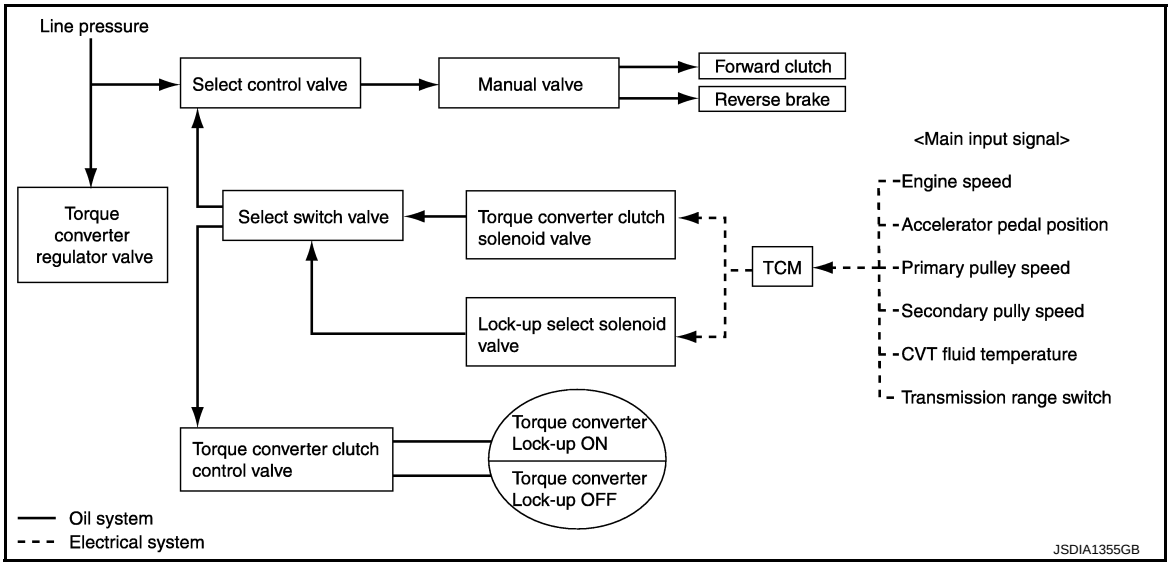


## System Description

INFOID:0000000009948927

- The torque converter clutch piston in the torque converter is engaged to eliminate torque converter slip to increase power transmission efficiency.
- The torque converter clutch control valve operation is controlled by the torque converter clutch solenoid valve, which is controlled by a signal from TCM. The torque converter clutch control valve engages or releases the torque converter clutch piston.
- When shifting between “N” (“P”) ⇒“D” (“R”), torque converter clutch solenoid valve controls engagement power of forward clutch and reverse brake.
- The lock-up applied gear range was expanded by locking up the torque converter at a lower vehicle speed than AT models.
- Lock-up is prohibited when CVT fluid temperature is low.

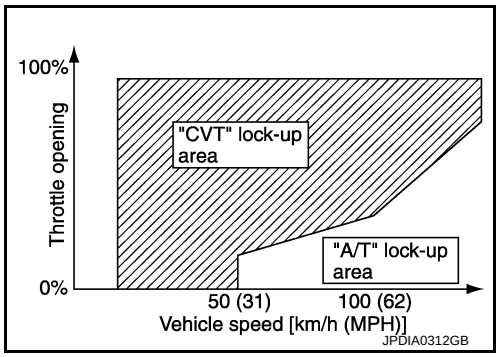


### TORQUE CONVERTER CLUTCH AND SELECT CONTROL VALVE CONTROL

Lock-up Released

In the lock-up released state, the torque converter clutch control valve is set into the unlocked state by the torque converter clutch solenoid valve and the lock-up apply pressure is drained.
In this way, the torque converter clutch piston is not coupled.

Lock-up Applied

In the lock-up applied state, the torque converter clutch control valve is set into the locked state by the torque converter clutch solenoid valve and lock-up apply pressure is generated.
In this way, the torque converter clutch piston is pressed and coupled.

Select Control

When shifting between “N” (“P”) ⇒“D” (“R”), optimize the operating pressure on the basis of the throttle position, the engine speed, and the secondary pulley (output) revolution speed to lessen the shift shock.

## Component Parts Location

INFOID:0000000009948928

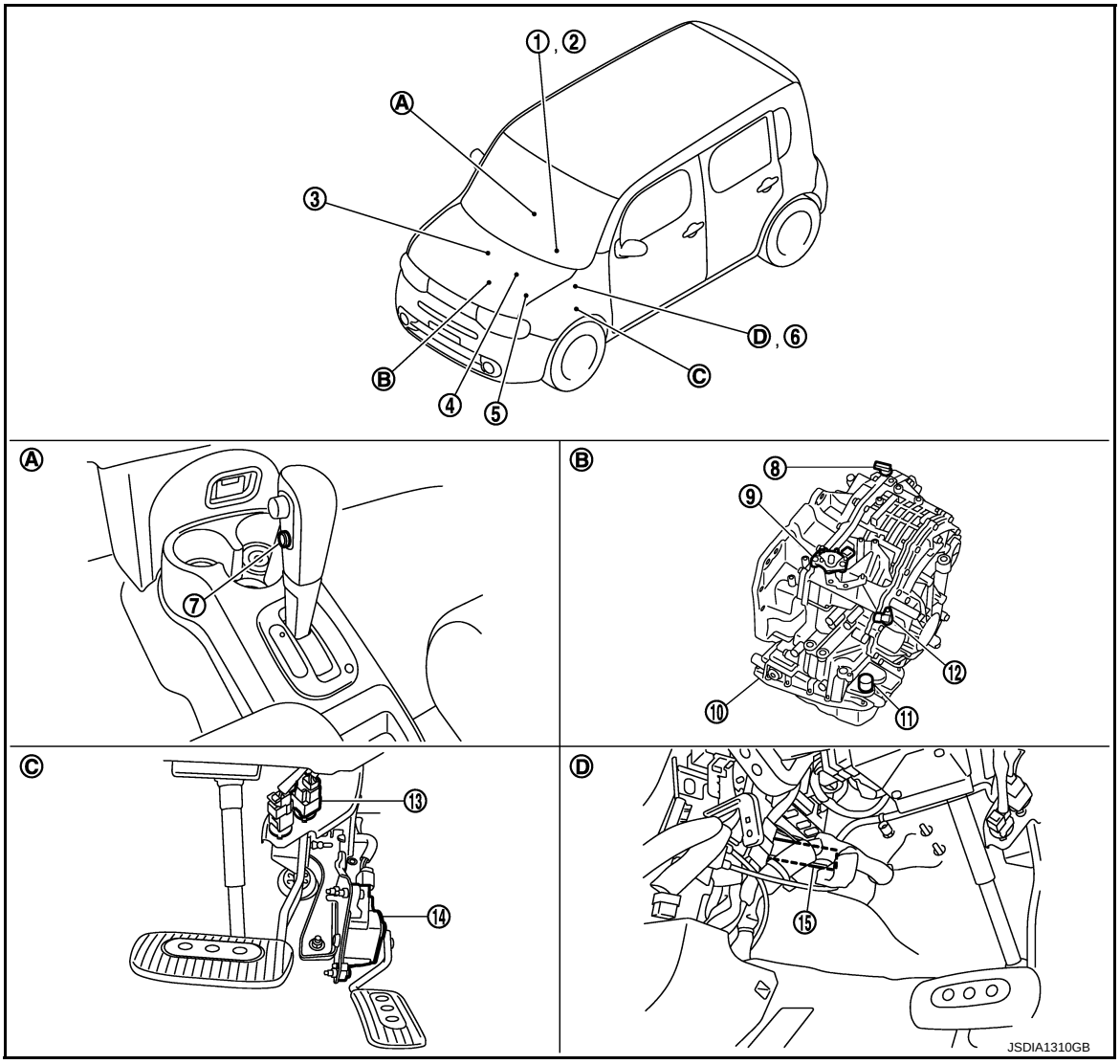


| | | |
|---|---|---|
| 1. Shift position indicator (On the combination meter) | 2. OD OFF indicator lamp (On the combination meter) | 3. Crankshaft position sensor |
| 4. ECM Refer to EC-36, "Component Parts Location" | 5. IPDM E/R Refer to PCS-5, "Component Parts Location" (With intelligent Key system), PCS-36, "Component Parts Location" (Without intelligent Key system) | 6. BCM Refer to BCS-10, "Component Parts Location" (With intelligent Key system), BCS-95, "Component Parts Location" (Without intelligent Key system) |
| 7. Overdrive control switch | 8. Secondary speed sensor | 9. Transmission range switch |
| 10. Control valve assembly* | 11. CVT unit connector | 12. Primary speed sensor |
| 13. Stop lamp switch | 14. Accelerator pedal position sensor | 15. TCM |
| A. Center console | B. Transaxle assembly | C. Accelerator pedal, upper |
| D. Brake pedal, left side | | |

**NOTE:**

The following components are included in control valve assembly.

- CVT fluid temperature sensor
- Torque converter clutch solenoid valve
- Lock-up select solenoid valve
- Line pressure solenoid valve

- Secondary pressure solenoid valve
- Secondary pressure sensor
- Step motor
- ROM assembly

*: Control valve assembly is included in transaxle assembly.

## Component Description

INFOID:0000000009948929

| Name | Function |
|---|---|
| Transmission range switch | TM-109, "Description" |
| CVT fluid temperature sensor | TM-112, "Description" |
| Primary speed sensor | TM-116, "Description" |
| Secondary speed sensor | TM-119, "Description" |
| TCC solenoid valve | TM-123, "Description" |
| Lock-up select solenoid valve | TM-154, "Description" |
| Select switch valve | TM-82, "Component Description" |
| TCC control valve | |
| Torque converter regulator valve | |
| Select control valve | |
| Manual valve | |
| Forward clutch | TM-78, "Component Description" |
| Reverse brake | |
| Torque converter | |
| TCM | TM-82, "Component Description" |
| Accelerator pedal position sensor | TM-147, "Description" |

# SHIFT CONTROL SYSTEM

## System Diagram

INFOID:0000000009948930

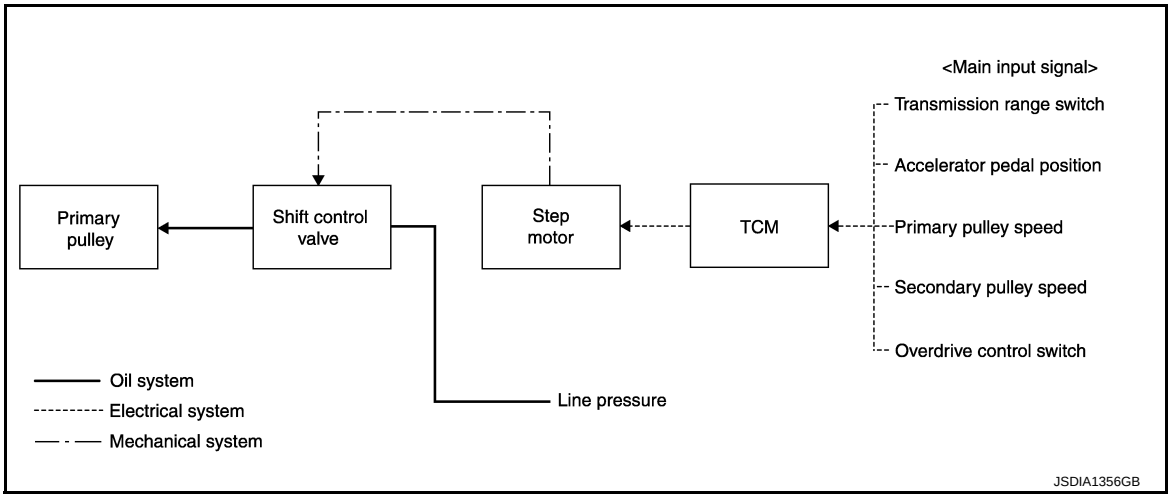


**NOTE:**
The gear ratio is set for each position separately.

## System Description

INFOID:0000000009948931

In order to select the gear ratio that can obtain the driving force in accordance with driver's intention and the vehicle condition, TCM monitors the driving conditions, such as the vehicle speed and the throttle position and selects the optimum gear ratio, and determines the gear change steps to the gear ratio. Then TCM sends the command to the step motor, controls the inflow/outflow of line pressure from the primary pulley to determine the position of the moving-pulley and controls the gear ratio.

### “D” POSITION

Shifting over all the ranges of gear ratios from the lowest to the highest.

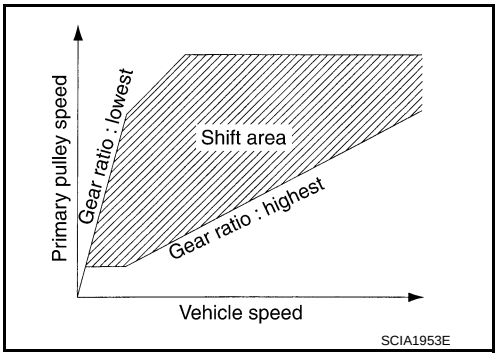


### OVERDRIVE OFF CONDITION

Use this position for the improved engine braking.

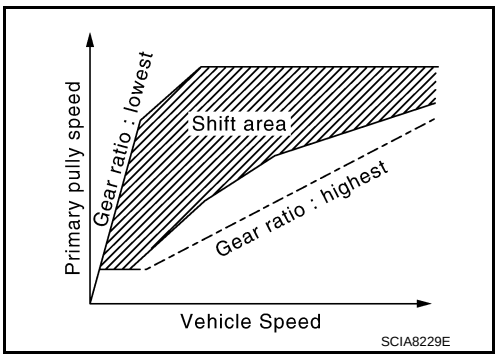


### “L” POSITION

By limiting gear range to the lowest position, the strong driving force and the engine brake can be secured.

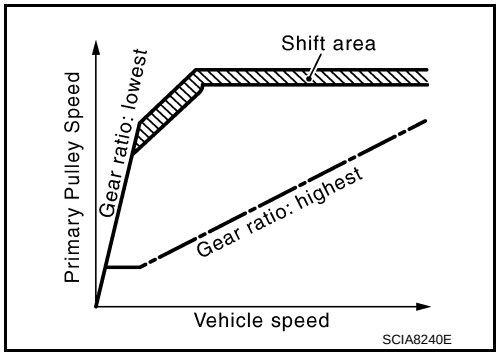


DOWNHILL ENGINE BRAKE CONTROL (AUTO ENGINE BRAKE CONTROL)

When a downhill slope is detected with the accelerator pedal released, the engine brake will be strengthened up by downshifting so as not to accelerate the vehicle more than necessary.

ACCELERATION CONTROL

According to vehicle speed and a change of accelerator pedal angle, driver's request for acceleration and driving scene are judged. This function assists improvement in the acceleration feeling by making the engine speed proportionate to the vehicle speed. And a shift map that can gain a larger driving force is available for compatibility of mileage with driveability.

## Component Parts Location

INFOID:0000000009948932

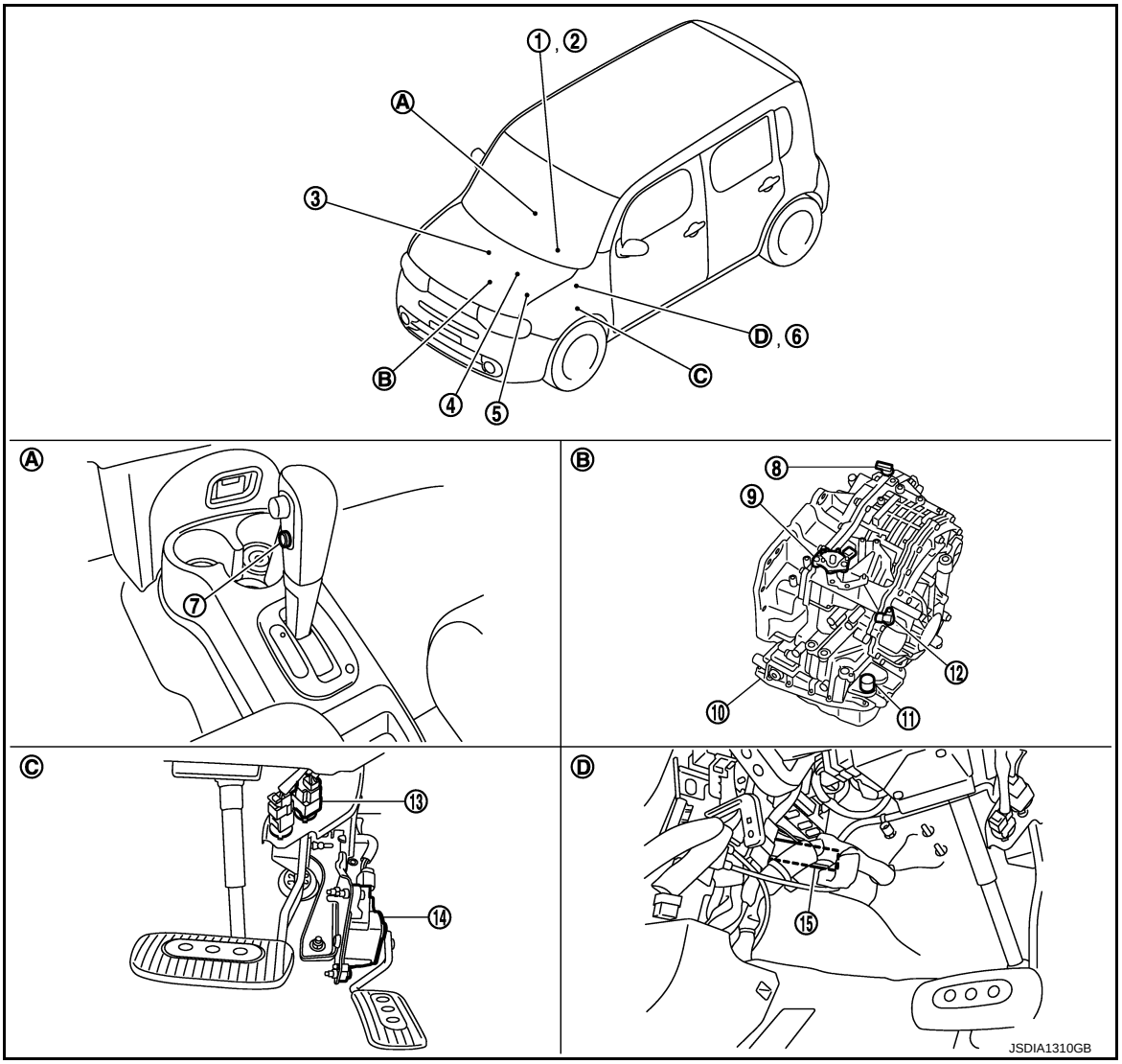

1. Shift position indicator (On the combination meter)
2. OD OFF indicator lamp (On the combination meter)
3. Crankshaft position sensor
4. ECM Refer to EC-36, "Component Parts Location"
5. IPDM E/R Refer to PCS-5, "Component Parts Location" (With intelligent Key system), PCS-36, "Component Parts Location" (Without intelligent Key system)
6. BCM Refer to BCS-10, "Component Parts Location" (With intelligent Key system), BCS-95, "Component Parts Location" (Without intelligent Key system)
7. Overdrive control switch
8. Secondary speed sensor
9. Transmission range switch
10. Control valve assembly*
11. CVT unit connector
12. Primary speed sensor
13. Stop lamp switch
14. Accelerator pedal position sensor
15. TCM

A. Center console
B. Transaxle assembly
C. Accelerator pedal, upper
D. Brake pedal, left side

**NOTE:**

The following components are included in control valve assembly.

- CVT fluid temperature sensor
- Torque converter clutch solenoid valve
- Lock-up select solenoid valve
- Line pressure solenoid valve
- Secondary pressure solenoid valve
- Secondary pressure sensor
- Step motor
- ROM assembly

*: Control valve assembly is included in transaxle assembly.

## Component Description

INFOID:0000000009948933

| Item | Function |
|---|---|
| Transmission range switch | TM-109, "Description" |
| Primary speed sensor | TM-116, "Description" |
| Secondary speed sensor | TM-119, "Description" |
| Step motor | TM-157, "Description" |
| Shift control valve | TM-82, "Component Description" |
| Primary pulley | TM-78, "Component Description" |
| Secondary pulley | |
| TCM | TM-82, "Component Description" |
| Accelerator pedal position sensor | TM-147, "Description" |
| Overdrive control switch | TM-162, "Description" |

# SHIFT LOCK SYSTEM

## WITH INTELLIGENT KEY SYSTEM

### WITH INTELLIGENT KEY SYSTEM : System Description

INFOID:0000000009948934

The shift lever cannot be shifted from the “P” position unless the brake pedal is depressed while the ignition switch is set to ON. The shift lock is unlocked by turning the shift lock solenoid ON when the ignition switch is set to ON, the park position switch is turned ON (selector lever is in “P” position), and the stop lamp switch is turned ON (brake pedal is depressed) as shown in the operation chart in the figure. Therefore, the shift lock solenoid receives no ON signal and the shift lock remains locked if all of the above conditions are not fulfilled. (However, selector operation is allowed if the shift lock release button is pressed.)

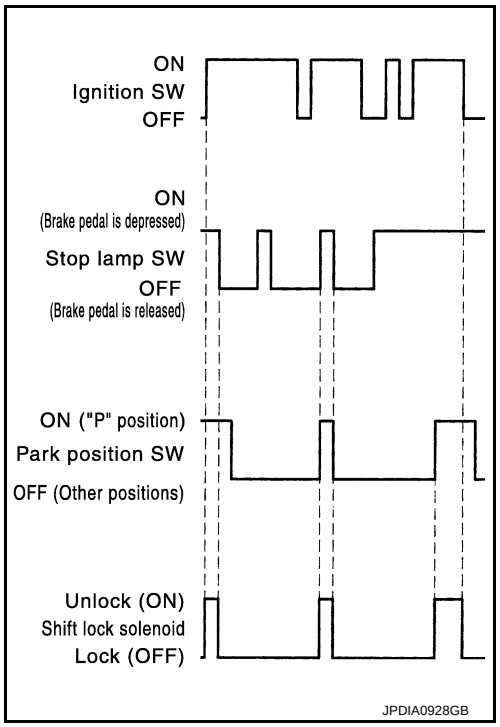


### SHIFT LOCK OPERATION AT “P” POSITION

When Brake Pedal Is Not Depressed (No Selector Operation Allowed)

The shift lock solenoid (A) is turned OFF (not energized) and the solenoid rod (B) is extended with the spring when the brake pedal is not depressed (no selector operation allowed) with the ignition switch ON.

The connecting lock lever (C) is located at the position shown in the figure when the solenoid rod is extended. It prevents the movement of the pull rod (D). For these reasons, the selector lever cannot be shifted from the “P” position.

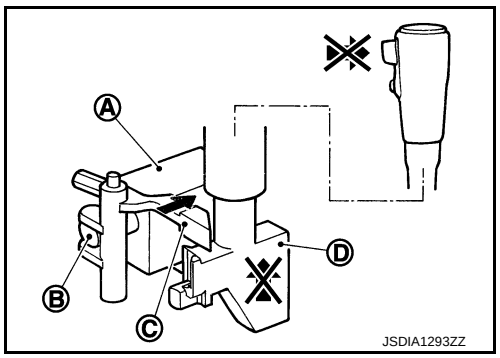


When Brake Pedal Is Depressed (Shift Operation Allowed)

The shift lock solenoid (A) is turned ON (energized) when the brake pedal is depressed with the ignition switch ON. The solenoid rod (B) is compressed by the electromagnetic force. The connecting lock lever (C) rotates when the solenoid is activated. Therefore, the pull rod (D) can be moved. For these reasons, the selector lever can be shifted to other positions.

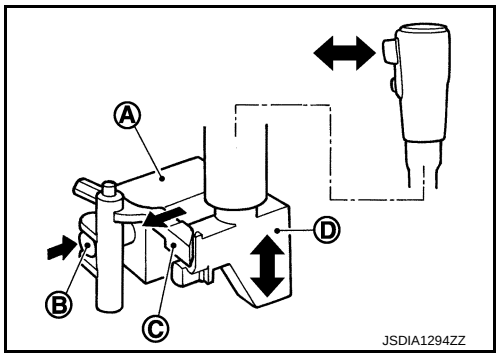


### “P” POSITION HOLD MECHANISM (IGNITION SWITCH LOCK)

The shift lock solenoid (A) is not energized when the ignition switch is in any position other than ON. In this condition, the shift mechanism is locked and “P” position is held. The operation cannot be performed from “P” position if the brake pedal is depressed with the ignition switch ON when the operation system of shift lock solenoid is malfunctioning. However, the lock lever (B) is forcibly rotated and the shift lock is released when the shift lock release button (C) is pressed from above. Then the selector operation from “P” position can be performed.

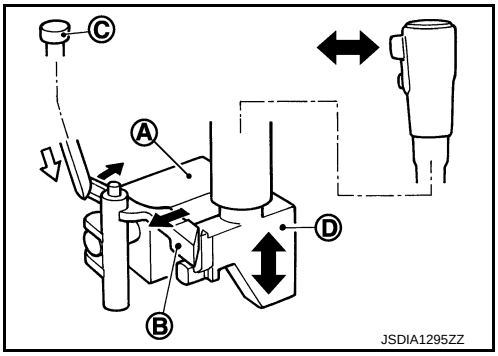


D : Pull rod

**CAUTION:**
**Use the shift lock release button only when the selector lever cannot be operated even if the brake pedal is depressed with the ignition switch ON.**

## WITH INTELLIGENT KEY SYSTEM : Component Parts Location

INFOID:0000000009948935

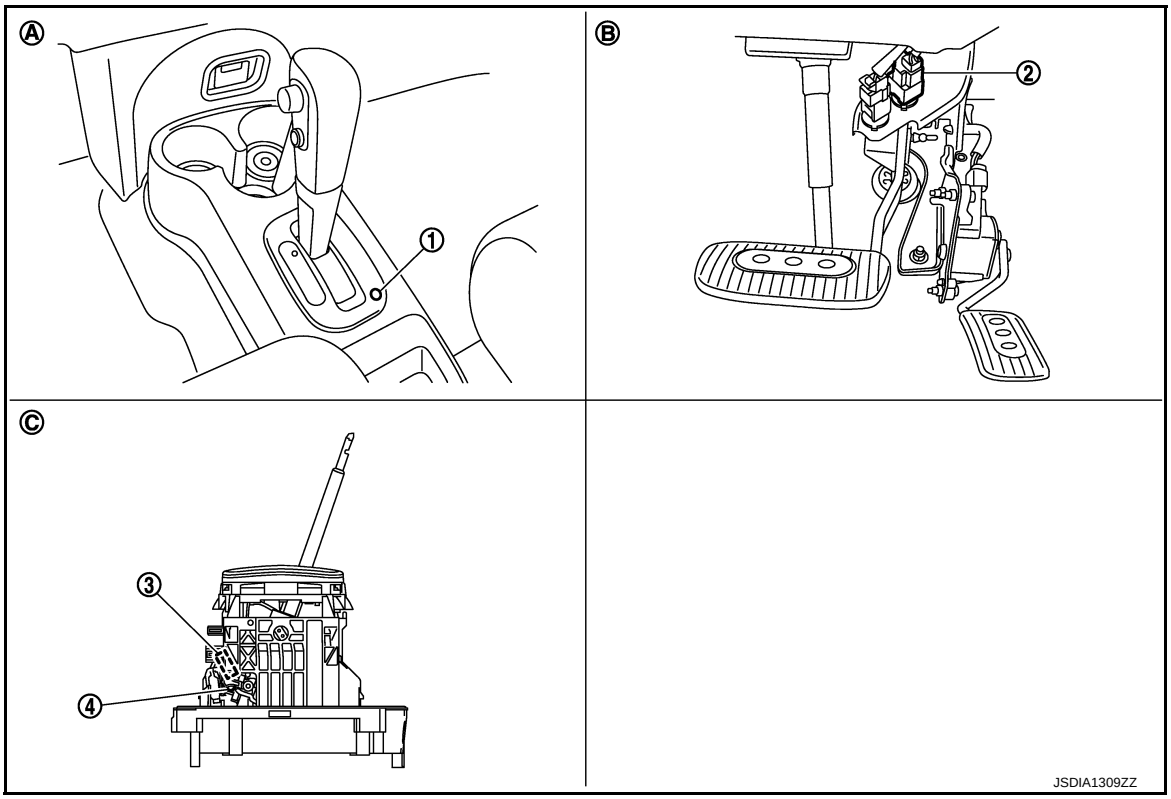


1. Shift lock release button
2. Stop lamp switch
3. Park position switch
4. Shift lock solenoid

A. Center console
B. Brake pedal, upper
C. CVT shift selector

## WITH INTELLIGENT KEY SYSTEM : Component Description

INFOID:0000000009948936

### SHIFT LOCK

| Component | Function |
|---|---|
| Shift lock solenoid | It operates according to the signal from the stop lamp switch and moves the lock lever. |
| Lock lever | It moves according to the operation of the shift lock solenoid and performs the release of the shift lock. |
| Pull rod | It links with the selector button and restricts the selector lever movement. |

| Component | Function |
|---|---|
| Park position switch | It detects that the selector lever is in “P” position. |
| Shift lock release button | It moves the lock lever forcibly. |

# WITHOUT INTELLIGENT KEY SYSTEM

## WITHOUT INTELLIGENT KEY SYSTEM : System Description

INFOID:0000000009948937

The shift lever cannot be shifted from the “P” position unless the brake pedal is depressed while the ignition switch is set to ON. The shift lock is unlocked by turning the shift lock solenoid ON when the ignition switch is set to ON, the park position switch is turned ON (selector lever is in “P” position), and the stop lamp switch is turned ON (brake pedal is depressed) as shown in the operation chart in the figure. Therefore, the shift lock solenoid receives no ON signal and the shift lock remains locked if all of the above conditions are not fulfilled. (However, selector operation is allowed if the shift lock release button is pressed.)

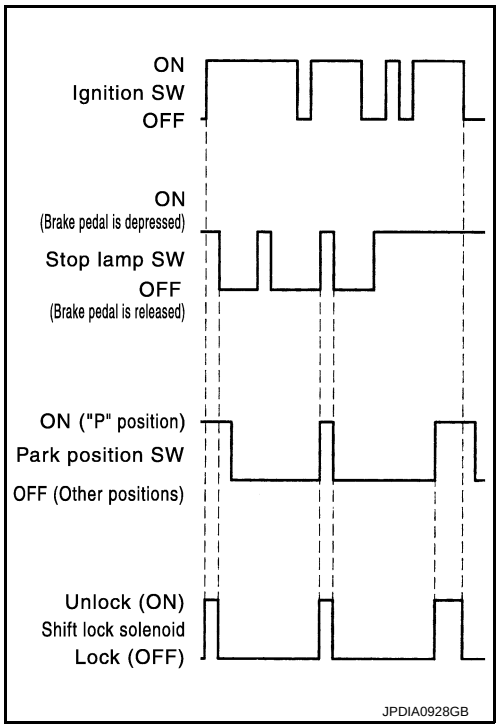


### SHIFT LOCK OPERATION AT “P” POSITION

When Brake Pedal Is Not Depressed (No Selector Operation Allowed)

The shift lock solenoid (A) is turned OFF (not energized) and the solenoid rod (B) is extended with the spring when the brake pedal is not depressed (no selector operation allowed) with the ignition switch ON.

The connecting lock lever (C) is located at the position shown in the figure when the solenoid rod is extended. It prevents the movement of the pull rod (D). For these reasons, the selector lever cannot be shifted from the “P” position.

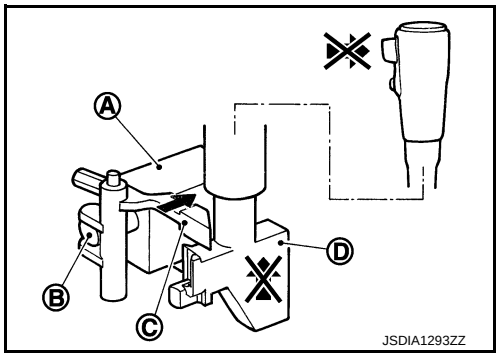


When Brake Pedal Is Depressed (Shift Operation Allowed)

The shift lock solenoid (A) is turned ON (energized) when the brake pedal is depressed with the ignition switch ON. The solenoid rod (B) is compressed by the electromagnetic force. The connecting lock lever (C) rotates when the solenoid is activated. Therefore, the pull rod (D) can be moved. For these reasons, the selector lever can be shifted to other positions.

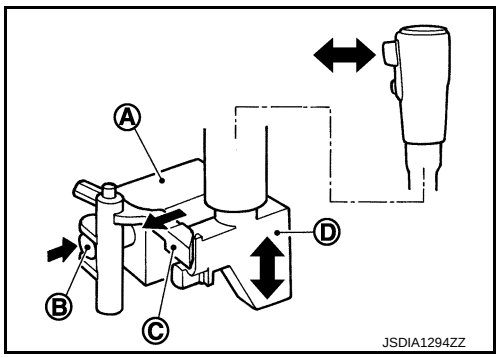

## “P” POSITION HOLD MECHANISM (IGNITION SWITCH LOCK)

The shift lock solenoid (A) is not energized when the ignition switch is in any position other than ON. In this condition, the shift mechanism is locked and “P” position is held. The operation cannot be performed from “P” position if the brake pedal is depressed with the ignition switch ON when the operation system of shift lock solenoid is malfunctioning. However, the lock lever (B) is forcibly rotated and the shift lock is released when the shift lock release button (C) is pressed from above. Then the selector operation from “P” position can be performed.

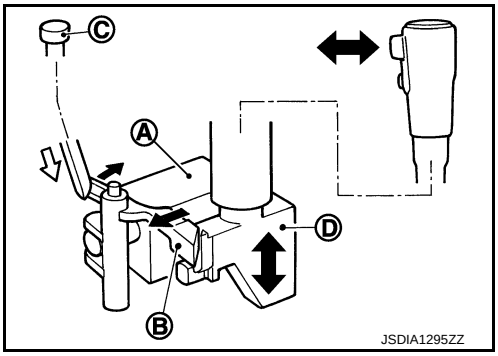


D : Pull rod

**CAUTION:**

**Use the shift lock release button only when the selector lever cannot be operated even if the brake pedal is depressed with the ignition switch ON.**

## KEY LOCK MECHANISM

The key cannot be set to LOCK when the selector lever is not selected to “P” position. This prevents the key from being removed from the key cylinder.

### Key Lock Status

The slider (B) in the key cylinder (A) is moved to the left side of the figure when the selector lever is in any positions other than “P” position. The rotator (D) that rotates together with the key (C) cannot be rotated for this reason. The key cannot be removed from the key cylinder because it cannot be turned to LOCK (E).

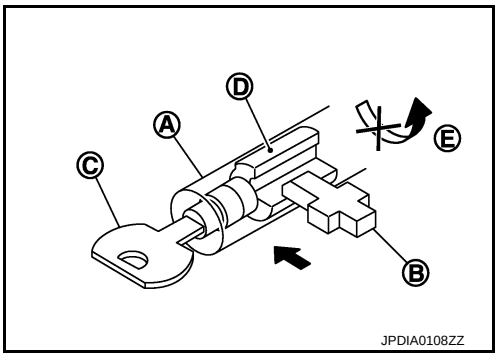


### Key Unlock Status

The slider (B) in the key cylinder (A) is moved to the right side of the figure when the selector lever is in “P” position and the finger is removed from the selector button. The rotator (C) can be rotated for this reason. The key (D) can be removed from the key cylinder because it can be turned to LOCK (E).

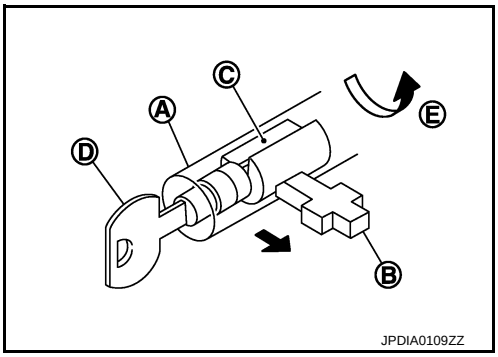

## WITHOUT INTELLIGENT KEY SYSTEM : Component Parts Location

INFOID:0000000009948938

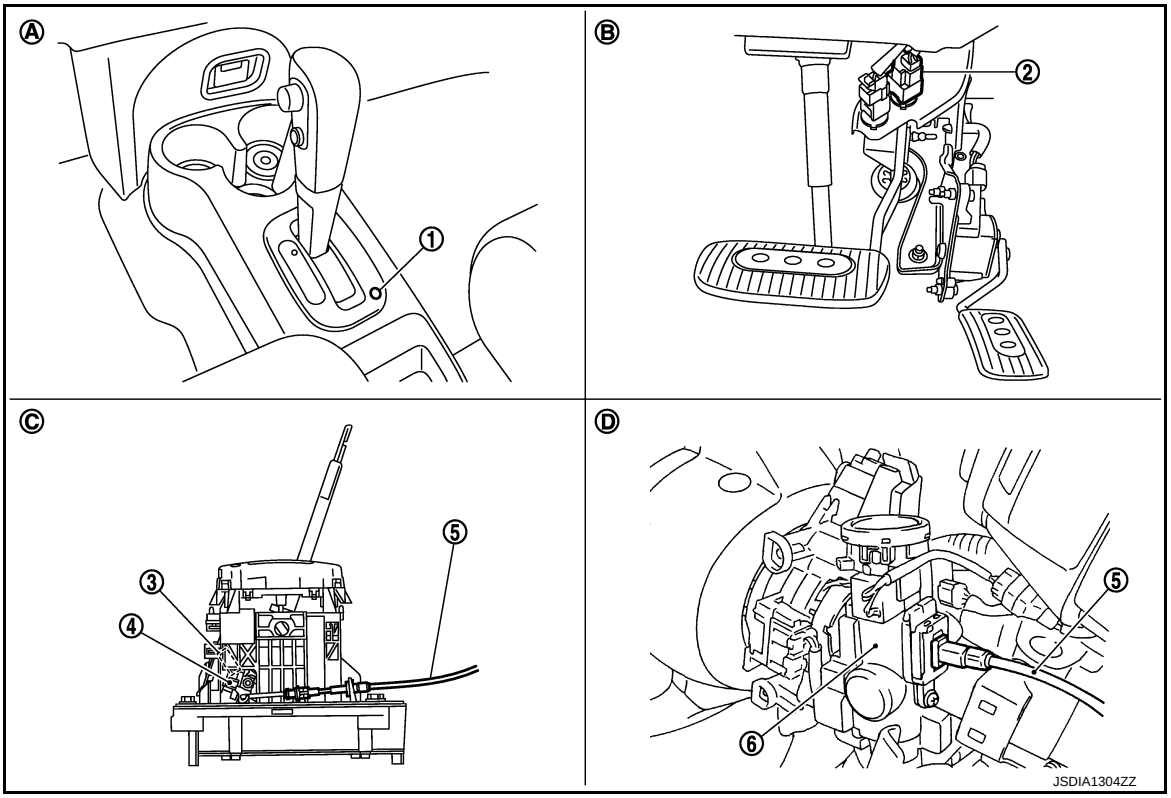


1. Shift lock release button
2. Stop lamp switch
3. Park position switch
4. Shift lock solenoid
5. Key interlock cable
6. Key cylinder

A. Center console
B. Brake pedal, upper
C. CVT shift selector
D. Key cylinder

## WITHOUT INTELLIGENT KEY SYSTEM : Component Description

INFOID:0000000009948939

### SHIFT LOCK

| Component | Function |
|---|---|
| Shift lock solenoid | It operates according to the signal from the stop lamp switch and moves the lock lever. |
| Lock lever | It moves according to the operation of the shift lock solenoid and performs the release of the shift lock. |
| Pull rod | It links with the selector button and restricts the selector lever movement. |
| Park position switch | It detects that the selector lever is in “P” position. |
| Key interlock cable and key interlock rod | It transmits the lock lever operation to the slider in the key cylinder. |
| Shift lock release button | It moves the lock lever forcibly. |

### KEY LOCK

| Component | | Function |
|---|---|---|
| Key cylinder | Rotator | It rotates together with the key and restricts the slider movement when the ignition switch is in LOCK position. |
| | Slider | It moves according to the rotation of the lock lever. |
| Key interlock cable and key interlock rod | | Actuation of lock lever is conveyed to slider in the key cylinder. |

# ON BOARD DIAGNOSTIC (OBD) SYSTEM

## Diagnosis Description

INFOID:0000000009948940

### DESCRIPTION

The CVT system has two self-diagnostic systems.
The first is the emission-related on board diagnostic system (OBD-II) performed by the TCM in combination with the ECM. A malfunction is indicated by the MIL (Malfunction Indicator Lamp) and is stored as a DTC in the ECM memory and in the TCM memory.
The second is the TCM original self-diagnosis performed by the TCM. A malfunction history is stored in the TCM memory. The detected items are overlapped with OBD-II self-diagnostic items. For details, refer to TM-186, "DTC Index".

### OBD-II FUNCTION

The ECM provides emission-related on board diagnostic (OBD-II) functions for the CVT system. One function is to receive a signal from the TCM used with OBD-related parts of the CVT system. The signal is sent to the ECM when a malfunction occurs in the corresponding OBD-related part. The other function is to indicate a diagnostic result by means of the MIL (Malfunction Indicator Lamp) on the instrument panel. Sensors, switches and solenoid valves are used as sensing elements.
The MIL automatically illuminates in “One or Two Trip Detection Logic” when a malfunction is sensed in relation to CVT system parts. For details, refer to EC-101, "Diagnosis Description".

# DIAGNOSIS SYSTEM (TCM)

## CONSULT Function

INFOID:0000000009948941

### FUNCTION

CONSULT can display each diagnostic item using the diagnostic test modes shown following.

| Diagnostic test mode | Function |
|---|---|
| Work Support | This mode enables a technician to adjust some devices faster and more accurately. |
| Self Diagnostic Results | Retrieve DTC from ECU and display diagnostic items. |
| Data Monitor | Monitor the input/output signal of the control unit in real time. |
| CAN Diagnosis | This mode displays a network diagnosis result about CAN by a diagram. |
| CAN Diagnosis Support Monitor | It monitors the status of CAN communication. |
| ECU Identification | Display the ECU identification number (part number etc.) of the selected system. |
| CALIB DATA | The calibration data status of TCM can be checked. |

### SELF DIAGNOSTIC RESULTS MODE

Refer to TM-186, "DTC Index".

### DATA MONITOR MODE

**NOTE:**

The following table includes information (items) inapplicable to this vehicle. For information (items) applicable to this vehicle, refer to CONSULT display items.

X: Standard, —: Not applicable, ▼: Option

| Monitored item | (Unit) | Monitor item selection | | | Remarks |
|---|---|---|---|---|---|
| | | ECU INPUT SIGNALS | MAIN SIGNALS | SELECTION FROM MENU | |
| VSP SENSOR | (km/h or mph) | X | — | ▼ | — |
| ESTM VSP SIG | (km/h or mph) | X | — | ▼ | — |
| PRI SPEED SEN | (rpm) | X | — | ▼ | — |
| ENG SPEED SIG | (rpm) | X | — | ▼ | Engine speed signal (Signal input via CAN communications) |
| SEC HYDR SEN | (V) | X | — | ▼ | — |
| PRI HYDR SEN | (V) | X | — | ▼ | Not mounted but displayed. |
| ATF TEMP SEN | (V) | X | — | ▼ | CVT fluid temperature sensor |
| VIGN SEN | (V) | X | — | ▼ | — |
| VEHICLE SPEED | (km/h or mph) | — | X | ▼ | Vehicle speed recognized by the TCM. |
| PRI SPEED | (rpm) | — | X | ▼ | Primary pulley speed |
| SEC SPEED | (rpm) | — | — | ▼ | Secondary pulley speed |
| ENG SPEED | (rpm) | — | X | ▼ | — |
| SLIP REV | (rpm) | — | X | ▼ | Difference between engine speed and primary pulley speed. |
| GEAR RATIO | | — | X | ▼ | — |
| G SPEED | (G) | — | — | ▼ | — |

| Monitored item | (Unit) | Monitor item selection | | | Remarks |
|---|---|---|---|---|---|
| | | ECU INPUT SIGNALS | MAIN SIGNALS | SELECTION FROM MENU | |
| ACC PEDAL OPEN | (0.0/8) | X | X | ▼ | Degree of opening for accelerator recognized by the TCM.<br>For fail-safe operation, the specific value used for control is displayed. |
| TRQ RTO | | — | — | ▼ | — |
| SEC PRESS | (MPa) | — | X | ▼ | — |
| PRI PRESS | (MPa) | — | X | ▼ | Not mounted but displayed. |
| ATFTEMP COUNT | | — | X | ▼ | Means CVT fluid temperature. Actual oil temperature °C (°F) numeric value is converted.<br>Refer to TM-203 |
| DSR REV | (rpm) | — | — | ▼ | — |
| DGEAR RATIO | | — | — | ▼ | — |
| DSTM STEP | (step) | — | — | ▼ | — |
| STM STEP | (step) | — | X | ▼ | — |
| LU PRS | (MPa) | — | — | ▼ | — |
| LINE PRS | (MPa) | — | — | ▼ | — |
| TGT SEC PRESS | (MPa) | — | — | ▼ | — |
| ISOLT1 | (A) | — | X | ▼ | Torque converter clutch solenoid valve output current |
| ISOLT2 | (A) | — | X | ▼ | Line pressure solenoid valve output current |
| ISOLT3 | (A) | — | X | ▼ | Secondary pressure solenoid valve output current |
| SOLMON1 | (A) | X | X | ▼ | Torque converter clutch solenoid valve monitor current |
| SOLMON2 | (A) | X | X | ▼ | Line pressure solenoid valve monitor current |
| SOLMON3 | (A) | X | X | ▼ | Secondary pressure solenoid valve monitor current |
| BRAKESW | (On/Off) | X | X | ▼ | Stop lamp switch signal (Signal input via CAN communications) |
| FULL SW | (On/Off) | X | X | ▼ | Full switch signal (Signal input via CAN communications) |
| IDLE SW | (On/Off) | X | X | ▼ | Idle switch signal (Signal input via CAN communications) |
| SPORT MODE SW | (On/Off) | X | X | ▼ | Overdrive control switch signal (Signal input via CAN communications) |
| STRDWNSW | (On/Off) | X | — | ▼ | Not mounted but displayed. |
| STRUPSW | (On/Off) | X | — | ▼ | |
| DOWNLVR | (On/Off) | X | — | ▼ | |
| UPLVR | (On/Off) | X | — | ▼ | |
| NONMMODE | (On/Off) | X | — | ▼ | |
| MMODE | (On/Off) | X | — | ▼ | |
| INDLRNG | (On/Off) | — | — | ▼ | “L” position indicator output |

| Monitored item | (Unit) | Monitor item selection | | | Remarks |
|---|---|---|---|---|---|
| | | ECU INPUT SIGNALS | MAIN SIGNALS | SELECTION FROM MENU | |
| INDDRNG | (On/Off) | — | — | ▼ | “D” position indicator output |
| INDNRNG | (On/Off) | — | — | ▼ | “N” position indicator output |
| INDRRNG | (On/Off) | — | — | ▼ | “R” position indicator output |
| INDPRNG | (On/Off) | — | — | ▼ | “P” position indicator output |
| CVT LAMP | (On/Off) | — | — | ▼ | — |
| SPORT MODE IND | (On/Off) | — | — | ▼ | — |
| MMODE IND | (On/Off) | — | — | ▼ | Not mounted but displayed. |
| SMCOIL D | (On/Off) | — | — | ▼ | Step motor coil “D” energizing status |
| SMCOIL C | (On/Off) | — | — | ▼ | Step motor coil “C” energizing status |
| SMCOIL B | (On/Off) | — | — | ▼ | Step motor coil “B” energizing status |
| SMCOIL A | (On/Off) | — | — | ▼ | Step motor coil “A” energizing status |
| LUSEL SOL OUT | (On/Off) | — | — | ▼ | — |
| LUSEL SOL MON | (On/Off) | — | — | ▼ | — |
| VDC ON | (On/Off) | X | — | ▼ | — |
| TCS ON | (On/Off) | X | — | ▼ | — |
| ABS ON | (On/Off) | X | — | ▼ | — |
| ACC ON | (On/Off) | X | — | ▼ | Not mounted but displayed. |
| RANGE | | — | X | ▼ | Indicates position is recognized by TCM. Indicates a specific value required for control when fail-safe function is activated. |
| M GEAR POS | | — | X | ▼ | — |
| D POSITION SW | (On/Off) | X | — | ▼ | |
| N POSITION SW | (On/Off) | X | — | ▼ | — |
| L POSITION SW | (On/Off) | X | — | ▼ | — |
| P POSITION SW | (On/Off) | X | — | ▼ | — |
| R POSITION SW | (On/Off) | X | — | ▼ | — |
| CVT-A | | — | — | ▼ | This monitor item does not use. |
| CVT-B | | — | — | ▼ | This monitor item does not use. |

## WORK SUPPORT MODE

| Item name | Description |
|---|---|
| ENGINE BRAKE ADJ. | The engine brake level setting can be canceled. |
| CONFORM CVTF DETERIORTN | The CVT fluid deterioration level can be checked. |

Engine Brake Adjustment

Under normal operating conditions of the transaxle main body and CVT system, if a customer indicates strangeness of involuntary application of the brake on a downhill run, engine brake is allowed to be released in accordance with “Engine Brake Adjustment”.

**"ENGINE BRAKE LEVEL"**

**0: Initial set value (Engine brake level control is activated)**

**OFF: Engine brake level control is deactivated.**

**CAUTION:**
**Mode of "+1", "0", "–1", "–2", "OFF" can be selected by touching "UP" or "DOWN" on CONSULT screen. However, do not select mode other than "0" and "OFF". Selecting "+1" or "–1" or "–2" is selected, that may cause irregular driveability.**

Conform CVTF Deterioration
- Check CVT fluid deterioration level when driving under severe conditions.

**"CVTF DETERIORATION DATE"**

**More than 210000:**

**It is necessary to change CVT fluid.**

**Less than 210000:**

**It is not necessary to change CVT fluid.**

- How to Erase CVT Fluid Deterioration Date
- Select "clear".

Calibration Data
After replacing transaxle assembly, it is necessary to initialize ROM data of TCM. Checking calibration data makes it possible to check that initialization is successful.

## Diagnostic Tool Function

INFOID:0000000009948942

### OBD-II SELF-DIAGNOSTIC PROCEDURE (WITH GST)

Refer to EC-101, "GST (Generic Scan Tool)".

# DTC/CIRCUIT DIAGNOSIS

## U0100 LOST COMMUNICATION (ECM A)

### Description

INFOID:0000000009948943

CAN (Controller Area Network) is a serial communication line for real-time application. It is an on-vehicle multiplex communication line with high data communication speed and excellent malfunction detection ability. Many electronic control units are equipped onto a vehicle, and each control unit shares information and links with other control units during operation (not independently). In CAN communication, control units are connected with 2 communication lines (CAN-H line, CAN-L line) allowing a high rate of information transmission with less wiring. Each control unit transmits/receives data but selectively reads required data only.

### DTC Logic

INFOID:0000000009948944

#### DTC DETECTION LOGIC

| DTC | Trouble diagnosis name | DTC detection condition | Possible causes |
|---|---|---|---|
| U0100 | Lost Communication With ECM/PCM A | When the ignition switch is ON, TCM is unable to receive the CAN communications signal from ECM continuously for 2 seconds or more. | • ECM<br>• Harness or connector<br>(CAN communication line is open or shorted) |

#### DTC CONFIRMATION PROCEDURE

**1.** PREPARATION BEFORE WORK

If another “DTC CONFIRMATION PROCEDURE” occurs just before, turn ignition switch OFF and wait for at least 10 seconds, then perform the next test.

>> GO TO 2.

**2.** PERFORM DTC CONFIRMATION PROCEDURE

With CONSULT
1. Start the engine and wait for at least 5 seconds.
2. Check DTC.

With GST
Follow the procedure “With CONSULT”.

Is “U0100” detected?

YES >> Go to TM-103, "Diagnosis Procedure".
NO >> INSPECTION END

### Diagnosis Procedure

INFOID:0000000009948945

For the diagnosis procedure, refer to LAN-13, "Trouble Diagnosis Flow Chart".

# U1000 CAN COMM CIRCUIT

## Description

INFOID:0000000009948946

Real time communication is performed between each control unit such as TCM, ECM, combination meter, or others. Information is shared and linked between other control units. Each system is optimally controlled according to driving conditions of the vehicle.
In CAN (Controller Area Network) communication, 2 control units are connected via 2 communication lines (CAN-H and CAN-L) allowing a high rate of information transmission via less wiring. Each control unit transmits/receives data but selectively reads required data only.

## DTC Logic

INFOID:0000000009948947

### DTC DETECTION LOGIC

| DTC | Trouble diagnosis name | DTC is detected if... | Possible cause |
|---|---|---|---|
| U1000 | CAN communication line | TCM cannot transmit and receive CAN communication signals continuously for 2 seconds or more | • CAN communication line<br>• Each control unit |

### DTC CONFIRMATION PROCEDURE

#### 1. PRECONDITIONING

Immediately after performing any “DTC CONFIRMATION PROCEDURE”, always turn ignition switch OFF. Then wait at least 10 seconds before performing the next test.

>> GO TO 2.

#### 2. PERFORM DTC CONFIRMATION PROCEDURE

With CONSULT
1. Start the engine.
2. Maintain idling state for 2 seconds or more.
3. Select “Self Diagnostic Results” in “TRANSMISSION”.

With GST
Follow the procedure “With CONSULT”.

Is “U1000” detected?

YES >> Go to TM-104, "Diagnosis Procedure".
NO >> INSPECTION END

## Diagnosis Procedure

INFOID:0000000009948948

Go to LAN-22, "CAN System Specification Chart".

# U1010 CONTROL UNIT (CAN)

## Description

INFOID:0000000009948949

Real time communication is performed between each control unit such as TCM, ECM, combination meter, or others. Information is shared and linked between other control units. Each system is optimally controlled according to driving conditions of the vehicle.
In CAN (Controller Area Network) communication, 2 control units are connected via 2 communication lines (CAN-H and CAN-L) allowing a high rate of information transmission via less wiring. Each control unit transmits/receives data but selectively reads required data only.

## DTC Logic

INFOID:0000000009948950

### DTC DETECTION LOGIC

| DTC | Trouble diagnosis name | DTC is detected if... | Possible cause |
|---|---|---|---|
| U1010 | TCM Communication Malfunction | TCM detects a malfunction in CAN communication initial diagnosis (control unit malfunction) | TCM |

### DTC CONFIRMATION PROCEDURE

#### 1. PRECONDITIONING

Immediately after performing any “DTC CONFIRMATION PROCEDURE”, always turn ignition switch OFF. Then wait at least 10 seconds before performing the next test.

>> GO TO 2.

#### 2. PERFORM DTC CONFIRMATION PROCEDURE

With CONSULT
1. Start the engine.
2. Maintain idling state for 6 seconds or more.
3. Select “Self Diagnostic Results” in “TRANSMISSION”.

Is “U1010” detected?

YES >> Go to TM-105, "Diagnosis Procedure".
NO >> INSPECTION END

## Diagnosis Procedure

INFOID:0000000009948951

#### 1. CHECK INTERMITTENT INCIDENT

Refer to GI-40, "Intermittent Incident".

Is the inspection result normal?

YES >> Replace TCM. Refer to TM-223, "Exploded View".
NO >> Repair or replace damaged parts.

# P0703 BRAKE SWITCH B

## Description

INFOID:0000000009948952

- Stop lamp switch is installed to upper part of brake pedal.
- Stop lamp switch detects that brake pedal is depressed.
- Stop lamp switch transmits a signal of brake pedal depression to BCM.
- TCM receives stop lamp switch signal (CAN signal) from BCM.

## DTC Logic

INFOID:0000000009948953

### DTC DETECTION LOGIC

| DTC | Trouble diagnosis name | DTC is detected if... | Possible cause |
|---|---|---|---|
| P0703 | Brake Switch B Circuit | • TCM detects malfunction in CAN communication between BCM<br>• TCM detects a state that ON/OFF of stop lamp switch signal is not switched | • Harness or connectors<br>(CAN communication line is open or shorted.)<br>(Stop lamp switch circuit is open or shorted.)<br>• Stop lamp switch<br>• BCM |

### DTC CONFIRMATION PROCEDURE

**CAUTION:**

**Always drive vehicle at a safe speed.**

#### 1. PRECONDITIONING

Immediately after performing any “DTC CONFIRMATION PROCEDURE”, always turn ignition switch OFF. Then wait at least 10 seconds before performing the next test.

>> GO TO 2.

#### 2. PERFORM DTC CONFIRMATION PROCEDURE

With CONSULT

1. Start the engine.
2. Select “Data Monitor” in “TRANSMISSION”.
3. Select “VEHICLE SPEED”.
4. Drive the vehicle.
5. Maintain the following conditions for 10 seconds or more.

| | |
|---|---|
| VEHICLE SPEED | : More than 30 km/h (19 MPH) |

6. Depress brake pedal and stop the vehicle.
7. Turn ignition switch OFF.
8. Repeat the above steps 4 to 7 two times.
9. Turn ignition switch ON.
10. Select “Self Diagnostic Results” in “TRANSMISSION”.

Is “P0703” detected?

YES >> Go to TM-106, "Diagnosis Procedure".
NO >> INSPECTION END

## Diagnosis Procedure

INFOID:0000000009948954

#### 1. CHECK STOP LAMP SWITCH POWER CIRCUIT

1. Turn ignition switch OFF.
2. Disconnect stop lamp switch connector.
3. Check voltage between stop lamp switch vehicle side harness connector terminal and ground.

| Stop lamp switch vehicle side harness connector | | Ground | Voltage (Approx.) |
|---|---|---|---|
| Connector | Terminal | | |
| E115 | 1 | | Battery voltage |

Is the inspection result normal?

YES >> GO TO 2.
NO >> GO TO 7.

## 2. CHECK HARNESS BETWEEN BCM AND STOP LAMP SWITCH (PART 1)

1. Disconnect BCM connector.
2. Check continuity between BCM vehicle side harness connector terminal and stop lamp switch vehicle side harness connector terminal.

With intelligent key system

| BCM vehicle side harness connector | | Stop lamp switch vehicle side harness connector | | Continuity |
|---|---|---|---|---|
| Connector | Terminal | Connector | Terminal | |
| M68 | 9 | E115 | 2 | Existed |

Without intelligent key system

| BCM vehicle side harness connector | | Stop lamp switch vehicle side harness connector | | Continuity |
|---|---|---|---|---|
| Connector | Terminal | Connector | Terminal | |
| M65 | 9 | E115 | 2 | Existed |

Is the inspection result normal?

YES >> GO TO 3.
NO >> Repair or replace damaged parts.

## 3. CHECK HARNESS BETWEEN BCM AND STOP LAMP SWITCH (PART 2)

Check continuity between BCM vehicle side harness connector terminal and ground.

With intelligent key system

| BCM vehicle side harness connector | | Ground | Continuity |
|---|---|---|---|
| Connector | Terminal | | |
| M68 | 9 | | Not existed |

Without intelligent key system

| BCM vehicle side harness connector | | Ground | Continuity |
|---|---|---|---|
| Connector | Terminal | | |
| M65 | 9 | | Not existed |

Is the inspection result normal?

YES >> GO TO 4.
NO >> Repair or replace damaged parts.

## 4. CHECK STOP LAMP SWITCH (PART 1)

Check stop lamp switch. Refer to TM-108, "Component Inspection (Stop Lamp Switch)".

Is the inspection result normal?

YES >> GO TO 7.
NO >> GO TO 5.

## 5. PERFORM STOP LAMP SWITCH INSTALLATION POSITION ADJUSTMENT

Perform stop lamp switch installation position adjustment. Refer to BR-7, "Inspection and Adjustment".

>> GO TO 6.

## 6. CHECK STOP LAMP SWITCH (PART 2)

Check stop lamp switch. Refer to TM-108, "Component Inspection (Stop Lamp Switch)".

Is the inspection result normal?

YES >> INSPECTION END
NO >> Replace stop lamp switch. Refer to BR-17, "Exploded View".

## 7. DETECT MALFUNCTIONING ITEMS

Check the following.
- 10A fuse (No.9)
- Harness for short or open between battery and stop lamp switch (Refer to PG-6, "Wiring Diagram - BATTERY POWER SUPPLY -".)
- Battery

Is the inspection result normal?

YES >> GO TO 8.
NO >> Repair or replace damaged parts.

## 8. CHECK INTERMITTENT INCIDENT

Refer to GI-40, "Intermittent Incident".

Is the inspection result normal?

YES >> Replace BCM. Refer to BCS-88, "Exploded View" (With intelligent key system), BCS-155, "Exploded View" (Without intelligent key system).
NO >> Repair or replace damaged parts.

# Component Inspection (Stop Lamp Switch)

INFOID:0000000009948955

## 1. CHECK STOP LAMP SWITCH

Check continuity between stop lamp switch connector terminals.

| Stop lamp switch connector | | | Condition | Continuity |
|---|---|---|---|---|
| Connector | Terminal | | | |
| E115 | 1 | 2 | Depressed brake pedal | Existed |
| | | | Brake pedal not depressed | Not existed |
| | 3 | 4 | Depressed brake pedal | Existed |
| | | | Brake pedal not depressed | Not existed |

Is the inspection result normal?

YES >> INSPECTION END
NO >> Replace stop lamp switch. Refer to BR-17, "Exploded View".

# P0705 TRANSMISSION RANGE SWITCH A

## Description

INFOID:0000000009948956

- Transmission range switch is installed to upper part of transaxle case.
- Transmission range switch detects the selector lever position and transmits selector lever position signal to TCM.

## DTC Logic

INFOID:0000000009948957

### DTC DETECTION LOGIC

| DTC | Trouble diagnosis name | DTC is detected if... | Possible cause |
|---|---|---|---|
| P0705 | Transmission Range Sensor A Circuit (PRNDL Input) | • Range signal is not transmitted to TCM<br>• 2 or more range signals are transmitted to TCM | • Harness or connectors [Transmission range switch circuit is open or shorted.]<br>• Transmission range switch |

### DTC CONFIRMATION PROCEDURE

**1.** PRECONDITIONING

Immediately after performing any “DTC CONFIRMATION PROCEDURE”, always turn ignition switch OFF. Then wait at least 10 seconds before performing the next test.

>> GO TO 2.

**2.** PERFORM DTC CONFIRMATION PROCEDURE

With CONSULT
1. Start the engine.
2. Shift and hold selector lever to each position for 5 seconds or more.
3. Select “Self Diagnostic Results” in “TRANSMISSION”.

With GST
Follow the procedure “With CONSULT”.

Is “P0705” detected?

YES >> Go to TM-109, "Diagnosis Procedure".
NO >> INSPECTION END

## Diagnosis Procedure

INFOID:0000000009948958

**1.** CHECK TRANSMISSION RANGE SWITCH POWER CIRCUIT

1. Turn ignition switch OFF.
2. Disconnect transmission range switch connector.
3. Turn ignition switch ON.
4. Check voltage between transmission range switch vehicle side harness connector terminal and ground.

| Transmission range switch vehicle side harness connector | | Ground | Condition | Voltage (Approx.) |
|---|---|---|---|---|
| Connector | Terminal | | | |
| F21 | 3 | | Ignition switch: ON | Battery voltage |
| | | | Ignition switch: OFF | 0 V |

Is the inspection result normal?

YES >> GO TO 2.
NO >> GO TO 5.

**2.** CHECK HARNESS BETWEEN TCM AND TRANSMISSION RANGE SWITCH (PART 1)

1. Turn ignition switch OFF.
2. Disconnect TCM connector.

3. Check continuity between TCM vehicle side harness connector terminals and transmission range switch vehicle side harness connector terminals.

| TCM vehicle side harness connector | | Transmission range switch vehicle side harness connector | | Continuity |
|---|---|---|---|---|
| Connector | Terminal | Connector | Terminal | |
| E18 | 18 | F21 | 4 | Existed |
| | 22 | | 5 | |
| E19 | 26 | | 6 | |
| | 43 | | 7 | |
| | 44 | | 8 | |

Is the inspection result normal?

YES >> GO TO 3.
NO >> Repair or replace damaged parts.

## 3. CHECK HARNESS BETWEEN TCM AND TRANSMISSION RANGE SWITCH (PART 2)

Check continuity between TCM vehicle side harness connector terminal and ground.

| TCM vehicle side harness connector | | | Continuity |
|---|---|---|---|
| Connector | Terminal | | |
| E18 | 18 | Ground | Not existed |
| | 22 | | |
| E19 | 26 | | |
| | 43 | | |
| | 44 | | |

Is the inspection result normal?

YES >> GO TO 4.
NO >> Repair or replace damaged parts.

## 4. CHECK TRANSMISSION RANGE SWITCH

1. Remove control cable from manual lever. Refer to TM-219, "Exploded View".
2. Check transmission range switch. Refer to TM-111, "Component Inspection (Transmission Range Switch)".

Is the inspection result normal?

YES >> Check intermittent incident. Refer to GI-40, "Intermittent Incident".
NO >> Transmission range switch is malfunctioning. Replace transaxle assembly. Refer to TM-235, "Exploded View".

## 5. CHECK HARNESS BETWEEN TRANSMISSION RANGE SWITCH AND IPDM E/R (PART 1)

1. Turn ignition switch OFF.
2. Disconnect IPDM E/R connector.
3. Check continuity between transmission range switch vehicle side harness connector terminals and IPDM E/R vehicle side harness connector terminals.

| Transmission range switch vehicle side harness connector | | IPDM E/R vehicle side harness connector | | Continuity |
|---|---|---|---|---|
| Connector | Terminal | Connector | Terminal | |
| F21 | 3 | E15 | 58 | Existed |

Is the inspection result normal?

YES >> GO TO 6.
NO >> Repair or replace damaged parts.

## 6. CHECK HARNESS BETWEEN TRANSMISSION RANGE SWITCH AND IPDM E/R (PART 2)

Check continuity between transmission range switch vehicle side harness connector terminal and ground.

| Transmission range switch vehicle side harness connector | | Ground | Continuity |
|---|---|---|---|
| Connector | Terminal | | |
| F21 | 3 | | Not existed |

Is the inspection result normal?

YES >> GO TO 7.
NO >> Repair or replace damaged parts.

## 7. DETECT MALFUNCTIONING ITEMS

Check the following.
- IPDM E/R
- 10A fuse (No.55, located in the IPDM E/R)
- Harness for short or open between IPDM E/R and ignition switch (Refer to PG-33, "Wiring Diagram - IGNITION POWER SUPPLY -".)
- Ignition switch

Is the inspection result normal?

YES >> Check intermittent incident. Refer to GI-40, "Intermittent Incident".
NO >> Repair or replace damaged parts.

# Component Inspection (Transmission Range Switch)

INFOID:0000000009948959

## 1. CHECK TRANSMISSION RANGE SWITCH

Check continuity of transmission range switch connector terminals.

| Transmission range switch connector | | | Condition | Continuity |
|---|---|---|---|---|
| Connector | Terminal | | | |
| F21 | 1 | 2 | Manual lever: “P” and “N” positions | Existed |
| | | | Other than the above | Not existed |
| | 3 | 4 | Manual lever: “P” position | Existed |
| | | | Other than the above | Not existed |
| | 3 | 5 | Manual lever: “R” position | Existed |
| | | | Other than the above | Not existed |
| | 3 | 6 | Manual lever: “N” position | Existed |
| | | | Other than the above | Not existed |
| | 3 | 7 | Manual lever: “D” position | Existed |
| | | | Other than the above | Not existed |
| | 3 | 8 | Manual lever: “L” position | Existed |
| | | | Other than the above | Not existed |

Is the inspection result normal?

YES >> INSPECTION END
NO >> Transmission range switch is malfunctioning. Replace transaxle assembly. Refer to TM-235, "Exploded View".

# P0710 TRANSMISSION FLUID TEMPERATURE SENSOR A

## Description

INFOID:0000000009948960

- CVT fluid temperature sensor is installed to control valve.
- CVT fluid temperature sensor detects CVT fluid temperature in oil pan.
- The CVT fluid temperature sensor converts CVT fluid temperature into output voltage and transmits the signal to TCM.
- The CVT fluid temperature sensor uses a thermistor and its electrical resistance varies as the temperature varies. The electrical resistance decreases as the temperature increases.

## DTC Logic

INFOID:0000000009948961

### DTC DETECTION LOGIC

| DTC | Trouble diagnosis name | DTC is detected if... | Possible cause |
|---|---|---|---|
| P0710 | Transmission Fluid Temperature Sensor A Circuit | • CVT fluid temperature does not rise to 10°C (50°F) after driving for a certain period of time with the TCM-received fluid temperature sensor value between –40°C (–40°F) and 9°C (48.2°F).<br>• CVT fluid temperature sensor value that TCM receives is more than 180°C (356°F)<br>• TCM-received CVT fluid temperature sensor value while driving is less than –40°C (–40°F)<br>• When compared with value of ECT sensor temperature,<br>- the value of CVT fluid temperature sensor is higher by more than 38°C (100°F).<br>- the value of CVT fluid temperature sensor is lower by more than 27°C (81°F). | • Harness or connectors (CVT fluid temperature sensor circuit is open or shorted.)<br>• CVT fluid temperature sensor |

### DTC CONFIRMATION PROCEDURE

**CAUTION:**

**Always drive vehicle at a safe speed.**

**NOTE:**

Immediately after performing any “DTC CONFIRMATION PROCEDURE”, always turn ignition switch OFF. Then wait at least 10 seconds before performing the next test.

#### 1. CHECK DTC DETECTION (PART 1)

1. Start the engine.
2. Maintain the following condition for 5 seconds or more.

Vehicle speed : 20 km/h (12 MPH) or more

3. Stop the vehicle.
4. Check the first trip DTC.

Is “P0710” detected?

YES >> Go to TM-113, "Diagnosis Procedure".
NO >> GO TO 2.

#### 2. CHECK DTC DETECTION (PART 2)

With CONSULT

1. Turn ignition switch OFF and cool the engine.
2. Turn ignition switch ON.
   **CAUTION:**
   **Never start the engine.**
3. Select “Data Monitor” in “TRANSMISSION”.
4. Select “FLUID TEMP”.
5. Record CVT fluid temperature.
6. Start the engine and wait for at least 3 minutes.

7. Drive the vehicle for the total minutes specified in the Driving time column below with the following conditions satisfied.

| | |
|---|---|
| Selector lever | : “D” position |
| Accelerator pedal position | : 1.0/8 or more |
| Vehicle speed | : 10 km/h (7 MPH) or more |

| CVT fluid temperature before engine start | Driving time |
|---|---|
| –40°C (–40°F) – –31°C (–23.8°F) | 18 minutes or more |
| –30°C (–22°F) – –21°C (–5.8°F) | 16 minutes or more |
| –20°C (–4°F) – –11°C (–12.2°F) | 13 minutes or more |
| –10°C (14°F) – –1°C (30.2°F) | 10 minutes or more |
| 0°C (32°F) – 9°C (48.2°F) | 7 minutes or more |
| 10°C (50°F) or more | — (Go to 3.) |

8. Stop the vehicle.
9. Check the first trip DTC.

With GST

1. Turn ignition switch OFF and cool the engine.
2. Start the engine and wait for at least 3 minutes.
3. Drive the vehicle and maintain the following conditions for 18 minutes or more.

| | |
|---|---|
| Selector lever | : “D” position |
| Accelerator pedal position | : 1.0/8 or more |
| Vehicle speed | : 10 km/h (7 MPH) or more |

4. Stop the vehicle.
5. Check the first trip DTC.

Is “P0710” detected?

YES >> Go to TM-113, "Diagnosis Procedure".
NO >> GO TO 3.

## 3. CHECK CVT FLUID TEMPERATURE SENSOR

1. Turn ignition switch OFF.
2. Disconnect CVT unit connector.
3. Check resistance between CVT unit connector terminals.

| CVT unit | | | Condition | Resistance (Approx.) |
|---|---|---|---|---|
| Connector | Terminal | | | |
| F24 | 17 | 19 | When CVT fluid temperature is 20°C (68°F) | 6.83 – 6.29 kΩ |
| | | | When CVT fluid temperature is 50°C (122°F) | 2.25 – 2.10 kΩ |
| | | | When CVT fluid temperature is 80°C (176°F) | 0.90 – 0.85 kΩ |

Is the inspection result normal?

YES >> INSPECTION END
NO >> Replace the transaxle assembly due to malfunction in the CVT fluid temperature sensor. Refer to TM-235, "Exploded View".

# Diagnosis Procedure

INFOID:0000000009948963

## 1. CHECK CVT FLUID TEMPERATURE SENSOR CIRCUIT (PART 1)

1. Turn ignition switch ON.
2. Check resistance between TCM vehicle side harness connector terminals.

| TCM connector | | | Condition | Resistance (Approx.) |
|---|---|---|---|---|
| Connector | Terminal | | | |
| E19 | 47 | 42 | CVT fluid temperature: 20°C (68°F) | 6.83 – 6.29 kΩ |
| | | | CVT fluid temperature: 50°C (122°F) | 2.25 – 2.10 kΩ |
| | | | CVT fluid temperature: 80°C (176°F) | 0.90 – 0.85 kΩ |

Is the inspection result normal?

YES >> GO TO 2.
NO >> GO TO 3.

## 2. CHECK CVT FLUID TEMPERATURE SENSOR CIRCUIT (PART 2)

1. Disconnect TCM connector.
2. Check continuity between TCM vehicle side harness connector terminal and ground.

| TCM vehicle side harness connector | | Ground | Continuity |
|---|---|---|---|
| Connector | Terminal | | |
| E19 | 47 | | Not existed |

Is the inspection result normal?

YES >> Check intermittent incident. Refer to GI-40, "Intermittent Incident".
NO >> GO TO 3.

## 3. CHECK CVT FLUID TEMPERATURE SENSOR

1. Turn ignition switch OFF.
2. Disconnect CVT unit connector.
3. Check CVT fluid temperature sensor. Refer to TM-115, "Component Inspection (CVT Fluid Temperature Sensor)".

Is the inspection result normal?

YES >> GO TO 4.
NO >> CVT fluid temperature sensor is malfunctioning. Replace transaxle assembly. Refer to TM-235, "Exploded View".

## 4. CHECK HARNESS BETWEEN TCM AND CVT UNIT (CVT FLUID TEMPERATURE SENSOR) (PART 1)

1. Disconnect TCM connector.
2. Check continuity between TCM vehicle side harness connector terminals and CVT unit vehicle side harness connector terminals.

| TCM vehicle side harness connector | | CVT unit vehicle side harness connector | | Continuity |
|---|---|---|---|---|
| Connector | Terminal | Connector | Terminal | |
| E19 | 42 | F24 | 19 | Existed |
| | 47 | | 17 | |

Is the inspection result normal?

YES >> GO TO 5.
NO >> Repair or replace damaged parts.

## 5. CHECK HARNESS BETWEEN TCM AND CVT UNIT (CVT FLUID TEMPERATURE SENSOR) (PART 2)

Check continuity between TCM vehicle side harness connector terminals and ground.

| TCM vehicle side harness connector | | Ground | Continuity |
|---|---|---|---|
| Connector | Terminal | | |
| E19 | 42 | | Not existed |
| | 47 | | |

Is the inspection result normal?

YES >> Check intermittent incident. Refer to GI-40, "Intermittent Incident".

NO >> Repair or replace damaged parts.

## Component Inspection (CVT Fluid Temperature Sensor)

INFOID:0000000009948964

### 1. CHECK CVT FLUID TEMPERATURE SENSOR (PART 1)

Check resistance between CVT unit harness connector terminals.

| CVT unit harness connector | | | Condition | Resistance (Approx.) |
|---|---|---|---|---|
| Connector | Terminal | | | |
| F24 | 17 | 19 | CVT fluid temperature: 20°C (68°F) | 6.83 – 6.29 kΩ |
| | | | CVT fluid temperature: 50°C (122°F) | 2.25 – 2.10 kΩ |
| | | | CVT fluid temperature: 80°C (176°F) | 0.90 – 0.85 kΩ |

Is the inspection result normal?

YES >> GO TO 2.
NO >> CVT fluid temperature sensor is malfunctioning. Replace transaxle assembly. Refer to TM-235, "Exploded View".

### 2. CHECK CVT FLUID TEMPERATURE SENSOR (PART 2)

Check continuity between CVT unit vehicle side harness connector terminal and ground.

| CVT unit harness connector | | Ground | Continuity |
|---|---|---|---|
| Connector | Terminal | | |
| F24 | 17 | | Not existed |

Is the inspection result normal?

YES >> INSPECTION END
NO >> CVT fluid temperature sensor is malfunctioning. Replace transaxle assembly. Refer to TM-235, "Exploded View".

# P0715 INPUT SPEED SENSOR A

## Description

INFOID:0000000009948965

- Primary speed sensor is installed to the front side of transaxle case.
- Primary speed sensor detects primary pulley speed.
- Primary speed sensor converts primary pulley speed to pulse signal and transmits the signal to TCM.

## DTC Logic

INFOID:0000000009948966

### DTC DETECTION LOGIC

| DTC | Trouble diagnosis name | DTC is detected if... | Possible cause |
|---|---|---|---|
| P0715 | Input/Turbine Speed Sensor A Circuit | • Primary speed sensor signal is not transmitted to TCM<br>• Primary speed sensor value is less than 150 rpm while secondary pulley speed is more than 500 rpm | • Harness or connectors (Primary speed sensor circuit is open or shorted.)<br>• Primary speed sensor |

### DTC CONFIRMATION PROCEDURE

**CAUTION:**

**Always drive vehicle at a safe speed.**

#### 1. PRECONDITIONING

Immediately after performing any “DTC CONFIRMATION PROCEDURE”, always turn ignition switch OFF. Then wait at least 10 seconds before performing the next test.

>> GO TO 2.

#### 2. PERFORM DTC CONFIRMATION PROCEDURE

With CONSULT

1. Start the engine.
2. Select “Data Monitor” in “TRANSMISSION”.
3. Select “SEC SPEED” and “VEHICLE SPEED”.
4. Drive the vehicle.
5. Maintain the following conditions for 5 seconds or more.

| | |
|---|---|
| SEC SPEED | : More than 500 rpm |
| VEHICLE SPEED | : More than 10 km/h (7 MPH) |

6. Stop the vehicle.
7. Select “Self Diagnostic Results” in “TRANSMISSION”.

With GST

Follow the procedure “With CONSULT”.

Is “P0715” detected?

YES >> Go to TM-116, "Diagnosis Procedure".
NO >> INSPECTION END

## Diagnosis Procedure

INFOID:0000000009948967

#### 1. CHECK PRIMARY SPEED SENSOR POWER CIRCUIT

1. Turn ignition switch OFF.
2. Disconnect primary speed sensor connector.
3. Turn ignition switch ON.
4. Check voltage between primary speed sensor vehicle side harness connector terminal and ground.

| Primary speed sensor vehicle side harness connector | | Ground | Voltage (Approx.) |
|---|---|---|---|
| Connector | Terminal | | |
| F55 | 3 | | Battery voltage |

Is the inspection result normal?

YES >> GO TO 2.
NO >> GO TO 6.

## 2. CHECK TCM INPUT SIGNAL

1. Turn ignition switch OFF.
2. Connect primary speed sensor connector.
3. Lift the vehicle.
4. Start the engine.
5. Check frequency of primary speed sensor.

| TCM connector | | | Condition | Data (Approx.) |
|---|---|---|---|---|
| Connector | Terminal | | | |
| E19 | 38 | 42 | • Selector lever: “L” position<br>• While driving at 20 km/h (12 MPH) | 1275 Hz<br> 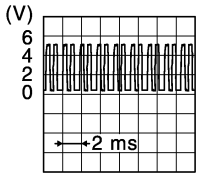 <br><br>JSDIA1306GB |

Is the inspection result normal?

YES >> GO TO 9.
NO >> GO TO 3.

## 3. CHECK HARNESS BETWEEN TCM AND PRIMARY SPEED SENSOR (PART 1)

1. Turn ignition switch OFF.
2. Disconnect TCM connector and primary speed sensor connector.
3. Check continuity between TCM vehicle side harness connector terminal and primary speed sensor vehicle side harness connector terminal.

| TCM vehicle side harness connector | | Primary speed sensor vehicle side harness connector | | Continuity |
|---|---|---|---|---|
| Connector | Terminal | Connector | Terminal | |
| E19 | 38 | F55 | 2 | Existed |
| | 42 | | 1 | |

Is the inspection result normal?

YES >> GO TO 4.
NO >> Repair or replace damaged parts.

## 4. CHECK HARNESS BETWEEN TCM AND PRIMARY SPEED SENSOR (PART 2)

Check continuity between TCM vehicle side harness connector terminal and ground.

| TCM vehicle side harness connector | | Ground | Continuity |
|---|---|---|---|
| Connector | Terminal | | |
| E19 | 38 | | Not existed |
| | 42 | | |

Is the inspection result normal?

YES >> GO TO 5.
NO >> Repair or replace damaged parts.

## 5. CHECK CVT UNIT CIRCUIT

1. Disconnect CVT unit connector.
2. Check continuity between CVT unit connector terminal and ground.

| CVT unit connector | | Ground | Continuity |
|---|---|---|---|
| Connector | Terminal | | |
| F24 | 19 | | Not existed |

Is the inspection result normal?

YES >> GO TO 9.
NO >> Repair or replace damaged parts.

## 6. CHECK HARNESS BETWEEN PRIMARY SPEED SENSOR (POWER) AND IPDM E/R (PART 1)

1. Turn ignition switch OFF.
2. Disconnect IPDM E/R connector.
3. Check continuity between primary speed sensor vehicle side harness connector terminal and IPDM E/R vehicle side harness connector terminal.

| Primary speed sensor vehicle side harness connector | | IPDM E/R vehicle side harness connector | | Continuity |
|---|---|---|---|---|
| Connector | Terminal | Connector | Terminal | |
| F55 | 3 | E15 | 58 | Existed |

Is the inspection result normal?

YES >> GO TO 7.
NO >> Repair or replace damaged parts.

## 7. CHECK HARNESS BETWEEN PRIMARY SPEED SENSOR (POWER) AND IPDM E/R (PART 2)

Check continuity between primary speed sensor vehicle side harness connector terminal and ground.

| Primary speed sensor vehicle side harness connector | | Ground | Continuity |
|---|---|---|---|
| Connector | Terminal | | |
| F55 | 3 | | Not existed |

Is the inspection result normal?

YES >> GO TO 8.
NO >> Repair or replace damaged parts.

## 8. DETECT MALFUNCTIONING ITEMS

Check the following.
- IPDM E/R
- 10A fuse (No.55, located in the IPDM E/R)
- Harness for short or open between IPDM E/R and ignition switch (Refer to PG-33, "Wiring Diagram - IGNITION POWER SUPPLY -".)
- Ignition switch

Is the inspection result normal?

YES >> Check intermittent incident. Refer to GI-40, "Intermittent Incident"
NO >> Repair or replace damaged parts.

## 9. CHECK INTERMITTENT INCIDENT

Refer to GI-40, "Intermittent Incident".

Is the inspection result normal?

YES >> Replace primary speed sensor. Refer to TM-227, "Exploded View".
NO >> Repair or replace damaged parts.

# P0720 OUTPUT SPEED SENSOR

## Description

INFOID:0000000009948968

- Secondary speed sensor is installed to the upper side of converter housing.
- Secondary speed sensor detects secondary pulley speed.
- Secondary speed sensor converts secondary pulley speed to pulse signal and transmits the signal to TCM.
- TCM converts pulse signal to vehicle speed.

## DTC Logic

INFOID:0000000009948969

### DTC DETECTION LOGIC

| DTC | Trouble diagnosis name | DTC is detected if... | Possible cause |
|---|---|---|---|
| P0720 | Output Speed Sensor Circuit | • Secondary speed sensor signal is not transmitted to TCM<br>• Secondary speed sensor value is less than 150 rpm while primary pulley speed is more than 1,000 rpm | • Harness or connectors (Secondary speed sensor circuit is open or shorted.)<br>• Secondary speed sensor |

### DTC CONFIRMATION PROCEDURE

**CAUTION:**

**Always drive vehicle at a safe speed.**

#### 1. PRECONDITIONING

Immediately after performing any “DTC CONFIRMATION PROCEDURE”, always turn ignition switch OFF. Then wait at least 10 seconds before performing the next test.

>> GO TO 2.

#### 2. PERFORM DTC CONFIRMATION PROCEDURE

With CONSULT

1. Start the engine.
2. Select “Data Monitor” in “TRANSMISSION”.
3. Select “PRI SPEED” and “VEHICLE SPEED”.
4. Drive the vehicle.
5. Maintain the following conditions for 5 seconds or more.

| | |
|---|---|
| PRI SPEED | : More than 1,000 rpm |
| VEHICLE SPEED | : More than 10 km/h (7 MPH) |

6. Stop the vehicle.
7. Select “Self Diagnostic Results” in “TRANSMISSION”.

With GST

Follow the procedure “With CONSULT”.

Is “P0720” detected?

YES >> Go to TM-119, "Diagnosis Procedure".

NO >> INSPECTION END

## Diagnosis Procedure

INFOID:0000000009948970

#### 1. CHECK SECONDARY SPEED SENSOR POWER CIRCUIT

1. Turn ignition switch OFF.
2. Disconnect secondary speed sensor connector.
3. Turn ignition switch ON.
4. Check voltage between secondary speed sensor vehicle side harness connector terminal and ground.

| Secondary speed sensor vehicle side harness connector | | Ground | Voltage (Approx.) |
|---|---|---|---|
| Connector | Terminal | | |
| F19 | 3 | | Battery voltage |

Is the inspection result normal?

YES >> GO TO 2.
NO >> GO TO 5.

## 2. CHECK TCM INPUT SIGNAL

1. Turn ignition switch OFF.
2. Connect secondary speed sensor connector.
3. Lift the vehicle.
4. Start the engine.
5. Check frequency of secondary speed sensor.

| TCM connector | | | Condition | Data (Approx.) |
|---|---|---|---|---|
| Connector | Terminal | | | |
| E19 | 29 | 42 | • Selector lever: “L” position<br>• While driving at 20 km/h (12 MPH) | 570 Hz<br> 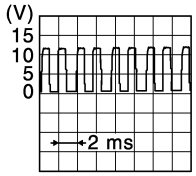 <br><br>JSDIA1305GB |

Is the inspection result normal?

YES >> GO TO 8.
NO >> GO TO 3.

## 3. CHECK HARNESS BETWEEN TCM AND SECONDARY SPEED SENSOR (PART 1)

1. Turn ignition switch OFF.
2. Disconnect TCM connector and secondary speed sensor connector.
3. Check continuity between TCM vehicle side harness connector terminals and secondary speed sensor vehicle side harness connector terminals.

| TCM vehicle side harness connector | | Secondary speed sensor vehicle side harness connector | | Continuity |
|---|---|---|---|---|
| Connector | Terminal | Connector | Terminal | |
| E19 | 29 | F19 | 2 | Existed |
| | 42 | | 1 | |

Is the inspection result normal?

YES >> GO TO 4.
NO >> Repair or replace damaged parts.

## 4. CHECK HARNESS BETWEEN TCM AND SECONDARY SPEED SENSOR (PART 2)

Check continuity between TCM vehicle side harness connector terminals and ground.

| TCM vehicle side harness connector | | Ground | Continuity |
|---|---|---|---|
| Connector | Terminal | | |
| E19 | 29 | | Not existed |
| | 42 | | |

Is the inspection result normal?

YES >> GO TO 8.
NO >> Repair or replace damaged parts.

## 5. CHECK HARNESS BETWEEN SECONDARY SPEED SENSOR (POWER) AND IPDM E/R (PART 1)

1. Turn ignition switch OFF.
2. Disconnect IPDM E/R connector.
3. Check continuity between secondary speed sensor vehicle side harness connector terminal and IPDM E/R vehicle side harness connector terminal.

| Secondary speed sensor vehicle side harness connector | | IPDM E/R vehicle side harness connector | | Continuity |
|---|---|---|---|---|
| Connector | Terminal | Connector | Terminal | |
| F19 | 3 | E15 | 58 | Existed |

Is the inspection result normal?

YES >> GO TO 6.
NO >> Repair or replace damaged parts.

## 6. CHECK HARNESS BETWEEN SECONDARY SPEED SENSOR (POWER) AND IPDM E/R (PART 2)

Check continuity between secondary speed sensor vehicle side harness connector terminal and ground.

| Secondary speed sensor vehicle side harness connector | | Ground | Continuity |
|---|---|---|---|
| Connector | Terminal | | |
| F19 | 3 | | Not existed |

Is the inspection result normal?

YES >> GO TO 7.
NO >> Repair or replace damaged parts.

## 7. DETECT MALFUNCTIONING ITEMS

Check the following.
- IPDM E/R
- 10A fuse (No.55, located in the IPDM E/R)
- Harness for short or open between IPDM E/R and ignition switch (Refer to PG-33, "Wiring Diagram - IGNITION POWER SUPPLY -".)
- Ignition switch

Is the inspection result normal?

YES >> Check intermittent incident. Refer to GI-40, "Intermittent Incident".
NO >> Repair or replace damaged parts.

## 8. CHECK INTERMITTENT INCIDENT

Refer to GI-40, "Intermittent Incident".

Is the inspection result normal?

YES >> Replace secondary speed sensor. Refer to TM-228, "Exploded View".
NO >> Repair or replace damaged parts.

# P0725 ENGINE SPEED

## Description

INFOID:0000000009948971

TCM receives engine speed signal from ECM via CAN communication.

## DTC Logic

INFOID:0000000009948972

### DTC DETECTION LOGIC

| DTC | Trouble diagnosis name | DTC is detected if... | Possible cause |
|---|---|---|---|
| P0725 | Engine Speed Input Circuit | • TCM detects a malfunction in CAN communication between TCM and ECM<br>• When primary pulley speed is more than 1,000 rpm, engine speed (CAN signal) is less than 450 rpm | • Harness or connectors<br>(CAN communication line is open or shorted.)<br>(Engine speed signal circuit is open or shorted.)<br>• ECM |

### DTC CONFIRMATION PROCEDURE

**CAUTION:**

**Always drive vehicle at a safe speed.**

#### 1. PRECONDITIONING

Immediately after performing any “DTC CONFIRMATION PROCEDURE”, always turn ignition switch OFF. Then wait at least 10 seconds before performing the next test.

>> GO TO 2.

#### 2. PERFORM DTC CONFIRMATION PROCEDURE

With CONSULT

1. Start the engine.
2. Select “Data Monitor” in “TRANSMISSION”.
3. Select “PRI SPEED SEN”.
4. Drive the vehicle.
5. Maintain the following conditions for 10 seconds or more.

| | |
|---|---|
| PRI SPEED SEN | : More than 1,000 rpm |

6. Stop the vehicle.
7. Select “Self Diagnostic Results” in “TRANSMISSION”.

Is “P0725” detected?

YES >> Go to TM-122, "Diagnosis Procedure".
NO >> INSPECTION END

## Diagnosis Procedure

INFOID:0000000009948973

#### 1. CHECK DTC WITH ECM

With CONSULT

1. Turn ignition switch ON.
2. Perform “Self Diagnostic Results” in “ENGINE”.

Is the inspection result normal?

YES >> Check intermittent incident. Refer to GI-40, "Intermittent Incident".
NO >> Check DTC detected item. Refer to TM-186, "DTC Index".

# P0740 TORQUE CONVERTER

## Description

INFOID:0000000009948974

- Torque converter clutch solenoid valve is installed to control valve.
- Torque converter clutch solenoid valve adjusts oil pump discharge pressure to an optimum level according to the driving conditions.
- The adoption of an N/L type (normal low) torque converter clutch solenoid valve enables generation of a control oil pressure when a voltage is not applied to the coil.
- Torque converter clutch solenoid valve is controlled by TCM according to signals transmitted from vehicle speed sensor and accelerator pedal position sensor.
- Lock-up is prohibited when CVT fluid temperature is low.
- When accelerator pedal is depressed (throttle opening angle is less than 2.0/8) in the lock-up state, engine speed does not suddenly change. If engine speed changes suddenly, lock-up is not applied.

## DTC Logic

INFOID:0000000009948975

### DTC DETECTION LOGIC

| DTC | Trouble diagnosis name | DTC is detected if... | Possible cause |
|---|---|---|---|
| P0740 | Torque Converter Clutch Circuit/Open | • Torque converter clutch solenoid valve monitor voltage value of TCM is less than 70% of torque converter clutch solenoid valve target voltage value<br>• Torque converter clutch solenoid valve current command value of TCM and torque converter clutch solenoid valve current monitor value is deviated | • Harness or connectors (Torque converter clutch solenoid valve circuit is open or shorted.)<br>• Torque converter clutch solenoid valve |

### DTC CONFIRMATION PROCEDURE

**CAUTION:**

**Always drive vehicle at a safe speed.**

#### 1. PRECONDITIONING (PART 1)

Immediately after performing any “DTC CONFIRMATION PROCEDURE”, always turn ignition switch OFF. Then wait at least 10 seconds before performing the next test.

>> GO TO 2.

#### 2. PRECONDITIONING (PART 2)

With CONSULT
1. Start the engine.
2. Select “Data Monitor” in “TRANSMISSION”.
3. Select “ATF TEMP SEN”.

Is “ATF TEMP SEN” value 2.17 V or less?

YES >> GO TO 3.
NO >> 1. Warm up transaxle.
2. GO TO 3.

#### 3. PERFORM DTC CONFIRMATION PROCEDURE

With CONSULT
1. Start the engine.
2. Select “Data Monitor” in “TRANSMISSION”.
3. Select “VEHICLE SPEED”.
4. Drive the vehicle.
5. Maintain the following conditions for 5 seconds or more.

VEHICLE SPEED : More than 40 km/h (25 MPH)

6. Stop the vehicle.

7. Select “Self Diagnostic Results” in “TRANSMISSION”.

With GST
Follow the procedure “With CONSULT”.

Is “P0740” detected?

YES >> Go to TM-124, "Diagnosis Procedure".
NO >> INSPECTION END

## Diagnosis Procedure

INFOID:0000000009948976

### 1. CHECK TORQUE CONVERTER CLUTCH SOLENOID VALVE CIRCUIT

1. Turn ignition switch OFF.
2. Check resistance between TCM connector terminal and ground.

| TCM connector | | Ground | Condition | Resistance (Approx.) |
|---|---|---|---|---|
| Connector | Terminal | | | |
| E18 | 3 | | CVT fluid temperature: 20°C (68°F) | 5.60 – 6.60 Ω |
| | | | CVT fluid temperature: 50°C (122°F) | 6.76 – 6.87 Ω |
| | | | CVT fluid temperature: 80°C (176°F) | 7.47 – 7.59 Ω |

Is the inspection result normal?

YES >> Check intermittent incident. Refer to GI-40, "Intermittent Incident".
NO >> GO TO 2.

### 2. CHECK TORQUE CONVERTER CLUTCH SOLENOID VALVE

1. Disconnect CVT unit connector.
2. Check torque converter clutch solenoid valve. Refer to TM-125, "Component Inspection (Torque Converter Clutch Solenoid Valve)".

Is the inspection result normal?

YES >> GO TO 3.
NO >> Torque converter clutch solenoid valve is malfunctioning. Replace transaxle assembly. Refer to TM-235, "Exploded View".

### 3. CHECK HARNESS BETWEEN TCM AND CVT UNIT (TORQUE CONVERTER CLUTCH SOLENOID VALVE) (PART 1)

1. Disconnect TCM connector.
2. Check continuity between TCM vehicle side harness connector terminal and CVT unit vehicle side harness connector terminal.

| TCM vehicle side harness connector | | CVT unit vehicle side harness connector | | Continuity |
|---|---|---|---|---|
| Connector | Terminal | Connector | Terminal | |
| E18 | 3 | F24 | 12 | Existed |

Is the inspection result normal?

YES >> GO TO 4.
NO >> Repair or replace damaged parts.

### 4. CHECK HARNESS BETWEEN TCM AND CVT UNIT (TORQUE CONVERTER CLUTCH SOLENOID VALVE) (PART 2)

Check continuity between TCM vehicle side harness connector terminal and ground.

| TCM vehicle side harness connector | | Ground | Continuity |
|---|---|---|---|
| Connector | Terminal | | |
| E18 | 3 | | Not existed |

Is the inspection result normal?

YES >> Check intermittent incident. Refer to GI-40, "Intermittent Incident".
NO >> Repair or replace damaged parts.

## Component Inspection (Torque Converter Clutch Solenoid Valve)

INFOID:0000000009948977

### 1. CHECK TORQUE CONVERTER CLUTCH SOLENOID VALVE

Check resistance between CVT unit harness connector terminal and ground.

| CVT unit harness connector | | | Condition | Resistance (Approx.) |
|---|---|---|---|---|
| Connector | Terminal | | | |
| F24 | 12 | Ground | CVT fluid temperature: 20°C (68°F) | 5.60 – 6.60 Ω |
| | | | CVT fluid temperature: 50°C (122°F) | 6.76 – 6.87 Ω |
| | | | CVT fluid temperature: 80°C (176°F) | 7.47 – 7.59 Ω |

Is the inspection result normal?

YES >> INSPECTION END

NO >> Torque converter clutch solenoid valve is malfunctioning. Replace transaxle assembly. Refer to TM-235, "Exploded View".

# P0744 TORQUE CONVERTER

## Description

INFOID:0000000009948978

- This is detected when torque converter clutch is not engaged under an electrically normal condition of torque converter clutch solenoid valve.
- This DTC is not caused by an electrical malfunction (circuit open or short) but is caused by a mechanical malfunction (control valve clogging, solenoid valve sticking, and others).

## DTC Logic

INFOID:0000000009948979

### DTC DETECTION LOGIC

| DTC | Trouble diagnosis name | DTC is detected if... | Possible cause |
|---|---|---|---|
| P0744 | Torque Converter Clutch Circuit Intermittent | Torque converter slip speed is more than a certain value (40 rpm + vehicle speed/2) while TCM is in lock-up command state | • Hydraulic control circuit<br>• Torque converter clutch solenoid valve<br>• Lock-up select solenoid valve |

### DTC CONFIRMATION PROCEDURE

**CAUTION:**

**Always drive vehicle at a safe speed.**

#### 1. PRECONDITIONING

Immediately after performing any “DTC CONFIRMATION PROCEDURE”, always turn ignition switch OFF. Then wait at least 10 seconds before performing the next test.

>> GO TO 2.

#### 2. PERFORM DTC CONFIRMATION PROCEDURE

With CONSULT

1. Start the engine.
2. Select “Data Monitor” in “TRANSMISSION”.
3. Select “RANGE”, “ATF TEMP SEN”, “ACC PEDAL OPEN” and “VEHICLE SPEED”.
4. Drive the vehicle.
5. Maintain the following conditions for 10 seconds or more.

| | |
|---|---|
| RANGE | : D |
| ATF TEMP SEN | : 2.03 V or less |
| ACC PEDAL OPEN | : 0.0/8 – 1.0/8 |
| VEHICLE SPEED | : More than 40 km/h (25 MPH) |

6. Stop the vehicle.
7. Select “Self Diagnostic Results” in “TRANSMISSION”.

With GST

Follow the procedure “With CONSULT”.

Is “P0744” detected?

YES >> Go to TM-126, "Diagnosis Procedure".
NO >> INSPECTION END

## Diagnosis Procedure

INFOID:0000000009948980

#### 1. CHECK LINE PRESSURE

Perform line pressure test. Refer to TM-209, "Inspection and Judgment".

Is the inspection result normal?

YES >> GO TO 2.
NO >> Repair or replace damaged parts. Refer to TM-209, "Inspection and Judgment".

#### 2. CHECK TORQUE CONVERTER CLUTCH SOLENOID VALVE

1. Turn ignition switch OFF.
2. Disconnect CVT unit connector.
3. Check torque converter clutch solenoid valve. Refer to TM-127, "Component Inspection (Torque Converter Clutch Solenoid Valve)".

Is the inspection result normal?

YES >> GO TO 3.
NO >> Torque converter clutch solenoid valve is malfunctioning. Replace transaxle assembly. Refer to TM-235, "Exploded View".

## 3. CHECK LOCK-UP SELECT SOLENOID VALVE

Check lock-up select solenoid valve. Refer to TM-127, "Component Inspection (Lock-up Select Solenoid Valve)".

Is the inspection result normal?

YES >> GO TO 4.
NO >> Lock-up select solenoid valve is malfunctioning. Replace transaxle assembly. Refer to TM-235, "Exploded View".

## 4. CHECK PRIMARY SPEED SENSOR SYSTEM

Check primary speed sensor system. Refer to TM-116, "DTC Logic".

Is the inspection result normal?

YES >> GO TO 5.
NO >> Repair or replace damaged parts.

## 5. CHECK SECONDARY SPEED SENSOR SYSTEM

Check secondary speed sensor system. Refer to TM-119, "DTC Logic".

Is the inspection result normal?

YES >> GO TO 6.
NO >> Repair or replace damaged parts.

## 6. CHECK INTERMITTENT INCIDENT

Refer to GI-40, "Intermittent Incident".

Is the inspection result normal?

YES >> Replace transaxle assembly. Refer to TM-235, "Exploded View".
NO >> Repair or replace damaged parts.

# Component Inspection (Torque Converter Clutch Solenoid Valve)

INFOID:0000000009948981

## 1. CHECK TORQUE CONVERTER CLUTCH SOLENOID VALVE

Check resistance between CVT unit harness connector terminal and ground.

| CVT unit harness connector | | | Condition | Resistance (Approx.) |
|---|---|---|---|---|
| Connector | Terminal | | | |
| F24 | 12 | Ground | CVT fluid temperature: 20°C (68°F) | 5.60 – 6.60 Ω |
| | | | CVT fluid temperature: 50°C (122°F) | 6.76 – 6.87 Ω |
| | | | CVT fluid temperature: 80°C (176°F) | 7.47 – 7.59 Ω |

Is the inspection result normal?

YES >> INSPECTION END
NO >> Torque converter clutch solenoid valve is malfunctioning. Replace transaxle assembly. Refer to TM-235, "Exploded View".

# Component Inspection (Lock-up Select Solenoid Valve)

INFOID:0000000009948982

## 1. CHECK LOCK-UP SELECT SOLENOID VALVE

Check resistance between CVT unit harness connector terminal and ground.

| CVT unit harness connector | | | Condition | Resistance (Approx.) |
|---|---|---|---|---|
| Connector | Terminal | | | |
| F24 | 13 | Ground | CVT fluid temperature: 20°C (68°F) | 12.3 – 13.5 Ω |
| | | | CVT fluid temperature: 50°C (122°F) | 13.7 – 15.1 Ω |
| | | | CVT fluid temperature: 80°C (176°F) | 15.1 – 16.7 Ω |

Is the inspection result normal?

YES >> INSPECTION END

NO >> Lock-up select solenoid valve is malfunctioning. Replace transaxle assembly. Refer to TM-235, "Exploded View".

# P0745 PRESSURE CONTROL SOLENOID A

## Description

INFOID:0000000009948983

- Line pressure solenoid valve is installed to control valve.
- Line pressure solenoid valve adjusts oil pump discharge pressure to optimum level according to the driving conditions.
- The adoption of an N/H type (normal high) line pressure solenoid valve enables generation of a control oil pressure when a voltage is not applied to the coil.

## DTC Logic

INFOID:0000000009948984

### DTC DETECTION LOGIC

| DTC | Trouble diagnosis name | DTC is detected if... | Possible cause |
|---|---|---|---|
| P0745 | Pressure Control Solenoid A | • Monitor voltage value of TCM line pressure solenoid valve is less than 70% of the target voltage value of line pressure solenoid valve<br>• Current monitor value of the Line pressure solenoid valve differs from the TCM current command value of line pressure solenoid valve | • Harness or connectors (Line pressure solenoid valve circuit is open or shorted.)<br>• Line pressure solenoid valve |

### DTC CONFIRMATION PROCEDURE

**CAUTION:**

**Always drive vehicle at a safe speed.**

#### 1. PRECONDITIONING

Immediately after performing any “DTC CONFIRMATION PROCEDURE”, always turn ignition switch OFF. Then wait at least 10 seconds before performing the next test.

>> GO TO 2.

#### 2. PERFORM DTC CONFIRMATION PROCEDURE

With CONSULT

1. Start the engine.
2. Drive the vehicle for 10 seconds or more.
3. Stop the vehicle.
4. Select “Self Diagnostic Results” in “TRANSMISSION”.

With GST

Follow the procedure “With CONSULT”.

Is “P0745” detected?

YES >> Go to TM-129, "Diagnosis Procedure".

NO >> INSPECTION END

## Diagnosis Procedure

INFOID:0000000009948985

#### 1. CHECK LINE PRESSURE SOLENOID VALVE CIRCUIT

1. Turn ignition switch OFF.
2. Check resistance between TCM connector terminal and ground.

| TCM connector | | | Condition | Resistance (Approx.) |
|---|---|---|---|---|
| Connector | Terminal | | | |
| E18 | 1 | Ground | CVT fluid temperature: 20°C (68°F) | 5.60 – 6.60 Ω |
| | | | CVT fluid temperature: 50°C (122°F) | 6.76 – 6.87 Ω |
| | | | CVT fluid temperature: 80°C (176°F) | 7.47 – 7.59 Ω |

Is the inspection result normal?

YES >> Check intermittent incident. Refer to GI-40, "Intermittent Incident".
NO >> GO TO 2.

## 2. CHECK LINE PRESSURE SOLENOID VALVE

1. Disconnect CVT unit connector.
2. Check Line pressure solenoid valve. Refer to TM-130, "Component Inspection (Line Pressure Solenoid Valve)".

Is the inspection result normal?

YES >> GO TO 3.
NO >> Line pressure solenoid valve is malfunctioning. Replace transaxle assembly. Refer to TM-235, "Exploded View".

## 3. CHECK HARNESS BETWEEN TCM AND CVT UNIT (LINE PRESSURE SOLENOID VALVE) (PART 1)

1. Disconnect TCM connector.
2. Check continuity between TCM vehicle side harness connector terminal and CVT unit vehicle side harness connector terminal.

| TCM vehicle side harness connector | | CVT unit vehicle side harness connector | | Continuity |
|---|---|---|---|---|
| Connector | Terminal | Connector | Terminal | |
| E18 | 1 | F24 | 2 | Existed |

Is the inspection result normal?

YES >> GO TO 4.
NO >> Repair or replace damaged parts.

## 4. CHECK HARNESS BETWEEN TCM AND CVT UNIT (LINE PRESSURE SOLENOID VALVE) (PART 2)

Check continuity between TCM vehicle side harness connector terminal and ground.

| TCM vehicle side harness connector | | Ground | Continuity |
|---|---|---|---|
| Connector | Terminal | | |
| E18 | 1 | | Not existed |

Is the inspection result normal?

YES >> Check intermittent incident. Refer to GI-40, "Intermittent Incident".
NO >> Repair or replace damaged parts.

# Component Inspection (Line Pressure Solenoid Valve)

INFOID:0000000009948986

## 1. CHECK LINE PRESSURE SOLENOID VALVE

Check resistance between CVT unit harness connector terminal and ground.

| CVT unit harness connector | | Ground | Condition | Resistance (Approx.) |
|---|---|---|---|---|
| Connector | Terminal | | | |
| F24 | 2 | | CVT fluid temperature: 20°C (68°F) | 5.60 – 6.60 Ω |
| | | | CVT fluid temperature: 50°C (122°F) | 6.76 – 6.87 Ω |
| | | | CVT fluid temperature: 80°C (176°F) | 7.47 – 7.59 Ω |

Is the inspection result normal?

YES >> INSPECTION END
NO >> Line pressure solenoid valve is malfunctioning. Replace transaxle assembly. Refer to TM-235, "Exploded View".

# P0746 PRESSURE CONTROL SOLENOID A

## Description

INFOID:0000000009948987

- When an abnormal gear ratio is detected on the LOW side due to a low line pressure with the line pressure solenoid valve electrically normal, this phenomenon is judged as a malfunction.
- This DTC is not caused by an electrical malfunction (circuit open or short) but is caused by a mechanical malfunction (control valve clogging, solenoid valve sticking, and others).

## DTC Logic

INFOID:0000000009948988

### DTC DETECTION LOGIC

| DTC | Trouble diagnosis name | DTC is detected if... | Possible cause |
|---|---|---|---|
| P0746 | Pressure Control Solenoid A Performance/Stuck Off | TCM detects a state that gear ratio is more than 2.9 | • Line pressure control system<br>• Line pressure solenoid valve<br>• Primary speed sensor<br>• Secondary speed sensor |

### DTC CONFIRMATION PROCEDURE

**CAUTION:**

**Always drive vehicle at a safe speed.**

#### 1. PRECONDITIONING

Immediately after performing any “DTC CONFIRMATION PROCEDURE”, always turn ignition switch OFF. Then wait at least 10 seconds before performing the next test.

>> GO TO 2.

#### 2. PERFORM DTC CONFIRMATION PROCEDURE

With CONSULT

1. Start the engine.
2. Select “Data Monitor” in “TRANSMISSION”.
3. Select “ENG SPEED”, “PRI SPEED” and “VEHICLE SPEED”.
4. Drive the vehicle.
5. Maintain the following conditions for 1 seconds or more.

| | |
|---|---|
| ENG SPEED | : More than 600 rpm |
| PRI SPEED | : More than 500 rpm |
| VEHICLE SPEED | : More than 10 km/h (7 MPH) |

6. Stop the vehicle.
7. Select “Self Diagnostic Results” in “TRANSMISSION”.

With GST

Follow the procedure “With CONSULT”.

Is “P0746” detected?

YES >> Go to TM-131, "Diagnosis Procedure".

NO >> INSPECTION END

## Diagnosis Procedure

INFOID:0000000009948989

#### 1. CHECK LINE PRESSURE

Perform line pressure test. Refer to TM-209, "Inspection and Judgment".

Is the inspection result normal?

YES >> GO TO 2.

NO >> Repair or replace damaged parts. Refer to TM-209, "Inspection and Judgment".

#### 2. CHECK LINE PRESSURE SOLENOID VALVE

1. Turn ignition switch OFF.

2. Disconnect CVT unit harness connector.
3. Check line pressure solenoid valve. Refer to TM-132, "Component Inspection (Line Pressure Solenoid Valve)".

Is the inspection result normal?

YES >> GO TO 3.
NO >> Line pressure solenoid valve is malfunctioning. Replace transaxle assembly. Refer to TM-235, "Exploded View".

## 3. CHECK PRIMARY SPEED SENSOR SYSTEM

Check primary speed sensor system. Refer to TM-116, "DTC Logic".

Is the inspection result normal?

YES >> GO TO 4.
NO >> Repair or replace damaged parts.

## 4. CHECK SECONDARY SPEED SENSOR SYSTEM

Check secondary speed sensor system. Refer to TM-119, "DTC Logic".

Is the inspection result normal?

YES >> GO TO 5.
NO >> Repair or replace damaged parts.

## 5. CHECK INTERMITTENT INCIDENT

Refer to GI-40, "Intermittent Incident".

Is the inspection result normal?

YES >> Replace transaxle assembly. Refer to TM-235, "Exploded View".
NO >> Repair or replace damaged parts.

# Component Inspection (Line Pressure Solenoid Valve)

INFOID:0000000009948990

## 1. CHECK LINE PRESSURE SOLENOID VALVE

Check resistance between CVT unit harness connector terminal and ground.

| CVT unit harness connector | | Ground | Condition | Resistance (Approx.) |
|---|---|---|---|---|
| Connector | Terminal | | | |
| F24 | 2 | | CVT fluid temperature: 20°C (68°F) | 5.60 – 6.60 Ω |
| | | | CVT fluid temperature: 50°C (122°F) | 6.76 – 6.87 Ω |
| | | | CVT fluid temperature: 80°C (176°F) | 7.47 – 7.59 Ω |

Is the inspection result normal?

YES >> INSPECTION END
NO >> Line pressure solenoid valve is malfunctioning. Replace transaxle assembly. Refer to TM-235, "Exploded View".

# P0776 PRESSURE CONTROL SOLENOID B

## Description

INFOID:0000000009948991

- This is detected when secondary pressure solenoid valve is electrically normal and secondary pressure is low.
- This DTC is not caused by an electrical malfunction (circuit open or short) but is caused by a mechanical malfunction (control valve clogging, solenoid valve sticking, and others).

## DTC Logic

INFOID:0000000009948992

### DTC DETECTION LOGIC

| DTC | Trouble diagnosis name | DTC is detected if... | Possible cause |
|---|---|---|---|
| P0776 | Pressure Control Solenoid B Performance/Stuck Off | Difference of secondary pressure target value of TCM and secondary pressure actual value is more than 1.2 MPa | • Secondary pressure solenoid valve system<br>• Line pressure control system<br>• Secondary pressure solenoid valve<br>• Secondary pressure sensor |

### DTC CONFIRMATION PROCEDURE

**CAUTION:**
**Always drive vehicle at a safe speed.**

#### 1. PRECONDITIONING

Immediately after performing any “DTC CONFIRMATION PROCEDURE”, always turn ignition switch OFF. Then wait at least 10 seconds before performing the next test.

>> GO TO 2.

#### 2. PERFORM DTC CONFIRMATION PROCEDURE

With CONSULT
1. Start the engine.
2. Select “Data Monitor” in “TRANSMISSION”.
3. Select “RANGE”, “VIGN SEN”, “ATF TEMP SEN”, “ACC PEDAL OPEN” and “VEHICLE SPEED”.
4. Drive the vehicle.
5. Maintain the following conditions for 30 seconds or more.

| | |
|---|---|
| RANGE | : D |
| VIGN SEN | : More than 10 V |
| ATF TEMP SEN | : 2.03 – 0.16 V |
| ACC PEDAL OPEN | : More than 1.0/8 |
| VEHICLE SPEED | : More than 10 km/h (7 MPH) |

6. Stop the vehicle.
7. Select “Self Diagnostic Results” in “TRANSMISSION”.

With GST
Follow the procedure “With CONSULT”.

Is “P0776” detected?

YES >> Go to TM-133, "Diagnosis Procedure".
NO >> INSPECTION END

## Diagnosis Procedure

INFOID:0000000009948993

#### 1. CHECK LINE PRESSURE

Perform line pressure test. Refer to TM-209, "Inspection and Judgment".

Is the inspection result normal?

YES >> GO TO 2.

NO >> Repair or replace damaged parts. Refer to TM-209, "Inspection and Judgment".

## 2. CHECK SECONDARY PRESSURE SOLENOID VALVE

1. Turn ignition switch OFF.
2. Disconnect CVT unit harness connector.
3. Check secondary pressure solenoid valve. Refer to TM-134, "Component Inspection (Secondary Pressure Solenoid Valve)".

Is the inspection result normal?

YES >> GO TO 3.
NO >> Secondary pressure solenoid valve is malfunctioning. Replace transaxle assembly. Refer to TM-235, "Exploded View"

## 3. CHECK SECONDARY PRESSURE SENSOR SYSTEM

Check secondary pressure sensor system. Refer to TM-137, "DTC Logic".

Is the inspection result normal?

YES >> GO TO 4.
NO >> Repair or replace damaged parts.

## 4. CHECK INTERMITTENT INCIDENT

Refer to GI-40, "Intermittent Incident".

Is the inspection result normal?

YES >> Replace transaxle assembly. Refer to TM-235, "Exploded View".
NO >> Repair or replace damaged parts.

# Component Inspection (Secondary Pressure Solenoid Valve)

INFOID:0000000009948994

## 1. CHECK SECONDARY PRESSURE SOLENOID VALVE

Check resistance between CVT unit harness connector terminal and ground.

| CVT unit harness connector | | | Condition | Resistance (Approx.) |
|---|---|---|---|---|
| Connector | Terminal | | | |
| F24 | 3 | Ground | CVT fluid temperature: 20°C (68°F) | 5.60 – 6.60 Ω |
| | | | CVT fluid temperature: 50°C (122°F) | 6.76 – 6.87 Ω |
| | | | CVT fluid temperature: 80°C (176°F) | 7.47 – 7.59 Ω |

Is the inspection result normal?

YES >> INSPECTION END
NO >> Secondary pressure solenoid valve is malfunctioning. Replace transaxle assembly. Refer to TM-235, "Exploded View".

# P0778 PRESSURE CONTROL SOLENOID B

## Description

INFOID:0000000009948995

- Secondary pressure solenoid valve is installed to control valve.
- Secondary pressure solenoid valve adjusts oil pump discharge pressure to optimum level according to the driving conditions.
- The adoption of an N/H type (normal high) secondary pressure solenoid valve enables generation of a control oil pressure when a voltage is not applied to the coil.

## DTC Logic

INFOID:0000000009948996

### DTC DETECTION LOGIC

| DTC | Trouble diagnosis name | DTC is detected if... | Possible cause |
|---|---|---|---|
| P0778 | Pressure Control Solenoid B Electrical | • Current monitor value of the secondary pressure solenoid valve differs from the TCM current command value of secondary pressure solenoid valve<br>• Secondary pressure solenoid valve current command value of TCM and secondary pressure solenoid valve current monitor value is deviated | • Harness or connectors (secondary pressure solenoid valve circuit is open or shorted.)<br>• Secondary pressure solenoid valve |

### DTC CONFIRMATION PROCEDURE

**CAUTION:**

**Always drive vehicle at a safe speed.**

#### 1. PRECONDITIONING

Immediately after performing any “DTC CONFIRMATION PROCEDURE”, always turn ignition switch OFF. Then wait at least 10 seconds before performing the next test.

>> GO TO 2.

#### 2. PERFORM DTC CONFIRMATION PROCEDURE

With CONSULT

1. Start the engine.
2. Drive the vehicle for 10 seconds or more.
3. Stop the vehicle.
4. Select “Self Diagnostic Results” in “TRANSMISSION”.

With GST

Follow the procedure “With CONSULT”.

Is “P0778” detected?

YES >> Go to TM-135, "Diagnosis Procedure".

NO >> INSPECTION END

## Diagnosis Procedure

INFOID:0000000009948997

#### 1. CHECK SECONDARY PRESSURE SOLENOID VALVE CIRCUIT

1. Turn ignition switch OFF.
2. Check resistance between TCM connector terminal and ground.

| TCM connector | | | Condition | Resistance (Approx.) |
|---|---|---|---|---|
| Connector | Terminal | | | |
| E18 | 2 | Ground | CVT fluid temperature: 20°C (68°F) | 5.60 – 6.60 Ω |
| | | | CVT fluid temperature: 50°C (122°F) | 6.76 – 6.87 Ω |
| | | | CVT fluid temperature: 80°C (176°F) | 7.47 – 7.59 Ω |

Is the inspection result normal?

YES >> Check intermittent incident. Refer to GI-40, "Intermittent Incident".
NO >> GO TO 2.

## 2. CHECK SECONDARY PRESSURE SOLENOID VALVE

1. Disconnect CVT unit harness connector.
2. Check secondary pressure solenoid valve. Refer to TM-136, "Component Inspection (Secondary Pressure Solenoid Valve)".

Is the inspection result normal?

YES >> GO TO 3.
NO >> Secondary pressure solenoid valve is malfunctioning. Replace transaxle assembly. Refer to TM-235, "Exploded View".

## 3. CHECK HARNESS BETWEEN TCM AND CVT UNIT SECONDARY PRESSURE SOLENOID VALVE) (PART 1)

1. Disconnect TCM connector.
2. Check continuity between TCM vehicle side harness connector terminal and CVT unit vehicle side harness connector terminal.

| TCM vehicle side harness connector | | CVT unit vehicle side harness connector | | Continuity |
|---|---|---|---|---|
| Connector | Terminal | Connector | Terminal | |
| E18 | 2 | F24 | 3 | Existed |

Is the inspection result normal?

YES >> GO TO 4.
NO >> Repair or replace damaged parts.

## 4. CHECK HARNESS BETWEEN TCM AND CVT UNIT (SECONDARY PRESSURE SOLENOID VALVE) (PART 2)

Check continuity between TCM vehicle side harness connector terminal and ground.

| TCM vehicle side harness connector | | Ground | Continuity |
|---|---|---|---|
| Connector | Terminal | | |
| E18 | 2 | | Not existed |

Is the inspection result normal?

YES >> Check intermittent incident. Refer to GI-40, "Intermittent Incident".
NO >> Repair or replace damaged parts.

# Component Inspection (Secondary Pressure Solenoid Valve)

INFOID:0000000009948998

## 1. CHECK SECONDARY PRESSURE SOLENOID VALVE

Check resistance between CVT unit harness connector terminal and ground.

| CVT unit harness connector | | Ground | Condition | Resistance (Approx.) |
|---|---|---|---|---|
| Connector | Terminal | | | |
| F24 | 3 | | CVT fluid temperature: 20°C (68°F) | 5.60 – 6.60 Ω |
| | | | CVT fluid temperature: 50°C (122°F) | 6.76 – 6.87 Ω |
| | | | CVT fluid temperature: 80°C (176°F) | 7.47 – 7.59 Ω |

Is the inspection result normal?

YES >> INSPECTION END
NO >> Secondary pressure solenoid valve is malfunctioning. Replace transaxle assembly. Refer to TM-235, "Exploded View".

# P0840 TRANSMISSION FLUID PRESSURE SEN/SW A

## Description

INFOID:0000000009948999

- Secondary pressure sensor is installed to control valve.
- Secondary pressure sensor detects pressure that is applied to secondary pulley.
- Secondary pressure sensor converts pressure that is applied to secondary pulley to output voltage and transmits the signal to TCM.
- Secondary pressure sensor changes voltage according to pressure change. The voltage increases as the pressure increases.

## DTC Logic

INFOID:0000000009949000

### DTC DETECTION LOGIC

| DTC | Trouble diagnosis name | DTC is detected if... | Possible cause |
|---|---|---|---|
| P0840 | Transmission Fluid Pressure Sensor/Switch A Circuit | • Secondary pressure sensor voltage that TCM receives is more than 4.7 V<br>• Secondary pressure sensor voltage that TCM receives is less than 0.9 V | • Harness or connectors (Secondary pressure sensor circuit is open or shorted.)<br>• Secondary pressure sensor |

### DTC CONFIRMATION PROCEDURE

#### 1. PRECONDITIONING

Immediately after performing any “DTC CONFIRMATION PROCEDURE”, always turn ignition switch OFF. Then wait at least 10 seconds before performing the next test.

>> GO TO 2.

#### 2. PERFORM DTC CONFIRMATION PROCEDURE

With CONSULT
1. Start the engine.
2. Select “Data Monitor” in “TRANSMISSION”.
3. Select “ATF TEMP SEN”.
4. Maintain the following conditions for 5 seconds or more.

ATF TEMP SEN : 2.41 V or less

5. Select “Self Diagnostic Results” in “TRANSMISSION”.

With GST
Follow the procedure “With CONSULT”.

Is “P0840” detected?

YES >> Go to TM-137, "Diagnosis Procedure".
NO >> INSPECTION END

## Diagnosis Procedure

INFOID:0000000009949001

#### 1. CHECK TCM INPUT SIGNAL

1. Turn ignition switch OFF.
2. Start the engine.
3. Check voltage between TCM vehicle side harness connector terminals.

| TCM connector | | | Condition | Voltage (Approx.) |
|---|---|---|---|---|
| Connector | Terminal | | | |
| E19 | 37 | 42 | • Selector lever: “N” position<br>• Idle speed | 0.8 V |

Is the inspection result normal?

YES >> Check intermittent incident. Refer to GI-40, "Intermittent Incident".

NO >> GO TO 2.

## 2. CHECK POWER AND SENSOR GROUND

1. Turn ignition switch OFF.
2. Check voltage between TCM vehicle side harness connector terminals.

| TCM connector | | | Condition | Voltage (Approx.) |
|---|---|---|---|---|
| Connector | Terminal | | | |
| E19 | 42 | 46 | Ignition switch: ON | 5.0 V |
| | | | Ignition switch: OFF | 0 V |

Is the inspection result normal?

YES >> GO TO 3.
NO >> Go to TM-144, "Diagnosis Procedure".

## 3. CHECK HARNESS BETWEEN TCM AND CVT UNIT (SECONDARY PRESSURE SENSOR) (PART 1)

1. Turn ignition switch OFF.
2. Disconnect TCM connector and CVT unit harness connector.
3. Check continuity between TCM vehicle side harness connector terminals and CVT unit vehicle side harness connector terminals.

| TCM vehicle side harness connector | | CVT unit vehicle side harness connector | | Continuity |
|---|---|---|---|---|
| Connector | Terminal | Connector | Terminal | |
| E19 | 37 | F24 | 23 | Existed |
| | 42 | | 19 | |
| | 46 | | 20 | |

Is the inspection result normal?

YES >> GO TO 4.
NO >> Repair or replace damaged parts.

## 4. CHECK HARNESS BETWEEN TCM AND CVT UNIT (SECONDARY PRESSURE SENSOR) (PART 2)

Check continuity between TCM vehicle side harness connector terminals and ground.

| TCM vehicle side harness connector | | Ground | Continuity |
|---|---|---|---|
| Connector | Terminal | | |
| E19 | 37 | | Not existed |
| | 42 | | |
| | 46 | | |

Is the inspection result normal?

YES >> GO TO 5.
NO >> Repair or replace damaged parts.

## 5. CHECK INTERMITTENT INCIDENT

Refer to GI-40, "Intermittent Incident".

Is the inspection result normal?

YES >> Replace transaxle assembly. Refer to TM-235, "Exploded View".
NO >> Repair or replace damaged parts.

# P0841 TRANSMISSION FLUID PRESSURE SEN/SW A

## Description

INFOID:0000000009949002

A malfunction of oil pressure sensor function is detected by mutual monitoring between secondary pressure sensor and line pressure.

## DTC Logic

INFOID:0000000009949003

### DTC DETECTION LOGIC

| DTC | Trouble diagnosis name | DTC is detected if... | Possible cause |
|---|---|---|---|
| P0841 | Transmission Fluid Pressure Sensor/Switch A Circuit Range/Performance | Secondary pressure sensor value exceeds line pressure value | • Harness or connectors (secondary pressure sensor circuit is open or shorted.)<br>• Secondary pressure sensor |

### DTC CONFIRMATION PROCEDURE

**1.** PRECONDITIONING

Immediately after performing any “DTC CONFIRMATION PROCEDURE”, always turn ignition switch OFF. Then wait at least 10 seconds before performing the next test.

>> GO TO 2.

**2.** PERFORM DTC CONFIRMATION PROCEDURE

With CONSULT
1. Start the engine.
2. Select “Data Monitor” in “TRANSMISSION”.
3. Select “VEHICLE SPEED”.
4. Drive the vehicle.
5. Maintain the following conditions for 5 seconds or more.

VEHICLE SPEED : More than 30 km/h (19 MPH)

6. Stop the vehicle.
7. Select “Self Diagnostic Results” in “TRANSMISSION”.

Is “P0841” detected?

YES >> Go to TM-139, "Diagnosis Procedure".
NO >> INSPECTION END

## Diagnosis Procedure

INFOID:0000000009949004

**1.** CHECK LINE PRESSURE

Perform line pressure test. Refer to TM-209, "Inspection and Judgment".

Is the inspection result normal?

YES >> GO TO 2.
NO >> Repair or replace damaged parts. Refer to TM-209, "Inspection and Judgment".

**2.** CHECK SECONDARY PRESSURE SENSOR SYSTEM

Check secondary pressure sensor system. Refer to TM-137, "DTC Logic".

Is the inspection result normal?

YES >> GO TO 3.
NO >> Repair or replace damaged parts.

**3.** CHECK SECONDARY PRESSURE SOLENOID VALVE

Check line pressure solenoid valve. Refer to TM-140, "Component Inspection (Line Pressure Solenoid Valve)".

Is the inspection result normal?

YES >> GO TO 4.
NO >> Line pressure solenoid valve is malfunctioning. Replace transaxle assembly. Refer to TM-235, "Exploded View".

## 4. CHECK SECONDARY PRESSURE SOLENOID VALVE

Check secondary pressure solenoid valve. Refer to TM-140, "Component Inspection (Secondary Pressure Solenoid Valve)".

Is the inspection result normal?

YES >> GO TO 5.
NO >> Secondary pressure solenoid valve is malfunctioning. Replace transaxle assembly. Refer to TM-235, "Exploded View".

## 5. CHECK STEP MOTOR SYSTEM

Check step motor system. Refer to TM-157, "DTC Logic".

Is the inspection result normal?

YES >> GO TO 6.
NO >> Repair or replace damaged parts.

## 6. CHECK INTERMITTENT INCIDENT

Refer to GI-40, "Intermittent Incident".

Is the inspection result normal?

YES >> Replace transaxle assembly. Refer to TM-235, "Exploded View".
NO >> Repair or replace damaged parts.

# Component Inspection (Line Pressure Solenoid Valve)

INFOID:0000000009949005

## 1. CHECK LINE PRESSURE SOLENOID VALVE

Check resistance between CVT unit harness connector terminal and ground.

| CVT unit harness connector | | Ground | Condition | Resistance (Approx.) |
|---|---|---|---|---|
| Connector | Terminal | | | |
| F24 | 2 | | CVT fluid temperature: 20°C (68°F) | 5.60 – 6.60 Ω |
| | | | CVT fluid temperature: 50°C (122°F) | 6.76 – 6.87 Ω |
| | | | CVT fluid temperature: 80°C (176°F) | 7.47 – 7.59 Ω |

Is the inspection result normal?

YES >> INSPECTION END
NO >> Line pressure solenoid valve is malfunctioning. Replace transaxle assembly. Refer to TM-235, "Exploded View".

# Component Inspection (Secondary Pressure Solenoid Valve)

INFOID:0000000009949006

## 1. CHECK SECONDARY PRESSURE SOLENOID VALVE

Check resistance between CVT unit harness connector terminal and ground.

| CVT unit harness connector | | Ground | Condition | Resistance (Approx.) |
|---|---|---|---|---|
| Connector | Terminal | | | |
| F24 | 3 | | CVT fluid temperature: 20°C (68°F) | 5.60 – 6.60 Ω |
| | | | CVT fluid temperature: 50°C (122°F) | 6.76 – 6.87 Ω |
| | | | CVT fluid temperature: 80°C (176°F) | 7.47 – 7.59 Ω |

Is the inspection result normal?

YES >> INSPECTION END
NO >> Secondary pressure solenoid valve is malfunctioning. Replace transaxle assembly. Refer to TM-235, "Exploded View".

# P0868 TRANSMISSION FLUID PRESSURE

## Description

INFOID:0000000009949007

Secondary pressure solenoid valve regulates the secondary pressure to suit the driving condition in response to a signal sent from the TCM.

## DTC Logic

INFOID:0000000009949008

### DTC DETECTION LOGIC

| DTC | Trouble diagnosis name | DTC is detected if... | Possible cause |
|---|---|---|---|
| P0868 | Transmission Fluid Pressure Low | TCM detects that secondary pressure is excessively low against target secondary pressure while the vehicle is in ordinary driving | • Harness or connectors (Sensor circuit is open or shorted.)<br>• Secondary pressure solenoid valve system<br>• Line pressure control system<br>• Secondary pressure sensor |

### DTC CONFIRMATION PROCEDURE

**CAUTION:**

**Always drive vehicle at a safe speed.**

#### 1. PRECONDITIONING

Immediately after performing any “DTC CONFIRMATION PROCEDURE”, always turn ignition switch OFF. Then wait at least 10 seconds before performing the next test.

>> GO TO 2.

#### 2. PERFORM DTC CONFIRMATION PROCEDURE

With CONSULT

1. Start the engine.
2. Select “Data Monitor” in “TRANSMISSION”.
3. Select “RANGE”, “ATF TEMP SEN”, “ACC PEDAL OPEN”, “BRAKESW” and “VEHICLE SPEED”.
4. Drive the vehicle.
5. Maintain the following conditions for 30 seconds or more.

| | |
|---|---|
| RANGE | : D |
| ATF TEMP SEN | : 2.41 V or less |
| ACC PEDAL OPEN | : 0.5/8 – 1.0/8 |
| BRAKESW | : Off |
| VEHICLE SPEED | : More than 40 km/h (25 MPH) |

6. Stop the vehicle.
7. Select “Self Diagnostic Results” in “TRANSMISSION”.

Is “P0868” detected?

YES >> Go to TM-141, "Diagnosis Procedure".
NO >> INSPECTION END

## Diagnosis Procedure

INFOID:0000000009949009

#### 1. CHECK LINE PRESSURE

Perform line pressure test. Refer to TM-209, "Inspection and Judgment".

Is the inspection result normal?

YES >> GO TO 2.
NO >> Repair or replace damaged parts. Refer to TM-209, "Inspection and Judgment".

#### 2. CHECK LINE PRESSURE SOLENOID VALVE

1. Turn ignition switch OFF.

2. Disconnect CVT unit harness connector.
3. Check line pressure solenoid valve. Refer to TM-142, "Component Inspection (Line Pressure Solenoid Valve)".

Is the inspection result normal?

YES >> GO TO 3.
NO >> Line pressure solenoid valve is malfunctioning. Replace transaxle assembly. Refer to TM-235, "Exploded View".

## 3. CHECK SECONDARY PRESSURE SOLENOID VALVE

Check secondary pressure solenoid valve. Refer to TM-142, "Component Inspection (Secondary Pressure Solenoid Valve)".

Is the inspection result normal?

YES >> GO TO 4.
NO >> Secondary pressure solenoid valve is malfunctioning. Replace transaxle assembly. Refer to TM-235, "Exploded View".

## 4. CHECK SECONDARY PRESSURE SENSOR SYSTEM

Check secondary pressure sensor system. Refer to TM-137, "DTC Logic".

Is the inspection result normal?

YES >> GO TO 5.
NO >> Repair or replace damaged parts.

## 5. CHECK INTERMITTENT INCIDENT

Refer to GI-40, "Intermittent Incident".

Is the inspection result normal?

YES >> Replace transaxle assembly. Refer to TM-235, "Exploded View".
NO >> Repair or replace damaged parts.

# Component Inspection (Line Pressure Solenoid Valve)

INFOID:0000000009949010

## 1. CHECK LINE PRESSURE SOLENOID VALVE

Check resistance between CVT unit harness connector terminal and ground.

| CVT unit harness connector | | | Condition | Resistance (Approx.) |
|---|---|---|---|---|
| Connector | Terminal | | | |
| F24 | 2 | Ground | CVT fluid temperature: 20°C (68°F) | 5.60 – 6.60 Ω |
| | | | CVT fluid temperature: 50°C (122F) | 6.76 – 6.87 Ω |
| | | | CVT fluid temperature: 80°C (176°F) | 7.47 – 7.59 Ω |

Is the inspection result normal?

YES >> INSPECTION END
NO >> Line pressure solenoid valve is malfunctioning. Replace transaxle assembly. Refer to TM-235, "Exploded View".

# Component Inspection (Secondary Pressure Solenoid Valve)

INFOID:0000000009949011

## 1. CHECK SECONDARY PRESSURE SOLENOID VALVE

Check resistance between CVT unit harness connector terminal and ground.

| CVT unit harness connector | | | Condition | Resistance (Approx.) |
|---|---|---|---|---|
| Connector | Terminal | | | |
| F24 | 3 | Ground | CVT fluid temperature: 20°C (68°F) | 5.60 – 6.60 Ω |
| | | | CVT fluid temperature: 50°C (122°F) | 6.76 – 6.87 Ω |
| | | | CVT fluid temperature: 80°C (176°F) | 7.47 – 7.59 Ω |

Is the inspection result normal?

YES >> INSPECTION END
NO >> Secondary pressure solenoid valve is malfunctioning. Replace transaxle assembly. Refer to TM-235, "Exploded View".

# P1701 TCM

## Description

INFOID:0000000009949012

This malfunction is detected when power (backup) is not supplied to TCM and the learning function stops.

**CAUTION:**

**Immediately after TCM is replaced or after control valve or transaxle assembly is replaced (after TCM initialization is complete), self-diagnosis result of "P1701" may be displayed. In this case, erase self-diagnosis result using CONSULT. After erasing self-diagnosis, perform reproduction procedures of DTC P1701 and check that a malfunction is not detected.**

## DTC Logic

INFOID:0000000009949013

### DTC DETECTION LOGIC

| DTC | Trouble diagnosis name | DTC is detected if... | Possible cause |
|---|---|---|---|
| P1701 | Power Supply Circuit | Power supply (backup) of TCM is not supplied and learning function stops | Harness or connectors<br>(TCM power source circuit is open or shorted.) |

### DTC CONFIRMATION PROCEDURE

**CAUTION:**

**Always drive vehicle at a safe speed.**

#### 1. PRECONDITIONING

Immediately after performing any "DTC CONFIRMATION PROCEDURE", always turn ignition switch OFF. Then wait at least 10 seconds before performing the next test.

>> GO TO 2.

#### 2. PERFORM DTC CONFIRMATION PROCEDURE

With CONSULT

1. Start the engine.
2. Maintain idling state for 10 seconds or more.
3. Drive the vehicle for 10 seconds or more.
4. Stop the vehicle.
5. Turn ignition switch OFF.
6. Wait for 2 seconds or more.
7. Start the engine.
8. Select "Self Diagnostic Results" in "TRANSMISSION".

Is "P1701" detected?

YES >> Go to TM-144, "Diagnosis Procedure".
NO >> INSPECTION END

## Diagnosis Procedure

INFOID:0000000009949014

#### 1. CHECK TCM POWER CIRCUIT (PART 1)

1. Turn ignition switch OFF.
2. Disconnect TCM connector.
3. Turn ignition switch ON.
4. Check voltage between TCM vehicle side harness connector terminals and ground.

| TCM vehicle side harness connector | | Ground | Condition | Voltage (Approx.) |
|---|---|---|---|---|
| Connector | Terminal | | | |
| E18 | 10 | | Ignition switch: ON | Battery voltage |
| | | | Ignition switch: OFF | 0 V |
| | 19 | | Ignition switch: ON | Battery voltage |
| | | | Ignition switch: OFF | 0 V |

Is the inspection result normal?

YES >> GO TO 2.
NO >> GO TO 3.

## 2. CHECK TCM POWER CIRCUIT (PART 2)

1. Turn ignition switch OFF.
2. Check voltage between TCM vehicle side harness connector terminal and ground.

| TCM vehicle side harness connector | | Ground | Condition | Voltage (Approx.) |
|---|---|---|---|---|
| Connector | Terminal | | | |
| E19 | 28 | | Always | Battery voltage |

Is the inspection result normal?

YES >> GO TO 9.
NO >> GO TO 6.

## 3. CHECK HARNESS BETWEEN TCM AND IPDM E/R (PART 1)

1. Turn ignition switch OFF.
2. Disconnect IPDM E/R connector.
3. Check continuity between TCM vehicle side harness connector terminals and IPDM E/R vehicle side harness connector terminal.

| TCM vehicle side harness connector | | IPDM E/R vehicle side harness connector | | Continuity |
|---|---|---|---|---|
| Connector | Terminal | Connector | Terminal | |
| E18 | 10 | E15 | 58 | Existed |
| | 19 | | | |

Is the inspection result normal?

YES >> GO TO 4.
NO >> Repair or replace damaged parts.

## 4. CHECK HARNESS BETWEEN TCM AND IPDM E/R (PART 2)

Check continuity between TCM vehicle side harness connector terminal and ground.

| TCM vehicle side harness connector | | Ground | Continuity |
|---|---|---|---|
| Connector | Terminal | | |
| E18 | 10 | | Not existed |
| | 19 | | |

Is the inspection result normal?

YES >> GO TO 5.
NO >> Repair or replace damaged parts.

## 5. DETECT MALFUNCTIONING ITEMS

Check the following.
- IPDM E/R
- 10A fuse (No.55, located in the IPDM E/R)
- Harness for short or open between IPDM E/R and ignition switch (Refer to PG-33, "Wiring Diagram - IGNITION POWER SUPPLY -".)
- Ignition switch

Is the inspection result normal?

YES >> Check intermittent incident. Refer to GI-40, "Intermittent Incident".
NO >> Repair or replace damaged parts.

## 6. CHECK HARNESS BETWEEN TCM AND IPDM E/R (PART 1)

1. Turn ignition switch OFF.
2. Disconnect IPDM E/R connector.
3. Check continuity between TCM vehicle side harness connector terminal and IPDM E/R vehicle side harness connector terminal.

| TCM vehicle side harness connector | | IPDM E/R vehicle side harness connector | | Continuity |
|---|---|---|---|---|
| Connector | Terminal | Connector | Terminal | |
| E19 | 28 | E14 | 45 | Existed |

Is the inspection result normal?

YES >> GO TO 7.
NO >> Repair or replace damaged parts.

## 7. CHECK HARNESS BETWEEN TCM AND IPDM E/R (PART 2)

Check continuity between TCM vehicle side harness connector terminal and ground.

| TCM vehicle side harness connector | | Ground | Continuity |
|---|---|---|---|
| Connector | Terminal | | |
| E19 | 28 | | Not existed |

Is the inspection result normal?

YES >> GO TO 8.
NO >> Repair or replace damaged parts.

## 8. DETECT MALFUNCTIONING ITEMS

Check the following.
- IPDM E/R
- 20A fuse (No.43, located in the IPDM E/R)
- Harness for short or open between IPDM E/R and battery (Refer to PG-6, "Wiring Diagram - BATTERY POWER SUPPLY -".)
- Battery

Is the inspection result normal?

YES >> Check intermittent incident. Refer to GI-40, "Intermittent Incident".
NO >> Repair or replace damaged parts.

## 9. CHECK HARNESS BETWEEN TCM AND GROUND

Check continuity between TCM vehicle side harness connector terminal and ground.

| TCM vehicle side harness connector | | Ground | Continuity |
|---|---|---|---|
| Connector | Terminal | | |
| E19 | 25 | | Existed |
| | 48 | | |

Is the inspection result normal?

YES >> Check intermittent incident. Refer to GI-40, "Intermittent Incident".
NO >> Repair or replace damaged parts.

# P1705 TP SENSOR

## Description

INFOID:0000000009949015

- Accelerator position sensor is installed to upper of accelerator pedal.
- Accelerator position sensor detects depressing amount of accelerator pedal.
- Accelerator position sensor converts depressing amount of accelerator pedal to voltage signal and transmits the signal to ECM.
- TCM receives throttle opening signal fro ECM via CAN communication.

## DTC Logic

INFOID:0000000009949016

### DTC DETECTION LOGIC

| DTC | Trouble diagnosis name | DTC is detected if... | Possible cause |
|---|---|---|---|
| P1705 | Accelerator Pedal Position Sensor Signal Circuit | TCM detects that difference between 2 throttle opening signals (CAN communication) from ECM is 1/8 or more | • Harness or connectors<br>(CAN communication line is open or shorted.)<br>(Accelerator pedal position signal circuit is open or shorted.)<br>• ECM |

### DTC CONFIRMATION PROCEDURE

#### 1. PRECONDITIONING

Immediately after performing any “DTC CONFIRMATION PROCEDURE”, always turn ignition switch OFF. Then wait at least 10 seconds before performing the next test.

>> GO TO 2.

#### 2. PERFORM DTC CONFIRMATION PROCEDURE

With CONSULT
1. Start the engine.
2. Apply parking brake.
3. Fully depress accelerator pedal.
4. Release accelerator pedal.
5. Select “Self Diagnostic Results” in “TRANSMISSION”.

Is “P1705” detected?

YES >> Go to TM-147, "Diagnosis Procedure".
NO >> INSPECTION END

## Diagnosis Procedure

INFOID:0000000009949017

#### 1. CHECK DTC WITH ECM

With CONSULT
1. Turn ignition switch ON.
2. Perform “Self Diagnostic Results” in “ENGINE”.

Is the inspection result normal?

YES >> Check intermittent incident. Refer to GI-40, "Intermittent Incident".
NO >> Check DTC detected item. Refer to EC-455, "DTC Index".

# P1709 INCOMPLETED DATA WRITING

## Description

INFOID:0000000009949018

When TCM does not store calibration data (individual characteristic value) of each solenoid valve that is stored in the ROM assembly (in the control valve), a malfunction is detected.

## DTC Logic

INFOID:0000000009949019

### DTC DETECTION LOGIC

| DTC | Trouble diagnosis name | DTC is detected if... | Possible cause |
|---|---|---|---|
| P1709 | Incompleted Data Writing | When TCM does not store calibration data (individual characteristic value) of each solenoid valve that is stored in the ROM assembly (in the control valve). | • Harness or connectors (ROM assembly circuit is open or shorted.)<br>• TCM<br>• ROM assembly (in the control valve) |

### DTC CONFIRMATION PROCEDURE

**NOTE:**
Immediately after performing any “DTC CONFIRMATION PROCEDURE”, always turn ignition switch OFF. Then wait at least 10 seconds before performing the next test.

**1.** CHECK DTC DETECTION

With CONSULT
1. Turn ignition switch OFF.
2. Wait for at least 10 consecutive seconds.
3. Turn ignition switch ON.
4. Perform “Self Diagnostic Results” in “TRANSMISSION”.

Is “P1709” detected?

YES >> Go to TM-148, "Diagnosis Procedure".
NO >> INSPECTION END

## Diagnosis Procedure

INFOID:0000000009949020

**1.** CHECK HARNESS BETWEEN TCM AND CVT UNIT HARNESS CONNECTOR (ROM ASSEMBLY) (PART 1)

1. Turn ignition switch OFF.
2. Disconnect TCM connector and CVT unit connector.
3. Check continuity between TCM vehicle side harness connector terminals and CVT unit vehicle side harness connector terminal.

| TCM vehicle side harness connector | | CVT unit vehicle side harness connector | | Continuity |
|---|---|---|---|---|
| Connector | Terminal | Connector | Terminal | |
| E18 | 13 | F24 | 11 | Existed |
| | 14 | | 1 | |
| | 15 | | 16 | |
| | 42 | | 19 | |
| | 46 | | 20 | |

Is the inspection result normal?

YES >> GO TO 2.
NO >> Repair or replace damaged parts.

**2.** CHECK HARNESS BETWEEN TCM AND CVT UNIT HARNESS CONNECTOR (ROM ASSEMBLY) (PART 2)

Check continuity between TCM vehicle side harness connector terminals and ground.

| TCM vehicle side harness connector | | Ground | Continuity |
|---|---|---|---|
| Connector | Terminal | | |
| E18 | 13 | Ground | Not existed |
| | 14 | | |
| | 15 | | |
| | 42 | | |
| | 46 | | |

Is the inspection result normal?

YES >> GO TO 3.
NO >> Repair or replace damaged parts.

## 3. CHECK TCM POWER SUPPLY AND GROUND CIRCUIT

Check TCM power supply and ground circuit. Refer to TM-144, "Diagnosis Procedure".

Is the inspection result normal?

YES >> GO TO 4.
NO >> Repair or replace damaged parts.

## 4. REPLACE TCM

1. Replace the TCM. Refer to TM-223, "Removal and Installation".
2. Perform “DTC CONFIRMATION PROCEDURE”. Refer to TM-148, "DTC Logic".

Is the inspection result normal?

YES >> INSPECTION END
NO >> Replace the transaxle assembly. Refer to TM-235, "Removal and Installation".

# P1722 VEHICLE SPEED

## Description

INFOID:0000000009949021

TCM receives vehicle speed signal from ABS actuator and electric unit (control unit) via CAN communication.

## DTC Logic

INFOID:0000000009949022

### DTC DETECTION LOGIC

| DTC | Trouble diagnosis name | DTC is detected if... | Possible cause |
|---|---|---|---|
| P1722 | Vehicle Speed Signal Circuit | • TCM detects a malfunction of CAN communication between ABS actuator and electric unit (control unit)<br>• When vehicle speed that TCM detects is 10 km/h (7 MPH) or more, vehicle speed signal (CAN signal) that is received from ABS actuator and electric unit (control unit) is less than 2 km/h (1 MPH)<br>• Change of vehicle speed signal (CAN communication) that TCM receives is large | • Harness or connectors<br>(CAN communication line is open or shorted.)<br>(Vehicle speed signal circuit is open or shorted.)<br>• ABS actuator and electric unit (control unit) |

### DTC CONFIRMATION PROCEDURE

**CAUTION:**

**Always drive vehicle at a safe speed.**

#### 1. PRECONDITIONING

Immediately after performing any “DTC CONFIRMATION PROCEDURE”, always turn ignition switch OFF. Then wait at least 10 seconds before performing the next test.

>> GO TO 2.

#### 2. PERFORM DTC CONFIRMATION PROCEDURE

With CONSULT

1. Start the engine.
2. Select “Data Monitor” in “TRANSMISSION”.
3. Select “VSP SENSOR”.
4. Drive the vehicle.
5. Maintain the following conditions for 5 seconds or more.

| | |
|---|---|
| VSP SENSOR | : More than 10 km/h (7 MPH) |

6. Stop the vehicle.
7. Select “Self Diagnostic Results” in “TRANSMISSION”.

Is “P1722” detected?

YES >> Go to TM-150, "Diagnosis Procedure".
NO >> INSPECTION END

## Diagnosis Procedure

INFOID:0000000009949023

#### 1. CHECK DTC WITH ABS

With CONSULT

1. Turn ignition switch ON.
2. Perform “Self Diagnostic Results” in “ABS”.

Is the inspection result normal?

YES >> Check intermittent incident. Refer to GI-40, "Intermittent Incident".
NO >> Check DTC detected item. Refer to BRC-98, "DTC Index".

# P1723 SPEED SENSOR

## Description

INFOID:0000000009949024

When noise (pulse) that is generated because of connection malfunction caused by primary speed sensor and secondary speed sensor harness and others is detected, it is judged that a malfunction occurs.

## DTC Logic

INFOID:0000000009949025

### DTC DETECTION LOGIC

**CAUTION:**
**Either “P0715” or “P0720” is displayed simultaneously.**

| DTC | Trouble diagnosis name | DTC is detected if... | Possible cause |
|---|---|---|---|
| P1723 | Speed Sensor Circuit | TCM detects that high frequency elements that are extracted from primary pulley speed and secondary pulley speed exceed a certain value | Harness or connectors<br>(Primary speed sensor circuit is open or shorted.)<br>(Secondary speed sensor circuit is open or shorted.) |

### DTC CONFIRMATION PROCEDURE

**CAUTION:**
**Always drive vehicle at a safe speed.**

#### 1. PRECONDITIONING

Immediately after performing any “DTC CONFIRMATION PROCEDURE”, always turn ignition switch OFF. Then wait at least 10 seconds before performing the next test.

>> GO TO 2.

#### 2. PERFORM DTC CONFIRMATION PROCEDURE

With CONSULT
1. Start the engine.
2. Select “Data Monitor” in “TRANSMISSION”.
3. Select “RANGE” and “VEHICLE SPEED”.
4. Drive the vehicle.
5. Maintain the following conditions for 1 seconds or more.

| | |
|---|---|
| RANGE | : D |
| VEHICLE SPEED | : More than 20 km/h (12 MPH) |

6. Stop the vehicle.
7. Select “Self Diagnostic Results” in “TRANSMISSION”.

Is “P1723” detected?

YES >> Go to TM-151, "Diagnosis Procedure".
NO >> INSPECTION END

## Diagnosis Procedure

INFOID:0000000009949026

#### 1. CHECK SECONDARY SPEED SENSOR SYSTEM

Check secondary speed sensor system. Refer to TM-119, "DTC Logic".

Is the inspection result normal?

YES >> GO TO 2.
NO >> Repair or replace damaged parts.

#### 2. CHECK PRIMARY SPEED SENSOR SYSTEM

Check primary speed sensor system. Refer to TM-116, "DTC Logic".

Is the inspection result normal?

YES >> Check intermittent incident. Refer to GI-40, "Intermittent Incident".

NO >> Repair or replace damaged parts.

# P1726 THROTTLE CONTROL SIGNAL

## Description

INFOID:0000000009949027

Electric throttle control system consists of throttle control motor, accelerator position sensor, throttle position sensor, and others. Electric throttle control system transmits signal to ECM and ECM transmits signal to TCM via CAN communication.

## DTC Logic

INFOID:0000000009949028

### DTC DETECTION LOGIC

| DTC | Trouble diagnosis name | DTC is detected if... | Possible cause |
|---|---|---|---|
| P1726 | Throttle Control Signal Circuit | TCM receives a malfunction signal of engine system from ECM | Harness or connectors<br>(Electric throttle sensor signal circuit is open or shorted.) |

### DTC CONFIRMATION PROCEDURE

#### 1. PRECONDITIONING

Immediately after performing any “DTC CONFIRMATION PROCEDURE”, always turn ignition switch OFF. Then wait at least 10 seconds before performing the next test.

>> GO TO 2.

#### 2. PERFORM DTC CONFIRMATION PROCEDURE

With CONSULT
1. Start the engine.
2. Maintain idling state for 10 seconds or more.
3. Select “Self Diagnostic Results” in “TRANSMISSION”.

Is “P1726” detected?

YES >> Go to GI-40, "Intermittent Incident".
NO >> INSPECTION END

## Diagnosis Procedure

INFOID:0000000009949029

#### 1. CHECK DTC WITH ECM

With CONSULT
1. Turn ignition switch ON.
2. Perform “Self Diagnostic Results” in “ENGINE”.

Is the inspection result normal?

YES >> Check intermittent incident. Refer to GI-40, "Intermittent Incident".
NO >> Check DTC detected item. Refer to EC-455, "DTC Index".

# P1740 SELECT SOLENOID

## Description

INFOID:0000000009949030

- Lock-up select solenoid valve is installed to control valve.
- Lock-up select solenoid valve switches among lock-up oil pressure, forward clutch oil pressure, and reverse brake oil pressure.
- Lock-up select solenoid valve is an ON/OFF solenoid valve.

## DTC Logic

INFOID:0000000009949031

### DTC DETECTION LOGIC

| DTC | Trouble diagnosis name | DTC is detected if... | Possible cause |
|---|---|---|---|
| P1740 | Lock-up Select Solenoid Valve Circuit | • Lock-up select solenoid valve monitor value is OFF when lock-up select solenoid valve command value of TCM is ON<br>• Lock-up select solenoid valve monitor value is ON when lock-up select solenoid valve command value of TCM is OFF | • Harness or connectors (Lock-up select solenoid valve circuit is open or shorted.)<br>• Lock-up select solenoid valve |

### DTC CONFIRMATION PROCEDURE

**CAUTION:**

**Always drive vehicle at a safe speed.**

#### 1. PRECONDITIONING

Immediately after performing any “DTC CONFIRMATION PROCEDURE”, always turn ignition switch OFF. Then wait at least 10 seconds before performing the next test.

>> GO TO 2.

#### 2. PERFORM DTC CONFIRMATION PROCEDURE (PART 1)

With CONSULT

1. Start the engine.
2. Select “Data Monitor” in “TRANSMISSION”.
3. Select “RANGE”.
4. Maintain the following conditions for 1 seconds or more.

| | |
|---|---|
| RANGE | : N·P |

5. Select “Self Diagnostic Results” in “TRANSMISSION”.

With GST

Follow the procedure “With CONSULT”.

Is “P1740” detected?

YES >> Go to TM-155, "Diagnosis Procedure".

NO >> GO TO 3.

#### 3. PERFORM DTC CONFIRMATION PROCEDURE (PART 2)

With CONSULT

1. Select “Data Monitor” in “TRANSMISSION”.
2. Select “RANGE”.
3. Maintain the following state for 1 second or more.

| | |
|---|---|
| RANGE | : R·D |

4. Select “Self Diagnostic Results” in “TRANSMISSION”.

With GST

Follow the procedure “With CONSULT”.

Is “P1740” detected?

YES >> Go to TM-155, "Diagnosis Procedure".

NO >> INSPECTION END

## Diagnosis Procedure

INFOID:0000000009949032

### 1. CHECK LOCK-UP SELECT SOLENOID VALVE CIRCUIT

1. Turn ignition switch OFF.
2. Check resistance between TCM connector terminal and ground.

| TCM connector | | Ground | Condition | Resistance (Approx.) |
|---|---|---|---|---|
| Connector | Terminal | | | |
| E18 | 4 | | CVT fluid temperature: 20°C (68°F) | 12.3 – 13.5 Ω |
| | | | CVT fluid temperature: 50°C (122°F) | 13.7 – 15.1 Ω |
| | | | CVT fluid temperature: 80°C (176°F) | 15.1 – 16.7 Ω |

Is the inspection result normal?

YES >> Check intermittent incident. Refer to GI-40, "Intermittent Incident".
NO >> GO TO 2.

### 2. CHECK LOCK-UP SELECT SOLENOID VALVE

1. Disconnect CVT unit harness connector.
2. Check lock-up select solenoid valve. Refer to TM-155, "Component Inspection (Lock-up Select Solenoid Valve)".

Is the inspection result normal?

YES >> GO TO 3.
NO >> Lock-up select solenoid valve is malfunctioning. Replace transaxle assembly. Refer to TM-235, "Exploded View".

### 3. CHECK HARNESS BETWEEN TCM AND CVT UNIT (LOCK-UP SELECT SOLENOID VALVE) (PART 1)

1. Disconnect TCM connector.
2. Check continuity between TCM vehicle side harness connector terminal and CVT unit vehicle side harness connector terminal.

| TCM vehicle side harness connector | | CVT unit vehicle side harness connector | | Continuity |
|---|---|---|---|---|
| Connector | Terminal | Connector | Terminal | |
| E18 | 4 | F24 | 13 | Existed |

Is the inspection result normal?

YES >> GO TO 4.
NO >> Repair or replace damaged parts.

### 4. CHECK HARNESS BETWEEN TCM AND CVT UNIT (LOCK-UP SELECT SOLENOID VALVE) (PART 2)

Check continuity between TCM vehicle side harness connector terminal and ground.

| TCM vehicle side harness connector | | Ground | Continuity |
|---|---|---|---|
| Connector | Terminal | | |
| E18 | 4 | | Not existed |

Is the inspection result normal?

YES >> Check intermittent incident. Refer to GI-40, "Intermittent Incident".
NO >> Repair or replace damaged parts.

## Component Inspection (Lock-up Select Solenoid Valve)

INFOID:0000000009949033

### 1. CHECK LOCK-UP SELECT SOLENOID VALVE

Check resistance between CVT unit harness connector terminal and ground.

| CVT unit harness connector | | | Condition | Resistance (Approx.) |
|---|---|---|---|---|
| Connector | Terminal | | | |
| F24 | 13 | Ground | CVT fluid temperature: 20°C (68°F) | 12.3 – 13.5 Ω |
| | | | CVT fluid temperature: 50°C (122°F) | 13.7 – 15.1 Ω |
| | | | CVT fluid temperature: 80°C (176°F) | 15.1 – 16.7 Ω |

Is the inspection result normal?

YES >> INSPECTION END

NO >> Lock-up select solenoid valve is malfunctioning. Replace transaxle assembly. Refer to TM-235, "Exploded View".

# P1777 STEP MOTOR

## Description

INFOID:0000000009949034

- Step motor changes step by turning 4 coils ON or OFF according to signal from TCM.
- By changing step, step motor controls outward flow and inward flow of line pressure to primary pulley, determines the primary pulley position, and controls gear ratio.

## DTC Logic

INFOID:0000000009949035

### DTC DETECTION LOGIC

| DTC | Trouble diagnosis name | DTC is detected if... | Possible cause |
|---|---|---|---|
| P1777 | Step Motor Circuit | • Step motor monitor value is OFF when step motor command value of TCM is ON<br>• Step motor monitor value is ON when step motor command value of TCM is OFF | • Harness or connectors (Step motor circuit is open or shorted.)<br>• Step motor |

### DTC CONFIRMATION PROCEDURE

#### 1. PRECONDITIONING

Immediately after performing any “DTC CONFIRMATION PROCEDURE”, always turn ignition switch OFF. Then wait at least 10 seconds before performing the next test.

>> GO TO 2.

#### 2. PERFORM DTC CONFIRMATION PROCEDURE

With CONSULT
1. Start the engine.
2. Select “Data Monitor” in “TRANSMISSION”.
3. Select “RANGE” and “VEHICLE SPEED”.
4. Maintain the following conditions for 1 seconds or more.

| | |
|---|---|
| RANGE | : D |
| VEHICLE SPEED | : More than 20 km/h (12 MPH) |

5. Stop the vehicle.
6. Select “Self Diagnostic Results” in “TRANSMISSION”.

With GST
Follow the procedure “With CONSULT”.

Is “P1777” detected?

YES >> Go to TM-157, "Diagnosis Procedure".
NO >> INSPECTION END

## Diagnosis Procedure

INFOID:0000000009949036

#### 1. CHECK STEP MOTOR CIRCUIT (PART 1)

1. Turn ignition switch OFF.
2. Disconnect TCM connector.
3. Check resistance between TCM vehicle side harness connector terminals.

| TCM vehicle side harness connector | | | Resistance (Approx.) |
|---|---|---|---|
| Connector | Terminal | | |
| E18 | 11 | 12 | 30.0 Ω |
| | 20 | 21 | |

Is the inspection result normal?

YES >> GO TO 2.
NO >> GO TO 3.

## 2. CHECK STEP MOTOR CIRCUIT (PART 2)

Check resistance between TCM vehicle side harness connector terminals and ground.

| TCM vehicle side harness connector | | | Resistance (Approx.) |
|---|---|---|---|
| Connector | Terminal | | |
| E18 | 11 | Ground | 15.0 Ω |
| | 12 | | |
| | 20 | | |
| | 21 | | |

Is the inspection result normal?

YES >> Check intermittent incident. Refer to GI-40, "Intermittent Incident".
NO >> GO TO 3.

## 3. CHECK STEP MOTOR

1. Disconnect CVT unit connector.
2. Check step motor. Refer to TM-158, "Component Inspection (Step Motor)".

Is the inspection result normal?

YES >> GO TO 4.
NO >> Step motor is malfunctioning. Replace transaxle assembly. Refer to TM-235, "Exploded View".

## 4. CHECK HARNESS BETWEEN TCM AND CVT UNIT (STEP MOTOR) (PART 1)

Check continuity between TCM vehicle side harness connector terminals and CVT unit vehicle side harness connector terminals.

| TCM vehicle side harness connector | | CVT unit vehicle side harness connector | | Continuity |
|---|---|---|---|---|
| Connector | Terminal | Connector | Terminal | |
| E18 | 11 | F24 | 6 | Existed |
| | 12 | | 7 | |
| | 20 | | 8 | |
| | 21 | | 9 | |

Is the inspection result normal?

YES >> GO TO 5.
NO >> Repair or replace damaged parts.

## 5. CHECK HARNESS BETWEEN TCM AND CVT UNIT (STEP MOTOR) (PART 2)

Check continuity between TCM vehicle side harness connector terminals and ground.

| TCM vehicle side harness connector | | | Continuity |
|---|---|---|---|
| Connector | Terminal | | |
| E18 | 11 | Ground | Not existed |
| | 12 | | |
| | 20 | | |
| | 21 | | |

Is the inspection result normal?

YES >> Check intermittent incident. Refer to GI-40, "Intermittent Incident".
NO >> Repair or replace damaged parts.

# Component Inspection (Step Motor)

INFOID:0000000009949037

## 1. CHECK STEP MOTOR (PART 1)

Check resistance between CVT unit harness connector terminals.

| CVT unit connector | | | Resistance (Approx.) |
|---|---|---|---|
| Connector | Terminal | | |
| F24 | 6 | 7 | 30.0 Ω |
| | 8 | 9 | |

Is the inspection result normal?

YES >> GO TO 2.
NO >> Step motor is malfunctioning. Replace transaxle assembly. Refer to TM-235, "Exploded View".

## 2. CHECK STEP MOTOR (PART 2)

Check resistance between CVT unit connector terminals and ground.

| CVT unit connector | | | Resistance (Approx.) |
|---|---|---|---|
| Connector | Terminal | | |
| F24 | 6 | Ground | 15.0 Ω |
| | 7 | | |
| | 8 | | |
| | 9 | | |

Is the inspection result normal?

YES >> INSPECTION END
NO >> Step motor is malfunctioning. Replace transaxle assembly. Refer to TM-235, "Exploded View".

# P1778 STEP MOTOR

## Description

INFOID:0000000009949038

- Step motor changes step by turning 4 coils ON or OFF according to signal from TCM.
- By changing step, step motor controls outward flow and inward flow of line pressure to primary pulley, determines the primary pulley position, and controls gear ratio.
- This DTC is not caused by an electrical malfunction (circuit open or short) but is caused by a mechanical malfunction (control valve clogging, solenoid valve sticking, and others).

## DTC Logic

INFOID:0000000009949039

### DTC DETECTION LOGIC

| DTC | Trouble diagnosis name | DTC is detected if... | Possible cause |
|---|---|---|---|
| P1778 | Step Motor Circuit Intermittent | TCM detects that primary speed sensor value and primary pulley speed estimated from secondary speed sensor are in a deviated state, and target pulley ratio and actual pulley ratio are in a deviated state | Step motor |

### DTC CONFIRMATION PROCEDURE

**CAUTION:**

- **Always drive vehicle at a safe speed.**
- **Before starting “DTC confirmation procedure”, check primary pulley speed and vehicle speed.**
- **It is fixed in high speed range. Go to TM-116, "Diagnosis Procedure".**

#### 1. PRECONDITIONING

Immediately after performing any “DTC CONFIRMATION PROCEDURE”, always turn ignition switch OFF. Then wait at least 10 seconds before performing the next test.

>> GO TO 2.

#### 2. PERFORM DTC CONFIRMATION PROCEDURE

With CONSULT

1. Select “Data Monitor” in “TRANSMISSION”.
2. Select “RANGE”, “ATF TEMP SEN”, “ACC PEDAL OPEN”, “PRI SPEED” and “VEHICLE SPEED”.
3. Drive the vehicle.
4. Maintain the following conditions for 5 seconds or more.

| | |
|---|---|
| RANGE | : D |
| ATF TEMP SEN | : 2.03 – 0.16 V |
| ACC PEDAL OPEN | : More than 1.0/8 |
| PRI SPEED | : More than 1,000 rpm |
| VEHICLE SPEED | : More than 10 km/h (7 MPH) |

5. Stop the vehicle.
6. Select “Self Diagnostic Results” in “TRANSMISSION”.

With GST

Follow the procedure “With CONSULT”.

Is “P1778” detected?

YES >> Go to TM-160, "Diagnosis Procedure".
NO >> INSPECTION END

## Diagnosis Procedure

INFOID:0000000009949040

#### 1. CHECK STEP MOTOR SYSTEM

Check step motor system. Refer to TM-157, "DTC Logic".

Is the inspection result normal?

YES >> GO TO 2.

NO >> Repair or replace damaged parts.

## 2. CHECK PRIMARY SPEED SENSOR SYSTEM

Check primary speed sensor system. Refer to TM-116, "DTC Logic".

Is the inspection result normal?

YES >> GO TO 3.
NO >> Repair or replace damaged parts.

## 3. CHECK SECONDARY SPEED SENSOR SYSTEM

Check secondary speed sensor system. Refer to TM-119, "DTC Logic".

Is the inspection result normal?

YES >> GO TO 4.
NO >> Repair or replace damaged parts.

## 4. CHECK INTERMITTENT INCIDENT

Refer to GI-40, "Intermittent Incident".

Is the inspection result normal?

YES >> Replace transaxle assembly. Refer to TM-235, "Exploded View".
NO >> Repair or replace damaged parts.

# OVERDRIVE CONTROL SWITCH

## Description

INFOID:0000000009949041

- The overdrive control switch is installed to the selector lever knob.
- When turning ON the overdrive control switch (OD OFF indicator lamp turns ON), the driving condition becomes overdrive OFF.
- When turning OFF the overdrive control switch (OD OFF indicator lamp turns OFF), the driving condition changes to “D” position.

## Component Function Check

INFOID:0000000009949042

### 1. CHECK OVERDRIVE CONTROL SWITCH SIGNAL

With CONSULT
1. Turn ignition switch ON.
2. Select “Data Monitor” in “TRANSMISSION”.
3. Select “SPORT MODE SW”.
4. Check display of “SPORT MODE SW”.

| Monitor item | Condition | Status |
|---|---|---|
| SPORT MODE SW | Press and hold overdrive control switch | On |
| | Other conditions | Off |

Is the inspection result normal?

YES >> INSPECTION END
NO >> Go to TM-162, "Diagnosis Procedure".

## Diagnosis Procedure

INFOID:0000000009949043

### 1. CHECK OVERDRIVE CONTROL SWITCH POWER CIRCUIT

1. Turn ignition switch OFF.
2. Disconnect CVT shift selector connector.
3. Turn ignition switch ON.
4. Check voltage between CVT shift selector vehicle side harness connector terminals.

With intelligent key system

| CVT shift selector vehicle side harness connector | | | Condition | Voltage (Approx.) |
|---|---|---|---|---|
| Connector | Terminal | | | |
| M58 | 1 | 2 | Ignition switch: ON | 5 V |
| | | | Ignition switch: OFF | 0 V |

Without intelligent key system

| CVT shift selector vehicle side harness connector | | | Condition | Voltage (Approx.) |
|---|---|---|---|---|
| Connector | Terminal | | | |
| M57 | 1 | 2 | Ignition switch: ON | 5 V |
| | | | Ignition switch: OFF | 0 V |

Is the inspection result normal?

YES >> GO TO 2.
NO >> GO TO 3.

### 2. CHECK OVERDRIVE CONTROL SWITCH

Check overdrive control switch. Refer to TM-164, "Component Inspection (Overdrive Control Switch)".

Is the inspection result normal?

YES >> Check intermittent incident. Refer to GI-40, "Intermittent Incident".
NO >> Repair or replace damaged parts.

### 3. CHECK GROUND CIRCUIT

1. Turn ignition switch OFF.
2. Check continuity between CVT shift selector vehicle side harness connector terminal and ground.

With intelligent key system

| CVT shift selector vehicle side harness connector | | Ground | Continuity |
|---|---|---|---|
| Connector | Terminal | | |
| M58 | 2 | | Existed |

Without intelligent key system

| CVT shift selector vehicle side harness connector | | Ground | Continuity |
|---|---|---|---|
| Connector | Terminal | | |
| M57 | 2 | | Existed |

Is the inspection result normal?

YES >> GO TO 4.
NO >> Repair or replace damaged parts.

## 4. CHECK HARNESS BETWEEN CVT SHIFT SELECTOR (OVERDRIVE CONTROL SWITCH) AND COMBINATION METER (PART 1)

1. Disconnect combination meter connector.
2. Check continuity between CVT shift selector vehicle side harness connector terminal and combination meter vehicle side harness connector terminal.

With intelligent key system

| CVT shift selector vehicle side harness connector | | Combination meter vehicle side harness connector | | Continuity |
|---|---|---|---|---|
| Connector | Terminal | Connector | Terminal | |
| M58 | 1 | M34 | 8 | Existed |

Without intelligent key system

| CVT shift selector vehicle side harness connector | | Combination meter vehicle side harness connector | | Continuity |
|---|---|---|---|---|
| Connector | Terminal | Connector | Terminal | |
| M57 | 1 | M34 | 8 | Existed |

Is the inspection result normal?

YES >> GO TO 5.
NO >> Repair or replace damaged parts.

## 5. CHECK HARNESS BETWEEN CVT SHIFT SELECTOR (OVERDRIVE CONTROL SWITCH) AND COMBINATION METER (PART 2)

Check continuity between CVT shift selector vehicle side harness connector terminal and ground.

With intelligent key system

| CVT shift selector vehicle side harness connector | | Ground | Continuity |
|---|---|---|---|
| Connector | Terminal | | |
| M58 | 1 | | Not existed |

Without intelligent key system

| CVT shift selector vehicle side harness connector | | Ground | Continuity |
|---|---|---|---|
| Connector | Terminal | | |
| M57 | 1 | | Not existed |

Is the inspection result normal?

YES >> GO TO 6.
NO >> Repair or replace damaged parts.

## 6. CHECK INTERMITTENT INCIDENT

Refer to GI-40, "Intermittent Incident".

Is the inspection result normal?

YES >> Check input and output signals of combination meter. Refer to MWI-48, "Reference Value".
NO >> Repair or replace damaged parts.

## Component Inspection (Overdrive Control Switch)

INFOID:0000000009949044

### 1. CHECK OVERDRIVE CONTROL SWITCH

Check continuity between CVT shift selector vehicle connector terminals.

With intelligent key system

| CVT shift selector connector | | | Condition | Continuity |
|---|---|---|---|---|
| Connector | Terminal | | | |
| M58 | 1 | 2 | Press and hold overdrive control switch | Existed |
| | | | Other conditions | Not existed |

Without intelligent key system

| CVT shift selector connector | | | Condition | Continuity |
|---|---|---|---|---|
| Connector | Terminal | | | |
| M57 | 1 | 2 | Press and hold overdrive control switch | Existed |
| | | | Other conditions | Not existed |

Is the inspection result normal?

YES >> INSPECTION END
NO >> Repair or replace damaged parts.

# SHIFT POSITION INDICATOR CIRCUIT

## Description

INFOID:0000000009949045

TCM transmits shift position signal to combination meter via CAN communication. The actual shift position is displayed on combination meter according to the signal.

## Component Function Check

INFOID:0000000009949046

### 1. CHECK SHIFT POSITION INDICATOR

1. Start the engine.
2. Shift selector lever.
3. Check that the selector lever position and shift position indicator on combination meter are equivalent.

Is the inspection result normal?

YES >> INSPECTION END
NO >> Go to TM-165, "Diagnosis Procedure".

## Diagnosis Procedure

INFOID:0000000009949047

### 1. CHECK TCM INPUT AND OUTPUT SIGNALS

With CONSULT

1. Start the engine.
2. Select “Data Monitor” in “TRANSMISSION”.
3. Select “RANGE”.
4. Shift selector lever.
5. Check that selector lever position, “RANGE” on CONSULT screen, and shift position indicator display on combination meter are identical.

Is the inspection result normal?

YES >> INSPECTION END
NO-1 (“RANGE” is changed but is not displayed on shift position indicator.)>>Select “Self Diagnostic Results” in “TRANSMISSION”.
NO-2 (“RANGE” differs from shift position indicator.)>>Select “Self Diagnostic Results” in “TRANSMISSION”.
NO-3 (Specific“RANGE” is not displayed on shift position indicator.)>>Select “Self Diagnostic Results” in “METER/M&A”.

# SHIFT LOCK SYSTEM

## Description

INFOID:0000000009949048

| Component | Function |
|---|---|
| Shift lock solenoid | It operates according to the signal from the stop lamp switch and moves the lock lever. |
| Lock lever | • It is rotated according to shift lock solenoid activation and shift lock is released.<br>• If shift lock solenoid does not activate, lock lever can be rotated when shift lock release button is pressed and shift lock is released. |
| Detent plate | It links with the selector button and restricts the selector lever movement. |
| Park position switch | It detects that the selector lever is in “P” position. |
| Shift lock release button | It moves the lock lever forcibly. |

## Wiring Diagram - SHIFT LOCK SYSTEM -

INFOID:0000000009949049

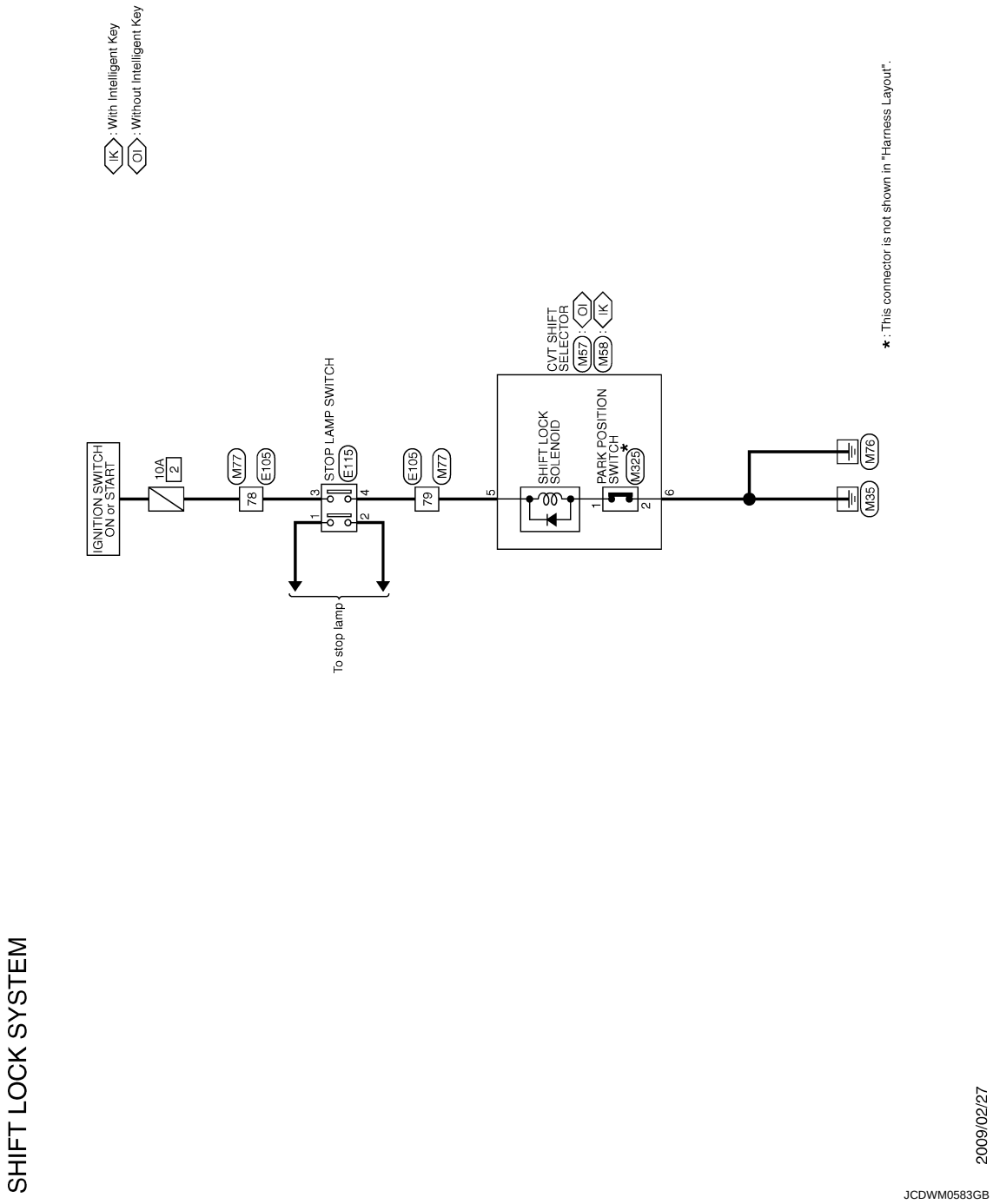

## SHIFT LOCK SYSTEM

| Connector No. | E105 |
|---|---|
| Connector Name | WIRE TO WIRE |
| Connector Type | TH80MW-CS16-TM4 |

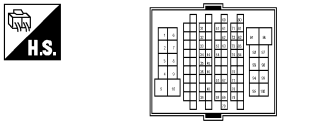

| Terminal No. | Color Of Wire | Signal Name [Specification] |
|---|---|---|
| 1 | V | - |
| 2 | W | - |
| 3 | SB | - |
| 4 | G | - |
| 5 | P | - |
| 6 | L | - [With NAVI] |
| 6 | R | - [Without NAVI] |
| 7 | Y | - |
| 8 | O | - |
| 9 | W | - |
| 10 | SB | - |
| 31 | V | - |
| 32 | R | - |
| 33 | GR | - |
| 34 | P | - |
| 35 | Y | - |
| 36 | BR | - |
| 39 | SB | - |
| 44 | R | - |
| 45 | V | - |
| 46 | P | - |
| 48 | L | - |
| 51 | B | - [With M/T] |
| 51 | BR | - [With CVT] |
| 53 | SB | - |
| 54 | O | - [With M/T] |
| 54 | W | - [With CVT] |
| 57 | LG | - |
| 59 | L | - |
| 60 | O | - |
| 61 | G | - |
| 62 | W | - |
| 63 | L | - |
| 67 | GR | - [With CVT] |
| 67 | V | - [With M/T] |
| 69 | P | - |
| 70 | SHIELD | - |
| 71 | GR | - |
| 72 | LG | - |
| 73 | P | - |
| 74 | V | - |
| 76 | Y | - |
| 77 | LG | - |
| 78 | O | - |
| 79 | G | - |
| 80 | P | - |
| 81 | L | - |
| 82 | W | - |
| 83 | BR | - |
| 84 | B | - |
| 91 | W | - |
| 92 | Y | - |
| 93 | Y | - |
| 94 | R | - |
| 95 | V | - |
| 96 | LG | - |
| 97 | R | - |
| 98 | SB | - |
| 99 | G | - |
| 100 | P | - |

| Connector No. | E115 |
|---|---|
| Connector Name | STOP LAMP SWITCH |
| Connector Type | M04FW-LC |

| Terminal No. | Color Of Wire | Signal Name [Specification] |
|---|---|---|
| 1 | V | - |
| 2 | W | - |
| 3 | O | - |
| 4 | G | - |

| Connector No. | M57 |
|---|---|
| Connector Name | CVT SHIFT SELECTOR |
| Connector Type | TH08FW-NH |

| Terminal No. | Color Of Wire | Signal Name [Specification] |
|---|---|---|
| 1 | P | - |
| 2 | B | - |
| 3 | W | - |
| 4 | B/R | - |
| 5 | LG | - |
| 6 | B | - |

| Connector No. | M58 |
|---|---|
| Connector Name | CVT SHIFT SELECTOR |
| Connector Type | TH08FW-NH |

| Terminal No. | Color Of Wire | Signal Name [Specification] |
|---|---|---|
| 1 | P | - |
| 2 | B | - |
| 3 | W | - |
| 4 | B/R | - |
| 5 | LG | - |
| 6 | B | - |
| 7 | Y/R | - |
| 8 | G/Y | - |

| Connector No. | M77 |
|---|---|
| Connector Name | WIRE TO WIRE |
| Connector Type | TH80FW-CS16-TM4 |

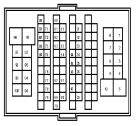

| Terminal No. | Color Of Wire | Signal Name [Specification] |
|---|---|---|
| 1 | B/O | - |
| 2 | R | - |
| 3 | G/R | - |
| 4 | G/B | - |
| 5 | L | - |
| 6 | L | - |
| 7 | W/R | - |
| 8 | G/W | - |
| 9 | Y/L | - |
| 10 | W | - |
| 31 | GR/L | - |
| 32 | L/B | - |
| 33 | R/Y | - |
| 34 | SB | - |
| 35 | BR | - |
| 36 | G | - |
| 39 | L/R | - |
| 44 | G/O | - |
| 45 | LG/R | - |
| 46 | GR/W | - |
| 48 | L/O | - |
| 51 | B/W | - |
| 53 | R/L | - |
| 54 | O | - |
| 57 | GR | - |
| 59 | V | - |
| 60 | R/W | - |
| 61 | PU/W | - |
| 62 | W/L | - |
| 63 | W/B | - |
| 67 | Y/R | - |
| 69 | LG | - |
| 70 | SHIELD | - |
| 71 | P/B | - |
| 72 | R/G | - |

JRDWC1938GB

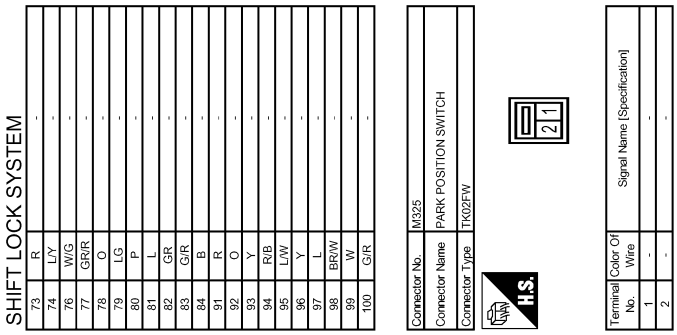


JRDWC1939GB

## Component Function Check

INFOID:0000000009949050

### 1. CHECK CVT SHIFT LOCK OPERATION (PART 1)

1. Turn ignition switch ON.
2. Shift selector lever to “P” position.
3. Attempt to shift the selector lever to any other position with the brake pedal released.

Can the selector lever be shifted to any other position?

YES >> Go to TM-170, "Diagnosis Procedure".
NO >> GO TO 2.

## 2. CHECK CVT SHIFT LOCK OPERATION (PART 2)

1. Shift selector lever to “P” position.
2. Attempt to shift the selector lever to any other position with the brake pedal depressed.

Can the selector lever be shifted to any other position?

YES >> INSPECTION END
NO >> Go to TM-170, "Diagnosis Procedure".

# Diagnosis Procedure

INFOID:0000000009949051

## 1. CHECK CVT SHIFT SELECTOR POWER CIRCUIT

1. Turn ignition switch OFF.
2. Disconnect CVT shift selector connector.
3. Turn ignition switch ON.
4. Check voltage between CVT shift selector vehicle side harness connector terminal and ground.

With intelligent key system

| CVT shift selector vehicle side harness connector | | Ground | Condition | Voltage (Approx.) |
|---|---|---|---|---|
| Connector | Terminal | | | |
| M58 | 5 | | Depressed brake pedal | Battery voltage |
| | | | Brake pedal not depressed | 0 V |

Without intelligent key system

| CVT shift selector vehicle side harness connector | | Ground | Condition | Voltage (Approx.) |
|---|---|---|---|---|
| Connector | Terminal | | | |
| M57 | 5 | | Depressed brake pedal | Battery voltage |
| | | | Brake pedal not depressed | 0 V |

Is the inspection result normal?

YES >> GO TO 2.
NO >> GO TO 6.

## 2. CHECK GROUND CIRCUIT

Check continuity between CVT shift selector vehicle side harness connector terminal and ground.

With intelligent key system

| CVT shift selector vehicle side harness connector | | Ground | Continuity |
|---|---|---|---|
| Connector | Terminal | | |
| M58 | 6 | | Existed |

Without intelligent key system

| CVT shift selector vehicle side harness connector | | Ground | Continuity |
|---|---|---|---|
| Connector | Terminal | | |
| M57 | 6 | | Existed |

Is the inspection result normal?

YES >> GO TO 3.
NO >> Repair or replace damaged parts.

## 3. CHECK CVT SHIFT SELECTOR

1. Shift selector lever to “P” position.
2. Check continuity between CVT shift selector connector terminals.

With intelligent key system

| CVT shift selector connector | | | Condition | Continuity |
|---|---|---|---|---|
| Connector | Terminal | | | |
| M58 | 5 | 6 | Selector lever: “P” position | Existed |
| | | | Other conditions | Not existed |

Without intelligent key system

| CVT shift selector connector | | | Condition | Continuity |
|---|---|---|---|---|
| Connector | Terminal | | | |
| M57 | 5 | 6 | Selector lever: “P” position | Existed |
| | | | Other conditions | Not existed |

Is the inspection result normal?

YES >> GO TO 4.
NO >> Repair or replace damaged parts.

## 4. CHECK PARK POSITION SWITCH

1. Disconnect park position switch connector.
2. Check park position switch. Refer to TM-173, "Component Inspection (Park Position Switch)".

Is the inspection result normal?

YES >> GO TO 5.
NO >> Replace park position switch. Refer to TM-216, "Exploded View".

## 5. CHECK SHIFT LOCK SOLENOID

Check shift lock solenoid. Refer to TM-173, "Component Inspection (Shift Lock Solenoid)".

Is the inspection result normal?

YES >> Check intermittent incident. Refer to GI-40, "Intermittent Incident".
NO >> Replace CVT shift selector. Refer to TM-216, "Exploded View".

## 6. CHECK HARNESS BETWEEN CVT SHIFT SELECTOR AND STOP LAMP SWITCH (PART 1)

1. Turn ignition switch OFF.
2. Disconnect stop lamp switch connector.
3. Check continuity between CVT shift selector vehicle side harness connector terminal and stop lamp switch vehicle side harness connector terminal.

With intelligent key system

| CVT shift selector vehicle side harness connector | | Stop lamp switch vehicle side harness connector | | Continuity |
|---|---|---|---|---|
| Connector | Terminal | Connector | Terminal | |
| M58 | 5 | E115 | 4 | Existed |

Without intelligent key system

| CVT shift selector vehicle side harness connector | | Stop lamp switch vehicle side harness connector | | Continuity |
|---|---|---|---|---|
| Connector | Terminal | Connector | Terminal | |
| M57 | 5 | E115 | 4 | Existed |

Is the inspection result normal?

YES >> GO TO 7.
NO >> Repair or replace damaged parts.

## 7. CHECK HARNESS BETWEEN CVT SHIFT SELECTOR AND STOP LAMP SWITCH (PART 2)

Check continuity between CVT shift selector vehicle side harness connector terminal and ground.

With intelligent key system

| CVT shift selector vehicle side harness connector | | Ground | Continuity |
|---|---|---|---|
| Connector | Terminal | | |
| M58 | 5 | | Not existed |

Without intelligent key system

| CVT shift selector vehicle side harness connector | | Ground | Continuity |
|---|---|---|---|
| Connector | Terminal | | |
| M57 | 5 | | Not existed |

Is the inspection result normal?

YES >> GO TO 8.
NO >> Repair or replace damaged parts.

## 8. CHECK STOP LAMP SWITCH (PART 1)

Check stop lamp switch. Refer to TM-172, "Component Inspection (Stop Lamp Switch)".

Is the inspection result normal?

YES >> GO TO 11.
NO >> GO TO 9.

## 9. PERFORM STOP LAMP SWITCH INSTALLATION POSITION ADJUSTMENT

Perform stop lamp switch installation position adjustment. Refer to BR-7, "Inspection and Adjustment".

>> GO TO 10.

## 10. CHECK STOP LAMP SWITCH (PART 2)

Check stop lamp switch. Refer to TM-172, "Component Inspection (Stop Lamp Switch)".

Is the inspection result normal?

YES >> INSPECTION END
NO >> Replace stop lamp switch. Refer to BR-17, "Exploded View".

## 11. CHECK HARNESS BETWEEN STOP LAMP SWITCH AND IGNITION SWITCH

Check continuity between stop lamp switch vehicle side harness connector terminal and ground.

| Stop lamp switch vehicle side harness connector | | Ground | Continuity |
|---|---|---|---|
| Connector | Terminal | | |
| E115 | 3 | | Not existed |

Is the inspection result normal?

YES >> GO TO 12.
NO >> Repair or replace damaged parts.

## 12. DETECT MALFUNCTIONING ITEMS

Check the following.

- 10A fuse (No.2)
- Harness for short or open between stop lamp switch and ignition switch (Refer to PG-33, "Wiring Diagram - IGNITION POWER SUPPLY -".)
- Ignition switch

Is the inspection result normal?

YES >> Check intermittent incident. Refer to GI-40, "Intermittent Incident".
NO >> Repair or replace damaged parts.

# Component Inspection (Stop Lamp Switch)

INFOID:0000000009949052

## 1. CHECK STOP LAMP SWITCH

Check continuity between stop lamp switch connector terminals.

| Stop lamp switch connector | | | Condition | Continuity |
|---|---|---|---|---|
| Connector | Terminal | | | |
| E115 | 1 | 2 | Depressed brake pedal | Existed |
| | | | Brake pedal not depressed | Not existed |
| | 3 | 4 | Depressed brake pedal | Existed |
| | | | Brake pedal not depressed | Not existed |

Is the inspection result normal?

YES >> INSPECTION END
NO >> Replace stop lamp switch. Refer to BR-17, "Exploded View".

## Component Inspection (Shift Lock Solenoid)

INFOID:0000000009949053

### 1. CHECK SHIFT LOCK SOLENOID

Apply voltage to CVT shift selector connector terminal and park position switch connector terminal then check that shift lock solenoid is activated.

**CAUTION:**

**Before applying voltage, always install a fuse between battery positive terminal and CVT shift selector connector terminal.**

With intelligent key system

| CVT shift selector connector | | Park position switch connector | | Condition | Status |
|---|---|---|---|---|---|
| Connector | Terminal | Connector | Terminal | | |
| M58 | 5 | M325 | 1 | Impress battery voltage to CVT shift selector connector terminal 5. | Shift lock solenoid operates |

Without intelligent key system

| CVT shift selector connector | | Park position switch connector | | Condition | Status |
|---|---|---|---|---|---|
| Connector | Terminal | Connector | Terminal | | |
| M57 | 5 | M325 | 1 | Impress battery voltage to CVT shift selector connector terminal 5. | Shift lock solenoid operates |

Is the inspection result normal?

YES >> INSPECTION END
NO >> Replace CVT shift selector. Refer to TM-216, "Exploded View".

## Component Inspection (Park Position Switch)

INFOID:0000000009949054

### 1. CHECK PARK POSITION SWITCH

Check continuity between park position switch connector terminals.

| Park position switch connector | | | Condition | Continuity |
|---|---|---|---|---|
| Connector | Terminal | | | |
| M325 | 1 | 2 | Park position switch: ON | Existed |
| | | | Park position switch: OFF | Not existed |

Is the inspection result normal?

YES >> INSPECTION END
NO >> Replace park position switch. Refer to TM-216, "Exploded View".

# ECU DIAGNOSIS INFORMATION

## TCM

### Reference Value

INFOID:0000000009949055

#### VALUES ON THE DIAGNOSIS TOOL

**NOTE:**
The following table includes information (items) inapplicable to this vehicle. For information (items) applicable to this vehicle, refer to CONSULT display items.

| Monitor item | Condition | Value / Status (Approx.) |
|---|---|---|
| VSP SENSOR | During driving | Approximately matches the speedometer reading. |
| ESTM VSP SIG | During driving | Approximately matches the speedometer reading. |
| PRI SPEED SEN | During driving (Lock-up ON) | Approximately matches the engine speed. |
| ENG SPEED SIG | Engine running | Closely matches the tachometer reading. |
| SEC HYDR SEN | • Selector lever: “N” position<br>• Idle speed | 0.8 V |
| ATF TEMP SEN | CVT fluid temperature: 20°C (68°F) | 2.01 – 2.05 V |
| | CVT fluid temperature: 50°C (122°F) | 1.45 – 1.50 V |
| | CVT fluid temperature: 80°C (176°F) | 0.90 – 0.94 V |
| VIGN SEN | Ignition switch: ON | Battery voltage |
| VEHICLE SPEED | During driving | Approximately matches the speedometer reading. |
| PRI SPEED | During driving (Lock-up ON) | Approximately matches the engine speed. |
| SEC SPEED | During driving | 50 X (Approximately matches the speedometer reading.) |
| ENG SPEED | Engine running | Closely matches the tachometer reading. |
| GEAR RATIO | During driving | 2.56 – 0.43 |
| ACC PEDAL OPEN | Released accelerator pedal - Fully depressed accelerator pedal | 0.0/8 – 8.0/8 |
| SEC PRESS | • Selector lever: “N” position<br>• Idle speed | 0 – 1 MPa |
| ATFTEMP COUNT*1 | CVT fluid temperature: 20°C (68°F) | 47 |
| | CVT fluid temperature: 50°C (122°F) | 104 |
| | CVT fluid temperature: 80°C (176°F) | 161 |
| STM STEP | During driving | –7 step – 171 step |
| ISOLT1 | Lock-up “OFF” | 0 A |
| | Lock-up “ON” | 0.7 A |
| ISOLT2 | Line pressure low | 0.8 A |
| | Line pressure high | 0 A |
| ISOLT3 | Secondary pressure low - Secondary pressure high | 0.8 – 0 A |
| SOLMON1 | Lock-up “OFF” | 0 A |
| | Lock-up “ON” | 0.7 A |

| Monitor item | Condition | Value / Status (Approx.) |
|---|---|---|
| SOLMON2 | • Selector lever: “N” position<br>• Idle speed | 0.8 A |
| | Stall speed | 0.3 – 0.6 A |
| SOLMON3 | • Selector lever: “N” position<br>• Idle speed | 0.6 – 0.7 A |
| | Stall speed | 0.4 – 0.6 A |
| BRAKESW | Depressed brake pedal | On |
| | Brake pedal not depressed | Off |
| FULL SW | Fully depressed accelerator pedal | On |
| | Released accelerator pedal | Off |
| IDLE SW | After engine is warmed up, release accelerator pedal | On |
| | Fully depressed accelerator pedal | Off |
| SPORT MODE SW | Press and hold overdrive control switch | On |
| | Other conditions | Off |
| INDLRNG | Selector lever: “L” position | On |
| | Other conditions | Off |
| INDDRNG | Selector lever: “D” position | On |
| | Other conditions | Off |
| INDNRNG | Selector lever: “N” position | On |
| | Other conditions | Off |
| INDRRNG | Selector lever: “R” position | On |
| | Other conditions | Off |
| INDPRNG | Selector lever: “P” position | On |
| | Other conditions | Off |
| SPORT MODE IND | When overdrive OFF condition | On |
| | Other conditions | Off |
| SMCOIL D | During driving | Changes On ⇔ Off |
| SMCOIL C | During driving | Changes On ⇔ Off |
| SMCOIL B | During driving | Changes On ⇔ Off |
| SMCOIL A | During driving | Changes On ⇔ Off |
| LUSEL SOL OUT | Selector lever: “P” and “N” positions | On |
| | Wait at least for 5 seconds with the selector lever in “R”, “D” and “L” positions | Off |
| LUSEL SOL MON | Selector lever: “P” and “N” positions | On |
| | Wait at least for 5 seconds with the selector lever in “R”, “D” and “L” positions | Off |
| VDC ON | VDC operate | On |
| | Other conditions | Off |
| TCS ON | TCS operate | On |
| | Other conditions | Off |
| ABS ON | ABS operates | On |
| | Other conditions | Off |
| RANGE | Selector lever: “P” and “N” positions | N·P |
| | Selector lever: “R” position | R |
| | Selector lever: “D” position | D |
| | Selector lever: “L” position | L |

| Monitor item | Condition | Value / Status (Approx.) |
|---|---|---|
| L POSITION SW | Selector lever: “L” position | On |
| | Other conditions | Off |
| D POSITION SW | Selector lever: “D” position | On |
| | Other conditions | Off |
| N POSITION SW | Selector lever: “N” position | On |
| | Other conditions | Off |
| R POSITION SW | Selector lever: “R” position | On |
| | Other conditions | Off |
| P POSITION SW | Selector lever: “P” position | On |
| | Other conditions | Off |
| CVT-A | — | — |
| CVT-B | — | — |

*1: Means CVT fluid temperature. Convert numerical values for actual fluid temperature °C (°F). Refer to TM-203, "ATFTEMP COUNT Conversion Table".

## TERMINAL LAYOUT

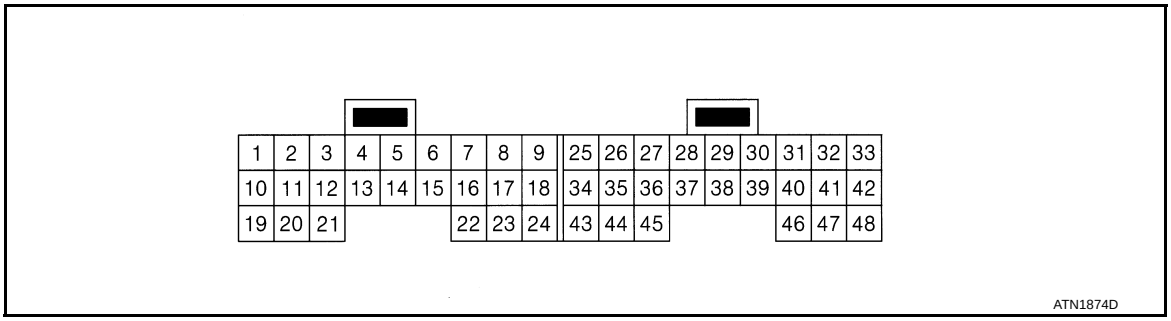


## PHYSICAL VALUES

| Terminal (Wire color) | | Description | | Condition | | Value (Approx.) |
|---|---|---|---|---|---|---|
| + | – | Signal name | Input/ Output | | | |
| 1 (Y) | Ground | Line pressure solenoid valve | Output | • Selector lever: “N” position<br>• Idle speed<br>• After engine is warmed up, release accelerator pedal | | 5.0 – 7.0 V |
| | | | | • Selector lever: “N” position<br>• Idle speed<br>• After engine is warmed up, fully depress accelerator pedal | | 1.0 V |
| 2 (LG) | Ground | Secondary pressure solenoid valve | Output | • Selector lever: “N” position<br>• Idle speed<br>• After engine is warmed up, release accelerator pedal | | 5.0 – 7.0 V |
| | | | | • Selector lever: “N” position<br>• Idle speed<br>• After engine is warmed up, fully depress accelerator pedal | | 3.0 – 4.0 V |
| 3 (BR) | Ground | Torque converter clutch solenoid valve | Output | During driving | When CVT performs lock-up. | 6.0 V |
| | | | | | When CVT does not perform lock-up | 1.0 V |

| Terminal (Wire color) | | Description | | Condition | | Value (Approx.) |
|---|---|---|---|---|---|---|
| + | – | Signal name | Input/ Output | | | |
| 4 (O) | Ground | Lock-up select solenoid valve | Output | Ignition switch: ON | Selector lever: “P” and “N” positions | Battery voltage |
| | | | | | Wait at least for 5 seconds with the selector lever in “R”, “D” and “L” positions | 0 V |
| 5 (L) | — | CAN-H | Input/ Output | — | | — |
| 6 (P) | — | CAN-L | Input/ Output | — | | — |
| 10 (R) | Ground | Ignition power supply | Input | Ignition switch: ON | | Battery voltage |
| | | | | Ignition switch: OFF | | 0 V |
| 11 (W) | Ground | Step motor A | Output | Within 2 seconds after ignition switch ON, the time measurement by using the pulse width measurement function (Hi level) of CONSULT*<br>*: Connect the diagnosis data link cable to the vehicle diagnosis connector | | 30.0 msec |
| 12 (L) | Ground | Step motor B | Output | | | 10.0 msec |
| 13 (SB) | — | ROM ASSY (SEL2) | — | — | | — |
| 14 (P) | — | ROM ASSY (SEL1) | — | — | | — |
| 15 (V) | — | ROM ASSY (SEL3) | — | — | | — |
| 18 (BR) | Ground | P RANGE SW | Input | Ignition switch: ON | Selector lever: “P” position | Battery voltage |
| | | | | | Other conditions | 0 V |
| 19 (R) | Ground | Ignition power supply | Input | Ignition switch: ON | | Battery voltage |
| | | | | Ignition switch: OFF | | 0 V |
| 20 (SB) | Ground | Step motor C | Output | Within 2 seconds after ignition switch ON, the time measurement by using the pulse width measurement function (Hi level) of CONSULT*<br>*: Connect the diagnosis data link cable to the vehicle diagnosis connector | | 30.0 msec |
| 21 (Y) | Ground | Step motor D | Output | | | 10.0 msec |
| 22 (GR) | Ground | R RANGE SW | Input | Ignition switch: ON | Selector lever: “R” position | Battery voltage |
| | | | | | Other conditions | 0 V |
| 25 (B) | Ground | Ground | Output | Always | | 0 V |
| 26 (LG) | Ground | N RANGE SW | Input | Ignition switch: ON | Selector lever: “N” position | Battery voltage |
| | | | | | Other conditions | 0 V |
| 28 (Y) | Ground | Battery power supply (memory backup) | Input | Always | | Battery voltage |
| 29 (W) | Ground | Secondary speed sensor | Input | • Selector lever: “L” position<br>• While driving at 20 km/h (12 MPH) | | 570 Hz<br> 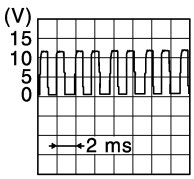 <br><br>JSDIA1305GB |

| Terminal (Wire color) | | Description | | Condition | | Value (Approx.) |
|---|---|---|---|---|---|---|
| + | – | Signal name | Input/ Output | | | |
| 37 (P) | Ground | Secondary pressure sensor | Input | • Selector lever: “N” position<br>• Idle speed | | 0.8 V |
| 38 (V) | Ground | Primary speed sensor | Input | • Selector lever: “L” position<br>• While driving at 20 km/h (12 MPH) | | 1275 Hz<br> 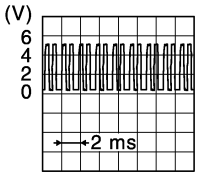 <br><br>JSDIA1306GB |
| 42 (R) | Ground | Sensor ground | Input | Always | | 0 V |
| 43 (SB) | Ground | D RANGE SW | Input | Ignition switch: ON | Selector lever: “D” position | Battery voltage |
| | | | | | Other conditions | 0 V |
| 44 (L) | Ground | L RANGE SW | Input | | Selector lever: “L” position | Battery voltage |
| | | | | | Other conditions | 0 V |
| 46 (BR) | Ground | Sensor power | Output | Ignition switch: ON | | 5.0 V |
| | | | | Ignition switch: OFF | | 0 V |
| 47 (LG) | Ground | CVT fluid temperature sensor | Input | Ignition switch: ON | CVT fluid temperature: 20°C (68°F) | 2.01 – 2.05 V |
| | | | | | CVT fluid temperature: 50°C (122°F) | 1.45 – 1.50 V |
| | | | | | CVT fluid temperature: 80°C (176°F) | 0.90 – 0.94 V |
| 48 (B) | Ground | Ground | Output | Always | | 0 V |

**NOTE:**
Voltage value is reference value between each terminal and terminal 5 or terminal 42 (ground terminal).

## Wiring Diagram - CVT CONTROL SYSTEM -

INFOID:0000000009949056

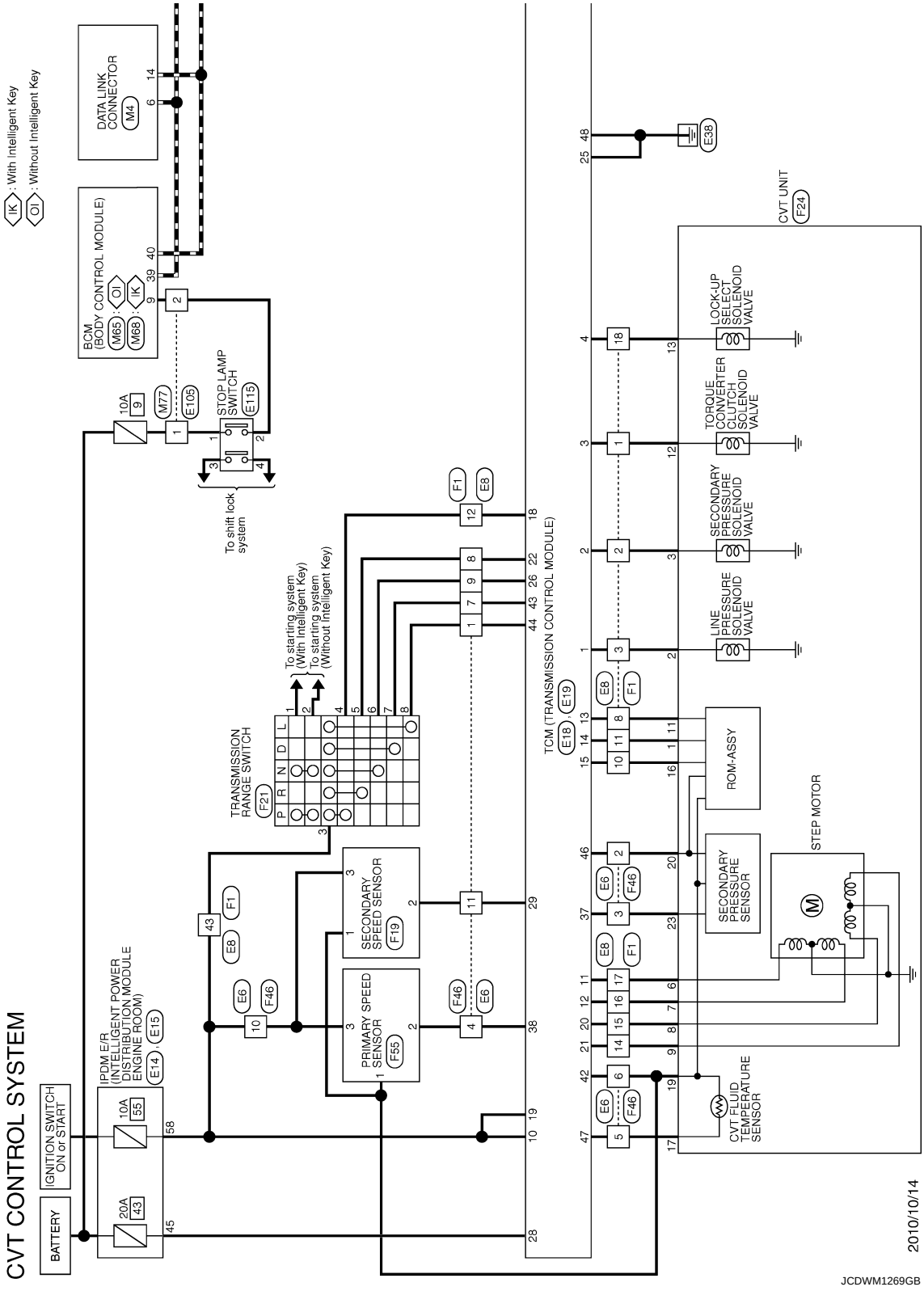

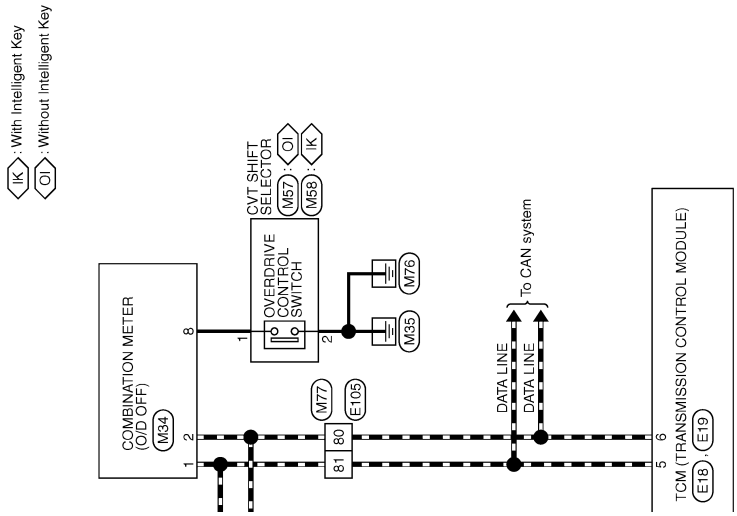


JCDWM1270GB

## CVT CONTROL SYSTEM

| Connector No. | E6 |
|---|---|
| Connector Name | WIRE TO WIRE |
| Connector Type | RH12FB |

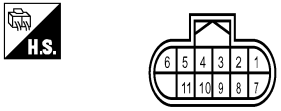


| Terminal No. | Color Of Wire | Signal Name [Specification] |
|---|---|---|
| 1 | L | - |
| 2 | BR | - |
| 3 | P | - |
| 4 | V | - |
| 5 | LG | - |
| 6 | R | - |
| 7 | SB | - |
| 8 | GR | - |
| 9 | LG | - |
| 10 | R | - |
| 11 | W | - |

| Connector No. | E8 |
|---|---|
| Connector Name | WIRE TO WIRE |
| Connector Type | SAA36MB-RS10-SJZ2 |

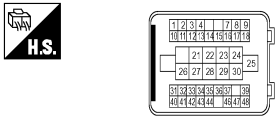


| Terminal No. | Color Of Wire | Signal Name [Specification] |
|---|---|---|
| 1 | BR | - |
| 2 | LG | - |
| 3 | Y | - |
| 4 | W | - |
| 7 | Y | - |
| 8 | SB | - |
| 9 | L | - |
| 10 | V | - |
| 11 | P | - |
| 12 | BR | - |
| 13 | LG | - |
| 14 | Y | - |
| 15 | SB | - |
| 16 | L | - |
| 17 | W | - |
| 18 | O | - |
| 21 | G | - |
| 22 | Y | - |
| 23 | SB | - |
| 24 | W | - |
| 25 | BR | - |
| 26 | B/Y | - |
| 27 | GR | - |
| 28 | P | - |
| 29 | V | - |
| 30 | G | - |
| 31 | G | - |
| 32 | O | - |
| 33 | W | - |
| 34 | Y | - |
| 35 | V | - |
| 36 | P | - |
| 37 | LG | - |
| 39 | SB | - |
| 40 | GR | - |
| 41 | O | - |
| 42 | V | - |
| 43 | LG | - [With M/T] |
| 43 | R | - [With CVT] |
| 44 | R | - |
| 46 | W | - |
| 47 | G | - |
| 48 | BR | - |

| Connector No. | E14 |
|---|---|
| Connector Name | IPDM E/R (INTELLIGENT POWER DISTRIBUTION MODULE ENGINE ROOM) |
| Connector Type | NS12FBR-CS |

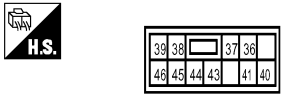


| Terminal No. | Color Of Wire | Signal Name [Specification] |
|---|---|---|
| 36 | O | - |
| 37 | V | - |
| 38 | G | - |
| 39 | V | - |
| 40 | R | - |
| 41 | SB | - |
| 43 | G | - |
| 44 | P | - |
| 45 | Y | - |
| 46 | O | - |

| Connector No. | E15 |
|---|---|
| Connector Name | IPDM E/R (INTELLIGENT POWER DISTRIBUTION MODULE ENGINE ROOM) |
| Connector Type | NS16FW-CS |

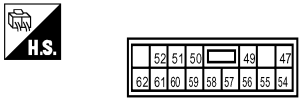


| Terminal No. | Color Of Wire | Signal Name [Specification] |
|---|---|---|
| 47 | BR | - |
| 49 | W | - |
| 50 | GR | - |
| 51 | R | - |
| 52 | P | - |
| 54 | GR | - |
| 55 | P | - |
| 56 | SB | - |
| 57 | G | - |
| 58 | LG | - [With M/T] |
| 58 | R | - [With CVT] |
| 59 | Y | - |
| 60 | V | - |
| 61 | W | - |
| 62 | L | - |

| Connector No. | E18 |
|---|---|
| Connector Name | TCM (TRANSMISSION CONTROL MODULE) |
| Connector Type | TK24FW |

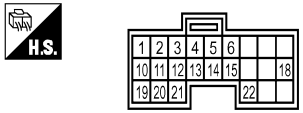


| Terminal No. | Color Of Wire | Signal Name [Specification] |
|---|---|---|
| 1 | Y | LINE PRESSURE SOLENOID VLVE |
| 2 | LG | SECONDARY PRESSURE SOLENOID VALVE |
| 3 | BR | TORQUE CONVERTER CLUTCH SOLENOID VALVE |
| 4 | O | LOCK-UP SELECT SOLENOID VALVE |
| 5 | L | CAN-H |
| 6 | P | CAN-L |
| 10 | R | IGNITION POWER SUPPLY |
| 11 | W | STEP MOTOR A |
| 12 | L | STEP MOTOR B |
| 13 | SB | ROM ASSY (SEL 2) |
| 14 | P | ROM ASSY (SEL 1) |
| 15 | V | ROM ASSY (SEL 3) |
| 18 | BR | P RANGE SW |
| 19 | R | IGNITION POWER SUPPLY |
| 20 | SB | STEP MOTOR C |
| 21 | Y | STEP MOTOR D |
| 22 | GR | R RANGE SW |

JRDWC1934GB

## CVT CONTROL SYSTEM

| | |
|---|---|
| Connector No. | E19 |
| Connector Name | TCM (TRANSMISSION CONTROL MODULE) |
| Connector Type | TK24FGY |

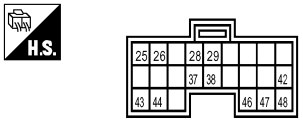


| Terminal No. | Color Of Wire | Signal Name [Specification] |
|---|---|---|
| 25 | B | GROUND |
| 26 | LG | N RANGE SW |
| 28 | Y | BATTERY POWER SUPPLY (MEMORY BACKUP) |
| 29 | W | SECONDARY SPEED SENSOR |
| 37 | P | SECONDARY PRESSURE SENSOR |
| 38 | V | PRIMARY SPEED SENSOR |
| 42 | R | SENSOR GROUND |
| 43 | SB | D RANGE SW |
| 44 | L | L RANGE SW |
| 46 | BR | SENSOR POWER |
| 47 | LG | CVT FLUID TEMPERATURE SENSOR |
| 48 | B | GROUND |

| | |
|---|---|
| Connector No. | E105 |
| Connector Name | WIRE TO WIRE |
| Connector Type | TH80MW-CS16-TM4 |

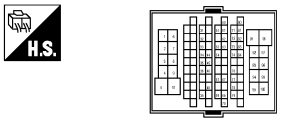


| Terminal No. | Color Of Wire | Signal Name [Specification] |
|---|---|---|
| 1 | V | - |
| 2 | W | - |
| 3 | SB | - |
| 4 | G | - |
| 5 | P | - |
| 6 | L | - [With NAVI] |
| 6 | R | - [Without NAVI] |
| 7 | Y | - |
| 8 | O | - |
| 9 | W | - |
| 10 | SB | - |
| 31 | V | - |
| 32 | R | - |
| 33 | GR | - |
| 34 | P | - |
| 35 | Y | - |
| 36 | BR | - |
| 39 | SB | - |
| 44 | R | - |
| 45 | V | - |
| 46 | P | - |
| 48 | L | - |
| 51 | B | - [With M/T] |
| 51 | BR | - [With CVT] |
| 53 | SB | - |
| 54 | O | - [With M/T] |
| 54 | W | - [With CVT] |
| 57 | LG | - |
| 59 | L | - |
| 60 | O | - |
| 61 | G | - |
| 62 | W | - |
| 63 | L | - |
| 67 | GR | - [With CVT] |
| 67 | V | - [With M/T] |
| 69 | P | - |
| 70 | SHIELD | - |
| 71 | GR | - |
| 72 | LG | - |
| 73 | P | - |
| 74 | V | - |
| 76 | Y | - |
| 77 | LG | - |
| 78 | O | - |
| 79 | G | - |
| 80 | P | - |
| 81 | L | - |
| 82 | W | - |
| 83 | BR | - |
| 84 | B | - |
| 91 | W | - |
| 92 | Y | - |
| 93 | Y | - |
| 94 | R | - |
| 95 | V | - |
| 96 | LG | - |
| 97 | R | - |
| 98 | SB | - |
| 99 | G | - |
| 100 | P | - |

| | |
|---|---|
| Connector No. | E115 |
| Connector Name | STOP LAMP SWITCH |
| Connector Type | M04FW-LC |

| Terminal No. | Color Of Wire | Signal Name [Specification] |
|---|---|---|
| 1 | V | - |
| 2 | W | - |
| 3 | O | - |
| 4 | G | - |

| | |
|---|---|
| Connector No. | F1 |
| Connector Name | WIRE TO WIRE |
| Connector Type | SAA36FB-RS10-SJZ2 |

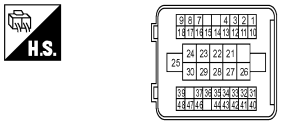


| Terminal No. | Color Of Wire | Signal Name [Specification] |
|---|---|---|
| 1 | SB | - |
| 2 | LG | - |
| 3 | R | - |
| 4 | Y | - |
| 7 | V | - |
| 8 | G | - |
| 9 | SB | - |
| 10 | L | - |
| 11 | Y | - |
| 12 | GR | - |
| 13 | BR | - |
| 14 | G | - |
| 15 | W | - |
| 16 | Y | - |
| 17 | P | - |
| 18 | BR | - |
| 21 | G | - |
| 22 | L | - |
| 23 | W | - |
| 24 | R | - |
| 25 | R | - |
| 26 | B | - |
| 27 | SB | - |
| 28 | V | - |
| 29 | V | - |
| 30 | BR | - |
| 31 | GR | - |
| 32 | BR | - |
| 33 | W | - |
| 34 | LG | - |
| 35 | V | - |
| 36 | Y | - |
| 37 | W | - |
| 39 | G | - |
| 40 | P | - |
| 41 | O | - |
| 42 | G | - |
| 43 | R | - |
| 44 | P | - |
| 46 | GR | - |
| 47 | Y | - |
| 48 | BR | - |

| | |
|---|---|
| Connector No. | F19 |
| Connector Name | SECONDARY SPEED SENSOR |
| Connector Type | RK03FB |

| Terminal No. | Color Of Wire | Signal Name [Specification] |
|---|---|---|
| 1 | LG | - |
| 2 | G | - |
| 3 | R | - |

JRDWC1935GB

## CVT CONTROL SYSTEM

| Connector No. | F21 |
|---|---|
| Connector Name | TRANSMISSION RANGE SWITCH |
| Connector Type | RK08FG |

| Terminal No. | Color Of Wire | Signal Name [Specification] |
|---|---|---|
| 1 | R | - |
| 2 | W | - |
| 3 | R | - |
| 4 | GR | - |
| 5 | SB | - |
| 6 | W | - |
| 7 | Y | - |
| 8 | G | - |

| Connector No. | F24 |
|---|---|
| Connector Name | CVT UNIT |
| Connector Type | Yazaki_7283-8750-30 |

| Terminal No. | Color Of Wire | Signal Name [Specification] |
|---|---|---|
| 1 | Y | - |
| 2 | R | - |
| 3 | LG | - |
| 6 | P | - |
| 7 | Y | - |
| 8 | W | - |
| 9 | G | - |
| 11 | G | - |
| 12 | SB | - |
| 13 | BR | - |
| 16 | L | - |
| 17 | BR | - |
| 19 | LG | - |
| 20 | O | - |
| 23 | L | - |

| Connector No. | F46 |
|---|---|
| Connector Name | WIRE TO WIRE |
| Connector Type | RH12MB |

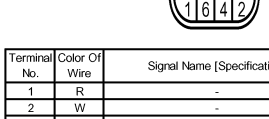


| Terminal No. | Color Of Wire | Signal Name [Specification] |
|---|---|---|
| 1 | G | - |
| 2 | O | - |
| 3 | L | - |
| 4 | V | - |
| 5 | BR | - |
| 6 | LG | - |
| 7 | Y | - |
| 8 | SB | - |
| 9 | W | - |
| 10 | R | - |
| 11 | G | - |

| Connector No. | F55 |
|---|---|
| Connector Name | PRIMARY SPEED SENSOR |
| Connector Type | RK03FB |

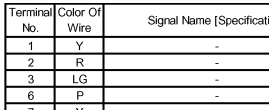


| Terminal No. | Color Of Wire | Signal Name [Specification] |
|---|---|---|
| 1 | LG | - |
| 2 | V | - |
| 3 | R | - |

| Connector No. | M4 |
|---|---|
| Connector Name | DATA LINK CONNECTOR |
| Connector Type | BD16FW |




| Terminal No. | Color Of Wire | Signal Name [Specification] |
|---|---|---|
| 4 | B | - |
| 5 | B | - |
| 6 | L | - |
| 7 | GR/R | - |
| 8 | O | - |
| 14 | P | - |
| 16 | LG/R | - |

| Connector No. | M34 |
|---|---|
| Connector Name | COMBINATION METER |
| Connector Type | TH40FW-NH |




| Terminal No. | Color Of Wire | Signal Name [Specification] |
|---|---|---|
| 1 | L | CAN-H |
| 2 | P | CAN-L |
| 3 | V | VEHICLE SPEED SIGNAL (2-PULSE) |
| 4 | L | VEHICLE SPEED SIGNAL (8-PULSE) [Without NAVI] |
| 4 | V/R | VEHICLE SPEED SIGNAL (8-PULSE) [With NAVI] |
| 6 | BR/Y | FUEL LEVEL SENSOR SIGNAL |
| 7 | R/G | AIR BAG SIGNAL |
| 8 | P | OVERDRIVE CONTROL SWITCH SIGNAL |
| 9 | O | SEAT BELT BUCKLE SWITCH SIGNAL (DRIVER SIDE) |
| 10 | SB | PARKING BRAKE SWITCH SIGNAL |
| 11 | G/R | BRAKE FLUID LEVEL SWITCH SIGNAL |
| 13 | B/R | ILLUMINATION CONTROL SIGNAL |
| 15 | L/Y | ACC POWER SUPPLY |
| 18 | R/Y | SECURITY SIGNAL |
| 19 | PU/W | AMBIENT SENSOR SIGNAL |
| 20 | R/W | AMBIENT SENSOR GROUND |
| 21 | B | GROUND |
| 22 | B | GROUND |
| 23 | B | GROUND |
| 24 | PU | FUEL LEVEL SENSOR GROUND |
| 25 | B | VDC GROUND |
| 27 | LG/R | BATTERY POWER SUPPLY |
| 28 | GR | IGNITION SIGNAL |
| 29 | BR | PASSENGER SEAT BELT WARNING SIGNAL |
| 31 | R | A/C AUTO AMP. CONNECTION RECOGNITION SIGNAL |
| 35 | BR | ENGINE COOLANT TEMPERATURE SIGNAL |
| 38 | GR | ALTERNATOR SIGNAL |

| Connector No. | M57 |
|---|---|
| Connector Name | CVT SHIFT SELECTOR |
| Connector Type | TH08FW-NH |

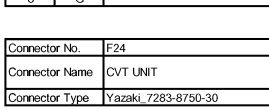


| Terminal No. | Color Of Wire | Signal Name [Specification] |
|---|---|---|
| 1 | P | - |
| 2 | B | - |
| 3 | W | - |
| 4 | B/R | - |
| 5 | LG | - |
| 6 | B | - |

JRDWC1936GB

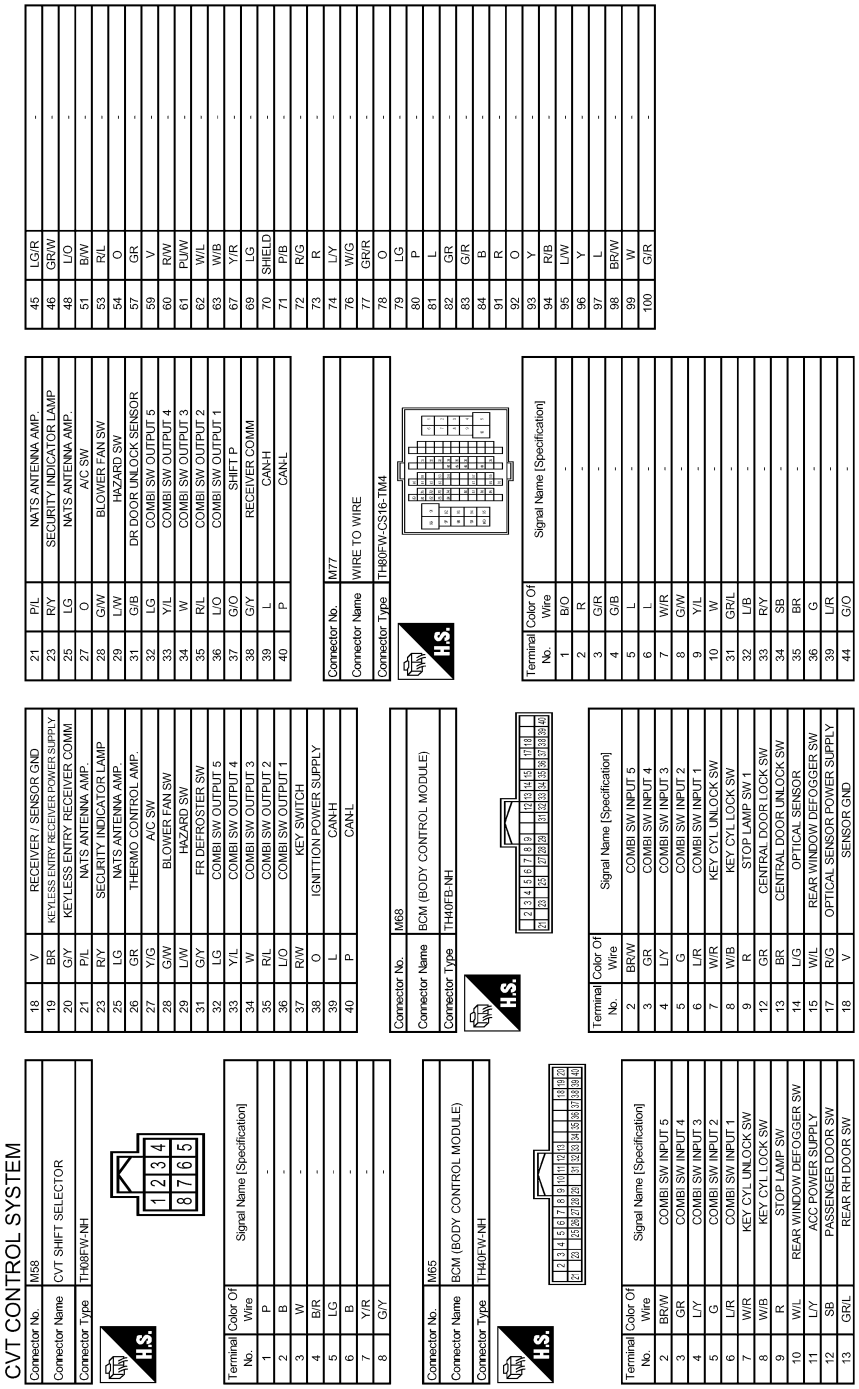


JRDWC1937GB

## Fail-safe

*INFOID:0000000009949057*

### Description

When a malfunction is detected in each sensor, switch, solenoid or others, this function provides control to minimize reduction of drivability so that durability of transmission assembly can be acquired.

| DTC | Condition | | Vehicle behavior |
|---|---|---|---|
| P0703 | — | | • Start is slow<br>• Acceleration is slow |
| P0705 | — | | • Position indicator on combination meter is not displayed<br>• Selector shock is large<br>• Start is slow<br>• Acceleration at high load state is slow<br>• Overdrive off condition is not activated<br>• “L” position is not activated |
| P0710 | Engine coolant temperature when engine starts is 10°C (50°F) or more | Open circuit is detected while ignition switch is OFF | • Selector shock is large<br>• Low is fixed |
| | | Other than the above | • Selector shock is large<br>• Engine speed is high in middle and high speed range |
| | Engine coolant temperature when engine starts is 10°C (50°F) or less | | • Start is slow<br>• Acceleration is slow<br>• Vehicle speed is not increased |
| | Engine coolant temperature when engine starts is –35°C (–31°F) or less | | Vehicle speed is not increased |
| P0715 | — | | • Re-acceleration is slightly slow<br>• Re-start is slow after vehicle is stop by strong deceleration<br>• Overdrive off condition is not activated<br>• “L” position is not activated<br>• Lock-up is not performed |
| P0720 | — | | • Start is slow<br>• Re-acceleration is slow<br>• Re-start is slow after vehicle is stop by strong deceleration<br>• Overdrive off condition is not activated<br>• “L” position is not activated<br>• Lock-up is not performed |
| P0725 | — | | Lock-up is not performed |
| P0740 | — | | • Selector shock is large<br>• Lock-up is not performed |
| P0744 | — | | Lock-up is not performed |
| P0746 | A malfunction is detected | | • Start is slow<br>• Acceleration is slow<br>• Lock-up is not performed |
| | Function is excessively reduced after a malfunction is detected | | • Start is difficult<br>• Drive is difficult<br>• Lock-up is not performed |
| P0778 | — | | Engine speed is high in middle and high speed range |
| P0840 | — | | • Start is slow<br>• Acceleration at high load state is slow |
| P0841 | — | | • Start is slow<br>• Acceleration is slow |
| P0868 | — | | • Start is slow<br>• Acceleration is slow<br>(Slow acceleration is subject to secondary pressure that is recognized by TCM) |
| P1701 | — | | • Start is slow<br>• Acceleration at high load state is slow |
| P1705 | — | | • Acceleration is slow<br>• Lock-up is not performed |

| DTC | Condition | Vehicle behavior |
|---|---|---|
| P1709 | — | • Start is slow<br>• Acceleration is slow<br>• Shift position indicator (P, N) is not displayed, or is displayed with delay |
| P1722 | — | Lock-up is not activated in coast state |
| P1723 | A malfunction is detected in primary pulley speed sensor side | • Acceleration is slow<br>• Re-start is slow after vehicle is stop by strong deceleration<br>• Overdrive off condition is not activated<br>• “L” position is not activated<br>• Lock-up is not performed |
| | A malfunction is detected in secondary pulley speed sensor | • Start is slow<br>• Acceleration is slow<br>• Re-start is slow after vehicle is stop by strong deceleration<br>• Overdrive off condition is not activated<br>• “L” position is not activated<br>• Lock-up is not performed |
| P1726 | — | Acceleration is slow |
| P1740 | — | • Selector shock is large<br>• Lock-up is not performed |
| P1777 | A malfunction is detected in low side (when vehicle is stopped) | • Low is fixed<br>• Lock-up is not performed |
| | A malfunction is detected in high side (during driving) | • Start is slow<br>• Acceleration is low in low speed range<br>• Lock-up is not performed |
| U0100 | — | • Start is slow<br>• Acceleration is slow<br>• Vehicle speed is not increased |
| U1000 | — | • Start is slow<br>• Acceleration is slow<br>• Vehicle speed is not increased |
| U1010 | — | • Start is slow<br>• Acceleration is slow<br>• Vehicle speed is not increased |

## DTC Inspection Priority Chart

INFOID:0000000009949058

If some DTCs are displayed at the same time, perform inspections one by one based on the priority as per the following list.

| Priority | Detected items (DTC) |
|---|---|
| 1 | U0100, U1000, U1010, P1709 |
| 2 | Except above |

## DTC Index

INFOID:0000000009949059

When multiple malfunctions are detected simultaneously, perform inspection one by one according to DTC check priority list. Refer to TM-186, "DTC Inspection Priority Chart".

| DTC*1 | | Items (CONSULT screen terms) | Reference |
|---|---|---|---|
| MIL*2, “ENGINE” with CONSULT or GST | “TRANSMISSION” with CONSULT | | |
| U0100 | U0100 | LOST COMM (ECM A) | TM-103, "DTC Logic" |
| U1000 | U1000 | CAN COMM CIRCUIT | TM-104, "DTC Logic" |
| — | U1010 | CONTROL UNIT (CAN) | TM-105, "DTC Logic" |

| DTC*1 | | Items (CONSULT screen terms) | Reference |
|---|---|---|---|
| MIL*2, “ENGINE” with CONSULT or GST | “TRANSMISSION” with CONSULT | | |
| — | P0703 | BRAKE SWITCH B | TM-106, "DTC Logic" |
| P0705 | P0705 | T/M RANGE SENSOR A | TM-109, "DTC Logic" |
| P0710 | P0710 | FLUID TEMP SENSOR A | TM-112, "DTC Logic" |
| P0715 | P0715 | INPUT SPEED SENSOR A | TM-116, "DTC Logic" |
| P0720 | P0720 | OUTPUT SPEED SENSOR | TM-119, "DTC Logic" |
| — | P0725 | ENGINE SPEED | TM-122, "DTC Logic" |
| P0740 | P0740 | TORQUE CONVERTER | TM-123, "DTC Logic" |
| P0744 | P0744 | TORQUE CONVERTER | TM-126, "DTC Logic" |
| P0745 | P0745 | PC SOLENOID A | TM-129, "DTC Logic" |
| P0746 | P0746 | PC SOLENOID A | TM-131, "DTC Logic" |
| P0776 | P0776 | PC SOLENOID B | TM-133, "DTC Logic" |
| P0778 | P0778 | PC SOLENOID B | TM-135, "DTC Logic" |
| P0840 | P0840 | FLUID PRESS SEN/SW A | TM-137, "DTC Logic" |
| — | P0841 | FLUID PRESS SEN/SW A | TM-139, "DTC Logic" |
| — | P0868 | FLUID PRESS LOW | TM-141, "DTC Logic" |
| — | P1701 | TCM | TM-144, "DTC Logic" |
| — | P1705 | TP SENSOR | TM-147, "DTC Logic" |
| — | P1709 | INCOMPLETED DATA WRITING | TM-148, "DTC Logic" |
| — | P1722 | VEHICLE SPEED | TM-150, "DTC Logic" |
| — | P1723 | SPEED SENSOR | TM-151, "DTC Logic" |
| — | P1726 | THROTTLE CONTROL SIGNAL | TM-153, "DTC Logic" |
| P1740 | P1740 | SLCT SOLENOID | TM-154, "DTC Logic" |
| P1777 | P1777 | STEP MOTOR | TM-157, "DTC Logic" |
| P1778 | P1778 | STEP MOTOR | TM-160, "DTC Logic" |

*1: These numbers are prescribed by SAE J2012.

*2: Refer to TM-98, "Diagnosis Description".

# SYMPTOM DIAGNOSIS

## SYSTEM SYMPTOM

### Symptom Table

INFOID:0000000009949060

The diagnostics item numbers show the sequence for inspection. Inspect in order from item 1.

| No. | Item | Symptom | Condition | Diagnostic item | Reference |
|---|---|---|---|---|---|
| 1 | Shift Shock | Large shock.<br>(“N”→“D” position) | ON vehicle | 1. Engine idle speed | EC-18 |
| | | | | 2. Engine speed signal | TM-122 |
| | | | | 3. Accelerator pedal position sensor | TM-147 |
| | | | | 4. CVT position | TM-215 |
| | | | | 5. CVT fluid temperature sensor | TM-112 |
| | | | | 6. CAN communication line | TM-104 |
| | | | | 7. CVT fluid level and state | TM-206 |
| | | | | 8. Line pressure test | TM-209 |
| | | | | 9. Torque converter clutch solenoid valve | TM-123 |
| | | | | 10. Lock-up select solenoid valve | TM-154 |
| | | | | 11. Transmission range switch | TM-109 |
| | | | OFF vehicle | 12. Control valve | TM-235 |
| | | | | 13. Forward clutch | |
| 2 | | Large shock.<br>(“N”→“R” position) | ON vehicle | 1. Engine idle speed | EC-18 |
| | | | | 2. Engine speed signal | TM-122 |
| | | | | 3. Accelerator pedal position sensor | TM-147 |
| | | | | 4. CVT position | TM-215 |
| | | | | 5. CVT fluid temperature sensor | TM-112 |
| | | | | 6. CAN communication line | TM-104 |
| | | | | 7. CVT fluid level and state | TM-206 |
| | | | | 8. Line pressure test | TM-209 |
| | | | | 9. Torque converter clutch solenoid valve | TM-123 |
| | | | | 10. Lock-up select solenoid valve | TM-154 |
| | | | | 11. Transmission range switch | TM-109 |
| | | | OFF vehicle | 12. Control valve | TM-235 |
| | | | | 13. Reverse brake | |
| 3 | | Shock is too large for lock-up. | ON vehicle | 1. CVT position | TM-215 |
| | | | | 2. Engine speed signal | TM-122 |
| | | | | 3. CAN communication line | TM-104 |
| | | | | 4. CVT fluid level and state | TM-206 |
| | | | OFF vehicle | 5. Control valve | TM-235 |
| | | | | 6. Torque converter | TM-239 |

| No. | Item | Symptom | Condition | Diagnostic item | Reference |
|---|---|---|---|---|---|
| 4 | Slips/Will Not Engage | Vehicle cannot take off from “D” position. | ON vehicle | 1. CVT fluid level and state | TM-206 |
| | | | | 2. CVT position | TM-215 |
| | | | | 3. CAN communication line | TM-104 |
| | | | | 4. Line pressure test | TM-209 |
| | | | | 5. Stall test | TM-208 |
| | | | | 6. Step motor | TM-157 |
| | | | | 7. Primary speed sensor | TM-116 |
| | | | | 8. Secondary speed sensor | TM-119 |
| | | | | 9. Accelerator pedal position sensor | TM-147 |
| | | | | 10. CVT fluid temperature sensor | TM-112 |
| | | | | 11. Secondary pressure sensor | TM-135 |
| | | | | 12. TCM power supply and ground | TM-144 |
| | | | OFF vehicle | 13. Control valve | TM-235 |
| | | | | 14. Oil pump assembly | |
| | | | | 15. Forward clutch | |
| | | | | 16. Parking components | |

| No. | Item | Symptom | Condition | Diagnostic item | Reference |
|---|---|---|---|---|---|
| 5 | Slips/Will Not Engage | Vehicle cannot take off from “R” position. | ON vehicle | 1. CVT fluid level and state | TM-206 |
| | | | | 2. CVT position | TM-215 |
| | | | | 3. CAN communication line | TM-104 |
| | | | | 4. Line pressure test | TM-209 |
| | | | | 5. Stall test | TM-208 |
| | | | | 6. Step motor | TM-157 |
| | | | | 7. Primary speed sensor | TM-116 |
| | | | | 8. Secondary speed sensor | TM-119 |
| | | | | 9. Accelerator pedal position sensor | TM-147 |
| | | | | 10. CVT fluid temperature sensor | TM-112 |
| | | | | 11. Secondary pressure sensor | TM-135 |
| | | | | 12. TCM power supply and ground | TM-144 |
| | | | OFF vehicle | 13. Control valve | TM-235 |
| | | | | 14. Oil pump assembly | |
| | | | | 15. Reverse brake | |
| | | | | 16. Parking components | |
| 6 | | Does not lock-up. | ON vehicle | 1. CVT fluid level and state | TM-206 |
| | | | | 2. Line pressure test | TM-209 |
| | | | | 3. Engine speed signal | TM-122 |
| | | | | 4. Primary speed sensor | TM-116 |
| | | | | 5. Torque converter clutch solenoid valve | TM-123 |
| | | | | 6. CAN communication line | TM-104 |
| | | | | 7. Stall test | TM-208 |
| | | | | 8. Step motor | TM-157 |
| | | | | 9. Transmission range switch | TM-109 |
| | | | | 10. Lock-up select solenoid valve | TM-154 |
| | | | | 11. CVT fluid temperature sensor | TM-112 |
| | | | | 12. Secondary speed sensor | TM-119 |
| | | | | 13. Secondary pressure sensor | TM-135 |
| | | | OFF vehicle | 14. Torque converter | TM-239 |
| | | | | 15. Control valve | TM-235 |
| | | | | 16. Oil pump assembly | |

| No. | Item | Symptom | Condition | Diagnostic item | Reference |
|---|---|---|---|---|---|
| 7 | Slips/Will Not Engage | Does not hold lock-up condition. | ON vehicle | 1. CVT fluid level and state | TM-206 |
| | | | | 2. Line pressure test | TM-209 |
| | | | | 3. Engine speed signal | TM-122 |
| | | | | 4. Primary speed sensor | TM-116 |
| | | | | 5. Torque converter clutch solenoid valve | TM-123 |
| | | | | 6. CAN communication line | TM-104 |
| | | | | 7. Stall test | TM-208 |
| | | | | 8. Step motor | TM-157 |
| | | | | 9. Transmission range switch | TM-109 |
| | | | | 10. Lock-up select solenoid valve | TM-154 |
| | | | | 11. CVT fluid temperature sensor | TM-112 |
| | | | | 12. Secondary speed sensor | TM-119 |
| | | | | 13. Secondary pressure sensor | TM-135 |
| | | | OFF vehicle | 14. Torque converter | TM-239 |
| | | | | 15. Control valve | TM-235 |
| | | | | 16. Oil pump assembly | |
| 8 | | Lock-up is not released. | ON vehicle | 1. CVT fluid level and state | TM-206 |
| | | | | 2. Line pressure test | TM-209 |
| | | | | 3. Engine speed signal | TM-122 |
| | | | | 4. Primary speed sensor | TM-116 |
| | | | | 5. Torque converter clutch solenoid valve | TM-123 |
| | | | | 6. CAN communication line | TM-104 |
| | | | | 7. Stall test | TM-208 |
| | | | OFF vehicle | 8. Torque converter | TM-239 |
| | | | | 9. Control valve | TM-235 |
| | | | | 10. Oil pump assembly | |

| No. | Item | Symptom | Condition | Diagnostic item | Reference |
|---|---|---|---|---|---|
| 9 | Slips/Will Not Engage | With selector lever in “D” position, acceleration is extremely poor. | ON vehicle | 1. CVT fluid level and state | TM-206 |
| | | | | 2. Line pressure test | TM-209 |
| | | | | 3. Stall test | TM-208 |
| | | | | 4. Accelerator pedal position sensor | TM-147 |
| | | | | 5. CAN communication line | TM-104 |
| | | | | 6. Transmission range switch | TM-109 |
| | | | | 7. CVT position | TM-215 |
| | | | | 8. Step motor | TM-157 |
| | | | | 9. Primary speed sensor | TM-116 |
| | | | | 10. Secondary speed sensor | TM-119 |
| | | | | 11. Accelerator pedal position sensor | TM-147 |
| | | | | 12. Secondary pressure sensor | TM-135 |
| | | | | 13. CVT fluid temperature sensor | TM-112 |
| | | | | 14. TCM power supply and ground | TM-144 |
| | | | OFF vehicle | 15. Torque converter | TM-239 |
| | | | | 16. Control valve | TM-235 |
| | | | | 17. Oil pump assembly | |
| | | | | 18. Forward clutch | |
| 10 | | With selector lever in “R” position, acceleration is extremely poor. | ON vehicle | 1. CVT fluid level and state | TM-206 |
| | | | | 2. Line pressure test | TM-209 |
| | | | | 3. Stall test | TM-208 |
| | | | | 4. Accelerator pedal position sensor | TM-147 |
| | | | | 5. CAN communication line | TM-104 |
| | | | | 6. Transmission range switch | TM-109 |
| | | | | 7. CVT position | TM-215 |
| | | | | 8. Step motor | TM-157 |
| | | | | 9. Primary speed sensor | TM-116 |
| | | | | 10. Secondary speed sensor | TM-119 |
| | | | | 11. Accelerator pedal position sensor | TM-147 |
| | | | | 12. Secondary pressure sensor | TM-135 |
| | | | | 13. CVT fluid temperature sensor | TM-112 |
| | | | | 14. TCM power supply and ground | TM-144 |
| | | | OFF vehicle | 15. Torque converter | TM-239 |
| | | | | 16. Control valve | TM-235 |
| | | | | 17. Oil pump assembly | |
| | | | | 18. Reverse brake | |

| No. | Item | Symptom | Condition | Diagnostic item | Reference |
|---|---|---|---|---|---|
| 11 | Slips/Will Not Engage | Slips at lock-up. | ON vehicle | 1. CVT fluid level and state | TM-206 |
| | | | | 2. Line pressure test | TM-209 |
| | | | | 3. Engine speed signal | TM-122 |
| | | | | 4. Primary speed sensor | TM-116 |
| | | | | 5. Torque converter clutch solenoid valve | TM-123 |
| | | | | 6. CAN communication line | TM-104 |
| | | | | 7. Stall test | TM-208 |
| | | | | 8. Step motor | TM-157 |
| | | | | 9. Transmission range switch | TM-109 |
| | | | | 10. Lock-up select solenoid valve | TM-154 |
| | | | | 11. CVT fluid temperature sensor | TM-112 |
| | | | | 12. Secondary speed sensor | TM-119 |
| | | | | 13. Secondary pressure sensor | TM-135 |
| | | | OFF vehicle | 14. Torque converter | TM-239 |
| | | | | 15. Control valve | TM-235 |
| | | | | 16. Oil pump assembly | |
| 12 | Others | No creep at all. | ON vehicle | 1.CVT fluid level and state | TM-206 |
| | | | | 2. Line pressure test | TM-209 |
| | | | | 3. Accelerator pedal position sensor | TM-147 |
| | | | | 4. Transmission range switch | TM-109 |
| | | | | 5. CAN communication line | TM-104 |
| | | | | 6. Stall test | TM-208 |
| | | | | 7. CVT position | TM-215 |
| | | | | 8. Step motor | TM-157 |
| | | | | 9. Primary speed sensor | TM-116 |
| | | | | 10. Secondary speed sensor | TM-119 |
| | | | | 11. Accelerator pedal position sensor | TM-147 |
| | | | | 12. CVT fluid temperature sensor | TM-112 |
| | | | | 13. Secondary pressure sensor | TM-135 |
| | | | | 14. TCM power supply and ground | TM-144 |
| | | | OFF vehicle | 15. Torque converter | TM-239 |
| | | | | 16. Control valve | TM-235 |
| | | | | 17. Oil pump assembly | |
| | | | | 18. Gear system | |
| | | | | 19. Forward clutch | |
| | | | | 20. Reverse brake | |

| No. | Item | Symptom | Condition | Diagnostic item | Reference |
|---|---|---|---|---|---|
| 13 | Others | Vehicle cannot drive in all positions. | ON vehicle | 1. CVT fluid level and state | TM-206 |
| | | | | 2. Line pressure test | TM-209 |
| | | | | 3. Transmission range switch | TM-109 |
| | | | | 4. Stall test | TM-208 |
| | | | | 5. CVT position | TM-215 |
| | | | | 6. Step motor | TM-157 |
| | | | | 7. Primary speed sensor | TM-116 |
| | | | | 8. Secondary speed sensor | TM-119 |
| | | | | 9. Accelerator pedal position sensor | TM-147 |
| | | | | 10. CVT fluid temperature sensor | TM-112 |
| | | | | 11. Secondary pressure sensor | TM-135 |
| | | | | 12. TCM power supply and ground | TM-144 |
| | | | OFF vehicle | 13. Torque converter | TM-239 |
| | | | | 14. Control valve | TM-235 |
| | | | | 15. Oil pump assembly | |
| | | | | 16. Gear system | |
| | | | | 17. Forward clutch | |
| | | | | 18. Reverse brake | |
| | | | | 19. Parking components | |
| 14 | | With selector lever in “D” position, driving is not possible. | ON vehicle | 1. CVT fluid level and state | TM-206 |
| | | | | 2. Line pressure test | TM-209 |
| | | | | 3. Transmission range switch | TM-109 |
| | | | | 4. Stall test | TM-208 |
| | | | | 5. CVT position | TM-215 |
| | | | | 6. Step motor | TM-157 |
| | | | | 7. Primary speed sensor | TM-116 |
| | | | | 8. Secondary speed sensor | TM-119 |
| | | | | 9. Accelerator pedal position sensor | TM-147 |
| | | | | 10. CVT fluid temperature sensor | TM-112 |
| | | | | 11. Secondary pressure sensor | TM-135 |
| | | | | 12. TCM power supply and ground | TM-144 |
| | | | OFF vehicle | 13. Torque converter | TM-239 |
| | | | | 14. Control valve | TM-235 |
| | | | | 15. Oil pump assembly | |
| | | | | 16. Gear system | |
| | | | | 17. Forward clutch | |
| | | | | 18. Parking components | |

| No. | Item | Symptom | Condition | Diagnostic item | Reference |
|---|---|---|---|---|---|
| 15 | Others | With selector lever in “R” position, driving is not possible. | ON vehicle | 1. CVT fluid level and state | TM-206 |
| | | | | 2. Line pressure test | TM-209 |
| | | | | 3. Transmission range switch | TM-109 |
| | | | | 4. Stall test | TM-208 |
| | | | | 5. CVT position | TM-215 |
| | | | | 6. Step motor | TM-157 |
| | | | | 7. Primary speed sensor | TM-116 |
| | | | | 8. Secondary speed sensor | TM-119 |
| | | | | 9. Accelerator pedal position sensor | TM-147 |
| | | | | 10. CVT fluid temperature sensor | TM-112 |
| | | | | 11. Secondary pressure sensor | TM-135 |
| | | | | 12. TCM power supply and ground | TM-144 |
| | | | OFF vehicle | 13. Torque converter | TM-239 |
| | | | | 14. Control valve | TM-235 |
| | | | | 15. Oil pump assembly | |
| | | | | 16. Gear system | |
| | | | | 17. Reverse brake | |
| | | | | 18. Parking components | |
| 16 | | Judder occurs during lock-up. | ON vehicle | 1. CVT fluid level and state | TM-206 |
| | | | | 2. Engine speed signal | TM-122 |
| | | | | 3. Primary speed sensor | TM-116 |
| | | | | 4. Secondary speed sensor | TM-119 |
| | | | | 5. Accelerator pedal position sensor | TM-147 |
| | | | | 6. CAN communication line | TM-104 |
| | | | | 7. Torque converter clutch solenoid valve | TM-123 |
| | | | OFF vehicle | 8. Torque converter | TM-239 |
| | | | | 9. Control valve | TM-235 |
| 17 | | Strange noise in “D” position. | ON vehicle | 1. CVT fluid level and state | TM-206 |
| | | | | 2. Engine speed signal | TM-122 |
| | | | | 3. CAN communication line | TM-104 |
| | | | OFF vehicle | 4. Torque converter | TM-239 |
| | | | | 5. Control valve | TM-235 |
| | | | | 6. Oil pump assembly | |
| | | | | 7. Gear system | |
| | | | | 8. Forward clutch | |
| | | | | 9. Bearing | |

| No. | Item | Symptom | Condition | Diagnostic item | Reference |
|---|---|---|---|---|---|
| 18 | Others | Strange noise in “R” position. | ON vehicle | 1. CVT fluid level and state | TM-206 |
| | | | | 2. Engine speed signal | TM-122 |
| | | | | 3. CAN communication line | TM-104 |
| | | | OFF vehicle | 4. Torque converter | TM-239 |
| | | | | 5. Control valve | TM-235 |
| | | | | 6. Oil pump assembly | |
| | | | | 7. Gear system | |
| | | | | 8. Reverse brake | |
| 19 | | Strange noise in “N” position. | ON vehicle | 1. CVT fluid level and state | TM-206 |
| | | | | 2. Engine speed signal | TM-122 |
| | | | | 3. CAN communication line | TM-104 |
| | | | OFF vehicle | 4. Torque converter | TM-239 |
| | | | | 5. Control valve | TM-235 |
| | | | | 6. Oil pump assembly | |
| | | | | 7. Gear system | |
| 20 | | Vehicle does not decelerate by engine brake. | ON vehicle | 1. CVT fluid level and state | TM-206 |
| | | | | 2. CVT position | TM-215 |
| | | | | 3. CAN communication line | TM-104 |
| | | | | 4. Step motor | TM-157 |
| | | | | 5. Primary speed sensor | TM-116 |
| | | | | 6. Secondary speed sensor | TM-119 |
| | | | | 7. Line pressure test | TM-209 |
| | | | | 8. Engine speed signal | TM-122 |
| | | | | 9. Accelerator pedal position sensor | TM-147 |
| | | | OFF vehicle | 10. Control valve | TM-235 |

| No. | Item | Symptom | Condition | Diagnostic item | Reference |
|---|---|---|---|---|---|
| 21 | Others | Maximum speed low. | ON vehicle | 1. CVT fluid level and state | TM-206 |
| | | | | 2. Line pressure test | TM-209 |
| | | | | 3. Accelerator pedal position sensor | TM-147 |
| | | | | 4. CAN communication line | TM-104 |
| | | | | 5. Stall test | TM-208 |
| | | | | 6. Step motor | TM-157 |
| | | | | 7. Primary speed sensor | TM-116 |
| | | | | 8. Secondary speed sensor | TM-119 |
| | | | | 9. Secondary pressure sensor | TM-135 |
| | | | | 10. CVT fluid temperature sensor | TM-112 |
| | | | OFF vehicle | 11. Torque converter | TM-239 |
| | | | | 12. Control valve | TM-235 |
| | | | | 13. Oil pump assembly | |
| | | | | 14. Gear system | |
| | | | | 15. Forward clutch | |
| 22 | | With selector lever in “P” position, vehicle does not enter parking condition or, with selector lever in another position, parking condition is not cancelled. | ON vehicle | 1. Transmission range switch | TM-109 |
| | | | | 2. CVT position | TM-215 |
| | | | OFF vehicle | 3. Parking components | TM-235 |
| 23 | | Vehicle drives with CVT in “P” position. | ON vehicle | 1. Transmission range switch | TM-109 |
| | | | | 2. CVT fluid level and state | TM-206 |
| | | | | 3. CVT position | TM-215 |
| | | | OFF vehicle | 4. Control valve | TM-235 |
| | | | | 5. Parking components | |
| | | | | 6. Gear system | |
| 24 | | Vehicle drives with CVT in “N” position. | ON vehicle | 1. Transmission range switch | TM-109 |
| | | | | 2. CVT fluid level and state | TM-206 |
| | | | | 3. CVT position | TM-215 |
| | | | OFF vehicle | 4. Control valve | TM-235 |
| | | | | 5. Gear system | |
| | | | | 6. Forward clutch | |
| | | | | 7. Reverse brake | |

| No. | Item | Symptom | Condition | Diagnostic item | Reference |
|---|---|---|---|---|---|
| 25 | Others | Engine stall. | ON vehicle | 1. CVT fluid level and state | TM-206 |
| | | | | 2. Engine speed signal | TM-122 |
| | | | | 3. Primary speed sensor | TM-116 |
| | | | | 4. Torque converter clutch solenoid valve | TM-123 |
| | | | | 5. CAN communication line | TM-104 |
| | | | | 6. Stall test | TM-208 |
| | | | | 7. Secondary pressure sensor | TM-135 |
| | | | OFF vehicle | 8. Torque converter | TM-239 |
| | | | | 9. Control valve | TM-235 |
| 26 | | Engine stalls when selector lever is shifted “N” → “D” or “R”. | ON vehicle | 1. CVT fluid level and state | TM-206 |
| | | | | 2. Engine speed signal | TM-122 |
| | | | | 3. Primary speed sensor | TM-116 |
| | | | | 4. Torque converter clutch solenoid valve | TM-123 |
| | | | | 5. CAN communication line | TM-104 |
| | | | | 6. Stall test | TM-208 |
| | | | OFF vehicle | 7. Torque converter | TM-239 |
| | | | | 8. Control valve | TM-235 |
| 27 | | Engine speed does not return to idle. | ON vehicle | 1. CVT fluid level and state | TM-206 |
| | | | | 2. Accelerator pedal position sensor | TM-147 |
| | | | | 3. Secondary speed sensor | TM-119 |
| | | | | 4. CAN communication line | TM-104 |
| | | | OFF vehicle | 5. Control valve | TM-235 |
| 28 | | CVT does not shift. | ON vehicle | 1. CVT fluid level and state | TM-206 |
| | | | | 2. CVT position | TM-215 |
| | | | | 3. Line pressure test | TM-209 |
| | | | | 4. Engine speed signal | TM-122 |
| | | | | 5. Accelerator pedal position sensor | TM-147 |
| | | | | 6. CAN communication line | TM-104 |
| | | | | 7. Primary speed sensor | TM-116 |
| | | | | 8. Secondary speed sensor | TM-119 |
| | | | | 9. Step motor | TM-157 |
| | | | OFF vehicle | 10. Control valve | TM-235 |
| | | | | 11. Oil pump assembly | |

| No. | Item | Symptom | Condition | Diagnostic item | Reference |
|---|---|---|---|---|---|
| 29 | Others | Engine does not start in “N” or “P” position. | ON vehicle | 1. Ignition switch and starter | PG-33, STR-9 |
| | | | | 2. CVT position | TM-215 |
| | | | | 3. Transmission range switch | TM-109 |
| 30 | | Engine starts in positions other than “N” or “P”. | ON vehicle | 1. Ignition switch and starter | PG-33, STR-9 |
| | | | | 2. CVT position | TM-215 |
| | | | | 3. Transmission range switch | TM-109 |
| 31 | | When brake pedal is depressed with ignition switch ON, selector lever cannot be shifted from “P” position to other position. | ON vehicle | 1. Stop lamp switch | TM-166 |
| | | | | 2. Shift lock solenoid | |
| | | | | 3. CVT shift selector | |
| 32 | | When brake pedal is not depressed with ignition switch ON, selector lever can be shifted from “P” position to other position. | ON vehicle | 1. Stop lamp switch | TM-166 |
| | | | | 2. Shift lock solenoid | |
| | | | | 3. CVT shift selector | |
| 33 | | Cannot be changed to overdrive OFF condition. | ON vehicle | 1. Overdrive control switch | TM-162 |
| | | | | 2. CAN communication line | TM-104 |
| | | | | 3. Combination meters | MWI-39 |
| 34 | | OD OFF indicator lamp is not turned ON. | ON vehicle | 1. CAN communication line | TM-104 |
| | | | | 2. Combination meters | MWI-39 |
| | | | | 3. TCM power supply and ground | TM-144 |

# PRECAUTION

## PRECAUTIONS

### Precaution for Supplemental Restraint System (SRS) "AIR BAG" and "SEAT BELT PRE-TENSIONER"

INFOID:0000000009949061

The Supplemental Restraint System such as “AIR BAG” and “SEAT BELT PRE-TENSIONER”, used along with a front seat belt, helps to reduce the risk or severity of injury to the driver and front passenger for certain types of collision. This system includes seat belt switch inputs and dual stage front air bag modules. The SRS system uses the seat belt switches to determine the front air bag deployment, and may only deploy one front air bag, depending on the severity of a collision and whether the front occupants are belted or unbelted.
Information necessary to service the system safely is included in the “SRS AIR BAG” and “SEAT BELT” of this Service Manual.

**WARNING:**
**Always observe the following items for preventing accidental activation.**
- **To avoid rendering the SRS inoperative, which could increase the risk of personal injury or death in the event of a collision that would result in air bag inflation, all maintenance must be performed by an authorized NISSAN/INFINITI dealer.**
- **Improper maintenance, including incorrect removal and installation of the SRS, can lead to personal injury caused by unintentional activation of the system. For removal of Spiral Cable and Air Bag Module, see “SRS AIR BAG”.**
- **Never use electrical test equipment on any circuit related to the SRS unless instructed to in this Service Manual. SRS wiring harnesses can be identified by yellow and/or orange harnesses or harness connectors.**

#### PRECAUTIONS WHEN USING POWER TOOLS (AIR OR ELECTRIC) AND HAMMERS

**WARNING:**
**Always observe the following items for preventing accidental activation.**
- **When working near the Air Bag Diagnosis Sensor Unit or other Air Bag System sensors with the ignition ON or engine running, never use air or electric power tools or strike near the sensor(s) with a hammer. Heavy vibration could activate the sensor(s) and deploy the air bag(s), possibly causing serious injury.**
- **When using air or electric power tools or hammers, always switch the ignition OFF, disconnect the battery, and wait at least 3 minutes before performing any service.**

### Precaution for Procedure without Cowl Top Cover

INFOID:0000000009949062

When performing the procedure after removing cowl top cover, cover the lower end of windshield with urethane, etc to prevent damage to windshield.

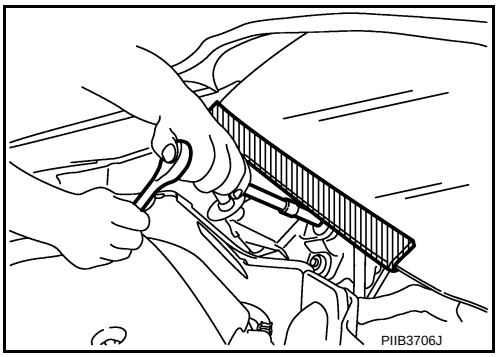

## Precautions for Removing of Battery Terminal

INFOID:0000000010194295

- When removing the 12V battery terminal, turn OFF the ignition switch and wait at least 30 seconds.
  **NOTE:**
  ECU may be active for several tens of seconds after the ignition switch is turned OFF. If the battery terminal is removed before ECU stops, then a DTC detection error or ECU data corruption may occur.
- For vehicles with the 2-batteries, be sure to connect the main battery and the sub battery before turning ON the ignition switch.
  **NOTE:**
  If the ignition switch is turned ON with any one of the terminals of main battery and sub battery disconnected, then DTC may be detected.

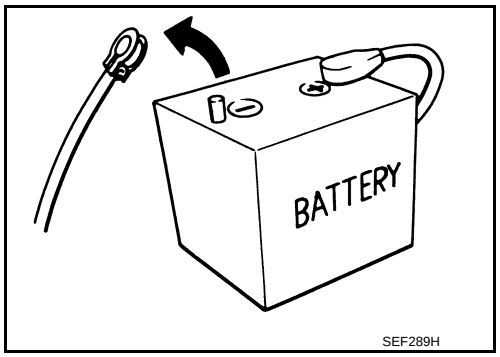


- After installing the 12V battery, always check "Self Diagnosis Result" of all ECUs and erase DTC.
  **NOTE:**
  The removal of 12V battery may cause a DTC detection error.

## Precaution for On Board Diagnosis (OBD) System of CVT and Engine

INFOID:0000000009949063

The ECM has an on board diagnostic system. It will light up the malfunction indicator (MIL) to warn the driver of a malfunction causing emission deterioration.

**CAUTION:**

- **Be sure to turn the ignition switch OFF and disconnect the battery cable from the negative terminal before any repair or inspection work. The open/short circuit of related switches, sensors, solenoid valves, etc. will cause the MIL to light up.**
- **Be sure to connect and lock the connectors securely after work. A loose (unlocked) connector will cause the MIL to light up due to an open circuit. (Be sure the connector is free from water, grease, dirt, bent terminals, etc.)**
- **Be sure to route and secure the harnesses properly after work. Interference of the harness with a bracket, etc. may cause the MIL to light up due to a short circuit.**
- **Be sure to connect rubber tubes properly after work. A misconnected or disconnected rubber tube may cause the MIL to light up due to a malfunction of the EVAP system or fuel injection system, etc.**
- **Be sure to erase the unnecessary malfunction information (repairs completed) from the TCM and ECM before returning the vehicle to the customer.**

## Precaution for TCM and Transaxle Assembly Replacement

INFOID:0000000009949064

**CAUTION:**

- **To replace TCM, refer to TM-67, "Description".**
- **To replace transaxle assembly, refer to TM-68, "Description".**

## Precaution

INFOID:0000000009949065

**NOTE:**
If any malfunction occurs in the RE0F08B model transaxle, replace the entire transaxle assembly.

- **Turn ignition switch OFF and disconnect negative battery cable before connecting or disconnecting the TCM harness connector. Because battery voltage is applied to TCM even if ignition switch is turned OFF.**

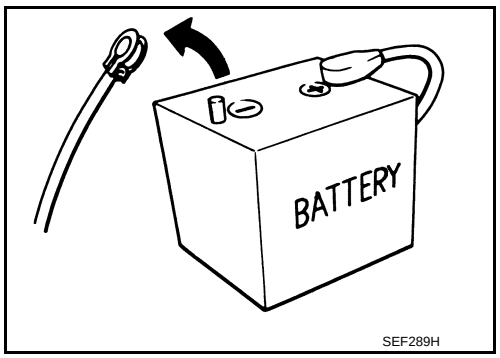

- **When connecting or disconnecting pin connectors into or from TCM, do not damage pin terminals (bend or break).**
  **Check that there are not any bends or breaks on TCM pin terminal, when connecting pin connectors.**

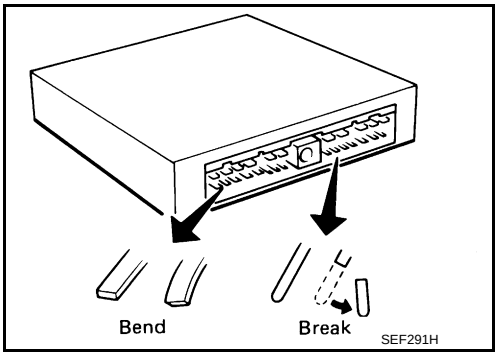


- **Perform TCM input/output signal inspection and check whether TCM functions normally or not before replacing TCM. TM-174, "Reference Value".**

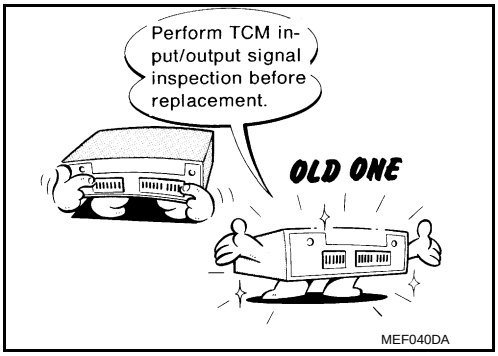


- **Perform "DTC Confirmation Procedure" after performing each TROUBLE DIAGNOSIS.**
  **If the repair is completed the DTC should not be displayed in the "DTC Confirmation Procedure".**
- Never disassemble transaxle unless it is described in this manual.
- Always use the specified brand of CVT fluid. Refer to MA-10, "Fluids and Lubricants".
- Use lint-free paper, not cloth rags, during work.
- Dispose of the waste oil using the methods prescribed by law, ordinance, etc. after replacing the CVT fluid.
- Perform the work in a clean workplace.
- Before starting removal, check normal state in advance.
- During work, never allow dust, dirt, and others to enter in transaxle inside.
- Use genuine Nissan parts for replacement.
- Never reuse fluid that is drained.
- Always treat drained fluid, used flushing oil, and others as oil waste.
- Perform fluid level check and replacement while keeping the vehicle in horizontal state.
- Apply the specified fluid to O-ring and oil seal when installing them.

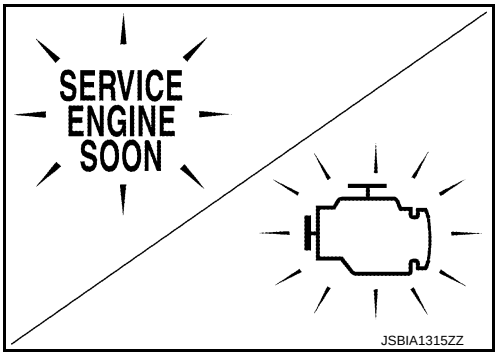


## Removal and Installation Procedure for CVT Unit Connector

INFOID:0000000009949066

### REMOVAL

- Rotate bayonet ring (A) counterclockwise. Pull out CVT unit harness connector (B) upward and remove it.

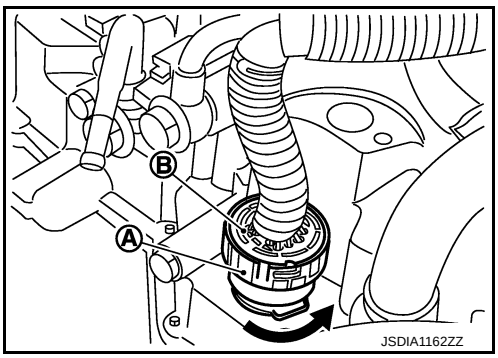


### INSTALLATION

1. Align marking (A) on CVT unit harness connector terminal with marking (B) on bayonet ring. Insert CVT unit harness connector.
2. Rotate bayonet ring clockwise.

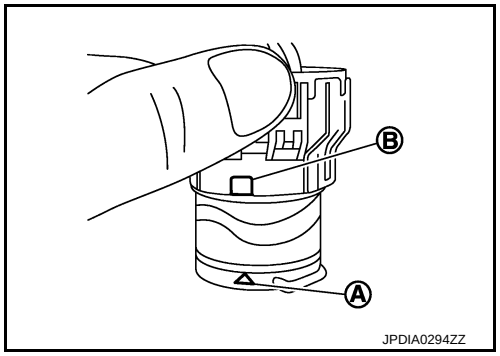


3. Rotate bayonet ring clockwise until marking (A) on CVT unit harness connector terminal body is aligned with the slit (B) on bayonet ring as shown in the figure (correctly fitting condition).

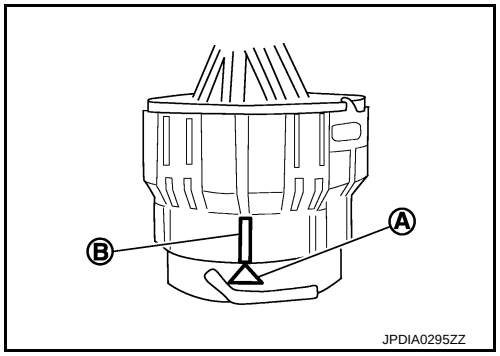


**CAUTION:**
- **Securely align marking (A) on CVT unit harness connector terminal body with bayonet ring slit (B). Then, be careful not to make a half fit condition as shown in the figure.**
- **Never mistake the slit of bayonet ring for other dent portion.**

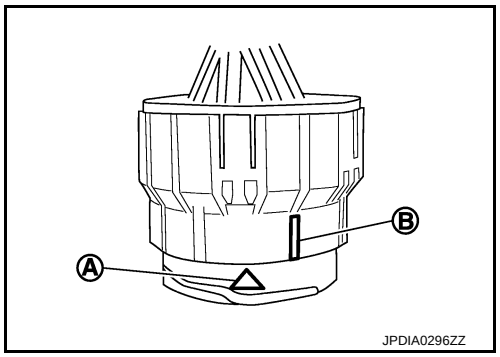


## Service Notice or Precaution

INFOID:0000000009949067

### OBD-II SELF-DIAGNOSIS

- CVT self-diagnosis is performed by the TCM in combination with the ECM. The results can be read through the blinking pattern of the Malfunction Indicator Lamp (MIL). Refer to the table on TM-99, "CONSULT Function" for the indicator used to display each self-diagnostic result.
- The self-diagnostic results indicated by the MIL are automatically stored in both the ECM and TCM memories.
  **Always perform the procedure on TM-98, "Diagnosis Description" to complete the repair and avoid unnecessary blinking of the MIL.**

For details of OBD-II, refer to EC-101, "Diagnosis Description".

- **Certain systems and components, especially those related to OBD, may use the new style slide-locking type harness connector. For description and how to disconnect, refer to PG-72.**

## ATFTEMP COUNT Conversion Table

INFOID:0000000009949068

| ATFTEMP COUNT | Temperature °C (°F) | ATFTEMP COUNT | Temperature °C (°F) |
|---|---|---|---|
| 4 | –30 (–22) | 177 | 90 (194) |
| 8 | –20 (–4) | 183 | 95 (203) |
| 13 | –10 (14) | 190 | 100 (212) |

| ATFTEMP COUNT | Temperature °C (°F) | ATFTEMP COUNT | Temperature °C (°F) |
|---|---|---|---|
| 17 | –5 (23) | 196 | 105 (221) |
| 21 | 0 (32) | 201 | 110 (230) |
| 27 | 5 (41) | 206 | 115 (239) |
| 32 | 10 (50) | 210 | 120 (248) |
| 39 | 15 (59) | 214 | 125 (257) |
| 47 | 20 (68) | 218 | 130 (266) |
| 55 | 25 (77) | 221 | 135 (275) |
| 64 | 30 (86) | 224 | 140 (284) |
| 73 | 35 (95) | 227 | 145 (293) |
| 83 | 40 (104) | 229 | 150 (302) |
| 93 | 45 (113) | 231 | 155 (311) |
| 104 | 50 (122) | 233 | 160 (320) |
| 114 | 55 (131) | 235 | 165 (329) |
| 124 | 60 (140) | 236 | 170 (338) |
| 134 | 65 (149) | 238 | 175 (347) |
| 143 | 70 (158) | 239 | 180 (356) |
| 152 | 75 (167) | 241 | 190 (374) |
| 161 | 80 (176) | 243 | 200 (392) |
| 169 | 85 (185) | — | — |

# PREPARATION

## PREPARATION

### Special Service Tools

INFOID:0000000009949069

The actual shapes of Kent-Moore tools may differ from those of special service tools illustrated here.

| Tool number<br>(Kent-Moore No.)<br>Tool name | | Description |
|---|---|---|
| —<br>(OTC3492)<br>Oil pressure gauge set | 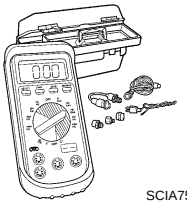 <br>SCIA7531E | Measuring line pressure |
| KV38107900<br>( — )<br>Protector<br>a: 32 mm (1.26 in) dia. | 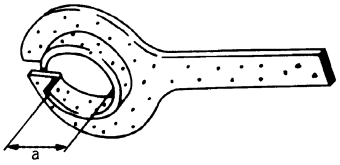 <br>PDIA1183J | Installing drive shaft |
| ST35325000<br>( — )<br>KV31103000<br>( — )<br>Drift<br>a: 70 mm (2.75 in) dia.<br>b: 59 mm (2.32 in) dia.<br>c: 49 mm (1.92 in) dia. | 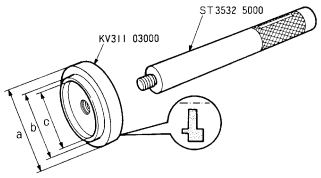 <br>ZZA0501D | Installing differential side oil seal |

### Commercial Service Tools

INFOID:0000000009949070

| Tool name | Description |
|---|---|
| Power tool<br> 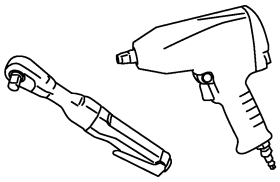 <br>PBIC0190E | Loosening nuts and bolts |

# PERIODIC MAINTENANCE

## CVT FLUID

### Inspection

INFOID:0000000009949071

#### Level check

Check fluid level in HOT state [CVT fluid temperature is between 50 to 80°C (122 to 176°F)], according to the following procedures.

1. Visually check that CVT fluid leakage from transaxle assembly is not detected.
2. After engine warms up, drive the vehicle in an urban area for approximately 10 minutes.
   **NOTE:**
   When ambient temperature is 20°C (68°F), driving vehicle for approximately 10 minutes in an urban area ordinarily warms up CVT fluid temperature between 50 to 80°C (122 to 176°F).
3. Park the vehicle on a level surface.
4. Fully apply parking brake.
5. Adjust engine speed at idle state.
6. Shift selector lever through entire position from “P” to “D” while depressing brake pedal.
7. Press claw of CVT fluid level gauge lock to unlock.
8. Remove CVT fluid level gauge from CVT fluid charging pipe.
9. Wipe CVT fluid that is on CVT fluid level gauge.
   **CAUTION:**
   **Always use shop paper when wiping off CVT fluid that is on CVT fluid level gauge.**

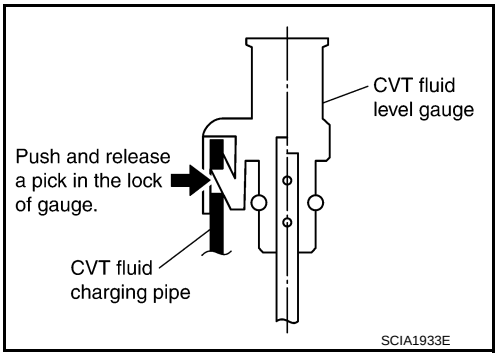


10. Rotate CVT fluid level gauge 180° from installed state.
11. Inset CVT fluid level gauge until it contacts CVT fluid charging pipe end.

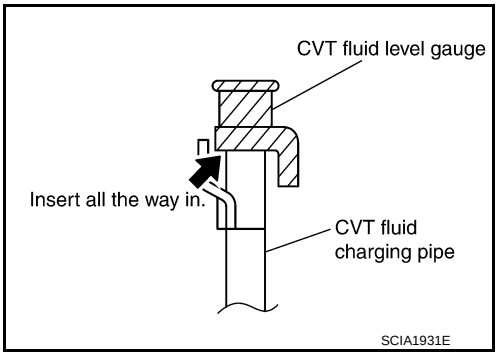


12. Check that CVT fluid level is within the specified level of CVT fluid level gauge (MAX side).

**CAUTION:**

- **After level check, when returning CVT fluid level gauge to the original state, insert CVT fluid level gauge to CVT fluid charging pipe until it is locked.**
- **Always use shop paper when wiping off CVT fluid that is on CVT fluid level gauge.**

#### CVT FLUID CONDITION

Check CVT fluid condition.

- If CVT fluid is very dark or smells burned, check operation of transaxle assembly. Flush cooling system after repair of transaxle assembly.
- If CVT fluid contains frictional material (clutches, brakes, etc.), replace radiator and flush cooler line using cleaning solvent and compressed air after repair of transaxle assembly. Refer to TM-231, "CVT FLUID COOLER HOSE : Exploded View".

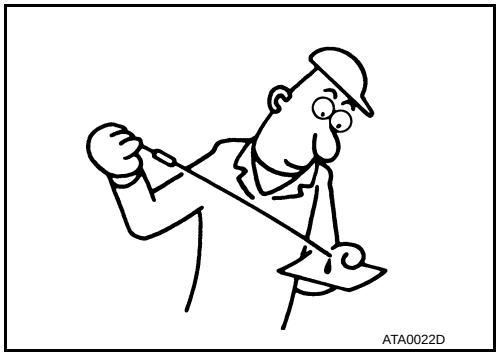


| Fluid status | Conceivable cause | Required operation |
|---|---|---|
| Varnished (viscous varnish state) | CVT fluid become degraded due to high temperatures | • Replace the CVT fluid.<br>• Check the transaxle assembly and the vehicle for malfunctions (wire harnesses, cooler pipes, etc.) |
| Milky white or cloudy | Water in the fluid | • Replace the CVT fluid.<br>• Check for places where water is getting in. |
| Large amount of metal powder mixed in | Unusual wear of sliding parts within transaxle assembly | • Replace the CVT fluid.<br>• Check for improper operation of the transaxle assembly. |

## Changing

INFOID:0000000009949072

1. Remove drain plug from oil pan and then the CVT fluid.
2. Remove drain plug gasket from drain plug.
3. Install drain plug gasket to drain plug.
   **CAUTION:**
   **Never reuse drain plug gasket.**
4. Install drain plug to oil pan.

   : TM-225, "Exploded View"

5. Fill CVT fluid from CVT fluid charging pipe to the specified level.

   **CVT fluid and fluid capacity** : MA-10, "Fluids and Lubricants"

   **CAUTION:**
   - **Always use the specified fluid. If use, misuse, or mixing of fluid other than the specified fluid occurs, original performance cannot be obtained or it may cause serious malfunctions.**
   - **CVT fluid is not reusable. Never reuse CVT fluid.**
   - **Always use shop paper. Never use shop cloth.**
   - **After replacement, always perform CVT fluid leakage check.**
   - **Delete CVT fluid deterioration date with CONSULT after changing CVT fluid.**
6. After engine warms up, drive the vehicle in an urban area for approximately 10 minutes.
   **NOTE:**
   When ambient temperature is 20°C (68°F), it takes about 10 minutes for the CVT fluid to warm up to 50 to 80°C (122 to 176°F).
7. Check CVT fluid level and condition. Refer to TM-206, "Inspection".
8. Repeat steps 1 to 6 if CVT fluid has been contaminated.

# STALL TEST

## Inspection and Judgment

INFOID:0000000009949073

### INSPECTION

1. Inspect the amount of engine oil. Replenish the engine oil if necessary. Refer to LU-8, "Inspection".
2. After engine warms up, drive the vehicle in an urban area for approximately 10 minutes.
   **NOTE:**
   When ambient temperature is 20°C (68°F), it takes about 10 minutes for the CVT fluid to warm up to 50 to 80°C (122 to 176°F).
3. Inspect the amount of CVT fluid. Replenish if necessary.
4. Securely engage parking brake so that the tires do not turn.
5. Start the engine.
6. Apply foot brake, and shift selector lever to “D” position.
7. Gradually press down accelerator pedal while holding down the foot brake.
8. Quickly read off the stall speed, and then quickly remove your foot from accelerator pedal.
   **CAUTION:**
   **Never hold down accelerator pedal for more than 5 seconds during this test.**

   **Stall speed** : **TM-240, "Stall Speed"**
9. Shift selector lever to “N” position.
10. Cool down the CVT fluid.
    **CAUTION:**
    **Run the engine at idle for at least 1 minute.**
11. Repeat steps 7 through 10 with selector lever in “R” position.

### JUDGMENT

| | Selector lever position | | Expected problem location |
|---|---|---|---|
| | “D” | “R” | |
| Stall rotation | H | O | • Forward clutch |
| | O | H | • Reverse brake |
| | L | L | • Engine and torque converter one-way clutch<br>• Accelerator pedal position sensor |
| | H | H | • Line pressure low<br>• Primary pulley<br>• Secondary pulley<br>• Steel belt |

- O: Stall speed within standard value position.
- H: Stall speed is higher than standard value.
- L: Stall speed is lower than standard value.

# LINE PRESSURE TEST

## Inspection and Judgment

INFOID:0000000009949074

### INSPECTION

1. Inspect the amount of engine oil. Replenish the engine oil if necessary. Refer to LU-8, "Inspection".
2. After engine warms up, drive the vehicle in an urban area for approximately 10 minutes.
   **NOTE:**
   When ambient temperature is 20°C (68°F), it takes about 10 minutes for the CVT fluid to warm up to 50 to 80°C (122 to 176°F).
3. Inspect the amount of CVT fluid. Replenish if necessary.
4. Remove oil pressure detection plug (A).
5. Install oil pressure gauge [special service tool: — (OTC3492)].
   **NOTE:**
   When using oil pressure gauge, be sure to use O-ring attached to oil pressure detection plug.
6. Securely engage parking brake so that the tires do not turn.
7. Start the engine.
8. Measure the line pressure at both idle and the stall speed.
   **CAUTION:**
   **Keep brake pedal pressed all the way down during measurement.**

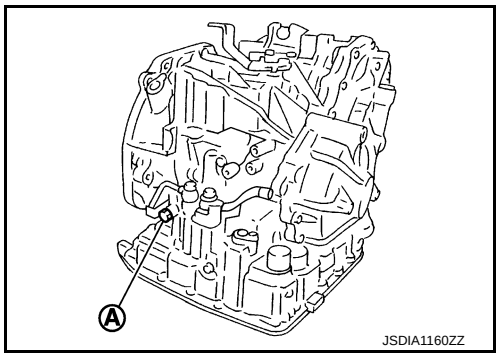


**Line pressure : TM-240, "Line Pressure"**

9. Install O-rig to oil pressure detection plug.
   **CAUTION:**
   - **Never reuse O-ring.**
   - **Apply CVT fluid to O-ring.**
10. Install oil pressure detection plug.

**: 7.5 N·m (0.77 kg-m, 66 in-lb)**

### JUDGMENT

| Judgment | | Possible cause |
|---|---|---|
| Idle speed | Low for all positions (“P”, “R”, “N”, “D”, “L”) | Possible causes include malfunctions in the pressure supply system and low oil pump output.<br>For example<br>• Oil pump wear<br>• Pressure regulator valve or plug sticking or spring fatigue<br>• Oil strainer ⇒ oil pump ⇒ pressure regulator valve passage oil leak<br>• Engine idle speed too low |
| | Only low for a specific position | Possible causes include an oil pressure leak in a passage or device related to the position after the pressure is distributed by the manual valve. |
| | High | Possible causes include a sensor malfunction or malfunction in the line pressure adjustment function.<br>For example<br>• Accelerator pedal position signal malfunction<br>• CVT fluid temperature sensor malfunction<br>• Line pressure solenoid malfunction (sticking in OFF state, filter clog, cut line)<br>• Pressure regulator valve or plug sticking |

| Judgment | | Possible cause |
|---|---|---|
| Stall speed | Line pressure does not rise higher than the line pressure for idle. | Possible causes include a sensor malfunction or malfunction in the pressure adjustment function.<br>For example<br>• Accelerator pedal position signal malfunction<br>• TCM malfunction<br>• Line pressure solenoid malfunction (shorting, sticking in ON state)<br>• Pressure regulator valve or plug sticking |
| | The pressure rises, but does not enter the standard position. | Possible causes include malfunctions in the pressure supply system and malfunction in the pressure adjustment function.<br>For example<br>• Accelerator pedal position signal malfunction<br>• Line pressure solenoid malfunction (sticking, filter clog)<br>• Pressure regulator valve or plug sticking |
| | Only low for a specific position | Possible causes include an oil pressure leak in a passage or device related to the position after the pressure is distributed by the manual valve. |

# ROAD TEST

## Description

INFOID:0000000009949075

### DESCRIPTION

- The purpose of the test is to determine the overall performance of CVT and analyze causes of problems.
- The road test consists of the following three parts:

1. “Check Before Engine Is Started”
2. “Check at Idle”
3. “Cruise Test”

- Before the road test, familiarize yourself with all test procedures and items to check.
- Perform tests for all the check items until a malfunction phenomenon is detected. Perform diagnosis for NG items after the completion of road tests. Refer to TM-188, "Symptom Table".

## Check before Engine Is Started

INFOID:0000000009949076

### 1.CHECK SHIFT POSITION INDICATOR

1. Park vehicle on level surface.
2. Shift selector lever to “P” position.
3. Turn ignition switch OFF.
4. Wait at least 5 seconds.
5. Turn ignition switch ON.

**CAUTION:**
**Never start the engine.**

Has shift position indicator been turned ON for about 2 seconds?

YES >> GO TO 2.
NO >> 1. Stop “Road Test”.
2. Perform self-diagnosis. Refer to TM-188, "Symptom Table".

### 2.CHECK OD OFF INDICATOR LAMP

1. Turn ignition switch OFF.
2. Wait at least 5 seconds.
3. Turn ignition switch ON.

**CAUTION:**
**Never start the engine.**

Has OD OFF indicator lamp been turned ON for about 2 seconds?

YES >> 1. Turn ignition switch OFF.
2. Go to TM-211, "Check at Idle".
NO >> 1. Stop “Road Test”.
2. Perform self-diagnosis. Refer to TM-188, "Symptom Table".

## Check at Idle

INFOID:0000000009949077

### 1.CHECK STARTING THE ENGINE (PART 1)

1. Park vehicle on level surface.
2. Shift selector lever to “P” or “N” position.
3. Turn ignition switch OFF.
4. Turn ignition switch to “START” position.

Is engine started?

YES >> GO TO 2.
NO >> 1. Stop “Road Test”.
2. Perform self-diagnosis. Refer to TM-188, "Symptom Table".

### 2.CHECK STARTING THE ENGINE (PART 2)

1. Turn ignition switch ON.
2. Shift selector lever to “D” or “R” position.

3. Turn ignition switch to “START” position.

Does engine start with selector lever in one of these positions?

YES >> 1. Stop “Road Test”.
2. Perform self-diagnosis. Refer to TM-188, "Symptom Table".

NO >> GO TO 3.

## 3. CHECK “P” POSITION FUNCTION

1. Shift selector lever to “P” position.
2. Turn ignition switch OFF.
3. Release parking brake.
4. Push vehicle forward or backward.

Does the vehicle move when it is pushed?

YES >> 1. Apply parking brake.
2. Record malfunction symptoms.
3. GO TO 4.

NO >> 1. Apply parking brake.
2. GO TO 4.

## 4. CHECK “N” POSITION FUNCTION

1. Start the engine.
2. Shift selector lever to “N” position.
3. Release parking brake.

Does vehicle move?

YES >> 1. Record malfunction symptoms.
2. GO TO 5.

NO >> GO TO 5.

## 5. CHECK SHIFT SHOCK

1. Apply foot brake.
2. Shift selector lever from “N” to “R” position.

Is an excessive shock detected?

YES >> 1. Record malfunction symptoms.
2. GO TO 6.

NO >> GO TO 6.

## 6. CHECK “R” POSITION FUNCTION

Release foot brake pedal for several seconds.

Does vehicle back up?

YES >> GO TO 7.

NO >> 1. Record malfunction symptoms.
2. GO TO 7.

## 7. CHECK “D” POSITION FUNCTION

Shift selector lever to “D” position.

Does the vehicle move forward?

YES >> Go to TM-212, "Cruise Test".

NO >> 1. Stop “Road Test”.
2. Perform self-diagnosis. Refer to TM-188, "Symptom Table".

# Cruise Test

INFOID:0000000009949078

**CAUTION:**

**Always drive vehicle at a safe speed.**

## 1. CHECK VEHICLE SPEED WHEN SHIFTING GEARS (PART 1)

1. Drive vehicle for approximately 10 minutes to warm engine oil and CVT fluid up to operating temperature.
   CVT fluid operating temperature: 50 – 80°C (122 – 176°F)
2. Park vehicle on level surface.
3. Shift selector lever to “P” position.

4. Start the engine.
5. Shift selector lever to “D” position.
6. Accelerate vehicle at 2/8 throttle opening.
7. Check “Vehicle Speed When Shifting Gears”. Refer to TM-240, "Vehicle Speed When Shifting Gears".

With CONSULT
- Read “ACC PEDAL OPEN”, “VEHICLE SPEED” and “ENG SPEED”.

Is the inspection result normal?

YES >> GO TO 2.
NO >> 1. Record malfunction symptoms.
2. GO TO 2.

## 2. CHECK VEHICLE SPEED WHEN SHIFTING GEARS (PART 2)

1. Park vehicle on level surface.
2. Shift selector lever to “D” position.
3. Accelerate vehicle at 8/8 throttle opening.
4. Check “Vehicle Speed When Shifting Gears”. Refer to TM-240, "Vehicle Speed When Shifting Gears".

With CONSULT
- Read “ACC PEDAL OPEN”, “VEHICLE SPEED” and “ENG SPEED”.

Is the inspection result normal?

YES >> GO TO 3.
NO >> 1. Record malfunction symptoms.
2. GO TO 3.

## 3. CHECK OVERDRIVE OFF CONDITION (PART 1)

1. Park vehicle on level surface.
2. Push overdrive control switch.
3. Accelerate vehicle at 2/8 throttle opening.
4. Check “Vehicle Speed When Shifting Gears”. Refer to TM-240, "Vehicle Speed When Shifting Gears".

With CONSULT
- Read “ACC PEDAL OPEN”, “VEHICLE SPEED” and “ENG SPEED”.

Is the inspection result normal?

YES >> GO TO 4.
NO >> 1. Record malfunction symptoms.
2. GO TO 4.

## 4. CHECK OVERDRIVE OFF CONDITION (PART 2)

1. Park vehicle on level surface.
2. Push overdrive control switch.
3. Accelerate vehicle at 8/8 throttle opening.
4. Check “Vehicle Speed When Shifting Gears”. Refer to TM-240, "Vehicle Speed When Shifting Gears".

With CONSULT
- Read “ACC PEDAL OPEN”, “VEHICLE SPEED” and “ENG SPEED”.

Is the inspection result normal?

YES >> GO TO 5.
NO >> 1. Record malfunction symptoms.
2. GO TO 5.

## 5. CHECK “L” POSITION FUNCTION (PART 1)

1. Park vehicle on level surface.
2. Shift selector lever to “L” position.
3. Accelerate vehicle at 2/8 throttle opening.
4. Check “Vehicle Speed When Shifting Gears”. Refer to TM-240, "Vehicle Speed When Shifting Gears".

With CONSULT
- Read “ACC PEDAL OPEN”, “VEHICLE SPEED” and “ENG SPEED”.

Is the inspection result normal?

YES >> GO TO 6.
NO >> 1. Record malfunction symptoms.
2. GO TO 6.

## 6. CHECK “L” POSITION FUNCTION (PART 2)

1. Park vehicle on level surface.
2. Shift selector lever to “L” position.
3. Accelerate vehicle at 8/8 throttle opening.
4. Check “Vehicle Speed When Shifting Gears”. Refer to TM-240, "Vehicle Speed When Shifting Gears".

With CONSULT

- Read “ACC PEDAL OPEN”, “VEHICLE SPEED” and “ENG SPEED”.

Is the inspection result normal?

YES >> GO TO 7.
NO >> 1. Record malfunction symptoms.
2. GO TO 7.

## 7. CHECK ENGINE BRAKE FUNCTION

Check engine brake.

Does engine braking effectively reduce vehicle speed in “L” position?

YES >> 1. Stop vehicle.
2. Perform “Self Diagnostic Results” in “TRANSMISSION”.
NO >> 1. Record malfunction symptoms.
2. Perform self-diagnosis. Refer to TM-188, "Symptom Table".

# CVT POSITION

## Inspection and Adjustment

INFOID:0000000009949079

### Inspection

1. Shift selector lever to “P” position, and turn ignition switch ON.
2. Check that selector lever can be shifted to other than “P” position when brake pedal is depressed. Also check that selector lever can be shifted from “P” position only when brake pedal is depressed.
3. Shift selector lever and check for excessive effort, sticking, noise or rattle.
4. Check that selector lever stops at each position with the feel of engagement when it is shifted through all the positions. Check that the actual position of selector lever matches the position shown by shift position indicator and manual lever on the transaxle.
5. The method of operating selector lever to individual positions correctly should be as shown.

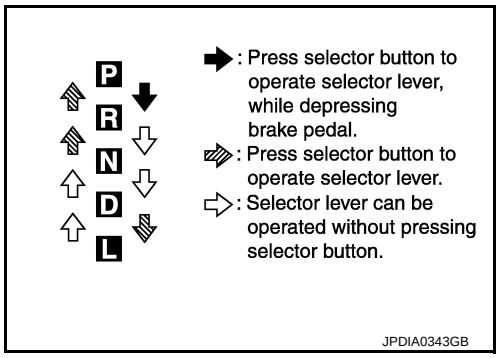


6. When selector button is pressed in “P”, “R”, “N”, “D” or “L” position without applying forward/backward force to selector lever, check button operation for sticking.
7. Check that back-up lamps illuminate only when selector lever is placed in the “R” position.
8. When in “R” position, check that back-up lamps do not illuminate even when the selector lever is in the “P” position.
   **CAUTION:**
   **Check the lighting without pressing shift button.**
9. Check that back-up lamps do not illuminate when selector lever is pushed toward the “R” position when in the “P” or “N” position.
   **CAUTION:**
   **Check the lighting without pressing shift button.**
10. Check that the engine can only be started with selector lever in the “P” and “N” positions.
11. Check that transaxle is locked completely in “P” position.

### Adjustment

1. Shift selector lever to “P” position.
   **CAUTION:**
   **Be sure to turn the wheels 1/4 turn or more and apply the park lock.**
2. Remove lock nut (⬅) to release control cable (1).

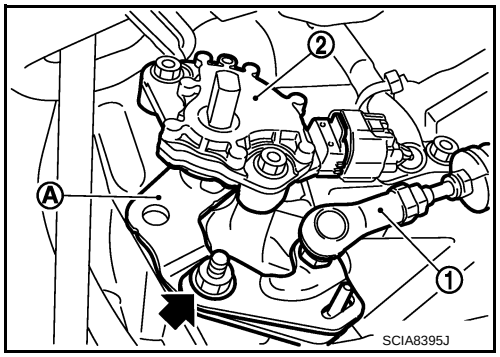


   2 : Transmission range switch
3. Place manual lever (A) to “P” position.
4. Release control cable and temporarily tighten lock nut.
5. Tighten lock nut to the specified torque. Refer to TM-219, "Exploded View".
   **CAUTION:**
   **Never apply force (Especially forward and rearward) to manual lever when tightening lock nut.**
6. Check CVT position.

# REMOVAL AND INSTALLATION

## CVT SHIFT SELECTOR

### Exploded View

INFOID:0000000009949080

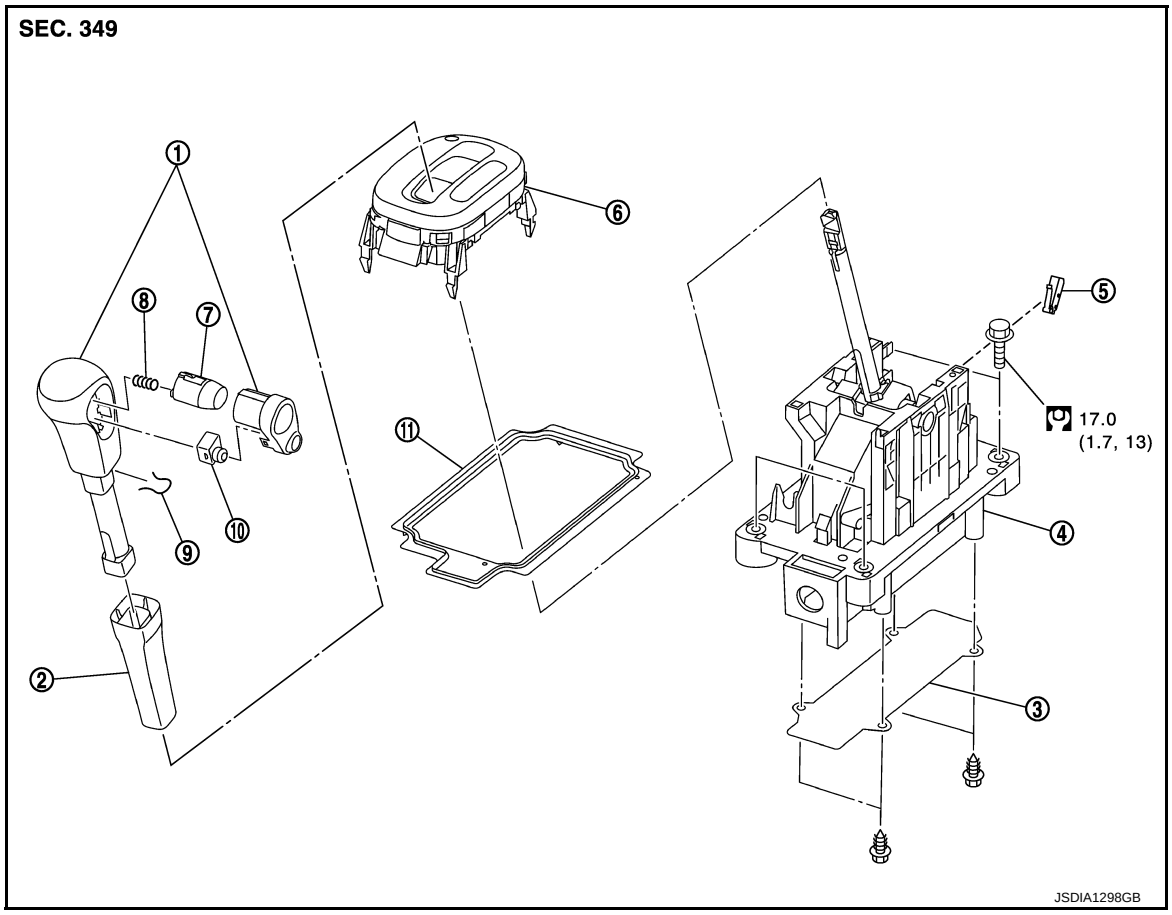


| | | | | | |
|---|---|---|---|---|---|
| 1. | Selector lever knob | 2. | Knob cover | 3. | Plate |
| 4 | CVT shift selector | 5. | Park position switch | 6. | Position indicator plate |
| 7. | Selector button | 8. | Selector button return spring | 9. | Lock pin |
| 10. | Overdrive control switch | 11. | Dust cover | | |

Refer to GI-4, "Components" for symbols in the figure.

### Removal and Installation

INFOID:0000000009949081

REMOVAL

**CAUTION:**

**Make sure that parking brake is applied before removal and installation.**

1. Disconnect the battery cable from the negative terminal. Refer to PG-82, "Removal and Installation".
2. Shift selector lever knob in “N” position.
3. Slide knob cover downward.
   **CAUTION:**
   **Be careful not to damage selector lever knob.**
4. Pull out lock pin from selector lever knob.
5. Remove selector lever knob and knob cover as a set from selector lever.
   **CAUTION:**
   **Never press selector button.**
6. Remove center console assembly. Refer to IP-23, "Exploded View".

7. Disconnect CVT shift selector connector.
8. Disconnect key interlock cable from CVT shift selector assembly. Refer to TM-221, "Exploded View". (Without intelligent Key system)
9. Remove the bolts from the CVT shift selector assembly.
10. Remove exhaust front tube, center muffler and heat plates. Refer to EX-5, "Exploded View".
11. Remove the plate from the CVT shift selector assembly.
12. Remove the lock plate from the control cable. Refer to TM-219, "Exploded View".
13. Remove control cable from the CVT shift selector assembly. Refer to TM-219, "Exploded View".
14. Insert flat-bladed screwdrivers at points (A) and (B) as shown, and press both tabs (E) and (F) at the front (C) and rear (D) slightly toward the center of the CVT shift selector assembly to remove the CVT shift selector assembly from the underside of the vehicle.

    ⇦ : Vehicle front

15. Remove CVT shift selector assembly from vehicle.

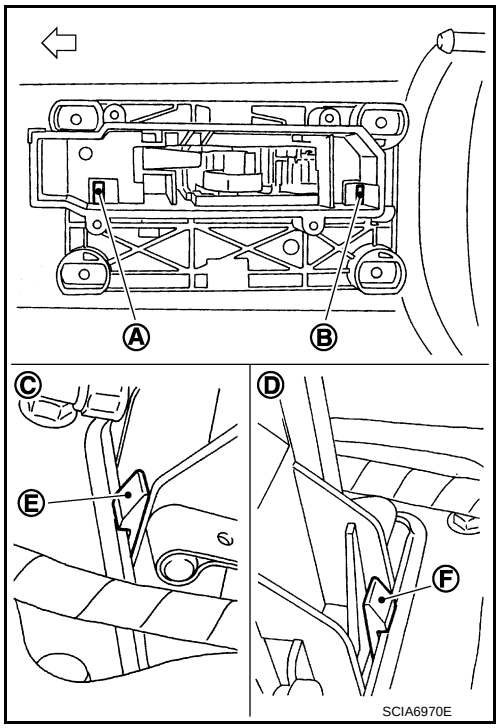


## INSTALLATION

Note the following, and install in the reverse order of removal.

- When installing control cable (1) to CVT shift selector assembly (2), check that control cable is fully pressed in with the ribbed (A) surface facing upward.

  ⇦ : Vehicle front

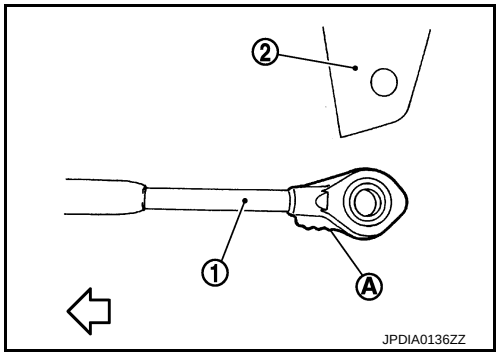


- Refer to the followings when installing the selector lever knob to the CVT shift selector assembly.
- Install the lock pin (1) to the selector lever knob (2).
- Install the knob cover (3) to the selector lever knob.
- Shift selector lever in “N” position.
- Insert the shift lever knob into the shift lever until it clicks.

  **CAUTION:**
  - **Install it straight, and never tap or apply any shock to install it.**
  - **Never press selector button.**

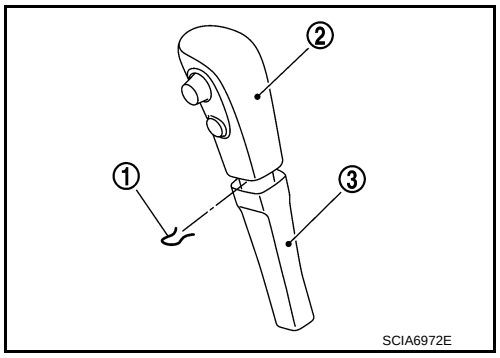

## Disassembly and Assembly

INFOID:0000000009949082

### DISASSEMBLY

1. Remove overdrive control switch, selector lever button, and selector button return spring from selector lever knob.
   **CAUTION:**
   **Be careful not to damage selector lever knob.**
2. Remove dust cover from CVT shift selector assembly.
3. Insert a flat-bladed screwdriver to (A) (at 4 locations) as shown, and bend each hook slightly to raise position indicator plate (1) and remove from CVT shift selector assembly (2).

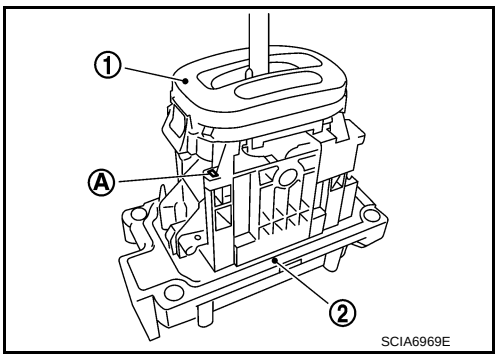


4. Remove park position switch (1) from CVT shift selector assembly.

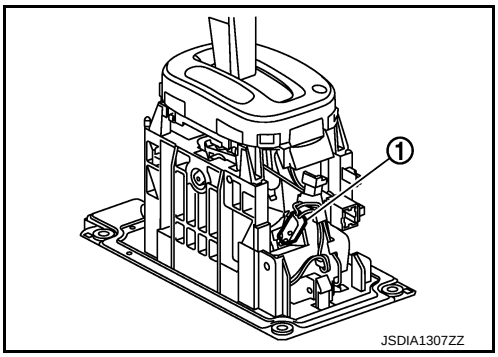


### ASSEMBLY

Assembly is in the reverse order of disassembly.

## Inspection

INFOID:0000000009949083

### INSPECTION AFTER INSTALLATION

Check the CVT position. Refer to TM-215, "Inspection and Adjustment".

# CONTROL CABLE

## Exploded View

INFOID:0000000009949084

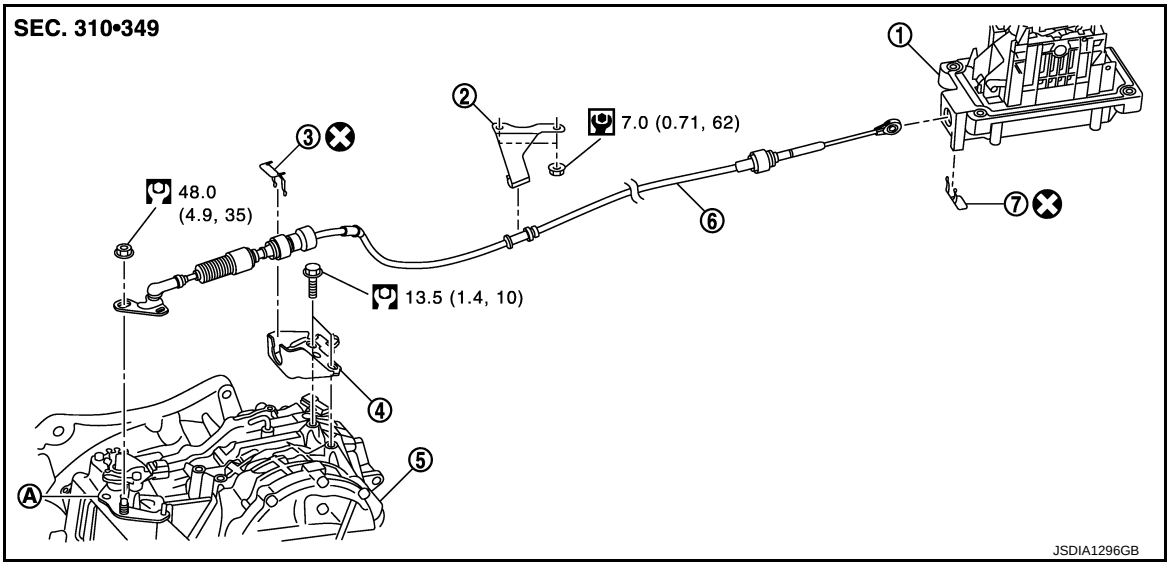


1. CVT shift selector assembly
2. Bracket
3. Lock plate
4. Bracket
5. Transaxle assembly
6. Control cable
7. Lock plate

A. Manual lever

Refer to GI-4, "Components" for symbols in the figure.

## Removal and Installation

INFOID:0000000009949085

### REMOVAL

**CAUTION:**

**Make sure that parking brake is applied before removal/installation.**

1. Remove battery. Refer to PG-82, "Exploded View".
2. Remove air duct (inlet), air duct and air cleaner case. Refer to EM-24, "Exploded View".
3. Remove battery bracket.
4. Remove control cable fitting nut from control cable.
5. Remove lock plate from bracket.
6. Remove control cable from bracket.
7. Remove control cable from CVT shift selector assembly. Refer to TM-219, "Exploded View".
8. Remove control cable from vehicle.
9. Remove bracket.

### INSTALLATION

Note the following, and install in the reverse order of removal.

When installing control cable (1) to CVT shift selector assembly (2), check that control cable is fully pressed in with the ribbed (A) surface facing upward.

⇦ : Vehicle front

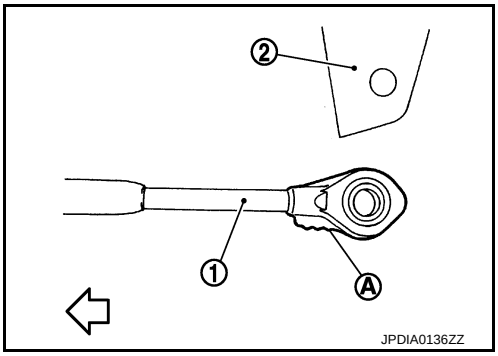


## Inspection

INFOID:0000000009949086

### INSPECTION AFTER INSTALLATION

Check the CVT position. Refer to TM-215, "Inspection and Adjustment".

# KEY INTERLOCK CABLE

## Exploded View

INFOID:0000000009949087

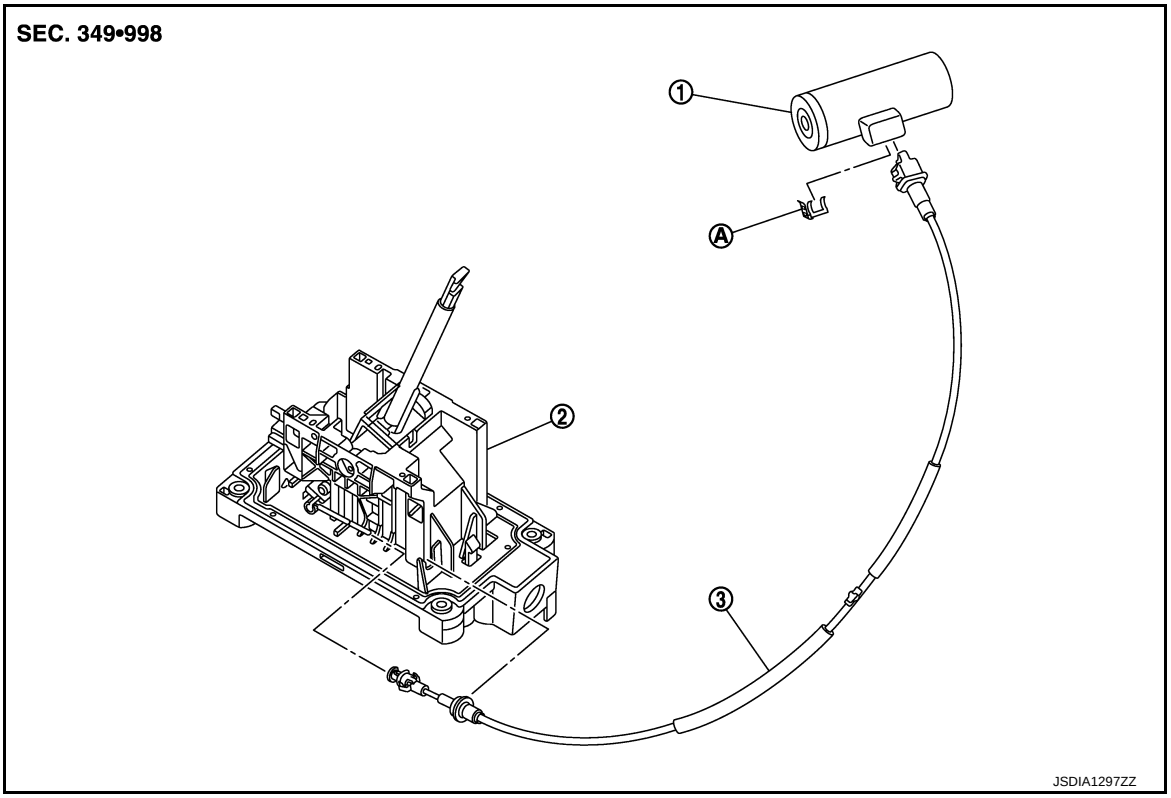


1. Key cylinder
2. CVT shift selector assembly
3. key interlock cable

A. Lock plate

Refer to GI-4, "Components" for symbols in the figure.

## Removal and Installation

INFOID:0000000009949088

### REMOVAL

**CAUTION:**

**Make sure that parking brake is applied before removal/installation.**

1. Remove selector lever knob. Refer to TM-216, "Exploded View".
2. Remove center console. Refer to IP-23, "Exploded View".
3. Slide slider (A) toward casing cap (B) while pressing tabs (C) on slider to separate slider from adjust holder (D).

E : Key interlock rod

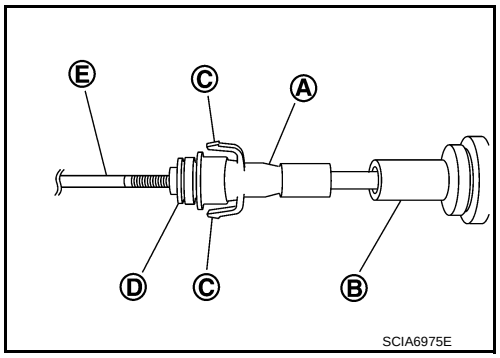


4. Remove steering column cover lower and instrument driver lower panel. Refer to IP-13, "Exploded View".

5. Pull out the lock plate (A) from the holder (B).
6. Remove the key interlock cable (1) from the key cylinder (2).
7. Remove clip and remove key interlock cable.

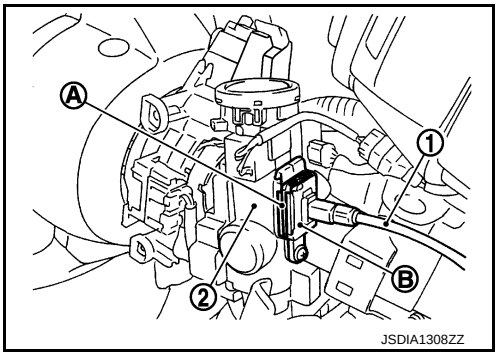


## INSTALLATION

Note the following, and install in the reverse order of removal.

- Temporarily install adjust holder (A) to key interlock rod (B). Install casing cap (C) to cable bracket (D) on CVT shift selector assembly.

  **CAUTION:**
  - **Never bend or twist key interlock cable excessively when installing.**
  - **Check that casing cap is firmly secured in cable bracket on CVT shift selector assembly after installing key interlock cable to cable bracket on CVT shift selector assembly.**

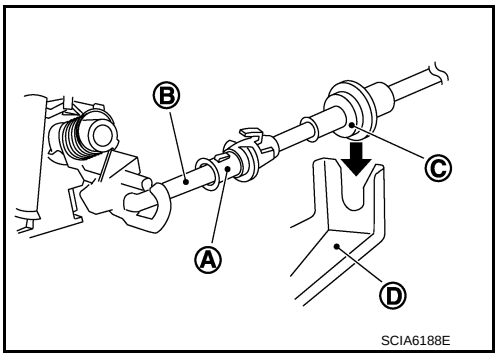


- Slide the slider (A) toward the key interlock rod (D) while pressing the pull lock (B) down to securely connect the adjust holder (C) with the key interlock rod (D).

  **CAUTION:**
  - **Never press tabs when holding slider.**
  - **Never apply any force at a right angle to key interlock rod when sliding.**

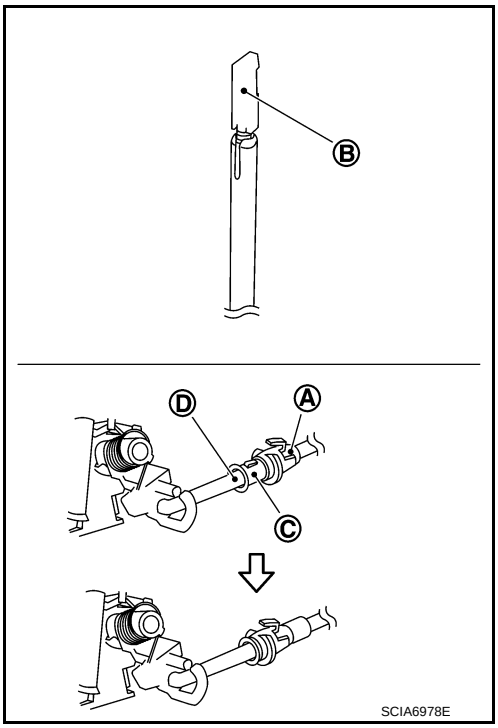


# Inspection

INFOID:0000000009949089

## INSPECTION AFTER INSTALLATION

Check the CVT position. Refer to TM-215, "Inspection and Adjustment".

# TCM

## Exploded View

INFOID:0000000009949090

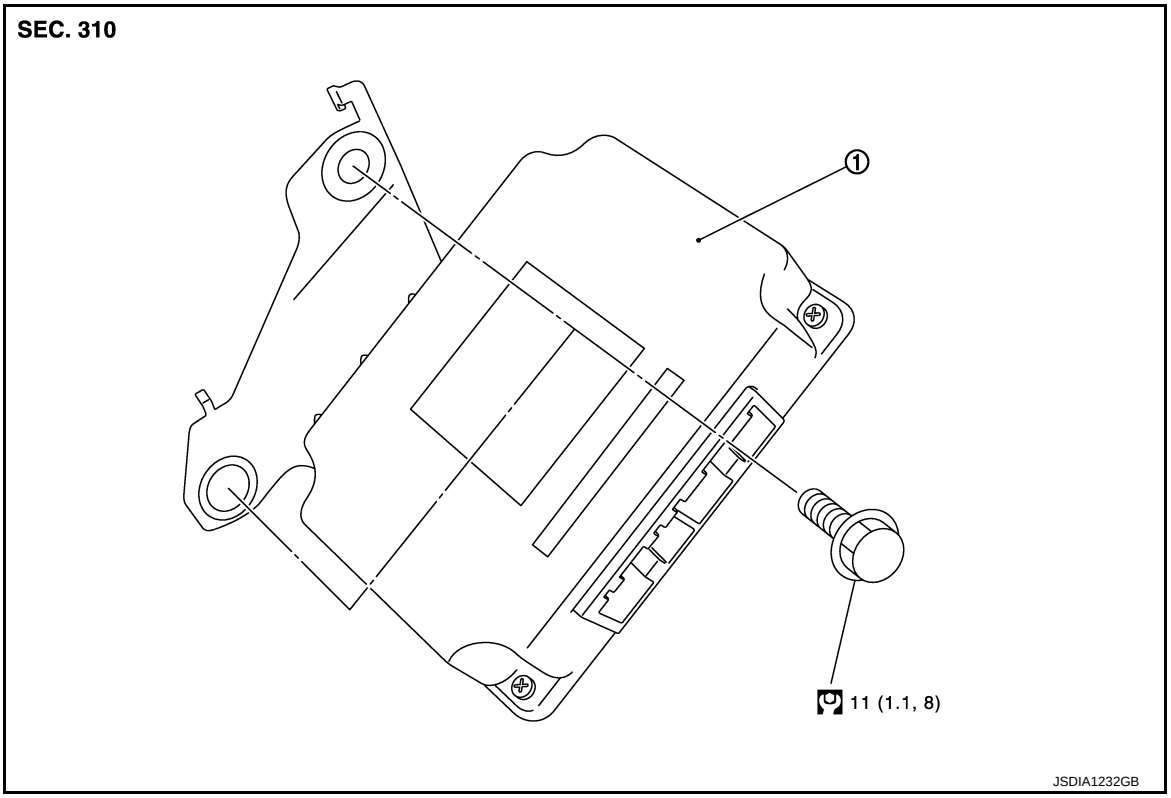


1. TCM

Refer to GI-4, "Components" for symbols in the figure.

## Removal and Installation

INFOID:0000000009949091

### REMOVAL

**CAUTION:**

**When replacing TCM and transaxle assembly as a set, replace transaxle assembly first and then replace TCM. Refer to TM-68, "Description".**

1. Disconnect the battery cable from the negative terminal. Refer to PG-82, "Removal and Installation".
2. Disconnect TCM connector.
3. Remove TCM.

### INSTALLATION

Install in the reverse order of removal.

## Adjustment

INFOID:0000000009949092

### ADJUSTMENT AFTER INSTALLATION

Perform “ADDITIONAL SERVICE WHEN REPLACING TCM”. Refer to TM-67, "Description".

# AIR BREATHER HOSE

## Removal and Installation

INFOID:0000000009949093

### REMOVAL

1. Remove clip from air cleaner assembly.
2. Remove air breather hose from transaxle assembly.

### INSTALLATION

Note the following, and install in the reverse order of removal.

**CAUTION:**

- **Check that air breather hose is not collapsed or blocked due to folding or bending when installed.**
- **Fix clip to mounting hole.**
- **Check that insertion allowance of hose to transaxle tube is end reaches radius curve end.**
- **When inserting air breather hose to transaxle tube, check that paint mark faces vehicle upper side.**

# OIL PAN

## Exploded View

INFOID:0000000009949094

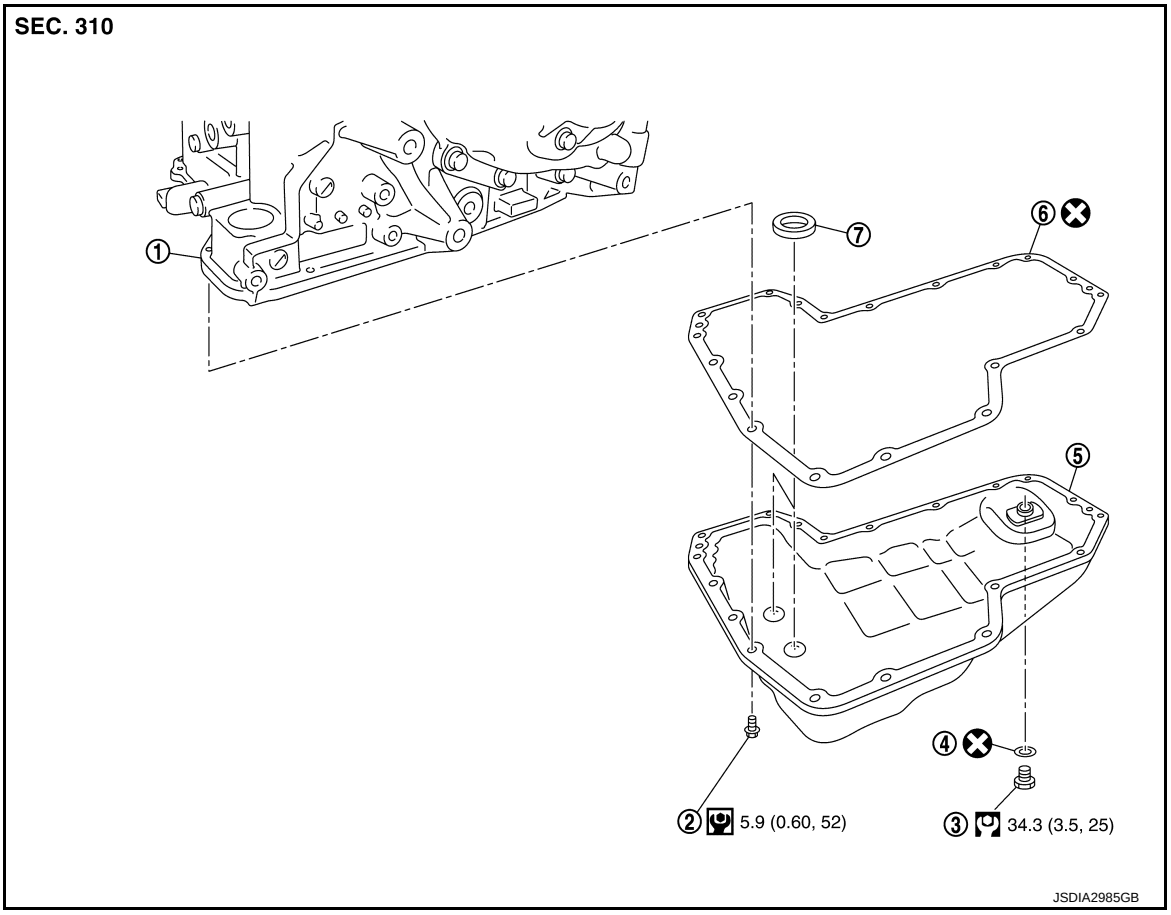


1. Transaxle assembly
2. Oil pan fitting bolt
3. Drain plug
4. Drain plug gasket
5. Oil pan
6. Oil pan gasket
7. Magnet

Refer to GI-4, "Components" for symbols in the figure.

## Removal and Installation

INFOID:0000000009949095

### REMOVAL

1. Remove engine under cover.
2. Remove drain plug from oil pan and then drain the CVT fluid.
3. Remove oil pan fitting bolts (⬅), and then remove oil pan and oil pan gasket.

   ⇦ : Vehicle front

4. Remove magnets from oil pan.

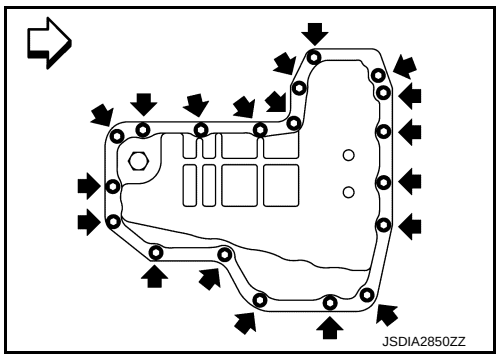


### INSTALLATION

Note the following, and install in the reverse order of removal.

**CAUTION:**
- **Never reuse oil pan gasket and drain plug gasket.**
- **Completely remove all moisture, oil and old gasket, etc. from the oil pan gasket mounting surface of transaxle case and oil pan.**

## Inspection

*INFOID:0000000009949096*

### INSPECTION AFTER REMOVAL

Check oil pan for foreign material.
- If a large amount of worn material is found, clutch plate may be worn.
- If iron powder is found, bearings, gears, or clutch plates may be worn.
- If aluminum powder is found, bushing may be worn, or chips or burrs of aluminum casting parts may enter.

Check points where wear is found in all cases.

### INSPECTION AFTER INSTALLATION

Check for CVT fluid leakage and check CVT fluid level. Refer to TM-206, "Inspection".

# PRIMARY SPEED SENSOR

## Exploded View

INFOID:0000000009949097

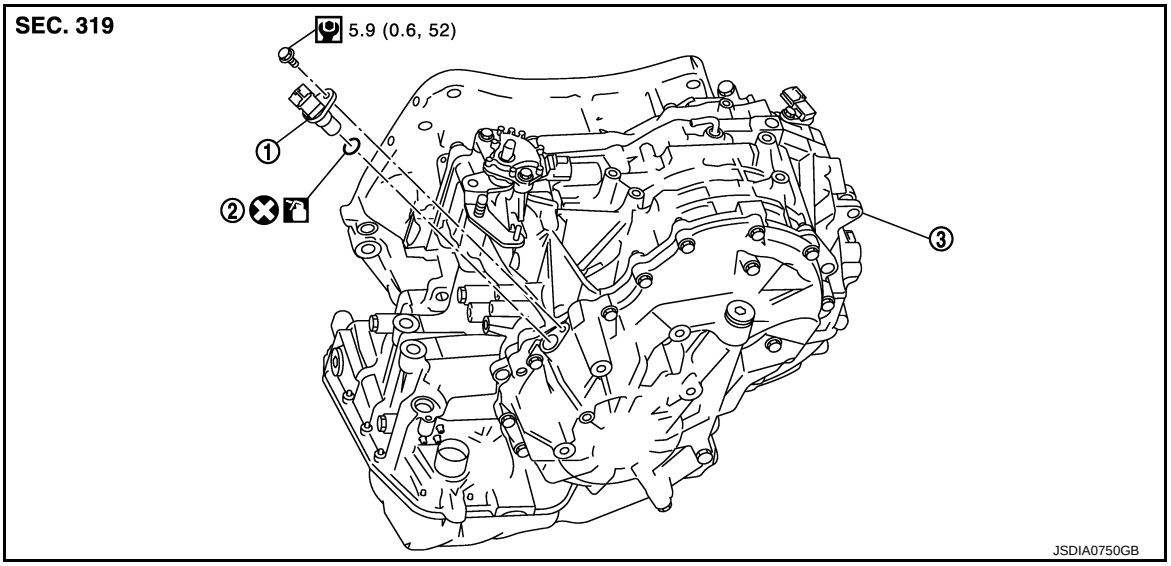


1. Primary speed sensor
2. O-ring
3. Transaxle assembly

: Apply CVT Fluid NS-2.

Refer to GI-4, "Components" for symbols not described above.

## Removal and Installation

INFOID:0000000009949098

### REMOVAL

1. Remove battery. Refer to PG-82, "Exploded View".
2. Remove air duct (inlet), air duct and air cleaner case. Refer to EM-24, "Exploded View".
3. Remove battery bracket.
4. Remove control cable from manual lever. Refer to TM-219, "Exploded View".
5. Place manual lever to “L” position.
6. Disconnect primary speed sensor connector.
7. Remove primary speed sensor.
8. Remove O-ring from primary speed sensor.

### INSTALLATION

Note the following, and install in the reverse order of removal.

**CAUTION:**

- **Never reuse O-ring.**
- **Apply CVT fluid to O-ring.**

## Inspection

INFOID:0000000009949099

### INSPECTION AFTER INSTALLATION

- Check for CVT fluid leakage and check CVT fluid level. Refer to TM-206, "Inspection".
- Check the CVT position. Refer to TM-215, "Inspection and Adjustment".

# SECONDARY SPEED SENSOR

## Exploded View

INFOID:0000000009949100

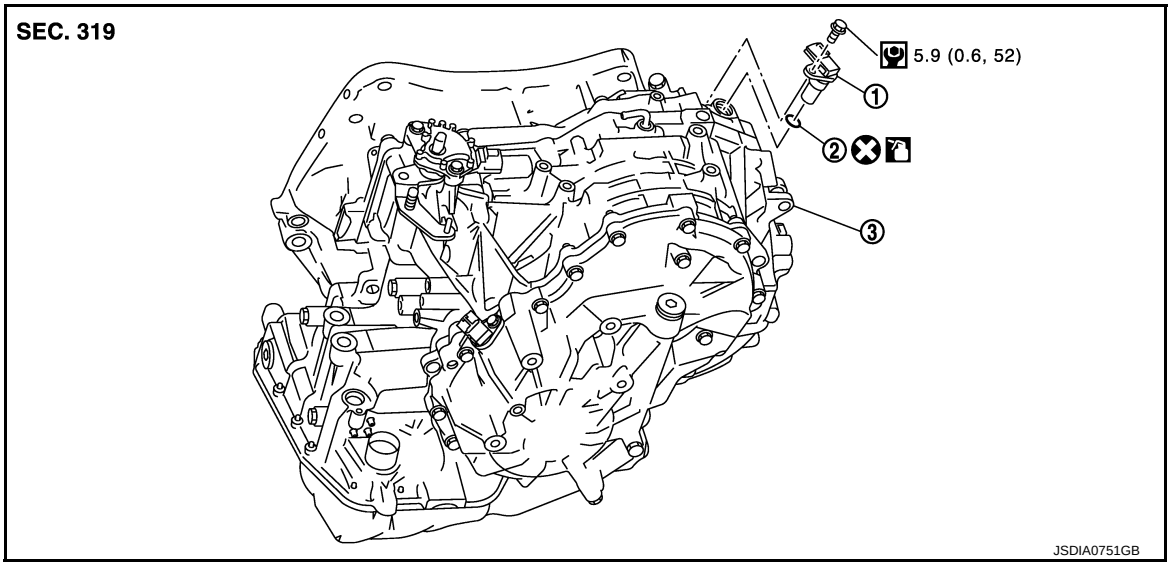


1. Secondary speed sensor
2. O-ring
3. Transaxle assembly

: Apply CVT Fluid NS-2.

Refer to GI-4, "Components" for symbols not described above.

## Removal and Installation

INFOID:0000000009949101

### REMOVAL

1. Remove air duct (inlet). Refer to EM-24, "Exploded View".
2. Disconnect secondary speed sensor connector.
3. Remove secondary speed sensor.
4. Remove O-ring from secondary speed sensor.

### INSTALLATION

Note the following, and install in the reverse order of removal.

**CAUTION:**

- **Never reuse O-ring.**
- **Apply CVT fluid to O-ring.**

## Inspection

INFOID:0000000009949102

### INSPECTION AFTER INSTALLATION

Check for CVT fluid leakage and check CVT fluid level. Refer to TM-206, "Inspection".

# DIFFERENTIAL SIDE OIL SEAL

## Exploded View

INFOID:0000000009949103

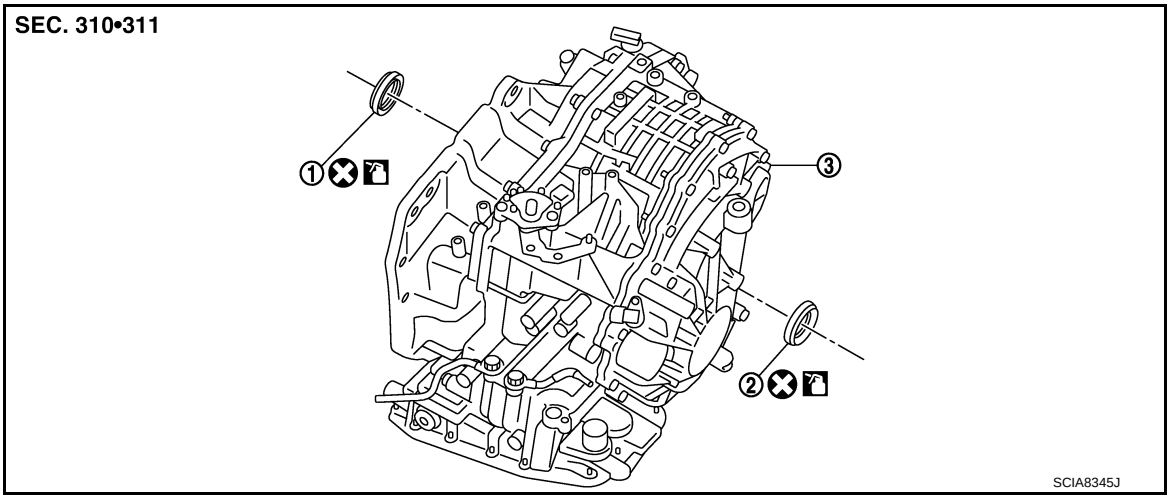


1. RH differential side oil seal
2. LH differential side oil seal
3. Transaxle assembly

: Apply CVT Fluid NS-2.

Refer to GI-4, "Components" for symbols not described above.

## Removal and Installation

INFOID:0000000009949104

### REMOVAL

1. Remove front drive shaft assembly. Refer to FAX-15, "Exploded View".
2. Remove differential side oil seals using a flat-bladed screwdriver.
   **CAUTION:**
   **Be careful not to scratch transaxle case and converter housing.**

### INSTALLATION

Note the following, and install in the reverse order of removal.

**CAUTION:**

- **Never reuse differential side oil seals.**
- **Apply CVT fluid to differential side oil seals.**
- **When insert drive shaft, always use a protector [SST: KV38107900 ( — )]. Refer to FAX-15, "Exploded View".**

Install drive shaft using drifts [SST: ST35325000 ( — ) and KV31103000 ( — )]. Check that side oil seal height difference from case end surface is within the specified value “A” and “B”.

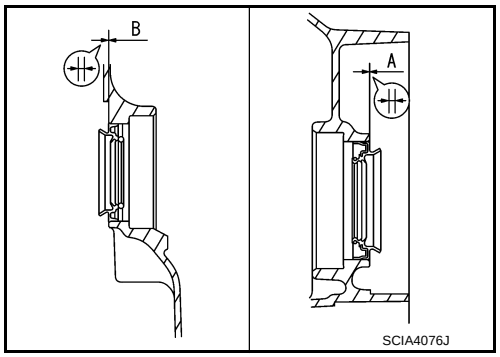


**Dimension “A” : Height difference from case end surface is within 0 ± 0.5 mm (0 ± 0.020 in).**

**Dimension “B” : Height difference from case end surface is within 0 ± 0.5 mm (0 ± 0.020 in).**

**NOTE:**

Differential side oil seal pulling direction is used as the reference.

## Inspection

INFOID:0000000009949105

### INSPECTION AFTER INSTALLATION

Check for CVT fluid leakage and check CVT fluid level. Refer to TM-206, "Inspection".

# CVT OIL WARMER SYSTEM

## WATER HOSE

### WATER HOSE : Exploded View

INFOID:0000000009949106

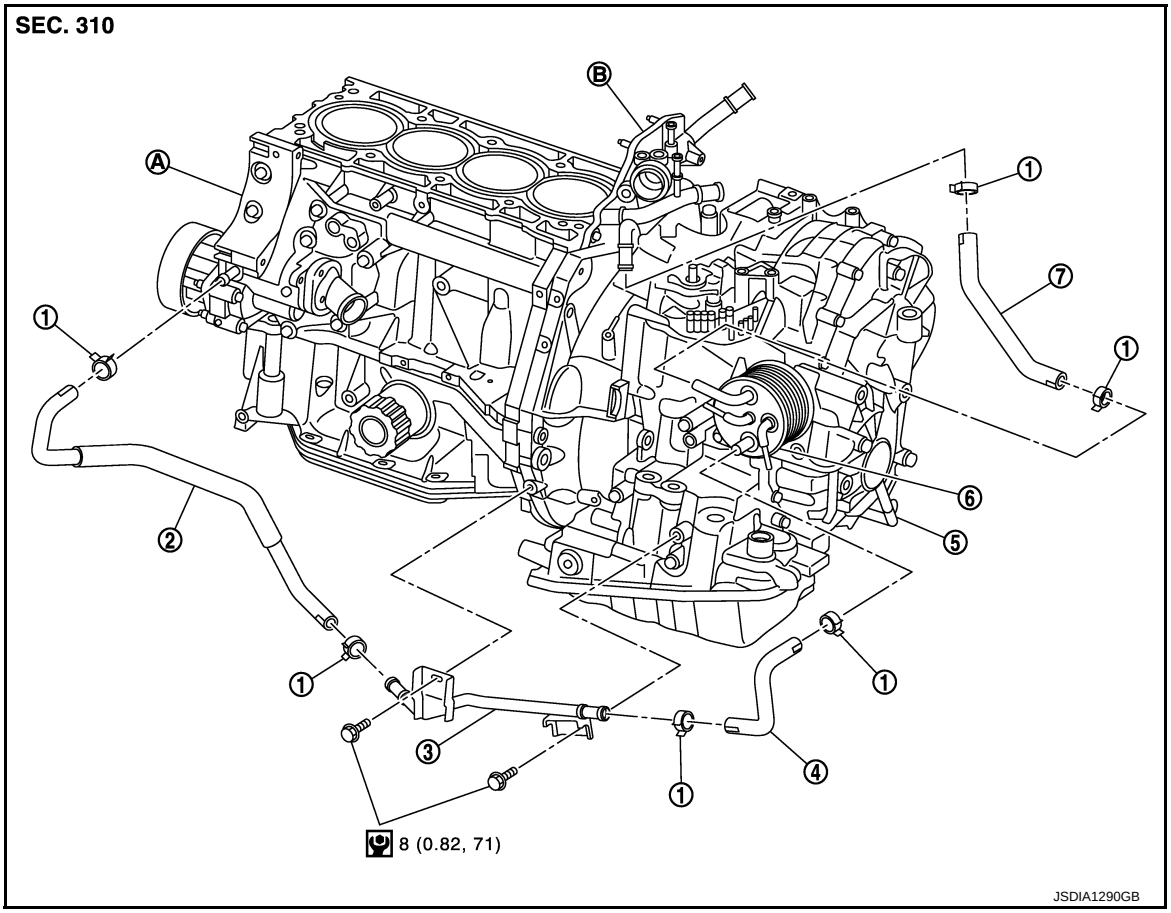


| | | |
|---|---|---|
| 1. Hose clamp | 2. CVT water hose C | 3. CVT water tube |
| 4. CVT water hose B | 5. Transaxle assembly | 6. CVT oil warmer |
| 7. CVT water hose A | | |
| A. Water pump | B. Water inlet-outlet | |

Refer to GI-4, "Components" for symbols in the figure.

### WATER HOSE : Removal and Installation

INFOID:0000000009949107

#### REMOVAL

**WARNING:**
**Never remove the radiator cap when the engine is hot. Serious burns could occur from high pressure coolant escaping from the radiator.**
**CAUTION:**
**Perform this step engine is cold.**

1. Remove air duct (inlet). Refer to EM-24, "Exploded View".
2. Remove hose clamps, and remove CVT water hose A.
3. Remove hose clamps, and remove CVT water hose B.
4. Remove hose clamps, and remove CVT water hose C.
5. Remove CVT water tube.

#### INSTALLATION

Note the following, and install in the reverse order of removal.

- Insert CVT water hose according to dimension “A” described below.

| CVT water hose (1) | Insert side tube (2) | Dimension “A” |
|---|---|---|
| CVT water hose A | Water inlet-outlet | End reaches the spool portion (B) |
| | CVT oil warmer | |
| CVT water hose B | CVT oil warmer | |
| | CVT water tube | |
| CVT water hose C | CVT water tube | |
| | Water pump | |

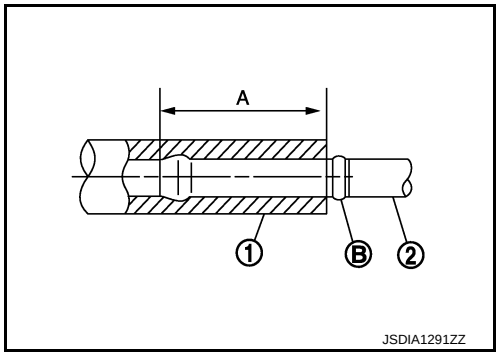


- Set hose clamps (1) at the both ends of fluid cooler hose (2) with dimension “A” from the hose edge.

**Dimension “A” : 5 – 7 mm (0.20 – 0.28 in)**

- Hose clamp should not interfere with the bulge.

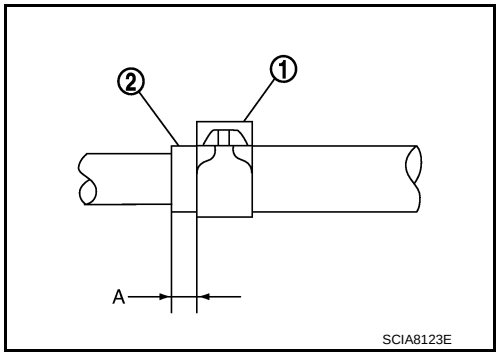


| CVT water hose | Hose end | Paint mark | Position of hose clamp* |
|---|---|---|---|
| CVT water hose A | Water inlet-outlet side | Facing forward | A |
| | CVT oil warmer side | Facing forward | A |
| CVT water hose B | CVT oil warmer side | Facing to the right of the vehicle | B |
| | CVT water tube side | Facing forward | A |
| CVT water hose C | CVT water tube side | Facing forward | A |
| | Water pump side | Facing upward | C |

*: Refer to the illustrations for the specific position of each hose clamp tab.

- The illustrations indicate the view from the hose ends.

⇦D : Vehicle front

⇦E : Vehicle upper

- When installing hose clamps the center line of each clamp tab should be positioned as shown in the figure.

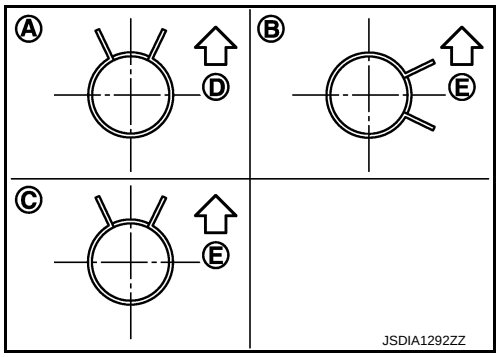


## WATER HOSE : Inspection

INFOID:0000000009949108

### INSPECTION AFTER INSTALLATION

Start and warm up the engine. Visually check that there is no leakage of engine coolant and CVT fluid.

# CVT FLUID COOLER HOSE

## CVT FLUID COOLER HOSE : Exploded View

INFOID:0000000009949109

### COMPONENT PARTS LOCATION

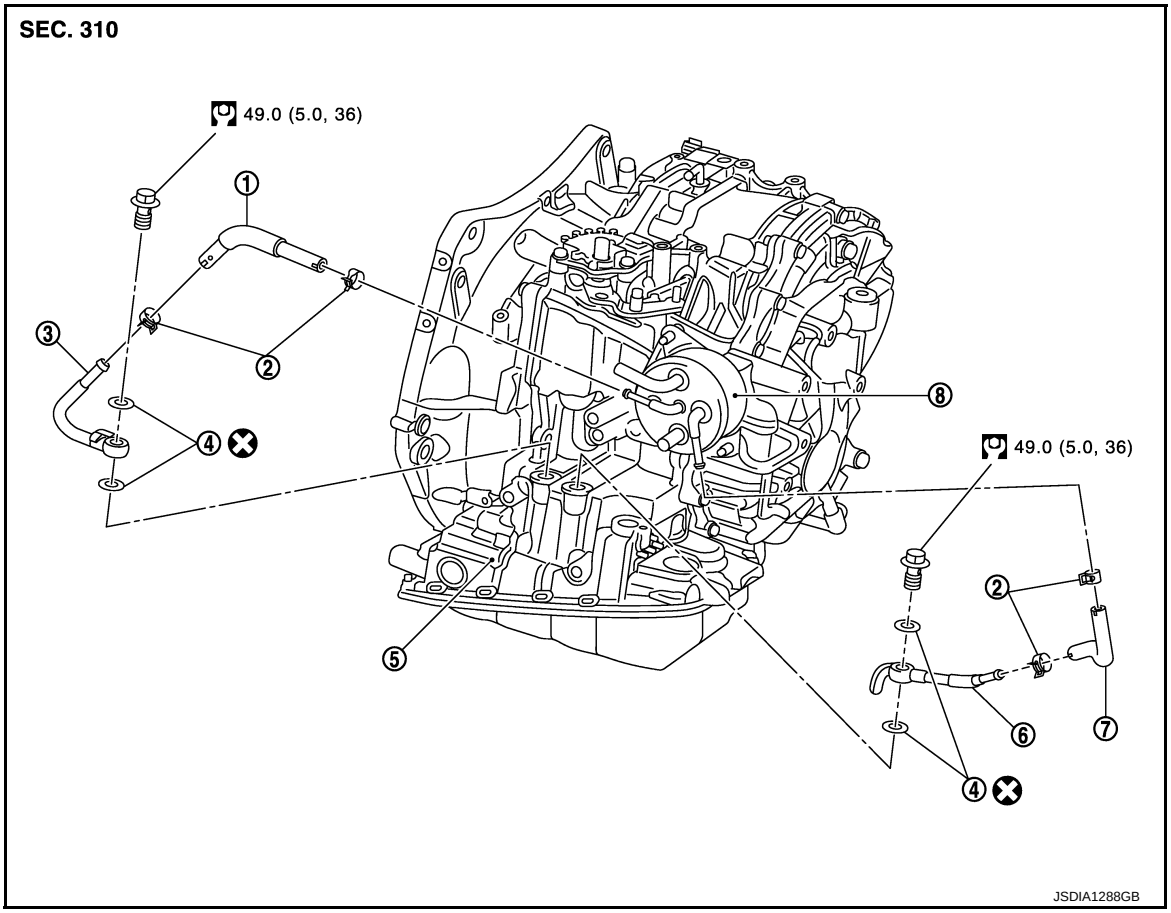


1. CVT fluid cooler hose A
2. Hose clamp
3. CVT fluid cooler tube A
4. Gasket
5. Transaxle assembly
6. CVT fluid cooler tube B
7. CVT fluid cooler hose B
8. CVT oil warmer

Refer to GI-4, "Components" for symbols in the figure.

## CVT FLUID COOLER HOSE : Removal and Installation

INFOID:0000000009949110

### REMOVAL

1. Remove air duct (inlet). Refer to EM-24, "Exploded View".
2. Remove hose clamps, and remove CVT fluid cooler hose A.
3. Remove hose clamps, and remove CVT fluid cooler hose B.
4. Remove CVT fluid cooler tube A and CVT fluid cooler tube B.

### INSTALLATION

Note the following, and install in the reverse order of removal.

- When installing CVT fluid cooler tube (1) and (2) to transaxle assembly, install them so that CVT fluid cooler tube rotation stopper (A) and (B) touch to transaxle case (C) and (D).

⇦ : Vehicle front

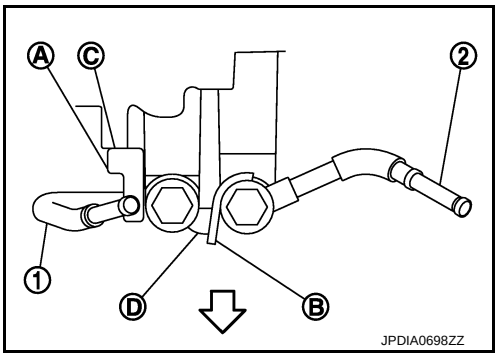

- Insert CVT fluid cooler hose according to dimension “A” described below.

| CVT fluid cooler hose (1) | Insert side tube (2) | Dimension “A” |
|---|---|---|
| CVT fluid cooler hose A | CVT fluid cooler tube | End reaches the 2-stage bulge (B) |
| | CVT oil warmer | |
| CVT fluid cooler hose B | CVT oil warmer | |
| | CVT fluid cooler tube | |

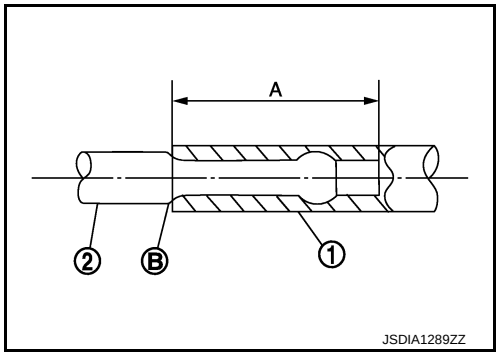


- Set hose clamps (1) at the both ends of fluid cooler hose (2) with dimension “A” from the hose edge.

**Dimension “A” : 5 – 7 mm (0.20 – 0.28 in)**

- Hose clamp should not interfere with the bulge.

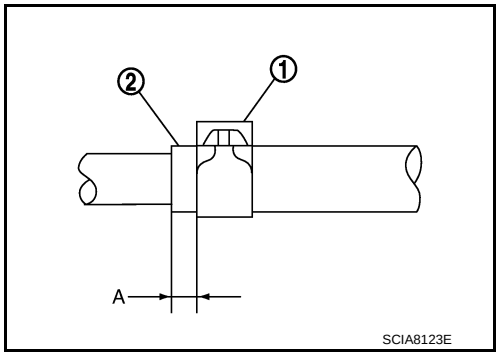


| CVT fluid cooler hose | Hose end | Paint mark | Position of hose clamp* |
|---|---|---|---|
| CVT fluid cooler hose A | CVT fluid cooler tube side | Vehicle front | A |
| | CVT oil warmer side | Vehicle front | A |
| CVT fluid cooler hose B | CVT oil warmer side | Vehicle front | A |
| | CVT fluid cooler tube side | Vehicle front | A |

*: Refer to the illustrations for the specific position of each hose clamp tab.

- The illustrations indicate the view from the hose ends.

⇦B : Vehicle front

- When installing hose clamps the center line of each clamp tab should be positioned as shown in the figure.

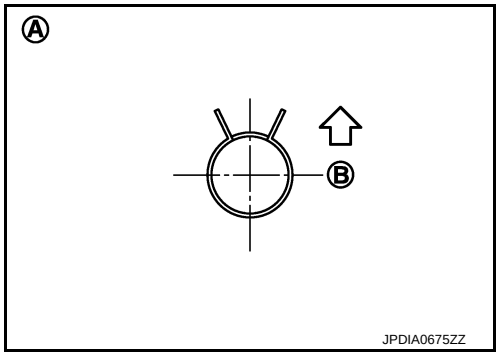


## CVT FLUID COOLER HOSE : Inspection

INFOID:0000000009949111

### INSPECTION AFTER INSTALLATION

Check for CVT fluid leakage and check CVT fluid level. Refer to TM-206, "Inspection".

## CVT OIL WARMER

## CVT OIL WARMER : Exploded View

INFOID:0000000009949112

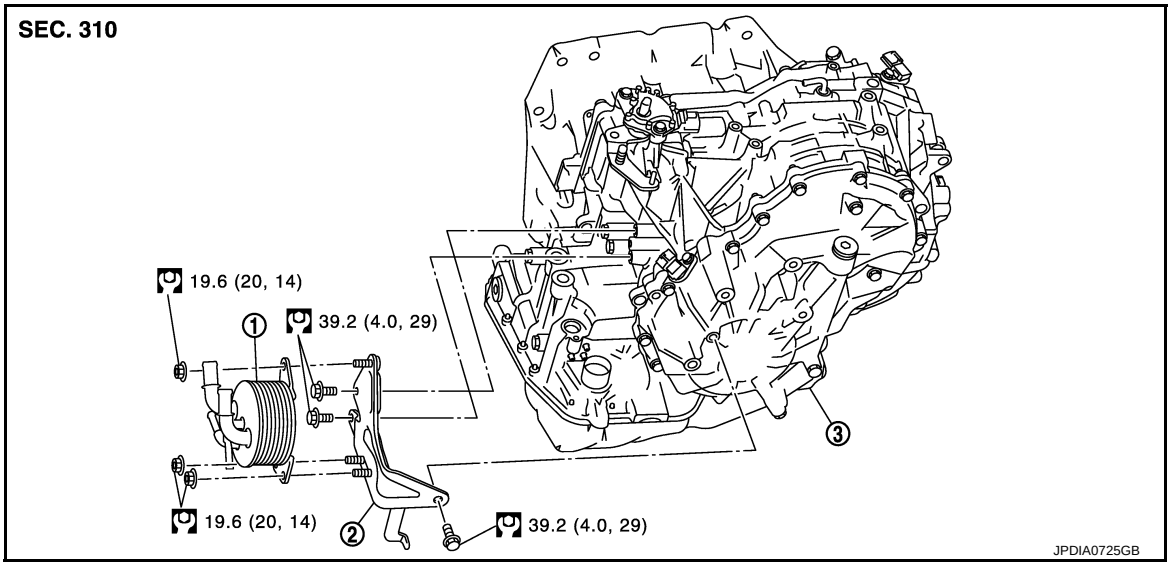


1. CVT oil warmer
2. Bracket
3. Transaxle assembly

Refer to GI-4, "Components" for symbols in the figure.

## CVT OIL WARMER : Removal and Installation

INFOID:0000000009949113

### REMOVAL

**WARNING:**

**Never remove the radiator cap when the engine is hot. Serious burns could occur from high pressure coolant escaping from the radiator.**

**CAUTION:**

**Perform this step engine is cold.**

1. Remove CVT water hose from CVT oil warmer. Refer to TM-230, "WATER HOSE : Exploded View".
2. Remove CVT fluid cooler hose from CVT oil warmer. Refer to TM-231, "CVT FLUID COOLER HOSE : Exploded View".
3. Remove CVT oil warmer.
4. Remove bracket.

### INSTALLATION

Install in the reverse order of removal.

## CVT OIL WARMER : Inspection

INFOID:0000000009949114

### INSPECTION AFTER INSTALLATION

- Check for CVT fluid leakage and check CVT fluid level. Refer to TM-206, "Inspection".
- Start and warm up the engine. Visually check that there is no leakage of engine coolant and CVT fluid.

# UNIT REMOVAL AND INSTALLATION

## TRANSAXLE ASSEMBLY

### Exploded View

INFOID:0000000009949115

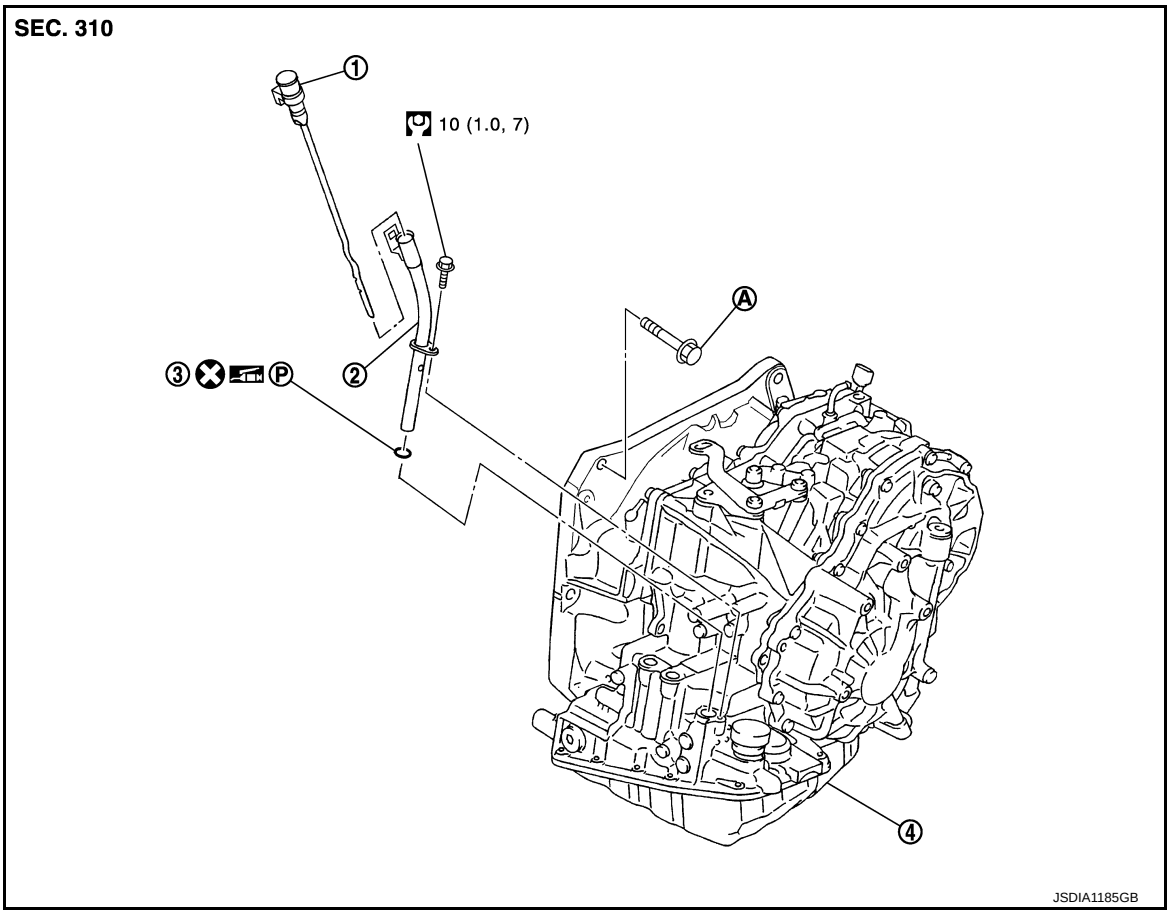


1. CVT fluid level gauge
2. CVT fluid charging pipe
3. O-ring
4. Transaxle assembly

A. : Tightening must be done following the installation procedure. Refer to TM-235, "Removal and Installation".

Refer to GI-4, "Components" for symbols in the figure.

### Removal and Installation

INFOID:0000000009949116

**WARNING:**

**Never remove the radiator cap when the engine is hot. Serious burns could occur from high pressure coolant escaping from the radiator.**

**CAUTION:**

- **Perform this step engine is cold.**
- **When replacing TCM and transaxle assembly as a set, replace transaxle assembly first and then replace TCM. Refer to TM-68, "Description".**

#### REMOVAL

1. Remove battery. Refer to PG-82, "Exploded View".
2. Remove air duct (inlet), air duct and air cleaner case. Refer to EM-24, "Exploded View".
3. Remove air breather hose.
4. Remove battery bracket.
5. Disconnect following harness connector and wire harness.
   - CVT unit connector. Refer to TM-202, "Removal and Installation Procedure for CVT Unit Connector".

- Transmission range switch connector
- Primary speed sensor connector
- Secondary speed sensor connector
- Ground

6. Remove control cable and bracket from transaxle assembly. Refer to TM-219, "Exploded View".
7. Remove CVT water hoses. Refer to TM-230, "WATER HOSE : Exploded View".
8. Remove CVT water tubes. Refer to TM-230, "WATER HOSE : Exploded View".
9. Remove CVT fluid level gauge.
10. Remove CVT fluid charging pipe.
11. Remove O-ring from CVT fluid charging pipe.
12. Remove starter motor. Refer to STR-25, "Exploded View".
13. Remove engine under cover.
14. Turn crankshaft, and remove the four tightening nuts for drive plate and torque converter.
    **CAUTION:**
    **When turning crankshaft, turn it clockwise as viewed from the front of the engine.**
15. Remove front drive shafts. Refer to FAX-15, "Exploded View".
16. Remove heat insulator. Refer to EM-29, "Exploded View".
17. Support transaxle assembly with a transmission jack.
    **CAUTION:**
    **When setting the transmission jack, be careful not to collide against drain plug.**
18. Remove engine mounting insulator (LH). Refer to EM-74, "Exploded View".
19. Remove engine mounting bracket support (LH). Refer to EM-74, "Exploded View".
20. Remove rear engine mounting bracket. Refer to EM-74, "Exploded View".
21. Remove rear torque rod. Refer to EM-74, "Exploded View".
22. Support engine assembly with a transmission jack.
    **CAUTION:**
    **When setting the transmission jack, be careful not to collide against drain plug.**
23. Remove engine mounting bracket (LH). Refer to EM-74, "Exploded View".
24. Remove bolts fixing transaxle assembly to engine assembly.
25. Remove transaxle assembly from vehicle.
    **CAUTION:**
    - **Secure torque converter to prevent it from dropping.**
    - **Secure transaxle assembly to a transmission jack.**
26. Remove CVT fluid cooler tubes. Refer to TM-231, "CVT FLUID COOLER HOSE : Exploded View".

## INSTALLATION

Note the following, and install in the reverse order of removal.

**CAUTION:**

- **Never reuse O-ring.**
- **Apply grease to O-ring.**
- Check fitting of dowel pins (A) when installing transaxle assembly to engine assembly.

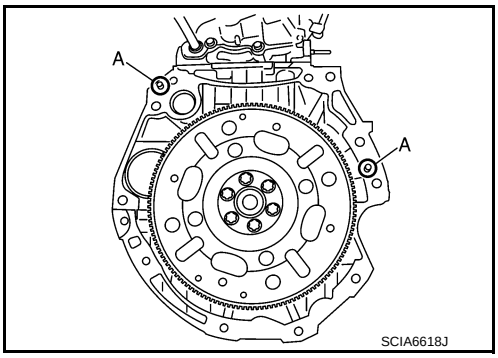

- Rotate torque converter so that the stud bolt (A) for mounting the drive plate location guide of torque converter aligns with the mounting position of starter motor.

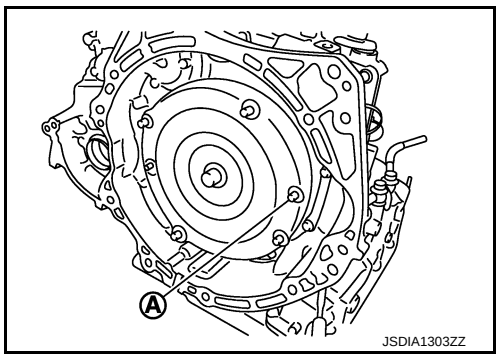


- Rotate crankshaft so that the hole (A) for inserting drive plate location guide of drive plate aligns with the mounting position (B) of starter motor.

**CAUTION:**
- **When turning crankshaft, turn it clockwise as viewed from the front of the engine.**
- **Be careful that torque converter stud bolt is aligned to drive plate hole position. Otherwise stud bolt contacts drive plate.**

**NOTE:**
Insert stud bolt of torque converter into the hole of drive plate, aligning the drive plate hole position and torque converter.

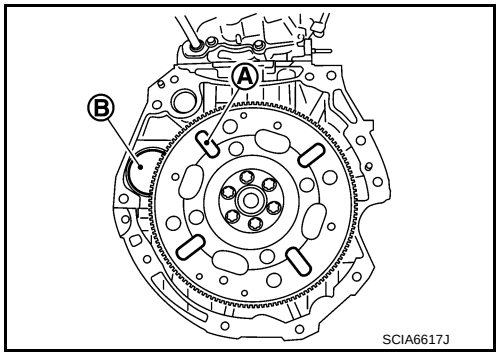


- Temporally tighten drive plate and torque converter connecting nuts and tighten to the specified torque.

**: 51 N·m (5.2 kg-m, 38 ft-lb)**

**CAUTION:**
- **When turning crankshaft, turn it clockwise as viewed from the front of the engine.**
- **When tightening the nuts for the torque converter after fixing the crankshaft pulley bolts, confirm the tightening torque of the crankshaft pulley mounting bolts. Refer to EM-43, "Removal and Installation".**

- When installing transaxle assembly to the engine assembly, attach the fixing bolts in accordance with the following.

| Bolt position | A | B |
|---|---|---|
| Insertion direction | Transaxle assembly to engine assembly | Engine assembly to transaxle assembly |
| Number of bolts | 2 | 2 |
| Bolt length mm (in) | 55 (2.17) | 50 (1.97) |
| Tightening torque N·m (kg-m, ft-lb) | 62.0 (6.3, 45.7) | |

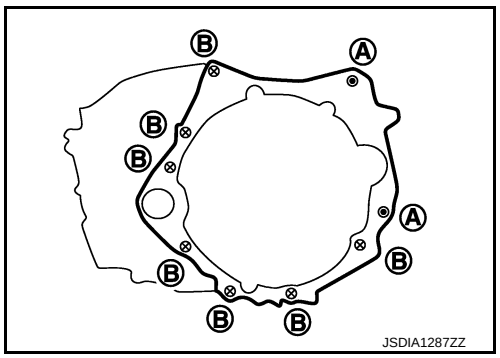


## Inspection and Adjustment

INFOID:0000000009949117

### INSPECTION BEFORE INSTALLATION

After inserting a torque converter to transaxle assembly, check dimension “A” within the reference value limit.

B : Scale
C : Straightedge

**Dimension “A” : TM-240, "Torque Converter"**

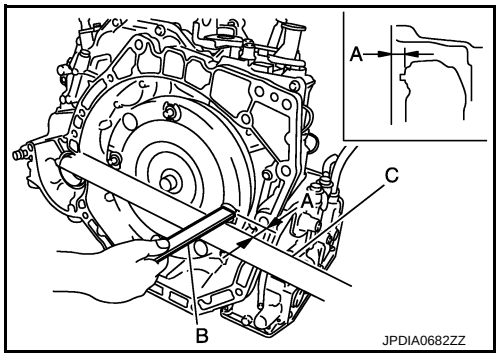

## INSPECTION AFTER INSTALLATION

Check the following.

- Check for CVT fluid leakage and check CVT fluid level. Refer to TM-206, "Inspection".
- Check CVT position. Refer to TM-215, "Inspection and Adjustment".
- Start and warm up the engine. Visually check that there is no leakage of engine coolant and CVT fluid.

## ADJUSTMENT AFTER INSTALLATION

Perform “ADDITIONAL SERVICE WHEN REPLACE TRANSAXLE ASSEMBLY”. Refer to TM-68, "Description".

# UNIT DISASSEMBLY AND ASSEMBLY

## TORQUE CONVERTER

### Disassembly

INFOID:0000000009949118

1. Remove transaxle assembly. Refer to TM-235, "Exploded View".
2. Remove torque converter from transaxle assembly.
   **CAUTION:**
   **Never damage bushing inside of torque converter sleeve when removing torque converter.**

### Assembly

INFOID:0000000009949119

Note the following, and install in the reverse order of removal.
Attach the pawl (A) of the torque converter to the inner gear hole (B) on the oil pump side.

**CAUTION:**
- **Rotate the torque converter for installing torque converter.**
- **Never damage the bushing inside the torque converter sleeve when installing the converter housing oil seal.**

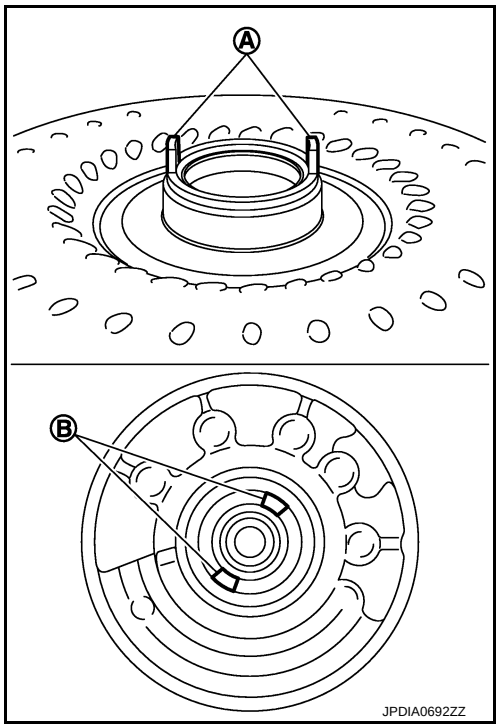


### Inspection

INFOID:0000000009949120

#### INSPECTION AFTER INSTALLATION

After inserting a torque converter to transaxle assembly, check dimension “A” within the reference value limit.

| | |
|---|---|
| B | : Scale |
| C | : Straightedge |

**Dimension “A”** : **TM-240, "Torque Converter"**

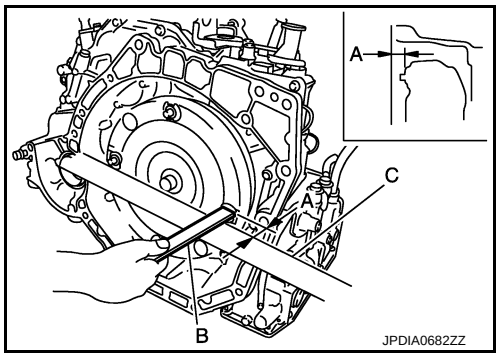

# SERVICE DATA AND SPECIFICATIONS (SDS)

## SERVICE DATA AND SPECIFICATIONS (SDS)

### General Specification

INFOID:0000000009949121

| | | |
|---|---|---|
| Applied model | Engine | MR18DE |
| | Axle | 2WD |
| Transaxle model | | RE0F08B |
| Transmission gear ratio | D range | 2.561 – 0.427 |
| | Reverse | 2.689 |
| | Final drive | 5.473 |
| Recommended fluid and fluid capacity | | Refer to MA-10, "Fluids and Lubricants". |

### Vehicle Speed When Shifting Gears

INFOID:0000000009949122

Unit: rpm

| Throttle position | Shift pattern | Engine speed | |
|---|---|---|---|
| | | At 40 km/h (25 MPH) | At 60 km/h (37 MPH) |
| 2/8 | “D” position | 1,300 – 3,100 | 1,400 – 3,500 |
| | Overdrive OFF condition | 2,200 – 3,000 | 2,800 – 3,600 |
| | “L” position | 3,100 – 4,000 | 3,800 – 4,700 |
| 8/8 | “D” position | 3,600 – 4,500 | 4,400 – 5,300 |
| | Overdrive OFF condition | 3,600 – 4,500 | 4,400 – 5,300 |
| | “L” position | 3,600 – 4,500 | 4,400 – 5,300 |

**CAUTION:**

**Lock-up clutch is engaged when vehicle speed is approximately 18 km/h (11 MPH) to 90 km/h (56 MPH).**

### Stall Speed

INFOID:0000000009949123

Unit: rpm

| | |
|---|---|
| Stall speed | 2,600 – 3,150 |

### Line Pressure

INFOID:0000000009949124

Unit: kPa (kg/cm$^2$, psi)

| Select position | Engine speed | Line pressure |
|---|---|---|
| “R”, “D” | Idle speed | 650 (6.63, 94.3) |
| | Stall speed | 4,250 (43.35, 616.3) |

### Torque Converter

INFOID:0000000009949125

| | |
|---|---|
| Dimension “A” between end of converter housing and torque converter | 14.4 mm (0.57 in) |