Table of Contents

E70 Voltage Supply and Bus Systems

Subject Page

E70 Voltage Supply 5
System Circuit Diagram 6
Legend for System Circuit Diagram 7
Overview of System Components 8
Vehicle Battery 8
Distribution Box (on battery) 8
Rear Distribution Box 10
Soldered Relays (in rear distribution box) 11
Battery Cables 12
Front Distribution Box 13
Installation Position 13
Front Distribution Box and Junction Box Control Unit 14
Internal Plug Connection 15
Printed Circuit Board (PCB) 16
Soldered Relays 17
Direct Contacting 18

E70 Bus Systems 20
Structure in Vehicle 20
E70 Bus System Overview 21
E70 Overall Network 24
Overview of Bus Systems 24
Main Bus Systems 25
Changes to Main Bus Systems 25
Diagnosis CAN 26
Location of D-CAN Connector 27
Body CAN 28
MOST Bus System 30
Features 30
Control Channel 31
Synchronous Channel 31
Asynchronous Channel 31
Control Unit Logon 31
MOST Users 32
Light Direction 32
MOST Access 33

cardiagn.com

Subject Page

Fiber Optics Connector 34
Identification of Fiber Optics Conductors 34
FlexRay 36
What are the advantages of FlexRay? 37
FlexRay - a standard in the automotive industry 37
FlexRay - Use in the E70 38
System Overview 40
Properties of FlexRay 42
Bus Topology 42
Line-based Bus Topology 42
Point-to-point Bus Topology 42
Mixed Bus Topology 43
Redundant Data Transmission 43
Bus Topology of FlexRay in the E70 43
Transmission Medium - Signal Properties 45
Deterministic Data Transmission 46
Bus Protocol 47
High Bandwidth 47
Synchronization 47
FlexRay in the E70 48
Wake-up and Sleep Characteristics 48
Wiring 49
Plug Connections 50
Sub-bus Systems 51
K-bus Protocol 51
LIN-bus 51
BSD 51
Terminating Resistors 52

cardiagn.com

BLANK
PAGE

cardiagn.com

Voltage Supply and Bus Systems

Model: E70

Production: From Start of Production

OBJECTIVES

After completion of this module you will be able to:

- Describe E70 Bus Systems
- Understand D-CAN
- Understand FlexRay
- Locate E70 voltage distribution components

cardiagn.com

E70 Voltage Supply

In view of the ever increasing electrical functions in the areas of vehicle comfort, communication and safety, growing significance is attached to the power supply system.

In the E70, there are two separate distribution boxes. The front distribution box is near the glove box and the rear distribution box is on the right-hand side of the luggage compartment.

The following graphic shows the arrangement of the most important components of the power supply system in the E70.

Index	Explanation
1	Rear distribution box, right-hand side of luggage compartment
2	Front distribution box behind glove compartment

cardiagn.com

System Circuit Diagram

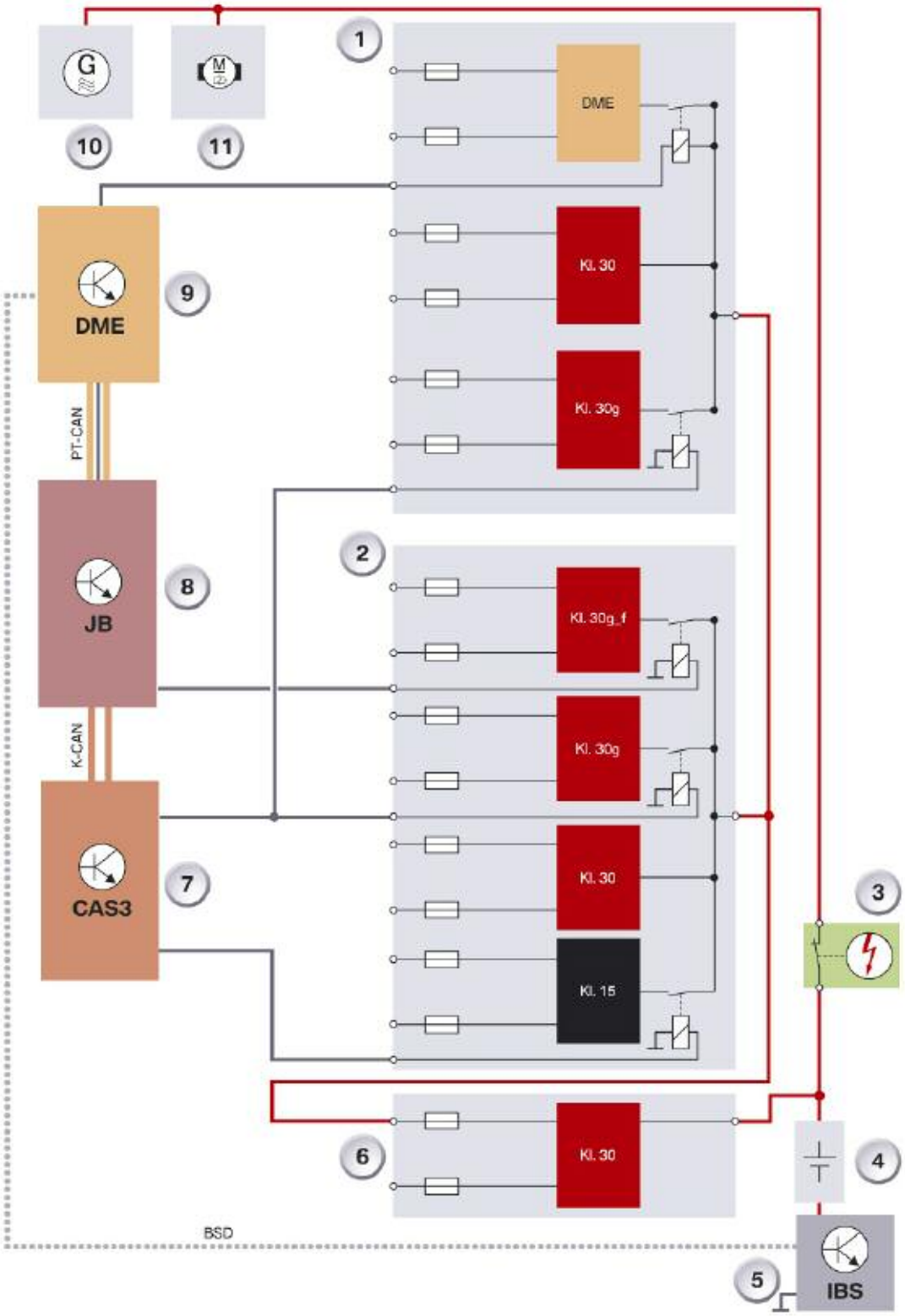

cardiagn.com

Legend for System Circuit Diagram

Index	Explanation
1	Front distribution box, behind glove compartment
2	Rear distribution box, right hand side of luggage compartment
3	Safety battery terminal
4	Vehicle battery
5	Intelligent battery sensor (IBS)
6	Distribution box, on battery
7	Car Access System 3 (CAS 3)
8	Junction box control unit (JBE)
9	Digital Motor Electronic (DME)
10	Alternator
11	Starter
KL30	Continuous B+ (battery power)
KL30g_f	Switched positive (fault dependent)
KL30g	Switched positive, time dependent
KL15	Ignition ON
DME	DME main relay
BSD	Bit-serial data interface
K-CAN	Body CAN
PT-CAN	Powertrain CAN

cardiagn.com

Overview of System Components

The power supply system of the E70 consists of the following components:

- Vehicle battery
- Distribution box on the battery
- Rear distribution box on the right-hand side of the luggage compartment
- Battery cables
- Front distribution box behind the glove compartment
- Junction box control unit
- E-box engine compartment
- Jump start connection point
- Alternator.

The most important new features/changes to the power supply system in the E70 are described below

Vehicle Battery

The vehicle battery is installed on the rear right in the luggage compartment floor.
The vehicle batteries are 70 Ah and 90 Ah batteries. Depending on the equipment, these batteries are AGM (Absorbent Glass Mat) batteries. The main advantage of the AGM battery is its higher cycle strength.

Distribution Box (on battery)

The distribution box in the luggage compartment of the E70 is mounted directly on the vehicle battery. The rear distribution box on the battery is secured on the vehicle battery by means of a metal tab. The metal tabs must be pressed downward and outward in order to release the distribution box.

The distribution box on the battery is equipped with fuses for the following electric loads:

- Electrical auxiliary heater (100 A)
- Valvetronic or common rail system (80 A)
- Intelligent battery sensor IBS
- Reserve
- Front distribution box (250 A)
- Rear distribution box (100 A)
- Large electric fan 850 W (100 A)
- Reserve.

cardiagn.com

The distribution box on the battery should be replaced only as a complete unit.
The fuses are integrated as a complete unit in the housing of the distribution box on the battery. The fuses differ in terms of their power rating. The distribution box additionally contains the power supply for the IBS.

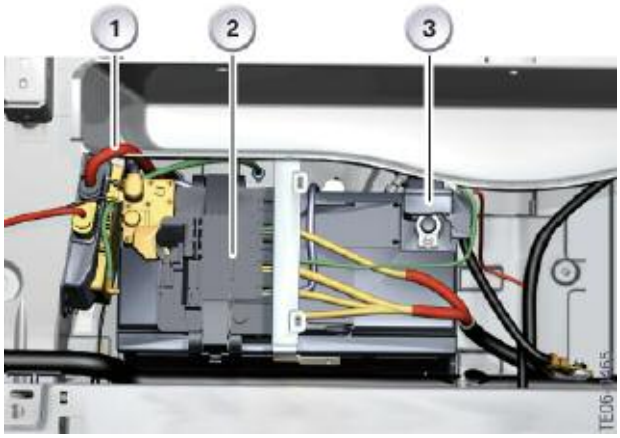

Index	Explanation
1	Battery cable to engine
2	Distribution box on battery
3	Intelligent Battery Sensor (IBS)

Note: The connectors are color-coded and mechanically coded to avoid confusion. These are high power connections, therefore always ensure correct contacting!

When replacing or working on the distribution box, always make sure the plug connections and, above all, that the screw connections are secured properly. Connection between battery terminal and distribution box - 15 Nm.

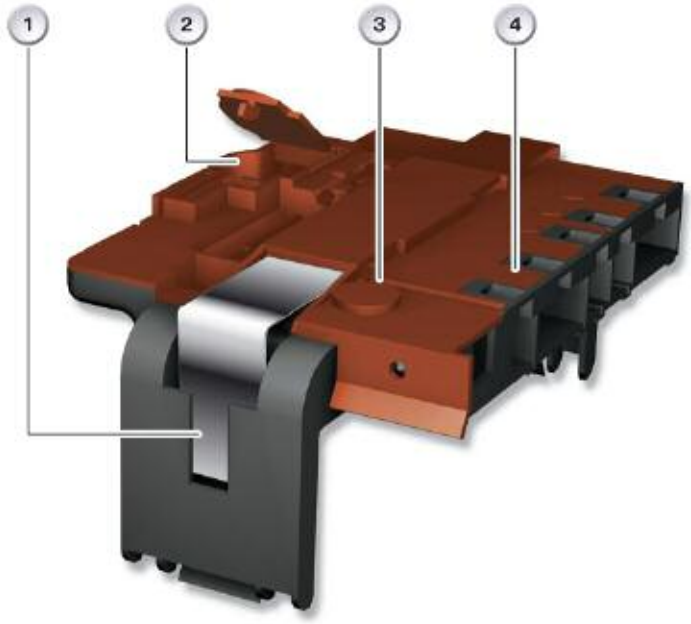

Index	Explanation
1	Retaining clip
2	Connection to battery terminal
3	Rear distribution box connector
4	High current consumer connections

cardiagn.com

Rear Distribution Box

Due to the high number of consumers and control units in the E70, another fuse carrier has been mounted in the luggage compartment.

In addition to the fuse carrier, relays are also plugged in or soldered onto the board. The following relays are accommodated in the fuse carrier:

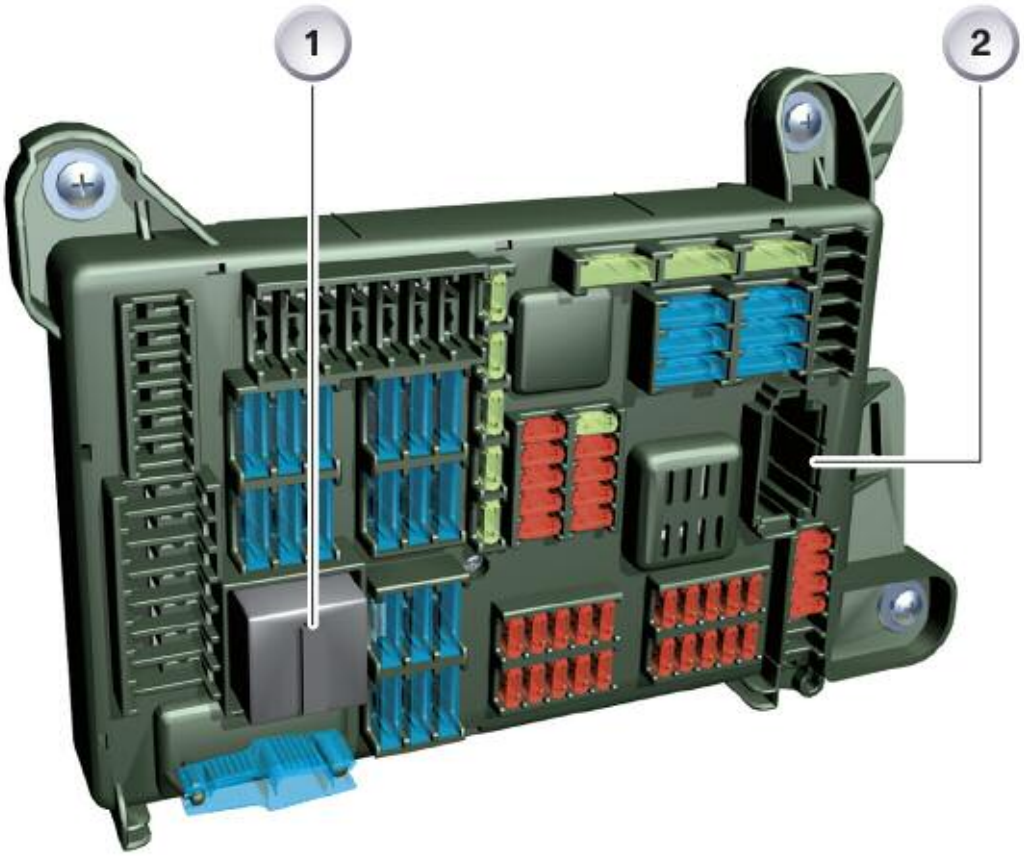

Index	Explanation	Index	Explanation
1	Terminal 30g relay	2	Plug connector

cardiagn.com

Soldered Relays (in rear distribution box)

Different relays are soldered onto the PCB in the rear distribution box. In the event of an error, the entire distribution box must be replaced.

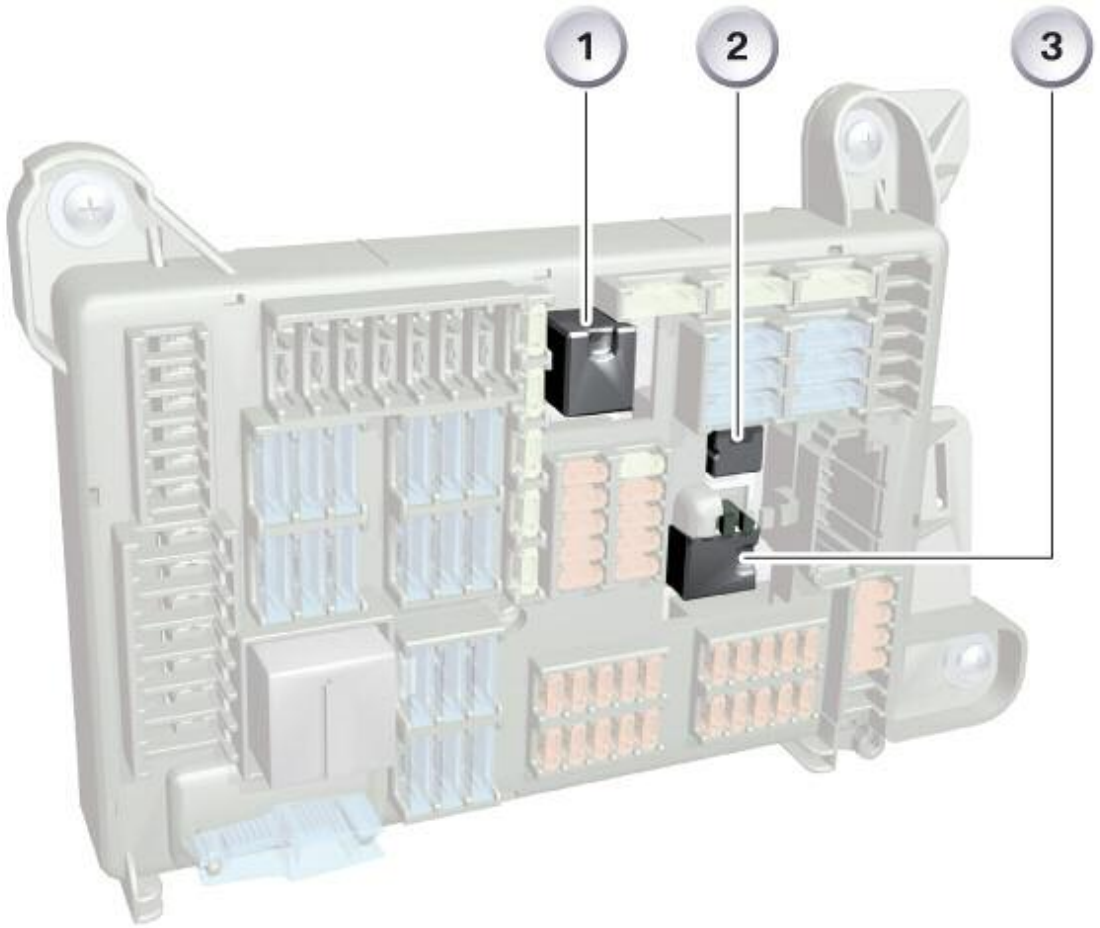

Index	Explanation	Index	Explanation
1	Terminal 30 g_f relay	3	Terminal 15 relay
2	SCA relay		

cardiagn.com

Battery Cables

On the E70, two main power leads run along the underbody from the battery box to the engine compartment. One of the main power leads is routed via the jump start terminal to the starter and to the alternator.

The other cable supplies the engine electronics with power. Depending on the model of vehicle, different line cross sections are used.

Cable	Cross section	Material
Cable to starter and alternator on N62 engine	110 mm^2	Aluminum
Cable to starter and alternator on N52 engine	90 mm^2	Aluminum
Cable to front distribution box behind glove box	35 mm^2	Copper
Cable to the motor electronics	10 mm^2	Copper
Cable to electric fan 850 W	12 mm^2	Copper

One battery cable is installed in the vehicle interior. It runs to the front distribution box.

The transfer points (magnified view) for the two main power cables is located in the battery box. To avoid damage, the main power cables are installed in a protected area on the underbody.

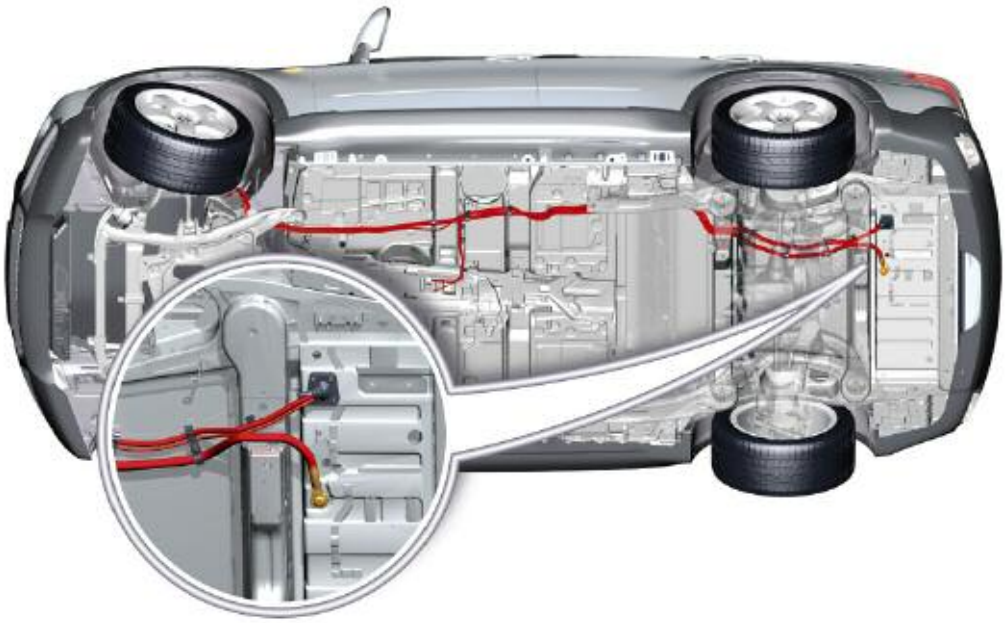

cardiagn.com

Front Distribution Box

This section describes the front distribution box. The junction box control unit is described in the section "Junction box control unit".

There are three versions of front distribution box for the E70. In the lower part of the front distribution box, there is an opening through which it is connected to the junction box control unit.

Installation Position

The distribution box is installed under the instrument panel on the right-hand side.
To change a fuse, the distribution box must be lowered.

cardiagn.com

Front Distribution Box and Junction Box Control Unit

The connection between the front distribution box and the junction box control unit is realized via the opening in the bottom of the distribution box. An internal plug connection provides the electrical connection between the two components.

When assembled, the two components from one unit consisting of the junction box control unit and the front distribution box.

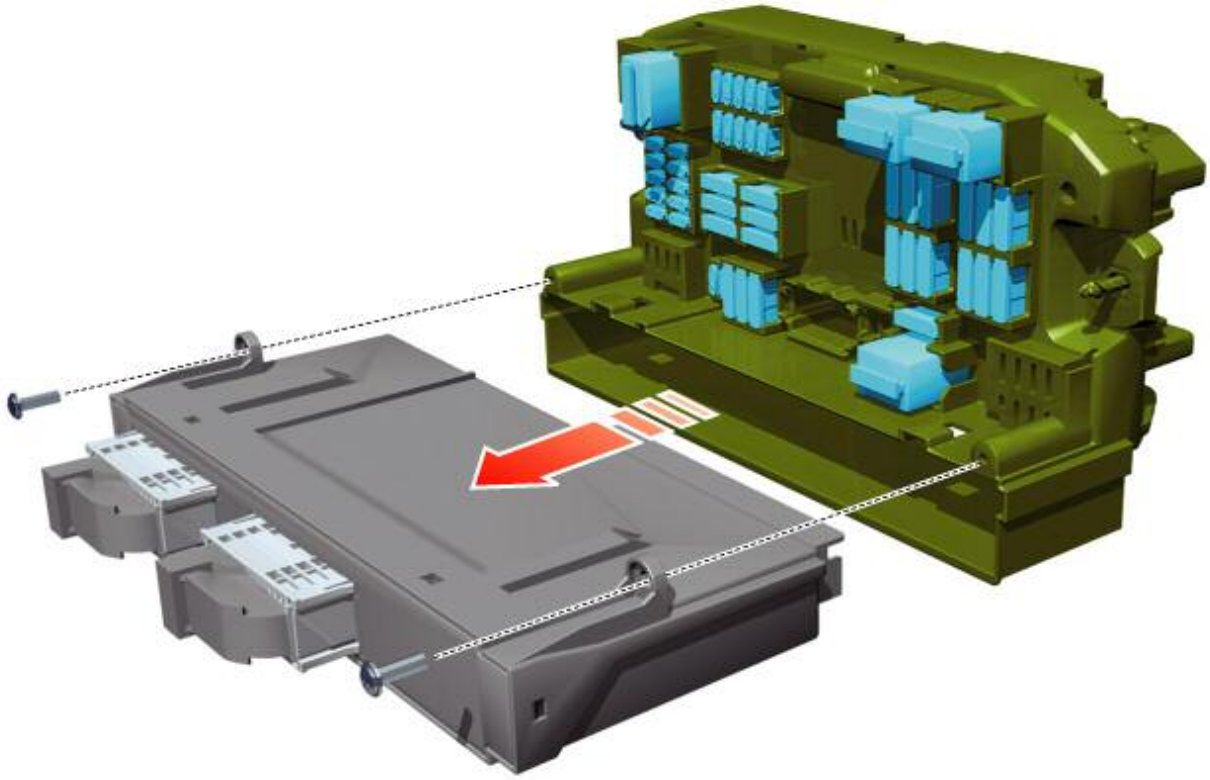

Note: The distribution box and junction box control unit components are to be replaced individually. In addition to the corresponding test modules in the diagnostics, diagnosis cables are also available with which electrical measurements can be made directly on the control-unit plugs and on the internal interface.

cardiagn.com

Internal Plug Connection

The internal plug connection is on the left inside the opening for the junction box control unit.

The internal plug connection is responsible for actuating the relay in the front distribution box. In addition, the correct operation of this relay is monitored by the junction box control unit.

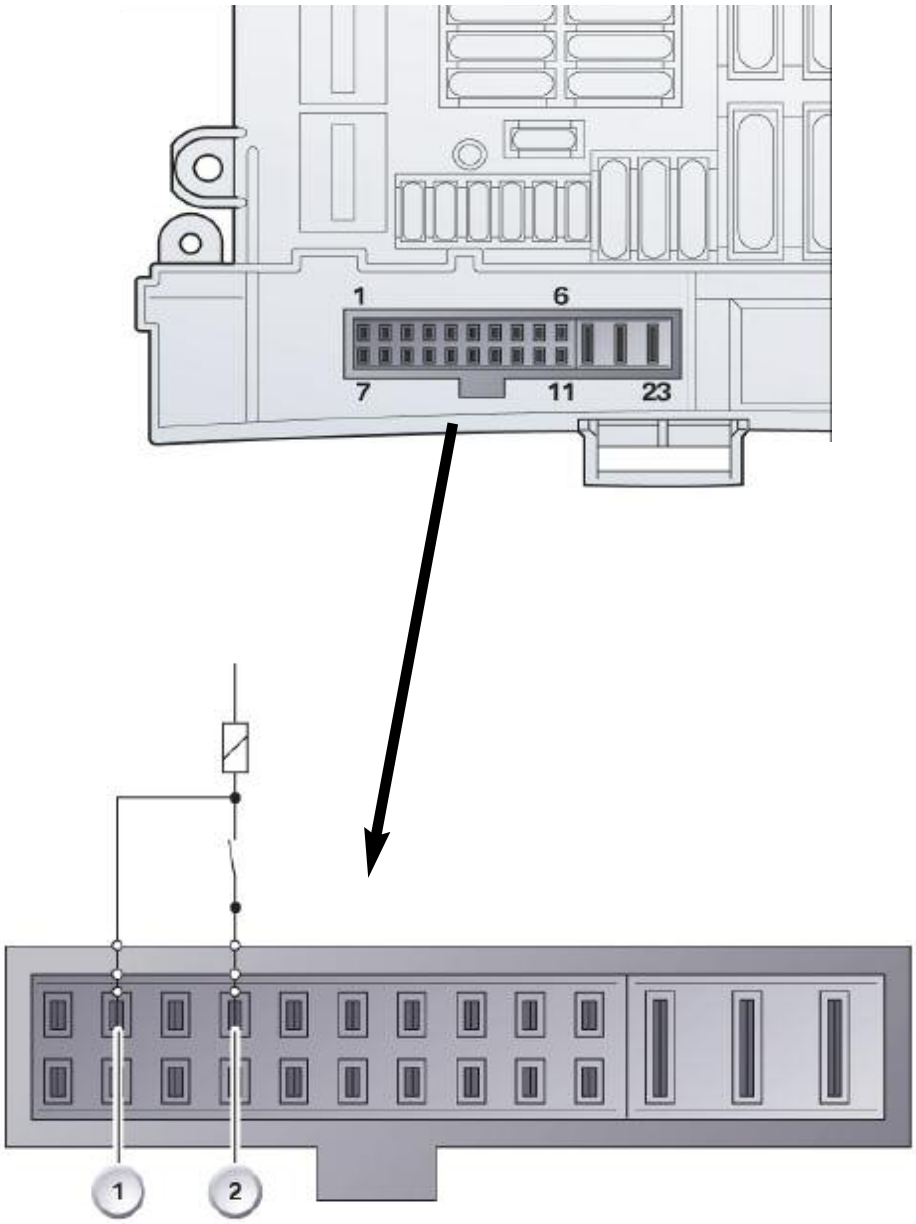

Index	Explanation	Index	Explanation
1	Monitoring connection	2	Actuation connection

cardiagn.com

Printed Circuit Board (PCB)

Different relays are used in the distribution box corresponding to the equipment and engine variants.

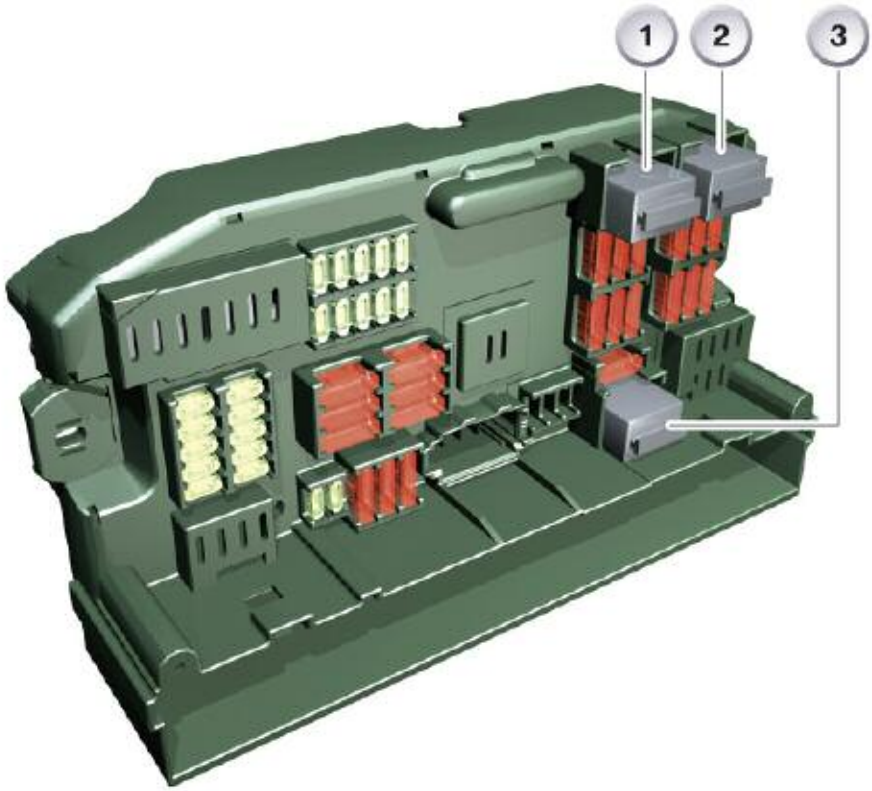

Index	Explanation	Index	Explanation
1	EHC relay	3	Relay for wiper stage 1
2	Rear wiper relay		

cardiagn.com

Soldered Relays

Different relays are soldered onto the PCB in the front distribution box. In the event of a fault, the entire distribution box must be replaced.

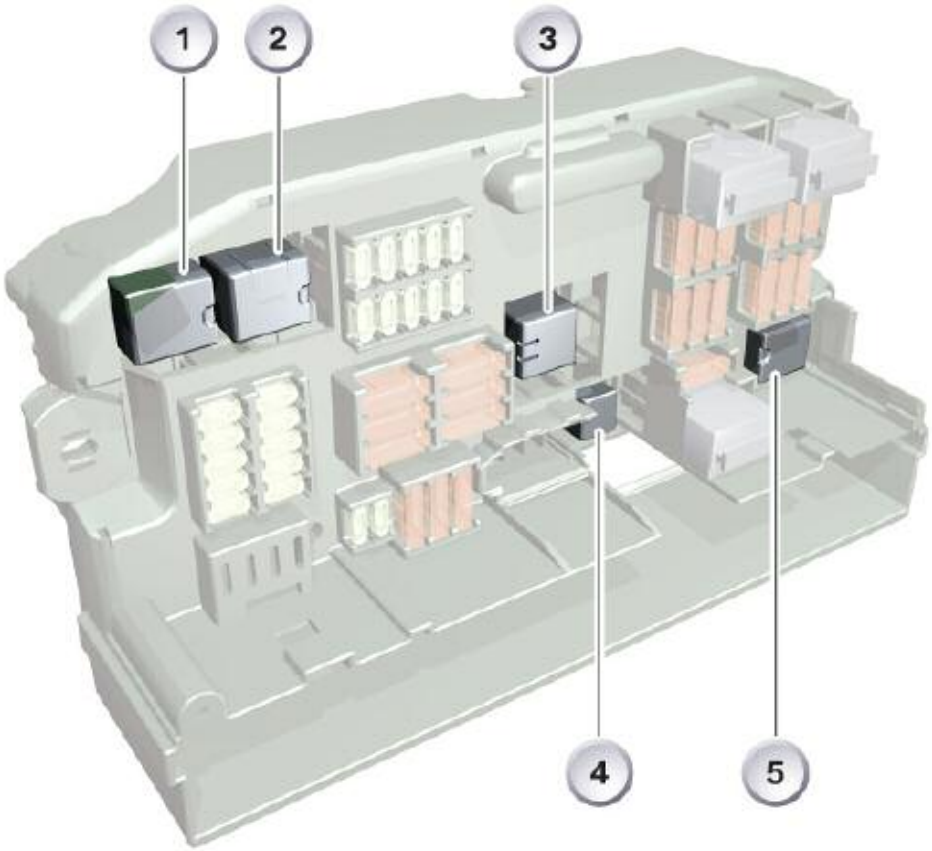

Index	Explanation	Index	Explanation
1	Terminal 30g relay	4	Relay for wiper stage 2
2	Heated rear window relay	5	Terminal 87 relay
3	Horn and headlight cleaning system double relay		

cardiagn.com

Direct Contacting

On the distribution boxes, direct contacting to the fuses is carried out. The fuses are plugged into the PCB with a connection in the plug connector. The other plug connector is connected directly with the connectors on the wiring harness.

The advantages of this design modification are:

- Improved package space utilization
- Improved heat dissipation

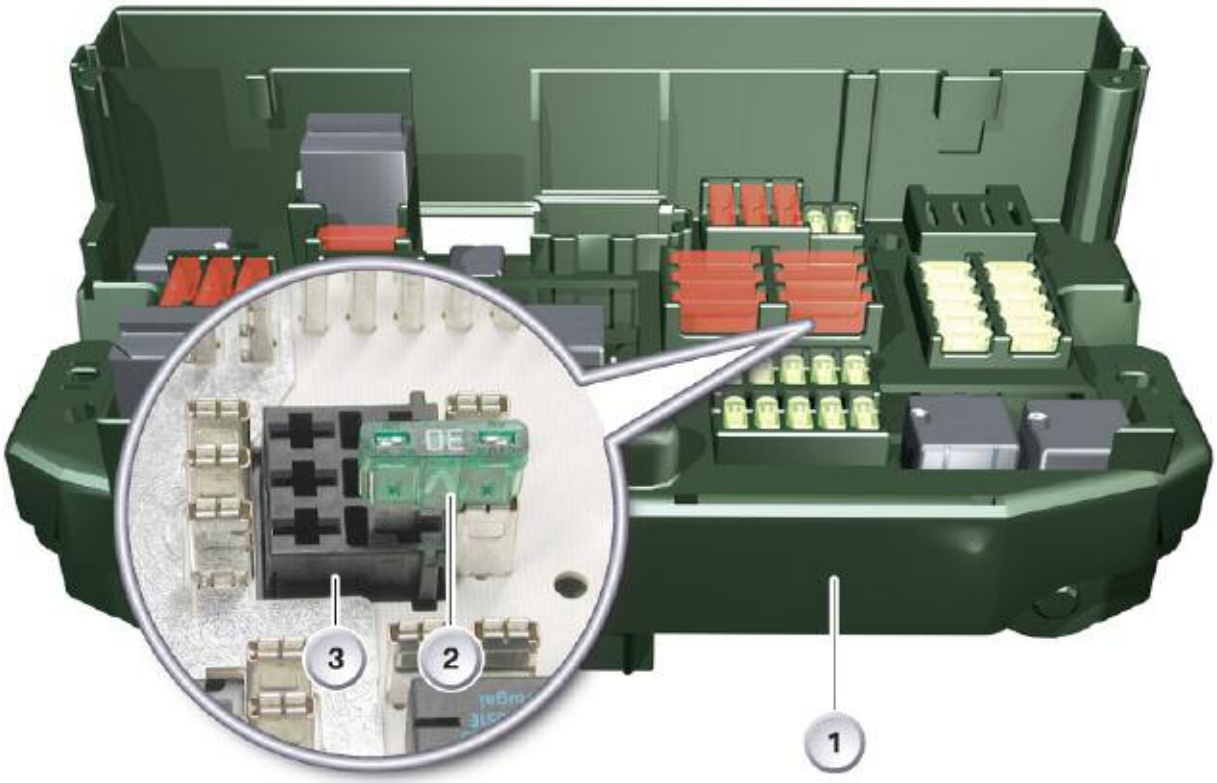

Index	Explanation	Index	Explanation
1	Front distribution box housing	3	Wiring harness connector
2	Fuse		

Note: Particular care must be taken to ensure that the fuses are fitted firmly when unplugging and re-connecting the connectors for the wiring harness. The fuses must be braced when plugging in the wiring harness.

cardiagn.com

NOTES PAGE

cardiagn.com

E70 Bus Systems

This reference information deals with the bus systems of the E70. The following innovations have been implemented in the bus systems in the new BMW X5 (E70):

- New data transmission speed on the diagnostic CAN D-CAN (500 Kbps)
- FlexRay - new bus system in the area of the chassis and suspension systems

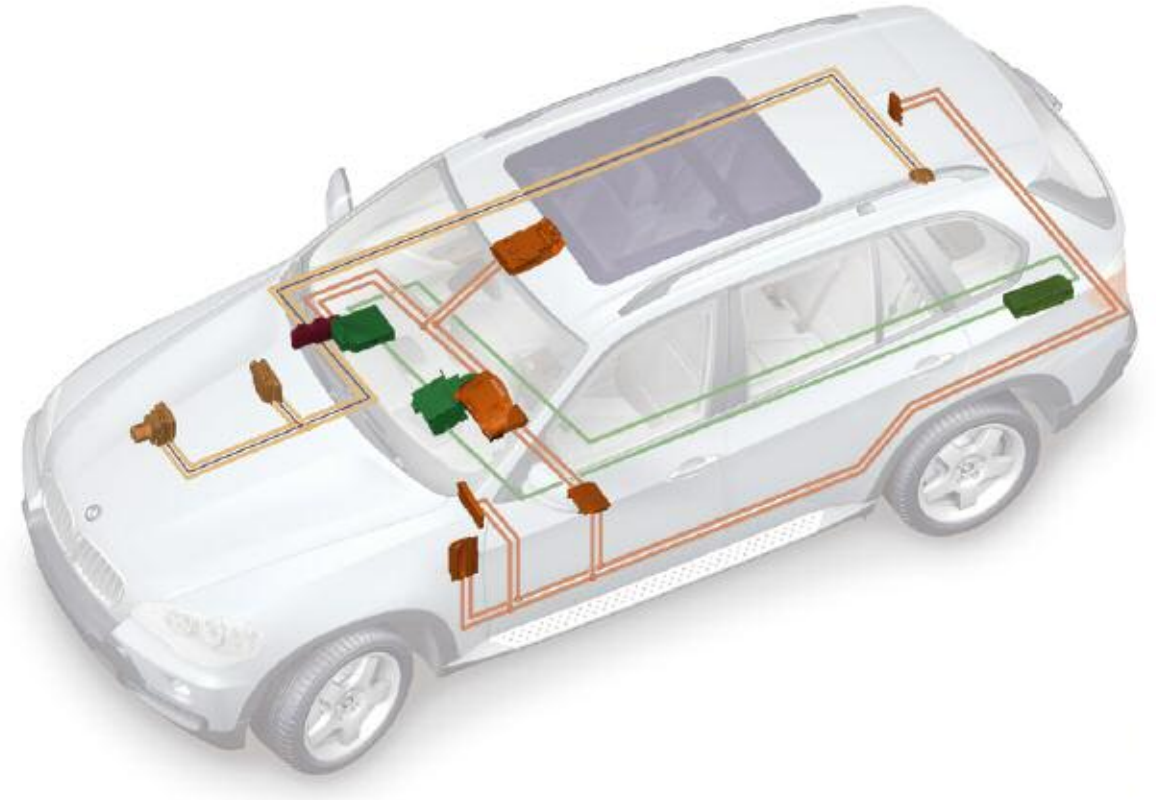

Structure in Vehicle

The basic structure of the overall network in the E70 builds on the technological basis of the current E90. The drive train control units are linked through the powertrain-CAN (PT-CAN). In addition, the chassis-CAN (F-CAN) is used for the chassis and suspension systems. The control units of the general vehicle electrical system are connected via the K-CAN.

The MOST is the information carrier for the majority of control units in the area of information and communication technologies.

A new addition is the FlexRay. This bus system is used for the first time in the area of the chassis and suspension control systems. It is described in more detail in this reference information.

cardiagn.com

E70 Bus System Overview

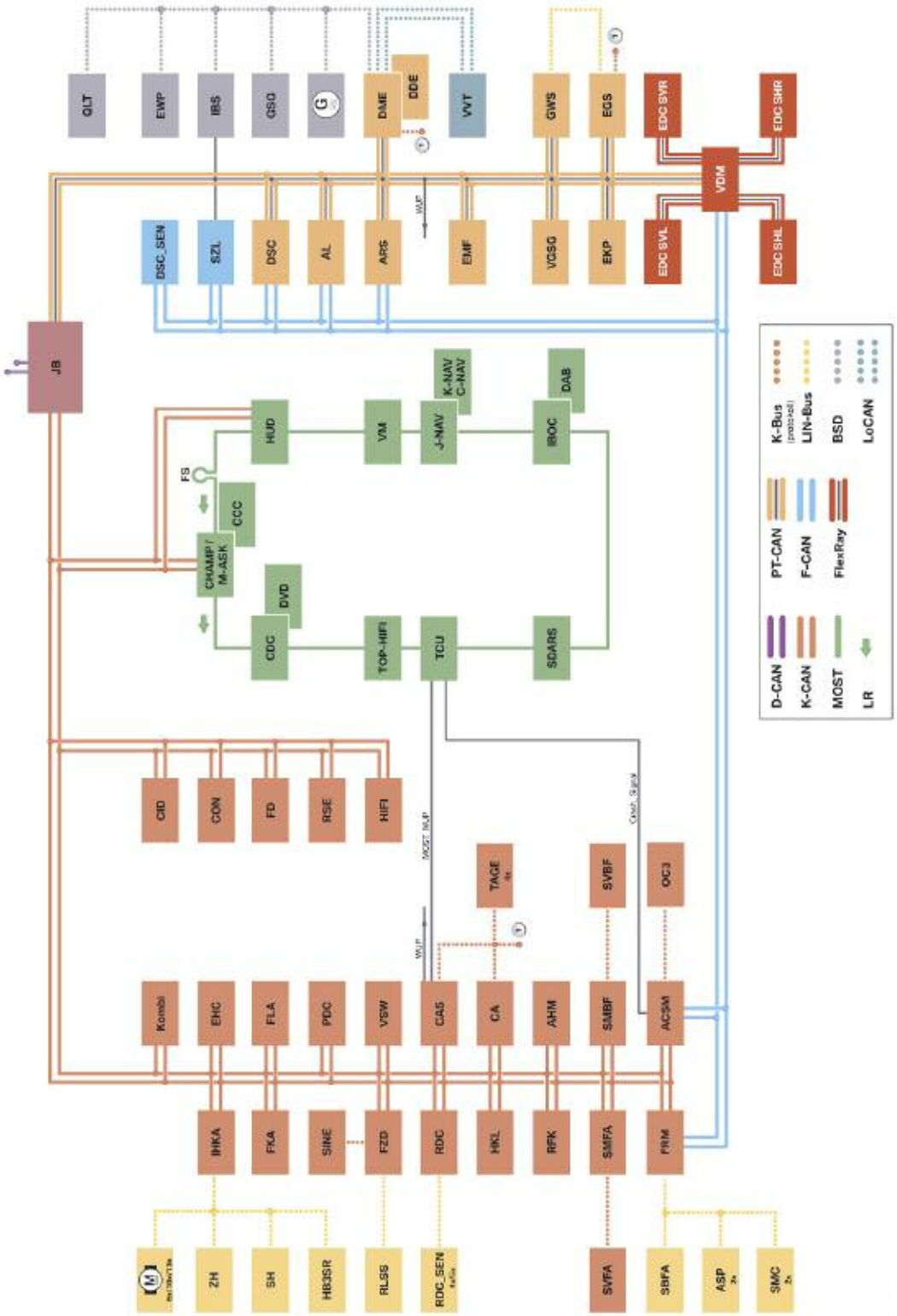

cardiagn.com

Legend for E70 Bus System Overview

Index	Explanation	Index	Explanation
ACSM	Advanced Crash Safety Management	EKP	Electric Fuel Pump (control unit)
AL	Active Steering	EMF	Electro-mechanical parking brake
ARS	Active Roll Stabilization	EWP	Electric Water Pump
ASP	Outside mirror	FD	Rear Compartment Display
CA	Comfort Access	FKA	Rear Compartment Heating and A/C
CAS	Car Access System	FLA	High Beam Assistant
CCC	Car Communication Computer	FRM	Footwell Module
CDC	CD Changer	FZD	Roof Function Center
M-ASK	Multi-Audio System Controller	GWS	Gear Selector Lever
CHAMP	Central Head unit and Multimedia Platform	HB3SR	Heating/Ventilation 3rd Row
CID	Central Information Display	HiFi	HiFi Amplifier
CON	Controller	HKL	Tailgate module
DME	Digital Motor Electronics	HUD	Head-up Display
DSC	Dynamic Stability Control	IBOC	In-Band On-Channel (HD Radio)
DSC-SEN	DSC Sensor	IBS	Intelligent Battery Sensor
DVD	Digital Video Disc changer	IHKA	Automatic Heating and Air Conditioning
EDC SHL	Electronic Damper Control, rear left satellite	JB	Junction Box
EDC SHR	Electronic Damper Control, rear right satellite	Kombi	Instrument cluster
EDC SVL	Electronic Damper Control, front left satellite	OC-3	Seat Occupancy Sensor (US)
EDC SVR	Electronic Damper Control, front right satellite	PDC	Park Distance Control
EGS	Electronic Transmission Control	QLT	Oil Quality/Level/Temperature sensor
EHC	Electronic Height Control		

cardiagn.com

Legend for E70 Bus System Overview - Cont.

Index	Explanation	Index	Explanation
RDC	Tire Pressure Control (TPM)	BSD	Bit-serial Data Interface
RDC-SEN	Tire Pressure Control (TPM -Sensor)	Crash-Sig	Crash Signal
RFK	Reversing Camera	D-CAN	Diagnosis CAN
RLSS	Rain/Driving lights/Solar Sensor	F-CAN	Chassis CAN
RSE	Rear Seat Entertainment	FlexRay	FlexRay Bus system
SBFA	Driver's Switch Cluster	K-Bus	Body Bus
SDARS	Satellite Radio Control Unit	K-CAN	Body CAN
SINE	Siren and Tilt Sensor	LIN-Bus	Local Interconnect Network Bus
SMBF	Passenger Seat Module	LoCAN	Local CAN
SMC	Stepper Motor Controller	MOST	Media Oriented Systems Transport
SMFA	Driver's Seat Module	MOST WUP	MOST wake-up line
SVBF	Passenger's Seat Adjustment	PT-CAN	Powertrain CAN
SVFA	Driver's Seat Adjustment	WUP	Wake-up Line
SZL	Steering Column Switch Cluster	1	CAS bus connection
TAGE	Electronic Outer Door Handle Module		
TCU	Telematics Control Unit		
TONS	Thermal Oil Level Sensor		
TOP-HIFI	Top Hi-Hi Amplifier		
VDM	Vertical Dynamics Management (EDC)		
VGSG	Transfer Case Control unit (VTG)		
VVT	Variable Valve Gear		

cardiagn.com

E70 Overall Network

The overall network in the E70 consists of various bus systems that enable communication between the individual control units. In view of the increasing interconnection of the control units, it is possible to use the sensors of one system throughout the network.

The sensors are connected to the control unit that initially requires the information logic-based and virtually in real time. This information, however, can also be made available to other control units.

Using the example of the vertical dynamics management (VDM), initially, the VDM control unit acquires the ride-height levels of the wheels. The dynamic headlight-range adjustment facility can also use this information for the purpose of adapting the beam height of the headlights. The VDM makes available the information via the corresponding bus systems to the footwell module.

Apart from the FlexRay and the D-CAN, all bus systems in the E70 are already known from other BMW models. This section outlines all bus systems in the E70.

This bus system is used for the first time for the data exchange in the area of the vertical dynamics management (VDM). It is used to exchange data between the VDM control unit and the EDC satellites.

Overview of Bus Systems

In principle, a distinction is made between two groups of bus systems:

- Main bus systems
- Sub-bus systems

Main bus systems are responsible for the data exchange between the control units throughout the vehicle system. This includes system functions such as diagnosis, network management, programming and encoding.

For example, when locking the doors in the E70, the status of the door contacts is read in via the footwell module. The information is transmitted via the K-CAN to the junction box control unit which in turn activates the central locking drive units.

Sub-bus systems exchange data within one function group. For example, the data of the driver's door switch cluster are read in by the junction box control unit and forwarded to the footwell module. The connection provided between the driver's door switch cluster and junction box control unit is a sub-bus known as the LIN-bus.

cardiagn.com

Main Bus Systems

Main Bus System	Data Rate	Bus Structure
D-CAN	500 Kbits/s	Linear, two-wire
K-CAN	100 Kbits/s	Linear two-wire, single wire mode possible for emergency operation
PT-CAN	500 Kbits/s	Linear, two-wire
F-CAN	500 Kbits/s	Linear, two-wire
FlexRay	10 Mbits/s	Star, two wire
MOST	22.5 Mbits/s	Ring, fiber optics

Changes to Main Bus Systems

The most important changes to the main bus systems include.

- Diagnosis CAN D-CAN now with modified data rate (500 Kbit/s)
- FlexRay - new bus system in area of chassis and suspension control systems, vertical dynamics management (VDM).

As before, the central gateway function is integrated in the junction box control unit.
A further gateway that sends diagnosis jobs between PT-CAN and FlexRay is located in the VDM control unit.

cardiagn.com

Diagnosis CAN

After connecting a BMW diagnostic system, the gateway (junction box control unit) places the requests of the BMW diagnostic system on the internal buses. The responses undergo the same process in opposite direction.

In future, a new communication protocol will be used for diagnosis. The D-CAN will replace worldwide the previous diagnostic interface and its protocol which is based on KWP 2000 (Keyword Protocol 2000).

The reason for the changeover is a new legal requirement in the USA requiring that all vehicles be equipped with the D-CAN as from model year 2008. The transitional phase will begin in September 2006. The E70 will be one of the first vehicles equipped with D-CAN.

This modification will then be phased-in on all BMW models. An optical programming system OPS or an optical testing and programming system OPPS as well as an OBD connection cable for the OPS with following identification are required to perform diagnostic procedures on these vehicles.

cardiagn.com

Location of D-CAN Connector

The diagnosis socket is located under the dashboard on the driver's side.
D-CAN support with the diagnostic head is technically not possible. The following interfaces can be used:

- OPS
- OPPS

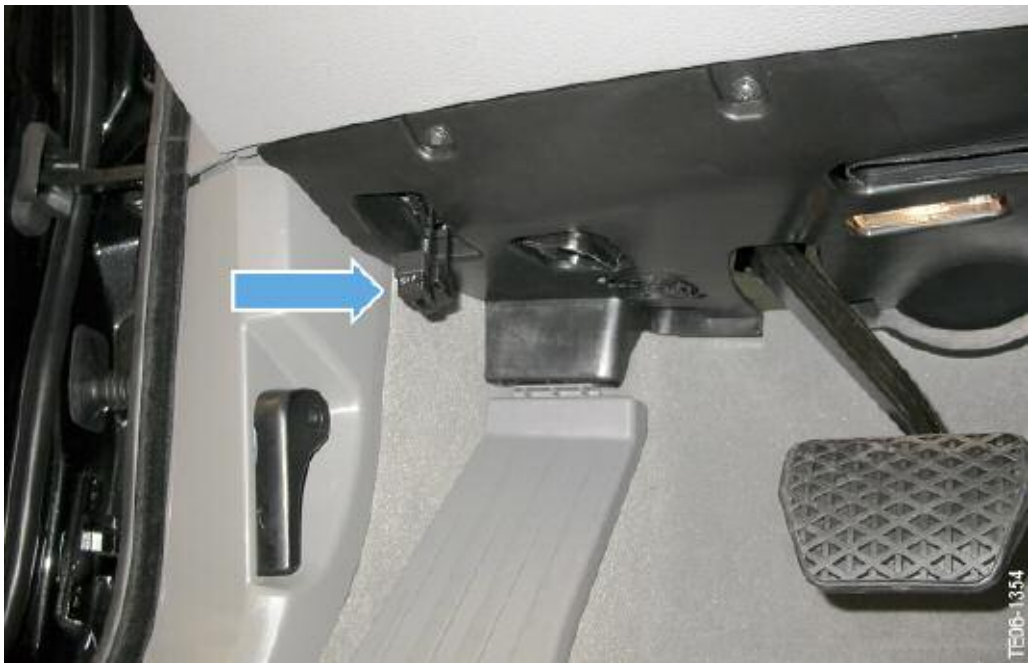

OBD access in the vehicle will remain unchanged. The pin assignments are as follows:

- 16 = Terminal 30
- 5 = Terminal 31
- 14 + 6 = Communication connections

The diagnosis socket is located under the dashboard on the driver's side.

cardiagn.com

Body CAN

The known familiar CAN-bus systems are still used on the E70. In view of their distribution in the vehicle, the control units are linked at various nodal points.

Several connections for the K-CAN are provided not only in the wiring harness but also at the junction box control unit.

Electrically, there is only one K-CAN. This means, from an electrical point of view, all linked control units are connected in parallel to the K-CAN.

Physically, various control units are connected at nodal points or at one control unit, i.e. the junction box control unit.

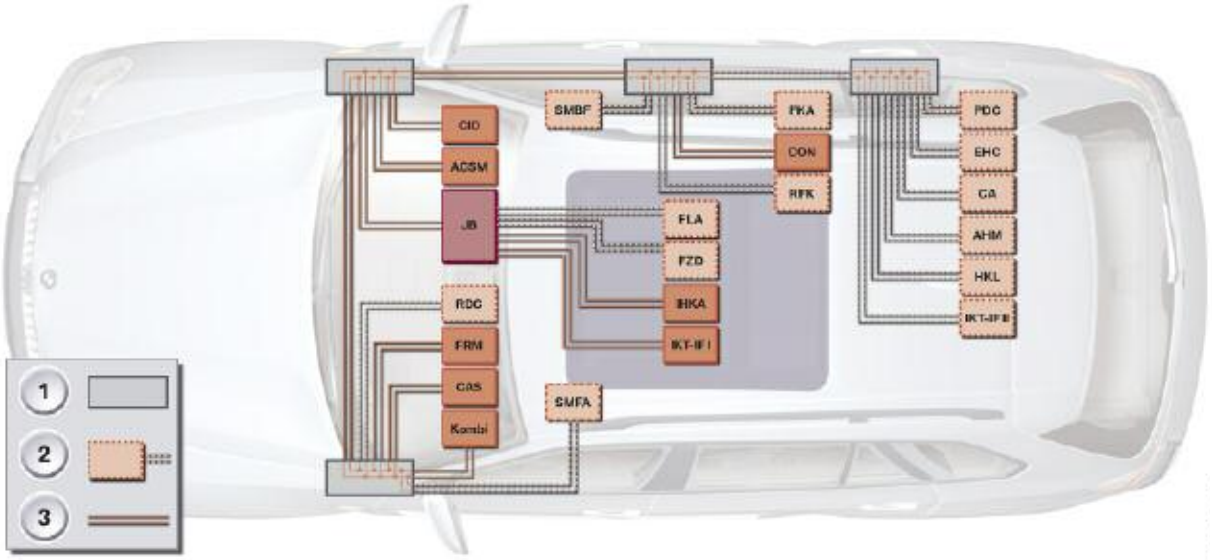

Index	Explanation	Index	Explanation
1	K-CAN distributor	3	K-CAN
2	Optional equipment		

cardiagn.com

NOTES PAGE

cardiagn.com

MOST Bus System

Features of the MOST system MOST is a data bus technology for multimedia applications that was specifically developed for use in motor vehicles.

MOST stands for "Multimedia Oriented System Transport". The MOST bus uses light pulses for the purpose of transmitting data and is based on a ring structure. The data are transmitted only in one direction in the ring.

MOST technology satisfies two important requirements:

1. The MOST bus transports control data as well as data for audio, navigation and other services.
2. MOST technology provides a logical model for controlling the data variety and complexity, i.e. the MOST application framework. The MOST application framework organizes functions of the overall system.

MOST is capable of controlling and dynamically managing distributed functions in the vehicle. An important characteristic of a multimedia network is that it not only transports control data and sensor data such as on the CAN-bus and LIN-bus for instance.

In addition, a multimedia network can also transmit digital audio and video signals and transport graphics as well as other data services.

Features

- High data rate 22.5 Mbits/s
- Synchronous/asynchronous data transmission
- MOST assigns the control units to nodes in the bus
- Fiber optics cables as transmission medium
- Ring structure

Each MOST control unit can send data on the MOST bus. Only the gateway control unit can initiate data exchange between the MOST bus and other bus systems. The control units, CHAMP and the car communication computer, are used as the gateway and master control unit.

The data are transmitted on various channels on the MOST bus. Corresponding to the application, the data are sent to different time windows within the data flow (channels).

cardiagn.com

Control Channel
Control signals such as volume control for the Top HiFi amplifier and data for diagnosis purposes are sent via the control channel.

Synchronous Channel
The synchronous channel is mainly reserved for the purpose of sending audio data.

Asynchronous Channel
The asynchronous channel transfers image data from the navigation system such as the direction arrows. The control channel and the asynchronous channel are used for programming the control units on the MOST bus and correspondingly adapt it to the MOST-direct access

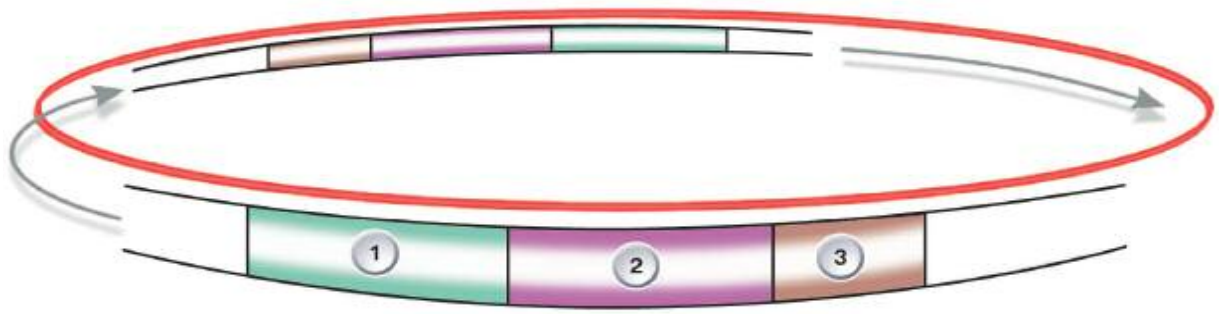

Index	Explanation	Index	Explanation
1	Synchronous channel	3	Control channel
2	Asynchronous channel		

Control Unit Logon
Precisely in the same way as on the E6x models, the control units installed on the MOST bus are stored in a registration file in the master control unit. The corresponding data are stored during the production process and, in connection with control unit retrofits, after programming the respective control unit.

The control units and their sequence on the MOST bus are stored in this registration file. With the fiber optics connector, it is possible to connect control units in the rear area of the E70 after factory production or after a repair in different order.

With the aid of the registration file, the BMW diagnosis system can determine the installed control units and their order. During their start-up procedure, all control units on the MOST bus send their identifier to the master control unit. In this way, the master control unit detects what control units are connected to the MOST bus. A corresponding fault location can be concluded in diagnosis if the login of one or several control units is not received.

cardiagn.com

MOST Users

In the E70, the MOST bus is used for the components in information/communication systems. The CCC, or the CHAMP is used as the master control unit. Other bus users may be:

- CD changer/DVD changer
- Top-HiFi amplifier
- Satellite tuner (SDARS), IBOC
- Telephone
- Head-up display (HUD)

The following overview shows a possible equipment configuration.

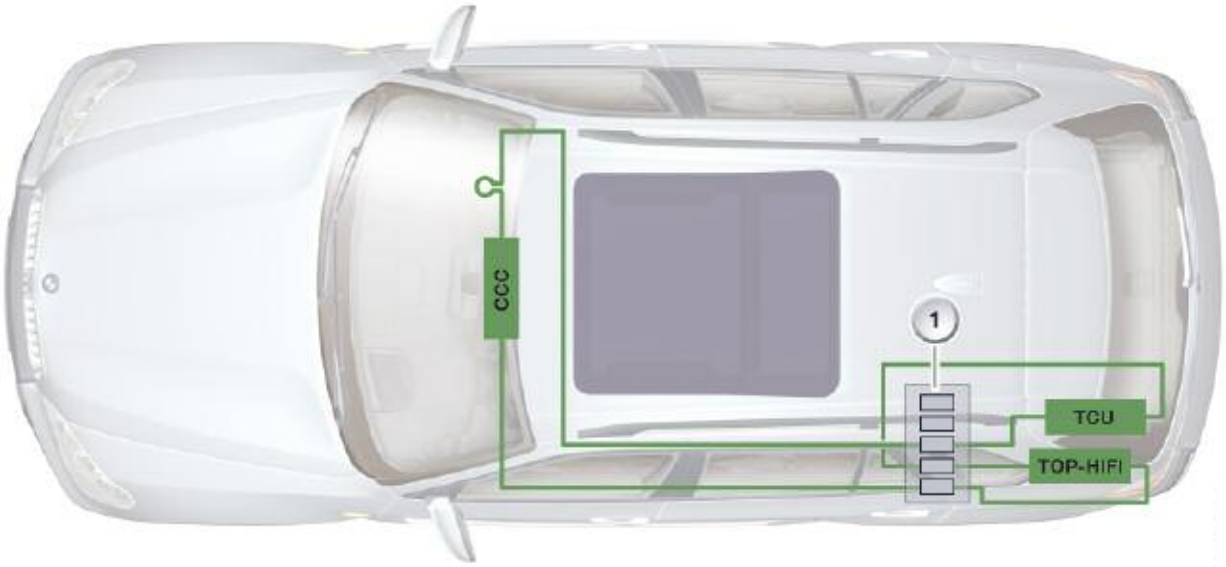

Index	Explanation	Index	Explanation
CCC	Car Communications Computer	TOP-Hifi	Top Hi-Fi amplifier
TCU	Telematics Control Unit	1	Fiber optic connector

Light Direction

Data are always sent in one direction on the MOST bus. Each control unit can send data on the MOST bus. The physical light direction is from the master control unit (CHAMP, multi-audio system controller or car communication computer) to the fiber optics connector and from here to the control units in the luggage compartment (Top HiFi amplifier, CD-changer etc.). From the last control unit, the light returns via the MOST-direct access to the master control unit.

cardiagn.com

MOST Access

As on all vehicles equipped with a MOST bus system, direct MOST access is also provided on the E70.

The direct MOST access is located on the right hand side under the dashboard in the vehicle interior.

A cover provides direct access to the MOST.

The two connectors must be removed from the holder secured on the cover.

The two connectors are then plugged together. The OPS/ OPPS can now be connected to the connector as usual.

cardiagn.com

Fiber Optics Connector

The use of the fiber optics connector provides the advantage of being able to easily retrofit control units in the area of the luggage compartment. The connector is located behind the left-hand cover next to the rear seat backrest. It is arranged in the MOST bus system between the front area (head unit, CDC and HUD) and the rear area of the vehicle (TEL etc.).

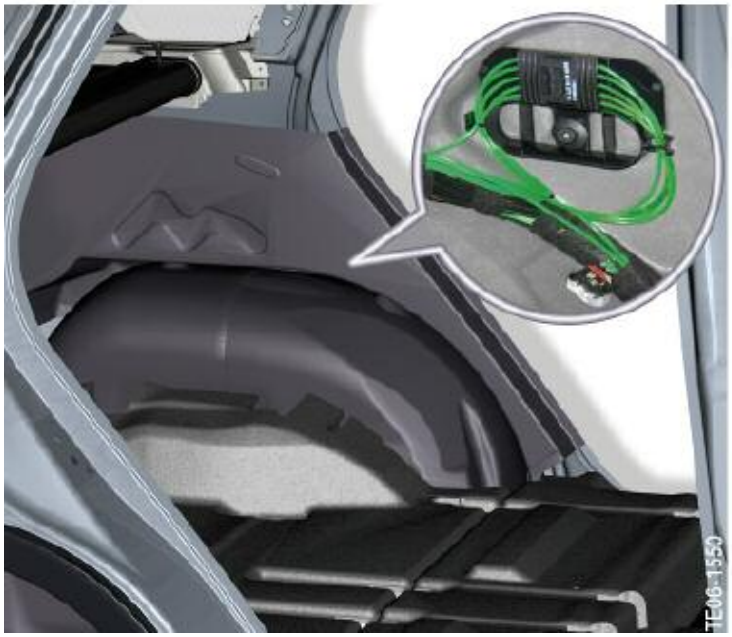

One or two fiber optics connectors are installed corresponding to the equipment configuration. One is responsible for the factory-installed control units. The other is used for the preparations for options.

A fiber optics connector for option preparations is installed only if option preparations are actually installed. The ends of the fiber optics conductors for options are always grouped together on the same row in the fiber optics connector to avoid damage to the ends of the fiber optics conductors.

As soon as the retrofit is installed, the fiber optics connectors are reconnected according to instructions and integrated in the MOST bus.

Identification of Fiber Optics Conductors

The fiber optics conductors are identified at their ends making it is possible to identify the control unit from which the fiber optics conductor comes or goes.

cardiagn.com

NOTES PAGE

cardiagn.com

FlexRay

In the future, driving dynamics control systems, driver assistance systems and their innovative interconnection will be ever more important for the differentiation of the BMW badge. Since today's networking systems using the CAN-bus have already reached their limit, it is necessary to find a suitable alternative for CAN.

In co-operation with Daimler Chrysler AG and the semiconductor manufacturers Freescale (formerly Motorola) and Philips, BMW AG founded the FlexRay consortium in 1999 for the purpose of developing innovative communication technology.

The consortium was soon joined by further partners, including Bosch and General Motors and to date, the Ford Motor Company, Mazda, Elmos and Siemens VDO have also decided to join. In the meantime, almost all significant car makers and suppliers throughout the world have joined the FlexRay consortium.

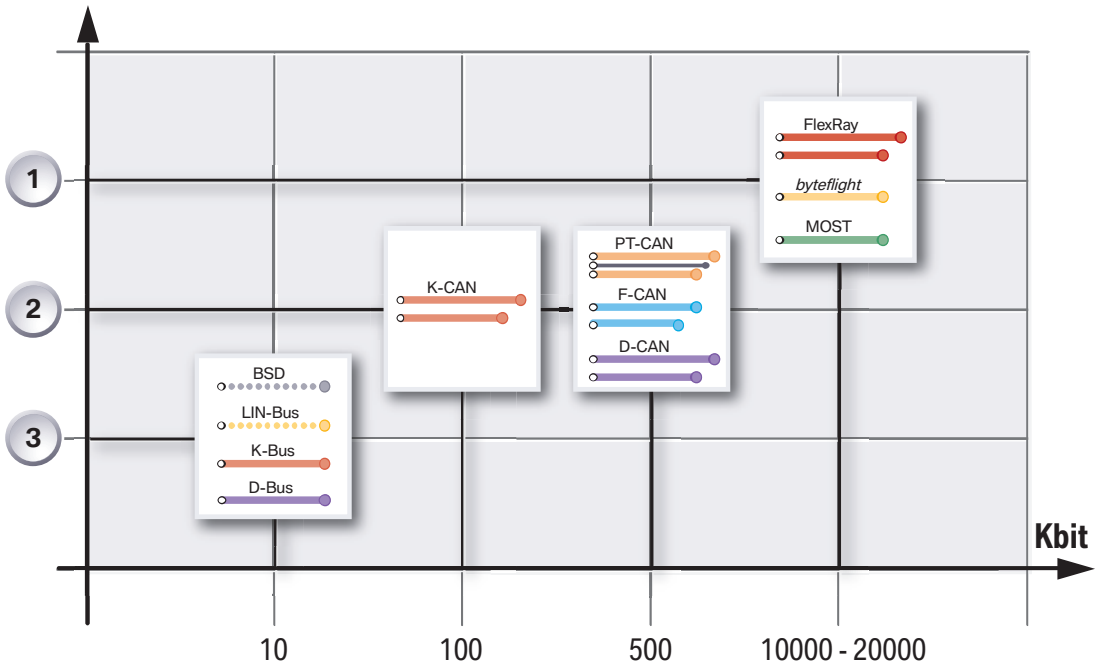

Index	Explanation
1	Real time capabilities, deterministic (strictly defined) and redundant
2	Conditional real time capabilities - sufficient for control systems
3	No real time capabilities

FlexRay is a new communication system which aims at providing reliable and efficient data transmission with real-time capabilities between the electrical and mechatronic components for the purpose of interconnecting innovative functions in motor vehicles, both today and in the future.

cardiagn.com

Development of the new FlexRay communication system was prompted by the ever growing technological requirements placed on a communication system for interconnecting control units in motor vehicles and the realization that an open and standardized solution was needed for infrastructure systems.

FlexRay provides an efficient protocol for real-time data transmission in distributed systems as used in motor vehicles.

With a data transmission rate of 10 Mbits/s, the FlexRay is distinctly faster than the data buses used in the area of the chassis, drive train and suspension of today's motor vehicles.

In addition to the higher bandwidth, FlexRay supports deterministic data transmission and can be configured such that reliable continued operation of remaining communication systems is enabled even in the event of individual components failing.

What are the advantages of FlexRay?

- High bandwidth (10 Mbits/s compared to 0.5 Mbits/s of the CAN)
- Deterministic (= real-time capabilities) data transmission
- Reliable data communication
- Supports system integration
- Standard in automotive industry

FlexRay - a standard in the automotive industry

The FlexRay bus system is an industrial standard and is therefore supported and further developed by many manufacturers.

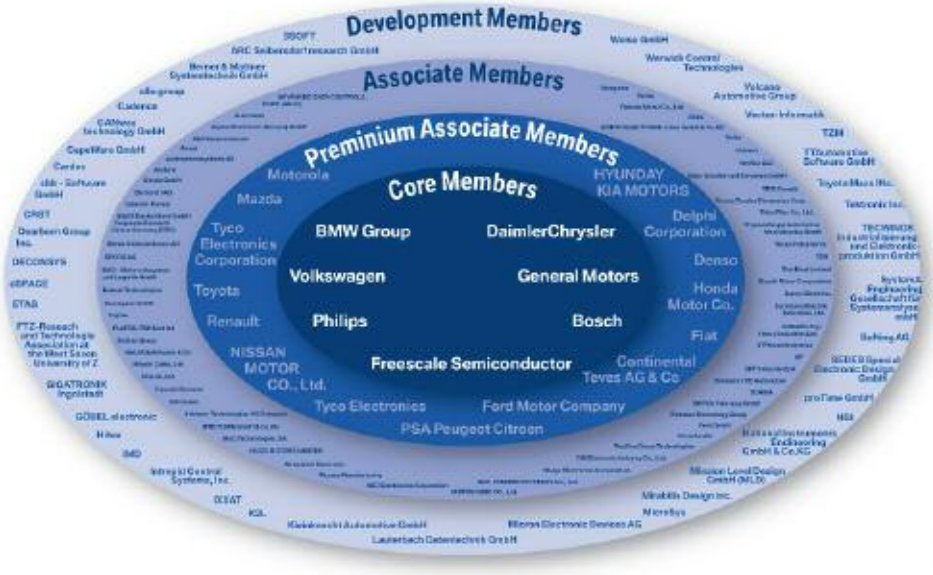

cardiagn.com

FlexRay - Use in the E70

With the launch of the E70, the FlexRay bus system will be used for the first time worldwide in a standard production vehicle. The FlexRay bus system establishes the connection between the VDM control unit (vertical dynamics management) and the EDC satellites at the shock absorbers. A detailed functional description of the overall system can be found in the reference information - “Vertical Dynamics Systems”.

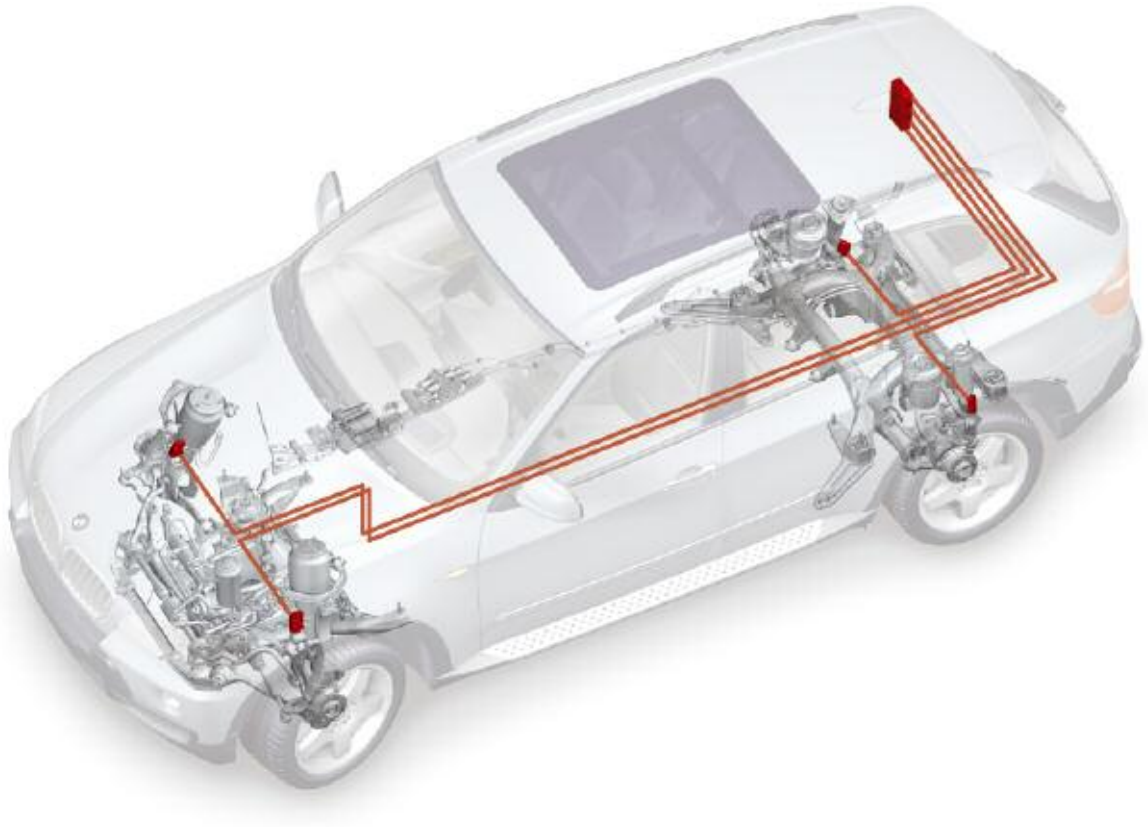

cardiagn.com

NOTES PAGE

cardiagn.com

System Overview

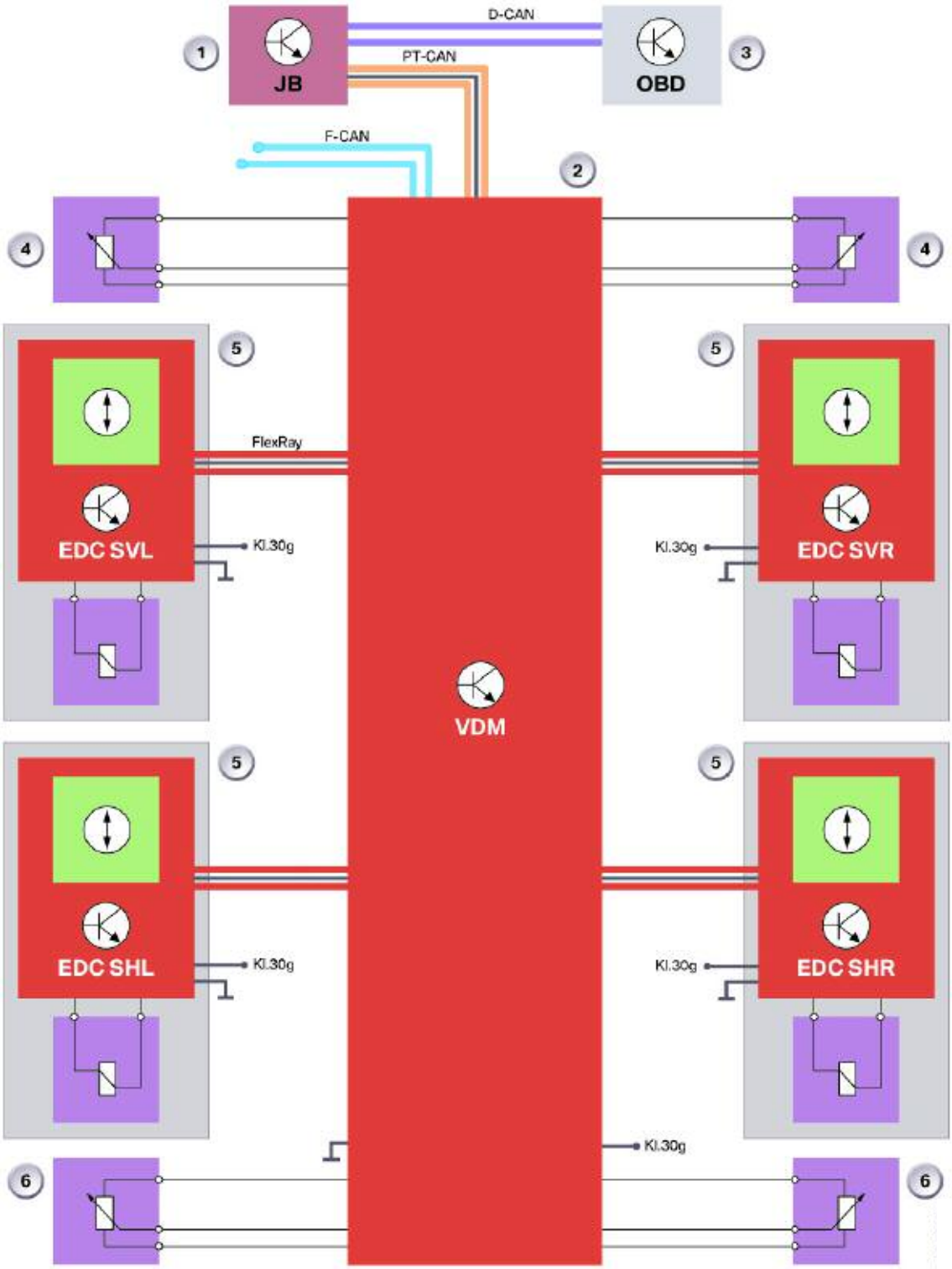

cardiagn.com

Legend for System Overview

Index	Explanation
1	Junction box control unit
2	Vertical Dynamics management (VDM)
3	Diagnosis connector
4	Ride height sensors, front
5	EDC satellites with vertical acceleration sensors and solenoid valves
6	Ride height sensors, rear
D-CAN	Diagnosis CAN
F-CAN	Chassis CAN
PT-CAN	Powertrain CAN
FlexRay	FlexRay bus system
KL 30 g	Terminal 30g

cardiagn.com

Properties of FlexRay

The most important properties of the FlexRay bus system are outlined in the following:

- Bus topology
- Transmission medium - signal properties
- Deterministic data transmission
- Bus protocol

Bus Topology

The FlexRay bus system can be integrated in various topologies and versions in the vehicle.

The following topologies can be used:

- Line-based bus topology
- Point-to-point bus topology
- Mixed bus topology

Line-based Bus Topology

All control units (SG1...SG3) in line-based topology are connected by means of a two-wire bus, consisting of two twisted copper cores. This type of connection is also used on the CAN-bus. The same information but with different voltage level is sent on both lines.

The transmitted differential signal is immune to interference. The line-based topology is suitable only for electrical data transmission.

Line-based bus topology

Point-to-point Bus Topology

The satellites (control units SG2...SG5) in point-to-point bus topology are each connected by a separate line to the central master control unit (SG1). Point-to-point topology is suitable for both electrical as well as optical data transmission.

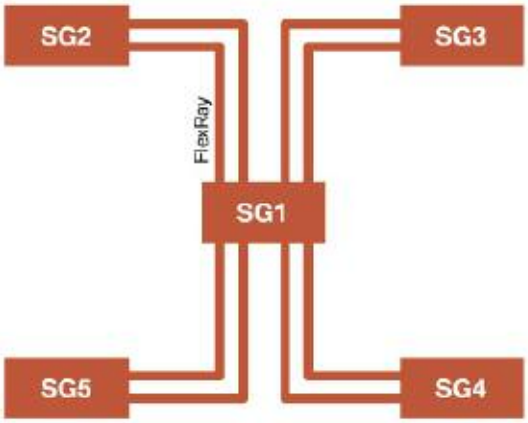

Point to point bus topology

cardiagn.com

Mixed Bus Topology

Mixed bus topology caters for the use of different topologies in one bus system. Parts of the bus system are line-based while other parts are point-to-point.

Redundant Data Transmission

Fault-tolerant systems must ensure continued reliable data transmission even after failure of a bus line. This requirement is realized by way of redundant data transmission on a second data channel.

A bus system with redundant data transmission uses two independent channels.
Each channel consists of a two-wire connection. In the event of one channel failing, the information of the defective channel can be transmitted on the intact channel. FlexRay enables the use of mixed topologies also in connection with redundant data transmission.

Bus Topology of FlexRay in the E70

The physical configuration of the FlexRay bus system in the E70 is point-to-point.
All EDC satellites are individually connected via plug connections to the VDM control unit.

Internally, however, the left and right EDC satellites are connected to form a line-based topology. The two lines are connected by means of a double point-to-point connection consisting of two bus drivers. Every item of information that is sent from one of the EDC satellites or from the central VDM control unit reaches all connected control units.

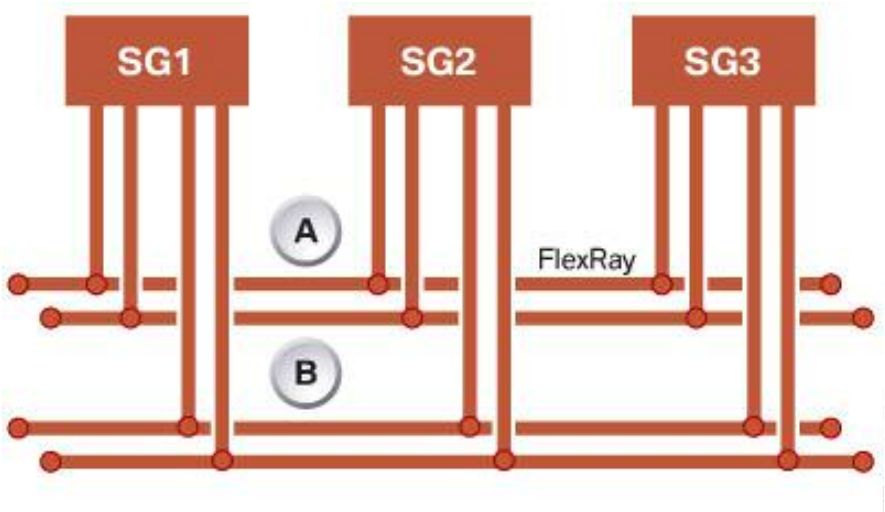

Index	Explanation
A	Channel 1
B	Channel 2

cardiagn.com

VDM System Schematic

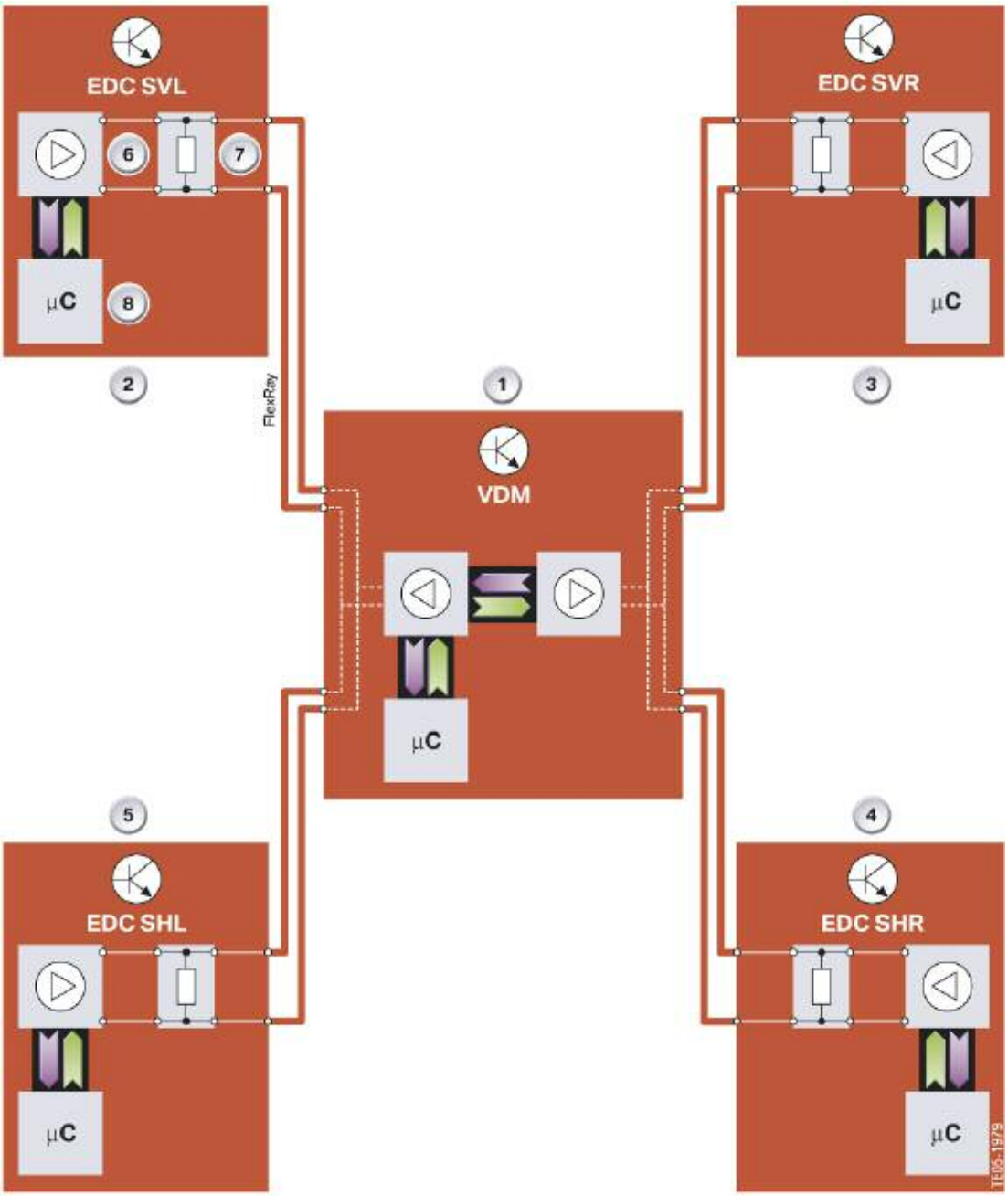

Index	Explanation	Index	Explanation
1	Vertical Dynamics Management (VDM)	6	Bus driver
2	EDS satellites, front left	7	Terminating resistor
3	EDS satellites, front right	8	Microprocessor
4	EDS satellites, rear right	FlexRay	FlexRay bus system
5	EDS satellites, rear left		

cardiagn.com

Transmission Medium - Signal Properties

The bus signal of the FlexRay must be within defined limits. A good and bad image of the bus signal is depicted below. The electrical signal must not enter the inner area neither on the time axis nor on the voltage axis. The FlexRay bus system is a bus system with a high data transmission rate and therefore with rapid changes in the voltage level.

The voltage level as well as the rise and drop of the voltage (edge steepness) are precisely defined and must be within certain values. There must be no infringements of the marked "fields" (green and red hexagon).

Electrical faults resulting from incorrect cable installation, contact resistance etc. can cause data transmission problems.

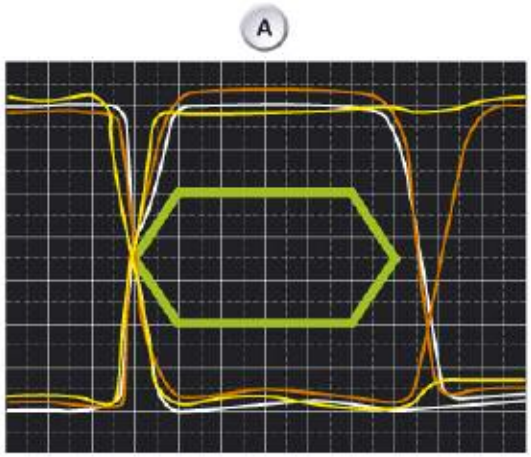

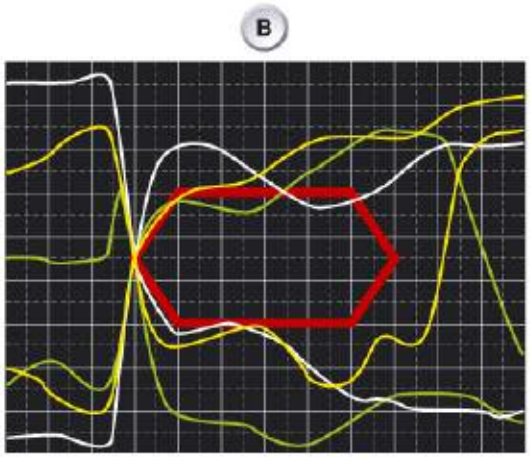

Index	Explanation	Index	Explanation
A	Good image	B	Bad image

The images shown above can be depicted only with very fast oscilloscopes.
The oscilloscope in the BMW diagnostic system is not suitable for representing such images.

The voltage ranges of the FlexRay bus system are:

- System ON - no bus communication 2.5 V
- High signal - 3.1 V (voltage signal rises by 600 mV)
- Low signal - 1.9 V (voltage signal falls by 600 mV)

The voltage values are measured with respect to ground.

cardiagn.com

Deterministic Data Transmission

The CAN-bus system is an event-controlled bus system. Data are transmitted when an event occurs. In the event of an accumulation of events, delays may occur before further information can be sent. If an item of information cannot be sent successfully and free of errors, this information is continually sent until the communication partner confirms its receipt.

If faults occur in the bus system, this “event controlled” information can back up causing the bus system to overload, i.e. there is a significant delay in the transmission of individual signals. This can result in poor control characteristics of individual systems.

The FlexRay bus system is a time-controlled bus system that additionally provides the option of transmitting sections of the data transmission event-controlled. In the time controlled part, time slots are assigned to certain items of information. One time slot is a defined period of time that is kept free for a specific item of information (e.g. engine speed).

Consequently, important periodic information is transmitted at a fixed time interval in the FlexRay bus system so that the system cannot be overloaded.

Other less time-critical messages are transmitted in the event-controlled part. An example of deterministic data transmission is outlined in the following.

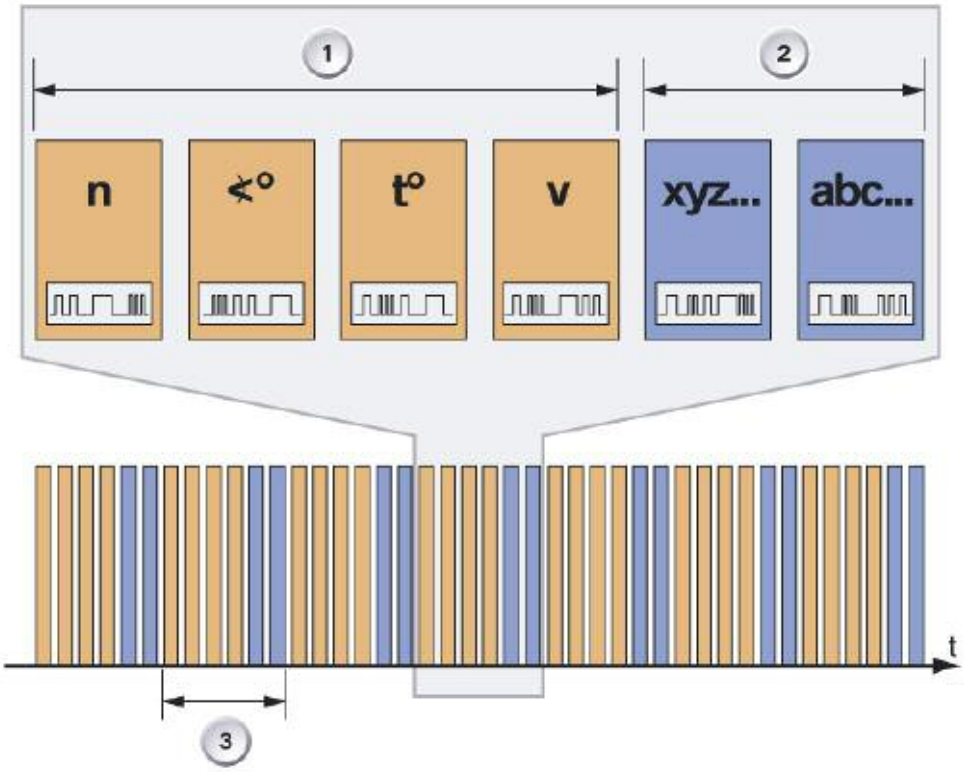

cardiagn.com

Index	Explanation
1	Time-controlled part of cyclic data transmission
2	Event-controlled part of cyclic data transmission
3	Cycle (5 ms total cycle length of which 3 ms static (= time-controlled) and 2 ms dynamic (= event-controlled)
n	Engine speed
<	Angle
t	Temperature
v	Road speed
xyz..abc..	Event-controlled information
t	Time

Bus Protocol

Deterministic data transmission ensures that each message in the time-controlled part is transmitted in real time. Real time means that the transmission takes place within a defined time.

Therefore, important bus messages are not sent too late due to overloading of the bus system. If lost due to a temporary problem in the bus system (e.g. EMC problem) a message cannot be sent again. A current value is sent in the next assigned time slot.

High Bandwidth

The FlexRay bus system operates with a data transmission rate of 10 Mbits/s.
This speed corresponds to 20 times the data transmission rate of the PT-CAN.

Synchronization

A common time base is necessary in order to ensure synchronous execution of individual functions in interconnected control units. Time matching must take place via the bus system as all control units operate with their own clock generator.

The control units measure the time of certain synchronization bits, calculate the mean value and adapt their bus clock to this value. This system ensures that even minimal time differences do not cause transmission errors in the long term.

cardiagn.com

FlexRay in the E70

The FlexRay bus system in the E70 is designed as a two-wire, single-channel bus system. Acting as the gateway, the VDM control unit establishes the connection between the PT-CAN and FlexRay bus systems.

Data communication between the EDC satellites on the FlexRay and the other control units installed in the E70 takes place via the VDM control unit.

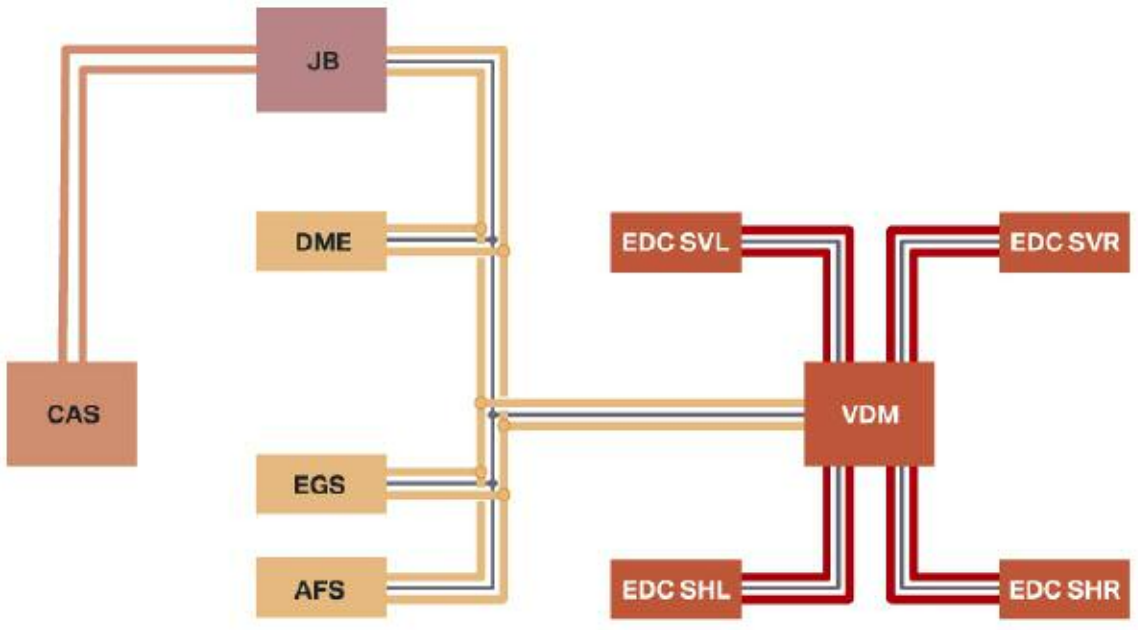

Wake-up and Sleep Characteristics

The control units are activated by means of an additional wake-up line. The wake-up line has the same function as the previous wake-up line (15WUP) in the PT-CAN. The signal curve corresponds to the signal curve of the PT-CAN.

As soon as the bus system is woken, the VDM receives a High level on the PT-CAN and transfers this signal to the wake-up line of the FlexRay, thus also waking the satellites.

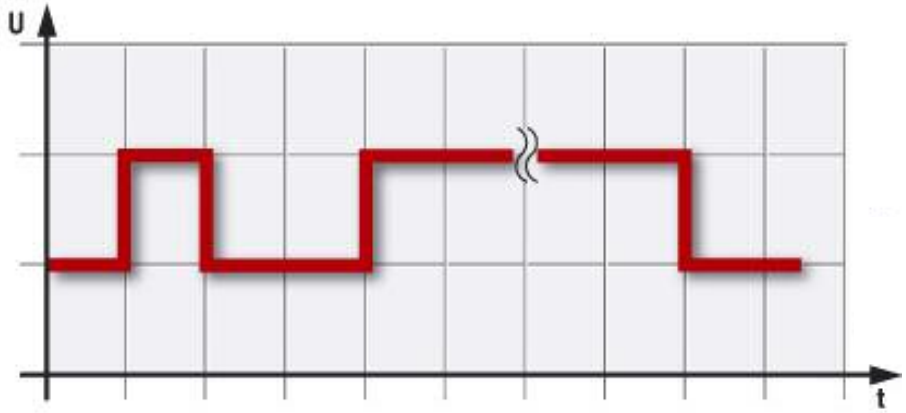

cardiagn.com

The "wake-up voltage curve" graphic shows the typical behavior of the voltage curve in response to unlocking and starting the vehicle.

Phase 1:

Driver unlocks the car, the CAS control unit activates the K-CAN and the PT-CAN, the voltage level in the PT-CAN briefly goes to High, the VDM copies the signal and transfers it to the wake-up line on the FlexRay.

Phase 2:

Car is opened, terminal R is still OFF, the voltage levels in the bus systems drop again.

Phase 3:

Car is started, terminal 15 is ON, the voltages remain at the set levels until terminal 15 is turned off again.

Phase 4:

The complete vehicle network must assume sleep mode at terminal R OFF in order to avoid unnecessary power consumption. Each control unit in the network signs off to ensure that all control units "are sleeping". Only when all EDC satellites have signed off at the VDM control unit can this control unit pass on this information to the PT-CAN and therefore to the complete network. An error message is stored if this is not the case. This error message is then evaluated as part of the energy diagnosis procedure.

Wiring

The wiring of the FlexRay bus in the E70 is executed as a sheathed, two-core, twisted cable. The sheathing protects the wires from mechanical damage. The terminating resistors are located in the EDC satellites. Each satellite has one terminating resistor. Since the surge impedance (impedance of high-frequency lines) of the lines depends on external influencing factors, the terminating resistors are precisely matched to the required resistance.

The four sections of line to the satellites can be checked relatively easily by means of a resistance measuring instrument (ohmmeter, multimeter). The resistance should be measured from the VDM control unit. See BMW diagnostic system for pin assignments

The following conclusions can be made:

RBP-BM: < or = 10 Ohms – There is a short circuit in this section of line.

RBP-BM: 10-90 Ohms – This section of line is damaged (e.g. moisture in connector, line pinched)

RBP-BM: 90-110 Ohms – This section of line is OK and the satellite is connected (Note: Impedance errors are not recognized)

RBP-BM: > 110 Ohms – There is a break in the line or the satellite is not connected or there is a break in the connection to the satellites.

cardiagn.com

Note: Measuring the resistance of the FlexRay lines cannot provide a 100% deduction in terms of the system wiring. In the case of damage such as pinching or connector corrosion, the resistance may be within the tolerance when the system is static.

In dynamic mode, however, electrical influences can cause increased surge resistance, resulting in data transmission problems.

Note: It is possible to repair the FlexRay bus. If damaged, the cables can be connected using conventional cable connectors. Special requirements, however, must be observed when reinstalling the system.

The wiring of the FlexRay system consists of twisted lines. This twisted arrangement (transposition) should be retained as far as possible. Repaired areas with stripped insulation must be sealed again with shrink-fit tubing. Water can affect the surge resistance and therefore the efficiency of the bus system.

Plug Connections

The two plug connections contain the power supply of the control units, the wake-up line and the bus connection with wake-up line. The connection to the satellites in the wheel arch is made with waterproof plugs. Two plugs are used:

Plug 1, black	Terminal 30g Terminal 31 Wake-up line
Plug 1, blue	FlexRay (green wire) FlexRay (pink wire)

cardiagn.com

Sub-bus Systems

Sub-bus systems are known from the other BMW models.

Main Bus System	Data Rate	Bus Structure
K-Bus	9.6Kbits/s	Linear, single-wire
LIN-Bus	9.6/19.2 Kbits/s	Linear, single-wire
BSD	9.6Kbits/s	Linear, single-wire

K-bus Protocol

The term "K-bus (protocol)" is used for a series of sub-bus systems in the bus overview. These sub-bus systems are used for various purposes. The K-bus protocol used here is a common component already used in predecessor models. The sub-bus is used in connection with the following systems:

- Connection between SINE and FZD
- Connection between ACSM and TCU
- Electronic outer door handle module
- Comfort Access
- Seat adjustment switch on multifunction seat
- EWS connection between CAS and DME+EGS (N52).

LIN-bus

The LIN-bus was used for the first time on the E46 for controlling the outside mirrors. The LIN-bus realizes the following connections in the E70:

- Footwell module to driver's door switch cluster
- Footwell module to outside mirrors High
- Roof functions center to rain/driving lights/ solar sensor
- Actuation of IHKA actuator motors
- Footwell module to stepper motor controller
- Connections between gear selector lever module and electronic transmission control

BSD

The bit-serial data interface BSD is still used on the E70. It makes the following connections from the engine management to the corresponding subsystems:

- Intelligent battery sensor
- Generator regulator
- Oil condition sensor
- Electric coolant pump

cardiagn.com

Terminating Resistors

Terminating resistors are used to ensure exact signal progression in the bus systems. These terminating resistors are located in the control units of the bus systems.

Terminating resistors are located in each control unit connected to the K-CAN.
In connection with the main bus systems F-CAN and PT-CAN, terminating resistors are always located only in two control units on the bus.

The terminating resistors in the F-CAN are located in the control units:

- Steering column switch cluster
- Dynamic stability control

The terminating resistors in the PT-CAN are located in the control units:

- Electromagnetic parking brake
- Dynamic stability control

cardiagn.com

NOTES PAGE

cardiagn.com