2015 4C

OWNER'S MANUAL

Downloaded from www.Manualslib.com manuals search engine

n Canada, the name
to be deleted and the
ubstitution therefore.

st frequent causes of

impaired with blood
minimum. If you are
a designated non-
or use public trans-

d to an accident.
, your reflexes are
npaired when you
k and then drive.

This manual illustrates and describes the operation of features and equipment that are either standard or optional on this vehicle. This manual may also include a description of features and equipment that are no longer available or were not ordered on this vehicle. Please disregard any features and equipment described in this manual that are not on this vehicle.

Chrysler Group LLC reserves the right to make changes in design and specifications, and/or make additions to or improvements to its products without imposing any obligation upon itself to install them on products previously manufactured.

Copyright © 2014 Chrysler Group LLC

Downloaded from www.Manualslib.com manuals search engine

TABLE OF CONTENTS

SECTION		PAGE
1	INTRODUCTION	3
2	THINGS TO KNOW BEFORE STARTING YOUR VEHICLE	9
3	UNDERSTANDING THE FEATURES OF YOUR VEHICLE	71
4	UNDERSTANDING YOUR INSTRUMENT PANEL	109
5	STARTING AND OPERATING	151
6	WHAT TO DO IN EMERGENCIES	223
7	MAINTAINING YOUR VEHICLE	245
8	MAINTENANCE SCHEDULES	307
9	IF YOU NEED CONSUMER ASSISTANCE	317
10	INDEX	327

Downloaded from www.Manualslib.com manuals search engine

Downloaded from www.Manualslib.com manuals search engine

INTRODUCTION

CONTENTS

■ INTRODUCTION 4
■ HOW TO USE THIS MANUAL 5
■ WARNINGS AND CAUTIONS 7
■ VEHICLE IDENTIFICATION NUMBER 7
■ VEHICLE MODIFICATIONS/ALTERATIONS 8

Downloaded from www.Manualslib.com manuals search engine

INTRODUCTION

Congratulations on selecting your new vehicle. Be assured that it represents precision workmanship, distinctive styling, and high quality - all essentials that are traditional to our vehicles.

This Owner's Manual has been prepared with the assistance of service and engineering specialists to acquaint you with the operation and maintenance of your vehicle. It is supplemented by Warranty Information, and various customer-oriented documents. Please take the time to read these publications carefully. Following the instructions and recommendations in this manual will help assure safe and enjoyable operation of your vehicle.

The enclosed Warranty Information lists the services that FIAT Group Automobiles offers to its customers:

- The Warranty Certificate with terms and conditions for maintaining its validity
- The range of additional services available to FIAT Group Automobiles customers

NOTE: After reviewing the owner information, it should be stored in the vehicle for convenient referencing and remain with the vehicle when sold.

When it comes to service, remember that your authorized dealer knows your vehicle best, has factory-trained technicians and genuine parts, and cares about your satisfaction.

Downloaded from www.Manualslib.com manuals search engine

HOW TO USE THIS MANUAL

Consult the Table of Contents to determine which section contains the information you desire.

Since the specification of your vehicle depends on the items of equipment ordered, certain descriptions and illustrations may differ from your vehicle's equipment.

The detailed index at the back of this Owner's Manual contains a complete listing of all subjects.

Consult the following table for a description of the symbols that may be used on your vehicle or throughout this Owner's Manual:

Downloaded from www.Manualslib.com manuals search engine

Downloaded from www.Manualslib.com manuals search engine

WARNINGS AND CAUTIONS

This Owners Manual contains **WARNINGS** against operating procedures that could result in a collision or bodily injury. It also contains **CAUTIONS** against procedures that could result in damage to your vehicle. If you do not read this entire Owners Manual, you may miss important information. Observe all Warnings and Cautions.

VEHICLE IDENTIFICATION NUMBER

The Vehicle Identification Number (VIN) is found on the left front corner of the instrument panel, visible through the windshield. This number also appears engraved on an Aluminum plate glued and riveted on the floor crossmember under the passenger seat.

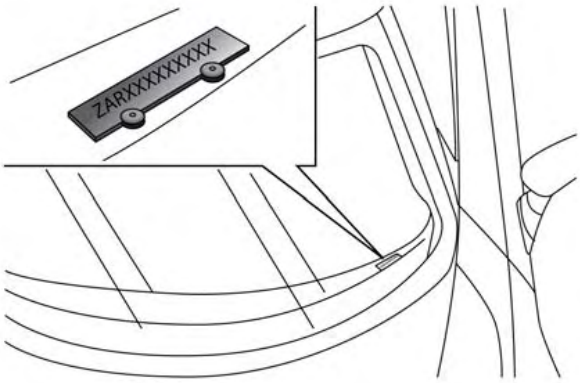

Vehicle Identification Number

NOTE: It is illegal to remove or alter the VIN.

Downloaded from www.Manualslib.com manuals search engine

VEHICLE MODIFICATIONS/ALTERATIONS

WARNING!

Any modifications or alterations to this vehicle could seriously affect its roadworthiness and safety and may lead to a collision resulting in serious injury or death.

Downloaded from www.Manualslib.com manuals search engine

THINGS TO KNOW BEFORE STARTING YOUR VEHICLE

CONTENTS

- A WORD ABOUT YOUR KEYS 11
  - Ignition Key Removal 11
  - Locking Doors With A Key 13
  - Key-In-Ignition Reminder 13
- SENTRY KEY® 13
  - Replacement Keys 14
  - General Information 14
- VEHICLE SECURITY ALARM SYSTEM — IF EQUIPPED 15
  - To Arm The System 15
  - To Disarm The System 16
- ILLUMINATED ENTRY 17
- REMOTE KEYLESS ENTRY (RKE) — IF EQUIPPED 17
  - To Unlock The Doors 18
  - To Lock The Doors 18
  - Transmitter Battery Replacement 19
  - General Information 21
- DOOR LOCKS 21
  - Central Door Locking/Unlocking 21

Downloaded from www.Manualslib.com manuals search engine

- Locking/Unlocking Doors From The Inside . . .23
- Emergency Door Locking Device 23
- Door Opening/Closing Mechanism Reset 24

■ WINDOWS 25
- Power Windows 25

■ DECKLID 27

■ OCCUPANT RESTRAINT SYSTEMS 30
- Seat Belt Systems 31
- Supplemental Restraint System (SRS) 41
- Child Restraints 55

■ ENGINE BREAK-IN RECOMMENDATIONS 65

■ SAFETY TIPS 66
- Transporting Passengers 66
- Exhaust Gas 67
- Safety Checks You Should Make Inside The Vehicle 68
- Periodic Safety Checks You Should Make Outside The Vehicle 69

Downloaded from www.Manualslib.com manuals search engine

A WORD ABOUT YOUR KEYS

The key fob contains the Remote Keyless Entry (RKE) transmitter with an integrated key. To use the mechanical key simply push the mechanical key release button.

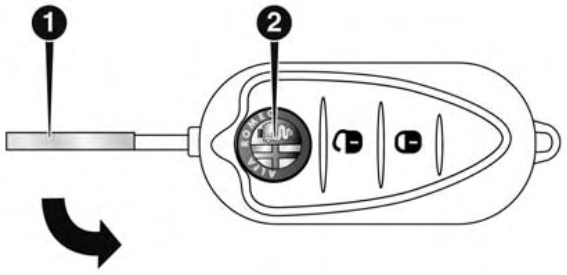

Key Fob

1 — Vehicle Key
2 — Push To Open/Close Vehicle Key

Ignition Key Removal

1. Push the brake pedal and place the transmission into first (1) or reverse (R) gear by selecting/pushing the buttons on the console.

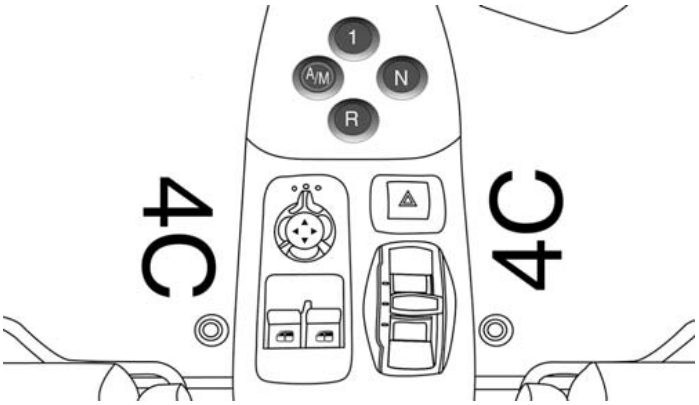

Transmission Gear Selector

2. Rotate the key to the STOP (OFF/LOCK) position and engage the handbrake and release brake pedal.

Downloaded from www.Manualslib.com manuals search engine

3. Remove the key from the ignition switch lock cylinder.

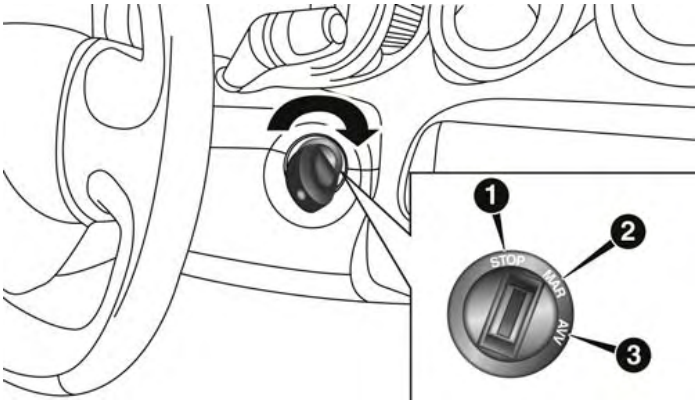

Ignition Switch Positions

1 — STOP (OFF/LOCK)
2 — MAR (ACC/ON/RUN)
3 — AVV (START)

WARNING!

- **Before exiting the vehicle, always apply the parking brake, and remove the Key Fob from the ignition. When leaving the vehicle, always lock your vehicle.**
- **Never leave children alone in a vehicle, or with access to an unlocked vehicle.**
- **Allowing children to be in a vehicle unattended is dangerous for a number of reasons. A child or others could be seriously or fatally injured. Children should be warned not to touch the parking brake, brake pedal or the transmission gear selector.**
- **Do not leave the Key Fob in or near the vehicle, or in a location accessible to children. A child could operate power windows, other controls, or move the vehicle.**

(Continued)

Downloaded from www.Manualslib.com manuals search engine

WARNING! *(Continued)*

- **Do not leave children or animals inside parked vehicles in hot weather. Interior heat build-up may cause serious injury or death.**

CAUTION!

An unlocked car is an invitation to thieves. Always remove the key from the ignition and lock all the doors when leaving the vehicle unattended.

Locking Doors With A Key

You can insert the key with either side up. To lock the door, turn the key to the left. To unlock the door, turn the key to the right. Refer to "Body Lubrication" in "Maintaining Your Vehicle" for maintenance information.

Key-In-Ignition Reminder

Opening the driver's door when the key is in the ignition and the ignition switch position is OFF/LOCK, sounds a signal to remove the key.

SENTRY KEY®

The Sentry Key® Immobilizer System prevents unauthorized vehicle operation by disabling the engine. The system does not need to be armed or activated. Operation is automatic, regardless of whether the vehicle is locked or unlocked.

The system uses ignition keys which have an embedded electronic chip (transponder) to prevent unauthorized vehicle operation. Therefore, only keys that are programmed to the vehicle can be used to start and operate the vehicle.

Downloaded from www.Manualslib.com manuals search engine

NOTE: A key which has not been programmed is also considered an invalid key, even if it is cut to fit the ignition switch lock cylinder for that vehicle.

If the Vehicle Security Light is on after the key is turned to the ON/RUN position, it indicates that there is a problem with the electronics.

CAUTION!

- **Always remove the Sentry Key® from the vehicle and lock all doors when leaving the vehicle unattended.**
- **The Sentry Key® Immobilizer system is not compatible with some aftermarket remote starting systems. Use of these systems may result in vehicle starting problems and loss of security protection.**

All of the keys provided with your new vehicle have been programmed to the vehicle electronics.

Replacement Keys

NOTE: Only keys that have been programmed to the vehicle electronics can be used to start the vehicle. Once a Sentry Key® has been programmed to a vehicle, it cannot be programmed to any other vehicle.

NOTE: When having the Sentry Key® Immobilizer System serviced, bring all vehicle keys with you to an authorized dealer.

General Information

The Sentry Key® system complies with FCC rules part 15 and with RSS-210 of Industry Canada. Operation is subject to the following conditions:

- This device may not cause harmful interference.
- This device must accept any interference that may be received, including interference that may cause undesired operation.

Downloaded from www.Manualslib.com manuals search engine

NOTE: Changes or modifications not expressly approved by the party responsible for compliance could void the user's authority to operate the equipment.

VEHICLE SECURITY ALARM SYSTEM — IF EQUIPPED

The Vehicle Security Alarm monitors the doors and decklid for unauthorized entry. It will also activate the siren and emit a visual flash of the turn signals (front and rear) for any of the following intrusion cases.

Operation

The alarm activates in the following cases:

1. Wrongful opening of one of the doors or the decklid (perimeter protection);
2. Cutting of the battery leads;
3. Movement inside the passenger compartment (volumetric protection);
4. Anomalous lifting/tilting of the vehicle.

Operation of the alarm is indicated by a visual signal (flashing of the direction indicators for several seconds). There is a maximum number of visual cycles. When this is reached the system returns to normal operation.

To Arm The System

With the doors and decklid closed and the ignition key either turned to STOP (OFF/LOCK) or removed, point the key towards the vehicle then push and release the lock button.

The system emits a visual signal and activates door locking.

A self-diagnosis stage lasting approximately 30 seconds precedes the activation of the alarm. During the self-diagnosis, the vehicle security light flashes in the instrument panel at a frequency of about one flash per second.

Downloaded from www.Manualslib.com manuals search engine

After the self-diagnosis stage, the vehicle security light flashes at a lower frequency (approximately one flash every three seconds).

If, after the alarm is switched on, a second visual signal emit via the vehicle security light in the instrument panel, wait about four seconds and switch off the alarm by pushing the lock button, check that the doors and decklid are closed correctly and then reactivate the system by pushing the unlock button.

If the alarm emits a visual signal even when the doors and decklid are closed correctly, a system malfunction has occurred: in this case, contact a authorized vehicle Dealership.

To Disarm The System

Deactivation

Push the unlock button.

The following operations are performed:

- Two brief flashes of the direction indicators.
- Unlocking of the doors.

NOTE:

- If the central door locking system is released using the metal insert of the key, the alarm is not disabled.
- In the event of accidental activation of the alarm, or in any case to interrupt the visual signal cycle when activated, it is possible to push the unlock button or turn the ignition key to MAR (ON/RUN) for at least five seconds, after which the system will deactivate.

Disarming

To completely disable the alarm (e.g. during a lengthy period of vehicle inactivity), lock the vehicle by turning the metal insert of the key in the door lock.

Downloaded from www.Manualslib.com manuals search engine

NOTE: If the batteries of the key fob run out or there is a fault in the system, the alarm can be switched off by inserting the key in the ignition switch and turning it to MAR (ON/RUN).

ILLUMINATED ENTRY

The interior lights will turn on whenever a door is opened and the dimmer switch is not in the defeat position.

The interior lights will turn on, remain on for approximately 30 seconds, and then fade to off if a door is opened using the outside door handle and then closed or a door is unlocked using the vehicles key.

The interior lights will turn on and remain on for about four seconds and then fade to off if a door is opened using the inside door handle.

NOTE: None of the courtesy lights will operate if the dimmer control is in the "defeat" position (extreme downward position), unless the overhead map/reading lights are turned on manually.

REMOTE KEYLESS ENTRY (RKE) — IF EQUIPPED

This system allows you to lock or unlock the doors and decklid from distances up to approximately 66 ft (20 m) using a hand-held Remote Keyless Entry (RKE) transmitter. The RKE transmitter does not need to be pointed at the vehicle to activate the system.

Downloaded from www.Manualslib.com manuals search engine

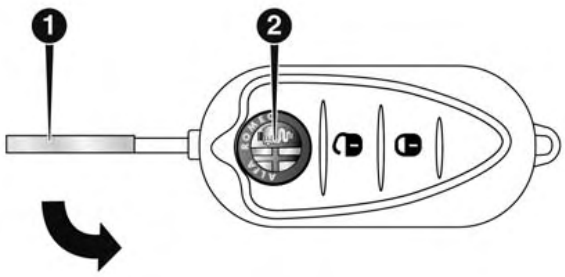

Key Fob

1 — Vehicle Key
2 — Push To Open/Close Vehicle Key

NOTE: The line of transmission must not be blocked with metal objects.

To Unlock The Doors

Push and release the UNLOCK button on the RKE transmitter to unlock the doors. The park lights and turn signal lights will flash to acknowledge the signal and the illuminated entry system will turn on.

NOTE: The Door Unlock Indicator will illuminate in the instrument panel when one or both doors are unlocked.

To Lock The Doors

Push and release the LOCK button on the RKE transmitter: locking of doors, switching off of internal roof light and single flashing of direction indicators.

If one or more door are open, the doors will not be locked. This is indicated by a rapid flashing of the direction indicators. The doors will be locked if the decklid is open however.

When a speed of more than 12 mph (20 km/h) is reached, the doors will be locked automatically if the Autoclose

Downloaded from www.Manualslib.com manuals search engine

function was selected. Refer to "Electronic Vehicle Information Center (EVIC)" in "Understanding Your Instrument Panel" for further information.

When the doors are locked from outside the car (using the remote control), the door lock indicator will illuminate for a few seconds and then start flashing (deterrent function).

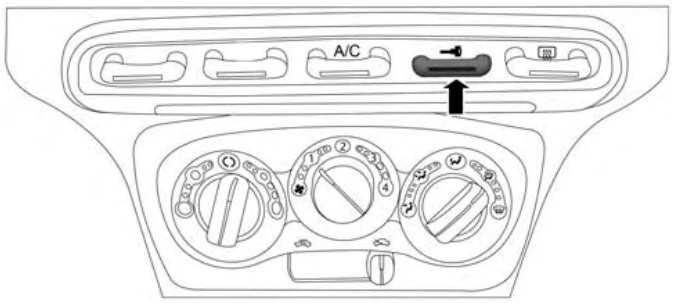

Door LED Lock Indicator

Transmitter Battery Replacement

NOTE: Perchlorate Material – special handling may apply. See www.dtsc.ca.gov/hazardouswaste/perchlorate

The recommended replacement battery is CR2032.

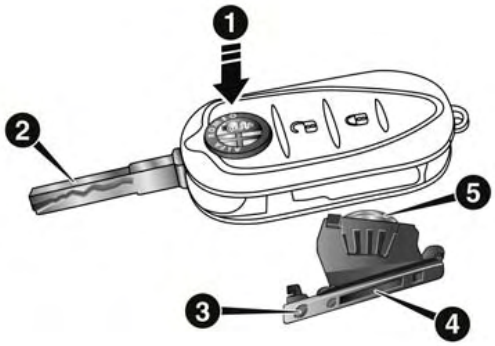

Battery Replacement Procedure

Downloaded from www.Manualslib.com manuals search engine

Replace the Key Fob battery with the following procedure:

1. Push button #1 and move the metal insert #2 to opening position;
2. Turn screw #3 to unlock using a fine bit screwdriver;
3. Remove battery compartment #4;
4. Replace battery #5, respecting the polarity;
5. Reinsert compartment #4 in the key and secure it by turning screw #3 to lock.

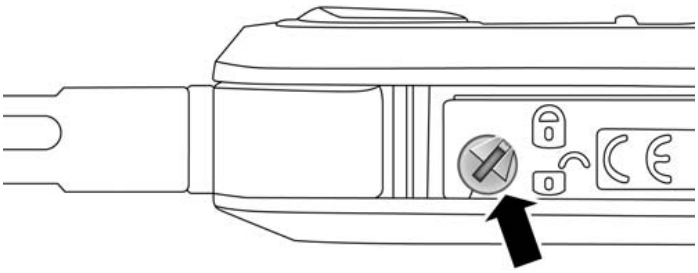

Key Fob Screw Location

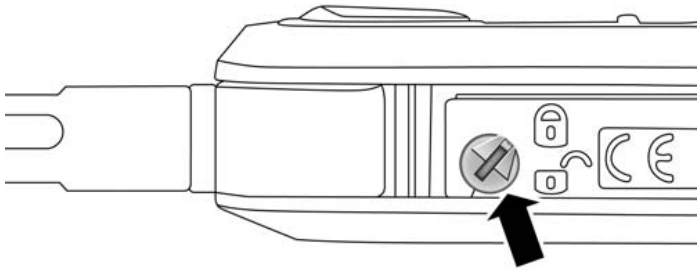

Key Fob Screw Location

Downloaded from www.Manualslib.com manuals search engine

General Information

This device complies with Part 15 of the FCC rules and RSS 210 of Industry Canada. Operation is subject to the following conditions:

- This device may not cause harmful interference.
- This device must accept any interference received, including interference that may cause undesired operation.

NOTE: Changes or modifications not expressly approved by the party responsible for compliance could void the user's authority to operate the equipment.

If your RKE transmitter fails to operate from a normal distance, check for these two conditions:

1. A weak battery in the transmitter. The expected life of the battery is a minimum of three years.
2. Closeness to a radio transmitter such as a radio station tower, airport transmitter, and some mobile or CB radios.

DOOR LOCKS

Central Door Locking/Unlocking

Locking Doors From The Outside

With the doors closed, push the lock button on the key fob or turn the metal insert (located inside the key fob) in the door lock.

The Door Lock LED Indicator button will illuminate to indicate that the doors have locked.

Downloaded from www.Manualslib.com manuals search engine

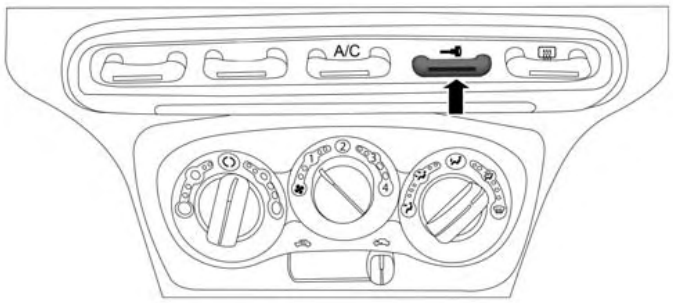

Door Lock LED Indicator

NOTE: Door locking is carried out with all doors shut.

Unlocking Doors From The Outside

Push the unlock button on the key or turn the metal insert (located inside the key) in the driver side door lock.

WARNING!

- **For personal security and safety in the event of a collision, lock the vehicle doors before you drive as well as when you park and leave the vehicle.**
- **Never leave children alone in a vehicle, or with access to an unlocked vehicle. Allowing children to be in a vehicle unattended is dangerous for a number of reasons. A child or others could be seriously or fatally injured. Children should be warned not to touch the parking brake, brake pedal or the transmission gear selector.**
- **Do not leave the Key Fob in or near the vehicle, or in a location accessible to children. A child could operate power windows, other controls, or move the vehicle.**

Downloaded from www.Manualslib.com manuals search engine

Locking/Unlocking Doors From The Inside

Push the Lock LED Indicator button . The button has an LED that indicates whether the doors are locked or unlocked.

Pushing the Lock LED Indicator button again centrally unlocks all doors and switches off the LED.

Pushing the Lock LED Indicator button again centrally locks all the doors. The doors will be locked only if all the doors are properly shut.

Once the doors have been locked using the remote control or the key, it will no longer be possible to unlock them by pushing the Lock LED Indicator button .

NOTE: In the absence of electrical power supply (blown fuse, battery disconnected, etc.) it is still possible to lock the doors manually.

Emergency Door Locking Device

Passenger Side Door

The passenger side door has a device to lock it when there is no current.

To lock it, place the metal insert of the ignition key in housing #1 and turn it clockwise.

Downloaded from www.Manualslib.com manuals search engine

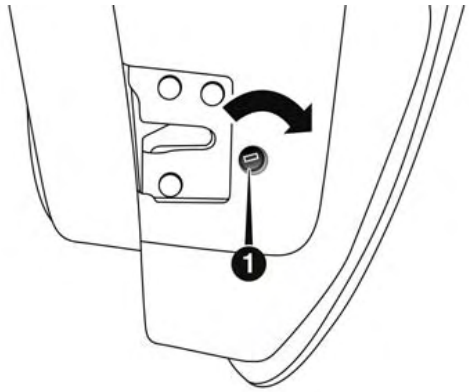

Emergency Door Lock Function

To restore the starting condition of the door locks (only if battery charge restored), proceed as follows:

- Push the Unlock button on the remote control;
- Push the door locking/unlocking LED indicator button on the dashboard; or
- Introduce the metal insert of the ignition key in the front door pawl; or
- Pull the internal door handle.

Door Opening/Closing Mechanism Reset

If the battery is disconnected or the protection fuse blows, the door opening/closing mechanism must be reset as follows:

1. Close all the doors.
2. Push the unlock button on the key or the door locking/unlocking LED indicator button on the dashboard.
3. Push the lock button on the key or the door locking/unlocking LED indicator button on the dashboard.

Downloaded from www.Manualslib.com manuals search engine

WINDOWS

Power Windows

NOTE:

- These operate when the ignition key is turned to MAR-ON and for about three minutes after the ignition key is turned to STOP or removed unless one of the doors is opened.
- The buttons are located on the center console.

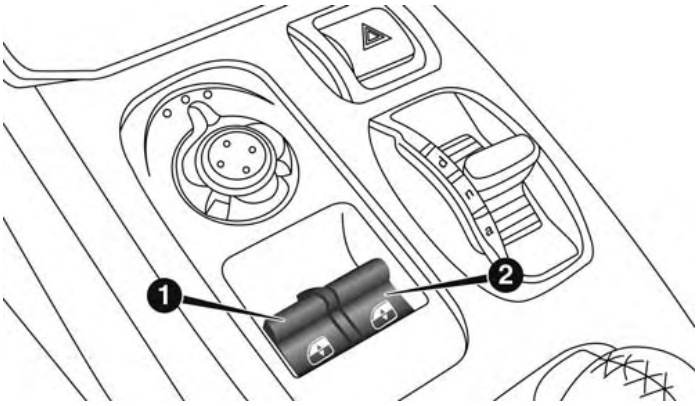

Power Window Switch

1 — Driver Power Window Switch
2 — Passenger Power Window Switch

Push the corresponding buttons to open/close the desired window.

Downloaded from www.Manualslib.com manuals search engine

When one of the two buttons is pushed briefly, the window moves in stages; if the button is held down to open, "continuous automatic" operation is activated.

If the button is pushed again the window will stop in its current position. If the button is pushed for several seconds, the window lowers automatically (only with ignition key in MAR-ON position).

Continuous Automatic Operation

This is activated by pushing one of the two buttons for longer than half a second. The window will stop when it is fully opened, or when the button is pushed again.

It can be used on both the driver side and passenger side, only for lowering the window.

Electric Window System Reset

After a break in power supply for the control units (battery replaced or disconnected or protective fuses for the electric window control units replaced), the automatic operation of the windows must be restored.

The restoration procedure must be performed as described below with the doors closed:

1. Completely open the driver's door window keeping the operating button pushed for at least three seconds after the (lower) end of travel position is reached.
2. Completely raise the driver side window and hold the button down for at least three seconds once the (upper) end of travel position has been reached.
3. Proceed in the same way as described in points 1 and 2 for the passenger side door.
4. Make sure that the reset is correct by checking that the windows work automatically.

Downloaded from www.Manualslib.com manuals search engine

WARNING!

Improper actuation of the power windows may be dangerous. Never leave children unattended in a vehicle, and do not let children play with power windows. Before and during window operation make sure no one and no object (including clothing) is in the path of the moving glass or its mechanism. Do not leave the key fob in or near the vehicle, or in a location accessible to children. Occupants, particularly unattended children, can become entrapped by the windows while operating the power window switches. Such entrapment may result in serious injury or death.

DECKLID

NOTE: During normal car operation, the luggage compartment can reach temperatures above 149º F (65° C). Pay attention when transporting objects that may be damaged at such temperatures. Do not keep aerosol cans in the car: danger of explosion. Aerosol cans must not be exposed to temperatures above 122º F (50° C).

Opening Procedure

With driver side door open, pull lever #1 located at the point illustrated in the figure.

Downloaded from www.Manualslib.com manuals search engine

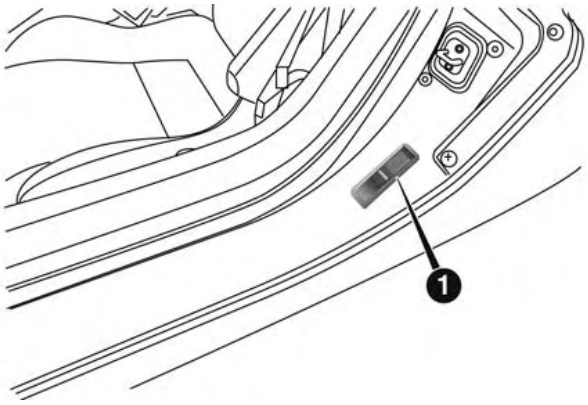

Decklid Release Lever Location

1 — Decklid Release Lever

Raise the decklid and release supporting rod from its locking device.

Insert the end of the rod in housing, making sure that the rod engages in the smallest hole of the retaining clip. Care must be taken to keep the decklid raised until the rod is fixed in the correct position.

NOTE: Maintain a tight grip on the decklid when raising, in order to prevent any external occurrence (e.g. a gust of wind) from suddenly opening the decklid to end of travel. Additionally, in order to prevent any damage to the car or broken windows, do not force the decklid beyond the opening position necessary to secure the supporting rod in the hole of the retaining clip.

Closing Procedure

1. Hold the decklid up with one hand and use the other to remove rod from housing and reinsert it in its locking device.

Downloaded from www.Manualslib.com manuals search engine

2. Lower the decklid approximately 7.8 inches (20 cm) from the engine compartment and let it drop. Make sure that the decklid is completely closed and not only fastened in safety position by trying to open it. If it is not completely closed, do not push the decklid down, but raise it and repeat the procedure.

NOTE: Always check that the decklid is closed correctly to prevent it from opening while the car is travelling.

WARNING!

- **The maximum permitted load in the luggage compartment, in addition to the kits provided, is 33.1 lbs. (15 kg). Do not exceed the maximum permitted load in the luggage compartment.**

(Continued)

WARNING! ***(Continued)***

- **When accessing the rear luggage compartment, do not come into contact with engine, or other components, that may be hot and could burn you if touched.**
- **Access the luggage compartment only with the vehicle stationary. Before exiting a vehicle, you should always shift the vehicle into gear, remove the key fob from the ignition, and apply the parking brake to secure the vehicle against unwanted movement.**
- **The decklid may drop suddenly, causing serious injury, if the supporting rod is not positioned correctly.**
- **The decklid must always be closed properly, and the lock engaged, while the car is in motion.**

Downloaded from www.Manualslib.com manuals search engine

OCCUPANT RESTRAINT SYSTEMS

Some of the most important safety features in your vehicle are the restraint systems:

- Seat Belt Systems
- Supplemental Restraint Systems (SRS) Air Bags
- Child Restraints

Important Safety Precautions:

Please pay close attention to the information in this section. It tells you how to use your restraint system properly, to keep you and your passenger as safe as possible.

Here are some simple steps you can take to minimize the risk of harm from a deploying air bag:

1. Children 12 years old and under should always ride buckled up in a vehicle with a rear seat.
2. If a child from 2 to 12 years old (not in a rear-facing child restraint) must ride in the front passenger seat, move the seat as far back as possible and use the proper child restraint. (Refer to "Child Restraints").
3. Children that are not big enough to wear the vehicle seat belt properly (Refer to "Child Restraints") should be secured in a vehicle with a rear seat in child restraints or belt-positioning booster seats. Older children who do not use child restraints or belt-positioning booster seats should ride properly buckled up in a vehicle with a rear seat.
4. Never allow children to slide the shoulder belt behind them or under their arm.
5. You should read the instructions provided with your child restraint to make sure that you are using it properly.

Downloaded from www.Manualslib.com manuals search engine

6. All occupants should always wear their lap and shoulder belts properly.
7. The driver and front passenger seats should be moved back as far as practical to allow the Advanced Front Air Bags room to inflate.
8. Do not lean against the door or window. If your vehicle has side air bags, and deployment occurs, the side air bags will inflate forcefully into the space between you and the door and you could be injured.
9. If the air bag system in this vehicle needs to be modified to accommodate a disabled person, contact the Customer Center. Phone numbers are provided under "If You Need Assistance."

WARNING!

- **Never place a rear-facing child restraint in front of an air bag. A deploying Passenger Advanced Front Air Bag can cause death or serious injury to a child 12 years or younger, including a child in a rear-facing child restraint.**
- **Only use rear-facing child restraint in a vehicle with a rear seat.**

Seat Belt Systems

Buckle up even though you are an excellent driver, even on short trips. Someone on the road may be a poor driver and could cause a collision that includes you. This can happen far away from home or on your own street.

Research has shown that seat belts save lives, and they can reduce the seriousness of injuries in a collision. Some of the worst injuries happen when people are thrown from the vehicle. Seat belts reduce the possibility of

Downloaded from www.Manualslib.com manuals search engine

ejection and the risk of injury caused by striking the inside of the vehicle. Everyone in a motor vehicle should be belted at all times.

Enhanced Seat Belt Use Reminder System (BeltAlert)

The Belt Alert feature is active whenever the ignition switch is in the START or ON/RUN position. In this condition if the driver is unbelted, a continuous chime signal will start for few seconds and the Seat Belt Reminder Light will turn on until the driver seat belt is buckled.

If the driver seat belt is unbuckled once the vehicle speed is over 12.5 mph (20 km/h) or when travelling at a speed from 6 to 12.5 mph (10 to 20 km/h) for few seconds, the BeltAlert® warning sequence begins by blinking the Seat Belt Reminder Light and sounding an intermittent chime. Once the sequence starts, it will continue for the entire duration or until the driver's seat belt is buckled. After the sequence completes, the Seat Belt Reminder Light remains illuminated until the driver's seat belt is buckled. The driver should instruct all other occupants to buckle their seat belts.

It is recommended that pets be restrained in the rear seat (if equipped) in pet harnesses or pet carriers that are secured by seat belts, and cargo is properly stowed.

BeltAlert can be activated or deactivated by your authorized dealer. Chrysler Group LLC does not recommend deactivating BeltAlert.

NOTE: If BeltAlert has been deactivated, the Seat Belt Reminder Light will continue to illuminate while the driver's seat belt remains unbuckled and a continuous chime will sound when the ignition switch is first placed in the START or ON/RUN position.

Downloaded from www.Manualslib.com manuals search engine

Lap/Shoulder Belts

All seating positions in your vehicle are equipped with lap/shoulder belts.

The seat belt webbing retractor will lock only during very sudden stops or collisions. This feature allows the shoulder part of the seat belt to move freely with you under normal conditions. However, in a collision the seat belt will lock and reduce your risk of striking the inside of the vehicle or being thrown out of the vehicle.

This seat belt system has a retractor assembly that is designed to release webbing in a controlled manner. This feature is designed to help reduce the seat belt force acting on the occupant's chest.

WARNING!

- **Relying on the air bags alone could lead to more severe injuries in a collision. The air bags work with your seat belt to restrain you properly. In some collisions, the air bags won't deploy at all. Always wear your seat belt even though you have air bags.**
- **In a collision, you and your passengers can suffer much greater injuries if you are not properly buckled up. You can strike the interior of your vehicle or other passengers, or you can be thrown out of the vehicle. Always be sure you and others in your vehicle are buckled up properly.**
- **It is dangerous to ride in a cargo area, inside or outside of a vehicle. In a collision, people riding in these areas are more likely to be seriously injured or killed.**

(Continued)

Downloaded from www.Manualslib.com manuals search engine

WARNING! *(Continued)*

- **Do not allow people to ride in any area of your vehicle that is not equipped with seats and seat belts.**
- **Be sure everyone in your vehicle is in a seat and using a seat belt properly.**
- **Wearing your seat belt incorrectly could make your injuries in a collision much worse. You might suffer internal injuries, or you could even slide out of the seat belt. Follow these instructions to wear your seat belt safely and to keep your passengers safe, too.**
- **Two people should never be belted into a single seat belt. People belted together can crash into one another in a collision, hurting one another badly. Never use a lap/shoulder belt or a lap belt for more than one person, no matter what their size.**

(Continued)

WARNING! *(Continued)*

- **A lap belt worn too high can increase the risk of injury in a collision. The seat belt forces won't be at the strong hip and pelvic bones, but across your abdomen. Always wear the lap part of your seat belt as low as possible and keep it snug.**
- **A twisted seat belt may not protect you properly. In a collision, it could even cut into you. Be sure the seat belt is flat against your body, without twists. If you can't straighten a seat belt in your vehicle, take it to your authorized dealer immediately and have it fixed.**
- **A seat belt that is buckled into the wrong buckle will not protect you properly. The lap portion could ride too high on your body, possibly causing internal injuries. Always buckle your seat belt into the buckle nearest you.**

(Continued)

Downloaded from www.Manualslib.com manuals search engine

WARNING! ***(Continued)***

- **A seat belt that is too loose will not protect you properly. In a sudden stop, you could move too far forward, increasing the possibility of injury. Wear your seat belt snugly.**
- **A seat belt that is worn under your arm is dangerous. Your body could strike the inside surfaces of the vehicle in a collision, increasing head and neck injury. A seat belt worn under the arm can cause internal injuries. Ribs aren't as strong as shoulder bones. Wear the seat belt over your shoulder so that your strongest bones will take the force in a collision.**
- **A shoulder belt placed behind you will not protect you from injury during a collision. You are more likely to hit your head in a collision if you do not wear your shoulder belt. The lap and shoulder belt are meant to be used together.**

(Continued)

WARNING! ***(Continued)***

- **A frayed or torn seat belt could rip apart in a collision and leave you with no protection. Inspect the seat belt system periodically, checking for cuts, frays, or loose parts. Damaged parts must be replaced immediately. Do not disassemble or modify the seat belt system. Seat belt assemblies must be replaced after a collision.**

Lap/Shoulder Belt Operating Instructions

1. Enter the vehicle and close the door. Sit back and adjust the seat.

Downloaded from www.Manualslib.com manuals search engine

2. The seat belt latch plate is above the back of the front seat, and next to your arm in the rear seat (for vehicles equipped with a rear seat). Grasp the latch plate and pull out the seat belt. Slide the latch plate up the webbing as far as necessary to allow the seat belt to go around your lap.

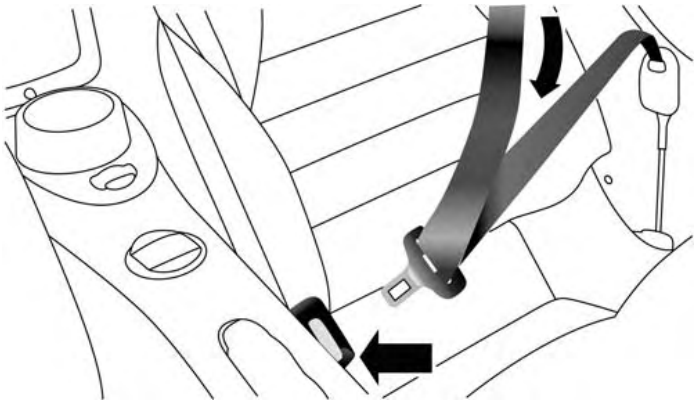

Pulling Out The Latch Plate

3. When the seat belt is long enough to fit, insert the latch plate into the buckle until you hear a "click."

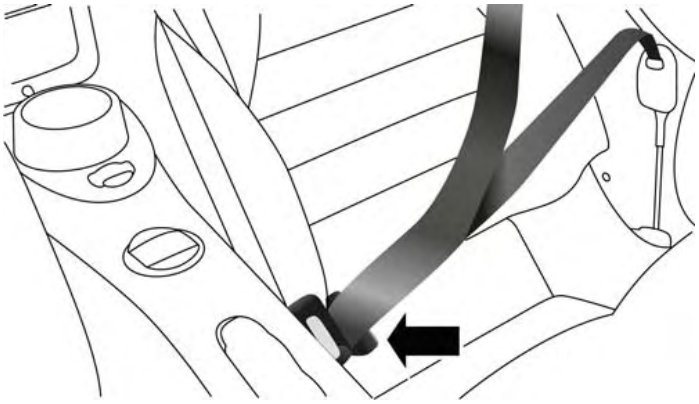

Inserting Latch Plate Into Buckle

Downloaded from www.Manualslib.com manuals search engine

4. Position the lap seat belt so that it is snug and lies low across your hips, below your abdomen. To remove slack in the lap belt portion, pull up on the shoulder belt. To loosen the lap belt if it is too tight, tilt the latch plate and pull on the lap belt. A snug seat belt reduces the risk of sliding under the seat belt in a collision.

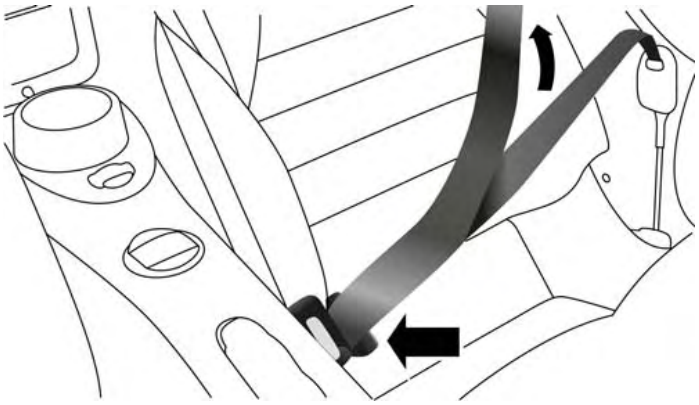

Positioning The Lap Belt

5. Position the shoulder belt across the shoulder and chest with minimal, if any slack so that it is comfortable and not resting on your neck. The retractor will withdraw any slack in the shoulder belt.

6. To release the seat belt, push the red button on the buckle. The seat belt will automatically retract to its stowed position. If necessary, slide the latch plate down the webbing to allow the seat belt to retract fully.

Lap/Shoulder Belt Untwisting Procedure

Use the following procedure to untwist a twisted lap/shoulder belt.

1. Position the latch plate as close as possible to the anchor point.

Downloaded from www.Manualslib.com manuals search engine

2. At about 6 to 12 in (15 to 30 cm) above the latch plate, grasp and twist the seat belt webbing 180 degrees to create a fold that begins immediately above the latch plate.
3. Slide the latch plate upward over the folded webbing. The folded webbing must enter the slot at the top of the latch plate.
4. Continue to slide the latch plate up until it clears the folded webbing and the seat belt is no longer twisted.

Seat Belts And Pregnant Women

We recommend that pregnant women use the seat belts throughout their pregnancy. Keeping the mother safe is the best way to keep the baby safe.

Pregnant women should wear the lap portion of the seat belt across the thighs and as snug across the hips as possible. Keep the seat belt low so that it does not come across the abdomen. That way the strong bones of the hips will take the force if there is a collision.

Seat Belt Pretensioner

The front seat belt system is equipped with pretensioning devices that are designed to remove slack from the seat belt in the event of a collision. These devices may improve the performance of the seat belt by removing slack from the seat belt early in a collision. Pretensioners work for all size occupants, including those in child restraints.

NOTE: These devices are not a substitute for proper seat belt placement by the occupant. The seat belt still must be worn snugly and positioned properly.

The pretensioners are triggered by the Occupant Restraint Controller (ORC). Like the air bags, the pretensioners are single use items. A deployed pretensioner or a deployed air bag must be replaced immediately.

Downloaded from www.Manualslib.com manuals search engine

Energy Management Feature

This vehicle has a seat belt system with an Energy Management feature in the front seating positions that may help further reduce the risk of injury in the event of a collision. This seat belt system has a retractor assembly that is designed to release webbing in a controlled manner.

Automatic Locking Retractor Mode (ALR)

The seat belt in the passenger seating position is equipped with a switchable Automatic Locking Retractor (ALR) which is used to secure a child restraint system. For additional information, refer to "Child Restraints" in "Things To Know Before Starting Your Vehicle." The image below defines the type of feature for each seating position.

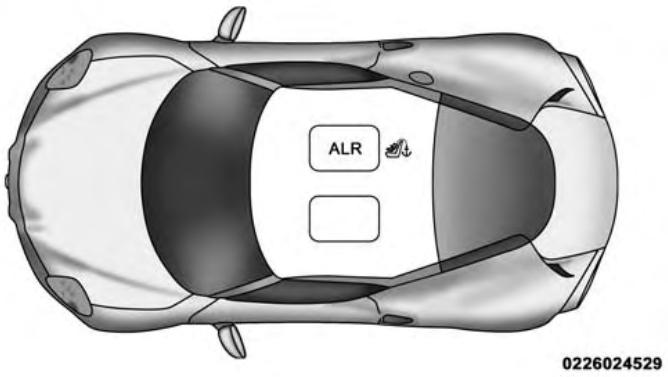

- ALR = Switchable Automatic Locking Retractor
- Top Tether Anchorage Symbol

Downloaded from www.Manualslib.com manuals search engine

If the passenger seating position is equipped with an ALR and is being used for normal usage:

Only pull the seat belt webbing out far enough to comfortably wrap around the occupant's mid-section so as to not activate the ALR. If the ALR is activated, you will hear a clicking sound as the seat belt retracts.

Allow the webbing to retract completely in this case and then carefully pull out only the amount of webbing necessary to comfortably wrap around the occupant's mid-section. Slide the latch plate into the buckle until you hear a "click."

In Automatic Locking Mode, the shoulder belt is automatically prelocked. The seat belt will still retract to remove any slack in the shoulder belt. The Automatic Locking Mode is available on all passenger-seating positions with a combination lap/shoulder belt.

Use the Automatic Locking Mode anytime a child restraint is installed in a seating position that has a seat belt with this feature. Children 12 years old and under should always be properly restrained in a vehicle with a rear seat.

WARNING!

- **Never place a rear-facing child restraint in front of an air bag. A deploying Passenger Advanced Front Air Bag can cause death or serious injury to a child 12 years or younger, including a child in a rear-facing child restraint.**
- **Only use rear-facing child restraint in a vehicle with a rear seat.**

How To Engage The Automatic Locking Mode

1. Buckle the combination lap and shoulder belt.
2. Grasp the shoulder portion and pull downward until the entire seat belt is extracted.

Downloaded from www.Manualslib.com manuals search engine

3. Allow the seat belt to retract. As the seat belt retracts, you will hear a clicking sound. This indicates the seat belt is now in the Automatic Locking Mode.

How To Disengage The Automatic Locking Mode

Unbuckle the combination lap/shoulder belt and allow it to retract completely to disengage the Automatic Locking Mode and activate the vehicle sensitive (emergency) locking mode.

WARNING!

- **The seat belt assembly must be replaced if the switchable Automatic Locking Retractor (ALR) feature or any other seat belt function is not working properly when checked according to the procedures in the Service Manual.**

(Continued)

WARNING! ***(Continued)***

- **Failure to replace the seat belt assembly could increase the risk of injury in collisions.**
- **Do not use the Automatic Locking Mode to restrain occupants who are wearing the seat belt or children who are using booster seats. The locked mode is only used to install rear-facing or forward-facing child restraints that have a harness for restraining the child.**

Supplemental Restraint System (SRS)

Air Bag System Components

Your vehicle may be equipped with the following air bag system components:

- Occupant Restraint Controller (ORC)
- Air Bag Warning Light

Downloaded from www.Manualslib.com manuals search engine

- Steering Wheel and Column
- Instrument Panel
- Knee Impact Bolsters
- Advanced Front Air Bags
- Supplemental Side Air Bags
- Supplemental Driver Knee Air Bag
- Front and Side Impact Sensors
- Front Seat Belt Pretensioners, Seat Belt Buckle Switch, and Seat Track Position Sensors

Advanced Front Air Bags

This vehicle has Advanced Front Air Bags for both the driver and front passenger as a supplement to the seat belt restraint systems. The driver's Advanced Front Air Bag is mounted in the center of the steering wheel. The passenger's Advanced Front Air Bag is mounted in the instrument panel. The words AIRBAG are embossed on the air bag covers.

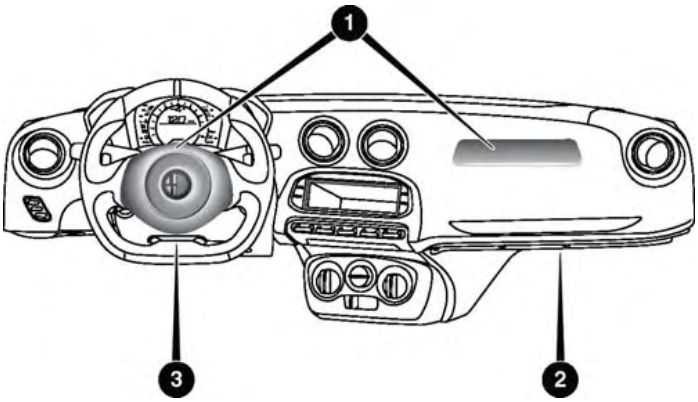

Advanced Front Air Bag Locations

1 — Driver And Passenger Advanced Front Air Bags
2 — Passenger Knee Bolsters
3 — Supplemental Driver Knee Air Bag/Driver Knee Bolster

Downloaded from www.Manualslib.com manuals search engine

WARNING!

- **Being too close to the steering wheel or instrument panel during Advanced Front Air Bag deployment could cause serious injury, including death. Air bags need room to inflate. Sit back, comfortably extending your arms to reach the steering wheel or instrument panel.**
- **Never place a rear-facing child restraint in front of an air bag. A deploying Passenger Advanced Front Air Bag can cause death or serious injury to a child 12 years or younger, including a child in a rear-facing child restraint.**
- **Only use a rear-facing child restraint in a vehicle with a rear seat.**

Advanced Front Air Bag Features

The Advanced Front Air Bag system has multistage driver and front passenger air bags. This system provides output appropriate to the severity and type of collision as determined by the Occupant Restraint Controller (ORC), which may receive information from the front impact sensors or other system components.

The first stage inflator is triggered immediately during an impact that requires air bag deployment. A low energy output is used in less severe collisions. A higher energy output is used for more severe collisions.

This vehicle may be equipped with driver and/or front passenger seat track position sensors that may adjust the inflation rate of the Advanced Front Air Bags based upon seat position.

This vehicle may be equipped with a driver and/or front passenger seat belt buckle switch that detects whether the driver or front passenger seat belt is fastened. The seat belt buckle switch may adjust the inflation rate of the Advanced Front Air Bags.

Downloaded from www.Manualslib.com manuals search engine

WARNING!

- **No objects should be placed over or near the air bag on the instrument panel, because any such objects could cause harm if the vehicle is in a collision severe enough to cause the air bag to inflate.**
- **Do not put anything on or around the air bag covers or attempt to open them manually. You may damage the air bags and you could be injured because the air bags may no longer be functional. The protective covers for the air bag cushions are designed to open only when the air bags are inflating.**
- **Relying on the air bags alone could lead to more severe injuries in a collision. The air bags work with your seat belt to restrain you properly. In**

(Continued)

WARNING! ***(Continued)***

some collisions, air bags won't deploy at all. Always wear your seat belts even though you have air bags.

Advanced Front Air Bag Operation

Advanced Front Air Bags are designed to provide additional protection by supplementing the seat belts. Advanced Front Air Bags are not expected to reduce the risk of injury in rear, side, or rollover collisions. The Advanced Front Air Bags will not deploy in all frontal collisions, including some that may produce substantial vehicle damage — for example, some pole collisions, truck underrides, and angle offset collisions.

On the other hand, depending on the type and location of impact, Advanced Front Air Bags may deploy in crashes with little vehicle front-end damage but that produce a

Downloaded from www.Manualslib.com manuals search engine

severe initial deceleration. Because air bag sensors measure vehicle deceleration over time, vehicle speed and damage by themselves are not good indicators of whether or not an air bag should have deployed.

Seat belts are necessary for your protection in all collisions, and also are needed to help keep you in position, away from an inflating air bag.

When the ORC detects a collision requiring the Advanced Front Air Bags, it signals the inflator units. A large quantity of non-toxic gas is generated to inflate the Advanced Front Air Bags.

The steering wheel hub trim cover and the upper right side of the instrument panel separate and fold out of the way as the air bags inflate to their full size. The Advanced Front Air Bags fully inflate in less time than it takes to blink your eyes. The air bags then quickly deflate while helping to restrain the driver and front passenger.

Supplemental Door-Integrated Side Air Bag Inflatable Curtains (SABICs)

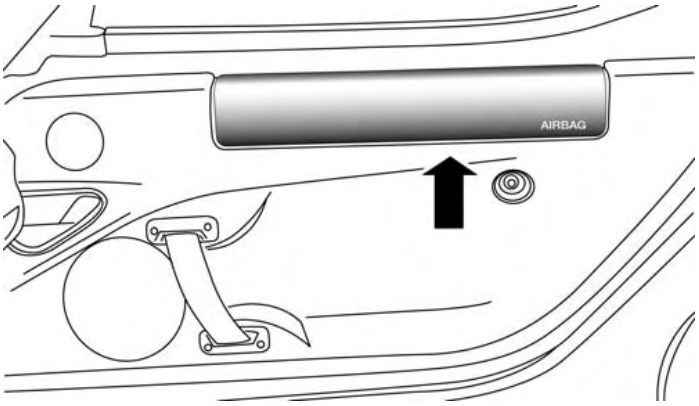

Supplemental Door-Integrated Side Air Bag Inflatable Curtains (SABICs)

This vehicle is equipped with Supplemental Door-Integrated Side Air Bag Inflatable Curtains (SABICs).

Downloaded from www.Manualslib.com manuals search engine

SABICs may help reduce the risk of head injury to front seat outboard occupants in certain side impacts. SABICs may reduce the risk of injuries in certain side impacts, in addition to the injury reduction potential provided by the seat belts and body structure. The SABICs are located in the door trim below the side windows. The trim covering the SABICs is labeled AIRBAG.

The SABICs may help reduce the risk of partial or complete ejection of vehicle occupants through side windows in certain side impact events.

The SABICs deploy upward, covering the side windows. An inflating SABIC pushes the outside edge of the trim out of the way and covers the window. The SABICs inflate with enough force to injure you if you are not belted and seated properly, or if items are positioned in the area where the SABICs inflate. Children are at an even greater risk of injury from a deploying air bag.

SABICs are designed to activate in certain side impacts. The Occupant Restraint Controller ("ORC") determines whether the deployment of the SABIC in a particular impact event is appropriate, based on the severity and type of collision. The side impact sensors aid the ORC in determining the appropriate response to impact events. The system is calibrated to deploy the SABIC on the impact side of the vehicle during impacts that require SABIC occupant protection. In side impacts, the SABICs deploy independently; a left side impact deploys the left side SABIC only and a right-side impact deploys the right side SABIC only. Vehicle damage by itself is not a good indicator of whether or not SABICs should have deployed.

SABICs will not deploy in all side collisions, including some collisions at certain angles, or some side collisions that do not impact the area of the passenger compartment. SABICs may deploy during angled or offset frontal collisions where the Advanced Front Air Bags deploy.

Downloaded from www.Manualslib.com manuals search engine

SABICs are a supplement to the seat belt restraint system. SABICs deploy in less time than it takes to blink your eyes. Occupants, including children, who are up against or very close to SABICs can be seriously injured or killed. Occupants, including children, should never lean on or sleep against the door, side windows, or area where the side air bags inflate, even if they are in an infant or child restraint.

Seat belts (and child restraints where appropriate) are necessary for your protection in all collisions. They also help keep you in position, away from an inflating SABIC. To get the best protection from the SABICs, occupants must wear their seat belts properly and sit upright with their backs against the seats. Children must be properly restrained in a child restraint or booster seat that is appropriate for the size of the child.

WARNING!

- **Your vehicle is equipped with left and right Supplemental Door-Integrated Side Air Bag Inflatable Curtains (SABICs). Do not stack luggage or other cargo up high enough to block the deployment of the SABICs. The door trim below the side windows where the SABIC and its deployment path are located, should remain free from any obstructions.**
- **SABICs need room to inflate. Do not lean against the door or window. Sit upright in the center of the seat.**
- **Being too close to the SABICs during deployment could cause you to be severely injured or killed.**

(Continued)

Downloaded from www.Manualslib.com manuals search engine

WARNING! ***(Continued)***

- **Relying on the SABICs alone could lead to more severe injuries in a collision. The SABICs work with your seat belt to restrain you properly. In some collisions, SABICs won't deploy at all. Always wear your seat belt even though you have SABICs.**

NOTE: Air bag covers may not be obvious to you, but they will open during air bag deployment.

Supplemental Driver Knee Air Bag

This vehicle is equipped with a Supplemental Driver Knee Air Bag mounted in the instrument panel below the steering column. The Supplemental Driver Knee Air Bag provides enhanced protection during a frontal impact by working together with the seat belts, pretensioners, and Advanced Front Air Bags.

Knee Impact Bolsters

The Knee Impact Bolsters help protect the knees of the driver and front passenger, and position the front occupants for improved interaction with the Advanced Front Air Bags.

WARNING!

- **Do not drill, cut, or tamper with the knee impact bolsters in any way.**
- **Do not mount any accessories to the knee impact bolsters such as alarm lights, stereos, citizen band radios, etc.**

If A Deployment Occurs

The Advanced Front Air Bags are designed to deflate immediately after deployment.

Downloaded from www.Manualslib.com manuals search engine

NOTE: Front and/or side air bags will not deploy in all collisions. This does not mean something is wrong with the air bag system.

If you do have a collision, which deploys the air bags, any or all of the following may occur:

- The air bag material may sometimes cause abrasions and/or skin reddening to the occupants as the air bags deploy and unfold. The abrasions are similar to friction rope burns or those you might get sliding along a carpet or gymnasium floor. They are not caused by contact with chemicals. They are not permanent and normally heal quickly. However, if you haven't healed significantly within a few days, or if you have any blistering, see your doctor immediately.
- As the air bags deflate, you may see some smoke-like particles. The particles are a normal by-product of the process that generates the non-toxic gas used for air bag inflation. These airborne particles may irritate the skin, eyes, nose, or throat. If you have skin or eye irritation, rinse the area with cool water. For nose or throat irritation, move to fresh air. If the irritation continues, see your doctor. If these particles settle on your clothing, follow the garment manufacturer's instructions for cleaning.

Do not drive your vehicle after the air bags have deployed. If you are involved in another collision, the air bags will not be in place to protect you.

WARNING!

Deployed air bags and seat belt pretensioners cannot protect you in another collision. Have the air bags, seat belt pretensioners, and the seat belt retractor assemblies replaced by an authorized dealer immediately. Also, have the Occupant Restraint Controller System serviced as well.

(Continued)

Downloaded from www.Manualslib.com manuals search engine

NOTE:

- Air bag covers may not be obvious in the interior trim, but they will open during air bag deployment.
- After any collision, the vehicle should be taken to an authorized dealer immediately.

Enhanced Accident Response System

In the event of an impact, if the communication network remains intact, and the power remains intact, depending on the nature of the event the ORC will determine whether to have the Enhanced Accident Response System perform the following functions:

- Cut off fuel to the engine.
- Flash hazard lights as long as the battery has power or until the ignition is cycled to OFF.
- Turn on the interior lights, which remain on as long as the battery has power or until the ignition is cycled to OFF.
- Unlock the doors automatically.

System Reset Procedure

Depending on the nature of the event the left and right turn signal lights, located in the instrument panel, may both be blinking and will continue to blink until the ignition switch is turned to the OFF position. In order to move your vehicle to the side of the road, you must follow the system reset procedure.

Downloaded from www.Manualslib.com manuals search engine

Customer Action	Customer Will See
1. Turn ignition OFF. (Turn Signal Switch Must be placed in Neutral State).	
2. Turn ignition ON.	Left Turn Light is OFF. Right Turn Light BLINKS.
3. Turn Right Turn Signal Switch ON.	Right Turn Light is ON SOLID. Left Turn Light BLINKS.
4. Turn Left Turn Signal Switch ON.	Left Turn Light is ON SOLID. Right Turn Light BLINKS.
5. Turn Right Turn Signal Switch ON.	Right Turn Light is ON SOLID. Left Turn Light BLINKS.
6. Turn Left Turn Signal Switch ON.	Left Turn Light is ON SOLID. Right Turn Light is ON SOLID.
7. Turn Left Turn Signal Switch OFF. (Turn Signal Switch Must be placed in Neutral State).	Left Turn Light is OFF. Right Turn Light is OFF.
8. Turn ignition OFF.	System is now reset and the engine may be started.
9. Turn Hazard Flashers OFF (Manually).	

If a reset procedure step is not completed within 45 seconds, then the turn signal lights will turn off and the reset procedure must be performed again in order to be successful.

Downloaded from www.Manualslib.com manuals search engine

Air Bag Warning Light

The air bags must be ready to inflate for your protection in a collision. The Air Bag Warning Light monitors the internal circuits and interconnecting wiring associated with air bag system electrical components.

The ORC monitors the readiness of the electronic parts of the air bag system whenever the ignition switch is in the START or ON/RUN position. If the ignition switch is in the OFF position the air bag system is not on and the air bags will not inflate.

The ORC contains a backup power supply system that may deploy the air bags even if the battery loses power or it becomes disconnected prior to deployment.

Also, the ORC turns on the Air Bag Warning Light in the instrument panel for approximately four to eight seconds for a self-check when the ignition is first turned to the ON/RUN position. After the self-check, the Air Bag Warning Light will turn off. If the ORC detects a malfunction in any part of the system, it turns on the Air Bag Warning Light, either momentarily or continuously. A single chime will sound to alert you if the light comes on again after initial startup.

The ORC also includes diagnostics that will illuminate the instrument cluster Air Bag Warning Light if a malfunction is detected that could affect the air bag system. The diagnostics also record the nature of the malfunction. While the air bag system is designed to be maintenance free, if any of the following occurs, have an authorized dealer service the air bag system immediately.

- The Air Bag Warning Light does not come on during the four to eight seconds when the ignition switch is first turned to the ON/RUN position.
- The Air Bag Warning Light remains on after the four to eight-second interval.

Downloaded from www.Manualslib.com manuals search engine

- The Air Bag Warning Light comes on intermittently or remains on while driving.

NOTE: If the speedometer, tachometer, or any engine related gauges are not working, the Occupant Restraint Controller (ORC) may also be disabled. In this condition the air bags may not be ready to inflate for your protection. Have an authorized dealer service the air bag system immediately.

WARNING!

Ignoring the Air Bag Warning Light in your instrument panel could mean you won't have the air bags to protect you in a collision. If the light does not come on as a bulb check when the ignition is first placed in the on position, and stays on after you start the vehicle, or if it comes on as you drive, have an authorized dealer service the air bag system immediately.

Maintaining Your Air Bag System

WARNING!

- **Modifications to any part of the air bag system could cause it to fail when you need it. You could be injured if the air bag system is not there to protect you. Do not modify the components or wiring, including adding any kind of badges or stickers to the steering wheel hub trim cover or the upper right side of the instrument panel. Do not modify the front bumper, vehicle body structure, or add aftermarket side steps or running boards.**
- **It is dangerous to try to repair any part of the air bag system yourself. Be sure to tell anyone who works on your vehicle that it has an air bag system.**

(Continued)

Downloaded from www.Manualslib.com manuals search engine

WARNING! ***(Continued)***

- **Do not attempt to modify any part of your air bag system. The air bag may inflate accidentally or may not function properly if modifications are made. Take your vehicle to an authorized dealer for any air bag system service. If your seat, including your trim cover and cushion, needs to be serviced in any way (including removal or loosening/tightening of seat attachment bolts), take the vehicle to your authorized dealer. Only manufacturer approved seat accessories may be used. If it is necessary to modify the air bag system for persons with disabilities, contact your authorized dealer.**

Event Data Recorder

This vehicle is equipped with an event data recorder (EDR). The main purpose of an EDR is to record, in certain crash or near crash-like situations, such as an air bag deployment or hitting a road obstacle, data that will assist in understanding how a vehicle's systems performed. The EDR is designed to record data related to vehicle dynamics and safety systems for a short period of time, typically 30 seconds or less. The EDR in this vehicle is designed to record such data as:

- How various systems in your vehicle were operating;
- Whether or not the driver and passenger seat belts were buckled/fastened;
- How far (if at all) the driver was pushing the accelerator and/or brake pedal; and,
- How fast the vehicle was traveling.

Downloaded from www.Manualslib.com manuals search engine

These data can help provide a better understanding of the circumstances in which crashes and injuries occur.

NOTE: EDR data are recorded by your vehicle only if a non-trivial crash situation occurs; no data are recorded by the EDR under normal driving conditions and no personal data (e.g., name, gender, age, and crash location) are recorded. However, other parties, such as law enforcement, could combine the EDR data with the type of personally identifying data routinely acquired during a crash investigation.

To read data recorded by an EDR, special equipment is required, and access to the vehicle or the EDR is needed. In addition to the vehicle manufacturer, other parties, such as law enforcement, that have the special equipment, can read the information if they have access to the vehicle or the EDR.

Child Restraints

Everyone in your vehicle needs to be buckled up at all times, including babies and children. Every state in the United States, and every Canadian province, requires that small children ride in proper restraint systems. This is the law, and you can be prosecuted for ignoring it.

Children 12 years or younger should ride properly buckled up in a rear seat, if available. According to crash statistics, children are safer when properly restrained in the rear seats rather than in the front.

Downloaded from www.Manualslib.com manuals search engine

WARNING!

In a collision, an unrestrained child can become a projectile inside the vehicle. The force required to hold even an infant on your lap could become so great that you could not hold the child, no matter how strong you are. The child and others could be badly injured. Any child riding in your vehicle should be in a proper restraint for the child's size.

There are different sizes and types of restraints for children from newborn size to the child almost large enough for an adult seat belt. Always check the child seat Owner's Manual to make sure you have the correct seat for your child. Carefully read and follow all the instructions and warnings in the child restraint Owner's Manual and on all the labels attached to the child restraint.

Before buying any restraint system, make sure that it has a label certifying that it meets all applicable Safety Standards. You should also make sure that you can install it in the vehicle where you will use it.

NOTE: For additional information, refer to www.seatcheck.org or call 1–866–SEATCHECK. Canadian residents should refer to Transport Canada's website for additional information: http://www.tc.gc.ca/eng/roadsafety/safedrivers-childsafety-index-53.htm

Downloaded from www.Manualslib.com manuals search engine

Summary Of Recommendations For Restraining Children In Vehicles

	Child Size, Height, Weight or Age	Recommended Type of Child Restraint
Infants and Toddlers	Children who are two years old or younger and who have not reached the height or weight limits of their child restraint	Either an Infant Carrier or a Convertible Child Restraint, facing rearward in the rear seat of the vehicle
Small Children	Children who are at least two years old or who have out-grown the height or weight limit of their rear-facing child restraint	Forward-Facing Child Restraint with a five-point Harness, facing forward in the rear seat of the vehicle
Larger Children	Children who have out-grown their forward-facing child restraint, but are too small to properly fit the vehicle's seat belt	Belt Positioning Booster Seat and the vehicle seat belt, seated in the rear seat of the vehicle
Children Too Large for Child Restraints	Children 12 years old or younger, who have out-grown the height or weight limit of their booster seat	Vehicle Seat Belt, seated in the rear seat of the vehicle

Downloaded from www.Manualslib.com manuals search engine

Infant and Child Restraints

Safety experts recommend that children ride rear-facing in the vehicle until they are two years old or until they reach either the height or weight limit of their rear-facing child restraint. Two types of child restraints can be used rear-facing: infant carriers and convertible child seats.

The infant carrier is only used rear-facing in the vehicle. It is recommended for children from birth until they reach the weight or height limit of the infant carrier. Convertible child seats can be used either rear-facing or forward-facing in the vehicle. Convertible child seats often have a higher weight limit in the rear-facing direction than infant carriers do, so they can be used rear-facing by children who have outgrown their infant carrier but are still less than at least two years old. Children should remain rear-facing until they reach the highest weight or height allowed by their convertible child seat.

WARNING!

- **Never place a rear-facing child restraint in front of an air bag. A deploying Passenger Advanced Front Air Bag can cause death or serious injury to a child 12 years or younger, including a child in a rear-facing child restraint.**
- **Only use rear-facing child restraint in a vehicle with a rear seat.**

Older Children And Child Restraints

Children who are two years old or who have outgrown their rear-facing convertible child seat can ride forward-facing in the vehicle. Forward-facing child seats and convertible child seats used in the forward-facing direction are for children who are over two years old or who have outgrown the rear-facing weight or height limit of their rear-facing convertible child seat. Children should

Downloaded from www.Manualslib.com manuals search engine

remain in a forward-facing child seat with a harness for as long as possible, up to the highest weight or height allowed by the child seat.

All children whose weight or height is above the forward-facing limit for the child seat should use a belt-positioning booster seat until the vehicle's seat belts fit properly. If the child cannot sit with knees bent over the vehicle's seat cushion while the child's back is against the seatback, they should use a belt-positioning booster seat. The child and belt-positioning booster seat are held in the vehicle by the seat belt.

WARNING!

- **Improper installation can lead to failure of an infant or child restraint. It could come loose in a collision. The child could be badly injured or killed. Follow the child restraint manufacturer's**

(Continued)

WARNING! ***(Continued)***

directions exactly when installing an infant or child restraint.

- **After a child restraint is installed in the vehicle, do not move the vehicle seat forward or rearward because it can loosen the child restraint attachments. Remove the child restraint before adjusting the vehicle seat position. When the vehicle seat has been adjusted, reinstall the child restraint.**
- **When your child restraint is not in use, secure it in the vehicle with the seat belt or LATCH anchorages, or remove it from the vehicle. Do not leave it loose in the vehicle. In a sudden stop or accident, it could strike the occupants or seatbacks and cause serious personal injury.**

Downloaded from www.Manualslib.com manuals search engine

Children Too Large For Booster Seats

Children who are large enough to wear the shoulder belt comfortably, and whose legs are long enough to bend over the front of the seat when their back is against the seatback, should use the seat belt in a rear seat. Use this simple 5-step test to decide whether the child can use the vehicle's seat belt alone:

1. Can the child sit all the way back against the back of the vehicle seat?
2. Do the child's knees bend comfortably over the front of the vehicle seat – while they are still sitting all the way back?
3. Does the shoulder belt cross the child's shoulder between their neck and arm?
4. Is the lap part of the belt as low as possible, touching the child's thighs and not their stomach?
5. Can the child stay seated like this for the whole trip?

If the answer to any of these questions was "no," then the child still needs to use a booster seat in this vehicle. If the child is using the lap/shoulder belt, check belt fit periodically and make sure the seat belt buckle is latched. A child's squirming or slouching can move the belt out of position. If the shoulder belt contacts the face or neck, move the child closer to the center of the vehicle, or use a booster seat to position the seat belt on the child correctly.

WARNING!

Never allow a child to put the shoulder belt under an arm or behind their back. In a crash, the shoulder belt will not protect a child properly, which may result in serious injury or death. A child must always wear both the lap and shoulder portions of the seat belt correctly.

Downloaded from www.Manualslib.com manuals search engine

Installing Child Restraints Using The Vehicle Seat Belt

The seat belt in the front passenger seat is equipped with a Switchable Automatic Locking Retractor (ALR). This type of seat belt is designed to keep the lap portion of the seat belt tight around the child restraint so that it is not necessary to use a locking clip. The ALR retractor can be "switched" into a locked mode by pulling all of the webbing out of the retractor and then letting the webbing retract back into the retractor. If it is locked, the ALR will make a clicking noise while the webbing is pulled back into the retractor. For additional information on ALR, refer to "Occupant Restraints" in "Things To Know Before Starting Your Vehicle."

The image below defines the type of feature for each seating position.

Lap/Shoulder Belt Systems For Installing Child Restraints In This Vehicle

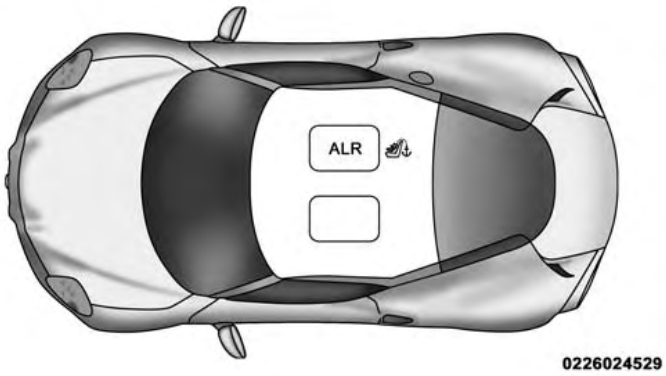

- ALR = Switchable Automatic Locking Retractor
- Top Tether Anchorage Symbol

Downloaded from www.Manualslib.com manuals search engine

What is the weight limit (child's weight + weight of the child restraint) for using the Tether Anchor with the seat belt to attach a forward facing child restraint?	Weight limit of the Child Restraint	Always use the tether anchor when using the seat belt to install a forward facing child restraint, up to the recommended weight limit of the child restraint.
Can the head restraints be removed?	No	
Can the buckle stalk be twisted to tighten the seat belt against the belt path of the child restraint?	No	Do not twist the buckle stalk in a seating position with an ALR retractor.

Installing A Child Restraint With A Switchable Automatic Locking Retractor (ALR):

1. Place the child seat in the center of the seating position. Move the vehicle seat as far rearward as possible to keep the child as far from the advanced passenger air bag as possible.
2. Pull enough of the seat belt webbing from the retractor to pass it through the belt path of the child restraint. Do not twist the belt webbing in the belt path.
3. Slide the latch plate into the buckle until you hear a "click."
4. Pull on the webbing to make the lap portion tight against the child seat.

Downloaded from www.Manualslib.com manuals search engine

5. To lock the seat belt, pull down on the shoulder part of the belt until you have pulled all the seat belt webbing out of the retractor. Then, allow the webbing to retract back into the retractor. As the webbing retracts, you will hear a clicking sound. This means the seat belt is now in the Automatic Locking mode.
6. Try to pull the webbing out of the retractor. If it is locked, you should not be able to pull out any webbing. If the retractor is not locked, repeat step 5.
7. Finally, pull up on any excess webbing to tighten the lap portion around the child restraint while you push the child restraint rearward and downward into the vehicle seat.
8. If the child restraint has a top tether strap and the seating position has a top tether anchorage, connect the tether strap to the anchorage and tighten the tether strap. See the section "Installing Child Restraints Using The Top Tether Anchorage" for directions to attach a tether anchor.
9. Test that the child restraint is installed tightly by pulling back and forth on the child seat at the belt path. It should not move more than 1 inch (25.4 mm) in any direction.

Any seat belt system will loosen with time, so check the belt occasionally, and pull it tight if necessary.

Installing Child Restraints Using The Top Tether Anchorage:

WARNING!

Do not attach a tether strap for a rear-facing car seat to any location in front of the car seat, including the seat frame or a tether anchorage. Only attach the

(Continued)

Downloaded from www.Manualslib.com manuals search engine

WARNING! ***(Continued)***

tether strap of a rear-facing car seat to the tether anchorage that is approved for that seating position, located behind the top of the vehicle seat. See the section "Lower Anchors and Tethers for CHildren (LATCH) Restraint System" for the location of approved tether anchorages in your vehicle.

Always use the tether anchor when using the seat belt to install a forward facing child restraint, up to the recommended weight limit of the child restraint. This vehicle is equipped with a tether anchorage, located behind the front passenger seat, near the floor.

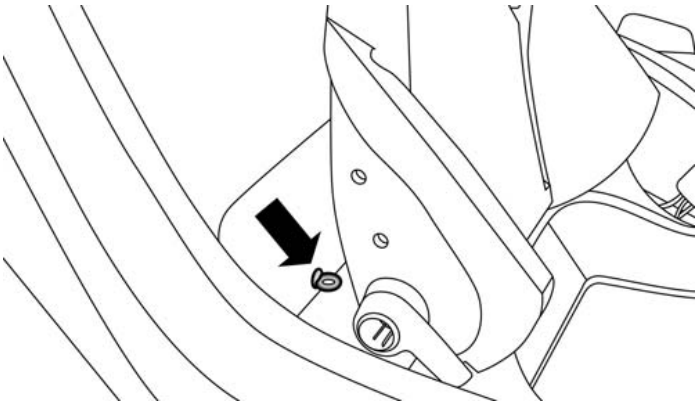

Upper Tether Anchorage

Downloaded from www.Manualslib.com manuals search engine

1. Look behind the seating position where you plan to install the child restraint to find the tether anchorage. You may need to tilt the seatback forward to provide better access to the tether anchorage.
2. Route the tether strap around the outboard side of the head restraint to the tether anchorage.
3. Attach the tether strap hook of the child restraint to the top tether anchorage.
4. Remove slack in the tether strap according to the child restraint manufacturer's instructions.

WARNING!

An incorrectly anchored tether strap could lead to increased head motion and possible injury to the child. Use only the anchorage position directly behind the child seat to secure a child restraint top tether strap.

Transporting Pets

Deploying air bags could harm your pet. An unrestrained pet will be thrown about and possibly injured, or injure a passenger during panic braking or in an collision.

Pets should be restrained in pet harnesses or pet carriers that are secured by seat belts.

ENGINE BREAK-IN RECOMMENDATIONS

A long break-in period is not required for the drivetrain (engine, transmission, and rear axle) in your new vehicle. Following these few simple guidelines is all that is necessary for a good break-in.

For the first 200 miles (300 km):

- Driving your vehicle with new transmission requires no special techniques but, to reach optimal shifting quality, it's preferred to use only Natural DNA mode in the first 125 miles (200 km), avoiding in this phase very aggressive driving.

Downloaded from www.Manualslib.com manuals search engine

- Avoid driving at a constant speed, either fast or slow, for long periods.
- Do not make any full throttle starts and avoid full throttle acceleration while cruising within the posted speed limits of local traffic laws.
- Use the proper gear for your speed range.
- Wait until the engine has reached normal operating temperature before driving at the recommended maximum break-in speed.
- Avoid excessive idling.
- Check the engine oil level at every fuel fill.

NOTE: A new engine will consume some oil during the first few thousand miles (kilometers) of operation. This should be considered a normal part of the break-in and not interpreted as a sign of difficulty.

SAFETY TIPS

Transporting Passengers

NEVER TRANSPORT PASSENGERS IN THE CARGO AREA.

WARNING!

- **Do not leave children or animals inside parked vehicles in hot weather. Interior heat build-up may cause serious injury or death.**
- **It is extremely dangerous to ride in a cargo area, inside or outside of a vehicle. In a collision, people riding in these areas are more likely to be seriously injured or killed.**
- **Do not allow people to ride in any area of your vehicle that is not equipped with seats and seat belts.**
- **Be sure everyone in your vehicle is in a seat and using a seat belt properly.**

Downloaded from www.Manualslib.com manuals search engine

Exhaust Gas

WARNING!

Exhaust gases can injure or kill. They contain carbon monoxide (CO), which is colorless and odorless. Breathing it can make you unconscious and can eventually poison you. To avoid breathing (CO), follow these safety tips:

- **Do not run the engine in a closed garage or in confined areas any longer than needed to move your vehicle in or out of the area.**
- **If you are required to drive with the trunk/liftgate/ rear doors open, make sure that all windows are closed and the climate control BLOWER switch is set at high speed. DO NOT use the recirculation mode.**

(Continued)

WARNING! ***(Continued)***

- **If it is necessary to sit in a parked vehicle with the engine running, adjust your heating or cooling controls to force outside air into the vehicle. Set the blower at high speed.**

The best protection against carbon monoxide entry into the vehicle body is a properly maintained engine exhaust system.

Whenever a change is noticed in the sound of the exhaust system, when exhaust fumes can be detected inside the vehicle, or when the underside or rear of the vehicle is damaged, have a competent mechanic inspect the complete exhaust system and adjacent body areas for broken, damaged, deteriorated, or mispositioned parts. Open seams or loose connections could permit exhaust fumes to seep into the passenger compartment. In addition, inspect the exhaust system each time the vehicle is raised for lubrication or oil change. Replace as required.

Downloaded from www.Manualslib.com manuals search engine

Safety Checks You Should Make Inside The Vehicle

Seat Belts

Inspect the belt system periodically, checking for cuts, frays, and loose parts. Damaged parts must be replaced immediately. Do not disassemble or modify the system.

Front seat belt assemblies must be replaced after a collision. Seat belt assemblies must be replaced after a collision if they have been damaged (i.e., bent retractor, torn webbing, etc.). If there is any question regarding belt or retractor condition, replace the belt.

Air Bag Warning Light

The light should come on and remain on for four to eight seconds as a bulb check when the ignition is first cycled to ON. If the light is not lit during starting, see your authorized dealer. If the light stays on, flickers, or comes on while driving, have the system checked by an authorized dealer.

Defroster

Check operation by selecting the defrost mode and place the blower control on high speed. You should be able to feel the air directed against the windshield. See your authorized dealer for service if your defroster is inoperable.

Floor Mat Safety Information

Always use floor mats designed to fit the foot well of your vehicle. Use only floor mats that leave the pedal area unobstructed and that are firmly secured so that they cannot slip out of position and interfere with the pedals or impair safe operation of your vehicle in other ways.

Downloaded from www.Manualslib.com manuals search engine

Periodic Safety Checks You Should Make Outside The Vehicle

Tires

Examine tires for excessive tread wear and uneven wear patterns. Check for stones, nails, glass, or other objects lodged in the tread. Inspect the tread and sidewall for cuts and cracks. Check the wheel nuts for tightness. Check the tires for proper pressure.

Lights

Have someone observe the operation of brake lights and exterior lights while you work the controls. Check turn signal and high beam indicator lights on the instrument panel.

Door Latches

Check for positive closing, latching, and locking.

Fluid Leaks

Check area under vehicle after overnight parking for fuel, engine coolant, oil, or other fluid leaks. Also, if gasoline fumes are detected or if fuel, power steering fluid (if equipped), or brake fluid leaks are suspected, the cause should be located and corrected immediately.

Downloaded from www.Manualslib.com manuals search engine

Downloaded from www.Manualslib.com manuals search engine

UNDERSTANDING THE FEATURES OF YOUR VEHICLE

CONTENTS

■ MIRRORS 74
- □ Inside Day/Night Mirror 74
- □ Outside Mirrors 75
- □ Power Mirrors 75
- □ Folding Mirrors. 76
- □ Heated Mirrors 76

■ SEATS 77
- □ Manual Seats 77
- □ Non-Adjustable Head Restraints. 80

■ TO OPEN AND CLOSE THE DECKLID 80

■ LIGHTS 83
- □ Multifunction Lever. 83
- □ Headlights 84
- □ Daytime Running Lights 85
- □ High Beams 85
- □ Flash-To-Pass 85
- □ Parking Lights 85
- □ Turn Signals 85
- □ Lane Change Assist 86

Downloaded from www.Manualslib.com manuals search engine

- Follow Me Home/Headlight Delay — If Equipped 86
- Dimmer Controls 87
- Interior Light 87

■ WINDSHIELD WIPERS AND WASHERS 89
- Intermittent Wiper System 89
- Windshield Wiper Operation 89
- Mist 89
- Windshield Washers 90

■ TILT/TELESCOPING STEERING COLUMN 91

■ ELECTRONIC SPEED CONTROL — IF EQUIPPED 92
- To Activate 93
- To Set A Desired Speed 93
- To Deactivate 93
- To Resume Speed 94
- To Vary The Speed Setting 94
- To Accelerate For Passing 95

■ PARKING SENSORS — IF EQUIPPED 96
- Activation/Deactivation 96
- Acoustic Signal 96
- Indications On Display — If Equipped 97
- Fault Indication 98
- General Warnings 98

■ POWER OUTLETS 100

■ CIGAR LIGHTER AND ASH RECEIVER — IF EQUIPPED 103

Downloaded from www.Manualslib.com manuals search engine

■ CUPHOLDER 104
■ STORAGE 104
□ Seatback Storage 104
□ Console Features 105
□ Rear Compartment Storage. 105

Downloaded from www.Manualslib.com manuals search engine

MIRRORS

Inside Day/Night Mirror

A single ball joint mirror is provided in the vehicle. It is a twist on mirror that has a fixed position at the windshield. The mirror installs on the windshield button with a counterclockwise rotation and requires no tools for mounting. The mirror head can be adjusted up, down, left, and right for various drivers. The mirror should be adjusted to center on the view through the rear window.

Headlight glare from vehicles behind you can be reduced by moving the small control under the mirror to the night position (toward the rear of the vehicle). The mirror should be adjusted while the small control under the mirror is set in the day position (toward the windshield).

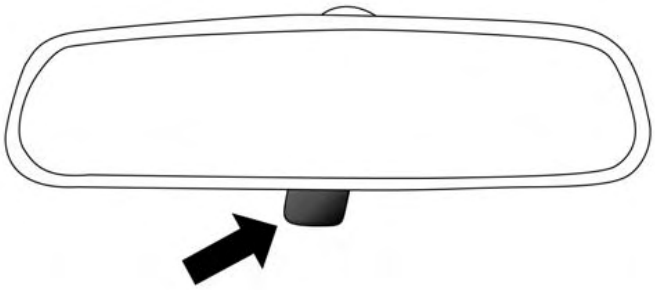

Adjusting Rearview Mirror

Downloaded from www.Manualslib.com manuals search engine

Outside Mirrors

To receive maximum benefit, adjust the outside mirrors to center on the adjacent lane of traffic and a slight overlap of the view obtained from the inside mirror.

NOTE: The passenger side convex outside mirror will give a much wider view to the rear, and especially of the lane next to your vehicle.

WARNING!

Vehicles and other objects seen in the passenger side convex mirror will look smaller and farther away than they really are. Relying too much on your passenger side mirror could cause you to collide with another vehicle or other object. Use your inside mirror when judging the size or distance of a vehicle seen in the passenger side mirror.

Power Mirrors

The power mirror controls are located on the center console.

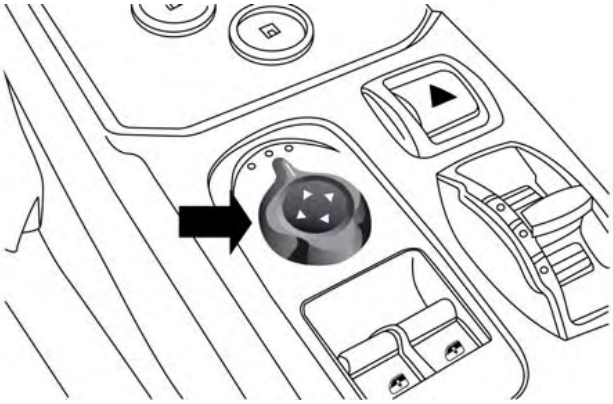

Power Mirror Control

Downloaded from www.Manualslib.com manuals search engine

The power mirror controls consist of mirror select knob and a four-way mirror control switch. To adjust a mirror, turn the power mirror control knob to the left or right to select the mirror that you want to adjust.

Using the mirror control switch, press on any of the four arrows for the direction that you want the mirror to move.

Folding Mirrors

The exterior mirrors are hinged to allow the mirror to pivot forward or rearward to help avoid damage. The mirror has three detent positions: full forward, full rearward and normal.

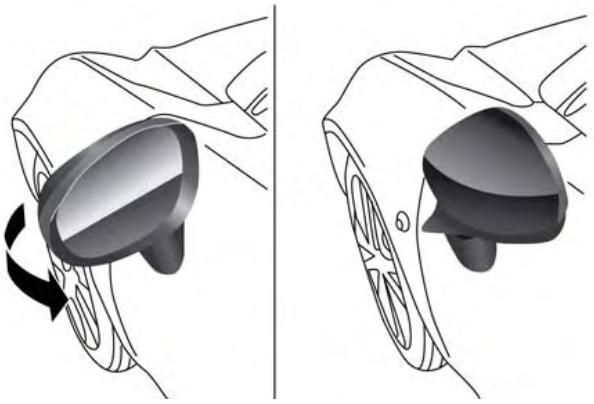

Folding Mirrors

Heated Mirrors

These mirrors are heated to melt frost or ice. This feature can be activated whenever you turn on the mirror defroster.

Downloaded from www.Manualslib.com manuals search engine

SEATS

Seats are a part of the Occupant Restraint System of the vehicle.

WARNING!

- **It is dangerous to ride in a cargo area, inside or outside of a vehicle. In a collision, people riding in these areas are more likely to be seriously injured or killed.**
- **Do not allow people to ride in any area of your vehicle that is not equipped with seats and seat belts. In a collision, people riding in these areas are more likely to be seriously injured or killed.**
- **Be sure everyone in your vehicle is in a seat and using a seat belt properly.**

Manual Seats

Forward And Rearward Adjustment

The adjusting bar is at the front of the driver seat, near the floor. Pull the bar upward to move the seat forward or rearward. Release the bar once the seat is in the desired position. Then, using body pressure, move forward and rearward on the seat to be sure that the seat adjusters have latched.

Downloaded from www.Manualslib.com manuals search engine

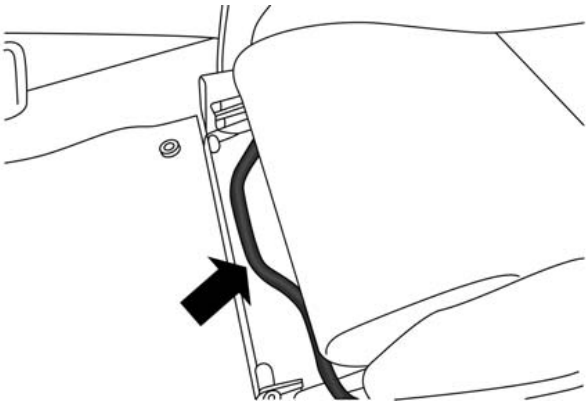

Seat Adjustment Bar

Seat Height Adjustment

In order to achieve the ideal driving position, the height of the seats can also be adjusted. Tools are required to make this height adjustment. Contact your authorized dealership.

Recliner Adjustment

The recliner lever is located on the outboard side of the seat. To recline the seat, lean forward slightly, pull the recliner lever upward, lean backward until the seat is in the desired position, and release the lever. To return the seat to its full upright position, lean forward, pull the recliner lever upward and hold it until the seat returns to its full upright position.

Downloaded from www.Manualslib.com manuals search engine

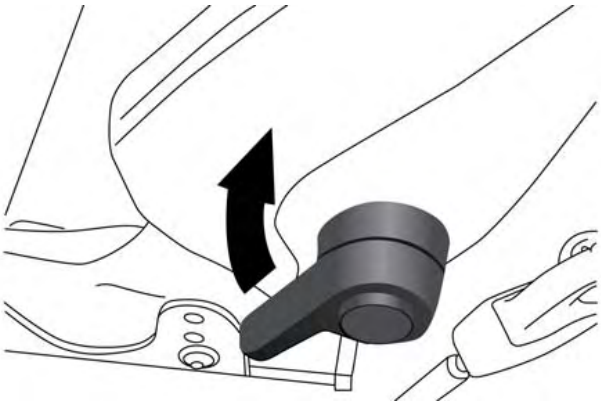

Recline Lever

WARNING!

- **Adjusting a seat while driving may be dangerous. Moving a seat while driving could result in loss of control which could cause a collision and serious injury or death.**
- **Seats should be adjusted before fastening the seat belts and while the vehicle is parked. Serious injury or death could result from a poorly adjusted seat belt.**
- **Do not ride with the seatback reclined so that the shoulder belt is no longer resting against your chest. In a collision you could slide under the seat belt, which could result in serious injury or death.**

Downloaded from www.Manualslib.com manuals search engine

Non-Adjustable Head Restraints

The non-adjustable head restraints are form fitted into the upper structure of the seatback and are designed to reduce the risk of injury by restricting head movement in the event of a rear impact. The seatback should be properly adjusted to an upright position where the head restraint is positioned as close as possible to the back of your head.

WARNING!

Be certain that the seatback is locked securely into position. Otherwise, the seat will not provide the proper stability for passengers. An improperly latched seatback could cause serious injury.

TO OPEN AND CLOSE THE DECKLID

CAUTION!

- **To prevent possible damage, do not slam the decklid to close it. Use a firm downward push at the center of the decklid to ensure the decklid latch is fully engaged.**
- **During normal car operation, the luggage compartment (located rear of the engine) can reach temperatures above 149 degrees. Do not transport objects in the luggage compartment that may be damaged at such temperatures. Do not place aerosol cans in the luggage compartment.**

Downloaded from www.Manualslib.com manuals search engine

To open the decklid:

1. Open the drivers side door.
2. Pull the decklid release lever located on the rear of the drivers door sill.

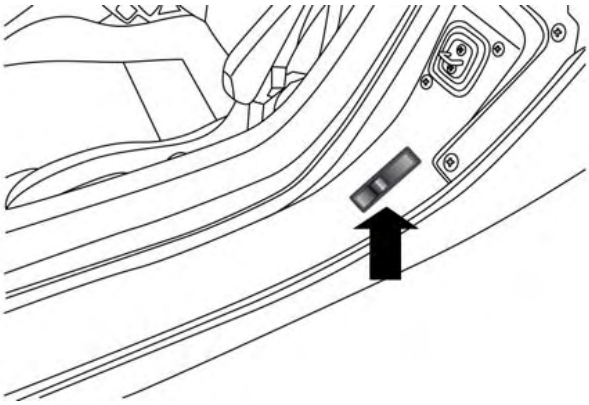

Decklid Release Lever

3. Move to the rear of the vehicle and lift the decklid.

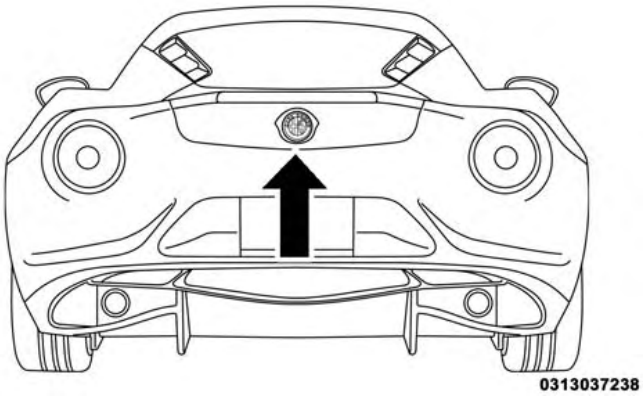

Decklid Lift Point Location

Downloaded from www.Manualslib.com manuals search engine

4. Lift upward on the decklid prop rod to release it from the stowage retainer.

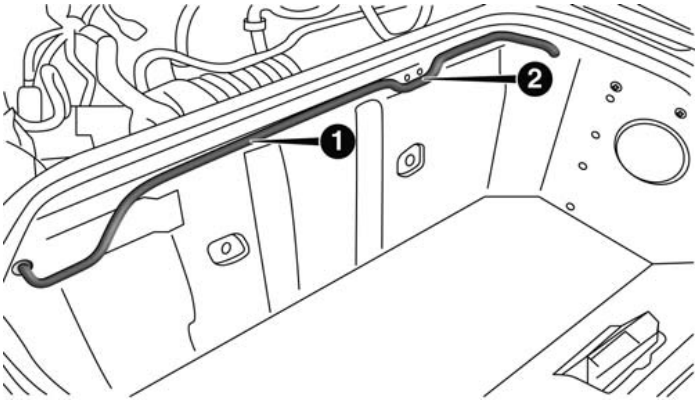

1 — Decklid Prop Rod
2 — Stowage Retainer Location

5. Place the decklid prop rod in the decklid slot to secure the decklid in the open position.

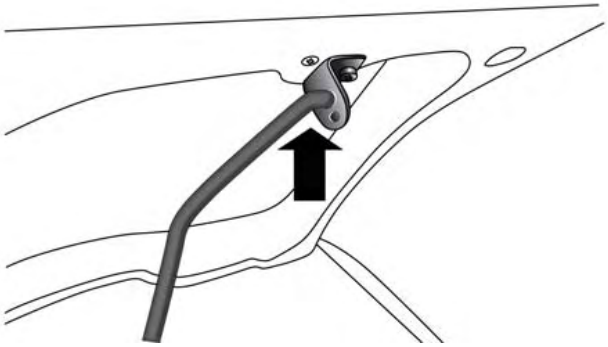

Decklid Prop Rod Slot

Downloaded from www.Manualslib.com manuals search engine

CAUTION!

To prevent possible damage, do not slam the decklid to close it. Use a firm downward push at the center of the decklid to ensure the decklid latch is fully engaged.

WARNING!

- **The maximum load limit for the luggage compartment, in addition to the kits provided, is 33.1 lbs. (15kg). Do not exceed the maximum permitted load in the luggage compartment. When accessing the rear luggage compartment, do not come into contact with engine, or other components, that may be hot and could burn you if touched.**

(Continued)

WARNING! ***(Continued)***

- **Access the luggage compartment only with the vehicle stationary. Before exiting the vehicle, you should always place the vehicle into First gear, apply the parking brake, and remove the key from the ignition. Never leave the key fob in the vehicle or in a location accessible to children.**
- **The decklid may drop suddenly, causing serious injury, if the supporting rod is not positioned correctly.**
- **The decklid must always be closed properly, and the lock engaged, while the vehicle is in motions.**

LIGHTS

Multifunction Lever

The multifunction lever, located on the left side of the steering wheel, controls the operation of the headlights, headlight beam selection, passing light and turn signals.

Downloaded from www.Manualslib.com manuals search engine

NOTE: The external lights can only be turned on with the ignition in the ON/RUN position.

Multifunction Lever

Headlights

Rotate the end of the multifunction lever upward to the first detent for headlight operation.

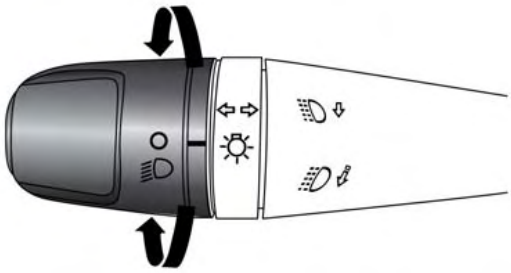

Headlight Operation

Downloaded from www.Manualslib.com manuals search engine

NOTE: When the headlights are turned on, the Daytime Running Lights will be deactivated.

Daytime Running Lights

To activate the Daytime Running Lights (DRL), rotate the end of the multifunction lever to the **O** symbol.

NOTE: The low beams and side/tail lights will not be on with DRL.

High Beams

With the low beams activated, pull the multifunction lever towards the steering wheel to turn on the high beams. A high beam symbol will illuminate in the cluster to indicate the high beams are on. Pull the multifunction lever a second time to switch the headlights back to low beam.

Flash-To-Pass

You can signal another vehicle with your headlights by partially pulling the multifunction lever toward the steering wheel. This will cause the high beam headlights to turn on until the lever is released.

Parking Lights

To turn on the parking lights, remove the key or turn the ignition to OFF/LOCK position and turn on the headlights.

Turn Signals

Move the multifunction lever up or down and the arrows on each side of the instrument cluster flash to show proper operation of the front and rear turn signal lights.

Downloaded from www.Manualslib.com manuals search engine

NOTE: If either light remains on and does not flash, or there is a very fast flash rate, check for a defective outside light bulb. If an indicator fails to light when the lever is moved, it would suggest that the indicator bulb is defective.

Lane Change Assist

Tap the lever up or down once, without moving beyond the detent, and the turn signal (right or left) will flash five times then automatically turn off.

Follow Me Home/Headlight Delay — If Equipped

When this feature is selected the driver can choose to have the headlights remain on for a preset period of time.

Activation

Remove the key or turn the ignition to the OFF/LOCK position, and pull the multifunction lever toward the steering wheel, within two minutes. Each time the lever is pulled, the activation of the lights will be extended by 30 seconds. The activation of the lights can be extended to a maximum of 210 seconds.

Deactivation

Pull the multifunction lever toward the steering wheel and hold it for more than two seconds.

Downloaded from www.Manualslib.com manuals search engine

Dimmer Controls

The dimmer controls are located on the left side of the instrument panel below the instrument cluster.

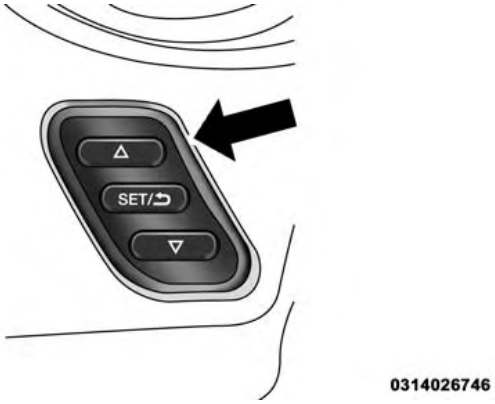

Dimmer Controls

Pressing the up or down arrow will increase or decrease the brightness of the instrument panel lights.

Interior Light

The interior light is located in the headliner in between the sun visors. The interior light can be set to three different positions (Off/Left Position, Center Position, On/Right Position).

Using the interior light lens, press the lens to the right from its center position and the lights are always on. Press the lens to the left from its center position and the lights are always off. Leave the lens in the center position, and the light is turned on and off when the doors are opened or closed.

Downloaded from www.Manualslib.com manuals search engine

CAUTION!

Before getting out of the vehicle be sure that the switch is in the center position or that the lights are off to avoid draining the battery.

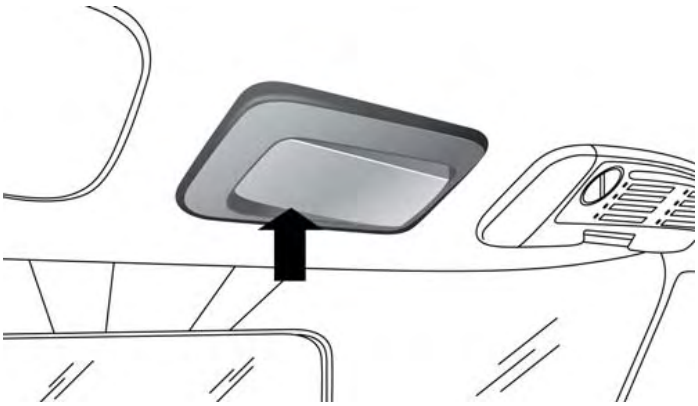

Interior Light (Off Position Shown)

Interior Light Timing (Center Position)

There are four different modes of operation that can be activated in this position:

- When one door is opened a three minute timer is activated.
- When the key is removed from the ignition (within two minutes of the ignition being turned off), a 10 second timer is activated.
- When the doors are unlocked with the Key Fob a 10 second timer is activated.
- When the doors are locked with the Key Fob the lights will turn off.

Downloaded from www.Manualslib.com manuals search engine

WINDSHIELD WIPERS AND WASHERS

The windshield wiper/washer controls are located on the windshield wiper/washer lever on the right side of the steering column. The front wipers are operated by rotating a switch, located on the end of the lever.

Windshield Wiper/Washer Lever

Intermittent Wiper System

Use the intermittent wiper when weather conditions make a single wiping cycle with a variable pause between cycles. Rotate the end of the multifunction lever to the first detent position. There are four possible delay intervals that depend on the vehicle speed.

Windshield Wiper Operation

Rotate the end of the lever upward, to the first detent past the intermittent settings for low-speed wiper operation. Rotate the end of the lever upward to the second detent past the intermittent settings for high-speed wiper operation.

Mist

Use the mist feature when weather conditions make occasional usage of the wipers necessary. Push the lever upward to the mist position and release for a single wiping cycle.

Downloaded from www.Manualslib.com manuals search engine

NOTE: The mist feature does not activate the washer pump; therefore, no washer fluid will be sprayed on the windshield. The wash function must be used in order to spray the windshield with washer fluid.

Windshield Washers

To use the washer, pull the lever toward you and hold while spray is desired. If the lever is pulled while in the delay range, the wiper will start and continue to operate for three wipe cycles after the lever is released, and then resume the intermittent interval previously selected.

If the lever is pulled while in the off position, the wipers will operate for three wipe cycles and then turn off.

WARNING!

Sudden loss of visibility through the windshield could lead to a collision. You might not see other vehicles or other obstacles. To avoid sudden icing of the windshield during freezing weather, warm the windshield with defroster before and during windshield washer use.

Downloaded from www.Manualslib.com manuals search engine

TILT/TELESCOPING STEERING COLUMN

This feature allows you to tilt the steering column upward or downward. It also allows you to lengthen or shorten the steering column. The tilt/telescoping control handle is located below the steering wheel at the end of the steering column.

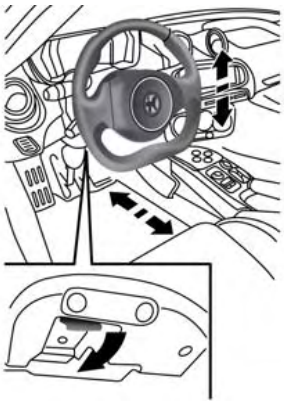

Tilt/Telescoping Column Lever

To unlock the steering column, push the lever downward (toward the floor). To tilt the steering column, move the steering wheel upward or downward as desired. To lengthen or shorten the steering column, pull the steering wheel outward or push it inward as desired. To lock the steering column in position, push the lever upward until fully engaged.

WARNING!

Do not adjust the steering column while driving. Adjusting the steering column while driving or driving with the steering column unlocked, could cause the driver to lose control of the vehicle. Failure to follow this warning may result in serious injury or death.

Downloaded from www.Manualslib.com manuals search engine

ELECTRONIC SPEED CONTROL — IF EQUIPPED

When engaged, the Electronic Speed Control takes over accelerator operations at speeds greater than 18 mph (30 km/h) up to the maximum speed of 105 mph (170 km/h).

The Electronic Speed Control Lever is located on the left side of the steering column.

NOTE: In order to ensure proper operation, the Electronic Speed Control system has been designed to shut down if multiple speed control functions are operated at the same time. If this occurs, the Electronic Speed Control system can be reactivated rotating the end of the multi-function lever (On/Off) and resetting the desired vehicle set speed.

Electronic Speed Control Lever

Downloaded from www.Manualslib.com manuals search engine

To Activate

Rotate the end of the multifunction lever to activate the Electronic Speed Control. The Cruise Indicator Light in the Electronic Vehicle Information Center (EVIC) will illuminate. To turn the system off, rotate the end of the multifunction lever to the "O" position. The Cruise Indicator Light will turn off. The system should be turned off when not in use.

WARNING!

Leaving the Electronic Speed Control system on when not in use is dangerous. You could accidentally set the system or cause it to go faster than you want. You could lose control and have an accident. Always leave the system OFF when you are not using it.

To Set A Desired Speed

Turn the Electronic Speed Control ON. When the vehicle has reached the desired speed, move the electronic speed control lever upward SET(+) and release. Release the accelerator and the vehicle will operate at the selected speed.

NOTE: The vehicle should be traveling at a steady speed and on level ground before moving the electronic speed control lever upward SET(+).

To Deactivate

A soft tap on the brake pedal, pushing the RESUME/CANCEL button, or normal brake pressure while slowing the vehicle will deactivate Electronic Speed Control without erasing the set speed memory. Rotating the end of the multifunction lever to the "O" position or turning the ignition switch OFF erases the set speed memory.

Downloaded from www.Manualslib.com manuals search engine

To Resume Speed

To resume a previously set speed, push the RESUME button and release. Resume can be used at any speed above 18 mph (30 km/h).

To Vary The Speed Setting

To Increase Speed

When the Electronic Speed Control is set, you can increase speed by tapping the Speed Control lever up (+).

The speed increment shown is dependant on the speed of U.S. (mph) or Metric (km/h) units:

U.S. Speed (mph)

- Tapping the Speed Control lever up (+) once will result in a 1 mph increase in set speed. Each subsequent tap of the lever results in an increase of 1 mph.
- If the lever is continually help up, the set speed will continue to increase until the lever is released, then the new set speed will be established.

Metric Speed (km/h)

- Tapping the Speed Control lever up (+) once will result in a 2 km/h increase in set speed. Each subsequent tap of the lever results in an increase of 2 km/h.
- If the lever is continually help up, the set speed will continue to increase until the lever is released, then the new set speed will be established.

To Decrease Speed

When the Electronic Speed Control is set, you can decrease speed by tapping the Speed Control lever down (-).

Downloaded from www.Manualslib.com manuals search engine

The speed decrement shown is dependant on the speed of U.S. (mph) or Metric (km/h) units:

U.S. Speed (mph)

- Tapping the Speed Control lever down (-) once will result in a 1 mph decrease in set speed. Each subsequent tap of the lever results in a decrease of 1 mph.
- If the lever is continually held down, the set speed will continue to decrease until the lever is released, then the new set speed will be established.

Metric Speed (km/h)

- Tapping the Speed Control lever down (-) once will result in a 2 km/h decrease in set speed. Each subsequent tap of the lever results in a decrease of 2 km/h.
- If the lever is continually held down, the set speed will continue to decrease until the lever is released, then the new set speed will be established.

To Accelerate For Passing

Press the accelerator as you would normally. When the pedal is released, the vehicle will return to the set speed.

Downloaded from www.Manualslib.com manuals search engine

PARKING SENSORS — IF EQUIPPED

They are located in the rear bumper and their function is to detect the presence of any obstacles near the rear part of the car; they consequently inform the driver, through an intermittent acoustic signal.

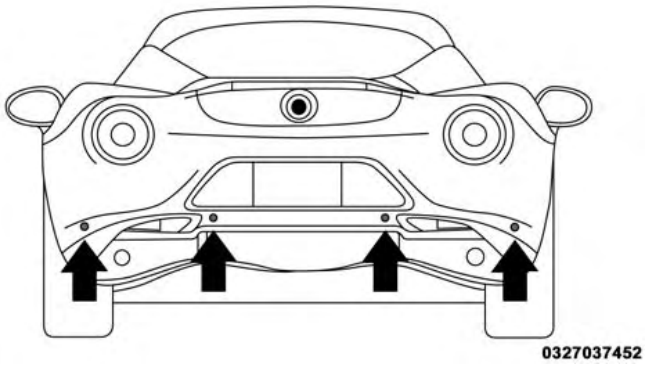

Parking Sensors

Activation/Deactivation

The sensors are automatically activated when reverse gear is engaged. As the obstacle behind the car gets closer, the acoustic signal becomes more frequent.

Acoustic Signal

When reverse gear is engaged and there is an obstacle behind the vehicle, an acoustic signal is emitted which varies according to the distance of the bumper from the obstacle.

The frequency of the acoustic signal:

- Increases as the distance between car and obstacle decreases, culminating in a continuous acoustic signal when the distance is less than approximately 12 in (30 cm).
- Decreases if the distance from the obstacle increases, until the signal ceases entirely.

Downloaded from www.Manualslib.com manuals search engine

- Remains constant if the distance between car and obstacle remains unchanged; if this situation concerns the side sensors, the signal will stop after approximately 3 seconds to avoid, for example, indications in the event of manoeuvres along a wall.

If several obstacles are detected by the sensors, only the nearest one is considered.

Indications On Display — If Equipped

When the sensors are activated, the screen appears on the display.

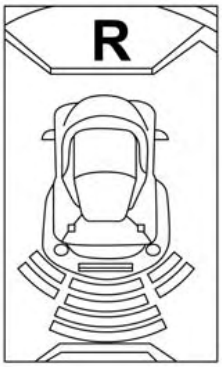

0327037451

Parking Sensors Screen

Obstacle presence and distance information is therefore provided both by the acoustic signal and the instrument panel display.

The system indicates a detected obstacle by displaying an arc in one or more positions according to the distance of the obstacle and its position in relation to the car.

Downloaded from www.Manualslib.com manuals search engine

If an obstacle is detected in the rear central area, the display shows all the arcs in the rear central area, up to the one that corresponds to the position of the obstacle itself.

The signal is similar for obstacles in the rear left or right area.

The arc that corresponds to the position of the obstacle will flash.

The color on the display depends on the distance from and position of the obstacle.

The car is close to the obstacle when the display shows a single constant arc and emits a continuous sound.

If there are several obstacles, the closest one is indicated.

Fault Indication

Parking sensor failures, if any, will be indicated when reverse is engaged by the switching on of the warning light on the instrument panel together with the message on the display.

General Warnings

When parking, take the utmost care over obstacles that may be above or under the sensor.

Under certain circumstances, objects close to the vehicle are not detected by the system and could therefore cause damage to the car or be damaged themselves.

Some conditions may influence the performance of the parking sensors:

- The presence of ice, snow, mud or multiple layers of paint on the sensor surface may cause reduced sensitivity of the sensor itself and therefore reduce the system performance.

Downloaded from www.Manualslib.com manuals search engine

- Mechanical interference (e.g washing the car, rain, strong wind, hail) may cause the sensor to detect a non-existent obstacle ("echo interference").
- The presence of ultrasonic systems (e.g. pneumatic brake systems of trucks or pneumatic drills) near the car could alter the signals sent by the sensor.
- The variation in sensor position, caused by variation in ride (due to suspension component wear), changing tires, overloaded car, or tuning that lowers the car, for example, may affect parking sensor system performance.

NOTE: The sensor must be free from mud, dirt snow or ice in order for the system to operate correctly. Be careful not to scratch or damage the sensors while cleaning them. Avoid using dry, rough or hard cloths. The sensors must be washed using clean water, with the addition of car shampoo if necessary. When using special washing equipment such as high pressure jets or steam cleaning, clean the sensors very quickly keeping the jet more than 4 in (10 cm) away. Also, do not apply stickers to the sensors.

CAUTION!

- **The Parking Sensor system is only a parking aid and it is unable to recognize every obstacle, including small obstacles. Parking curbs might be temporarily detected or not detected at all. Obstacles located above or below the sensors will not be detected when they are in close proximity**

(Continued)

Downloaded from www.Manualslib.com manuals search engine

CAUTION! *(Continued)*

- **The vehicle must be driven slowly when using the Parking Sensor system in order to be able to stop in time when an obstacle is detected. It is recommended that the driver looks over his/her shoulder when using the Parking Sensor system.**

WARNING!

Drivers must be careful when backing up even when using the Parking Sensor system. Always check carefully behind your vehicle, and be sure to check for pedestrians, animals, other vehicles, obstructions, or blind spots before backing up. You are responsible for the safety of your surroundings and must continue to pay attention while backing up. Failure to do so can result in serious injury or death.

POWER OUTLETS

Your vehicle is equipped with a 12 Volt (13 Amp) power outlet that can be used to power cellular phones, small electronics and other low powered electrical accessories.

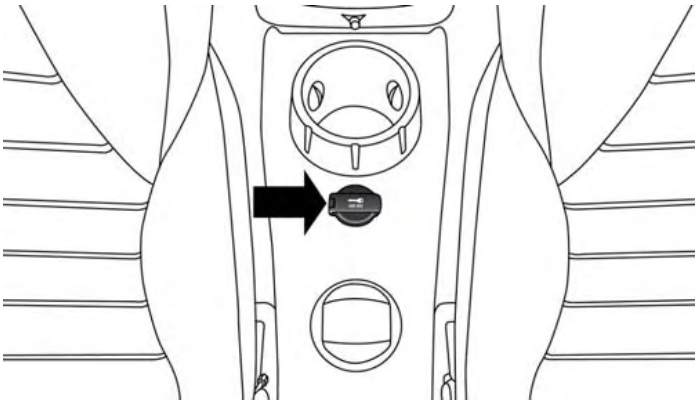

Front Power Outlet

Downloaded from www.Manualslib.com manuals search engine

The power outlet is located on the central tunnel, between the two cup holders. It only operates with the ignition key at MAR-ON.

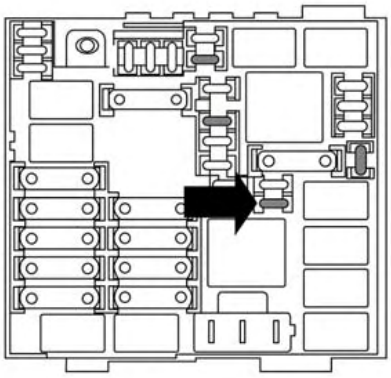

Power Outlet Fuse Location

WARNING!

To avoid serious injury or death:

- **Only devices designed for use in this type of outlet should be inserted into any 12 Volt outlet.**
- **Do not touch with wet hands.**
- **Close the lid when not in use and while driving the vehicle.**
- **If this outlet is mishandled, it may cause an electric shock and failure.**

Downloaded from www.Manualslib.com manuals search engine

CAUTION!

- Many accessories that can be plugged in draw power from the vehicle's battery, even when not in use (i.e., cellular phones, etc.). Eventually, if plugged in long enough, the vehicle's battery will discharge sufficiently to degrade battery life and/or prevent the engine from starting.
- Accessories that draw higher power (i.e., coolers, vacuum cleaners, lights, etc.) will degrade the battery even more quickly. Only use these intermittently and with greater caution.
- After the use of high power draw accessories, or long periods of the vehicle not being started (with accessories still plugged in), the vehicle must be driven a sufficient length of time to allow the generator to recharge the vehicle's battery.

CAUTION!

- Do not exceed the maximum power of 180 Watts (15 Amps) at 12 Volts. If the 180 Watts (15 Amps) power rating is exceeded, the fuse protecting the system will need to be replaced.
- Power outlets are designed for accessory plugs only. Do not insert any other object in the power outlets as this will damage the outlet and blow the fuse. Improper use of the power outlet can cause damage not covered by your New Vehicle Limited Warranty.

Downloaded from www.Manualslib.com manuals search engine

CIGAR LIGHTER AND ASH RECEIVER — IF EQUIPPED

The cigar lighter and ash receiver are located on the central tunnel. To activate the cigar lighter, press the button down. After a few seconds the button automatically returns to its initial position, and the cigar lighter is ready for use.

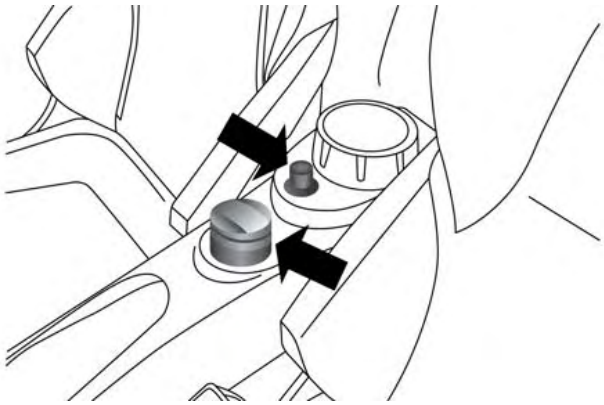

Cigar Lighter/Ashtray — If Equipped

NOTE:

- Always check that the cigar lighter is switched off.
- Do not connect devices with power higher than 180 W to the socket.
- Do not damage the socket by using unsuitable adaptors.

Downloaded from www.Manualslib.com manuals search engine

CUPHOLDER

A cupholder is located in the rear of the center console.

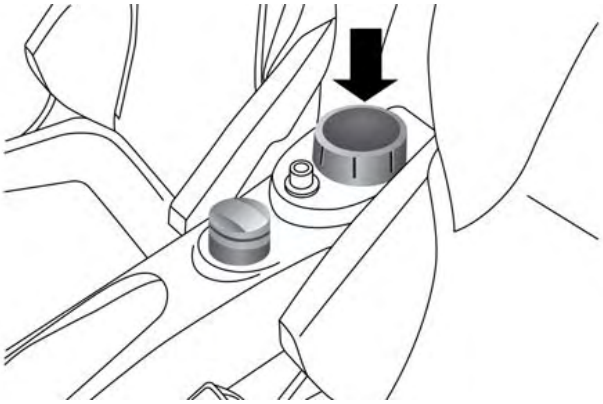

Center Console Cupholder

STORAGE

Seatback Storage

Located in the back of both the driver and passenger front seats are pockets that can be used for storage.

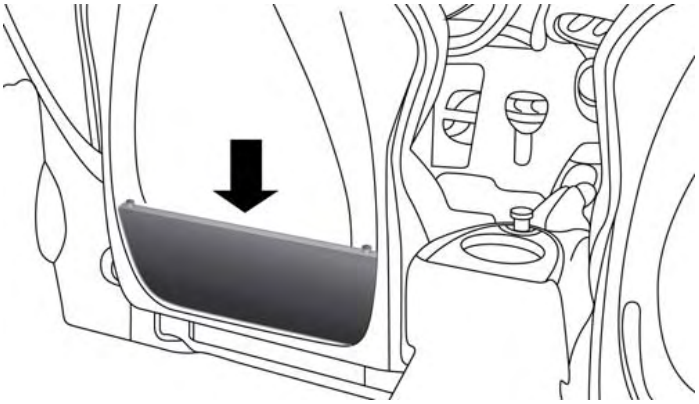

Drivers Side Seatback Storage

Downloaded from www.Manualslib.com manuals search engine

Console Features

There is a cargo pouch storage area located between the driver and passengers seat (If Equipped).

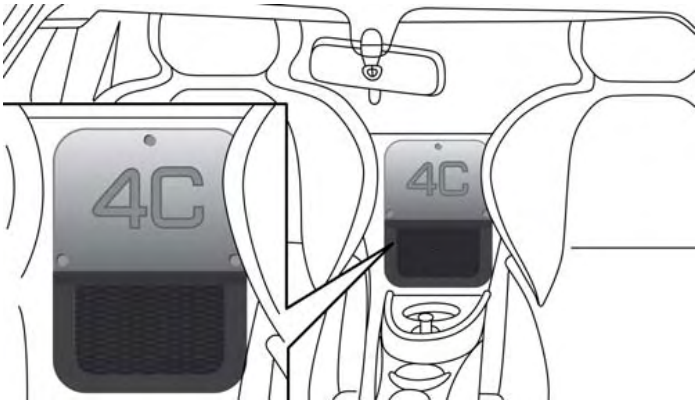

Cargo Pouch Storage Location

Rear Compartment Storage

CAUTION!

- **To prevent possible damage, do not slam the decklid to close it. Use a firm downward push at the center of the decklid to ensure the decklid latch is fully engaged.**
- **During normal car operation, the luggage compartment (located rear of the engine) can reach temperatures above 149 degrees. Do not transport objects in the luggage compartment that may be damaged at such temperatures. Do not place aerosol cans in the luggage compartment.**

Downloaded from www.Manualslib.com manuals search engine

Your vehicle is equipped with a open storage area located under the decklid.

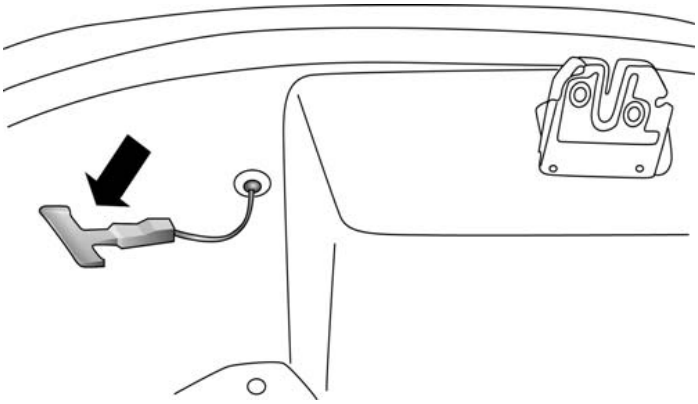

Decklid Emergency Release

WARNING!

Do not allow children to have access to rear storage compartment. Always close the hood when your vehicle is unattended. Once in the rear storage compartment, young children may not be able to escape. If trapped in the rear compartment, children can die from suffocation or heat stroke.

As a security measure, an internal decklid emergency release lever is built into the rear compartment storage latching mechanism. In a event of a person trapped inside the storage compartment, the decklid can be simply opened by pulling on the phosphorescent handle attached to the decklid latching mechanism.

Downloaded from www.Manualslib.com manuals search engine

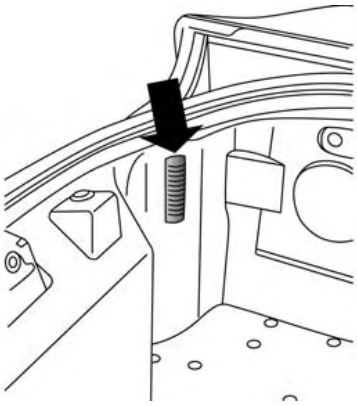

Rear Compartment Light

WARNING!

- **The maximum load limit for the luggage compartment (located rear of the engine), in addition to the kits provided, is 33 lbs. (15kg). Do not exceed the**

(Continued)

WARNING! *(Continued)*

maximum permitted load in the luggage compartment. When accessing the rear luggage compartment, do not come into contact with engine, or other components, that may be hot and could burn you if touched.

- **Access the luggage compartment only with the vehicle stationary. Before exiting a vehicle, you should always shift the vehicle into PARK, remove the key from the ignition, and apply the parking brake. Never leave the key fob in the vehicle or in a location accessible to children.**
- **The decklid may drop suddenly, causing serious injury, if the supporting rod is not positioned correctly.**
- **The decklid must always be closed properly, and the lock engaged, while the vehicle is in motions.**

Downloaded from www.Manualslib.com manuals search engine

Downloaded from www.Manualslib.com manuals search engine

UNDERSTANDING YOUR INSTRUMENT PANEL

CONTENTS

- INSTRUMENT PANEL FEATURES 110
- INSTRUMENT CLUSTER 111
- INSTRUMENT CLUSTER DESCRIPTIONS 112
- ELECTRONIC VEHICLE INFORMATION CENTER (EVIC) 125
  - Electronic Vehicle Information Center (EVIC) Setup Menu 127
  - Change Engine Oil Indicator System 137
  - Trip Computer 137
  - Values Displayed 140
- RADIO SYSTEM. 142
- RADIO OPERATION AND MOBILE PHONES . .142
  - General Information 142
- HEATING AND VENTILATION 143
  - Manual Climate Controls With A/C 143

Downloaded from www.Manualslib.com manuals search engine

INSTRUMENT PANEL FEATURES

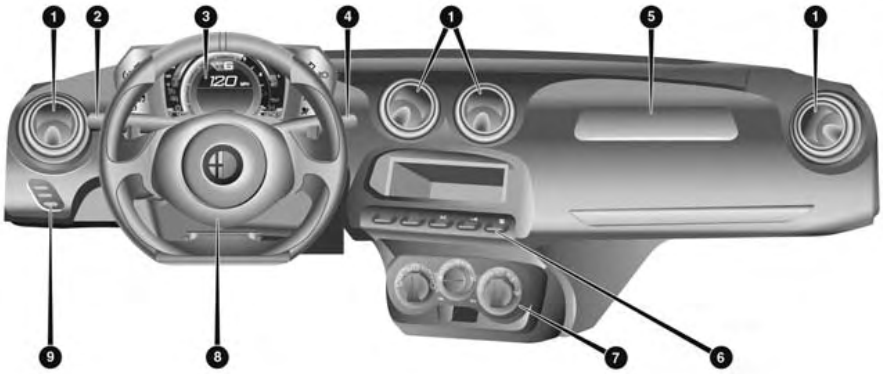

1 — Climate Control Air Outlets
2 — Exterior Light Lever
3 — Instrument Cluster
4 — Washer/Wiper Lever
5 — Passenger Air Bag
6 — Switch Bank (A/C/Door Lock Switch/Door Mirror Demisting)
7 — Climate Controls
8 — Driver Air Bag
9 — EVIC Control Buttons

Downloaded from www.Manualslib.com manuals search engine

INSTRUMENT CLUSTER

Downloaded from www.Manualslib.com manuals search engine

INSTRUMENT CLUSTER DESCRIPTIONS

1. Tire Pressure Monitoring Telltale Light — If Equipped

Each tire, including the spare (if provided), should be checked monthly when cold and inflated to the inflation pressure recommended by the vehicle manufacturer on the vehicle placard or tire inflation pressure label. (If your vehicle has tires of a different size than the size indicated on the vehicle placard or tire inflation pressure label, you should determine the proper tire inflation pressure for those tires.)

As an added safety feature, your vehicle has been equipped with a Tire Pressure Monitoring System (TPMS) that illuminates a low tire pressure telltale when one or more of your tires is significantly under-inflated. Accordingly, when the low tire pressure telltale illuminates, you should stop and check your tires as soon as possible, and inflate them to the proper pressure. Driving on a significantly under-inflated tire causes the tire to overheat and can lead to tire failure. Under-inflation also reduces fuel efficiency and tire tread life, and may affect the vehicle's handling and stopping ability.

Please note that the TPMS is not a substitute for proper tire maintenance, and it is the driver's responsibility to maintain correct tire pressure, even if under-inflation has not reached the level to trigger illumination of the TPMS low tire pressure telltale.

Your vehicle has also been equipped with a TPMS malfunction indicator to indicate when the system is not operating properly. The TPMS malfunction indicator is combined with the low tire pressure telltale. When the system detects a malfunction, the telltale will flash for approximately one minute and then remain continuously illuminated. This sequence will continue upon subsequent vehicle start-ups as long as the malfunction exists. When the malfunction indicator is illuminated, the system may not be able to detect or signal low tire pressure

Downloaded from www.Manualslib.com manuals search engine

as intended. TPMS malfunctions may occur for a variety of reasons, including the installation of replacement or alternate tires or wheels on the vehicle that prevent the TPMS from functioning properly. Always check the TPMS malfunction telltale after replacing one or more tires or wheels on your vehicle, to ensure that the replacement or alternate tires and wheels allow the TPMS to continue to function properly.

WARNING!

The TPMS has been optimized for the original equipment tires and wheels. TPMS pressures and warning have been established for the tire size equipped on your vehicle. Undesirable system operation or sensor damage may result when using replacement equipment that is not of the same size, type, and/or style. Aftermarket wheels can cause

(Continued)

WARNING! *(Continued)*

sensor damage. Do not use tire sealant from a can or balance beads if your vehicle is equipped with a TPMS, as damage to the sensors may result.

2. Turn Signal Indicators

The arrows will flash in unison with the exterior turn signal, when using the turn signal lever.

3. Electronic Stability Control (ESC) OFF Indicator Light

This light indicates the Electronic Stability Control (ESC) is off.

4

Downloaded from www.Manualslib.com manuals search engine

4. Electronic Speed Control Set Indicator Light — If Equipped

This light will turn on when the electronic speed control is set.

5. Temperature Gauge

The temperature gauge shows engine coolant temperature. Any reading within the normal range indicates that the engine cooling system is operating satisfactorily.

The digital gauge will likely indicate a higher temperature when driving in hot weather, or up mountain grades. It should not be allowed to exceed the upper limits of the normal operating range.

NOTE: Driving with a hot engine cooling system could damage your vehicle. The digital warning light may switch on (together with a message on the display) to indicate that the coolant temperature is too high; in this case, stop the engine and contact a dedicated authorized dealership.

WARNING!

A hot engine cooling system is dangerous. You or others could be badly burned by steam or boiling coolant. You may want to call an authorized dealer for service if your vehicle overheats. If you decide to look under the hood yourself, see "Maintaining Your Vehicle." Follow the warnings under the Cooling System Pressure Cap paragraph.

6. Time Display

This area of the cluster displays the time.

Downloaded from www.Manualslib.com manuals search engine

7. Tachometer

This gauge measures engine revolutions per minute (RPM x 1000). Before the pointer reaches the red area, ease up on the accelerator to prevent engine damage.

8. Transmission Gear Status

This area of the cluster displays the current gear selected.

9. Outside Temperature

This area of the cluster displays the outside temperature in degrees Fahrenheit or degrees Celsius.

10. Fuel Gauge

The digital display shows the amount of fuel in the tank.

The switching on of the digital warning light indicates that 1 – 1.3 gallons of fuel are left in the tank; in this situation, refuel as soon as possible.

Do not travel with the fuel tank almost empty; any gaps in fuel delivery could damage the catalytic converter.

11. Park/Headlight ON Indicator

This indicator will illuminate when the park lights or headlights are turned on.

12. High Beam Indicator

This indicator shows that the high beam headlights are on. Push the multifunction lever forward to switch the headlights to high beam, and pull toward yourself (normal position) to return to low beam.

13. Malfunction Indicator Light (MIL)

The Malfunction Indicator Light (MIL) is part of an onboard diagnostic system, called OBD II, that monitors engine and automatic transmission control systems. The light will illuminate when the key is in the ON/RUN position, before engine start. If the bulb

Downloaded from www.Manualslib.com manuals search engine

does not come on when turning the key from OFF to ON/RUN, have the condition checked promptly.

Certain conditions, such as smart fuel door left open, poor fuel quality, etc., may illuminate the MIL after engine start. The vehicle should be serviced if the light stays on through several of your typical driving cycles. In most situations, the vehicle will drive normally and will not require towing.

CAUTION!

Prolonged driving with the Malfunction Indicator Light (MIL) on could cause damage to the engine control system. It also could affect fuel economy and driveability. If the MIL is flashing, severe catalytic converter damage and power loss will soon occur. Immediate service is required.

WARNING!

A malfunctioning catalytic converter, as referenced above, can reach higher temperatures than in normal operating conditions. This can cause a fire if you drive slowly or park over flammable substances such as dry plants, wood, cardboard, etc. This could result in death or serious injury to the driver, occupants or others.

14. Seat Belt Reminder Light

Seat Belt Reminder Light will turn on and remain on until the driver seat belt is buckled. If the driver seat belt is unbuckled once the vehicle speed is over 12.5 mph (20 km/h) or when travelling at a speed from 6 to 12.5 mph (10 to 20 km/h) for few seconds, the Seat Belt Reminder Light and sounding an intermittent chime. Once the sequence starts, it will continue for the entire duration or until the driver's seat

Downloaded from www.Manualslib.com manuals search engine

belt is buckled. After the sequence completes, the Seat Belt Reminder Light remains illuminated until the driver's seat belt is buckled. The driver should instruct all other occupants to buckle their seat belts. Refer to "Occupant Restraints" in "Things To Know Before Starting Your Vehicle" for further information.

15. Air Bag Warning Light

This light will turn on for four to eight seconds as a bulb check when the ignition switch is first turned to ON/RUN. If the light is either not on during starting, stays on, or turns on while driving, have the system inspected at an authorized dealer as soon as possible. Refer to "Occupant Restraints" in "Things To Know Before Starting Your Vehicle" for further information.

16. Passenger Air Bag Warning Light

This light should come and remain on for four to eight seconds as a bulb check when the ignition is first turned to the START or ON/RUN position. If the light stays on, or comes on while driving it may indicate a problem with a passenger air bag system, if the light flickers it may indicate an air bag warning bag failure. Have an authorized dealer service the air bag system immediately.

17. Oil Pressure Warning Light

This telltale indicates low engine oil pressure. If the light turns on while driving, stop the vehicle and shut off the engine as soon as possible. A chime will sound when this light turns on.

Do not operate the vehicle until the cause is corrected. This light does not show how much oil is in the engine. The engine oil level must be checked under the hood.

Downloaded from www.Manualslib.com manuals search engine

18. Fuel Door Reminder

The arrow in this symbol is a reminder that the Fuel Filler Door is located on the right side of the vehicle.

19. Trip Odometer

This area of the cluster displays the total distance traveled since the last Trip reset.

20. Electronic Throttle Control (ETC) Light

This light informs you of a problem with the Electronic Throttle Control (ETC) system. The light will come on when the ignition is first turned ON and remain on briefly as a bulb check. If the light does not come on during starting, have the system checked by an authorized dealer.

If a problem is detected, the light will come on while the engine is running. Cycle the ignition key when the vehicle has completely stopped and the gear selector is placed in the 1st position. The light should turn off.

If the light remains lit with the engine running, your vehicle will usually be drivable. However, see an authorized dealer for service as soon as possible. If the light is flashing when the engine is running, immediate service is required. You may experience reduced performance, an elevated/rough idle or engine stall and your vehicle may require towing.

21. Speedometer

Indicates vehicle speed.

22. "Alfa DNA" Driving Mode Indicator

This area of the cluster displays which driving mode the vehicle is currently in. A letter (d, n, or a) corresponding to the active driving mode (dynamic or race, natural, all weather) and a dedicated message is shown on the display.

Downloaded from www.Manualslib.com manuals search engine

23. Electronic Vehicle Information Center (EVIC) Display

The Electronic Vehicle Information Center (EVIC) features a driver-interactive display that is located in the instrument cluster. For further information, refer to "Electronic Vehicle Information Center (EVIC)" in "Understanding Your Instrument Panel."

EVIC Service Item Display

- Service Warning light – If Equipped

NOTE: The "Scheduled Servicing Plan" includes car maintenance at fixed intervals, refer to the "Maintenance" chapter. This message is displayed automatically along with the warning light when the key is turned to MAR-ON - 1242 miles (2,000 km) before these deadlines and reappears every 124 miles (200 km). Below 124 miles (200 km) servicing indications are more frequent. The indication will appear in miles or kilometers according to the "Unit Of Measurement" settings. When the next scheduled service is approaching and the key is turned to MAR-ON, the word Service will appear on the display, followed by the number of miles or kilometers left. Contact a dedicated Alfa Romeo Dealership. The operations in the "Scheduled Servicing Plan" will be performed and the message will be reset.

Downloaded from www.Manualslib.com manuals search engine

24. Odometer Display

The odometer display shows the total distance the vehicle has been driven.

U.S. Federal regulations require that upon transfer of vehicle ownership, the seller certify to the purchaser the correct mileage that the vehicle has been driven. If your odometer needs to be repaired or serviced, the repair technician should leave the odometer reading the same as it was before the repair or service. If s/he cannot do so, then the odometer must be set at zero, and a sticker must be placed in the door jamb stating what the mileage was before the repair or service. It is a good idea for you to make a record of the odometer reading before the repair/service, so that you can be sure that it is properly reset, or that the door jamb sticker is accurate if the odometer must be reset at zero.

25. Transmission Fault Indicator

This light will illuminate (together with a message in the EVIC and a buzzer) to indicate a transmission fault. Contact your authorized dealer if the message remains after restarting the engine.

26. Door Mirror Defrost Indicator

This indicator will illuminate when the Door Mirror Defrost button on the instrument panel is pushed to the ON position.

27. Electronic Stability Control (ESC) Activation/Malfunction Indicator Light

If the "ESC Activation/Malfunction Indicator Light" comes on continuously with the engine running, a malfunction has been detected in the ESC system. If this light remains on after several ignition cycles, and the vehicle has been driven

Downloaded from www.Manualslib.com manuals search engine

several miles (kilometers) at speeds greater than 30 mph (48 km/h), see your authorized dealer as soon as possible to have the problem diagnosed and corrected.

NOTE:

- Each time the ignition is turned to ON/RUN, the ESC system will be ON, even if it was turned off previously.
- The ESC system will make buzzing or clicking sounds when it is active. This is normal; the sounds will stop when ESC becomes inactive following the maneuver that caused the ESC activation.

28. Brake Warning Light — If Equipped

BRAKE

This light monitors various brake functions, including brake fluid level and parking brake application. If the brake light turns on it may indicate that the parking brake is applied, that the brake fluid level is low, or that there is a problem with the anti-lock brake system reservoir.

If the light remains on when the parking brake has been disengaged, and the fluid level is at the full mark on the master cylinder reservoir, it indicates a possible brake hydraulic system malfunction or that a problem with the Brake Booster has been detected by the Anti-Lock Brake System (ABS) / Electronic Stability Control (ESC) system. In this case, the light will remain on until the condition has been corrected. If the problem is related to the brake booster, the ABS pump will run when applying the brake and a brake pedal pulsation may be felt during each stop.

The dual brake system provides a reserve braking capacity in the event of a failure to a portion of the hydraulic system. A leak in either half of the dual brake system is indicated by the Brake Warning Light, which will turn on when the brake fluid level in the reservoir has dropped below a specified level.

Downloaded from www.Manualslib.com manuals search engine

The light will remain on until the cause is corrected.

NOTE: The light may flash momentarily during sharp cornering maneuvers, which change fluid level conditions. The vehicle should have service performed, and the brake fluid level checked.

If brake failure is indicated, immediate repair is necessary.

WARNING!

Driving a vehicle with the red brake light on is dangerous. Part of the brake system may have failed. It will take longer to stop the vehicle. You could have a collision. Have the vehicle checked immediately.

Vehicles equipped with the Anti-Lock Brake System (ABS), are also equipped with Electronic Brake Force Distribution (EBD). In the event of an EBD failure, the Brake Warning Light will turn on along with the ABS Light. Immediate repair to the ABS system is required.

Operation of the Brake Warning Light can be checked by turning the ignition switch from the OFF position to the ON/RUN position. The light should illuminate for approximately two seconds. The light should then turn off unless the parking brake is applied or a brake fault is detected. If the light does not illuminate, have the light inspected by an authorized dealer.

The light also will turn on when the parking brake is applied with the ignition switch in the ON/RUN position.

NOTE: This light shows only that the parking brake is applied. It does not show the degree of brake application.

Downloaded from www.Manualslib.com manuals search engine

29. Brake Warning Light — If Equipped

This light monitors various brake functions, including brake fluid level and parking brake application. If the brake light turns on it may indicate that the parking brake is applied, that the brake fluid level is low, or that there is a problem with the anti-lock brake system reservoir.

If the light remains on when the parking brake has been disengaged, and the fluid level is at the full mark on the master cylinder reservoir, it indicates a possible brake hydraulic system malfunction or that a problem with the Brake Booster has been detected by the Anti-Lock Brake System (ABS) / Electronic Stability Control (ESC) system. In this case, the light will remain on until the condition has been corrected. If the problem is related to the brake booster, the ABS pump will run when applying the brake and a brake pedal pulsation may be felt during each stop.

The dual brake system provides a reserve braking capacity in the event of a failure to a portion of the hydraulic system. A leak in either half of the dual brake system is indicated by the Brake Warning Light, which will turn on when the brake fluid level in the reservoir has dropped below a specified level.

The light will remain on until the cause is corrected.

NOTE: The light may flash momentarily during sharp cornering maneuvers, which change fluid level conditions. The vehicle should have service performed, and the brake fluid level checked.

If brake failure is indicated, immediate repair is necessary.

Downloaded from www.Manualslib.com manuals search engine

WARNING!

Driving a vehicle with the red brake light on is dangerous. Part of the brake system may have failed. It will take longer to stop the vehicle. You could have a collision. Have the vehicle checked immediately.

Vehicles equipped with the Anti-Lock Brake System (ABS), are also equipped with Electronic Brake Force Distribution (EBD). In the event of an EBD failure, the Brake Warning Light will turn on along with the ABS Light. Immediate repair to the ABS system is required.

Operation of the Brake Warning Light can be checked by turning the ignition switch from the OFF position to the ON/RUN position. The light should illuminate for approximately two seconds. The light should then turn off unless the parking brake is applied or a brake fault is detected. If the light does not illuminate, have the light inspected by an authorized dealer.

The light also will turn on when the parking brake is applied with the ignition switch in the ON/RUN position.

NOTE: This light shows only that the parking brake is applied. It does not show the degree of brake application.

30. Anti-Lock Brake (ABS) Light

This light monitors the Anti-Lock Brake System (ABS). The light will turn on when the ignition switch is turned to the ON/RUN position and may stay on for as long as four seconds.

If the ABS light remains on or turns on while driving, it indicates that the Anti-Lock portion of the brake system is not functioning and that service is required. However, the conventional brake system will continue to operate normally if the BRAKE warning light is not on.

If the ABS light is on, the brake system should be serviced as soon as possible to restore the benefits of Anti-Lock

Downloaded from www.Manualslib.com manuals search engine

brakes. If the ABS light does not turn on when the ignition switch is turned to the ON/RUN position, have the light inspected by an authorized dealer.

ELECTRONIC VEHICLE INFORMATION CENTER (EVIC)

Electronic Vehicle Information Center (EVIC)

The Electronic Vehicle Information Center (EVIC) features a driver-interactive display that is located in the instrument cluster.

The EVIC consists of the following:

- Digital Speedometer
- Vehicle Info
- Fuel Economy Info
- Trip Info
- Screen Setup
- Vehicle Settings

4

Downloaded from www.Manualslib.com manuals search engine

The system allows the driver to select information by pushing the following buttons mounted on the instrument panel to the left of the steering column:

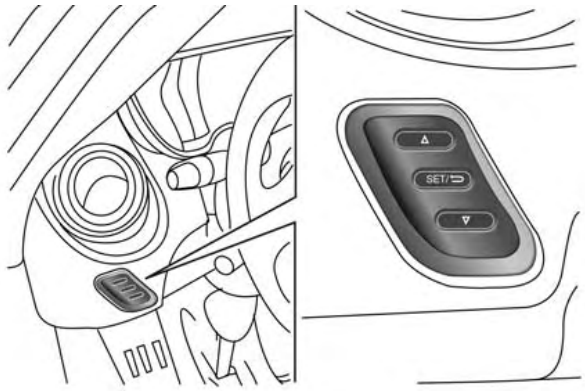

EVIC Control Buttons

- ***UP Arrow Button***

△ Push and release the UP arrow button to scroll upward through the main menu and sub-menus or to increase the displayed value. Outside of the menu, the UP arrow will adjust the brightness of the instrument panel.

- ***DOWN Arrow Button***

▽ Push and release the DOWN arrow button to scroll downward through the main menu and sub-menus or to decrease the displayed value. Outside of the menu, the DOWN arrow will adjust the brightness of the instrument panel.

Downloaded from www.Manualslib.com manuals search engine

- *SET/BACK Arrow Button*

Push and release the SET/BACK arrow button to access/select the information screens or sub-menu screens of a main menu item. Push and hold the SET/BACK arrow button to return to the main menu from an info screen or sub-menu item.

Electronic Vehicle Information Center (EVIC) Setup Menu

The menu comprises a series of functions arranged in a cycle. Push the UP △ and DOWN ▽ buttons to access the different options and settings (setup).

The setup menu can be activated by pushing the **SET/BACK** button. Single push on the UP △ or DOWN ▽ buttons will scroll through the setup menu options. The menu includes the following functions:

- Menu
- Speed Buzzer
- Trip B/Data
- Set Time
- Set Date
- Autoclose
- Units
- Language
- Buzzer Volume
- Service
- Daylights (D.R.L.) – If Equipped
- Exit Menu

Downloaded from www.Manualslib.com manuals search engine

Selecting An Option Of The Main Menu Without Submenu

1. Briefly push the **SET/BACK** button to select the main menu option to set.
2. Push the UP △ or DOWN ▽ button (by a single push) to select the new setting.
3. Briefly push the **SET/BACK** button to store the new setting and go back to the main menu option previously selected.

Selecting An Option Of The Main Menu With Submenu

1. Briefly push the **SET/BACK** button to display the first submenu option.
2. Push the UP △ or DOWN ▽ button (by a single push) to scroll through all the submenu options.
3. Briefly push the **SET/BACK** button to select the displayed submenu option and to open the relevant setup menu.
4. Push the UP △ or DOWN ▽ button (by a single push) to select the new setting for this submenu option.
5. Briefly push the **SET/BACK** button to store the new setting and go back to the previously selected submenu option.
6. Push and hold the **SET/BACK** button to return to the main menu (short hold) or the main screen (longer hold).

Speed Buzzer (Speed Limit)

With this function, it is possible to set the car speed limit (mph or km/h) to immediately alert the driver when the set limit is exceeded.

Downloaded from www.Manualslib.com manuals search engine

To set the speed limit, proceed as follows:

1. Briefly push the **SET/BACK** button. The display will show the message (Speed Buzzer).
2. Push and release the UP △ or DOWN ▽ button to select speed limit activation (On) or deactivation (Off).
3. When the function is activated (On), briefly push the **SET/BACK** button to display the previously set speed. Pushing the UP △ or DOWN ▽ buttons selects the speed limit. Push **SET/BACK** to confirm selection.

NOTE: The setting can be increased or decreased by 5 mph or km/h each time the UP/DOWN button is pushed for speed settings above 20 mph (32 km/h). To increase or decrease the set speed rapidly, push and hold the UP/DOWN button. Save the setting by briefly pushing the button when you approach the required setting.

- Briefly push the **SET/BACK** button to go back to the menu screen, or push and hold the **SET/BACK** button (approximately one second) to go back to the main screen without storing the settings.

To cancel the setting, proceed as follows:

1. Briefly push the **SET/BACK** button. "On" will display.
2. Push and release the DOWN ▽ button. "Off" will display.
3. Briefly push the **SET/BACK** button to go back to the menu screen, or push and hold the **SET/BACK** button (approximately one second) to go back to the main screen without storing the settings.

Trip B Activation

Through this option, it is possible to activate (On) or deactivate (Off) the Trip B (partial trip) display.

For further information see "Trip Computer."

Downloaded from www.Manualslib.com manuals search engine

For activation / deactivation, proceed as follows:

1. Briefly push the **SET/BACK** button. "On" or "Off" will display in the EVIC (according to previous setting).
2. Push and release the UP △ or DOWN ▽ button to select the setting and once selected a beep will occur to signal the setting is saved.
3. Briefly push the **SET/BACK** button to go back to the menu screen, or push and hold the **SET/BACK** button (approximately one second) to go back to the main screen without storing the settings.

Set Time

This function may be used to set the clock through two sub-menu items: "Time" and "Mode."

Proceed as follows:

1. Briefly push the **SET/BACK** button. The display will show the two sub-menu items "Time" and "Mode."
2. Push and release the UP △ or DOWN ▽ button to navigate the two sub-menu items.
3. Select the required option and then prush the **SET/BACK** button.
4. When accessing the "Time" sub-menu item, briefly push the **SET/BACK** button and "hours" will flash on the display.
5. Push and release the UP △ or DOWN ▽ button for setting.
6. Briefly push the **SET/BACK** button and "minutes" will flash on the display.
7. Push and release the UP △ or DOWN ▽ button for setting.

Downloaded from www.Manualslib.com manuals search engine

NOTE:

- The setting will increase or decrease by one unit each time the UP △ or DOWN ▽ button is pushed. Push and hold the button to increase/decrease the setting rapidly. Save the setting by briefly pushing the button when you approach the required setting.
- Briefly push the **SET/BACK** button to return to the "Time" sub-function.
- When accessing the "Mode" submenu, briefly push the **SET/BACK** button. The previously set display format will flash on the display.
- Push and release the UP △ or DOWN ▽ button to select "24h" or "12h."

When you have selected the required settings, briefly push the **SET/BACK** button to go back to the Time, Mode sub-menu screen, or push and hold the **SET/BACK** button (approximately one second) to go back to the main screen without storing the settings.

Set Date

This function may be used to set the date (day - month - year).

To change the date proceed as follows:

1. Briefly push the **SET/BACK** button and "year" will flash on the display.
2. Push and release the UP △ or DOWN ▽ button for setting.
3. Briefly push the **SET/BACK** button and "month" will flash on the display.
4. Push and release the UP △ or DOWN ▽ button for setting.

Downloaded from www.Manualslib.com manuals search engine

5. Briefly push the **SET/BACK** button and "day" will flash on the display.
6. Push and release the UP △ or DOWN ▽ button for setting.

NOTE: The setting will increase or decrease by one unit each time the UP △ or DOWN ▽ button is pushed. Push and hold the UP △ or DOWN ▽ button to increase/decrease the setting rapidly. Save the setting by briefly pushing the button when you approach the required setting.

- Briefly push the **SET/BACK** button to go back to the menu screen, or push and hold the **SET/BACK** button (approximately one second) to go back to the main screen without storing the settings.

Autoclose

With this function active, the doors will automatically lock at when the vehicle's speed exceeds 12 mph (20 km/h).

To change the setting proceed as follows:

1. Briefly push the **SET/BACK** button "On" or "Off" will flash on the display (according to the previous setting).
2. Push and release the UP △ or DOWN ▽ button for setting.
3. Briefly push the **SET/BACK** button to go back to the menu screen, or push and hold the **SET/BACK** button (approximately one second) to go back to the main screen without storing the settings.

Downloaded from www.Manualslib.com manuals search engine

Units (Set Units)

This function may be used to set the measurement unit in three submenus: "Distance," "Temperature" and "Fuel Economy."

To set the required unit, proceed as follows:

1. Briefly push the **SET/BACK** button to display the three sub-menus.
2. Push and release the UP △ or DOWN ▽ button to navigate the three sub-menus.
3. Select the required sub-menu and then briefly push the **SET/BACK** button.
4. When accessing the "Distance" submenu: briefly push the **SET/BACK** button. Either "mi" or "km" will appear on the display (according to the previous setting).
5. Push and release the UP △ or DOWN ▽ button for setting.
6. Briefly push the **SET/BACK** button to return to the sub-menu.
7. When accessing the "Fuel Economy" submenu, briefly push the **SET/BACK** button. Either "mpg," "km/l" or "l/100km" will appear on the display (according to the previous setting).

If the distance unit set is "mi," the fuel economy unit will be displayed in "mpg."

If the distance unit set is "km," the fuel economy unit will be displayed in either km/l or l/100km.

1. Push and release the UP △ or DOWN ▽ button for setting.
2. Briefly push the **SET/BACK** button to return to the sub-menu.

Downloaded from www.Manualslib.com manuals search engine

3. When accessing the "Temperature" submenu: briefly push the **SET/BACK** button. Either "°F" or "°C" will appear on the display (according to the previous setting).
4. Push and release the UP △ or DOWN ▽ button for setting.
5. Briefly push the **SET/BACK** button to return to the sub-menu.

When you have made the required settings, briefly push the **SET/BACK** button to go back to the sub-menu screen, or push and hold the **SET/BACK** button (approximately one second) to go back to the main screen without storing the settings.

Language (Selecting The Language)

The messages can be displayed in the following languages: Italian, English (USA), German, Portuguese, Spanish, French, Chinese, Russian, and Mexican.

To set the required language, proceed as follows:

1. Briefly push the **SET/BACK** button. The previously set "language" will flash on the display.
2. Push and release the UP △ or DOWN ▽ button for setting.
3. Briefly push the **SET/BACK** button to go back to the menu screen, or push and hold the **SET/BACK** button (approximately one second) to go back to the main screen without storing the settings.

Buzzer Volume (Adjusting The Failure/Warning Buzzer Volume)

With this function the volume of the buzzer accompanying any failure/warning indication can be adjusted to one of eight volume levels.

Downloaded from www.Manualslib.com manuals search engine

To adjust the volume proceed as follows:

1. Briefly push the **SET/BACK** button. The previously set volume "level" will flash on the display.
2. Push and release the UP △ or DOWN ▽ button for setting.
3. Briefly push the **SET/BACK** button to go back to the menu screen, or push and hold the **SET/BACK** button (approximately one second) to go back to the main screen without storing the settings.

Service (Scheduled Servicing) — If Equipped

With this function it is possible to view information on mileage intervals for servicing.

To obtain this information, proceed as follows:

Push the **SET/BACK** button briefly. The display shows the service interval in miles (mi) or kilometers (km) according to the previous setting (see the "Unit Of Measurement" paragraph).

Briefly push the **SET/BACK** button to go back to the menu screen or hold the button down to go back to the standard screen.

Downloaded from www.Manualslib.com manuals search engine

NOTE: The "Scheduled Servicing Plan" includes car maintenance at fixed intervals, refer to the "Maintenance" chapter. This message is displayed automatically along with the warning light when the key is turned to MAR-ON - 1242 miles (2,000 km) before these deadlines and reappears every 124 miles (200 km). Below 124 miles (200 km) servicing indications are more frequent. The indication will appear in miles or kilometers according to the "Unit Of Measurement" settings. When the next scheduled service is approaching and the key is turned to MAR-ON, the word Service will appear on the display, followed by the number of miles or kilometers left. Contact a dedicated Alfa Romeo Dealership. The operations in the "Scheduled Servicing Plan" will be performed and the message will be reset.

Day Lights — If Equipped

This function may be used to activate / deactivate the Daytime Running Lamps.

Proceed as follows to switch this function on or off:

1. Briefly push the **SET/BACK** button to display the three submenus.
2. Briefly push the **SET/BACK** button. "On" or "Off" will flash on the display (according to previous setting).
3. Push and release the UP or DOWN button for setting.
4. Briefly push the **SET/BACK** button to go back to the menu screen, or push and hold the button (approximately one second) to go back to the main screen without storing the settings.

Downloaded from www.Manualslib.com manuals search engine

Exit Menu

This function closes the initial menu screen.

Briefly push the **SET/BACK** button to go back to the main screen.

Push and release the △ button to return to the first menu option (Speed Buzzer).

Push and releasethe ▽ button to return to the last menu option (Daylights).

Change Engine Oil Indicator System

Your vehicle is equipped with an engine oil change indicator system. The "Change Engine Oil" message will flash in the EVIC display for approximately 10 seconds and the Oil Pressure Warning Light will illuminate. The "Change Engine Oil" message in the EVIC and the Oil Pressure Warning Light will turn off after approximately 10 seconds.

NOTE: The reset of the Oil Change message must be performed by an authorized dealer.

Trip Computer

The Trip Computer is located in the instrument cluster. It features a driver-interactive display (displays information such as trip information, range, fuel consumption, average speed, and travel time).

Downloaded from www.Manualslib.com manuals search engine

Trip Button

The **TRIP** button, located on the right steering column stalk, can be used to display and to reset the trip values.

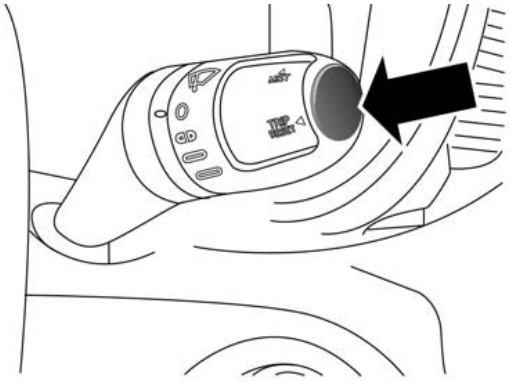

Trip Button

- A short button push displays the different values.
- A long button push resets the system and then starts a new trip.

Trip Functions

Both trip functions are resettable (reset — start of new trip).

"Trip A" can be used to display the figures relating to:

- Range
- Average Fuel Consumption
- Travel Distance
- Current Fuel Consumption
- Average speed
- Travel time

"Trip B" can be used to display the figures relating to:

- Average Fuel Consumption

Downloaded from www.Manualslib.com manuals search engine

- Travel Distance
- Average speed
- Travel time

NOTE: "Trip B" functions may be excluded (see "Trip B Data"). "Range" and "Instantaneous consumption" cannot be reset.

New Trip

To reset:

- Push and hold the **TRIP** button to reset the system manually.
- When the "Trip distance" reaches 9999.9 miles or kilometers or when the "Travel time" reaches 999.59 (999 hours and 59 minutes), the system is reset automatically.
- Disconnecting/Reconnecting the battery resets the system.

NOTE: If the reset operation occurs in the presence of the screens concerning Trip A or Trip B, only the information associated with Trip A or Trip B functions will be reset.

Start Of Trip Procedure

With the ignition on, push and hold the **TRIP** button for over one second to reset.

Exit Trip

To exit the Trip function, wait until all the values have been displayed or hold the **MENU** button for longer than one second.

Briefly push and release the **MENU** button to go back to the menu screen or push and hold the **MENU** (approximately one second) to go back to the main screen without storing settings.

Downloaded from www.Manualslib.com manuals search engine

Values Displayed

Indications On Display

Each time a value is selected, the following information is shown in the EVIC:

- "Trip A" or "Trip B" location(s)
- Name, value and unit of measure of the selected value (e.g. "Range 520 mi").

After a few seconds, the name of the selected value is replaced by the corresponding icon.

Downloaded from www.Manualslib.com manuals search engine

Range

This indicates the distance which may be traveled with the fuel remaining in the tank, assuming that driving conditions will not change. The message "----" will appear on the display in the following cases:

- Distance less than 30 miles (or 50 km).
- The vehicle is parked for a long time with the engine running.

NOTE: The range depends on several factors: driving style, type of route (freeway, residential, mountain roads, etc.), conditions of use of the car (load, tire pressure, etc.). Trip planning must take into account the above notes.

Average Fuel Consumption

This value shows the approximate average consumption since the last reset.

Travel Distance

This value shows the distance covered since the last reset.

Current Fuel Consumption

This indicates the fuel consumption. The value is constantly updated. The message "----" will appear on the display if the car is parked with the engine running.

Average Speed

This value shows the vehicle's average speed as a function of the overall time elapsed since the last reset.

Travel Time

This value shows the time elapsed since the last reset.

Tire Pressure Values

This screen will display OK at each Tire Pressure Monitoring sensor. Refer to "Tire Pressure Monitoring System" in "Starting And Operating."

Downloaded from www.Manualslib.com manuals search engine

RADIO SYSTEM

The radio system consists of:

- Supply cables for radio, speakers and aerial;
- Radio;
- Aerial on front bumper;
- No. 2 tweeter speakers with 38 mm diameter and No. 2 mid-woofer speakers with 130 mm diameter, fitted on the doors.

For further information on radio functions and use, refer to the dedicated Supplement attached to the On-Board Documentation.

RADIO OPERATION AND MOBILE PHONES

Under certain conditions, the mobile phone being on in your vehicle can cause erratic or noisy performance from your radio. This condition may be lessened or eliminated by relocating the mobile phone antenna. This condition is not harmful to the radio. If your radio performance does not satisfactorily "clear" by the repositioning of the antenna, it is recommended that the radio volume be turned down or off during mobile phone operation.

General Information

This device complies with Part 15 of the FCC rules and RSS 210 of Industry Canada. Operation is subject to the following conditions:

- Changes or modifications not expressly approved by the party responsible for compliance could void the user's authority to operate the equipment.
- This device may not cause harmful interference.
- This device must accept any interference received, including interference that may cause undesired operation.

Downloaded from www.Manualslib.com manuals search engine

HEATING AND VENTILATION

Manual Climate Controls With A/C

Heating/Ventilation And Air Conditioning Controls

The Heating/Ventilation And Air Conditioning Controls consist of a series of three rotary dials, a movable cursor and two on/off switches.

1. A/C Button

Press this button to engage the Air Conditioning. A light will illuminate when the Air Conditioning system is engaged.

MAX A/C

For maximum cooling, use the A/C and recirculation modes at the same time.

ECONOMY MODE

If economy mode is desired, press the A/C switch to turn OFF the A/C compressor. Then, rotate the temperature control to the desired temperature.

2. Demist/Defrost Control

Press and release the Demist/Defrost Control button to turn ON the heated outside mirrors. The Demist/Defrost feature automatically turns OFF after 20 minutes.

Downloaded from www.Manualslib.com manuals search engine

3. Mode Control

Rotate this control to change the system between Modes (Panel, Bi-Level, Floor, Mix, Defrost).

Panel – Air is directed through the outlets in the instrument panel. These outlets can be adjusted to direct airflow.

Bi-Level – Air is directed through the panel and floor outlets.

Floor – Air is directed through the floor outlets with a small amount flowing through the defrost and side window demister outlets.

Mix – Air is directed through the floor, defrost, and side window demister outlets. This setting works best in cold or snowy conditions that require extra heat to the windshield. This setting is good for maintaining comfort while reducing moisture on the windshield.

4. Recirculation Control

Slide cursor to change the system between recirculation mode and outside air mode. Recirculation can be used when outside conditions such as smoke, odors, dust, or high humidity are present.

Downloaded from www.Manualslib.com manuals search engine

NOTE:

- Continuous use of the Recirculation mode may make the inside air stuffy and window fogging may occur. Extended use of this mode is not recommended.
- The use of the Recirculation mode in cold or damp weather could cause windows to fog on the inside, because of moisture buildup inside the vehicle. Select the outside air position for maximum defogging.

5. Temperature Control

Rotate this control to regulate the temperature of the air inside the passenger compartment. Rotating the dial counterclockwise into the blue area of the scale indicates cooler temperatures, while rotating clockwise into the red area indicates warmer temperatures.

6. Blower Control

Rotate this control to regulate the amount of air forced through the ventilation system in any mode. The blower speed increases as you move the control clockwise from the "0" (OFF) position. There are four blower speeds.

Heating

To heat the passenger compartment, proceed as follows:

1. Rotate the Temperature Control to the red section.
2. Turn the Blower Control to the desired speed.
3. Turn the Mode Control to .
4. Then operate the controls to maintain the desired comfort conditions.

NOTE:

- This air distribution allows the passenger compartment to be heated quickly.
- When the engine is cold, it takes a few minutes to achieve optimum passenger compartment heating.

Downloaded from www.Manualslib.com manuals search engine

Fast Demisting/Defrosting Of Windshield And Side Windows

Proceed as follows:

1. Rotate the Temperature Control to the red section.
2. Turn the Blower Control to 4 (maximum fan speed).
3. Turn the Mode Control to .
4. Move the Recirculation Control to .

After demisting/defrosting, operate the controls as normal to restore the required comfort conditions.

NOTE: The climate control system is very useful for speeding up and maintaining demisting since it dehumidifies the air. Adjust the controls as described previously and switch on the climate control system by pressing the A/C button.

Window Demisting

In the event of considerable external moisture and/or rain and/or large differences in temperature inside and outside the passenger compartment, perform the following preventive window demisting procedure:

1. Move the Recirculation Control to .
2. Rotate the Temperature Control to the red section.
3. Turn the Blower Control to 2 (intermediate fan speed).
4. Turn the Mode Control to with the possibility of moving it to position if window misting does not occur.

Downloaded from www.Manualslib.com manuals search engine

Ventilation

To ventilate the passenger compartment properly, proceed as follows:

1. Fully open the vents and direct them appropriately.
2. Rotate the Temperature Control to the blue section.
3. Move the Recirculation Control to .
4. Turn the Blower Control to the desired speed.
5. Turn the Mode Control to .

Internal Air Recirculation Activation

- Move the Recirculation Control to .

It is advisable to switch the internal air recirculation on while standing in queues or in tunnels to prevent the introduction of polluted air.

Do not use the function for a long time, particularly if there are two people on board, to prevent the windows from misting.

NOTE: The internal air recirculation system makes it possible to reach the required heating or ventilation conditions more quickly. Do not use the internal air recirculation function on rainy/cold days to avoid the possibility of the windows misting.

Climate Control

Proceed as follows:

1. Rotate the Temperature Control to the blue section.
2. Turn the Blower Control to 1 (1st fan speed). For rapid cooling, turn Blower Control to 4 (maximum fan speed).
3. Move the Recirculation Control to .
4. Turn the Mode Control to .
5. Press the A/C button.

Downloaded from www.Manualslib.com manuals search engine

Cooling Adjustment

Proceed as follows:

1. Move the Recirculation Control to .
2. Rotate the Temperature Control towards the red section to increase the temperature.
3. Turn the Blower Control counterclockwise to reduce the fan speed.

Door Mirror Demisting

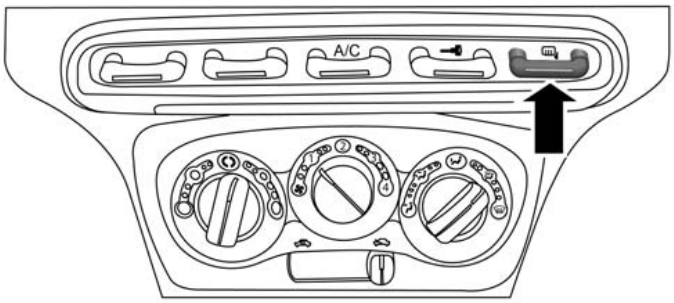

Demist/Defrost Button

- Press the button to activate this function.
- Press the button again to deactivate the function.

Activation is indicated by the digital warning light on the display.

Downloaded from www.Manualslib.com manuals search engine

System Maintenance

In winter, the climate control system must be turned on at least once a month for about 10 minutes. Have the system inspected at an authorized dealer before the summer.

NOTE: The system uses R-1234yf and R134a coolant which does not pollute the environment in the event of accidental leakage. Under no circumstances should you use R-134a fluid which, in addition to being incompatible with the system's components, contributes greatly to the greenhouse effect.

Downloaded from www.Manualslib.com manuals search engine

Downloaded from www.Manualslib.com manuals search engine

STARTING AND OPERATING

CONTENTS

■ STARTING PROCEDURES 154
- □ Automatic Transmission 154
- □ Normal Starting. 155
- □ Cold Weather Operation 155
- □ If Engine Fails To Start 155
- □ After Starting 156
- □ Turbo Charger “Cool Down” 156

■ SIX-SPEED ALFA TWIN CLUTCH TRANSMISSION 156
- □ Using The Transmission 157

■ ALFA DNA SYSTEM (DYNAMIC CAR CONTROL SYSTEM) 163
- □ Driving Modes 164
- □ System Failure. 168
- □ Launch Control 168

■ DRIVING ON SLIPPERY SURFACES 169
- □ Acceleration 169
- □ Traction 170

■ DRIVING THROUGH WATER 170
- □ Flowing/Rising Water 170

Downloaded from www.Manualslib.com manuals search engine

- Shallow Standing Water 171

■ PARKING BRAKE 172

■ BRAKE SYSTEM 174

■ ESC (ELECTRONIC STABILITY CONTROL) SYSTEM 175

- System Activation 176
- System Intervention 177
- Electronic Brake Distribution System (EBD) . . .177
- Four-Wheel Anti-Lock Brake System (ABS) . . .177
- Cornering Brake Control System (CBC) 179
- Drag Torque Control System (DTC) 179
- AntiSlip Regulation System (ASR) 179
- Hill Start Assist (HSA) 181
- Hydraulic Brake Assistant System (HBA) 182
- Electronic Q2 System (E-Q2) 183
- Ready Alert Brake System (RAB) 183

■ TIRE SAFETY INFORMATION 183

- Tire Markings 183
- Tire Identification Number (TIN). 187
- Tire Terminology And Definitions 189
- Tire Loading And Tire Pressure 190

■ TIRES — GENERAL INFORMATION 195

- Tire Pressure 195
- Tire Inflation Pressures 196
- Tire Pressures For High Speed Operation 198
- Radial Ply Tires 198

Downloaded from www.Manualslib.com manuals search engine

- Tire Types 199
- Run Flat Tires — If Equipped 201
- Spare Tires — If Equipped 201
- Tire Spinning 204
- Tread Wear Indicators 204
- Life Of Tire 205
- Replacement Tires 206

■ TIRE CHAINS (TRACTION DEVICES) 207

■ TIRE ROTATION RECOMMENDATIONS 208

■ TIRE PRESSURE MONITORING SYSTEM (TPMS) 209
- Base System 211
- General Information 214

■ FUEL REQUIREMENTS — 1.750 Turbo 214
- Reformulated Gasoline 215
- Gasoline/Oxygenate Blends 215
- MMT In Gasoline 215
- Materials Added To Fuel 216
- Fuel System Cautions. 216
- Carbon Monoxide Warnings 217

■ ADDING FUEL/SMART FUEL 218

■ TRAILER TOWING 221

■ RECREATIONAL TOWING (BEHIND MOTORHOME, ETC.) 221
- Towing This Vehicle Behind Another Vehicle . .221

Downloaded from www.Manualslib.com manuals search engine

STARTING PROCEDURES

Before starting your vehicle, adjust your seat, adjust both inside and outside mirrors, and fasten your seat belts.

WARNING!

- **Never leave children alone in a vehicle, or with access to an unlocked vehicle.**
- **Allowing children to be in a vehicle unattended is dangerous for a number of reasons. A child or others could be seriously or fatally injured. Children should be warned not to touch the parking brake, brake pedal or the transmission gear selector.**
- **Do not leave the Key Fob in or near the vehicle (or in a location accessible to children). A child could operate power windows, other controls, or move the vehicle.**

Automatic Transmission

To start the engine press the brake pedal: the system engages NEUTRAL (N) automatically.

After the starting procedure, FIRST (1st) gear or REVERSE (R) can be engaged.

Irrespective of the mode selected (AUTO/MANUAL), to engage FIRST (1st) gear or REVERSE (R), it is necessary to press the brake pedal and press the 1 button on the transmission control panel (or the "+" steering wheel stalk) to engage FIRST (1st) gear or the R button to engage REVERSE (R).

When FIRST (1st) gear is engaged, the system sets itself to AUTO mode.

NEUTRAL (N) can be engaged again by pressing the N button with the brake pedal pressed.

Downloaded from www.Manualslib.com manuals search engine

When the 1, N or R buttons are pressed (or ″+″ steering wheel stalk is operated) without pressing the brake pedal, no gear change request is implemented by the system.

NOTE: REVERSE (R) cannot be engaged by pressing the ″-″ stalk on the steering wheel.

Normal Starting

NOTE: Normal starting of either a cold or a warm engine is obtained without pumping or pressing the accelerator pedal.

Turn the ignition switch to the AVV/ACC (START) position and release it when the engine starts. If the engine fails to start within 10 seconds, turn the ignition switch to the STOP (OFF/LOCK) position, wait 10 to 15 seconds, then repeat the "Normal Starting" procedure.

Cold Weather Operation

Your engine is designed to operate at temperatures as low as 0°F (-18°C).

NOTE: Use of the recommended SAE 5W-40 Synthetic oil and adhering to the prescribed oil change intervals is important to prevent engine damage and ensure satisfactory starting in cold conditions.

If Engine Fails To Start

WARNING!

Never pour fuel or other flammable liquids into the throttle body air inlet opening in an attempt to start the vehicle. This could result in a flash fire causing serious personal injury.

Downloaded from www.Manualslib.com manuals search engine

CAUTION!

- **Do not attempt to push or tow your vehicle to get it started. Vehicles equipped with a Alfa Twin Clutch Transmission cannot be started this way. Unburned fuel could enter the catalytic converter and once the engine has started, ignite and damage the converter and vehicle.**
- **To prevent damage to the starter, do not continuously crank the engine for more than 15 seconds at a time. Wait 10 to 15 seconds before trying again.**

After Starting

The idle speed is controlled automatically and it will decrease as the engine warms up.

Turbo Charger "Cool Down"

This vehicle is equipped with an after-run pump to cool the turbocharger after the engine is shut off. Depending on the type of driving and the amount of cargo, the pump will run for up to five minutes after the engine has been shut off to circulate coolant through the turbocharger.

Although the pump is rubber-mounted for quiet operation, it is normal to hear it running during this time.

SIX-SPEED ALFA TWIN CLUTCH TRANSMISSION

WARNING!

- **It is dangerous to shift out of NEUTRAL if the engine speed is higher than idle speed. If your foot is not firmly pressing the brake pedal, the vehicle could accelerate quickly forward or in reverse. You could lose control of the vehicle and hit someone or something. Only shift into gear when the engine is idling normally and your foot is firmly pressing the brake pedal.**

(Continued)

Downloaded from www.Manualslib.com manuals search engine

WARNING! ***(Continued)***

- **Unintended movement of a vehicle could injure those in or near the vehicle. As with all vehicles, you should never exit a vehicle while the engine is running. Before exiting the vehicle, always apply the parking brake, shift the transmission into gear, turn the engine OFF, and remove the ignition key.**
- **When leaving the vehicle, always remove the ignition key and lock your vehicle.**
- **Never leave children alone in a vehicle, or with access to an unlocked vehicle. Allowing children to be in a vehicle unattended is dangerous for a number of reasons. A child or others could be seriously or fatally injured. Children should be warned not to touch the parking brake, brake pedal or the transmission gear selector.**

(Continued)

WARNING! ***(Continued)***

- **Do not leave the ignition key in or near the vehicle (or in a location accessible to children). A child could operate power windows, other controls, or move the vehicle.**

Using The Transmission

This vehicle is equipped with a Six-Speed Alfa Twin Clutch transmission with steering wheel mounted shift paddles.

When the ignition is in the OFF position, the transmission controls (shift paddles on the steering wheel, and gear selector buttons on the center console) are disabled.

When the key is turned to the ON position, the current transmission gear will be displayed in the instrument cluster, along with the "AUTO" indicator. This indicates the transmission is in Automatic mode.

Downloaded from www.Manualslib.com manuals search engine

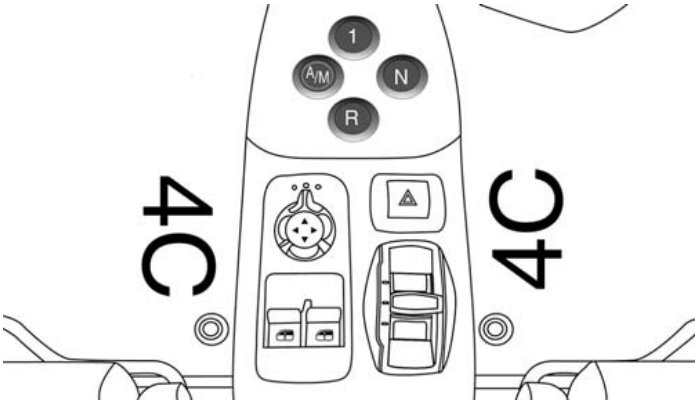

Transmission Gear Selector

Operating Modes

The transmission has two normal operating modes (except when the "Race" mode is selected on the DNA switch):

MANUAL mode in which the driver must shift gears manually (using the steering wheel mounted shift paddles).

Automatic (AUTO) mode, in which the system shifts between all forward gears automatically.

When the "Race" mode is selected via the DNA selector, the only allowed transmission operating mode is MANUAL.

MANUAL Mode

In this operating mode, the driver is responsible for choosing the best gear to engage, depending on the car operating conditions. The current gear is displayed in the instrument cluster.

To activate/deactivate MANUAL mode, press the A/M button on the center console when the transmission is in any forward gear.

Downloaded from www.Manualslib.com manuals search engine

Use the "+" shift paddle to engage a higher gear, or the "–" paddle to engage a lower gear.

If a requested gear shift is not allowed (typically, because it would cause engine overspeed or lugging), an audible signal will sound and the transmission will remain in the existing gear.

The transmission will automatically downshift during closed-throttle decelerations, to prevent engine lugging. When coming to a stop, the transmission will automatically select FIRST (1st) gear. The driver must manually upshift the transmission (by tapping the + shift paddle) as the vehicle accelerates.

NOTE: To provide better comfort, the transmission will up-shift to the next available gear if the engine speed limit is reached. This feature is only available in NATURAL and ALL WEATHER Modes.

AUTO Mode

In AUTO mode the transmission shifts gears automatically depending on vehicle speed, engine RPM, and accelerator pedal position.

AUTO is the default operating mode at startup. When in AUTO mode, "AUTO" appears in the instrument cluster, adjacent to the current gear display.

To toggle between AUTO and MANUAL modes, press the A/M button on the center console.

Accelerating From A Stop

FIRST (1st) and REVERSE (R) can only be engaged (at a stop) by pressing "1" or "R" when the brake pedal is pressed.

To drive, press the brake pedal, and select 1 (One) or R (Reverse) by pressing "1" or "R" using the transmission gear selector buttons on the center console. Then release the brake pedal and smoothly press the accelerator pedal.

Downloaded from www.Manualslib.com manuals search engine

NOTE: When starting on a fairly steep incline, it may be advisable to engage the parking brake.

The vehicle can only be launched (from a stop) in FIRST (1st) or REVERSE (R). SECOND (2nd) gear (or higher) cannot be engaged when the vehicle is stationary.

FIRST (1st) and REVERSE (R) gears can only be engaged at vehicle speeds below 2 mph (3 km/h). At speeds below 6 mph (10 km/h), attempts to shift from 1st to R (or R to 1st) will only be allowed if the vehicle speed drops below the 2 mph (3 km/h) threshold within three seconds of the request; otherwise, the transmission will shift to NEUTRAL (N). The driver should then repeat the request for 1st or R once the vehicle has come to a stop.

Shift Paddles

In MANUAL mode, the steering wheel mounted shift paddles (labeled + and -) control the transmission shifting.

Tapping the (+) paddle will upshift the transmission to the next higher gear, while tapping the (-) paddle will downshift to the next lower gear. The current gear is displayed in the instrument cluster. If a requested shift would cause engine lugging or overspeed, that request will be ignored.

In AUTO mode, tapping a shift paddle will temporarily place the transmission in MANUAL mode, and execute the requested upshift or downshift (if allowable). The transmission will then return to AUTO mode after a brief interval. Pressing a shift paddle will only shift the transmission one gear at a time. Holding a paddle depressed will not command multiple shifts; the paddle must be pressed multiple times in succession to generate multiple shifts.

If the brake pedal is not depressed (and the car is stationary for a period of time), the transmission will automatically engage NEUTRAL (N).

Downloaded from www.Manualslib.com manuals search engine

Neutral (N)

Use this range when the vehicle is standing for prolonged periods with the engine running. Always apply the parking brake if you must leave the vehicle.

At engine startup, the transmission will automatically select NEUTRAL (N) and AUTO mode. The brake pedal must be pressed when starting the engine.

To select NEUTRAL (N) when the vehicle is stationary, turn the ignition key to the MAR-ON position (engine running or not), press the brake pedal, and press the N button on the transmission gear selector.

When the vehicle is moving (with ignition ON), pressing the NEUTRAL (N) button will engage N, regardless of whether the brake pedal is pressed.

WARNING!

Do not coast in NEUTRAL and never turn off the ignition to coast down a hill. These are unsafe practices that limit your response to changing traffic or road conditions. You might lose control of the vehicle and have a collision.

With car in motion, to engage a gear from the NEUTRAL (N) position, press the 1 button on the transmission control panel (it is not necessary to press the brake pedal) the transmission will immediately engage the correct gear according to the car's speed.

Downloaded from www.Manualslib.com manuals search engine

If the vehicle is stationary with the engine running and FIRST (1st) gear or REVERSE (R) engaged, the system activates an acoustic signal and automatically places the transmission in NEUTRAL (N) when:

The accelerator and/or brake pedal are not operated for at least three minutes.

The brake pedal is pressed for longer than 10 minutes.

The driver's door is opened and the accelerator pedal or the brake pedal are not operated for at least one and a half seconds.

A fault has been detected in the transmission.

Parking The Vehicle

When parking and leaving the car, proceed as follows:

1. Press the brake pedal and shift the transmission into First (1st).
2. Stop the engine and firmly engage the parking brake.
3. Release the brake pedal.

When parking on an incline, turn the front wheels toward the curb on a downhill slope and away from the curb on an uphill slope. Always chock the wheels when parking on steep grades.

General Notes

When the vehicle is stopped and in gear, always keep the brake pedal pressed until you decide to set off, then release the brake and accelerate gradually.

During prolonged stops with the engine running, it is advisable to keep the transmission in NEUTRAL (N).

When stopped on an incline, always hold the vehicle in place using the brakes. On steep inclines, Hill Start Assist (HSA) will temporarily hold the car in position when the brake pedal is released. If the accelerator pedal is not

Downloaded from www.Manualslib.com manuals search engine

applied after a short time, the car will roll back. Either reapply the brake (to hold the vehicle) or press the accelerator to climb the hill.

Only shift between FIRST (1st) and REVERSE (R) when completely stopped, with the brake pedal pressed.

When necessary, it is possible to engage FIRST (1st), REVERSE (R) or NEUTRAL (N) with the engine off, the key at MAR-ON and the brake pressed. In this case, wait at least five seconds between one gear change and the next, in order to safeguard the operation of the hydraulic system, and the pump in particular.

For uphill departures, it is advisable to accelerate gradually but fully immediately after releasing the parking brake or the brake pedal; this allows the engine to temporarily increase the number of revs and tackle the steepest gradients with more torque at the wheels.

ALFA DNA SYSTEM (DYNAMIC CAR CONTROL SYSTEM)

This vehicle is equipped with a "Alfa DNA" system lever (located on the center console). There are four modes of operation to be selected according to driving style and road conditions:

Dynamic (This mode alters the transmission's automatic shift schedule for sportier driving [D]).

Natural (mode for driving in normal conditions [N]).

All Weather (mode for driving in poor grip conditions, such as rain and snow [A]).

Race (sports driving mode [D]).

Downloaded from www.Manualslib.com manuals search engine

This also acts on the dynamic car control systems (engine, gearbox/transmission, ESC system).

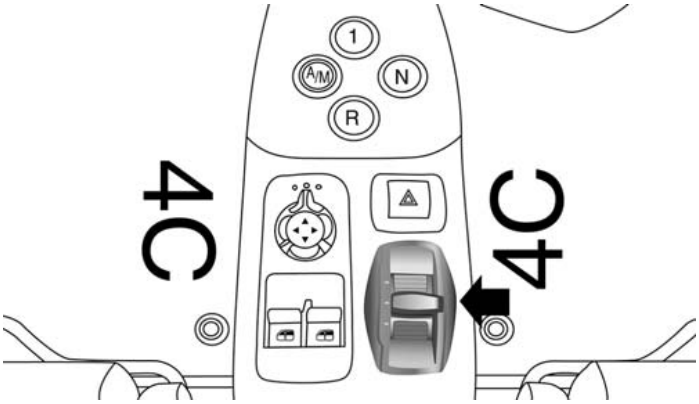

Alfa DNA Mode Selector

Driving Modes

The Alfa DNA system lever will always return to the center position after use.

The selected driving mode is indicated by the corresponding LED switching in the panel and by an indication on the display.

Dynamic Mode

Activation

Move the Alfa DNA system lever upwards (to the letter "D") and hold in this position for half a second, until the corresponding LED lights up and the Dynamic mode activation indicator appears on the display.

When Dynamic mode is activated, the turbocharger pressure and engine oil temperature screen is displayed automatically. When released, the Alfa DNA system lever will return to the central position.

NOTE: Dynamic Mode will be inhibited until the vehicle has accumulated 155 miles (250 km).

Downloaded from www.Manualslib.com manuals search engine

Electronic Stability Control (ESC) and Anti-Slip Regulation (ASR) systems:

The ESC and ASR system ensures more enjoyable, sportier driving while guaranteeing the stability of the car.

Electronic Q2 system:

The system increases vehicle stability while accelerating on bends, improving the agility of the car.

Engine And Gearbox/Transmission:

The system adjusts the transmission shift calibration for sportier shifting.

NOTE: In Dynamic mode, the engine response to the accelerator pedal position increases considerably. Consequently, driving is less fluid and comfortable.

Deactivation

To deactivate Dynamic mode and return to Natural, move lever downwards (to letter "A") and keep it in this position for half a second.

The LED corresponding to Natural mode will light up and the Natural mode activation indication will appear on the display.

Race Mode

Activation

Move the Alfa DNA system lever upwards (to the letter "D") and hold in this position for five seconds, until the Race mode activation indicator appears on the display.

When Race mode is activated, the longitudinal/lateral accelerometer indicator screen (G-meter information) is displayed automatically. This considers gravitational acceleration (G).

Downloaded from www.Manualslib.com manuals search engine

Electronic Stability Control (ESC) and Anti-Slip Regulation (ASR) systems:

These systems are deactivated in order to ensure the fullest sensation of sport, leaving the driver in full control of the vehicle. When the vehicle is in unstable conditions, the ESC reactivates automatically when the brake pedal is pressed until the ABS intervenes, thus returning the vehicle to stable conditions. To deactivate the ESC and ASR systems reactivate Race mode.

Electronic Q2 system:

The system increases vehicle stability while accelerating on bends, improving the agility of the car.

Engine And Gearbox/Transmission:

The system adjusts the transmission shift calibration for sportier shifting.

NOTE: In Race mode, the sensitivity of the accelerator pedal increases considerably. Consequently, driving is less fluid and comfortable.

In Race mode the transmission only works in MANUAL mode. Refer to the ″Manual Operation″ in ″Starting and Operating″ for further information.

Deactivation

To deactivate Race mode and return to Dynamic mode, move the Alfa DNA system lever downwards (to letter “A”) and keep it in this position for half a second.

The LED corresponding to Dynamic mode will light up and the Dynamic mode activation indication will appear on the display.

Downloaded from www.Manualslib.com manuals search engine

Natural Mode

Electronic Stability Control (ESC) and Anti-Slip Regulation (ASR) systems:

ESC and ASR system thresholds are aimed at providing comfort and safety in normal grip and driving conditions.

Electronic Q2 system:

The system is calibrated to ensure the best driving comfort.

Engine And Gearbox/Transmission:

Standard response shifting.

All Weather Mode

Activation

Move the Alfa DNA system lever downwards (to the letter "A") and hold in this position for half a second, until the corresponding LED lights up and the All Weather mode activation indicator appears on the display.

Electronic Stability Control (ESC) and Anti-Slip Regulation (ASR) systems:

ESC and ASR system thresholds are aimed at ensuring maximum safety in low-grip driving conditions. It is advisable to select All Weather mode in the presence of low-grip road surfaces.

Electronic Q2 System:

The system is deactivated.

Engine And Gearbox/Transmission:

Standard response shifting.

Downloaded from www.Manualslib.com manuals search engine

Deactivation

To deactivate All Weather mode and return to Natural mode, move the Alfa DNA system lever upwards (to letter "D") and keep it in this position for half a second.

NOTE:

When the engine is next started, All weather mode or Natural mode will be retained when the car is restarted.

When the engine is next started, Race mode or Dynamic mode previously selected is not retained. The system will reactivate in Natural mode.

It is not possible to go directly from Dynamic mode to All Weather mode and vice versa. You must always first go back to Natural mode and then select the other mode.

System Failure

In the event of system failure or a fault with the gear selector, no driving modes can be selected.

The display will become grey (same screen as ″Natural″ mode) but without an indication of the Alfa DNA setting. The display will also show a warning message.

Please contact your authorized dealer for service.

Launch Control

The Launch Control strategy permits high-performance acceleration.

This strategy can be activated with vehicle at a standstill, Race mode selected and FIRST (1st) gear engaged.

The sequence of operations to perform is as follows:

1. Press the brake pedal and hold it down.
2. Press the accelerator pedal and hold it down.
3. Press the ″–″ paddle behind the steering wheel.

When the brake pedal is released, the car will start with maximum acceleration. Despite the MANUAL mode, the

Downloaded from www.Manualslib.com manuals search engine

vehicle will automatically shift the gear to guarantee maximum acceleration, once the correct shifting speed has been reached.

WARNING!

Launch Control is intended for off-highway or off-road use only and should not be used on any public roadways. Use Launch Control only in a controlled and dry track environment; within the limits of the law. Actual Launch Control performance may change depending on the surface and current traction conditions. The capabilities of the vehicle as measured by the performance pages must never be exploited in a reckless or dangerous manner, which can jeopardize the user's safety or the safety of others. Only a safe, attentive, and skillful driver can prevent accidents. Failure to follow this warning may result in serious injury or death.

To discontinue the strategy, simply interrupt the above sequence of operations or release the accelerator pedal.

DRIVING ON SLIPPERY SURFACES

Acceleration

Rapid acceleration on snow covered, wet, or other slippery surfaces may cause the driving wheels to pull erratically to the right or left. This phenomenon occurs when there is a difference in the surface traction under the rear (driving) wheels.

WARNING!

Rapid acceleration on slippery surfaces is dangerous. Unequal traction can cause sudden pulling of the rear wheels. You could lose control of the vehicle and possibly have a collision. Accelerate slowly and carefully whenever there is likely to be poor traction (ice, snow, wet mud, loose sand, etc.).

Downloaded from www.Manualslib.com manuals search engine

Traction

When driving on wet or slushy roads, it is possible for a wedge of water to build up between the tire and road surface. This is known as hydroplaning and may cause partial or complete loss of vehicle control and stopping ability. To reduce this possibility, the following precautions should be observed:

- Slow down during rainstorms or when the roads are slushy.
- Slow down if the road has standing water or puddles.
- Replace tires when tread wear indicators first become visible.
- Keep tires properly inflated.
- Maintain sufficient distance between your vehicle and the vehicle in front of you to avoid a collision in a sudden stop.

Your vehicle may be equipped with a Limited Slip Differential (LSD) that reduces, but does not eliminate, the amount of wheel slip across a given axle for improved handling.

DRIVING THROUGH WATER

Driving through water more than a few inches/centimeters deep will require extra caution to ensure safety and prevent damage to your vehicle.

Flowing/Rising Water

WARNING!

Do not drive on or across a road or path where water is flowing and/or rising (as in storm run-off). Flowing water can wear away the road or path's surface and cause your vehicle to sink into deeper water. Furthermore, flowing and/or rising water can carry

(Continued)

Downloaded from www.Manualslib.com manuals search engine

WARNING! *(Continued)*

your vehicle away swiftly. Failure to follow this warning may result in injuries that are serious or fatal to you, your passengers, and others around you.

Shallow Standing Water

Although your vehicle is capable of driving through shallow standing water, consider the following Cautions and Warnings before doing so.

WARNING!

- **Driving through standing water limits your vehicle's traction capabilities. Do not exceed 5 mph (8 km/h) when driving through standing water.**
- **Driving through standing water limits your vehicle's braking capabilities, which increases stopping**

(Continued)

WARNING! *(Continued)*

distances. Therefore, after driving through standing water, drive slowly and lightly press on the brake pedal several times to dry the brakes.

- **Failure to follow these warnings may result in injuries that are serious or fatal to you, your passengers, and others around you.**

CAUTION!

- **Always check the depth of the standing water before driving through it. Never drive through standing water that is deeper than the bottom of the tire rims mounted on the vehicle.**
- **Determine the condition of the road or the path that is under water and if there are any obstacles in the way before driving through the standing water.**

(Continued)

Downloaded from www.Manualslib.com manuals search engine

CAUTION! ***(Continued)***

- **Do not exceed 5 mph (8 km/h) when driving through standing water. This will minimize wave effects.**
- **Driving through standing water may cause damage to your vehicle's drivetrain components. Always inspect your vehicle's fluids (i.e., engine oil, transmission, axle, etc.) for signs of contamination (i.e., fluid that is milky or foamy in appearance) after driving through standing water. Do not continue to operate the vehicle if any fluid appears contaminated, as this may result in further damage. Such damage is not covered by the New Vehicle Limited Warranty.**
- **Getting water inside your vehicle's engine can cause it to lock up and stall out, and cause serious internal damage to the engine. Such damage is not covered by the New Vehicle Limited Warranty.**

PARKING BRAKE

Before leaving the vehicle, make sure that the parking brake is fully applied. Also, be certain to leave manual transmission in REVERSE (R) or FIRST (1st) gear.

The parking brake lever is located in the central tunnel. To apply the parking brake, pull the parking brake lever up as firmly as possible. To release the parking brake, pull the parking brake lever up slightly, press the center button, then lower the parking brake lever completely.

Downloaded from www.Manualslib.com manuals search engine

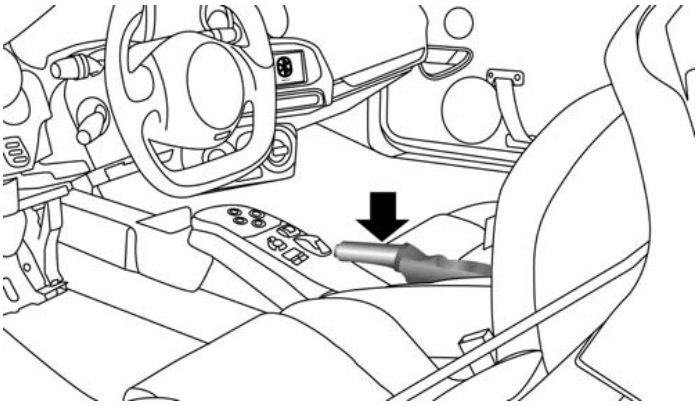

Parking Brake Lever

When the parking brake is applied with the ignition switch in the MAR (ACC/ON/RUN) position, the Brake Warning Light in the instrument cluster will illuminate.

When parking on a hill, it is important to turn the front wheels toward the curb on a downhill grade and away from the curb on an uphill grade. The parking brake should always be applied whenever the driver is not in the vehicle.

WARNING!

- **Never leave children alone in a vehicle, or with access to an unlocked vehicle.**
- **Allowing children to be in a vehicle unattended is dangerous for a number of reasons. A child or others could be seriously or fatally injured. Children should be warned not to touch the parking brake, brake pedal or the transmission gear selector.**
- **Do not leave the Key Fob in or near the vehicle or in a location accessible to children. A child could operate power windows, other controls, or move the vehicle.**

(Continued)

Downloaded from www.Manualslib.com manuals search engine

WARNING! ***(Continued)***

- **Be sure the parking brake is fully disengaged before driving; failure to do so can lead to brake failure and a collision.**
- **Always fully apply the parking brake when leaving your vehicle, or it may roll and cause damage or injury. Also be certain to leave a manual transmission in REVERSE or FIRST (1st) gear. Failure to do so may allow the vehicle to roll and cause damage or injury.**

CAUTION!

If the Brake Warning Light remains on with the parking brake released, a brake system malfunction is indicated. Have the brake system serviced by an authorized dealer immediately.

BRAKE SYSTEM

Your vehicle is equipped with dual hydraulic brake systems. If either of the two hydraulic systems loses normal capability, the remaining system will still function. However, there will be some loss of overall braking effectiveness. You may notice increased pedal travel during application, greater pedal force required to slow or stop, and potential activation of the "Brake System Warning Light."

In the event power assist is lost for any reason (i.e., repeated brake applications with the engine off) the brakes will still function. However, the effort required to brake the vehicle will be much greater than that required with the power system operating.

Downloaded from www.Manualslib.com manuals search engine

ESC (ELECTRONIC STABILITY CONTROL) SYSTEM

The ESC system improves the directional control and stability of the vehicle in various driving conditions.

The ESC system corrects the car's understeer and oversteer, distributing the brake force on the appropriate wheels. The torque supplied by the engine can also be reduced in order to maintain control of the car.

WARNING!

- **Electronic Stability Control (ESC) cannot prevent the natural laws of physics from acting on the vehicle, nor can it increase the traction afforded by prevailing road conditions. ESC cannot prevent all collisions, including those resulting from excessive speed in turns, driving on very slippery surfaces, or**

(Continued)

WARNING! *(Continued)*

hydroplaning. ESC also cannot prevent collisions resulting from loss of vehicle control due to inappropriate driver input for the conditions. Only a safe, attentive, and skillful driver can prevent collisions.The capabilities of an ESC equipped vehicle must never be exploited in a reckless or dangerous manner which could jeopardize the user's safety or the safety of others.

- **Vehicle modifications, or failure to properly maintain your vehicle, may change the handling characteristics of your vehicle, and may negatively affect the performance of the ESC system. Changes to the steering system, suspension, braking system, tire type and size or wheel size may adversely affect ESC performance. Improperly inflated and unevenly worn tires may also degrade ESC performance. Any**

(Continued)

Downloaded from www.Manualslib.com manuals search engine

WARNING! ***(Continued)***

vehicle modification or poor vehicle maintenance that reduces the effectiveness of the ESC system can increase the risk of loss of vehicle control, vehicle rollover, personal injury and death.

The ESC system uses sensors installed on the car to determine the trajectory that the driver intends to follow and compares it with the car's effective trajectory. When the real trajectory deviates from the desired trajectory, the ESC system intervenes to counter the car's understeer or oversteer.

- Oversteer: occurs when the vehicle is turning more than it should according to the angle of the steering wheel.
- Understeer: occurs when the vehicle is turning less than it should according to the angle of the steering wheel.

This vehicle's advanced electronic brake control system also includes: Electronic Brake Distribution (EBD), Anti-Lock Brake System (ABS), Cornering Brake Control System (CBC), Drag Torque Control System (DTC), AntiSlip Regulation System (ASR), Hill Start Assist (HSA), Hydraulic Brake Assistant System (HBA), ELECTRONIC Q2 system (E-Q2) and Ready Alert Brake (RAB). All of the systems work together to enhance vehicle stability and control in various driving conditions, and are commonly referred to as ESC.

System Activation

The ESC system activates automatically when the engine is started and can only be deactivated by selecting "Race" mode. Refer to the "Six-Speed Alfa Twin Clutch Transmission" in this section for further information.

Downloaded from www.Manualslib.com manuals search engine

System Intervention

This is indicated by the flashing of the warning light on the instrument panel, to inform the driver that the car is in critical stability and grip conditions.

Electronic Brake Distribution System (EBD)

The EBD system is an integral part of the ESC system and intervenes during braking, distributing the brake force optimally between front and rear wheels.

This guarantees greater braking stability for the vehicle, preventing sudden locking of the rear wheels and the consequent instability of the vehicle.

Four-Wheel Anti-Lock Brake System (ABS)

The Four-Wheel ABS is designed to aid the driver in maintaining vehicle control under adverse braking conditions. The system operates with a separate computer to modulate hydraulic pressure, to prevent wheel lock-up and to help avoid skidding on slippery surfaces.

The system's pump motor runs during an ABS stop to provide regulated hydraulic pressure. The pump motor makes a low humming noise during operation, which is normal.

The ABS includes an amber ABS Warning Light. When the light is illuminated, the ABS is not functioning. The system reverts to standard non-anti-lock brakes. Turning the ignition Off and On again may reset the ABS if the fault detected was only momentary.

WARNING!

- **When the ABS intervenes and you feel the brake pedal pulsating, do not reduce the pressure, but hold it down firmly and confidently; in doing so you will brake in the shortest distance possible, depending on the current road conditions.**

(Continued)

Downloaded from www.Manualslib.com manuals search engine

WARNING! ***(Continued)***

- **For maximum efficiency of the braking system, a bedding-in period of about 311 miles (500 km) is required: during this period it is advisable to avoid sharp, repeated and prolonged braking.**
- **If the ABS intervenes, this indicates that the grip of the tires on the road is nearing its limit: you must slow down to a speed compatible with the available grip.**
- **The ABS can't overrule the natural laws of physics, and can't increase the grip available according to the condition of the road.**
- **The ABS cannot prevent accidents, including those due to excessive speed on corners, driving on low-grip surfaces or aquaplaning.**

(Continued)

WARNING! ***(Continued)***

- **The capability of the ABS must never be tested irresponsibly and dangerously, in such a way as to compromise personal safety and the safety of others.**
- **For the correct operation of the ABS, the tires must of necessity be the same make and type on all wheels, in perfect condition and, above all, of the prescribed type and dimensions.**

When you are in a severe braking condition involving the use of the ABS, you will experience some pedal drop as the vehicle comes to a stop. This is the result of the system reverting to the base brake system.

Engagement of the ABS may be accompanied by a pulsing sensation. You may also hear a clicking noise. These occurrences are normal and indicate that the system is functioning properly.

Downloaded from www.Manualslib.com manuals search engine

System Intervention

A slight pulsing of the brake pedal and noise indicates the intervention of the ABS: this is completely normal when the system intervenes.

Cornering Brake Control System (CBC)

The system acts when braking on corners, optimizing the distribution of brake pressure on the four wheels: the system prevents the wheels on the inside of the corner (less affected by the weight of the car) from locking, ensuring better stability and direction for the car.

Drag Torque Control System (DTC)

This is an integral part of the ESC system and intervenes in the event of sudden downshifting, or during braking when the ABS intervenes, restoring torque to the engine and thus preventing excessive drag at the drive wheels, which may lead the wheels to lock and a loss of car stability, above all in low-grip conditions.

AntiSlip Regulation System (ASR)

WARNING!

- **Electronic Stability Control (ESC) cannot prevent the natural laws of physics from acting on the vehicle, nor can it increase the traction afforded by prevailing road conditions. ESC cannot prevent all collisions, including those resulting from excessive speed in turns, driving on very slippery surfaces, or hydroplaning. ESC also cannot prevent collisions resulting from loss of vehicle control due to inappropriate driver input for the conditions. Only a safe, attentive, and skillful driver can prevent collisions.The capabilities of an ESC equipped vehicle must never be exploited in a reckless or dangerous manner which could jeopardize the user's safety or the safety of others.**

(Continued)

Downloaded from www.Manualslib.com manuals search engine

WARNING! ***(Continued)***

- **Vehicle modifications, or failure to properly maintain your vehicle, may change the handling characteristics of your vehicle, and may negatively affect the performance of the ESC system. Changes to the steering system, suspension, braking system, tire type and size or wheel size may adversely affect ESC performance. Improperly inflated and unevenly worn tires may also degrade ESC performance. Any vehicle modification or poor vehicle maintenance that reduces the effectiveness of the ESC system can increase the risk of loss of vehicle control, vehicle rollover, personal injury and death.**

This is an integral part of the ESC system and automatically operates in the event of one or both drive wheels slipping, loss of grip on wet roads (hydroplaning) and acceleration on slippery, snowy or icy roads, etc.

Depending on the slipping conditions, two different control systems are activated:

- If the slipping involves both drive wheels, the ASR system intervenes, reducing the power transmitted by the engine.
- If the slipping only involves one of the drive wheels, it also intervenes automatically, braking the wheel that is slipping.

System Intervention

This is indicated by the flashing of the warning light on the instrument panel, to inform the driver that the car is in critical stability and grip conditions.

Downloaded from www.Manualslib.com manuals search engine

Hill Start Assist (HSA)

This is an integral part of the ESC system and facilitates starting on slopes, activating automatically in the following cases:

- Uphill: car stationary on a road with a gradient higher than 5%, engine running, brake pressed and transmission in neutral (N) or gear other than reverse engaged.
- Downhill: car stationary on a road with a gradient higher than 5%, engine running, brake pressed and reverse (R) gear engaged.

When setting off, the ESC system control unit maintains the braking pressure on the wheels until the engine torque necessary for starting is reached, or in any case for a maximum of two seconds, allowing your right foot to be moved easily from the brake pedal to the accelerator. When the two seconds have elapsed, without starting, the system is automatically deactivated, gradually releasing the braking pressure. During this release stage, the typical brake disengagement noise, indicating that the car is going to move imminently, can be heard.

NOTE:

- HSA is not a parking brake; therefore, never leave the vehicle without having engaged the parking brake, turned the engine off and engaged first gear, so that the vehicle is parked in safe conditions.
- There may be situations on small gradients (less than 8%), with vehicle laden, in which the Hill Holder system may not activate, causing a slight reversing motion and increasing the risk of collision with another vehicle or object. The driver is, in any case, responsible for safe driving.

Downloaded from www.Manualslib.com manuals search engine

Hydraulic Brake Assistant System (HBA)

WARNING!

- **The HBA system can't overrule the natural laws of physics, and can't increase the grip available according to the condition of the road.**
- **The HBA system cannot prevent accidents, including those due to excessive speed on corners, driving on low-grip surfaces or aquaplaning.**
- **The capability of the HBA system must never be tested irresponsibly and dangerously, in such a way as to compromise the safety of the driver, the other occupants of the car or any other road user.**

The HBA system is designed to improve the car's braking capacity during emergency braking. The system detects emergency braking by monitoring the speed and force with which the brake pedal is pressed, and consequently applies the optimal brake pressure. This can reduce the braking distance, the HBA system therefore completes the ABS.

Maximum assistance from the HBA system is obtained pressing the brake pedal very quickly. In addition, the brake pedal should be pressed continuously during braking, avoiding intermittent presses, to get the most out of the system.

Do not reduce pressure on the brake pedal until braking is no longer necessary.

The HBA system is deactivated when the brake pedal is released.

Downloaded from www.Manualslib.com manuals search engine

Electronic Q2 System (E-Q2)

The "Electronic Q2" system intervenes during acceleration on corners, braking the inner drive wheel and thus increasing the traction of the outer wheel (which bears more of the car's weight): the torque is thus distributed optimally between the drive wheels in accordance with the driving conditions and road surface, permitting particularly effective, sporty driving.

Ready Alert Brake System (RAB)

This function activates automatically if the accelerator pedal is released rapidly, reducing the brake pad travel (both at front and back), with the aim of preparing the braking system and enhancing its responsiveness, thus reducing the stopping distance in the event of subsequent braking.

TIRE SAFETY INFORMATION

Tire Markings

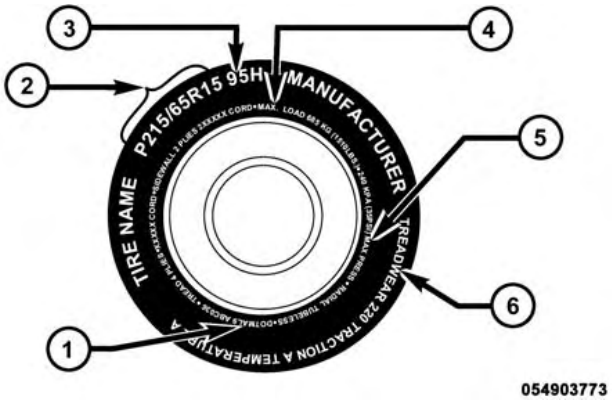

1 — U.S. DOT Safety Standards Code (TIN)
2 — Size Designation
3 — Service Description
4 — Maximum Load
5 — Maximum Pressure
6 — Treadwear, Traction and Temperature Grades

Downloaded from www.Manualslib.com manuals search engine

NOTE:

- P (Passenger) — Metric tire sizing is based on U.S. design standards. P-Metric tires have the letter "P" molded into the sidewall preceding the size designation. Example: P215/65R15 95H.
- European — Metric tire sizing is based on European design standards. Tires designed to this standard have the tire size molded into the sidewall beginning with the section width. The letter "P" is absent from this tire size designation. Example: 215/65R15 96H.
- LT (Light Truck) — Metric tire sizing is based on U.S. design standards. The size designation for LT-Metric tires is the same as for P-Metric tires except for the letters "LT" that are molded into the sidewall preceding the size designation. Example: LT235/85R16.
- Temporary spare tires are designed for temporary emergency use only. Temporary high pressure compact spare tires have the letter "T" or "S" molded into the sidewall preceding the size designation. Example: T145/80D18 103M.
- High flotation tire sizing is based on U.S. design standards and it begins with the tire diameter molded into the sidewall. Example: 31x10.5 R15 LT.

Downloaded from www.Manualslib.com manuals search engine

Tire Sizing Chart

EXAMPLE:

Example Size Designation: P215/65R15XL 95H, 215/65R15 96H, LT235/85R16C, T145/80D18 103M, 31x10.5 R15 LT
P = Passenger car tire size based on U.S. design standards, or **"....blank...."** = Passenger car tire based on European design standards, or **LT** = Light truck tire based on U.S. design standards, or **T or S** = Temporary spare tire or **31** = Overall diameter in inches (in)
215, 235, 145 = Section width in millimeters (mm)
65, 85, 80 = Aspect ratio in percent (%) – Ratio of section height to section width of tire, or **10.5** = Section width in inches (in)
R = Construction code – "R" means radial construction, or – "D" means diagonal or bias construction
15, 16, 18 = Rim diameter in inches (in)

Downloaded from www.Manualslib.com manuals search engine

EXAMPLE:

Service Description:
95 = Load Index – A numerical code associated with the maximum load a tire can carry
H = Speed Symbol – A symbol indicating the range of speeds at which a tire can carry a load corresponding to its load index under certain operating conditions – The maximum speed corresponding to the speed symbol should only be achieved under specified operating conditions (i.e., tire pressure, vehicle loading, road conditions, and posted speed limits)
Load Identification: Absence of the following load identification symbols on the sidewall of the tire indicates a Standard Load (SL) tire: • **XL** = Extra load (or reinforced) tire, or • **LL** = Light load tire or • **C, D, E, F, G** = Load range associated with the maximum load a tire can carry at a specified pressure
Maximum Load – Maximum load indicates the maximum load this tire is designed to carry
Maximum Pressure – Maximum pressure indicates the maximum permissible cold tire inflation pressure for this tire

Downloaded from www.Manualslib.com manuals search engine

Tire Identification Number (TIN)

The TIN may be found on one or both sides of the tire, however, the date code may only be on one side. Tires with white sidewalls will have the full TIN, including the date code, located on the white sidewall side of the tire.

Look for the TIN on the outboard side of black sidewall tires as mounted on the vehicle. If the TIN is not found on the outboard side, then you will find it on the inboard side of the tire.

EXAMPLE:
DOT MA L9 ABCD 0301
DOT = Department of Transportation – This symbol certifies that the tire is in compliance with the U.S. Department of Transportation tire safety standards and is approved for highway use
MA = Code representing the tire manufacturing location (two digits)
L9 = Code representing the tire size (two digits)
ABCD = Code used by the tire manufacturer (one to four digits)
03 = Number representing the week in which the tire was manufactured (two digits) – 03 means the 3rd week

Downloaded from www.Manualslib.com manuals search engine

EXAMPLE:
DOT MA L9 ABCD 0301
01 = Number representing the year in which the tire was manufactured (two digits) – 01 means the year 2001 – Prior to July 2000, tire manufacturers were only required to have one number to represent the year in which the tire was manufactured. Example: 031 could represent the 3rd week of 1981 or 1991

Downloaded from www.Manualslib.com manuals search engine

Tire Terminology And Definitions

Term	Definition
B-Pillar	The vehicle B-Pillar is the structural member of the body located behind the front door.
Cold Tire Inflation Pressure	Cold tire inflation pressure is defined as the tire pressure after the vehicle has not been driven for at least three hours, or driven less than 1 mile (1.6 km) after sitting for a minimum of three hours. Inflation pressure is measured in units of PSI (pounds per square inch) or kPa (kilopascals).
Maximum Inflation Pressure	The maximum inflation pressure is the maximum permissible cold tire inflation pressure for this tire. The maximum inflation pressure is molded into the sidewall.
Recommended Cold Tire Inflation Pressure	Vehicle manufacturer's recommended cold tire inflation pressure as shown on the tire placard.
Tire Placard	A label permanently attached to the vehicle describing the vehicle's loading capacity, the original equipment tire sizes and the recommended cold tire inflation pressures.

Downloaded from www.Manualslib.com manuals search engine

Tire Loading And Tire Pressure

Tire And Loading Information Placard Location

NOTE: The proper cold tire inflation pressure is listed on the driver's side B-Pillar or the rear edge of the driver's side door.

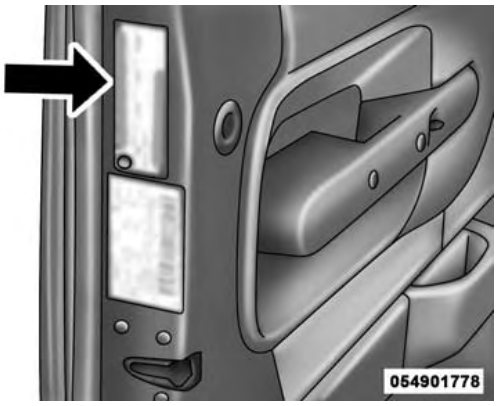

Example Tire Placard Location (Door)

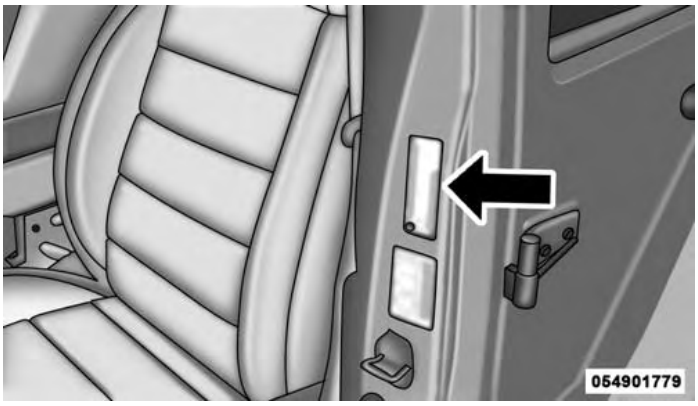

Example Tire Placard Location (B-Pillar)

Downloaded from www.Manualslib.com manuals search engine

Tire And Loading Information Placard

811b5a9a

Tire And Loading Information Placard

This placard tells you important information about the:

1. Number of people that can be carried in the vehicle.
2. Total weight your vehicle can carry.
3. Tire size designed for your vehicle.
4. Cold tire inflation pressures for the front, rear, and spare tires.

Loading

The vehicle maximum load on the tire must not exceed the load carrying capacity of the tire on your vehicle. You will not exceed the tire's load carrying capacity if you adhere to the loading conditions, tire size, and cold tire inflation pressures specified on the Tire and Loading Information placard and in the "Vehicle Loading" section of this manual.

NOTE: Under a maximum loaded vehicle condition, gross axle weight ratings (GAWRs) for the front and rear axles must not be exceeded. For further information on GAWRs, vehicle loading, and trailer towing, refer to "Vehicle Loading" in this section.

Downloaded from www.Manualslib.com manuals search engine

To determine the maximum loading conditions of your vehicle, locate the statement "The combined weight of occupants and cargo should never exceed XXX lbs or XXX kg" on the Tire and Loading Information placard. The combined weight of occupants, cargo/luggage and trailer tongue weight (if applicable) should never exceed the weight referenced here.

Steps For Determining Correct Load Limit

1. Locate the statement "The combined weight of occupants and cargo should never exceed XXX lbs or XXX kg" on your vehicle's placard.
2. Determine the combined weight of the driver and passengers that will be riding in your vehicle.
3. Subtract the combined weight of the driver and passengers from XXX lbs or XXX kg.
4. The resulting figure equals the available amount of cargo and luggage load capacity. For example, if "XXX" amount equals 1,400 lbs (635 kg) and there will be five 150 lb (68 kg) passengers in your vehicle, the amount of available cargo and luggage load capacity is 650 lbs (295 kg) (since 5 x 150 lbs (68 kg) = 750 lbs (340 kg), and 1400 lbs (635 kg) – 750 lbs (340 kg) = 650 lbs [295 kg]).
5. Determine the combined weight of luggage and cargo being loaded on the vehicle. That weight may not safely exceed the available cargo and luggage load capacity calculated in step 4.

Downloaded from www.Manualslib.com manuals search engine

NOTE:

- If your vehicle will be towing a trailer, load from your trailer will be transferred to your vehicle. The following table shows examples on how to calculate total load, cargo/luggage, and towing capacities of your vehicle with varying seating configurations and number and size of occupants. This table is for illustration purposes only and may not be accurate for the seating and load carry capacity of your vehicle.
- For the following example, the combined weight of occupants and cargo should never exceed 865 lbs (392 kg).

Downloaded from www.Manualslib.com manuals search engine

Occupants			Combined weight of occupants and cargo from Tire Placard	MINUS	Combined Occupant's weight	=	AVAILABLE Cargo/Luggage and Trailer Tongue Weight
TOTAL	FRONT	REAR					
EXAMPLE 1							
5	2	3			Occupant 1: 200 lbs Occupant 2: 130 lbs Occupant 3: 160 lbs Occupant 4: 100 lbs Occupant 5: 80 lbs TOTAL WEIGHT: 670 lbs		
			865 lbs	minus	670 lbs	=	195 lbs
EXAMPLE 2							
3	2	1			Occupant 1: 210 lbs Occupant 2: 180 lbs Occupant 3: 150 lbs TOTAL WEIGHT: 540 lbs		
			865 lbs	minus	540 lbs	=	325 lbs
EXAMPLE 3							
2	2	0			Occupant 1: 200 lbs Occupant 2: 200 lbs TOTAL WEIGHT: 400 lbs		
			865 lbs	minus	400 lbs	=	465 lbs

EXAMPLE

811a4d11

Downloaded from www.Manualslib.com manuals search engine

WARNING!

Overloading of your tires is dangerous. Overloading can cause tire failure, affect vehicle handling, and increase your stopping distance. Use tires of the recommended load capacity for your vehicle. Never overload them.

TIRES — GENERAL INFORMATION

Tire Pressure

Proper tire inflation pressure is essential to the safe and satisfactory operation of your vehicle. Four primary areas are affected by improper tire pressure:

- Safety and Vehicle Stability
- Economy
- Tread Wear
- Ride Comfort

Safety

WARNING!

- **Improperly inflated tires are dangerous and can cause collisions.**
- **Under-inflation increases tire flexing and can result in overheating and tire failure.**
- **Over-inflation reduces a tire's ability to cushion shock. Objects on the road and chuckholes can cause damage that result in tire failure.**
- **Overinflated or under-inflated tires can affect vehicle handling and can fail suddenly, resulting in loss of vehicle control.**
- **Unequal tire pressures can cause steering problems. You could lose control of your vehicle.**

(Continued)

Downloaded from www.Manualslib.com manuals search engine

WARNING! ***(Continued)***

- **Unequal tire pressures from one side of the vehicle to the other can cause the vehicle to drift to the right or left.**
- **Always drive with each tire inflated to the recommended cold tire inflation pressure.**

Both under-inflation and over-inflation affect the stability of the vehicle and can produce a feeling of sluggish response or over responsiveness in the steering.

NOTE:

- Unequal tire pressures from side to side may cause erratic and unpredictable steering response.
- Unequal tire pressure from side to side may cause the vehicle to drift left or right.

Economy

Underinflated tires will increase tire rolling resistance resulting in higher fuel consumption.

Tread Wear

Improper cold tire inflation pressures can cause abnormal wear patterns and reduced tread life, resulting in the need for earlier tire replacement.

Ride Comfort And Vehicle Stability

Proper tire inflation contributes to a comfortable ride. Over-inflation produces a jarring and uncomfortable ride.

Tire Inflation Pressures

The proper cold tire inflation pressure is listed on the driver's side B-Pillar or rear edge of the driver's side door.

Downloaded from www.Manualslib.com manuals search engine

At least once a month:

- Check and adjust tire pressure with a good quality pocket-type pressure gauge. Do not make a visual judgement when determining proper inflation. Tires may look properly inflated even when they are under-inflated.
- Inspect tires for signs of tire wear or visible damage.

CAUTION!

After inspecting or adjusting the tire pressure, always reinstall the valve stem cap. This will prevent moisture and dirt from entering the valve stem, which could damage the valve stem.

Inflation pressures specified on the placard are always "cold tire inflation pressure." Cold tire inflation pressure is defined as the tire pressure after the vehicle has not been driven for at least three hours, or driven less than 1 mile (1.6 km) after sitting for a minimum of three hours. The cold tire inflation pressure must not exceed the maximum inflation pressure molded into the tire sidewall.

Check tire pressures more often if subject to a wide range of outdoor temperatures, as tire pressures vary with temperature changes.

Tire pressures change by approximately 1 psi (7 kPa) per 12°F (7°C) of air temperature change. Keep this in mind when checking tire pressure inside a garage, especially in the winter.

Example: If garage temperature = 68°F (20°C) and the outside temperature = 32°F (0°C) then the cold tire inflation pressure should be increased by 3 psi (21 kPa), which equals 1 psi (7 kPa) for every 12°F (7°C) for this outside temperature condition.

Downloaded from www.Manualslib.com manuals search engine

Tire pressure may increase from 2 to 6 psi (13 to 40 kPa) during operation. DO NOT reduce this normal pressure build up or your tire pressure will be too low.

Tire Pressures For High Speed Operation

The manufacturer advocates driving at safe speeds and within posted speed limits. Where speed limits or conditions are such that the vehicle can be driven at high speeds, maintaining correct tire inflation pressure is very important. Increased tire pressure and reduced vehicle loading may be required for high-speed vehicle operation. Refer to your authorized tire dealer or original equipment vehicle dealer for recommended safe operating speeds, loading and cold tire inflation pressures.

WARNING!

High speed driving with your vehicle under maximum load is dangerous. The added strain on your tires could cause them to fail. You could have a serious collision. Do not drive a vehicle loaded to the maximum capacity at continuous speeds above 75 mph (120 km/h).

Radial Ply Tires

WARNING!

Combining radial ply tires with other types of tires on your vehicle will cause your vehicle to handle poorly. The instability could cause a collision. Always use radial ply tires in sets of four. Never combine them with other types of tires.

Downloaded from www.Manualslib.com manuals search engine

Tire Repair

If your tire becomes damaged, it may be repaired if it meets the following criteria:

- The tire has not been driven on when flat.
- The damage is only on the tread section of your tire (sidewall damage is not repairable).
- The puncture is no greater than a ¼ of an inch (6 mm).

Consult an authorized tire dealer for tire repairs and additional information.

Damaged Run Flat tires, or Run Flat tires that have experienced a loss of pressure should be replaced immediately with another Run Flat tire of identical size and service description (Load Index and Speed Symbol).

Tire Types

All Season Tires — If Equipped

All Season tires provide traction for all seasons (spring, summer, fall and winter). Traction levels may vary between different all season tires. All season tires can be identified by the M+S, M&S, M/S or MS designation on the tire sidewall. Use all season tires only in sets of four; failure to do so may adversely affect the safety and handling of your vehicle.

Summer Or Three Season Tires — If Equipped

Summer tires provide traction in both wet and dry conditions, and are not intended to be driven in snow or on ice. If your vehicle is equipped with summer tires, be aware these tires are not designed for winter or cold driving conditions. Install winter tires on your vehicle when ambient temperatures are less than 40°F (5°C) or if roads are covered with ice or snow. For more information, contact an authorized dealer.

Downloaded from www.Manualslib.com manuals search engine

Summer tires do not contain the all season designation or mountain/snowflake symbol on the tire sidewall. Use summer tires only in sets of four; failure to do so may adversely affect the safety and handling of your vehicle.

WARNING!

Do not use summer tires in snow/ice conditions. You could lose vehicle control, resulting in severe injury or death. Driving too fast for conditions also creates the possibility of loss of vehicle control.

Snow Tires

Some areas of the country require the use of snow tires during the winter. Snow tires can be identified by a "mountain/snowflake" symbol on the tire sidewall.

If you need snow tires, select tires equivalent in size and type to the original equipment tires. Use snow tires only in sets of four; failure to do so may adversely affect the safety and handling of your vehicle.

Snow tires generally have lower speed ratings than what was originally equipped with your vehicle and should not be operated at sustained speeds over 75 mph (120 km/h). For speeds above 75 mph (120 km/h) refer to original equipment or an authorized tire dealer for recommended safe operating speeds, loading and cold tire inflation pressures.

Downloaded from www.Manualslib.com manuals search engine

While studded tires improve performance on ice, skid and traction capability on wet or dry surfaces may be poorer than that of non-studded tires. Some states prohibit studded tires; therefore, local laws should be checked before using these tire types.

Run Flat Tires — If Equipped

Run Flat tires allow you the capability to drive 50 miles (80 km) at 50 mph (80 km/h) after a rapid loss of inflation pressure. This rapid loss of inflation is referred to as the Run Flat mode. A Run Flat mode occurs when the tire inflation pressure is of/or below 14 psi (96 kPa). Once a Run Flat tire reaches the run flat mode it has limited driving capabilities and needs to be replaced immediately. A Run Flat tire is not repairable.

It is not recommended driving a vehicle loaded at full capacity or to tow a trailer while a tire is in the run flat mode.

See the tire pressure monitoring section for more information.

Spare Tires — If Equipped

NOTE: For vehicles equipped with Tire Service Kit instead of a spare tire, please refer to "Tire Service Kit" in "What To Do In Emergencies" for further information.

CAUTION!

Because of the reduced ground clearance, do not take your vehicle through an automatic car wash with a compact or limited-use temporary spare installed. Damage to the vehicle may result.

Downloaded from www.Manualslib.com manuals search engine

Spare Tire Matching Original Equipped Tire And Wheel — If Equipped

Your vehicle may be equipped with a spare tire and wheel equivalent in look and function to the original equipment tire and wheel found on the front or rear axle of your vehicle. This spare tire may be used in the tire rotation for your vehicle. If your vehicle has this option, refer to an authorized tire dealer for the recommended tire rotation pattern.

Compact Spare Tire — If Equipped

The compact spare is for temporary emergency use only. You can identify if your vehicle is equipped with a compact spare by looking at the spare tire description on the Tire and Loading Information Placard located on the driver's side door opening or on the sidewall of the tire. Compact spare tire descriptions begin with the letter "T" or "S" preceding the size designation. Example: T145/80D18 103M.

T, S = Temporary Spare Tire

Since this tire has limited tread life, the original equipment tire should be repaired (or replaced) and reinstalled on your vehicle at the first opportunity.

Do not install a wheel cover or attempt to mount a conventional tire on the compact spare wheel, since the wheel is designed specifically for the compact spare tire. Do not install more than one compact spare tire and wheel on the vehicle at any given time.

WARNING!

Compact spares are for temporary emergency use only. With these spares, do not drive more than 50 mph (80 km/h). Temporary use spares have limited tread life. When the tread is worn to the tread wear indicators, the temporary use spare tire needs to be replaced. Be sure to follow the warnings, which apply to your spare. Failure to do so could result in spare tire failure and loss of vehicle control.

Downloaded from www.Manualslib.com manuals search engine

Full Size Spare — If Equipped

The full size spare is for temporary emergency use only. This tire may look like the originally equipped tire on the front or rear axle of your vehicle, but it is not. This spare tire may have limited tread life. When the tread is worn to the tread wear indicators, the temporary use full size spare tire needs to be replaced. Since it is not the same as your original equipment tire, replace (or repair) the original equipment tire and reinstall on the vehicle at the first opportunity.

Limited-Use Spare — If Equipped

The limited-use spare tire is for temporary emergency use only. This tire is identified by a label located on the limited-use spare wheel. This label contains the driving limitations for this spare. This tire may look like the original equipped tire on the front or rear axle of your vehicle, but it is not. Installation of this limited-use spare tire affects vehicle handling. Since it is not the same as your original equipment tire, replace (or repair) the original equipment tire and reinstall on the vehicle at the first opportunity.

WARNING!

Limited-use spares are for emergency use only. Installation of this limited-use spare tire affects vehicle handling. With this tire, do not drive more than the speed listed on the limit-use spare wheel. Keep inflated to the cold tire inflation pressures listed on your Tire and Loading Information Placard located on the driver's side B-Pillar or the rear edge of the driver's side door. Replace (or repair) the original equipment tire at the first opportunity and reinstall it on your vehicle. Failure to do so could result in loss of vehicle control.

Downloaded from www.Manualslib.com manuals search engine

Tire Spinning

When stuck in mud, sand, snow, or ice conditions, do not spin your vehicle's wheels above 30 mph (48 km/h) or for longer than 30 seconds continuously without stopping.

Refer to "Freeing A Stuck Vehicle" in "What To Do In Emergencies" for further information.

WARNING!

Fast spinning tires can be dangerous. Forces generated by excessive wheel speeds may cause tire damage or failure. A tire could explode and injure someone. Do not spin your vehicle's wheels faster than 30 mph (48 km/h) for more than 30 seconds continuously when you are stuck, and do not let anyone near a spinning wheel, no matter what the speed.

Tread Wear Indicators

Tread wear indicators are in the original equipment tires to help you in determining when your tires should be replaced.

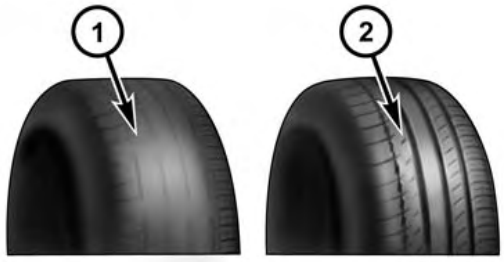

055007576

1 — Worn Tire
2 — New Tire

Downloaded from www.Manualslib.com manuals search engine

These indicators are molded into the bottom of the tread grooves. They will appear as bands when the tread depth becomes a 1/16 of an inch (2 mm). When the tread is worn to the tread wear indicators, the tire should be replaced. Refer to "Replacement Tires" in this section for further information.

Life Of Tire

The service life of a tire is dependent upon varying factors including, but not limited to:

- Driving style.
- Tire pressure - Improper cold tire inflation pressures can cause uneven wear patterns to develop across the tire tread. These abnormal wear patterns will reduce tread life, resulting in the need for earlier tire replacement.
- Distance driven.
- Performance tires, tires with a speed rating of V or higher, and summer tires typically have a reduced tread life. Rotation of these tires per the vehicle maintenance schedule is highly recommended.

WARNING!

Tires and the spare tire should be replaced after six years, regardless of the remaining tread. Failure to follow this warning can result in sudden tire failure. You could lose control and have a collision resulting in serious injury or death.

Keep dismounted tires in a cool, dry place with as little exposure to light as possible. Protect tires from contact with oil, grease, and gasoline.

Downloaded from www.Manualslib.com manuals search engine

Replacement Tires

The tires on your new vehicle provide a balance of many characteristics. They should be inspected regularly for wear and correct cold tire inflation pressures. The manufacturer strongly recommends that you use tires equivalent to the originals in size, quality and performance when replacement is needed. Refer to the paragraph on "Tread Wear Indicator." Refer to the Tire and Loading Information placard or the Vehicle Certification Label for the size designation of your tire. The Load Index and Speed Symbol for your tire will be found on the original equipment tire sidewall. See the Tire Sizing Chart example found in the Tire Safety Information section of this manual for more information relating to the Load Index and Speed Symbol of a tire.

It is recommended to replace the two front tires or two rear tires as a pair. Replacing just one tire can seriously affect your vehicle's handling. If you ever replace a wheel, make sure that the wheel's specifications match those of the original wheels.

It is recommended you contact your authorized tire dealer or original equipment dealer with any questions you may have on tire specifications or capability. Failure to use equivalent replacement tires may adversely affect the safety, handling, and ride of your vehicle.

WARNING!

- **Do not use a tire, wheel size or rating other than that specified for your vehicle. Some combinations of unapproved tires and wheels may change suspension dimensions and performance characteristics, resulting in changes to steering, handling, and**

(Continued)

Downloaded from www.Manualslib.com manuals search engine

WARNING! ***(Continued)***

braking of your vehicle. This can cause unpredictable handling and stress to steering and suspension components. You could lose control and have a collision resulting in serious injury or death. Use only the tire and wheel sizes with load ratings approved for your vehicle.

- **Never use a tire with a smaller load index or capacity, other than what was originally equipped on your vehicle. Using a tire with a smaller load index could result in tire overloading and failure. You could lose control and have a collision.**
- **Failure to equip your vehicle with tires having adequate speed capability can result in sudden tire failure and loss of vehicle control.**

CAUTION!

Replacing original tires with tires of a different size may result in false speedometer and odometer readings.

TIRE CHAINS (TRACTION DEVICES)

Use of traction devices require sufficient tire-to-body clearance. Follow these recommendations to guard against damage.

- Traction device must be of proper size for the tire, as recommended by the traction device manufacturer.
- Install on Rear Tires Only.
- Reduced size snow chains with a maximum projection of 7 mm beyond the tire profile can be fitted on cars equipped with 235/40 R18 rear tire.

Downloaded from www.Manualslib.com manuals search engine

CAUTION!

To avoid damage to your vehicle or tires, observe the following precautions:

- **Because of restricted traction device clearance between tires and other suspension components, it is important that only traction devices in good condition are used. Broken devices can cause serious damage. Stop the vehicle immediately if noise occurs that could indicate device breakage. Remove the damaged parts of the device before further use.**
- **Install device as tightly as possible and then retighten after driving about ½ mile (0.8 km).**
- **Do not exceed 30 mph (48 km/h).**
- **Drive cautiously and avoid severe turns and large bumps, especially with a loaded vehicle.**
- **Do not drive for a prolonged period on dry pavement.**

(Continued)

CAUTION! ***(Continued)***

- **Observe the traction device manufacturer's instructions on the method of installation, operating speed, and conditions for use. Always use the suggested operating speed of the device manufacturer's if it is less than 30 mph (48 km/h).**
- **Do not use traction devices on a compact spare tire.**

TIRE ROTATION RECOMMENDATIONS

Due to tire design and size, tire rotations on this vehicle are not possible.

Downloaded from www.Manualslib.com manuals search engine

NOTE: For AR 4C models, where available, the vehicle may be equipped with high performance tires that guarantee high grip performance with little increase of wear. Alfa Romeo, in collaboration with Pirelli, developed a specific high performance tire for the 4C model. A dedicated Pirelli PZero, identified with an AR mark, guarantees this vehicle to obtain the highest performance capable.

TIRE PRESSURE MONITORING SYSTEM (TPMS)

The Tire Pressure Monitor System (TPMS) will warn the driver of a low tire pressure based on the vehicle recommended cold tire pressure.

The tire pressure will vary with temperature by about 1 psi (7 kPa) for every 12° F (6.5° C). This means that when the outside temperature decreases, the tire pressure will decrease. Tire pressure should always be set based on cold inflation tire pressure. This is defined as the tire pressure after the vehicle has not been driven for at least three hours, or driven less than 1 mile (1.6 km) after a three hour period. The cold tire inflation pressure must not exceed the maximum inflation pressure molded into the tire sidewall. Refer to "Tires – General Information" in "Starting and Operating" for information on how to properly inflate the vehicle's tires. The tire pressure will also increase as the vehicle is driven, this is normal and there should be no adjustment for this increased pressure.

The TPMS will warn the driver of a low tire pressure if the tire pressure falls below the low pressure warning limit for any reason, including low temperature effects, or natural pressure loss through the tire.

The TPMS will continue to warn the driver of low tire pressure as long as the condition exists, and will not turn off until the tire pressure is at or above the recommended cold tire pressure on the placard. Once the low tire pressure warning (Tire Pressure Monitoring Telltale Light) illuminates, you must increase the tire pressure to

Downloaded from www.Manualslib.com manuals search engine

the recommended cold tire pressure in order for the Tire Pressure Monitoring Telltale Light to turn off. The system will automatically update and the Tire Pressure Monitoring Telltale Light will turn off once the system receives the updated tire pressures. The vehicle may need to be driven for up to 20 minutes above 15 mph (24 km/h) in order for the TPMS to receive this information.

For example, your vehicle may have a recommended cold (parked for more than three hours) tire pressure of 30 psi (207 kPa). If the ambient temperature is 68° F (20° C) and the measured tire pressure is 27 psi (186 kPa), a temperature drop to 20° F (-7° C) will decrease the tire pressure to approximately 23 psi (159 kPa). This tire pressure is sufficiently low enough to turn on the Tire Pressure Monitoring Telltale Light. Driving the vehicle may cause the tire pressure to rise to approximately 27 psi (186 kPa), but the Tire Pressure Monitoring Telltale Light will still be on. In this situation, the Tire Pressure Monitoring Telltale Light will turn off only after the tires are inflated to the vehicle's recommended cold tire pressure value.

CAUTION!

- **The TPMS has been optimized for the original equipment tires and wheels. TPMS pressures and warnings have been established for the tire size equipped on your vehicle. Undesirable system operation or sensor damage may result when using replacement equipment that is not of the same size, type, and/or style. Aftermarket wheels can cause sensor damage. Using aftermarket tire sealants may cause the Tire Pressure Monitoring System (TPMS) sensor to become inoperable. After using an aftermarket tire sealant it is recommended that you take your vehicle to your an authorized dealership to have your sensor function checked.**

(Continued)

Downloaded from www.Manualslib.com manuals search engine

CAUTION! ***(Continued)***

- **After inspecting or adjusting the tire pressure, always reinstall the valve stem cap. This will prevent moisture and dirt from entering the valve stem, which could damage the Tire Pressure Monitoring Sensor.**

NOTE:

- The TPMS is not intended to replace normal tire care and maintenance, or to provide warning of a tire failure or condition.
- The TPMS should not be used as a tire pressure gauge while adjusting your tire pressure.
- Driving on a significantly under-inflated tire causes the tire to overheat and can lead to tire failure. Under-inflation also reduces fuel efficiency and tire tread life, and may affect the vehicle's handling and stopping ability.
- The TPMS is not a substitute for proper tire maintenance, and it is the driver's responsibility to maintain correct tire pressure using an accurate tire gauge, even if under-inflation has not reached the level to trigger illumination of the Tire Pressure Monitoring Telltale Light.
- Seasonal temperature changes will affect tire pressure, and the TPMS will monitor the actual tire pressure in the tire.

Base System

This is the TPMS warning indicator located in the instrument cluster.

The TPMS uses wireless technology with wheel rim mounted electronic sensors to monitor tire pressure levels. Sensors, mounted to each wheel as part of the valve stem, transmit tire pressure readings to the Receiver Module.

Downloaded from www.Manualslib.com manuals search engine

NOTE: It is particularly important for you to check the tire pressure in all of the tires on your vehicle regularly and to maintain the proper pressure.

The TPMS consists of the following components:

- Receiver Module.
- Four Tire Pressure Monitoring Sensors.
- Tire Pressure Monitoring Telltale Light.

Tire Pressure Monitoring Low Pressure Warnings

The Tire Pressure Monitoring Telltale Light will illuminate in the instrument cluster, an audible chime will be activated, and the "Check left or right front/rear tire" text message will display when one or more of the four active road tire pressures are low. Should this occur, you should stop as soon as possible, check the inflation pressure of each tire on your vehicle, and inflate each tire to the vehicle's recommended cold placard pressure value. The system will automatically update and the Tire Pressure Monitoring Light will extinguish once the updated tire pressures have been received. The vehicle may need to be driven for up to 20 minutes above 15 mph (24 km/h) to receive this information.

Check TPMS Warnings

The Tire Pressure Monitoring Telltale Light will flash on and off for 75 seconds and remain on solid when a system fault is detected, the "TIRE PRESSURE MONITORING UNAVAILABLE" text message will display. If the ignition key is cycled, this sequence will repeat providing the system fault still exists. The Tire Pressure Monitoring Telltale Light will turn off when the fault condition no longer exists. A system fault can occur with any of the following scenarios:

1. Jamming due to electronic devices or driving next to facilities emitting the same radio frequencies as the TPM sensors.

Downloaded from www.Manualslib.com manuals search engine

2. Installing some form of aftermarket window tinting that affects radio wave signals.
3. Snow or ice around the wheels or wheel housings.
4. Using tire chains on the vehicle.
5. Using wheels/tires not equipped with TPM sensors.

NOTE: Your vehicle may be equipped with a compact spare wheel and tire assembly.

1. The compact spare tire does not have a tire pressure monitoring sensor. Therefore, the TPMS will not monitor the tire pressure in the compact spare tire.
2. If you install the compact spare tire in place of a road tire that has a pressure below the low-pressure warning limit, upon the next ignition key cycle, a chime will sound and the Tire Pressure Monitoring Telltale Light will still turn ON due to the low tire.
3. However, after driving the vehicle for up to 20 minutes above 15 mph (24 km/h), the Tire Pressure Monitoring Telltale Light will flash on and off for 75 seconds and then remain on solid.
4. This occurs for each subsequent ignition key cycle, a chime will sound and the Tire Pressure Monitoring Telltale Light will flash on and off for 75 seconds and then remain on solid.
5. Once you repair or replace the original road tire and reinstall it on the vehicle in place of the compact spare tire, the TPMS will update automatically and the Tire Pressure Monitoring Telltale Light will turn OFF, as long as no tire pressure is below the low-pressure warning limit in any of the four active road tires. The vehicle may need to be driven for up to 20 minutes above 15 mph (24 km/h) in order for the TPMS to receive this information.

Downloaded from www.Manualslib.com manuals search engine

General Information

This device complies with Part 15 of the FCC rules and RSS 210 of Industry Canada. Operation is subject to the following conditions:

- This device may not cause harmful interference.
- This device must accept any interference received, including interference that may cause undesired operation.

The tire pressure sensors are covered under one of the following licenses:

United States	MRXC4W4MA4
Canada	2546A-C4W4MA4 (Single)

FUEL REQUIREMENTS — 1.750 Turbo

The 1.750 turbo engine is designed to meet all emissions regulations and provide excellent fuel economy and performance when using high-quality premium unleaded gasoline with an octane rating of **Only 91 or higher**.

Light spark knock at low engine speeds is not harmful to your engine. However, continued heavy spark knock at high speeds can cause damage and immediate service is required.

Poor quality gasoline can cause problems such as hard starting, stalling and hesitations. If you experience these symptoms, try another brand of gasoline (with the appropriate octane rating for your engine) before considering service for the vehicle.

Downloaded from www.Manualslib.com manuals search engine

Reformulated Gasoline

Many areas of the country require the use of cleaner burning gasoline referred to as "Reformulated Gasoline." Reformulated gasoline contain oxygenates and are specifically blended to reduce vehicle emissions and improve air quality.

The manufacturer supports the use of reformulated gasoline. Properly blended reformulated gasoline will provide excellent performance and durability of engine and fuel system components.

Gasoline/Oxygenate Blends

Some fuel suppliers blend unleaded gasoline with oxygenates such as 10% Ethanol, Methyl Tert-Butyl Ether (MTBE), and Ethyl Tret-Butyl Ether (ETBE). Oxygenates are required in some areas of the country during the winter months to reduce carbon monoxide emissions. Fuels blended with these oxygenates may be used in your vehicle.

CAUTION!

Do not use gasoline containing Methanol or E-85 Ethanol. Use of these blends may result in starting and drivability problems and may damage critical fuel system components.

Problems that result from using methanol/gasoline blends are not the responsibility of the manufacturer. While MTBE is an oxygenate made from Methanol, it does not have the negative effects of Methanol.

MMT In Gasoline

Methylcyclopentadienyl Manganese Tricarbonyl (MMT) is a manganese-containing metallic additive that is blended into some gasoline to increase octane. Gasoline blended with MMT provides no performance advantage beyond gasoline of the same octane number without MMT. Gasoline blended with MMT reduces spark plug life and reduces emissions system performance in some

Downloaded from www.Manualslib.com manuals search engine

vehicles. The manufacturer recommends that gasoline without MMT be used in your vehicle. The MMT content of gasoline may not be indicated on the gasoline pump, therefore, you should ask your gasoline retailer whether the gasoline contains MMT. MMT is prohibited in Federal and California reformulated gasoline.

Materials Added To Fuel

All gasoline sold in the United States is required to contain effective detergent additives. Use of additional detergents or other additives is not needed under normal conditions and they would result in additional cost. Therefore, you should not have to add anything to the fuel.

Fuel System Cautions

CAUTION!

Follow these guidelines to maintain your vehicle's performance:

- **The use of leaded gas is prohibited by Federal law. Using leaded gasoline can impair engine performance and damage the emissions control system.**
- **An out-of-tune engine or certain fuel or ignition malfunctions can cause the catalytic converter to overheat. If you notice a pungent burning odor or some light smoke, your engine may be out of tune or malfunctioning and may require immediate service. Contact your authorized dealer for service assistance.**

(Continued)

Downloaded from www.Manualslib.com manuals search engine

CAUTION! *(Continued)*

- **The use of fuel additives, which are now being sold as octane enhancers, is not recommended. Most of these products contain high concentrations of methanol. Fuel system damage or vehicle performance problems resulting from the use of such fuels or additives is not the responsibility of the manufacturer.**

NOTE: Intentional tampering with the emissions control system can result in civil penalties being assessed against you.

Carbon Monoxide Warnings

WARNING!

Carbon monoxide (CO) in exhaust gases is deadly. Follow the precautions below to prevent carbon monoxide poisoning:

- **Do not inhale exhaust gases. They contain carbon monoxide, a colorless and odorless gas, which can kill. Never run the engine in a closed area, such as a garage, and never sit in a parked vehicle with the engine running for an extended period. If the vehicle is stopped in an open area with the engine running for more than a short period, adjust the ventilation system to force fresh, outside air into the vehicle.**
- **Guard against carbon monoxide with proper maintenance. Have the exhaust system inspected every time the vehicle is raised. Have any abnormal conditions repaired promptly. Until repaired, drive with all side windows fully open.**

Downloaded from www.Manualslib.com manuals search engine

ADDING FUEL/SMART FUEL

NOTE:

- The "Smart Fuel" is a device placed on the top of the filler pipe, it opens and closes automatically when the fuel nozzle is inserted or extracted.
- Only the correct nozzle size diameter allows the flap door to open when the nozzle is inserted.

Refueling Procedure

1. Open the fuel filler door pulling towards outside.

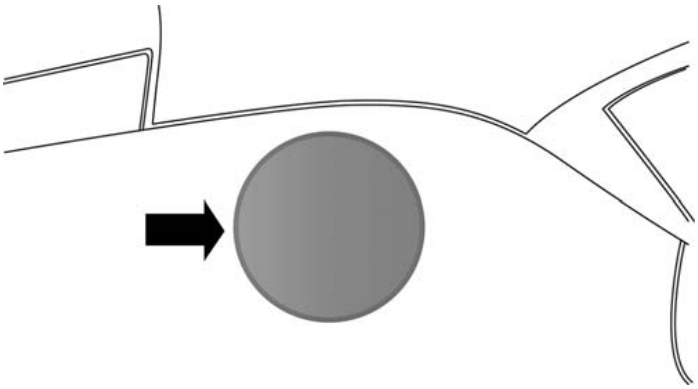

Fuel Filler Door Location

2. There is no fuel filler cap. A flap door inside the pipe seals the system.

Downloaded from www.Manualslib.com manuals search engine

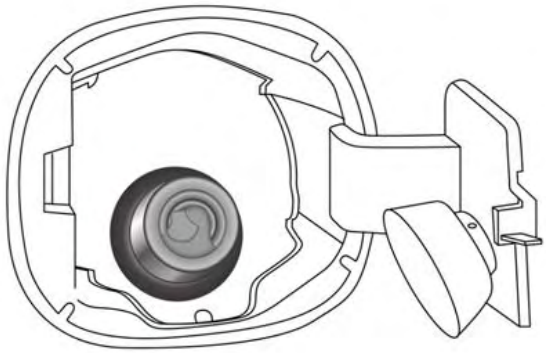

Fuel Nozzle Location

3. Insert the fuel nozzle into the filler pipe (the nozzle opens and holds the flap door while refueling) and start refueling – when the fuel nozzle "clicks" or shuts off, the fuel tank is full.
4. At the end of refueling, before removing the nozzle, wait at least 10 seconds to allow the fuel to flow within the tank.
5. Remove the fuel nozzle from the filler pipe and then close the fuel door.

Emergency Gas Can Refueling:

Most gas cans will not open the flapper door.

A funnel is provided to open the flapper door to allow emergency refueling with a gas can.

1. Retrieve the appropriate funnel from the storage area in the luggage compartment.
2. Insert funnel into same filler pipe opening as the fuel nozzle.

Downloaded from www.Manualslib.com manuals search engine

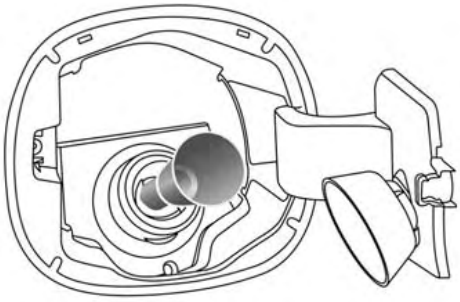

Emergency Fuel Fill Location

3. Ensure funnel is inserted fully to hold flapper door open.
4. Pour fuel into funnel opening.
5. Remove funnel from filler pipe, clean off prior to putting back in the storage area.

CAUTION!

To avoid fuel spillage and overfilling, do not "top off" the fuel tank after filling.

WARNING!

- **Never have any smoking materials lit in or near the vehicle when the fuel door is open or the tank is being filled.**
- **Never add fuel when the engine is running. This is in violation of most state and federal fire regulations and may cause the "Malfunction Indicator Light" to turn on.**
- **A fire may result if fuel is pumped into a portable container that is inside of a vehicle. You could be burned. Always place fuel containers on the ground while filling.**

Downloaded from www.Manualslib.com manuals search engine

TRAILER TOWING

Trailer towing with this vehicle is not recommended.

RECREATIONAL TOWING (BEHIND MOTORHOME, ETC.)

Towing This Vehicle Behind Another Vehicle

NOTE: This vehicle may be towed on a flatbed or vehicle trailer provided all four wheels are **OFF** the ground.

CAUTION!

- **DO NOT flat tow this vehicle. Damage to the drivetrain will result.**
- **Do not dolly tow this vehicle. Use of a towing dolly can cause significant damage to your vehicle. Damage from improper towing is not covered under the New Vehicle Limited Warranty.**
- **Towing this vehicle in violation of the above requirements can cause severe transmission damage. Damage from improper towing is not covered under the New Vehicle Limited Warranty.**

Downloaded from www.Manualslib.com manuals search engine

Towing Condition	Wheels OFF the Ground	Alfa Twin Clutch Transmission
Flat Tow	None	**NOT ALLOWED**
Dolly Tow	Front	**NOT ALLOWED**
	Rear	**NOT ALLOWED**
On Trailer	**All**	OK

Downloaded from www.Manualslib.com manuals search engine

WHAT TO DO IN EMERGENCIES

CONTENTS

- HAZARD WARNING FLASHER 224
- IF YOUR ENGINE OVERHEATS 224
- WHEEL AND TIRE TORQUE SPECIFICATIONS 225
  - Torque Specifications 226
- TIRE SERVICE KIT 228
- JUMP-STARTING 232
  - Preparations For Jump-Start 233
  - Jump-Starting Procedure 234
- FREEING A STUCK VEHICLE 236
- ENHANCED ACCIDENT RESPONSE SYSTEM 238
- FRONT TOW EYE USAGE 240
- FIRE EXTINGUISHER — IF EQUIPPED 243

Downloaded from www.Manualslib.com manuals search engine

HAZARD WARNING FLASHER

The Hazard Warning flasher switch is located on the center console.

Press the switch to turn on the Hazard Warning flasher. When the switch is activated, all directional turn signals will flash on and off to warn oncoming traffic of an emergency. Press the switch a second time to turn off the Hazard Warning flasher.

This is an emergency warning system and it should not be used when the vehicle is in motion. Use it when your vehicle is disabled and it is creating a safety hazard for other motorists.

When you must leave the vehicle to seek assistance, the Hazard Warning flasher will continue to operate even though the ignition is placed in the OFF position.

NOTE: With extended use the Hazard Warning flasher may wear down your battery.

IF YOUR ENGINE OVERHEATS

In any of the following situations, you can reduce the potential for overheating by taking the appropriate action.

- On the highways — slow down.
- In city traffic — while stopped, place the transmission in NEUTRAL, but do not increase engine idle speed.

NOTE: There are steps that you can take to slow down an impending overheat condition:

- If your air conditioner (A/C) is on, turn it off. The A/C system adds heat to the engine cooling system and turning the A/C off can help remove this heat.
- You can also turn the temperature control to maximum heat, the mode control to floor and the blower control to high. This allows the heater core to act as a supplement to the radiator and aids in removing heat from the engine cooling system.

Downloaded from www.Manualslib.com manuals search engine

CAUTION!

Driving with a hot cooling system could damage your vehicle. If the temperature gauge reads 240°F (116°C) or greater pull over and stop the vehicle. Idle the vehicle with the air conditioner turned off until the coolant temperature drops back into the normal range 200–230°F (93–110°C). The digital warning light may switch on (together with a message on the display) to indicate that the coolant temperature is too high; in this case, stop the engine and call for service.

WARNING!

You or others can be badly burned by hot engine coolant (antifreeze) or steam from your radiator. If you see or hear steam coming from under the hood, do not open the hood until the radiator has had time to cool. Never try to open a cooling system pressure cap when the radiator or coolant bottle is hot.

WHEEL AND TIRE TORQUE SPECIFICATIONS

Proper lug nut/bolt torque is very important to ensure that the wheel is properly mounted to the vehicle. Any time a wheel has been removed and reinstalled on the vehicle the lug nuts/bolts should be torqued using a properly calibrated torque wrench.

Downloaded from www.Manualslib.com manuals search engine

Torque Specifications

Lug Nut/Bolt Torque	**Lug Nut/ Bolt Size	Lug Nut/ Bolt Socket Size
72 Ft-Lbs (98 N·m)	M12 x 1.25	17 mm

**Use only Alfa Romeo recommended lug nuts/bolts and clean or remove any dirt or oil before tightening.

Inspect the wheel mounting surface prior to mounting the tire and remove any corrosion or loose particles.

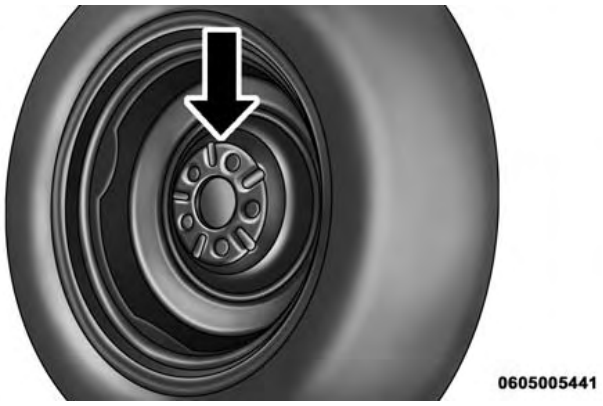

Wheel Mounting Surface

Tighten the lug nuts/bolts in a star pattern until each nut/bolt has been tightened twice.

Downloaded from www.Manualslib.com manuals search engine

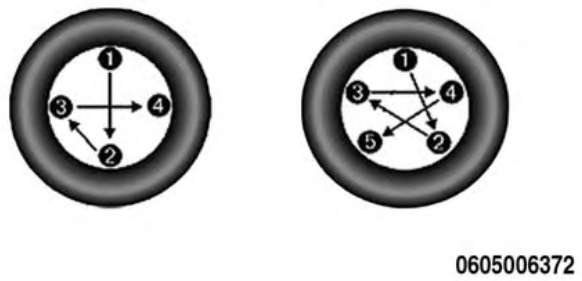

Torque Patterns

After 25 miles (40 km) check the lug nut/bolt torque to be sure that all the lug nuts/bolts are properly seated against the wheel.

WARNING!

To avoid the risk of forcing the vehicle off the jack, do not tighten the lug nuts fully until the vehicle has been lowered. Failure to follow this warning may result in personal injury.

Downloaded from www.Manualslib.com manuals search engine

TIRE SERVICE KIT

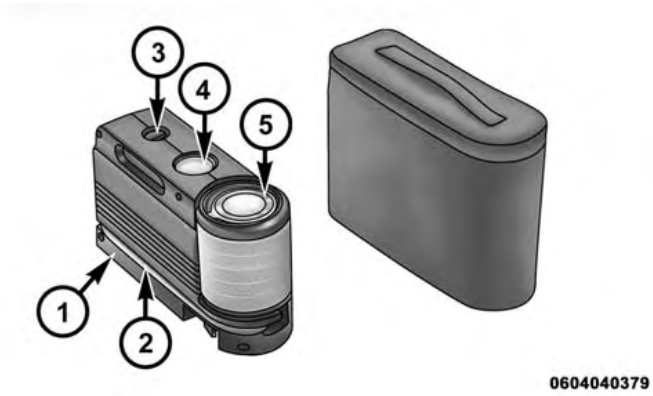

Tire Service Kit Components

1 — Power Plug (located on bottom side of Tire Service Kit)
2 — Sealant Hose (Clear)
3 — Power Button
4 — Pressure Gauge
5 — Sealant Bottle

If a tire is punctured, you can make a first emergency repair using the Tire Service Kit located in the rear storage area under the decklid.

Tire punctures of up to 1/4″ (6 mm) can be repaired; the kit can be used in all weather conditions. Do not remove the foreign object from the punctured tire, i.e., screw or nail.

Remove the Tire Service Kit from the vehicle, take it out from the bag and place it near the punctured tire. Screw the clear flexible filling tube to the tire valve.

WARNING!

- **Do not attempt to seal a tire on the side of the vehicle closest to traffic. Pull far enough off the road to avoid the danger of being hit when using the Tire Service Kit.**

(Continued)

Downloaded from www.Manualslib.com manuals search engine

WARNING! *(Continued)*

- Do not use Tire Service Kit or drive the vehicle under the following circumstances:
  - If the puncture in the tire tread is approximately 1/4" (6 mm) or larger.
  - If the tire has any sidewall damage.
  - If the tire has any damage from driving with extremely low tire pressure.
  - If the tire has any damage from driving on a flat tire.
  - If the wheel has any damage.
  - If you are unsure of the condition of the tire or the wheel.
- Keep Tire Service Kit away from open flames or heat source.

(Continued)

WARNING! *(Continued)*

- A loose Tire Service Kit thrown forward in a collision or hard stop could endanger the occupants of the vehicle. Always stow the Tire Service Kit in the place provided. Failure to follow these warnings can result in injuries that are serious or fatal to you, your passengers, and others around you.
- Take care not to allow the contents of Tire Service Kit to come in contact with hair, eyes, or clothing. Tire Service Kit sealant is harmful if inhaled, swallowed, or absorbed through the skin. It causes skin, eye, and respiratory irritation. Flush immediately with plenty of water if there is any contact with eyes or skin. Change clothing as soon as possible, if there is any contact with clothing.

(Continued)

Downloaded from www.Manualslib.com manuals search engine

WARNING! ***(Continued)***

- **Tire Service Kit Sealant solution contains latex. In case of an allergic reaction or rash, consult a physician immediately. Keep Tire Service Kit out of reach of children. If swallowed, rinse mouth immediately with plenty of water and drink plenty of water. Do not induce vomiting! Consult a physician immediately.**

Insert the power plug into the vehicle power outlet socket. Start the vehicle engine.

Press the Tire Service Kit power button to the "I" position. The electric compressor will be turned on, sealant and air will inflate the tire.

Minimum 26 psi (1.8 bar) of pressure should be reached within 20 minutes. If the pressure has not been reached turn off and remove the Tire Service Kit, drive the vehicle 30 feet (10 meters) back and forth, to better distribute the sealant inside the tire.

Attach the clear flexible filling tube of the compressor directly to the tire valve and repeat the inflation process.

When the correct pressure has been reached, start driving the vehicle to uniformly distribute the sealant inside the tire. After 10 minutes, stop and check the tire pressure. If the pressure is below 19 psi (1.3 bar), do not drive the vehicle, as the tire is too damaged, contact the nearest Authorized Dealer.

WARNING!

Tire Service Kit is not a permanent flat tire repair. Have the tire inspected and repaired or replaced after using Tire Service Kit. Do not exceed 65 mph (110 km/h) until the tire is repaired or replaced. Failure to follow this warning can result in injuries that are serious or fatal to you, your passengers, and others around you. Have the tire checked as soon as possible at an Authorized Dealer.

Downloaded from www.Manualslib.com manuals search engine

If the pressure is at 19 psi (1.3 bar) or above repeat the inflation process to reach the correct tire pressure and continue driving.

Peel off the warning label from the bottle and place it on the dashboard as a reminder to the driver that the tire has been treated with Tire Service Kit.

WARNING!

The metal end fitting from Power Plug may get hot after use, so it should be handled carefully.

NOTE: Replace the sealant canister prior to the expiration date at your Authorized Dealer.

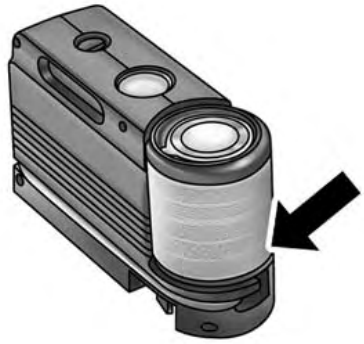

Tire Service Kit Expiration Date Location

WARNING!

Store the sealant canister in its special compartment, away from sources of heat.

Downloaded from www.Manualslib.com manuals search engine

JUMP-STARTING

If your vehicle has a discharged battery it can be jump-started using a set of jumper cables and a battery in another vehicle or by using a portable battery booster pack. Jump-starting can be dangerous if done improperly so please follow the procedures in this section carefully.

NOTE: When using a portable battery booster pack follow the manufacturer's operating instructions and precautions.

CAUTION!

Do not use a portable battery booster pack or any other booster source with a system voltage greater than 12 Volts or damage to the battery, starter motor, alternator or electrical system may occur.

WARNING!

Do not attempt jump-starting if the battery is frozen. It could rupture or explode and cause personal injury.

Downloaded from www.Manualslib.com manuals search engine

Preparations For Jump-Start

The battery in your vehicle is located on the left side of the engine compartment. To access the battery remove the protective cover.

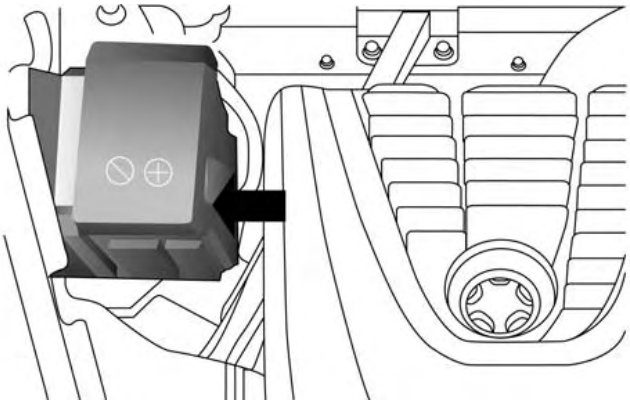

Battery Location

WARNING!

- **Remove any metal jewelry such as rings, watch bands and bracelets that could make an inadvertent electrical contact. You could be seriously injured.**
- **Batteries contain sulfuric acid that can burn your skin or eyes and generate hydrogen gas which is flammable and explosive. Keep open flames or sparks away from the battery.**

NOTE: Be sure that the disconnected ends of the cables do not touch while still connected to the other vehicle.

1. Firmly apply the parking brake, and turn the ignition OFF.
2. Turn off the heater, radio, and all unnecessary electrical accessories.
3. To remove the protective cover off the battery, pull upward on the cover.

Downloaded from www.Manualslib.com manuals search engine

4. If using another vehicle to jump-start the battery, park the vehicle within the jumper cables reach, set the parking brake and make sure the ignition is OFF.

WARNING!

Do not allow vehicles to touch each other as this could establish a ground connection and personal injury could result.

Jump-Starting Procedure

WARNING!

Failure to follow this jump-starting procedure could result in personal injury or property damage due to battery explosion.

CAUTION!

Failure to follow these procedures could result in damage to the charging system of the booster vehicle or the discharged vehicle.

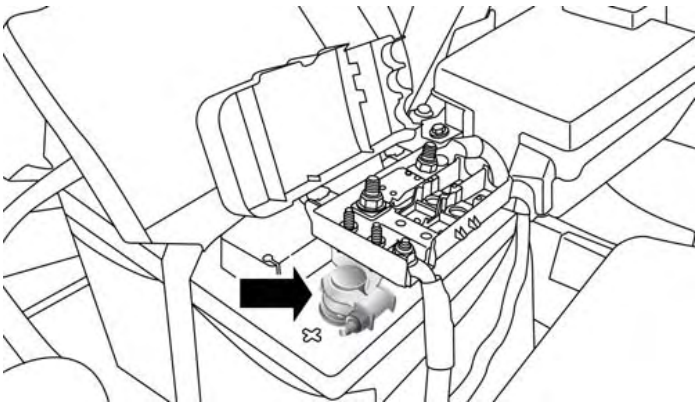

Positive (+) Battery Post

Downloaded from www.Manualslib.com manuals search engine

Connecting The Jumper Cables

1. Connect the positive **(+)** end of the jumper cable to the positive **(+)** post of the vehicle with the discharged battery.
2. Connect the opposite end of the positive **(+)** jumper cable to the positive **(+)** post of the booster battery.
3. Connect the negative end **(-)** of the jumper cable to the negative **(-)** post of the booster battery.
4. Connect the opposite end of the negative **(-)** jumper cable to a good engine ground of the vehicle with the discharged battery (exposed metal part of the engine) away from the battery and the fuel injection system.

WARNING!

Do not connect the jumper cable to the negative (-) post of the discharged battery. The resulting electrical spark could cause the battery to explode and could result in personal injury. Only use the specific ground point, do not use any other exposed metal parts.

5. Start the engine in the vehicle that has the booster battery, let the engine idle a few minutes, and then start the engine in the vehicle with the discharged battery.
6. Once the engine is started, remove the jumper cables in the reverse sequence:

Downloaded from www.Manualslib.com manuals search engine

Disconnecting The Jumper Cables

1. Disconnect the negative **(-)** jumper cable from the engine **(-)** ground of the vehicle with the discharged battery.
2. Disconnect the negative end **(-)** of the jumper cable from the negative **(-)** post of the booster battery.
3. Disconnect the opposite end of the positive **(+)** jumper cable from the positive **(+)** post of the booster battery.
4. Disconnect the positive **(+)** end of the jumper cable from the positive **(+)** post of the vehicle with the discharged battery.

If frequent jump-starting is required to start your vehicle you should have the battery and charging system inspected at your authorized dealer.

CAUTION!

Accessories plugged into the vehicle power outlets draw power from the vehicle's battery, even when not in use (i.e., cellular phones, etc.). Eventually, if plugged in long enough without engine operation, the vehicle's battery will discharge sufficiently to degrade battery life and/or prevent the engine from starting.

FREEING A STUCK VEHICLE

If your vehicle becomes stuck in mud, sand, or snow, it can often be moved using a rocking motion. Turn the steering wheel right and left to clear the area around the front wheels. Then shift back and forth between DRIVE and REVERSE while gently pressing the accelerator pedal. Use the least amount of accelerator pedal pressure that will maintain the rocking motion, without spinning the wheels or racing the engine.

Downloaded from www.Manualslib.com manuals search engine

CAUTION!

Racing the engine or spinning the wheels may lead to transmission overheating and failure. Allow the engine to idle with the transmission in NEUTRAL for at least one minute after every five rocking-motion cycles. This will minimize overheating and reduce the risk of transmission failure during prolonged efforts to free a stuck vehicle.

NOTE: To turn the ESC off, move the selector from the Normal position to the Dynamic position and hold it for a few moments. The Race configuration will be set when the graph of the longitudinal and transversal G accelerations is shown in the instrument panel. At this time the ESC has been turned off. Once the vehicle has been freed, The selector may be moved back to the desired mode.

CAUTION!

- **When "rocking" a stuck vehicle by shifting between DRIVE and REVERSE, do not spin the wheels faster than 15 mph (24 km/h), or drivetrain damage may result.**
- **Revving the engine or spinning the wheels too fast may lead to transmission overheating and failure. It can also damage the tires. Do not spin the wheels above 30 mph (48 km/h) while in gear (no transmission shifting occurring).**

Downloaded from www.Manualslib.com manuals search engine

WARNING!

Fast spinning tires can be dangerous. Forces generated by excessive wheel speeds may cause damage, or even failure, of the axle and tires. A tire could explode and injure someone. Do not spin your vehicle's wheels faster than 30 mph (48 km/h) or for longer than 30 seconds continuously without stopping when you are stuck and do not let anyone near a spinning wheel, no matter what the speed.

ENHANCED ACCIDENT RESPONSE SYSTEM

In the event of an impact, if the communication network remains intact, and the power remains intact, depending on the nature of the event the ORC will determine whether to have the Enhanced Accident Response System perform the following functions:

- Cut off fuel to the engine.
- Flash hazard lights as long as the battery has power or until the ignition key is turned off.
- Turn on the interior lights, which remain on as long as the battery has power or until the ignition key is removed.
- Unlock the doors automatically.

After the event occurs, when the system is active, in addition to the message Fuel Cutoff See Handbook, a specific soft telltale is displayed.

Carefully check the vehicle for fuel leaks in the engine compartment and on the ground near the engine compartment and fuel tank before resetting the system and starting the engine.

System Reset Procedure

Depending on the nature of the event the left and right turn signal lights, located in the instrument panel cluster, may both be blinking and will continue to blink until the ignition switch is turned to the OFF position.

Downloaded from www.Manualslib.com manuals search engine

In order to move your vehicle to the side of the road you must follow the system reset procedure.

Customer Action	Customer Will See
1. Turn ignition OFF. (Turn Signal Switch Must be placed in Neutral State).	—
2. Turn ignition ON.	Left Turn Light is OFF. Right Turn Light BLINKS.
3. Turn Right Turn Signal Switch ON.	Right Turn Light is ON SOLID. Left Turn Light BLINKS.
4. Turn Left Turn Signal Switch ON.	Left Turn Light is ON SOLID. Right Turn Light BLINKS.
5. Turn Right Turn Signal Switch ON.	Right Turn Light is ON SOLID. Left Turn Light BLINKS.
6. Turn Left Turn Signal Switch ON.	Left Turn Light is ON SOLID. Right Turn Light is ON SOLID.
7. Turn Left Turn Signal Switch OFF. (Turn Signal Switch Must be placed in Neutral State).	Left Turn Light is OFF. Right Turn Light is OFF.
8. Turn ignition OFF.	System is now reset and the engine may be started.
9. Turn ignition ON.	—

Turn Hazard Flashers OFF (Manually).

Downloaded from www.Manualslib.com manuals search engine

If a reset procedure step is not completed within 60 seconds, then the turn signal lights will turn off and the reset procedure must be performed again in order to be successful.

FRONT TOW EYE USAGE

Your vehicle is equipped with a tow eye that can be used to tow a disabled vehicle.

The front tow eye receptacle is located on the lower right side of the front fascia.

To install the tow eye, remove the rubber plug and thread the tow eye into the receptacle.

NOTE: The front tow eye is found stored inside the Tire Service Kit storage bag.

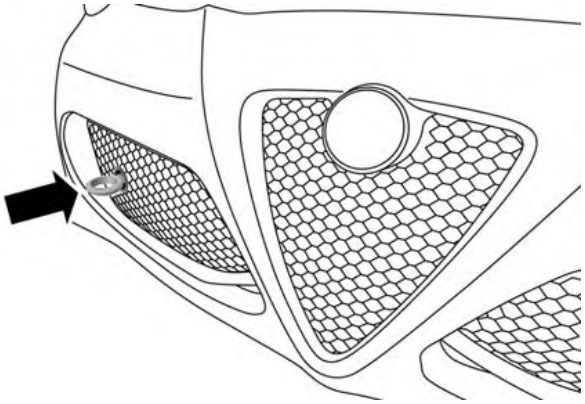

Front Tow Eye Installed

When using a tow eye be sure to follow the "Tow Eye Usage Precautions" in this section.

Downloaded from www.Manualslib.com manuals search engine

Tow Eye

Tow Eye Usage Precautions

NOTE:

- Ensure that the tow eye is properly seated and secure in the mounting receptacle.
- The tow eye is recommended for use with an approved tow bar and or rope.
- Do not use the tow eye to pull the vehicle onto a flatbed truck.
- Do not use the tow eye to free a stuck vehicle. Refer to "Freeing A Stuck Vehicle" in this section for further information.

WARNING!

Stand clear of vehicles when pulling with tow eyes.

- **Do not use a chain with a tow eye. Chains may break, causing serious injury or death.**
- **Do not use a tow strap with a tow eye. Tow straps may break or become disengaged, causing serious injury or death.**
- **Failure to follow proper tow eye usage may cause components to break resulting in serious injury or death.**

Downloaded from www.Manualslib.com manuals search engine

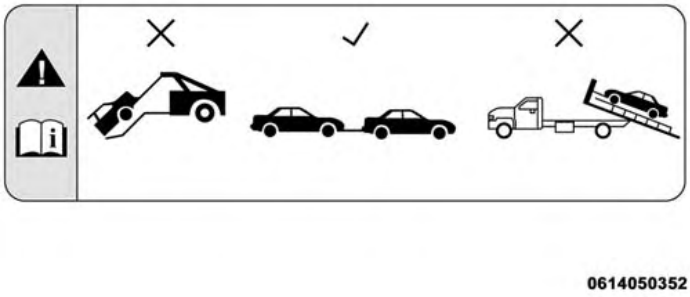

Tow Eye Warning Label

CAUTION!

- **The tow eye must be used exclusively for roadside assistance operations. Only use the tow eye with an appropriate device in accordance with the highway**

(Continued)

CAUTION! ***(Continued)***

code (a rigid bar or rope) to flat tow the vehicle for a short distance to the nearest service location.

- **Tow eyes MUST NOT be used to tow vehicles off the road or where there are obstacles.**
- **In compliance with the above conditions, towing with a tow eye must take place with two vehicles (one towing, the other towed) aligned as much as possible along the same center line. Damage to your vehicle may occur if these guidelines are not followed.**

Downloaded from www.Manualslib.com manuals search engine

FIRE EXTINGUISHER — IF EQUIPPED

The fire extinguisher is located under the dashboard in front of the passenger side seat.

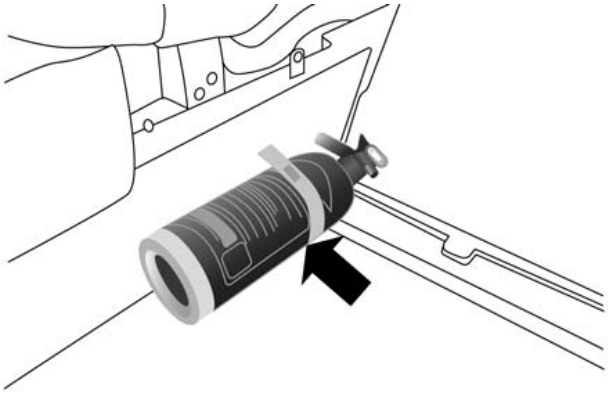

Fire Extinguisher

Downloaded from www.Manualslib.com manuals search engine

Downloaded from www.Manualslib.com manuals search engine

MAINTAINING YOUR VEHICLE

CONTENTS

- ENGINE COMPARTMENT — 1.750 TURBO . . .247
- ONBOARD DIAGNOSTIC SYSTEM — OBD II . .248
- REPLACEMENT PARTS 248
- DEALER SERVICE 249
- MAINTENANCE PROCEDURES 249
  - Engine Oil 250
  - Engine Oil Filter 252
  - Engine Air Cleaner Filter 252
  - Engine Cover 253
  - Maintenance-Free Battery 254
  - Air Conditioner Maintenance 255
  - Body Lubrication 256
  - Wiper Blades 257
  - Windshield Washer Nozzles 259
  - Adding Washer Solvent 260
  - Exhaust System 263
  - Cooling System 265
  - Brake System 271
  - Alfa Twin Clutch Transmission 275

Downloaded from www.Manualslib.com manuals search engine

- Appearance Care And Protection From Corrosion 277

■ FUSES 284

- Engine Compartment Fuses 285
- Dashboard Fuse Box 288

■ VEHICLE STORAGE 289

■ REPLACEMENT BULBS 289

■ BULB REPLACEMENT 291

- Front Light Clusters 291
- Front Side Marker 296
- Rear Light Clusters 297
- Direction Indicators 297
- Tail Lights/Brake Lights 298
- Reversing Light 298
- Third Brake Lights 299
- License Plate Lights 300
- Roof Light 301
- Luggage Compartment Roof Light 302

■ FLUID CAPACITIES 303

■ FLUIDS, LUBRICANTS AND GENUINE PARTS 304

- Engine 304
- Chassis 305

Downloaded from www.Manualslib.com manuals search engine

ENGINE COMPARTMENT — 1.750 TURBO

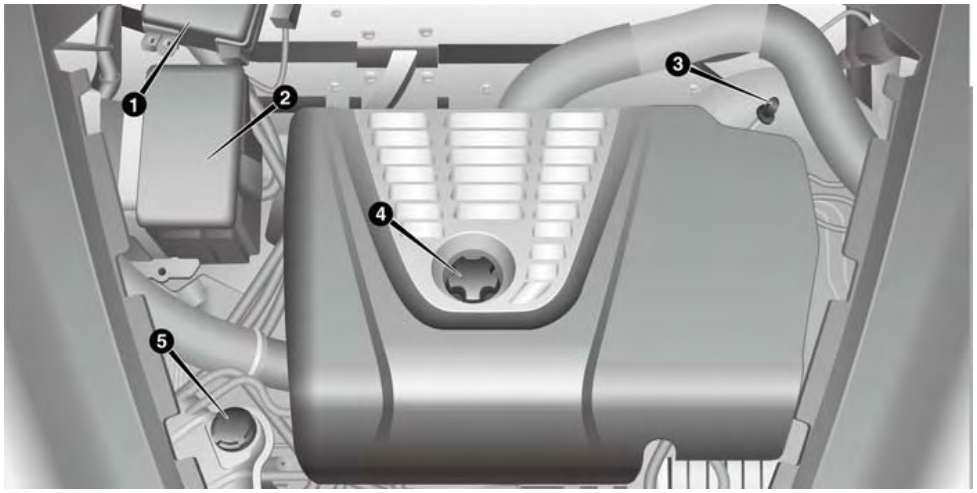

1 — Fuse Box
2 — Battery
3 — Engine Oil Dip Stick
4 — Engine Oil Fill
5 — Coolant Reservoir

Downloaded from www.Manualslib.com manuals search engine

ONBOARD DIAGNOSTIC SYSTEM — OBD II

Your vehicle is equipped with a sophisticated onboard diagnostic system called OBD II. This system monitors the performance of the emissions, engine, and Alfa Twin Clutch Transmission control systems. When these systems are operating properly, your vehicle will provide excellent performance and fuel economy, as well as engine emissions well within current government regulations.

If any of these systems require service, the OBD II system will turn on the "Malfunction Indicator Light (MIL)." It will also store diagnostic codes and other information to assist your service technician in making repairs. Although your vehicle will usually be drivable and not need towing, see your authorized dealer for service as soon as possible.

CAUTION!

- **Prolonged driving with the MIL on could cause further damage to the emission control system. It could also affect fuel economy and driveability. The vehicle must be serviced before any emissions tests can be performed.**
- **If the MIL is flashing while the engine is running, severe catalytic converter damage and power loss will soon occur. Immediate service is required.**

REPLACEMENT PARTS

Use of genuine parts for normal/scheduled maintenance and repairs is highly recommended to ensure the designed performance. Damage or failures caused by the use of parts which are not quality-equivalent to genuine parts for maintenance and repairs will not be covered by the manufacturer's warranty.

Downloaded from www.Manualslib.com manuals search engine

DEALER SERVICE

Your authorized dealer has the qualified service personnel, special tools, and equipment to perform all service operations in an expert manner. Service Manuals are available which include detailed service information for your vehicle. Refer to these Service Manuals before attempting any procedure yourself.

NOTE: Intentional tampering with emissions control systems may void your warranty and could result in civil penalties being assessed against you.

WARNING!

You can be badly injured working on or around a motor vehicle. Only do service work for which you have the knowledge and the proper equipment. If you have any doubt about your ability to perform a service job, take your vehicle to a competent mechanic.

MAINTENANCE PROCEDURES

The pages that follow contain the **required** maintenance services determined by the engineers who designed your vehicle.

Besides those maintenance items specified in the fixed maintenance schedule, there are other components which may require servicing or replacement in the future.

CAUTION!

- **Failure to properly maintain your vehicle or perform repairs and service when necessary could result in more costly repairs, damage to other components or negatively impact vehicle performance. Immediately have potential malfunctions examined by an authorized dealer or qualified repair center.**

(Continued)

Downloaded from www.Manualslib.com manuals search engine

CAUTION! ***(Continued)***

- **Your vehicle has been built with improved fluids that protect the performance and durability of your vehicle and also allow extended maintenance intervals. Do not use chemical flushes in these components as the chemicals can damage your engine, transmission, or air conditioning. Such damage is not covered by the New Vehicle Limited Warranty. If a flush is needed because of component malfunction, use only the specified fluid for the flushing procedure.**

Engine Oil

Checking Oil Level

To assure proper engine lubrication, the engine oil must be maintained at the correct level. Check the oil level at regular intervals. The best time to check the engine oil level is before starting the engine after it has sat overnight.

Do not check oil level when the engine is warm. Checking engine oil level when the engine is warm will give you an incorrect reading.

Checking the oil while the vehicle is on level ground, and has sat overnight, will improve the accuracy of the oil level readings. Maintain the oil level between the range markings on the dipstick. The safe range is indicated by a crosshatch zone. Adding 1 quart of oil when the reading is at the low end of the indicated range will result in the oil level at the full end of the indicator range.

Downloaded from www.Manualslib.com manuals search engine

CAUTION!

Do not overfill the engine with oil. Overfilling the engine with oil will cause oil aeration, which can lead to loss of oil pressure and an increase in oil temperature. This loss of oil pressure and increased oil temperature could damage your engine.

Change Engine Oil

The oil change indicator system will remind you that it is time to take your vehicle in for scheduled maintenance. Refer to the "Maintenance Schedule" for further information.

NOTE: The actual interval for changing the oil and replacing the engine oil filter depends on the vehicle usage conditions and is signalled by the warning light or message (if present) on the instrument panel or every 12 months.

Engine Oil Selection

For best performance and maximum protection for turbocharged engines under all types of operating conditions, the manufacturer recommends synthetic engine oils that are API Certified and meet the requirements of Chrysler Material Standard MS-12991.

Engine Oil Viscosity — 1.750 Turbo Engine (SAE Grade)

SAE 5W-40 full synthetic engine oil is recommended for all operating temperatures. This engine oil improves low temperature starting and vehicle fuel economy.

Lubricants which do not have both the engine oil certification mark and the correct SAE viscosity grade number should not be used.

The engine oil filler cap also shows the recommended engine oil viscosity for your engine. For information on engine oil filler cap location, refer to "Engine Compartment" in "Maintaining Your Vehicle" for further information.

Downloaded from www.Manualslib.com manuals search engine

Materials Added To Engine Oil

The manufacturer strongly recommends against the addition of any additives (other than leak detection dyes) to the engine oil. Engine oil is an engineered product and its performance may be impaired by supplemental additives.

Disposing Of Used Engine Oil And Oil Filters

Care should be taken in disposing of used engine oil and oil filters from your vehicle. Used oil and oil filters, indiscriminately discarded, can present a problem to the environment. Contact your authorized dealer, service station or governmental agency for advice on how and where used oil and oil filters can be safely discarded in your area.

Engine Oil Filter

The engine oil filter should be replaced with a new filter at every engine oil change.

Engine Oil Filter Selection

This manufacturer's engines have a full-flow type disposable oil filter. Use a filter of this type for replacement. The quality of replacement filters varies considerably. Only high quality filters should be used to assure most efficient service. MOPAR® engine oil filters are high quality oil filters and are recommended.

Engine Air Cleaner Filter

Refer to the "Maintenance Schedule" for the proper maintenance intervals.

Downloaded from www.Manualslib.com manuals search engine

WARNING!

The air induction system (air cleaner, hoses, etc.) can provide a measure of protection in the case of engine backfire. Do not remove the air induction system (air cleaner, hoses, etc.) unless such removal is necessary for repair or maintenance. Make sure that no one is near the engine compartment before starting the vehicle with the air induction system (air cleaner, hoses, etc.) removed. Failure to do so can result in serious personal injury.

Engine Air Cleaner Filter Selection

The quality of replacement engine air cleaner filters varies considerably. Only high quality filters should be used to assure most efficient service. MOPAR® engine air cleaner filters are a high quality filter and are recommended.

Engine Cover

To avoid possible damage to the engine cover, please disconnect each of the four mounting studs by pulling the engine cover upward, and then lift off the complete cover. Tilting the engine cover when one or more studs are still engaged will lead to premature failure of the couplers.

To reassemble the cover back onto the engine, first make sure it is properly aligned, the oil cap is centered, and that all four studs are lined up with their couplers. Then gently push on the four corners of the engine cover to snap the stud back into position.

No tools are required to remove or reassemble the engine cover.

Downloaded from www.Manualslib.com manuals search engine

Maintenance-Free Battery

Your vehicle is equipped with a maintenance-free battery. You will never have to add water, nor is periodic maintenance required.

WARNING!

- **Battery fluid is a corrosive acid solution and can burn or even blind you. Do not allow battery fluid to contact your eyes, skin, or clothing. Do not lean over a battery when attaching clamps. If acid splashes in eyes or on skin, flush the area immediately with large amounts of water. Refer to "Jump-Starting Procedures" in "What To Do In Emergencies" for further information.**
- **Battery gas is flammable and explosive. Keep flame or sparks away from the battery. Do not use a booster battery or any other booster source with**

(Continued)

WARNING! ***(Continued)***

an output greater than 12 Volts. Do not allow cable clamps to touch each other.

- **Battery posts, terminals, and related accessories contain lead and lead compounds. Wash hands after handling.**
- **The battery in this vehicle has a vent hose that should not be disconnected and should only be replaced with a battery of the same type (vented).**

CAUTION!

- **It is essential when replacing the cables on the battery that the positive cable is attached to the positive post and the negative cable is attached to the negative post. Battery posts are marked positive (+) and negative (-) and are identified on the**

(Continued)

Downloaded from www.Manualslib.com manuals search engine

CAUTION! ***(Continued)***

battery case. Cable clamps should be tight on the terminal posts and free of corrosion.

- **If a "fast charger" is used while the battery is in the vehicle, disconnect both vehicle battery cables before connecting the charger to the battery. Do not use a "fast charger" to provide starting voltage.**

Air Conditioner Maintenance

For best possible performance, your air conditioner should be checked and serviced by an authorized dealer at the start of each warm season. This service should include cleaning of the condenser fins and a performance test. Drive belt tension should also be checked at this time.

NOTE:

- Use only refrigerants and compressor lubricants approved by the manufacturer for your air conditioning system. Some unapproved refrigerants are flammable and can explode, injuring you. Other unapproved refrigerants or lubricants can cause the system to fail, requiring costly repairs. Refer to Warranty Information Book, located on the USB card, for further warranty information.
- The air conditioning system contains refrigerant under high pressure. To avoid risk of personal injury or damage to the system, adding refrigerant or any repair requiring lines to be disconnected should be done by an experienced technician.

Downloaded from www.Manualslib.com manuals search engine

CAUTION!

Do not use chemical flushes in your air conditioning system as the chemicals can damage your air conditioning components. Such damage is not covered by the New Vehicle Limited Warranty.

Refrigerant Recovery And Recycling HFO 1234yf

HFO 1234yf Air Conditioning Refrigerant is a hydrofluorocarbon (HFC) that is endorsed by the Environmental Protection Agency and is an ozone-saving product with a low GWP (Global Warming Potential). However, the manufacturer recommends that air conditioning service be performed by authorized dealer or other service facilities using recovery and recycling equipment.

NOTE: Use only manufacturer approved A/C system PAG compressor oil, and refrigerants.

Body Lubrication

Locks and all body pivot points, including such items as seat tracks, door hinge pivot points and rollers, liftgate, tailgate, decklid, sliding doors and hood hinges, should be lubricated periodically with a lithium based grease, such as MOPAR® Spray White Lube to assure quiet, easy operation and to protect against rust and wear. Prior to the application of any lubricant, the parts concerned should be wiped clean to remove dust and grit; after lubricating excess oil and grease should be removed. Particular attention should also be given to hood latching components to ensure proper function. When performing other underhood services, the hood latch, release mechanism and safety catch should be cleaned and lubricated.

The external lock cylinders should be lubricated twice a year, preferably in the Fall and Spring. Apply a small amount of a high quality lubricant, such as MOPAR® Lock Cylinder Lubricant directly into the lock cylinder.

Downloaded from www.Manualslib.com manuals search engine

Wiper Blades

Clean the rubber edges of the wiper blades and the windshield and rear window periodically with a sponge or soft cloth and a mild nonabrasive cleaner. This will remove accumulations of salt, waxes, or road film, and help reduce streaking and smearing.

Operation of the wipers on dry glass for long periods may cause deterioration of the wiper blades. Always use washer fluid when using the wipers to remove salt or dirt from a dry windshield or rear window.

Avoid using the wiper blades to remove frost or ice from the windshield or rear window. Make sure that they are not frozen to the glass before turning them on to avoid damaging the blade. Keep the blade rubber out of contact with petroleum products such as engine oil, gasoline, etc.

NOTE: Life expectancy of wiper blades varies depending on geographical area and frequency of use. Poor performance of blades may be present with chattering, marks, water lines or wet spots. If any of these conditions are present, clean the wiper blades or replace as necessary.

Blade Lifting

If it is necessary to lift the blade from the windshield (In the event of snow or blade replacement) Proceed as directed:

1. Rotate the end of the multifunction lever to the OFF position.
2. Turn the ignition to the MAR-ON position then to STOP.

Downloaded from www.Manualslib.com manuals search engine

Windshield Wiper/Washer Lever

3. After turning the ignition to the STOP, within two minutes move the right stalk upward, into the unstable ("anti-panic") position, for at least half of a second. The windshield wiper then executes part of a stroke; at each command, approximately 1/3 of a normal wiper stroke is triggered.

NOTE: The previous operation can be repeated up to three times. In order to move the blades to the most suitable position.

4. Lift the blade from the windshield and proceed with the required operation.
5. Carefully lower the blade, bringing it back in contact with the windshield.
6. Bring the blade to the initial rest position, turning the ignition to MAR-ON.

NOTE: Do not operate the screen wiper with the blades lifted from the windshield.

Front Wiper Blade Removal/Installation

1. Lift the front wiper arm upward to raise the wiper blade off of the windshield.
2. Press the release button on the arm of the wiper blade.

Downloaded from www.Manualslib.com manuals search engine

3. Push the wiper blade up the and remove it.

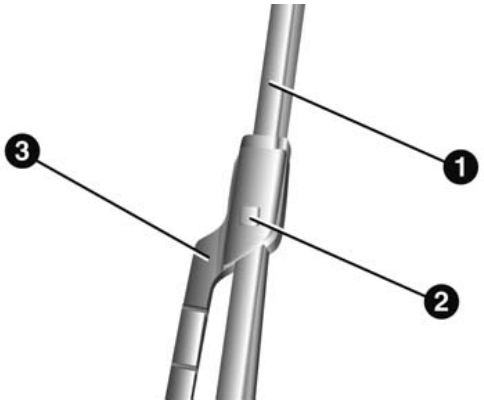

1 — Wiper Blade
2 — Release Button
3 — Wiper Arm

4. Install the wiper blade and firmly press the wiper blade until it snaps into place.

Windshield Washer Nozzles

The windshield washer nozzles are adjustable. They originally adjusted at the factory. Should it be necessary to adjust them again, contact your authorized Alfa Romeo Dealer.

If there is not jet of fluid, first check that there is fluid in the washer reservoir. Refer to "Adding Washer Solvent" in this section for further information.

Then check that the nozzle holes are not clogged; use a suitable tool such as a needle to unblock them if necessary.

Downloaded from www.Manualslib.com manuals search engine

Adding Washer Solvent

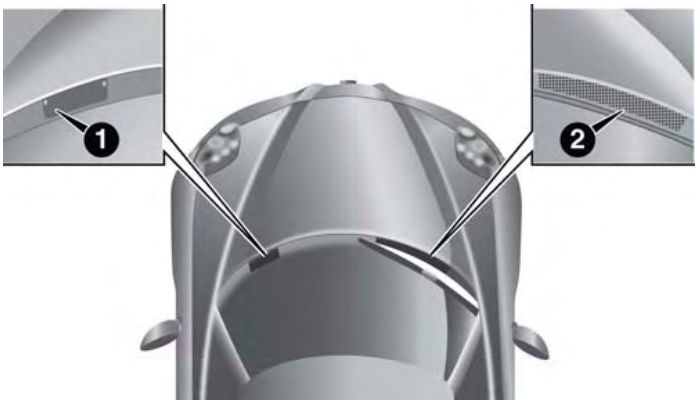

1 — Brake Fluid Protection Panel
2 — Washer Solvent Protection Panel

To check the windshield washer solvent level, proceed as follows:

1. To avoid any interference during the procedure, lift the windshield wiper blade.
2. Loosen the four screws using the supplied screwdriver. Remove the washer solvent protection panel.

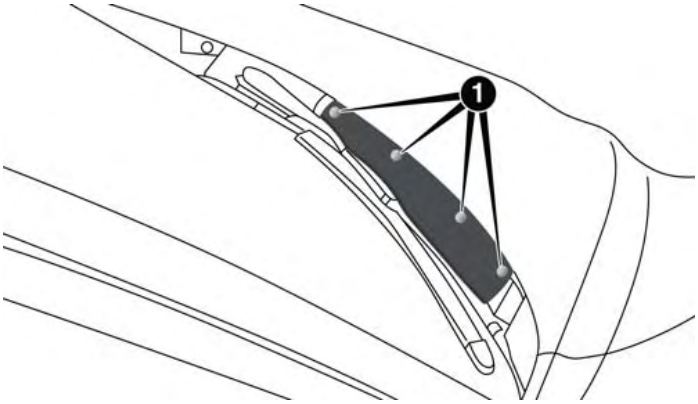

1 — Screw Locations

3. Release the plug from the opening.

Downloaded from www.Manualslib.com manuals search engine

4. Leaving the plug close to the opening, put a finger on the central hole in the plug and remove it: the level can be seen on the control pipe due to capillarity.

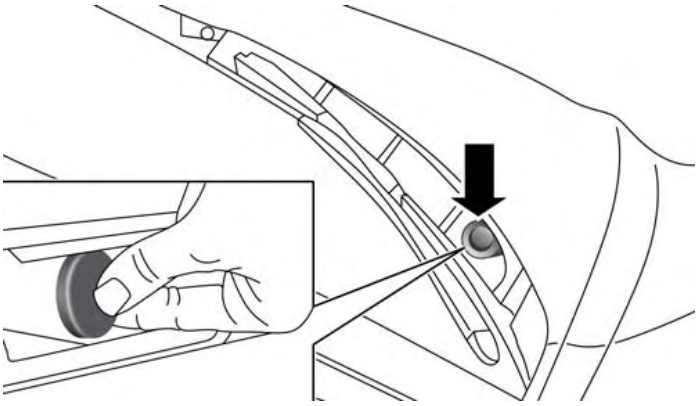

Washer Solvent Plug

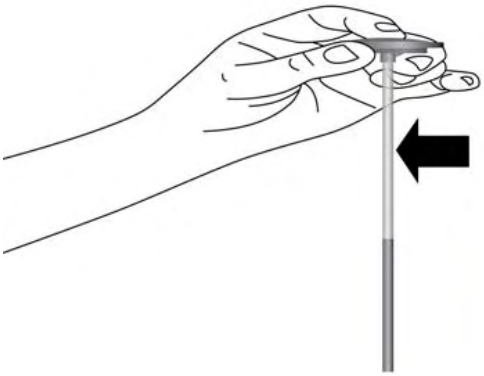

Washer Solvent Dip Stick

5. After the check, reinsert the plug with the control pipe in the initial position.
6. Reposition the washer solvent protection panel and tighten the four self-tapping screws.

Downloaded from www.Manualslib.com manuals search engine

If the level is not sufficient, namely if there is no washer solvent inside the pipe, proceed as follows:

1. To avoid any interference during the procedure, lift the windshield wiper blade.
2. Loosen the four screws using the supplied screwdriver. Remove the washer solvent protection panel.
3. Take the black funnel for topping up the windshield washer solvent and its extension pipe from the service kit in the luggage compartment.
4. Take out the plug with the solvent control pipe through the washer solvent protection panel.
5. Introduce the funnel and its extension pipe in the reservoir neck and top up.

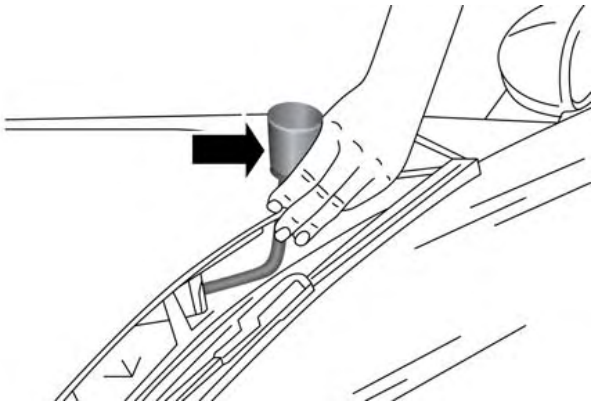

Washer Solvent Fill Funnel

6. After topping up, remove the funnel with the extension pipe.
7. Refit the plug with the dipstick.
8. Reposition the washer solvent protection panel and tighten the four self-tapping screws.

Downloaded from www.Manualslib.com manuals search engine

WARNING!

Commercially available windshield washer solvents are flammable. They could ignite and burn you. Care must be exercised when filling or working around the washer solution.

Exhaust System

The best protection against carbon monoxide entry into the vehicle body is a properly maintained engine exhaust system.

If you notice a change in the sound of the exhaust system; or if the exhaust fumes can be detected inside the vehicle; or when the underside or rear of the vehicle is damaged; have an authorized technician inspect the complete exhaust system and adjacent body areas for broken, damaged, deteriorated, or mispositioned parts. Open seams or loose connections could permit exhaust fumes to seep into the passenger compartment. In addition, have the exhaust system inspected each time the vehicle is raised for lubrication or oil change. Replace as required.

WARNING!

- **Exhaust gases can injure or kill. They contain carbon monoxide (CO), which is colorless and odorless. Breathing it can make you unconscious and can eventually poison you. To avoid breathing CO, refer to "Safety Tips/Exhaust Gas" in "Things To Know Before Starting Your Vehicle" for further information.**
- **A hot exhaust system can start a fire if you park over materials that can burn. Such materials might be grass or leaves coming into contact with your exhaust system. Do not park or operate your vehicle in areas where your exhaust system can contact anything that can burn.**

Downloaded from www.Manualslib.com manuals search engine

CAUTION!

- **The catalytic converter requires the use of unleaded fuel only. Leaded gasoline will destroy the effectiveness of the catalyst as an emissions control device and may seriously reduce engine performance and cause serious damage to the engine.**
- **Damage to the catalytic converter can result if your vehicle is not kept in proper operating condition. In the event of engine malfunction, particularly involving engine misfire or other apparent loss of performance, have your vehicle serviced promptly. Continued operation of your vehicle with a severe malfunction could cause the converter to overheat, resulting in possible damage to the converter and vehicle.**

Under normal operating conditions, the catalytic converter will not require maintenance. However, it is important to keep the engine properly tuned to assure proper catalyst operation and prevent possible catalyst damage.

NOTE: Intentional tampering with emissions control systems can result in civil penalties being assessed against you.

In unusual situations involving grossly malfunctioning engine operation, a scorching odor may suggest severe and abnormal catalyst overheating. If this occurs, stop the vehicle, turn off the engine and allow it to cool. Service, including a tune-up to manufacturer's specifications, should be obtained immediately.

Downloaded from www.Manualslib.com manuals search engine

To minimize the possibility of catalytic converter damage:

- Do not shut off the engine or interrupt the ignition, when the transmission is in gear and the vehicle is in motion.
- Do not try to start the engine by pushing or towing the vehicle.
- Do not idle the engine with any spark plug wires disconnected or removed, such as when diagnostic testing, or for prolonged periods during very rough idle or malfunctioning operating conditions.

Cooling System

WARNING!

- **When working near the radiator cooling fan, disconnect the fan motor lead or turn the ignition switch to the OFF position. The fan is temperature controlled and can start at any time the ignition switch is in the ON position.**
- **You or others can be badly burned by hot engine coolant (antifreeze) or steam from your radiator. If you see or hear steam coming from under the hood, do not open the hood until the radiator has had time to cool. Never try to open a cooling system pressure cap when the radiator is hot.**

Downloaded from www.Manualslib.com manuals search engine

Coolant Checks

Check engine coolant (antifreeze) protection every 12 months (before the onset of freezing weather, where applicable). If the engine coolant (antifreeze) is dirty or rusty in appearance, the system should be drained, flushed and refilled with fresh engine coolant (antifreeze). Check the front of the A/C condenser for any accumulation of bugs, leaves, etc. If dirty, clean by gently spraying water from a garden hose vertically down the face of the condenser.

Cooling System — Drain, Flush And Refill

NOTE: Some vehicles require special tools to add coolant properly. Failure to fill these systems properly could lead to severe internal engine damage. If any coolant is needed to be added to the system please contact your local authorized dealer.

If the engine coolant (antifreeze) is dirty or contains visible sediment, have an authorized dealer clean and flush with OAT coolant (antifreeze) (conforming to MS.90032).

Refer to the "Maintenance Schedule" for the proper maintenance intervals.

Selection Of Coolant

Refer to "Fluids, Lubricants, and Genuine Parts" in "Maintaining Your Vehicle" for further information.

Downloaded from www.Manualslib.com manuals search engine

CAUTION!

- **Mixing of engine coolant (antifreeze) other than specified Organic Additive Technology (OAT) engine coolant (antifreeze), may result in engine damage and may decrease corrosion protection. Organic Additive Technology (OAT) engine coolant is different and should not be mixed with Hybrid Organic Additive Technology (HOAT) engine coolant (antifreeze) or any "globally compatible" coolant (antifreeze). If a non-OAT engine coolant (antifreeze) is introduced into the cooling system in an emergency, the cooling system will need to be drained, flushed, and refilled with fresh OAT coolant (conforming to MS.90032), by an authorized dealer as soon as possible.**
- **Do not use water alone or alcohol-based engine coolant (antifreeze) products. Do not use additional**

(Continued)

CAUTION! ***(Continued)***

rust inhibitors or antirust products, as they may not be compatible with the radiator engine coolant and may plug the radiator.
- **This vehicle has not been designed for use with propylene glycol-based engine coolant (antifreeze). Use of propylene glycol-based engine coolant (antifreeze) is not recommended.**

Adding Coolant

Your vehicle has been built with an improved engine coolant (OAT coolant conforming to MS.90032) that allows extended maintenance intervals. This engine coolant (antifreeze) can be used up to ten years or 150,000 miles (240,000 km) before replacement. To prevent reducing this extended maintenance period, it is important that you use the same engine coolant (OAT coolant conforming to MS.90032) throughout the life of your vehicle.

Downloaded from www.Manualslib.com manuals search engine

Please review these recommendations for using Organic Additive Technology (OAT) engine coolant (antifreeze) that meets the requirements of Chrysler Material Standard MS.90032. When adding engine coolant (antifreeze):

- We recommend using MOPAR® Antifreeze/Coolant 10 Year/150,000 Mile Formula OAT (Organic Additive Technology) that meets the requirements of Chrysler Material Standard MS.90032.
- Mix a minimum solution of 50% OAT engine coolant that meets the requirements of Chrysler Material Standard MS.90032 and distilled water. Use higher concentrations (not to exceed 70%) if temperatures below –34° F (–37° C) are anticipated.
- Use only high purity water such as distilled or deionized water when mixing the water/engine coolant (antifreeze) solution. The use of lower quality water will reduce the amount of corrosion protection in the engine cooling system.

Please note that it is the owner's responsibility to maintain the proper level of protection against freezing according to the temperatures occurring in the area where the vehicle is operated.

NOTE:

- Some vehicles require special tools to add coolant properly. Failure to fill these systems properly could lead to severe internal engine damage. If any coolant is needed to be added to the system please contact your local authorized dealer.
- Mixing engine coolant (antifreeze) types is not recommended and can result in cooling system damage. If HOAT and OAT coolant are mixed in an emergency, have a authorized dealer drain, flush, and refill with OAT coolant (conforming to MS.90032) as soon as possible.

Downloaded from www.Manualslib.com manuals search engine

Cooling System Pressure Cap

The cap must be fully tightened to prevent loss of engine coolant (antifreeze) and to ensure that engine coolant (antifreeze) will return to the radiator from the coolant recovery tank.

The cap should be inspected and cleaned if there is any accumulation of foreign material on the sealing surfaces.

WARNING!

- **Do not open hot engine cooling system. Never add engine coolant (antifreeze) when the engine is overheated. Do not loosen or remove the cap to cool an overheated engine. Heat causes pressure to build up in the cooling system. To prevent scalding or injury, do not remove the pressure cap while the system is hot or under pressure.**

(Continued)

WARNING! ***(Continued)***

- **Do not use a pressure cap other than the one specified for your vehicle. Personal injury or engine damage may result.**

Disposal Of Used Engine Coolant

Used ethylene glycol-based engine coolant (antifreeze) is a regulated substance requiring proper disposal. Check with your local authorities to determine the disposal rules for your community. To prevent ingestion by animals or children, do not store ethylene glycol-based engine coolant in open containers or allow it to remain in puddles on the ground. If ingested by a child or pet, seek emergency assistance immediately. Clean up any ground spills immediately.

Downloaded from www.Manualslib.com manuals search engine

Coolant Level

The coolant expansion bottle provides a quick visual method for determining that the coolant level is adequate. With the engine off and cold, the level of the engine coolant (antifreeze) in the bottle should be between the "MIN" and "MAX" marks.

As long as the engine operating temperature is satisfactory, the coolant bottle need only be checked once a month.

When additional engine coolant (antifreeze) is needed to maintain the proper level, it should be added to the coolant bottle. Do not overfill.

Points To Remember

NOTE: When the vehicle is stopped after a few miles/kilometers of operation, you may observe vapor coming from the front of the engine compartment. This is normally a result of moisture from rain, snow, or high humidity accumulating on the radiator and being vaporized when the thermostat opens, allowing hot engine coolant (antifreeze) to enter the radiator.

If an examination of your engine compartment shows no evidence of radiator or hose leaks, the vehicle may be safely driven. The vapor will soon dissipate.

- Do not overfill the coolant expansion bottle.
- Check the coolant freeze point in the radiator and in the coolant expansion bottle. If engine coolant (antifreeze) needs to be added, the contents of the coolant expansion bottle must also be protected against freezing.

Downloaded from www.Manualslib.com manuals search engine

- If frequent engine coolant (antifreeze) additions are required, the cooling system should be pressure tested for leaks.
- Maintain engine coolant (antifreeze) concentration at a minimum of 50% OAT coolant (conforming to MS-90032) and distilled water for proper corrosion protection of your engine which contains aluminum components.
- Keep the front of the radiator clean. If your vehicle is equipped with air conditioning, keep the front of the condenser clean.
- Do not change the thermostat for Summer or Winter operation. If replacement is ever necessary, install ONLY the correct type thermostat. Other designs may result in unsatisfactory engine coolant (antifreeze) performance, poor gas mileage, and increased emissions.

Brake System

In order to assure brake system performance, all brake system components should be inspected periodically. Refer to the "Maintenance Schedule" for the proper maintenance intervals.

WARNING!

Riding the brakes can lead to brake failure and possibly a collision. Driving with your foot resting or riding on the brake pedal can result in abnormally high brake temperatures, excessive lining wear, and possible brake damage. Riding the brakes may also reduce braking capacity in an emergency.

Brake Master Cylinder

The fluid level in the master cylinder should be checked when performing under hood services, or immediately if the "Brake Warning Light" is on.

Downloaded from www.Manualslib.com manuals search engine

Be sure to clean the top of the master cylinder area before removing the cap. If necessary, add fluid to bring the fluid level up to the requirements described on the brake fluid reservoir. Fluid level can be expected to fall as the brake pads wear. The brake fluid level should be checked when the pads are replaced. However, low fluid level may be caused by a leak and a checkup may be needed.

Use only manufacturer's recommended brake fluid. Refer to "Fluids, Lubricants, and Genuine Parts" in "Maintaining Your Vehicle" for further information.

WARNING!

- **Use only manufacturer's recommended brake fluid. Refer to "Fluids, Lubricants, and Genuine Parts" in "Maintaining Your Vehicle" for further information. Using the wrong type of brake fluid can severely damage your brake system and/or**

(Continued)

WARNING! ***(Continued)***

impair its performance. The proper type of brake fluid for your vehicle is also identified on the original factory installed hydraulic master cylinder reservoir.

- **To avoid contamination from foreign matter or moisture, use only new brake fluid or fluid that has been in a tightly closed container. Keep the master cylinder reservoir cap secured at all times. Brake fluid in a open container absorbs moisture from the air resulting in a lower boiling point. This may cause it to boil unexpectedly during hard or prolonged braking, resulting in sudden brake failure. This could result in a collision.**
- **Overfilling the brake fluid reservoir can result in spilling brake fluid on hot engine parts, causing the brake fluid to catch fire. Brake fluid can also**

(Continued)

Downloaded from www.Manualslib.com manuals search engine

WARNING! *(Continued)*

damage painted and vinyl surfaces, care should be taken to avoid its contact with these surfaces.

- Do not allow petroleum-based fluid to contaminate the brake fluid. Brake seal components could be damaged, causing partial or complete brake failure. This could result in a collision.

CAUTION!

Use of improper brake fluids will affect overall clutch system performance. Improper brake fluids may damage the clutch system resulting in loss of clutch function and the ability to shift the transmission.

Checking Brake Fluid

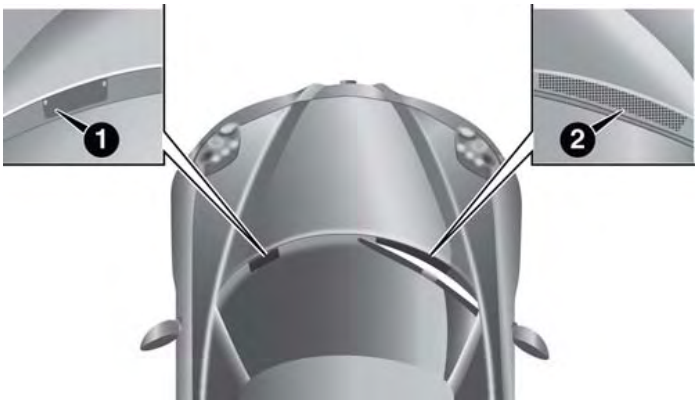

1 — Brake Fluid Protection Panel
2 — Washer Solvent Protection Panel

Downloaded from www.Manualslib.com manuals search engine

To check the brake fluid level, proceed as follows:

1. Loosen the two screws and remove the brake fluid protection panel.

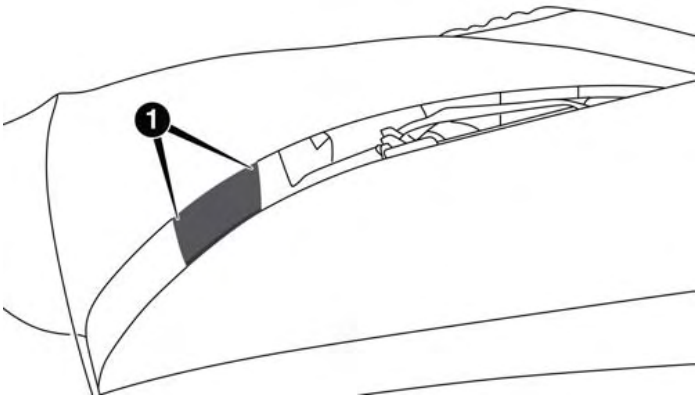

Brake Fluid Protection Panel

1 — Screw Locations

2. Check that the fluid is at the max. level.
3. After checking, reposition the brake fluid protection panel and tighten the two screws.

Adding Brake Fluid

If the fluid level in the reservoir is not sufficient, proceed as follows:

1. Take the black funnel for topping up the brake fluid and its extension pipe from the service kit in the luggage compartment.
2. Loosen the reservoir plug and introduce the funnel with the extension pipe in the reservoir inlet.

Downloaded from www.Manualslib.com manuals search engine

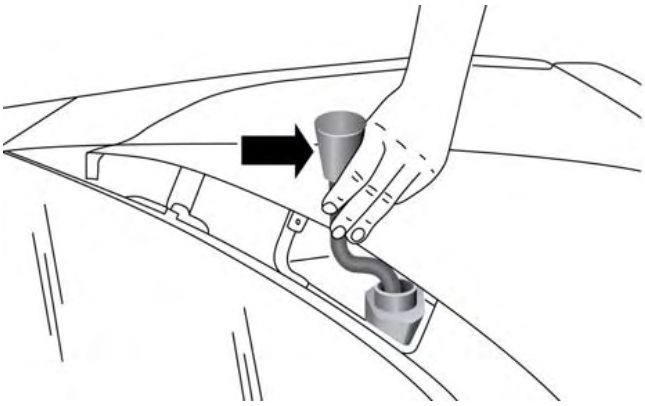

Brake Fluid Funnel

3. After topping up, remove the funnel with the extension pipe.
4. Tighten the reservoir plug.
5. Reposition the brake fluid protection panel and tighten the two screws.

NOTE: Be very careful while removing the plug from the opening to prevent the plug from falling inside the vehicle body.

Alfa Twin Clutch Transmission

Selection Of Lubricant

It is important to use the proper transmission fluid to ensure optimum transmission performance and life. Use only the manufacturer's specified transmission fluid. Refer to "Fluids, Lubricants, and Genuine Parts" in this section for fluid specifications. It is important to maintain the transmission fluid at the correct level using the recommended fluid. No chemical flushes should be used in any transmission; only the approved lubricant should be used.

Downloaded from www.Manualslib.com manuals search engine

CAUTION!

Using a transmission fluid other than the manufacturer's recommended fluid may cause deterioration in transmission shift quality. Refer to "Fluids, Lubricants, and Genuine Parts" in this section for fluid specifications.

Special Additives

The manufacturer strongly recommends against using any special additives in the transmission.

Transmission fluid is an engineered product and its performance may be impaired by supplemental additives. Therefore, do not add any fluid additives to the transmission. The only exception to this policy is the use of special dyes for diagnosing fluid leaks.

CAUTION!

Do not use chemical flushes in your transmission as the chemicals can damage your transmission components. Such damage is not covered by the New Vehicle Limited Warranty.

Fluid Level Check

The fluid level is preset at the factory and does not require adjustment under normal operating conditions. Routine fluid level checks are not required, therefore the transmission has no dipstick. Your authorized dealer can check your transmission fluid level using special service tools. If you notice fluid leakage or transmission malfunction, visit your authorized dealer immediately to have the transmission fluid level checked. Operating the vehicle with an improper fluid level can cause severe transmission damage.

Downloaded from www.Manualslib.com manuals search engine

CAUTION!

If a transmission fluid leak occurs, visit your authorized dealer immediately. Severe transmission damage may occur. Your authorized dealer has the proper tools to adjust the fluid level accurately.

Fluid Changes

Under normal operating conditions, the fluid installed at the factory will provide satisfactory lubrication for the life of the vehicle. However, change the fluid if it becomes contaminated (with water, etc.), or if the transmission is disassembled for any reason.

Appearance Care And Protection From Corrosion

Protection Of Body And Paint From Corrosion

Vehicle body care requirements vary according to geographic locations and usage. Chemicals that make roads passable in snow and ice and those that are sprayed on trees and road surfaces during other seasons are highly corrosive to the metal in your vehicle. Outside parking, which exposes your vehicle to airborne contaminants, road surfaces on which the vehicle is operated, extreme hot or cold weather and other extreme conditions will have an adverse effect on paint, metal trim, and underbody protection.

The following maintenance recommendations will enable you to obtain maximum benefit from the corrosion resistance built into your vehicle.

What Causes Corrosion?

Corrosion is the result of deterioration or removal of paint and protective coatings from your vehicle.

The most common causes are:

- Road salt, dirt and moisture accumulation.
- Stone and gravel impact.

Downloaded from www.Manualslib.com manuals search engine

- Insects, tree sap and tar.
- Salt in the air near seacoast localities.
- Atmospheric fallout/industrial pollutants.

Washing

- Wash your vehicle regularly. Always wash your vehicle in the shade using MOPAR® Car Wash, or a mild car wash soap, and rinse the panels completely with clear water.
- If insects, tar, or other similar deposits have accumulated on your vehicle, use MOPAR® Super Kleen Bug and Tar Remover to remove.
- Use a high quality cleaner wax, such as MOPAR® Cleaner Wax to remove road film, stains and to protect your paint finish. Take care never to scratch the paint.
- Avoid using abrasive compounds and power buffing that may diminish the gloss or thin out the paint finish.

NOTE: Hand washing is recommended. Avoid washing with power washers, or commercial car wash facilities.

CAUTION!

- **Do not use abrasive or strong cleaning materials such as steel wool or scouring powder that will scratch metal and painted surfaces.**
- **Use of power washers exceeding 1,200 psi (8 274 kPa) can result in damage or removal of paint and decals.**
- **If the engine compartment is washed with an high pressure jet, keep it at a distance of at least 8 inches (20 centimeters) from filler surface.**

Downloaded from www.Manualslib.com manuals search engine

Special Care

- If you drive on salted or dusty roads or if you drive near the ocean, hose off the undercarriage at least once a month.
- It is important that the drain holes in the lower edges of the doors, rocker panels, and trunk be kept clear and open.
- If you detect any stone chips or scratches in the paint, touch them up immediately. The cost of such repairs is considered the responsibility of the owner.
- If your vehicle is damaged due to a collision or similar cause that destroys the paint and protective coating, have your vehicle repaired as soon as possible. The cost of such repairs is considered the responsibility of the owner.
- If you carry special cargo such as chemicals, fertilizers, de-icer salt, etc., be sure that such materials are well packaged and sealed.
- If a lot of driving is done on gravel roads, consider mud or stone shields behind each wheel.
- Use MOPAR® Touch Up Paint on scratches as soon as possible. Your authorized dealer has touch up paint to match the color of your vehicle.

Wheel And Wheel Trim Care

- All wheels and wheel trim, especially aluminum and chrome plated wheels, should be cleaned regularly with a mild soap and water to prevent corrosion.
- To remove heavy soil and/or excessive brake dust, use MOPAR® Wheel Cleaner.

Downloaded from www.Manualslib.com manuals search engine

NOTE: If your vehicle is equipped with Dark Vapor or Black Satin Chrome wheels DO NOT USE wheel cleaners, abrasives or polishing compounds. They will permanently damage this finish and such damage is not covered by the New Vehicle Limited Warranty. USE ONLY MILD SOAP AND WATER WITH A SOFT CLOTH. Used on a regular basis this is all that is required to maintain this finish.

CAUTION!

Do not use scouring pads, steel wool, a bristle brush, or metal polishes. Do not use oven cleaner. These products may damage the wheel's protective finish. Avoid automatic car washes that use acidic solutions or harsh brushes that may damage the wheel's protective finish. Only MOPAR® Wheel Cleaner or equivalent is recommended.

Stain Repel Fabric Cleaning Procedure — If Equipped

Stain Repel seats may be cleaned in the following manner:

- Remove as much of the stain as possible by blotting with a clean, dry towel.
- Blot any remaining stain with a clean, damp towel.
- For tough stains, apply MOPAR® Total Clean, or a mild soap solution to a clean, damp cloth and remove stain. Use a fresh, damp towel to remove soap residue.
- For grease stains, apply MOPAR® Multi-Purpose Cleaner to a clean, damp cloth and remove stain. Use a fresh, damp towel to remove soap residue.
- Do not use any harsh solvents or any other form of protectants on Stain Repel products.

Downloaded from www.Manualslib.com manuals search engine

Interior Care

Use MOPAR® Total Clean to clean fabric upholstery and carpeting.

Use MOPAR® Total Clean to clean vinyl upholstery.

MOPAR® Total Clean is specifically recommended for leather upholstery.

Your leather upholstery can be best preserved by regular cleaning with a damp soft cloth. Small particles of dirt can act as an abrasive and damage the leather upholstery and should be removed promptly with a damp cloth. Stubborn soils can be removed easily with a soft cloth and MOPAR® Total Clean. Care should be taken to avoid soaking your leather upholstery with any liquid. Please do not use polishes, oils, cleaning fluids, solvents, detergents, or ammonia-based cleaners to clean your leather upholstery. Application of a leather conditioner is not required to maintain the original condition.

WARNING!

Do not use volatile solvents for cleaning purposes. Many are potentially flammable, and if used in closed areas they may cause respiratory harm.

CAUTION!

Do not use Alcohol and Alcohol-based and/or Keton based cleaning products to clean leather seats, as damage to the seat may result.

Cleaning Headlights

Your vehicle has plastic headlights that are lighter and less susceptible to stone breakage than glass headlights.

Plastic is not as scratch resistant as glass and therefore different lens cleaning procedures must be followed.

Downloaded from www.Manualslib.com manuals search engine

To minimize the possibility of scratching the lenses and reducing light output, avoid wiping with a dry cloth. To remove road dirt, wash with a mild soap solution followed by rinsing.

Do not use abrasive cleaning components, solvents, steel wool or other aggressive material to clean the lenses.

Glass Surfaces

All glass surfaces should be cleaned on a regular basis with MOPAR®, or any commercial household-type glass cleaner. Never use an abrasive type cleaner. Use caution when cleaning the inside rear window equipped. Do not use scrapers or other sharp instrument that may scratch the elements.

Labels can be peeled off after soaking with warm water (If Equipped), keep all objects a safe distance from the windows.

When cleaning the rear view mirror, spray cleaner on the towel or rag that you are using. Do not spray cleaner directly on the mirror.

Instrument Panel Cover

The instrument panel cover has a low glare surface which minimizes reflections on the windshield. Do not use protectants or other products which may cause undesirable reflections. Use soap and warm water to restore the low glare surface.

Instrument Panel Bezels

CAUTION!

When installing hanging air fresheners in your vehicle, read the installation instructions carefully. Some air fresheners will damage the finish of painted or decorated parts if allowed to directly contact any surface.

Downloaded from www.Manualslib.com manuals search engine

Cleaning Plastic Instrument Cluster Lenses

The lenses in front of the instruments in this vehicle are molded in clear plastic. When cleaning the lenses, care must be taken to avoid scratching the plastic.

1. Clean with a wet soft rag. A mild soap solution may be used, but do not use high alcohol content or abrasive cleaners. If soap is used, wipe clean with a clean damp rag.
2. Dry with a soft cloth.

Seat Belt Maintenance

Do not bleach, dye or clean the belts with chemical solvents or abrasive cleaners. This will weaken the fabric. Sun damage can also weaken the fabric.

If the belts need cleaning, use a mild soap solution or lukewarm water. Do not remove the belts from the car to wash them. Dry with a soft cloth.

Replace the belts if they appear frayed or worn or if the buckles do not work properly.

WARNING!

A frayed or torn belt could rip apart in a collision and leave you with no protection. Inspect the belt system periodically, checking for cuts, frays, or loose parts. Damaged parts must be replaced immediately. Do not disassemble or modify the system. Seat belt assemblies must be replaced after a collision if they have been damaged (i.e., bent retractor, torn webbing, etc.).

Downloaded from www.Manualslib.com manuals search engine

FUSES

WARNING!

- **When replacing a blown fuse, always use an appropriate replacement fuse with the same amp rating as the original fuse. Never replace a fuse with another fuse of higher amp rating. Never replace a blown fuse with metal wires or any other material. Failure to use proper fuses may result in serious personal injury, fire and/or property damage.**
- **Before replacing a fuse, make sure that the ignition is off and that all the other services are switched off and/or disengaged.**
- **If the replaced fuse blows again, contact an authorized dealer.**

(Continued)

WARNING! ***(Continued)***

- **If a general protection fuse for safety systems (air bag system, braking system), power unit systems (engine system, gearbox system) or steering system blows, contact an authorized dealer.**

Downloaded from www.Manualslib.com manuals search engine

Engine Compartment Fuses

The engine compartment fuse box is located on the left side of the engine compartment, next to the battery. To access the fuses, remove screws and then remove the cover.

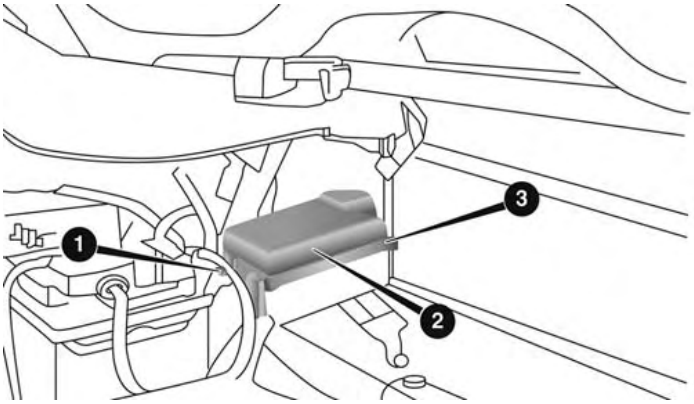

Engine Compartment Fuse Box

1 — Forward Screw
2 — Fuse Box Cover
3 — Rearward Screw

The ID number of the electrical component corresponding to each fuse can be found on the back of the cover.

Downloaded from www.Manualslib.com manuals search engine

Cavity	Maxi Fuse	Mini Fuse	Description
F01	70 Amp Tan		Body Controller
F03	20 Amp Yellow		Ignition Switch
F04	40 Amp Orange		Anti-Lock Brake Pump
F05	20 Amp Yellow		Anti-Lock Brake Valve
F06	40 Amp Orange		Radiator Fan - Low Speed
F07	50 Amp Red		Radiator Fan - High Speed
F08	20 Amp Yellow		Blower Motor
F09		5 Amp Tan	Headlight beam switch (If Equipped)
F10		10 Amp Red	Horn
F11		20 Amp Yellow	Powertrain
F14		15 Amp Blue	Alfa Twin Clutch Transmission
F15		15 Amp Blue	Alfa Twin Clutch Transmission
F16		5 Amp Tan	Alfa Twin Clutch Transmission, ECM
F17		10 Amp Red	Powertrain
F18		5 Amp Tan	Powertrain

Downloaded from www.Manualslib.com manuals search engine

Cavity	Maxi Fuse	Mini Fuse	Description
F19		7.5 Amp Brown	Air Conditioning Compressor
F21		20 Amp Yellow	Fuel Pump
F22		20 Amp Yellow	Engine Control Unit Power Supply
F24		5 Amp Tan	Anti-Lock Brake System (ABS)
F30		10 Amp Red	Water Pump, HVAC
F82	30 Amp Green		Headlamp Washer (If Equipped)
F83	40 Amp Orange		Alfa Twin Clutch Transmission Pump
F84		5 Amp Tan	After Run Pump
F86		15 Amp Blue	Rear Power Outlet 12V
F88		7.5 Amp Brown	Heated Mirrors

Downloaded from www.Manualslib.com manuals search engine

Dashboard Fuse Box

The dashboard fuse box is part of the Body Control Module (BCM) and is located on the passenger side under the forward passenger floor. Remove the six screws and the forward floor pan to access the BCM.

Cavity	Vehicle Fuse Number	Mini Fuse	Description
3	F53	7.5 Amp Brown	Instrument Panel Node
4	F38	15 Amp Blue	Central Door Locking
5	F36	10 Amp Red	Diagnostic Socket, Car Radio, TPMS, Alarm
6	F43	20 Amp Yellow	Bi-Directional Washer
7	F48	20 Amp Yellow	Passenger Power Window
9	F50	7.5 Amp Brown	Airbag
10	F51	7.5 Amp Brown	Headlamp Washer Relay, A/C Compressor Relay, High Beam Relay, Parking ECU, Car Radio, Stop Lamp Switch
11	F37	7.5 Amp Brown	Stop Light Switch, Instrument Panel Node

Downloaded from www.Manualslib.com manuals search engine

Cavity	Vehicle Fuse Number	Mini Fuse	Description
12	F49	5 Amp Tan	Transmission Shifter Module, Cigar Lighter Light, Drive Style Unit, Heated Mirrors Relay
13	F31	5 Amp Tan	Climate Control, Body Controller
14	F47	20 Amp Yellow	Driver Power Window

VEHICLE STORAGE

If you are leaving your vehicle dormant for more than 21 days, you may want to take these steps to protect your battery.

- Disconnect the negative cable from the battery.
- Anytime you store your vehicle, or keep it out of service (e.g., vacation) for two weeks or more, run the air conditioning system at idle for about five minutes in the fresh air and high blower setting. This will ensure adequate system lubrication to minimize the possibility of compressor damage when the system is started again.

REPLACEMENT BULBS

Interior Bulbs

	Bulb Number
Overhead Lamp	C10W
Luggage Compartment	W5W

Downloaded from www.Manualslib.com manuals search engine

Exterior Bulbs

	Bulb Number
Parking Lights/Daytime Running Lights (DRL)	LED (See Authorized dealer)
Rear Tail Lights	LED (See Authorized dealer)
Font and Rear Side Lights	W3W
Dipped/Main Beam Headlights (Versions With Bi-Halogen Headlights) — If Equipped	HIR2
Dipped/Main Beam Headlights (Versions With Bi-Xenon Headlights) — If Equipped	D5S (See Authorized dealer)
Dipped/Main Beam Headlights (Versions With Bi-Led	LED (See Authorized dealer)

	Bulb Number
Headlights) — If Equipped	
Front Direction Indicators	PY24W
Rear Direction Indicators	P21W
Side Direction Indicators	WY5W
Brake Lights	LED (See Authorized dealer)
Third Brake Light	LED (See Authorized dealer)
License Plate Lamps	W5W
Reversing light	W16W

NOTE: Numbers refer to commercial bulb types that can be purchased from your authorized dealer.

If a bulb needs to be replaced, visit your authorized dealer or refer to the applicable Service Manual.

Downloaded from www.Manualslib.com manuals search engine

BULB REPLACEMENT

NOTE: Lens fogging can occur under certain atmospheric conditions. This will usually clear as atmospheric conditions change to allow the condensation to change back into a vapor. Turning the lamps on will usually accelerate the clearing process.

Front Light Clusters

The front head lamp contains bulbs for the parking lights/daytime running lights (DRL), low beam headlights, high beam headlights and direction indicators.

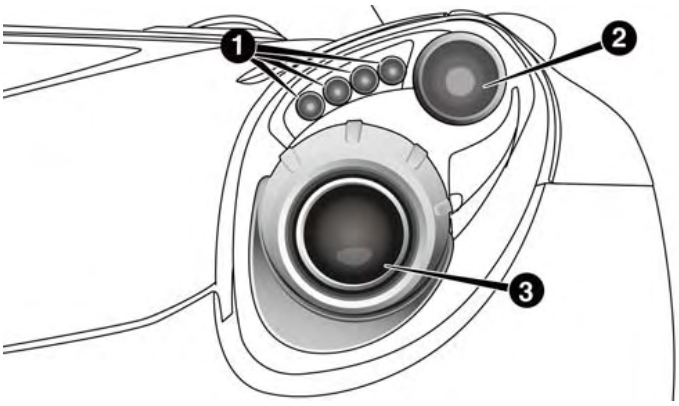

1 — Daytime Running Lights
2 — Direction Indicator
3 — High/Low Beam Lights

If bulb replacement is required, please see an authorized dealer.

Downloaded from www.Manualslib.com manuals search engine

Side Lights/Daytime Running Lights (DRL)

These are LEDs. For the replacement, contact the your authorized dealer.

Low/High Beam Bi-Halogen Headlights

To change the bulb, proceed as follows:

1. Turn the steering wheel completely.
2. Open the protective flap by rotating the screw.

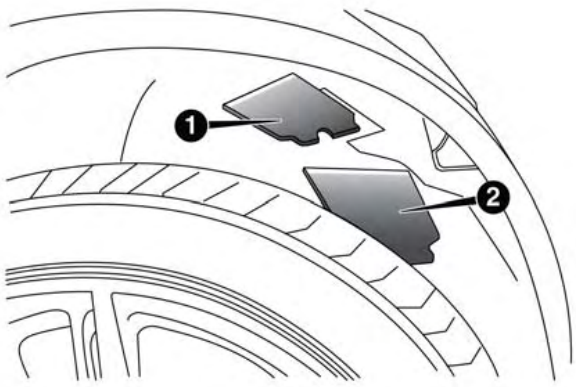

1 — Direction Indicator Bulb Protective Flap
2 — Headlamp Bulb Protective Flap

Downloaded from www.Manualslib.com manuals search engine

3. Remove the electric connector (1) and then rotate the bulb holder (2) clockwise and remove it.

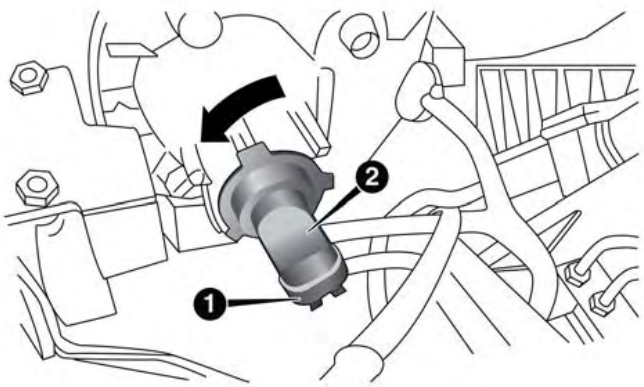

1 — Electrical Connector
2 — Bulb Holder

4. Extract the bulb and replace it.
5. Refit the new bulb, making sure that it is locked correctly, and reconnect the electrical connector.
6. Close the protective flap.

Low/High Beam HID & LED Headlights

For the replacement, contact the your authorized dealer.

Direction Indicators

Front:

1. Turn the steering wheel completely.
2. Open the protective flap by rotating the screw.

Downloaded from www.Manualslib.com manuals search engine

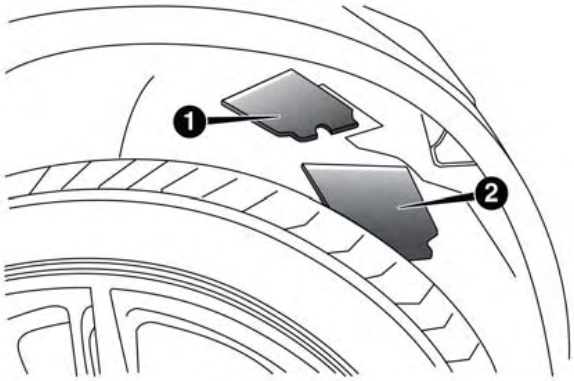

1 — Direction Indicator Bulb Protective Flap
2 — Headlamp Bulb Protective Flap

3. Rotate the bulb holder counterclockwise and remove it.
4. Rotate the bulb assembly counter clockwise to remove from bulb holder.
5. Install the new bulb, making sure that it is locked in correctly, and reinstall into headlamp assembly.

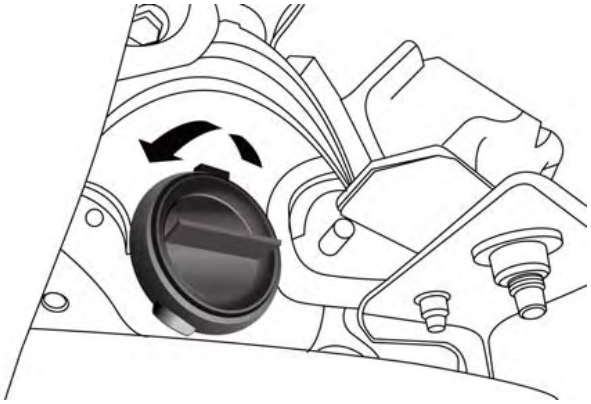

Bulb Holder

6. Close the protective flap.

Downloaded from www.Manualslib.com manuals search engine

Side:

1. Adjust the lens in the point shown in to compress the retaining clip, then pull the cluster outwards.
2. Turn the bulb holder counterclockwise, remove the bulb and replace it.
3. Install the bulb holder in the lens and turn it clockwise.
4. Install the cluster making sure that the internal clip clicks into position.

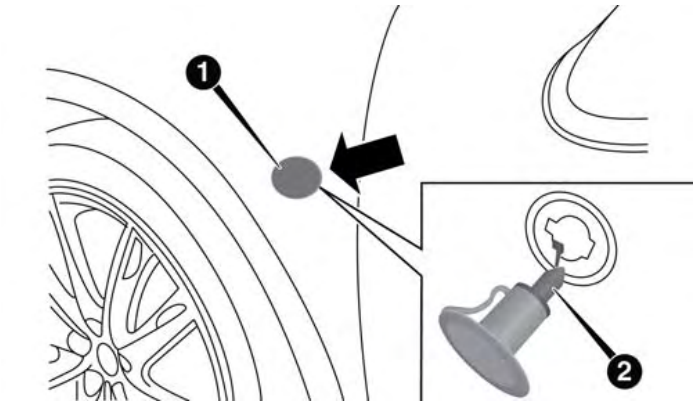

1 — Lens
2 — Bulb Holder

Downloaded from www.Manualslib.com manuals search engine

Front Side Marker

To change the bulb, proceed as follows:

1. Turn the front wheels to gain access and then remove the fastener from the inner wheel liner.

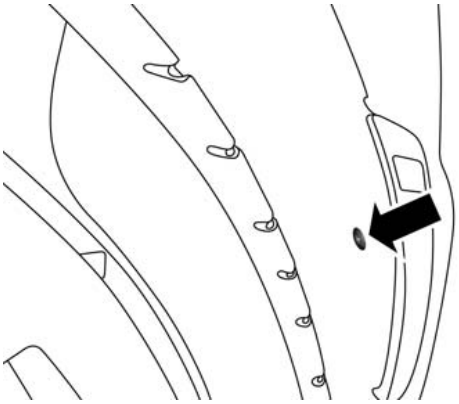

Fastener Location

2. Fold back wheel liner door to access bulb housing.

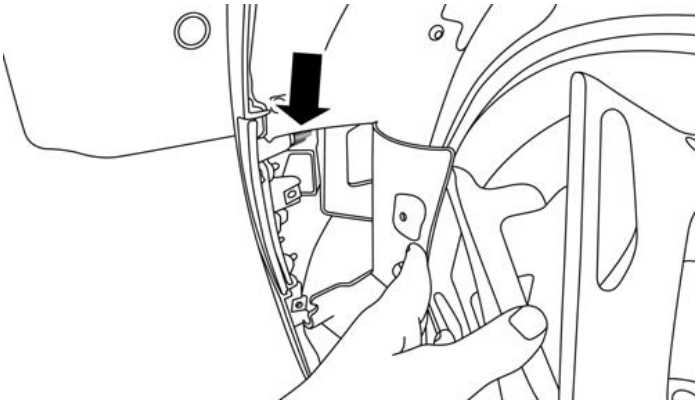

Bulb Housing Location

Downloaded from www.Manualslib.com manuals search engine

3. Remove bulb from bulb housing then remove and replace bulb and reinstall.

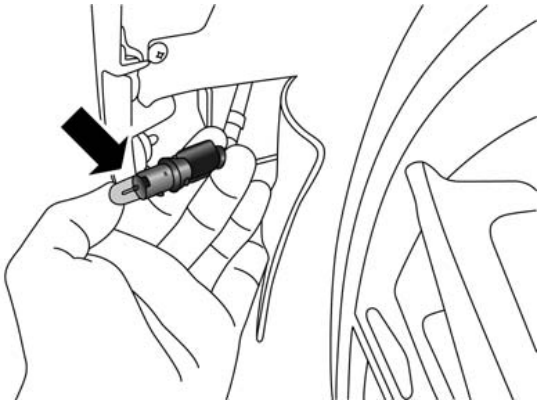

Front Side Marker Bulb

Rear Light Clusters

These contain the bulbs for the side lights, direction indicators and brake lights.

Direction Indicators

To change the bulb, proceed as follows:

1. Remove the protective cap (one for each side) on the side cover of the luggage compartment.

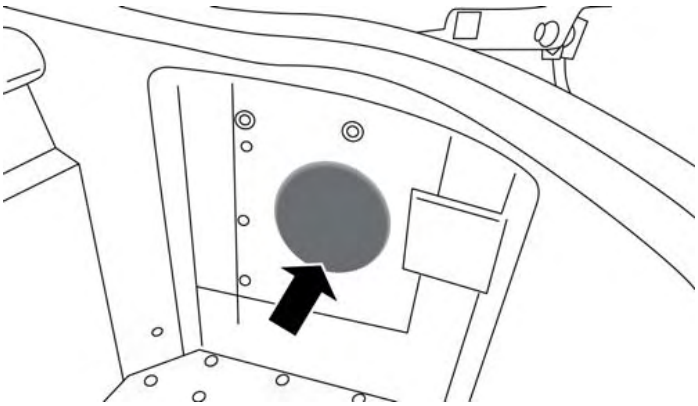

First Protective Cap

Downloaded from www.Manualslib.com manuals search engine

2. Remove the second protective cap inserting a hand inside the opening.

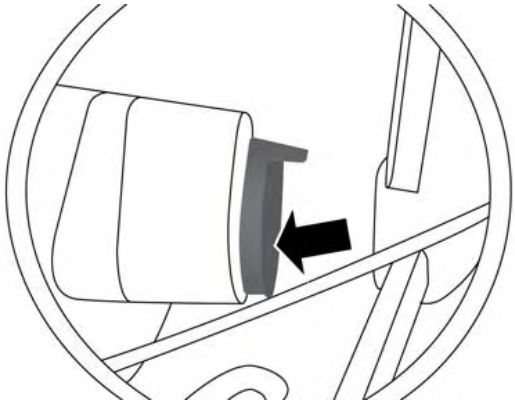

Second Protective Cap

3. Rotate clockwise to remove the bulb holder remove the bulb from the bulb holder.
4. Install the bulb by pressing it into bulb holder then turn install the bulb holder and turn it counterclockwise.
5. Install the previously removed protective caps.

Tail Lights/Brake Lights

These are LEDs. For the replacement, contact the your local dealer.

Reversing Light

WARNING!

The reversing light are located close to the exhaust pipes; take the utmost care not to get burnt during the bulb replacement.

Downloaded from www.Manualslib.com manuals search engine

To replace the reversing lights turn the bulb holder counterclockwise, remove the bulb and replace it.

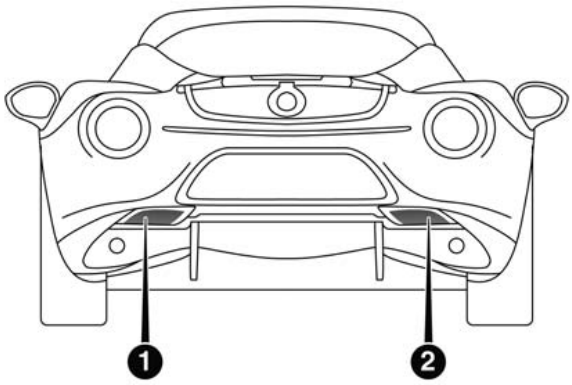

1 — Reverse Light Location
2 — Reverse Light Location

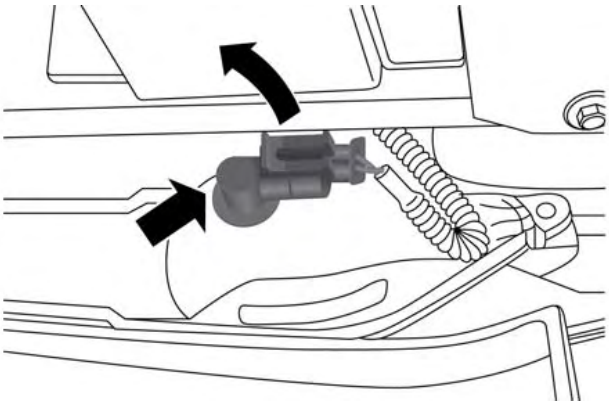

Reversing Light Bulb Holder

Third Brake Lights

These are LEDs. For the replacement, contact your local dealer.

Downloaded from www.Manualslib.com manuals search engine

License Plate Lights

To replace the bulbs proceed as follows:

1. Position the lens in the point shown laterally to compress the retaining clip, then pull the license plate light cluster out.

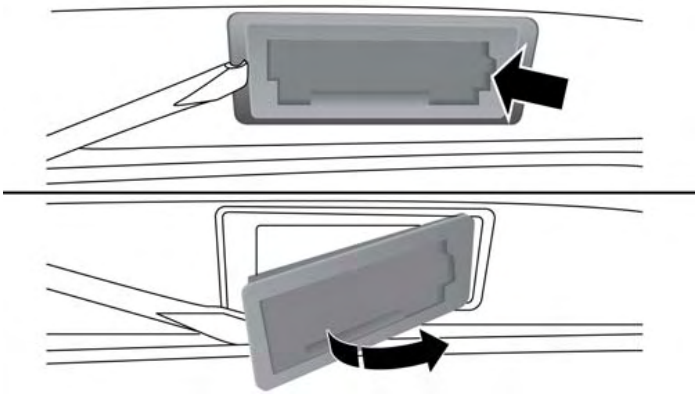

License Plate Lamp Removal

2. Turn bulb holder (1) counterclockwise, remove bulb (2) and replace it.

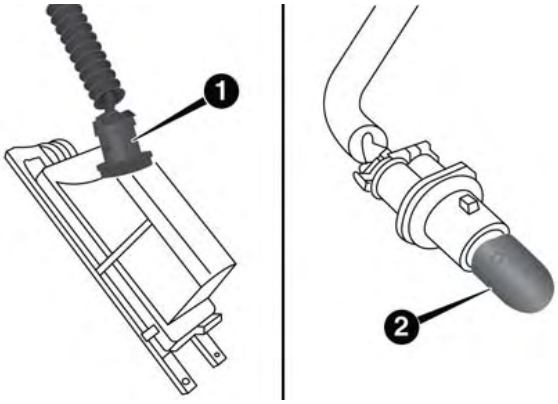

1 — Bulb Holder
2 — Bulb

Downloaded from www.Manualslib.com manuals search engine

Roof Light

To change the bulb, proceed as follows:

1. Remove roof light working at the points indicated by the arrows.

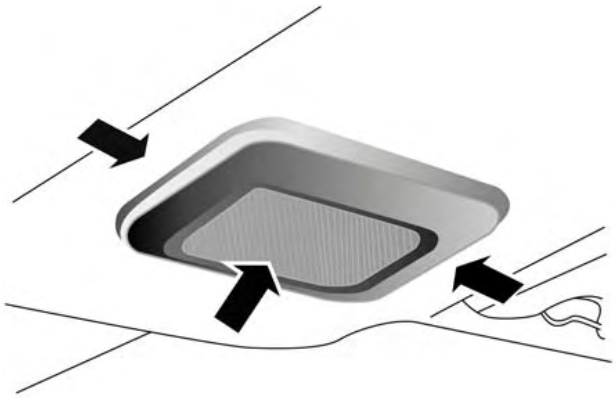

Roof Light

2. Open protective flap (2) and replace bulb (1), releasing it from the side contacts. Make sure that the new bulb is correctly secured between the contacts.

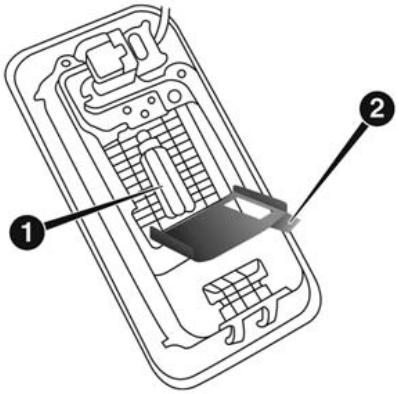

1 — Bulb
2 — Protective Flap

3. Close protective flap (2) and install roof light in its housing, making sure that it is locked in place.

Downloaded from www.Manualslib.com manuals search engine

Luggage Compartment Roof Light

To replace the bulb, proceed as follows:

1. Open the luggage compartment and remove luggage compartment roof light, working in the direction shown by the arrow.

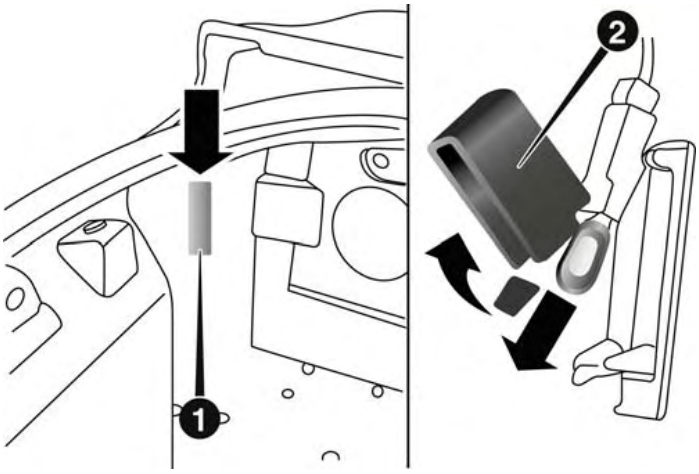

1 — Light Cover
2 — Light Protector

2. Open light protector (2) and replace the bulb.
3. Close protector on the lens.

Downloaded from www.Manualslib.com manuals search engine

4. Install luggage compartment roof light by inserting it in its correct position, first on one side and then pressing on the other side until it clicks into place.

FLUID CAPACITIES

	U.S.	Metric
Fuel (Approximate)		
1.750 Turbo Engine	10.5 Gallons	40 Liters
Reserve Fuel	1.1 Gallons	4 Liters
Engine Oil with Filter		
1.750 Turbo Engine	6.1 Quarts	5.8 Liters
Cooling System		
1.750 Turbo Engine (MOPAR® Antifreeze/Engine Coolant 10 Year/150,000 Mile Formula).	11.2 Quarts	10.6 Liters

Downloaded from www.Manualslib.com manuals search engine

FLUIDS, LUBRICANTS AND GENUINE PARTS

Engine

Component	Fluid, Lubricant, or Genuine Part
Engine Coolant - 1.750 Turbo Engine	We recommend you use MOPAR® Antifreeze/Coolant 10 Year/150,000 Mile Formula OAT (Organic Additive Technology) or equivalent meeting the requirements of Chrysler Material Standard MS.90032.
Engine Oil - 1.750 Turbo Engine	We recommend you use SAE 5W-40 API Certified Synthetic Engine Oil, meeting the requirements of Chrysler Material Standard MS-12991. Refer to your engine oil filler cap for correct SAE grade.
Engine Oil Filter - 1.750 Turbo Engine	We recommend you use MOPAR® Engine Oil Filter.
Spark Plugs - 1.750 Turbo Engine	We recommend you use MOPAR® Spark Plugs. *
Fuel Selection - 1.750 Turbo Engine	Use Only 91 Octane or higher.

Downloaded from www.Manualslib.com manuals search engine

NOTE: * The following are essential to ensure correct operation and prevent serious damage to the engine: only use spark plugs of the same make and type which are specially certified for such engines strictly comply with the spark plug replacement interval given in the maintenance schedule. For spark plug replacement, it is advisable to contact the dedicated Alfa Romeo Dealership. Refer to the "Maintenance Schedule" section for the required spark plug intervals.

Chassis

Component	Fluid, Lubricant, or Genuine Part
Alfa Twin Clutch Transmission	Gear Oil: Use Castrol BOT402 Control System: MOPAR® C Series DDCT SAE 75W Hydraulic Fluid or equivalent.
Brake Master Cylinder	We recommend you use MOPAR® DOT 4. If DOT 4 brake fluid is not available, then DOT 3 is acceptable.

Downloaded from www.Manualslib.com manuals search engine

Downloaded from www.Manualslib.com manuals search engine

MAINTENANCE SCHEDULES

CONTENTS

■ MAINTENANCE SCHEDULE 308
□ Maintenance Chart 311

Downloaded from www.Manualslib.com manuals search engine

MAINTENANCE SCHEDULE

Your vehicle is equipped with an automatic oil change indicator system. The oil change indicator system will remind you that it is time to take your vehicle in for scheduled maintenance.

Based on engine operation conditions, the oil change indicator message will illuminate in the instrument cluster. This means that an engine oil and engine oil filter change is required for your vehicle. Operating conditions such as frequent short-trips, trailer tow, extremely hot or cold ambient temperatures, and E85 fuel usage will influence when the "Change Oil" or "Oil Change Required" message is displayed. Severe Operating Conditions can cause the change oil message to illuminate as early as 3,500 miles (5,600 km) since last reset. Have your vehicle serviced as soon as possible, within the next 500 miles (805 km).

The Wrench Warning Light may appear in the cluster as a service reminder when vehicle maintenance is required, according to the scheduled maintenance mileage. The maintenance schedule intervals are set by the manufacturer. Failure to have them carried out may void your New Vehicle Warranty.

NOTE: The actual interval for changing the oil and replacing the engine oil filter depends on the vehicle usage conditions and is signalled by the warning light or message (if present) on the instrument panel or every 12 months.

Severe Duty All Models

In addition, if your vehicle is used under demanding conditions, including:

- On the track
- On dusty roads
- Short, repeated trips (less than 4-5 miles or 7-8 km) at sub-zero temperatures

Downloaded from www.Manualslib.com manuals search engine

- Allowing the engine to idle for extended periods of time
- Driving for long distances at low speeds
- Allowing the vehicle to sit for long periods of inactivity

Under any of the above circumstances, the following checks need to be performed more frequently than indicated in the Maintenance Schedule:

- Check front and rear disc brake pad condition and wear
- Check cleanliness of tailgate locks.
- Check cleanliness and lubrication of chassis and steering linkage
- Visually inspect condition of: engine, gearbox, transmission, pipes and hoses (exhaust - fuel system - brakes) and rubber elements (gaiters - sleeves - bushes - etc.)
- Check battery charge and battery fluid level (electrolyte)
- Visually inspect condition of the auxiliary drive belts
- Check and, if necessary, change engine oil and replace oil filter
- Check and, if necessary, replace air cleaner

Using the car on track should be regarded as an exception. The car has been designed and produced for road use.

Change Engine Oil at 4000 miles (6,500 km) if the vehicle is operated in a dusty and off road environment. This type of vehicle use is considered Severe Duty.

If the vehicle is operated in a dusty or dirty environment the engine air filter has to be changed every 6500 miles (10,000 km).

Downloaded from www.Manualslib.com manuals search engine

Once A Month Or Before A Long Trip/Periodic Checks

Every 600 miles (1,000 km) or before long trips, check and, if necessary, top off the following:

- Check engine oil level
- Check brake fluid level
- Check windshield washer fluid level
- Check the tire inflation pressures and look for unusual wear or damage
- Check the fluid levels of the coolant reservoir and brake master cylinder reservoir, and add as needed
- Check function of all interior and exterior lights
- Check screen wash/wipe system and positioning/wear of windscreen

Every 2000 miles (3000 km) check and, if necessary, top up: engine oil level

Required Maintenance Intervals

Refer to the maintenance schedules on the following page for the required maintenance intervals.

At Every Oil Change Interval As Indicated By Oil Change Indicator System:
Change oil and filter.
Inspect battery and clean and tighten terminals as required.
Inspect brake pads, shoes, rotors, drums, and hoses.
Inspect engine cooling system protection and hoses.
Check and adjust hand brake.
Inspect exhaust system.
Inspect engine air cleaner if using in dusty or off-road conditions.

Downloaded from www.Manualslib.com manuals search engine

Maintenance Chart

Mileage or time passed (whichever comes first)	12,000	24,000	36,000	48,000	60,000	72,000
Or Months:	**12**	**24**	**36**	**48**	**60**	**72**
Or Kilometers:	20,000	40,000	60,000	80,000	100,000	120,000
Check battery charge status and possibly recharge ⌂	X	X	X	X	X	X
Check tire condition/wear and adjust pressure if required	X	X	X	X	X	X
Check lighting system operation (headlights, direction indicators, hazard lights, passenger compartment lights, boot lights, instrument panel warning lights, etc.)	X	X	X	X	X	X
Check vehicle fasteners	X		X		X	
Check mechanical components fasteners	X	X	X	X	X	X
Check windscreen wiper/washer operation, adjust nozzles	X	X	X	X	X	X
Check position/wear of windscreen wiper blade	X	X	X	X	X	X

Downloaded from www.Manualslib.com manuals search engine

Mileage or time passed (whichever comes first)	12,000	24,000	36,000	48,000	60,000	72,000
Or Months:	**12**	**24**	**36**	**48**	**60**	**72**
Or Kilometers:	20,000	40,000	60,000	80,000	100,000	120,000
Check cleanliness of hood and deck lid locks, as well as cleanliness and lubrication of associated linkages	X	X	X	X	X	X
Visually inspect condition of: exterior bodywork, carbon monocoque, aerodynamic bottom, pipes and hoses (exhaust, fuel supply system, brakes), rubber elements (boots, driveshaft boots, sleeves, bushes, etc.)	X	X	X	X	X	X
Check condition and wear of front brake pads and discs, and operation of pad wear indicator	X	X	X	X	X	X
Check condition and wear of rear brake pads and discs, and operation of pad wear indicator	X	X	X	X	X	X
Check and top off, if required, fluid levels (engine coolant, brake/hydraulic clutch fluid, windscreen washer fluid, battery fluid, etc)	X	X	X	X	X	X
Visually inspect the condition of accessory drive belt(s)			X			

Downloaded from www.Manualslib.com manuals search engine

Mileage or time passed (whichever comes first)	12,000	24,000	36,000	48,000	60,000	72,000
Or Months:	**12**	**24**	**36**	**48**	**60**	**72**
Or Kilometers:	20,000	40,000	60,000	80,000	100,000	120,000
Check condition of timing belt			X			
Check handbrake lever travel and adjust, if necessary (or every 12 months)	X	X	X	X	X	X
Check exhaust gas emissions, or as required by applicable laws	X		X		X	
Check engine control system operation (via diagnostic tool)	X	X	X	X	X	X
Check and, if necessary, top off oil level of dual clutch automatic transmission						X
Replace accessory drive belt(s)					X	
Replace spark plugs (#)			X			X
Replace toothed timing drive belt (*)					X	
Change engine oil and oil filter (**)						
Change brake fluid (or every 24 months)		X		X		X

Downloaded from www.Manualslib.com manuals search engine

Mileage or time passed (whichever comes first)	12,000	24,000	36,000	48,000	60,000	72,000
Or Months:	12	24	36	48	60	72
Or Kilometers:	20,000	40,000	60,000	80,000	100,000	120,000
Replace air filter cartridge (***)	X	X	X	X	X	X

(⌂) Recommend using Midtronics tester to check charge status and, if necessary, recharge battery.

(#) The spark plug change interval is mileage based only, yearly intervals do not apply. The following are essential to ensure correct operation and prevent serious damage to the engine:

- Only use spark plugs of the same make and type which are specially certified for such engines (refer to "Fluids, Lubricants and Genuine Parts" in "Maintaining Your Vehicle" for further information).
- Strictly comply with the spark plug replacement interval given in the maintenance schedule for spark plug replacement.
- Contact your Alfa Romeo Dealer if you have questions.

(*) Regardless of the distance covered, the timing belt must be changed every 4 years for particularly demanding use (cold climates, city driving, long periods of idling) or at least every 5 years.

Downloaded from www.Manualslib.com manuals search engine

(**) The actual interval for changing the oil and replacing the engine oil filter depends on the vehicle usage conditions and is signalled by the warning light or message (if present) on the instrument panel or every 12 months.

(***) If the vehicle is operated in a dusty or dirty environment the engine air filter has to be changed every 6,500 miles (10,000 km).

WARNING!

- **You can be badly injured working on or around a motor vehicle. Do only service work for which you have the knowledge and the right equipment. If you have any doubt about your ability to perform a service job, take your vehicle to a competent mechanic.**
- **Failure to properly inspect and maintain your vehicle could result in a component malfunction and effect vehicle handling and performance. This could cause an accident.**

Downloaded from www.Manualslib.com manuals search engine

Downloaded from www.Manualslib.com manuals search engine

IF YOU NEED CONSUMER ASSISTANCE

CONTENTS

- SUGGESTIONS FOR OBTAINING SERVICE FOR YOUR VEHICLE 318
  - Prepare For The Appointment. 318
  - Prepare A List 318
  - Be Reasonable With Requests 318
- IF YOU NEED ASSISTANCE 318
  - Alfa Customer Center 319
  - Alfa Canada Customer Center 319
  - Customer Assistance For The Hearing Or Speech Impaired (TDD/TTY). 319
  - Service Contract 320
- WARRANTY INFORMATION 321
- REPORTING SAFETY DEFECTS 321
  - In The 50 United States And Washington, D.C. 321
  - In Canada. 322
- PUBLICATION ORDER FORMS 322
- DEPARTMENT OF TRANSPORTATION UNIFORM TIRE QUALITY GRADES 323
  - Treadwear. 324
  - Traction Grades 324
  - Temperature Grades. 324

Downloaded from www.Manualslib.com manuals search engine

SUGGESTIONS FOR OBTAINING SERVICE FOR YOUR VEHICLE

Prepare For The Appointment

If you are having warranty work done, be sure to have the right papers with you. Take your warranty folder. All work to be performed may not be covered by the warranty. Discuss additional charges with the service manager. Keep a maintenance log of your vehicle's service history. This can often provide a clue to the current problem.

Prepare A List

Make a written list of your vehicle's problems or the specific work you want done. If you've had an accident or work done that is not on your maintenance log, let the service advisor know.

Be Reasonable With Requests

If you list a number of items and you must have your vehicle by the end of the day, discuss the situation with the service advisor and list the items in order of priority. At many authorized dealers, you may obtain a rental vehicle at a minimal daily charge. If you need a rental, it is advisable to make these arrangements when you call for an appointment.

IF YOU NEED ASSISTANCE

The manufacturer and its authorized dealer are vitally interested in your satisfaction. We want you to be happy with our products and services.

Warranty service must be done by an authorized dealer. We strongly recommend that you take the vehicle to an authorized dealer. They know your vehicle the best, and are most concerned that you get prompt and high quality service. The manufacturer's authorized dealer have the

Downloaded from www.Manualslib.com manuals search engine

facilities, factory-trained technicians, special tools, and the latest information to ensure the vehicle is fixed correctly and in a timely manner.

This is why you should always talk to an authorized dealer service manager first. Most matters can be resolved with this process.

- If for some reason you are still not satisfied, talk to the general manager or owner of the authorized dealer. They want to know if you need assistance.
- If an authorized dealer is unable to resolve the concern, you may contact the manufacturer's customer center.

Any communication to the manufacturer's customer center should include the following information:

- Owner's name and address
- Owner's telephone number (home and office)
- Authorized dealer name
- Vehicle Identification Number (VIN)
- Vehicle delivery date and mileage

Alfa Customer Center

P.O. Box 21–8004 Auburn Hills, MI 48321–8004 Phone: 1–844–Alfa–USA (1–844–253–2872)

Alfa Canada Customer Center

P.O. Box 1621 Windsor, Ontario N9A 4H6 Phone: 1–800–465–2001 (English) Phone: 1–800–387–9983 (French)

Customer Assistance For The Hearing Or Speech Impaired (TDD/TTY)

To assist customers who have hearing difficulties, the manufacturer has installed special TDD (Telecommunication Devices for the Deaf) equipment at its customer center. Any hearing or speech impaired customer, who has access to a TDD or a conventional teletypewriter

Downloaded from www.Manualslib.com manuals search engine

(TTY) in the United States, can communicate with the manufacturer by dialing 1–800–380–CHRY.

Canadian residents with hearing difficulties that require assistance can use the special needs relay service offered by Bell Canada. For TTY teletypewriter users, dial 711 and for Voice callers, dial 1-800-855-0511 to connect with a Bell Relay Service operator.

Service Contract

You may have purchased a service contract for a vehicle to help protect you from the high cost of unexpected repairs after the manufacturer's New Vehicle Limited Warranty expires. The manufacturer stands behind only the manufacturer's service contracts. If you purchased a manufacturer's service contract, you will receive Plan Provisions and an Owner Identification Card in the mail within three weeks of the vehicle delivery date. If you have any questions about the service contract, call the manufacturer's Service Contract National Customer Hotline at 1-800-521-9922 (Canadian residents, call (800) 465–2001 English / (800) 387–9983 French).

The manufacturer will not stand behind any service contract that is not the manufacturer's service contract. It is not responsible for any service contract other than the manufacturer's service contract. If you purchased a service contract that is not a manufacturer's service contract, and you require service after the manufacturer's New Vehicle Limited Warranty expires, please refer to the contract documents, and contact the person listed in those documents.

We appreciate that you have made a major investment when you purchased the vehicle. An authorized dealer has also made a major investment in facilities, tools, and training to assure that you are absolutely delighted with the ownership experience. You will be pleased with their sincere efforts to resolve any warranty issues or related concerns.

Downloaded from www.Manualslib.com manuals search engine

WARNING!

Engine exhaust (internal combustion engines only), some of its constituents, and certain vehicle components contain, or emit, chemicals known to the State of California to cause cancer and birth defects, or other reproductive harm. In addition, certain fluids contained in vehicles and certain products of component wear contain, or emit, chemicals known to the State of California to cause cancer and birth defects, or other reproductive harm.

WARRANTY INFORMATION

See the Warranty Information Booklet, located on the USB card, for the terms and provisions of ALFA ROMEO Automobiles warranties applicable to this vehicle and market.

REPORTING SAFETY DEFECTS

In The 50 United States And Washington, D.C.

If you believe that your vehicle has a defect that could cause a crash or cause injury or death, you should immediately inform the National Highway Traffic Safety Administration (NHTSA) in addition to notifying the manufacturer.

If NHTSA receives similar complaints, it may open an investigation, and if it finds that a safety defect exists in a group of vehicles, it may order a recall and remedy campaign. However, NHTSA cannot become involved in individual problems between you, your authorized dealer, and the manufacturer.

Downloaded from www.Manualslib.com manuals search engine

To contact NHTSA, you may either call the Auto Safety Hotline toll free at 1–888–327–4236 (TTY: 1–800–424–9153), or go to http://www.safercar.gov; or write to: Administrator, NHTSA, 1200 New Jersey Avenue, SE., West Building, Washington, D.C. 20590. You can also obtain other information about motor vehicle safety from http://www.safercar.gov.

In Canada

If you believe that your vehicle has a safety defect, you should contact the Customer Service Department immediately. Canadian customers who wish to report a safety defect to the Canadian government should contact Transport Canada, Motor Vehicle Defect Investigations and Recalls at 1-800-333-0510 or go to http://www.tc.gc.ca/roadsafety/

PUBLICATION ORDER FORMS

To order the following manuals, you may use either the website or the phone numbers listed below. Visa, Mastercard, American Express, and Discover orders are accepted. If you prefer mailing your payment, please call for an order form.

NOTE: A street address is required when ordering manuals (no P.O. Boxes).

Service Manuals

These comprehensive Service Manuals provide the information that students and professional technicians need in diagnosing/troubleshooting, problem solving, maintaining, servicing, and repairing FIAT Group Automobiles vehicles. A complete working knowledge of the vehicle, system, and/or components is written in straightforward language with illustrations, diagrams, and charts.

Downloaded from www.Manualslib.com manuals search engine

Diagnostic Procedure Manuals

Diagnostic Procedure Manuals are filled with diagrams, charts and detailed illustrations. These practical manuals make it easy for students and technicians to find and fix problems on computer-controlled vehicle systems and features. They show exactly how to find and correct problems the first time, using step-by-step troubleshooting and drivability procedures, proven diagnostic tests and a complete list of all tools and equipment.

Owner's Manuals

These Owner's Manuals have been prepared with the assistance of service and engineering specialists to acquaint you with specific FIAT Group Automobiles vehicles. Included are starting, operating, emergency and maintenance procedures as well as specifications, capabilities and safety tips.

- *Call toll free at:*

1–800–890–4038 (U.S.)

1–800–387–1143 (Canada)

Or

- *Visit us on the Worldwide Web at:*

www.techauthority.com

DEPARTMENT OF TRANSPORTATION UNIFORM TIRE QUALITY GRADES

The following tire grading categories were established by the National Highway Traffic Safety Administration. The specific grade rating assigned by the tire's manufacturer in each category is shown on the sidewall of the tires on your vehicle.

All passenger car tires must conform to Federal safety requirements in addition to these grades.

Downloaded from www.Manualslib.com manuals search engine

Treadwear

The Treadwear grade is a comparative rating, based on the wear rate of the tire when tested under controlled conditions on a specified government test course. For example, a tire graded 150 would wear one and one-half times as well on the government course as a tire graded 100. The relative performance of tires depends upon the actual conditions of their use, however, and may depart significantly from the norm due to variations in driving habits, service practices, and differences in road characteristics and climate.

Traction Grades

The Traction grades, from highest to lowest, are AA, A, B, and C. These grades represent the tire's ability to stop on wet pavement, as measured under controlled conditions on specified government test surfaces of asphalt and concrete. A tire marked C may have poor traction performance.

WARNING!

The traction grade assigned to this tire is based on straight-ahead braking traction tests, and does not include acceleration, cornering, hydroplaning, or peak traction characteristics.

Temperature Grades

The temperature grades are A (the highest), B, and C, representing the tire's resistance to the generation of heat and its ability to dissipate heat, when tested under controlled conditions on a specified indoor laboratory test wheel. Sustained high temperature can cause the material of the tire to degenerate and reduce tire life, and excessive temperature can lead to sudden tire failure. The grade C corresponds to a level of performance, which all passenger car tires must meet under the Federal Motor Vehicle Safety Standard No. 109. Grades B and A represent higher levels of performance on the laboratory test wheel, than the minimum required by law.

Downloaded from www.Manualslib.com manuals search engine

WARNING!

The temperature grade for this tire is established for a tire that is properly inflated and not overloaded. Excessive speed, under-inflation, or excessive loading, either separately or in combination, can cause heat buildup and possible tire failure.

Downloaded from www.Manualslib.com manuals search engine

Downloaded from www.Manualslib.com manuals search engine

INDEX

Downloaded from www.Manualslib.com manuals search engine

Adding Engine Coolant (Antifreeze) 267
Adding Fuel 218
Adding Washer Fluid 260
Additives, Fuel 216
Air bag 41
Air Bag
  Knee Impact Bolsters 48
Air bag Deployment 41, 48
Air bag Light 52, 68
Air bag Maintenance. 53
Air Cleaner, Engine (Engine Air Cleaner Filter) 252
Air Conditioner Maintenance 255
Air Conditioning Refrigerant 255, 256
Air Conditioning System 255
Air Pressure, Tires. 196
Alarm System (Security Alarm) 15
Alfa DNA System (Dynamic Car Control System) . .163
Alfa Twin Clutch Transmission 156, 248
  Fluid Type 276, 305
Alterations/Modifications, Vehicle 8
Antifreeze (Engine Coolant). 266, 303
  Capacities 303
  Disposal 269
Anti-Lock Brake System (ABS) 177
Appearance Care 277
Automatic Door Locks 23
Automatic Transaxle 11
Automatic Transmission 156
  Fluid Type 305
Auto Unlock, Doors 23
Auxiliary Electrical Outlet (Power Outlet) 100

Battery. 254
  Keyless Transmitter Replacement (RKE) 19
Belts, Seat 30, 33, 68
Body Mechanism Lubrication. 256
B-Pillar Location 190
Brake Fluid 305

Downloaded from www.Manualslib.com manuals search engine

Brake, Parking 172
Brakes 271
Brake System 174, 271
Anti-Lock (ABS) 177
Master Cylinder 271
Parking 172
Break-In Recommendations, New Vehicle 65
Bulb Replacement. 289, 291
Bulbs, Light. 69, 289

Capacities, Antifreeze (Engine Coolant) 303
Capacities, Fluid 303
Caps, Filler
Oil (Engine) 251
Carbon Monoxide Warning 67, 217
Car Washes 278
Cellular Phone 142
Chains, Tire 207
Chart, Tire Sizing 185
Checking Your Vehicle For Safety 66
Checks, Safety 66
Child Restraint 55, 61
Clean Air Gasoline 215
Cleaning
Wheels 279
Windshield Wiper Blades 257
Climate Control 143
Manual 143
Clutch 271
Clutch Fluid 271
Compact Spare Tire 202
Contract, Service 320
Coolant (Antifreeze) 303, 304
Cooling System. 265
Adding Coolant (Antifreeze) 267
Coolant Level 266, 270
Disposal of Used Coolant 269
Drain, Flush, and Refill 266

Downloaded from www.Manualslib.com manuals search engine

Inspection 270
Points to Remember 269, 270
Pressure Cap 269
Selection of Coolant (Antifreeze) 266
Corrosion Protection 277
Cupholders 104
Customer Assistance 318

Daytime Running Lights 85
Dealer Service. 249
Deck Lid 27
Deck Lid, Release 80
Defroster, Windshield 68
Delay (Intermittent) Wipers 89
Diagnostic System, Onboard 248
Dimmer Control 87
Disposal
Antifreeze (Engine Coolant) 269
Door Locks 21
Child-Protection Door Lock — Rear Doors 23
Power Door Locks 18
Doors 21
Driving
Through Flowing, Rising, or Shallow Standing Water 170

Electrical Outlet, Auxiliary (Power Outlet). 100
Electrical Power Outlets. 100
Electric Remote Mirrors. 75
Electronic Brake Control System 175
Electronic Speed Control (Cruise Control) 92
Electronic Vehicle Information Center (EVIC)
Activation Trip Data (Trip B On) 129
Autoclose 132
Average Fuel Consumption 141
Average Speed 141
Buzzer Volume (Adjusting The Failure/Warning Buzzer Volume) 134

Downloaded from www.Manualslib.com manuals search engine

Change Engine Oil 137
Change Engine Oil Indicator System 137
Daytime Running Lamps (DRL) 136
Distance Traveled 141
Electronic Vehicle Information Center (EVIC) 125
Electronic Vehicle Information Center (EVIC) Setup Menu 127
Exit Menu 137
Exit Trip 139
Fuel Range 141
Indications On Display 140
Instant Fuel Consumption 141
Language (Selecting The Language) 134
New Trip 139
Oil Life 137
Service (Scheduled Servicing) 135
Set Date 131
Speed Beep (Speed Limit) 128
Start Of Trip Procedure 139
Time Adjustment (Clock) 130
Travel Time 141
Trip Button 138
Trip Computer 137
Trip Functions 138
Units (Set Units) 133
Values Displayed 140
Emergency, In Case of
Freeing Vehicle When Stuck 236
Hazard Warning Flasher 224
Jump Starting 232
Overheating 224
Engine
Air Cleaner 252
Break-In Recommendations 65
Checking Oil Level 250
Compartment 247
Cooling 265
Exhaust Gas Caution 67, 217

Downloaded from www.Manualslib.com manuals search engine

Fails to Start 155
Flooded, Starting 155
Fuel Requirements 214
Jump Starting 232
Oil 250, 303
Oil Filler Cap 251
Oil Selection 251
Overheating 224
Starting 154
Enhanced Accident Response Feature. 50, 238
Euro Twin Clutch Transmission
Fluid Type 277
Exhaust Gas Caution 67, 217
Exhaust System 67, 263
Exterior Lights 69

Filters
Air Cleaner 252
Engine Fuel 304
Engine Oil 252
Engine Oil Disposal 252
Flashers
Hazard Warning 224
Turn Signal 69
Flooded Engine Starting 155
Fluid, Brake 305
Fluid Capacities 303
Fluid Leaks 69
Fluids, Lubricants and Genuine Parts 304
Four-Way Hazard Flasher 224
Freeing A Stuck Vehicle 236
Fuel. 214
Adding 218
Additives 216
Capacity 303
Clean Air 215
Gasoline 214
Materials Added 216

Downloaded from www.Manualslib.com manuals search engine

Octane Rating 214
Requirements 214
Tank Capacity 303
Fueling 218
Fuses 284

Gasoline, Clean Air 215
Gasoline (Fuel) 214, 303
Gasoline, Reformulated 215
General Information 142, 214
General Maintenance 249
Glass Cleaning 282

Hazard
Driving Through Flowing, Rising, or Shallow Standing Water 170
Hazard Warning Flasher 224
Headlights 84
Cleaning 281
Passing 85
Head Restraints 80
Heated Mirrors 76
Heater 143, 145
Holder, Cup 104

Ignition 11
Key 11
Ignition Key Removal 11
Illuminated Entry 17
Immobilizer (Sentry Key) 13
Infant Restraint 55, 58
Inside Rearview Mirror 74
Instrument Cluster 112
Instrument Cluster 111
Instrument Panel and Controls 110
Instrument Panel Cover 282
Instrument Panel Lens Cleaning 283
Interior Appearance Care 281

Downloaded from www.Manualslib.com manuals search engine

Interior Lights 87
Intermittent Wipers (Delay Wipers) 89
Introduction 4

Jump Starting 232

Key Fob
  Lock The Doors 18
  Unlock The Doors 18
Key-In Reminder 13
Key, Replacement 14
Keys 11
Key, Sentry (Immobilizer) 13

Lane Change Assist 86
Lap/Shoulder Belts. 33
Latches 69
Lead Free Gasoline 214
Leaks, Fluid 69
Life of Tires 205
Light Bulbs 69, 289
Lights 69, 83, 84
  Airbag 52, 68
  Bulb Replacement 291
  Exterior 69
  Hazard Warning Flasher 224
  Illuminated Entry 17
  Instrument Cluster 112
  Interior 87
  Park 85
  Passing 85
  Service 291
  Tire Pressure Monitoring (TPMS) 112
  Turn Signal 69
  Warning (Instrument Cluster Description) 112
Loading Vehicle
  Tires 190
Locks 21

Downloaded from www.Manualslib.com manuals search engine

Auto Unlock 23
Door 21
Power Door 21
Lubrication, Body 256
Lug Nuts 225

Maintenance Free Battery. 254
Maintenance, General 249
Maintenance Procedures 249
Maintenance Schedule 308
Manual, Service 322
Manual Transmission
Lubricant Selection 305
Master Cylinder (Brakes) 271
Mirrors 74
Electric Remote 75
Heated 76
Outside 75
Rearview 74
Modifications/Alterations, Vehicle 8
Monitor, Tire Pressure System 209
Multi-Function Control Lever 84

New Vehicle Break-In Period 65

Occupant Restraints. 30, 48
Octane Rating, Gasoline (Fuel) 214
Oil, Engine 250, 303, 304
Capacity 303
Change Interval 251
Checking 250
Disposal 252
Filter 252
Filter Disposal 252
Materials Added to 252
Recommendation 251, 303
Viscosity 251
Oil Filter, Selection 252

Downloaded from www.Manualslib.com manuals search engine

Onboard Diagnostic System 248
Operating Precautions 248
Operator Manual (Owner's Manual) 5
Outside Rearview Mirrors 75
Overheating, Engine 224
Owner's Manual (Operator Manual) 5, 322

Paint Care 277
Parking Brake. 172
Passing Light 85
Pets. 65
Pets, Transporting. 65
Placard, Tire and Loading Information 191
Power
  Door Locks 21
  Mirrors 75
  Windows 25
Pregnant Women and Seat Belts. 38
Pretensioners
  Seat Belts 38

Radial Ply Tires 198
Radio Operation 142
Reclining Front Seats 78
Recreational Towing 221
Reformulated Gasoline 215
Refrigerant 256
Reminder, Seat Belt. 32
Remote Keyless Entry (RKE)
  FCC General Information 21
  Remote Keyless Entry (RKE) 17
  Unlock The Doors 18
Replacement Bulbs 289
Replacement Keys 14
Replacement Parts. 248
Replacement Tires 206
Reporting Safety Defects 321
Restraint, Head 80

Downloaded from www.Manualslib.com manuals search engine

Restraints, Child 55
Restraints, Infant 58
Restraints, Occupant 30
Rocking Vehicle When Stuck 236
Rotation, Tires 208

Safety Checks Inside Vehicle 68
Safety Checks Outside Vehicle 69
Safety Defects, Reporting 321
Safety, Exhaust Gas 67
Safety Information, Tire 183
Safety Tips 66
Schedule, Maintenance 308
Seat Belt
  Automatic Locking Retractor (ALR) 39
Seat Belt Maintenance 283
Seat Belt Reminder 32
Seat Belts 30, 31, 33, 68
  Child Restraint 55, 58, 61
  Front Seat 31
  Inspection 68
  Operating Instructions 35
  Pregnant Women 38
  Pretensioners 38
  Untwisting Procedure 37
Seats 77
  Adjustment 77
  Reclining 78
Security Alarm 15
SENTRY KEY®
  FCC General Information 14
Sentry Key (Immobilizer) 13
Service Assistance 318
Service Contract 320
Service Manuals 322
Shoulder Belts 33
Signals, Turn 69
Snow Chains (Tire Chains) 207

Downloaded from www.Manualslib.com manuals search engine

Snow Tires 200
Spare Tire 202, 203
Spark Plugs 304
Speed Control (Cruise Control) 92
Starting 154
  Automatic Transmission 154
  Cold Weather 155
  Engine Fails to Start 155
Steering
  Column Lock 91
  Tilt Column 91
  Wheel, Tilt 91
Storage 289
Storage, Vehicle. 289
Storing Your Vehicle 289
Stuck, Freeing. 236

Telescoping Steering Column. 91
Tilt Steering Column. 91
Tire and Loading Information Placard 190, 191
Tire Markings. 183
Tires. 69, 195, 323
  Aging (Life of Tires) 205
  Air Pressure 195
  Chains 207
  Compact Spare 202
  General Information 195
  High Speed 198
  Inflation Pressures 196
  Life of Tires 205
  Load Capacity 190, 191
  Pressure Monitor System (TPMS) 209
  Pressure Warning Light 112
  Quality Grading 323
  Radial 198
  Replacement 206
  Rotation 208
  Safety 183, 195

Downloaded from www.Manualslib.com manuals search engine

Sizes 185
Snow Tires 200
Spinning 204
Tread Wear Indicators 204
Tire Safety Information 183
To Open Deck Lid 80
Towing 221
Recreational 221
Towing Eyes. 240
Towing Vehicle Behind a Motorhome 221
Traction 169
Trailer Towing 221
Transaxle
Automatic 11
Transmission 157
Automatic 156
Fluid 275
Maintenance 275
Transmitter Battery Service (Remote Keyless Entry) . .19
Transporting Passengers 66
Transporting Pets 65
Tread Wear Indicators 204

Uniform Tire Quality Grades 323
Unleaded Gasoline 214
Untwisting Procedure, Seat Belt 37

Vehicle Identification Number (VIN) 7
Vehicle Loading 191
Vehicle Modifications/Alterations 8
Vehicle Security Alarm (Security Alarm) 15
Vehicle Storage 289
Ventilation System. 143

Warning Flasher, Hazard 224
Warning Lights (Instrument Cluster Description) . . .112
Warnings and Cautions. 7
Warranty Information 4, 321

Downloaded from www.Manualslib.com manuals search engine

Washer
Adding Fluid 260
Washers, Windshield. 89
Washing Vehicle 278
Water
Driving Through 170
Wheel and Wheel Trim 279
Wheel and Wheel Trim Care 279
Windows 25
Power 25
Windshield Defroster 68
Windshield Washers 89
Windshield Wiper Blades. 257
Windshield Wipers 89
Wiper Blade Replacement 257
Wipers, Intermittent 89

Downloaded from www.Manualslib.com manuals search engine

ISMITTING

ncorporated into this
de immunity to radio
adios and telephone
y by trained person-
l during installation.

uld be made directly
e battery as possible.
uld be made to body
e battery connection.
l.

d be mounted on the
Care should be used
bases. Magnets may
of the compass on

The antenna cable should be as short as practical and routed away from the vehicle wiring when possible. Use only fully shielded coaxial cable.

Carefully match the antenna and cable to the radio to ensure a low Standing Wave Ratio (SWR).

Mobile radio equipment with output power greater than normal may require special precautions.

All installations should be checked for possible interference between the communications equipment and the vehicle's electronic systems.

Downloaded from www.Manualslib.com manuals search engine

4C

SERVICE

STICK WITH THE SPECIALISTS®

Chrysler Group LLC

154C-126-AB

Second Edition

Printed in U.S.A.

Downloaded from www.Manualslib.com manuals search engine