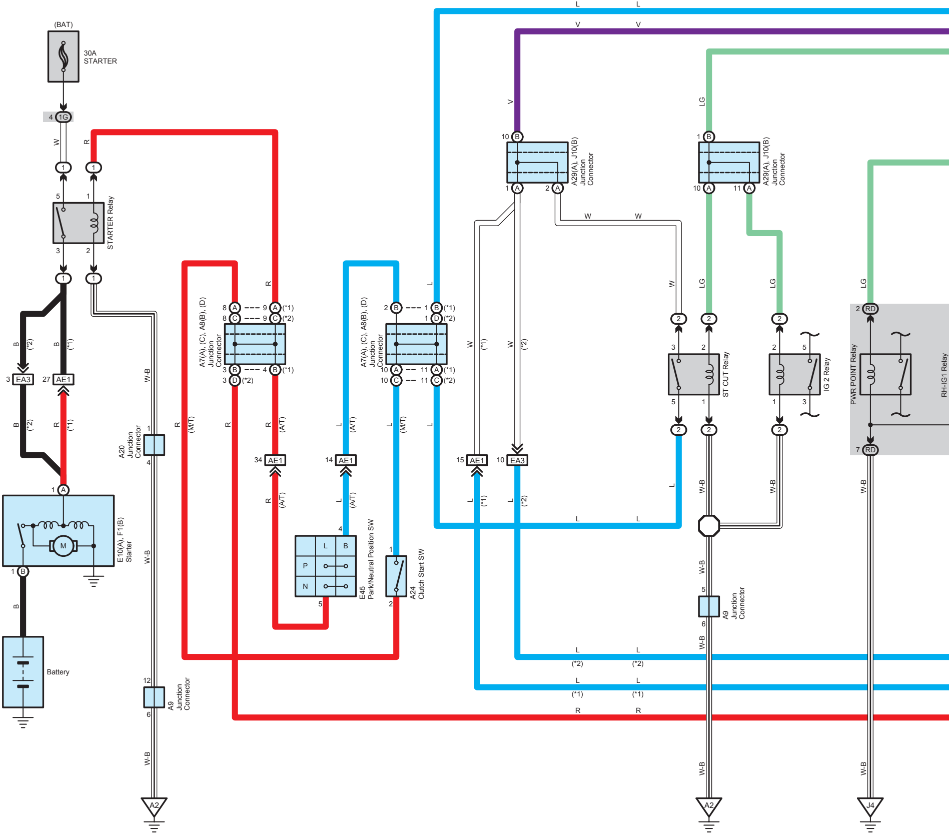

(BAT)
30A STARTER
4 1G
W
R
1
1
5
1
STARTER Relay
3
2
1
1
B (*2)
B (*1)
3 EA3
27 AE1
B (*2)
R (*1)
1 A
E10(A), F1(B) Starter
M
1 B
B
Battery
W-B
1
A20 Junction Connector
4
W-B
12
A9 Junction Connector
6
W-B
A2
R
(M/T)
R
A7(A), (C), A8(B), (D) Junction Connector
8 A 9 A (*1)
8 C 9 C (*2)
3 B 4 B (*1)
3 D (*2)
R
R (A/T)
34 AE1
R (A/T)
14 AE1
L (A/T)
L (A/T)
4
L B
P
N
5
E45 Park/Neutral Position SW
A7(A), (C), A8(B), (D) Junction Connector
2 B 1 B (*1)
1 D (*2)
10 A 11 A (*1)
10 C 11 C (*2)
L
L (M/T)
L
1
A24 Clutch Start SW
2
L L
V V
V
10 B
A29(A), J10(B) Junction Connector
1 A 2 A
W W
W (*1)
W (*2)
15 AE1
10 EA3
L (*1)
L (*2)
L L
L L (*2) (*2)
L L (*1) (*1)
R R
LG
1 B
A29(A), J10(B) Junction Connector
10 A 11 A
W
LG
LG
2
2
2
3 2
ST CUT Relay
5 1
2
2
L
2 5
IG 2 Relay
1 3
2
W-B
W-B
W-B
5
A9 Junction Connector
6
W-B
W-B
A2
LG
2 RD
PWR POINT Relay
RH-IG1 Relay
7 RD
W-B
W-B
J4

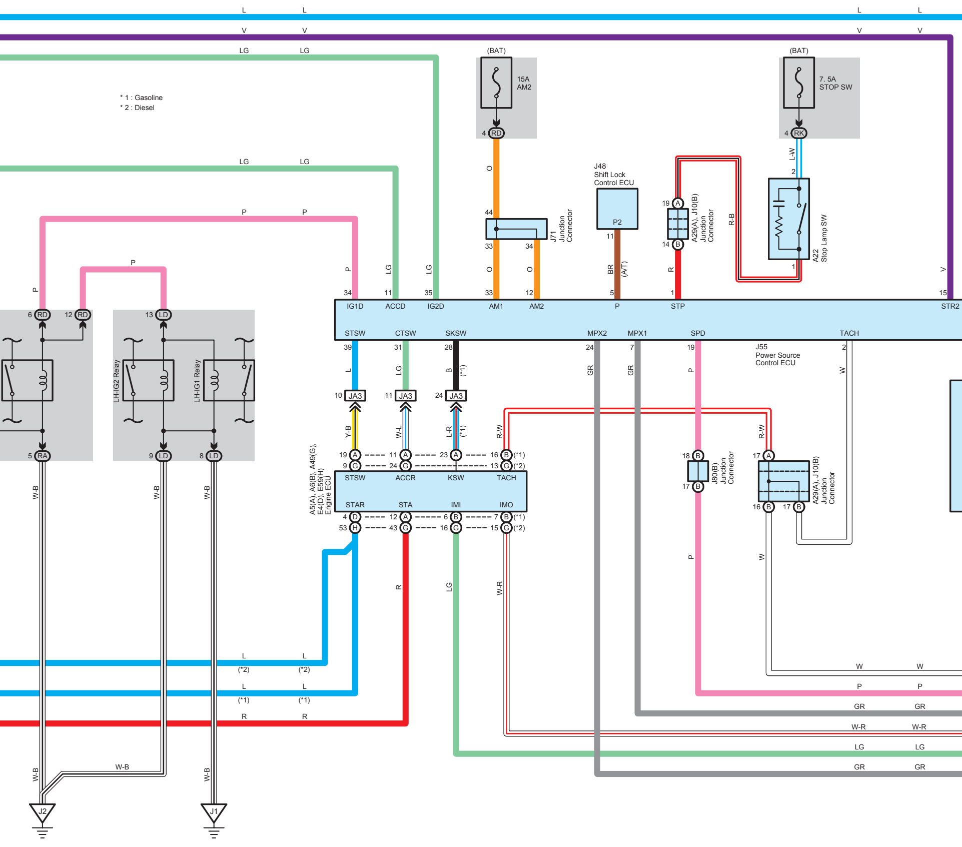
* 1 : Gasoline
* 2 : Diesel

L
V
LG
P
(BAT)
15A
AM2
4 RD
O
44
33
34
J71
Junction
Connector
J48
Shift Lock
Control ECU
P2
11
BR
(A/T)
19 A
14 B
A29(A), J10(B)
Junction
Connector
R-B
R
(BAT)
7. 5A
STOP SW
4 RK
L-W
2
1
A22
Stop Lamp SW
6 RD
12 RD
13 LD
LH-IG2 Relay
LH-IG1 Relay
5 RA
9 LD
8 LD
W-B
J2
J1
34
11
35
33
12
5
1
15
IG1D
ACCD
IG2D
AM1
AM2
P
STP
STR2
STSW
CTSW
SKSW
MPX2
MPX1
SPD
TACH
39
31
28
24
7
19
2
J55
Power Source
Control ECU
GR
W
B
(*1)
10 JA3
11 JA3
24 JA3
Y-B
W-L
L-R
R-W
19 A
9 G
11 A
24 G
23 A
16 B (*1)
13 G (*2)
STSW
ACCR
KSW
TACH
STAR
STA
IMI
IMO
4 D
53 H
12 A
43 G
6 B
16 G
7 B (*1)
15 G (*2)
A5(A), A6(B), A49(G),
E4(D), E59(H)
Engine ECU
18 B
17 B
J80(B)
Junction
Connector
17 A
16 B
17 B
A29(A), J10(B)
Junction
Connector
W-R
(*2)
(*1)

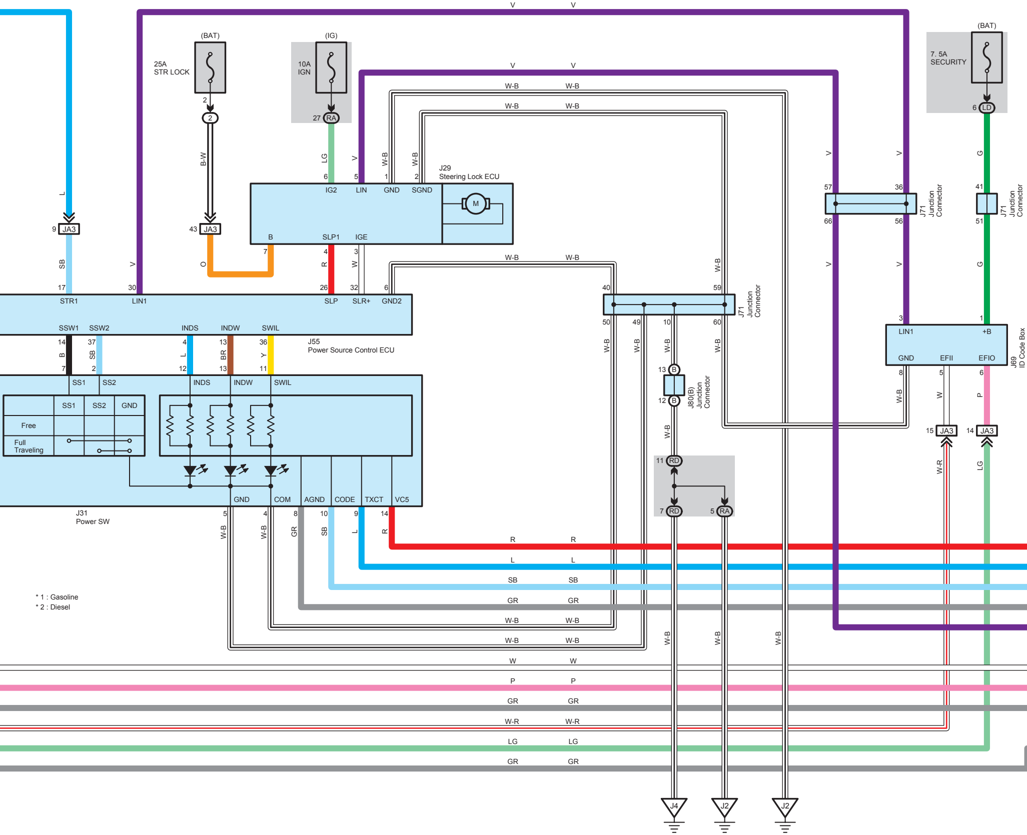
(BAT)
25A
STR LOCK
(IG)
10A
IGN
(BAT)
7. 5A
SECURITY
2
27 RA
6 LD
B-W
LG
V
W-B
G
J29
Steering Lock ECU
IG2
LIN
GND
SGND
M
B
SLP1
IGE
9 JA3
43 JA3
L
SB
O
R
W
STR1
LIN1
SLP
SLR+
GND2
SSW1
SSW2
INDS
INDW
SWIL
J55
Power Source Control ECU
B
BR
Y
J71
Junction
Connector
J80(B)
Junction
Connector
13 B
12 B
11 RD
7 RD
5 RA
J69
ID Code Box
LIN1
+B
GND
EFII
EFIO
P
15 JA3
14 JA3
W-R
SS1
SS2
GND
Free
Full
Traveling
INDS
INDW
SWIL
GND
COM
AGND
CODE
TXCT
VC5
J31
Power SW
GR
J4
J2
J2

* 1 : Gasoline

* 2 : Diesel

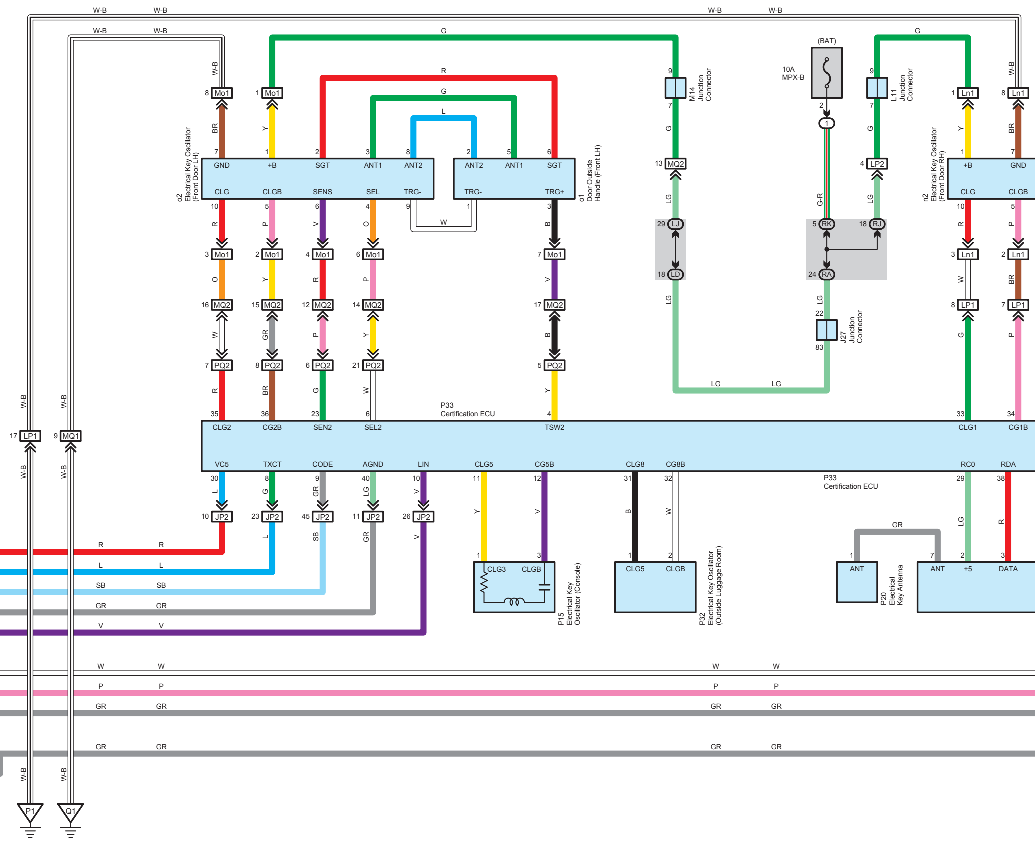
W-B
G
R
L
(BAT)
10A
MPX-B
M14
Junction
Connector
L11
Junction
Connector
J27
Junction
Connector
Mo1
Ln1
MQ2
LP2
LP1
PQ2
MQ1
JP2
LJ
LD
RK
RJ
RA
o2
Electrical Key Oscillator
(Front Door LH)
GND
+B
SGT
ANT1
ANT2
CLG
CLGB
SENS
SEL
TRG-
TRG+
o1
Door Outside
Handle (Front LH)
n2
Electrical Key Oscillator
(Front Door RH)
BR
Y
O
V
P
W
B
GR
LG
G-R
SB
P33
Certification ECU
CLG2
CG2B
SEN2
SEL2
TSW2
CLG1
CG1B
VC5
TXCT
CODE
AGND
LIN
CLG5
CG5B
CLG8
CG8B
RC0
RDA
P15
Electrical Key
Oscillator (Console)
CLG3
P32
Electrical Key Oscillator
(Outside Luggage Room)
P20
Electrical
Key Antenna
ANT
+5
DATA
P1
Q1

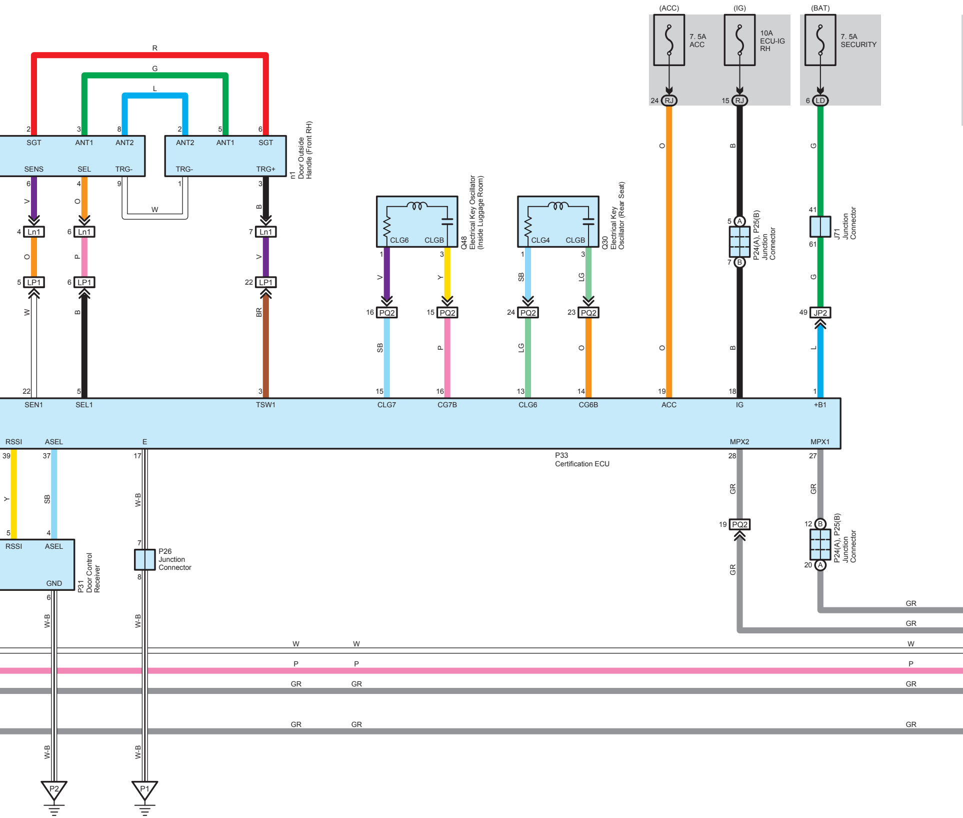
(ACC)
7. 5A
ACC
(IG)
10A
ECU-IG
RH
(BAT)
7. 5A
SECURITY
24 RJ
15 RJ
6 LD
R
G
L
SGT
ANT1
ANT2
SENS
SEL
TRG-
TRG+
W
n1
Door Outside
Handle (Front RH)
Ln1
LP1
Q48
Electrical Key Oscillator
(Inside Luggage Room)
Q30
Electrical Key
Oscillator (Rear Seat)
CLG6
CLGB
CLG4
PQ2
P24(A), P25(B)
Junction
Connector
J71
Junction
Connector
JP2
SEN1
SEL1
TSW1
CLG7
CG7B
CG6B
ACC
IG
+B1
RSSI
ASEL
E
MPX2
MPX1
P33
Certification ECU
P26
Junction
Connector
P31
Door Control
Receiver
GND
W-B
GR
P
P1
P2

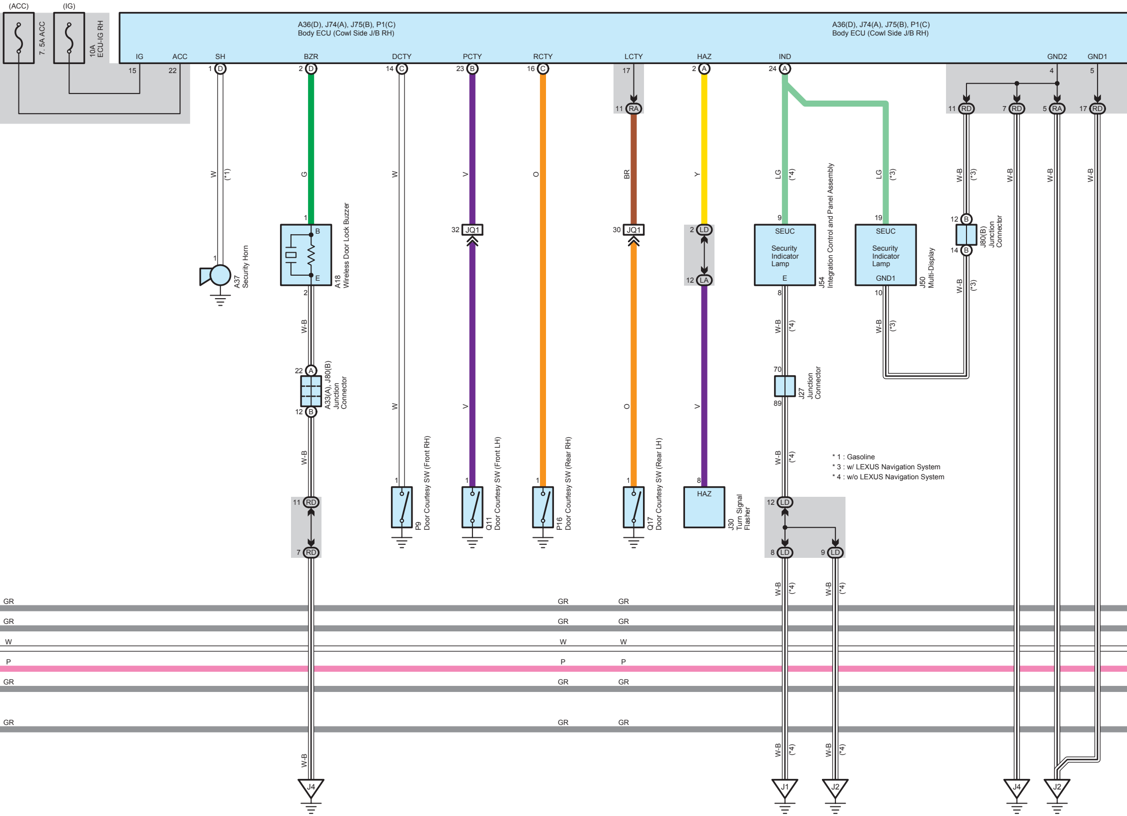
(ACC)
(IG)
7. 5A ACC
10A ECU-IG RH
A36(D), J74(A), J75(B), P1(C)
Body ECU (Cowl Side J/B RH)
A36(D), J74(A), J75(B), P1(C)
Body ECU (Cowl Side J/B RH)
IG
ACC
SH
BZR
DCTY
PCTY
RCTY
LCTY
HAZ
IND
GND2
GND1
15
22
1 D
2 D
14 C
23 B
16 C
17
2 A
24 A
4
5
11 RA
11 RD
7 RD
5 RA
17 RD
W (*1)
G
W
V
O
BR
Y
LG (*4)
LG (*3)
W-B (*3)
W-B
W-B
W-B
A37 Security Horn
1
B
E
2
A18 Wireless Door Lock Buzzer
32 JQ1
30 JQ1
2 LD
12 LA
9
SEUC
Security Indicator Lamp
E
8
J54 Integration Control and Panel Assembly
19
SEUC
Security Indicator Lamp
GND1
10
J50 Multi-Display
12 B
14 B
J80(B) Junction Connector
W-B (*3)
W-B
22 A
A33(A), J80(B) Junction Connector
12 B
W-B (*4)
W-B (*3)
70
J27 Junction Connector
89
W
V
O
V
W-B
W-B (*4)
1
1
1
1
8
P9 Door Courtesy SW (Front RH)
Q11 Door Courtesy SW (Front LH)
P16 Door Courtesy SW (Rear RH)
Q17 Door Courtesy SW (Rear LH)
HAZ
J30 Turn Signal Flasher
11 RD
7 RD
12 LD
8 LD
9 LD
W-B (*4)
W-B (*4)
GR
GR
W
P
GR
GR
W-B
W-B (*4)
W-B (*4)
J4
J1
J2
J4
J2

* 1 : Gasoline
* 3 : w/ LEXUS Navigation System
* 4 : w/o LEXUS Navigation System

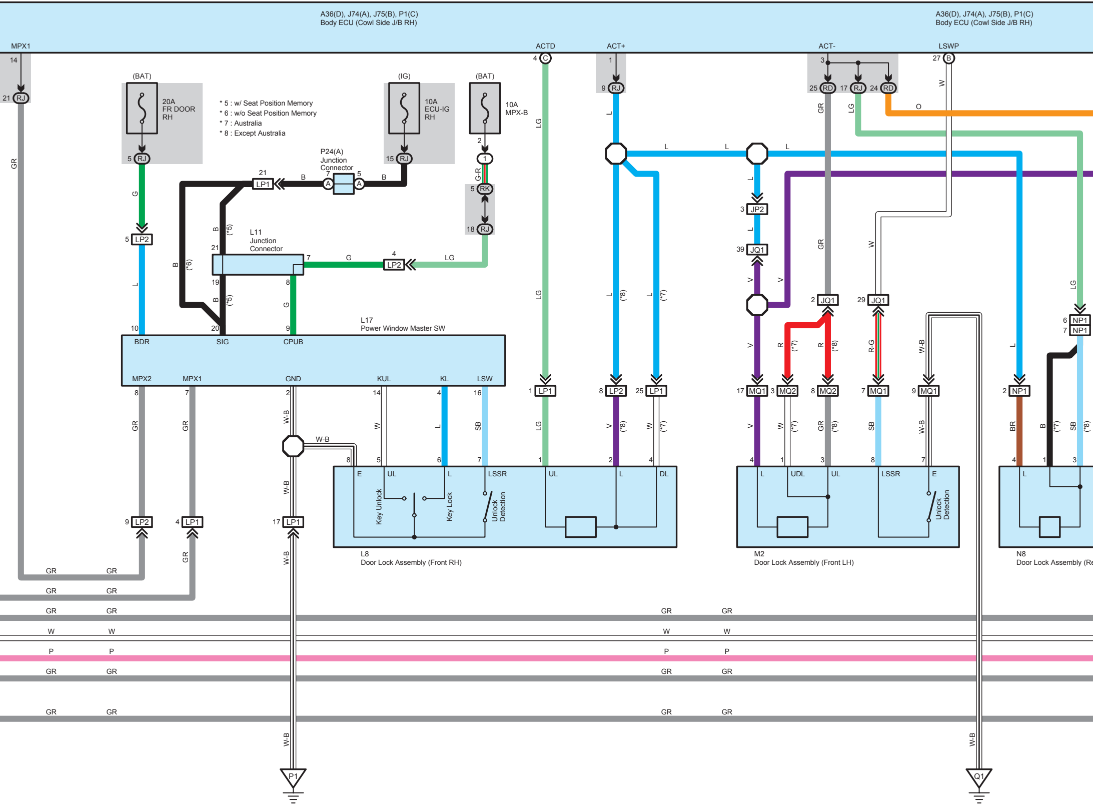
A36(D), J74(A), J75(B), P1(C)
Body ECU (Cowl Side J/B RH)
A36(D), J74(A), J75(B), P1(C)
Body ECU (Cowl Side J/B RH)
MPX1
ACTD
ACT+
ACT-
LSWP
14
21
RJ
GR
(BAT)
20A
FR DOOR
RH
5
RJ
G
5
LP2
L
10
(IG)
10A
ECU-IG
RH
15
RJ
(BAT)
10A
MPX-B
2
1
G-R
5
RK
18
RJ
P24(A)
Junction
Connector
21
LP1
B
7
A
5
A
B
B
(*5)
B
(*6)
L11
Junction
Connector
21
7
G
4
LP2
LG
19
8
B
(*5)
G
20
9
L17
Power Window Master SW
BDR
SIG
CPUB
MPX2
MPX1
GND
KUL
KL
LSW
8
7
2
14
4
16
GR
GR
W-B
W
L
SB
W-B
8
5
6
7
E
UL
L
LSSR
Key Unlock
Key Lock
Unlock
Detection
UL
L
DL
L8
Door Lock Assembly (Front RH)
9
LP2
4
LP1
17
LP1
GR
W-B
4
C
LG
LG
1
LP1
LG
1
1
9
RJ
L
L
L
L
(*8)
L
(*7)
8
LP2
25
LP1
V
(*8)
W
(*7)
2
4
3
25
RD
17
RJ
24
RD
GR
LG
O
27
B
W
L
3
JP2
L
39
JQ1
V
V
GR
W
2
JQ1
29
JQ1
R
(*7)
R
(*8)
R-G
W-B
17
MQ1
3
MQ2
8
MQ2
7
MQ1
9
MQ1
V
W
(*7)
GR
(*8)
SB
W-B
4
1
3
8
7
L
UDL
UL
LSSR
E
Unlock
Detection
M2
Door Lock Assembly (Front LH)
LG
6
NP1
7
NP1
L
2
NP1
BR
B
(*7)
SB
(*8)
4
1
3
L
N8
Door Lock Assembly (Re
GR
GR
GR
GR
GR
GR
W
W
P
P
GR
GR
GR
GR
GR
GR
W
W
P
P
GR
GR
GR
GR
W-B
P1
W-B
Q1

* 5 : w/ Seat Position Memory
* 6 : w/o Seat Position Memory
* 7 : Australia
* 8 : Except Australia

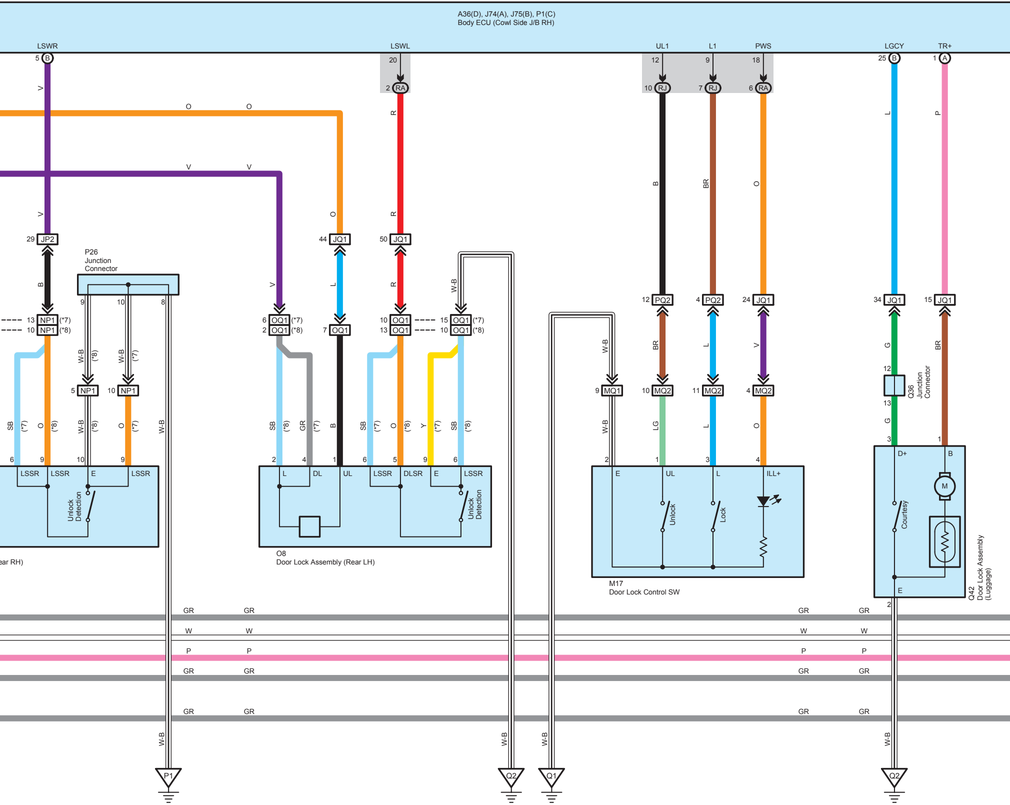
A36(D), J74(A), J75(B), P1(C)
Body ECU (Cowl Side J/B RH)
LSWR
LSWL
UL1
L1
PWS
LGCY
TR+
5 B
20
2 RA
12
10 RJ
9
7 RJ
18
6 RA
25 B
1 A
V
O
R
B
BR
L
P
29 JP2
44 JQ1
50 JQ1
12 PQ2
4 PQ2
24 JQ1
34 JQ1
15 JQ1
P26
Junction
Connector
W-B
G
12
13
Q36
Junction
Connector
13 NP1 (*7)
10 NP1 (*8)
6 OQ1 (*7)
2 OQ1 (*8)
7 OQ1
10 OQ1
13 OQ1
15 OQ1 (*7)
10 OQ1 (*8)
5 NP1
10 NP1
9 MQ1
10 MQ2
11 MQ2
4 MQ2
SB
GR
Y
LG
(*7)
(*8)
LSSR
E
Unlock
Detection
ear RH)
L
DL
UL
DLSR
O8
Door Lock Assembly (Rear LH)
ILL+
Unlock
Lock
M17
Door Lock Control SW
D+
Courtesy
M
Q42
Door Lock Assembly
(Luggage)
GR
W
P1
Q2
Q1

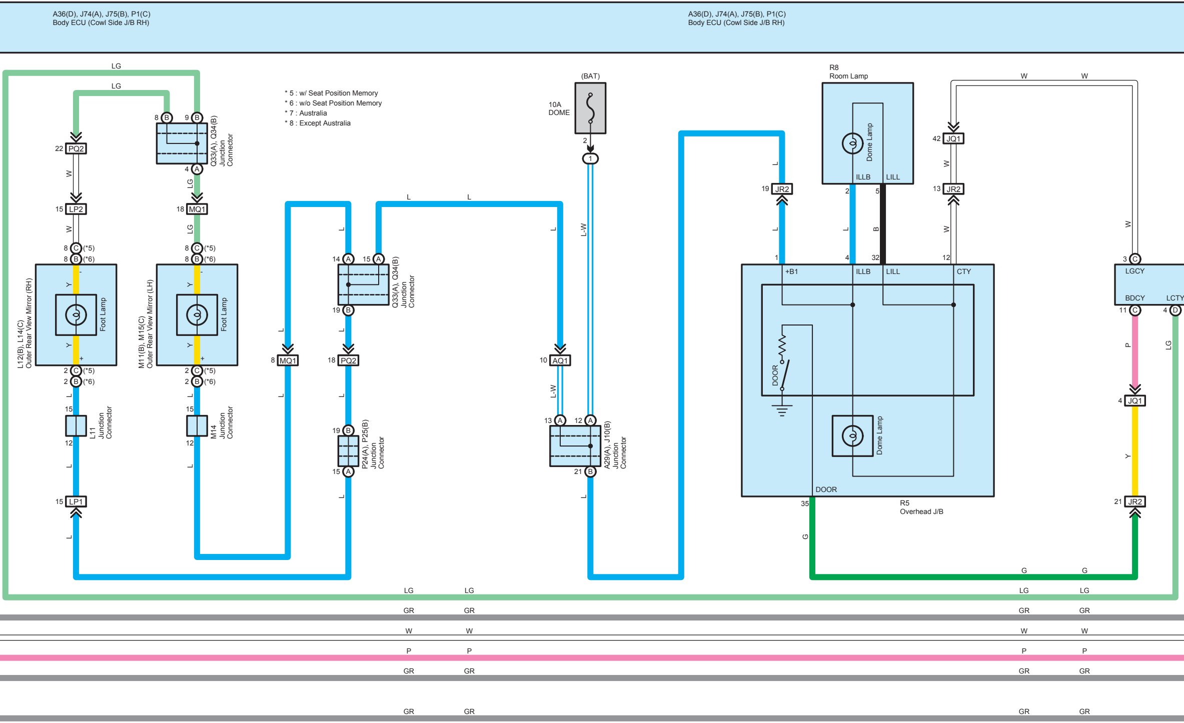
A36(D), J74(A), J75(B), P1(C)
Body ECU (Cowl Side J/B RH)
A36(D), J74(A), J75(B), P1(C)
Body ECU (Cowl Side J/B RH)
LG
LG
PQ2
LP2
W
C (*5)
B (*6)
L12(B), L14(C)
Outer Rear View Mirror (RH)
Foot Lamp
Y
LP1
L11
Junction Connector
Q33(A), Q34(B)
Junction Connector
MQ1
M11(B), M15(C)
Outer Rear View Mirror (LH)
M14
Junction Connector
L
MQ1
PQ2
P24(A), P25(B)
Junction Connector
(BAT)
10A
DOME
AQ1
L-W
A29(A), J10(B)
Junction Connector
R8
Room Lamp
Dome Lamp
ILLB
LILL
JR2
JQ1
B
+B1
CTY
DOOR
R5
Overhead J/B
G
LGCY
BDCY
LCTY
P
GR
W
P

* 5 : w/ Seat Position Memory
* 6 : w/o Seat Position Memory
* 7 : Australia
* 8 : Except Australia

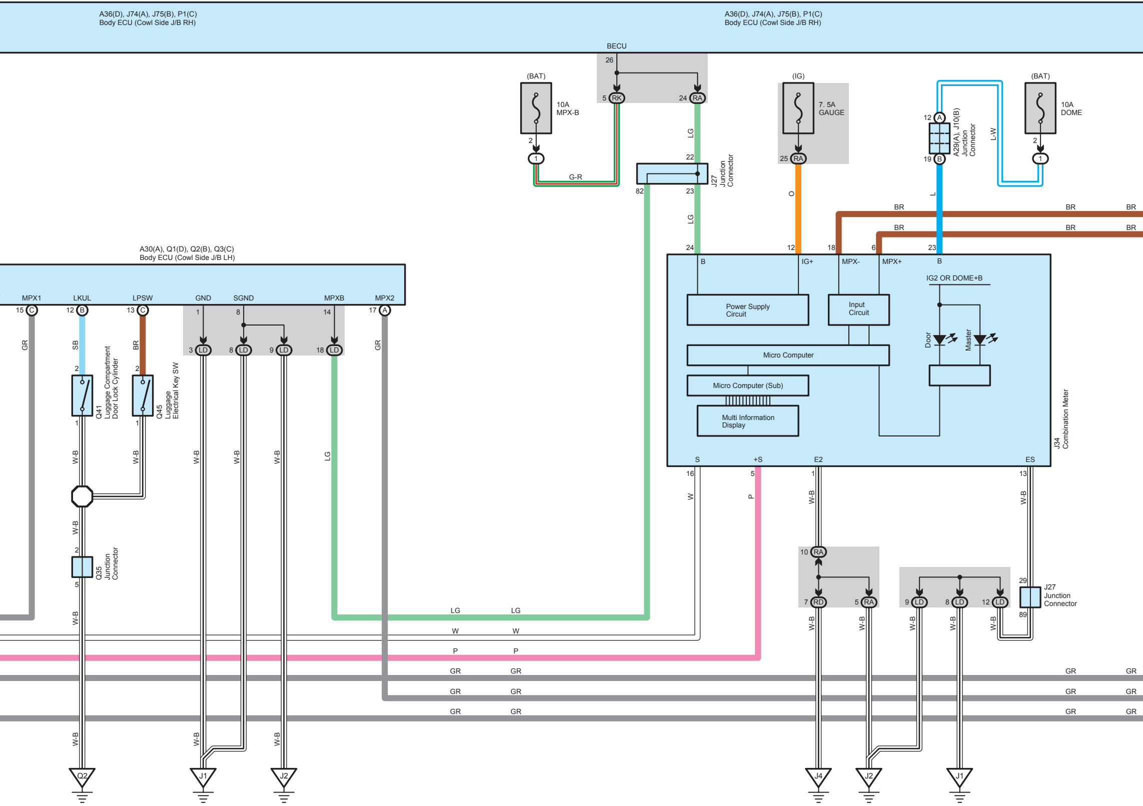
A36(D), J74(A), J75(B), P1(C)
Body ECU (Cowl Side J/B RH)
A36(D), J74(A), J75(B), P1(C)
Body ECU (Cowl Side J/B RH)
BECU
26
5 RK
24 RA
(BAT)
10A
MPX-B
2
1
G-R
LG
22
J27
Junction
Connector
82
23
LG
24
(IG)
7. 5A
GAUGE
25 RA
O
12
A
A29(A), J10(B)
Junction
Connector
19 B
L
L-W
(BAT)
10A
DOME
2
1
BR
BR
BR
BR
BR
BR
12
18
6
23
B
IG+
MPX-
MPX+
B
IG2 OR DOME+B
Power Supply
Circuit
Input
Circuit
Door
Master
Micro Computer
Micro Computer (Sub)
Multi Information
Display
J34
Combination Meter
S
+S
E2
ES
16
5
1
13
W
P
W-B
W-B
10 RA
29
J27
Junction
Connector
89
7 RD
5 RA
9 LD
8 LD
12 LD
W-B
W-B
W-B
W-B
W-B
J4
J2
J1
A30(A), Q1(D), Q2(B), Q3(C)
Body ECU (Cowl Side J/B LH)
MPX1
LKUL
LPSW
GND
SGND
MPXB
MPX2
15 C
12 B
13 C
1
8
14
17 A
3 LD
8 LD
9 LD
18 LD
GR
SB
BR
GR
2
2
Q41
Luggage Compartment
Door Lock Cylinder
Q45
Luggage
Electrical Key SW
1
1
W-B
W-B
W-B
W-B
W-B
LG
W-B
2
Q35
Junction
Connector
5
W-B
LG
LG
W
W
P
P
GR
GR
GR
GR
GR
GR
GR
GR
GR
GR
GR
GR
W-B
W-B
W-B
Q2
J1
J2

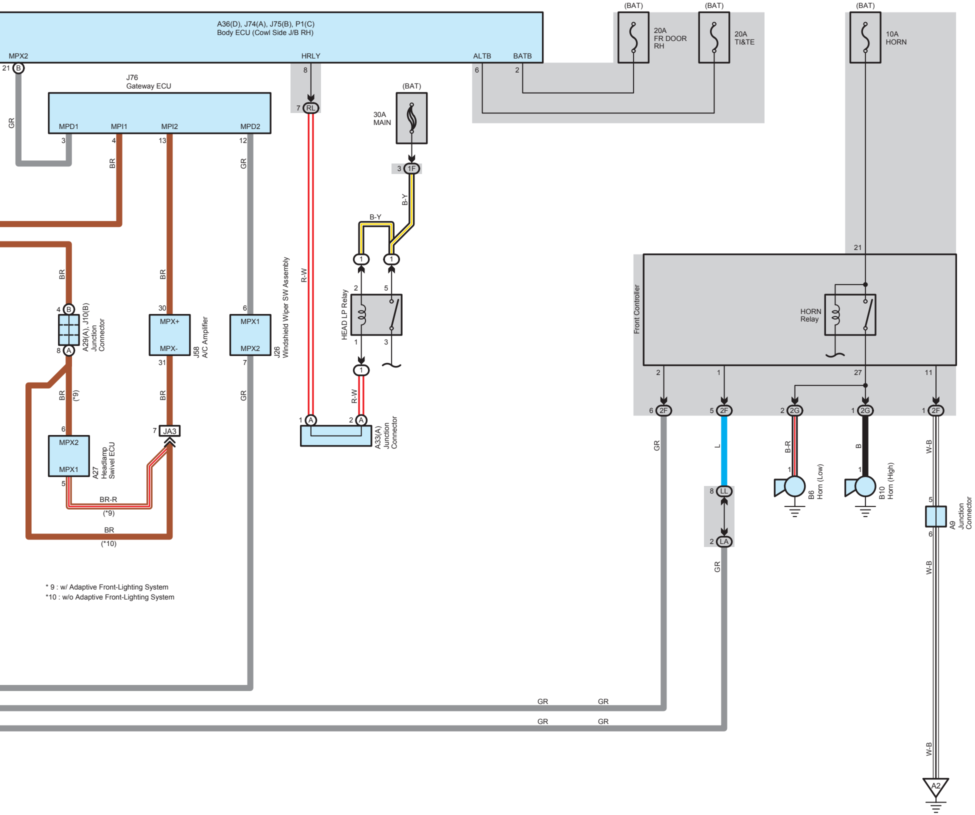
A36(D), J74(A), J75(B), P1(C)
Body ECU (Cowl Side J/B RH)
MPX2
HRLY
ALTB
BATB
21
B
8
6
2
(BAT)
20A
FR DOOR
RH
(BAT)
20A
TI&TE
(BAT)
10A
HORN
J76
Gateway ECU
MPD1
MPI1
MPI2
MPD2
3
4
13
12
GR
BR
BR
GR
7
RL
(BAT)
30A
MAIN
3
1F
B-Y
B-Y
R-W
1
1
2
5
HEAD LP Relay
1
3
1
R-W
1
A
2
A
A33(A)
Junction
Connector
J26
Windshield Wiper SW Assembly
6
MPX1
MPX2
7
GR
GR
30
MPX+
MPX-
31
J58
A/C Amplifier
BR
BR
4
B
8
A
A29(A), J10(B)
Junction
Connector
BR
BR
(*9)
6
MPX2
MPX1
5
A27
Headlamp
Swivel ECU
7
JA3
BR-R
(*9)
BR
(*10)
21
Front Controller
HORN
Relay
2
1
27
11
6
2F
5
2F
2
2G
1
2G
1
2F
GR
L
B-R
B
W-B
1
1
B6
Horn (Low)
B10
Horn (High)
8
LL
2
LA
GR
5
6
A9
Junction
Connector
W-B
W-B
A2
GR
GR
GR
GR

* 9 : w/ Adaptive Front-Lighting System
*10 : w/o Adaptive Front-Lighting System