SFI SYSTEM

SF0GG-01

PRECAUTION

1. BEFORE WORKING ON FUEL SYSTEM, DISCONNECT NEGATIVE (-) TERMINAL CABLE FROM BATTERY.

HINT:
Any diagnostic trouble code retained by the computer will be erased when the negative (-) terminal cable is removed from the battery.
Therefore, if necessary, read the diagnosis before removing the terminal.

2. DO NOT SMOKE OR WORK NEAR AN OPEN FLAME WHEN WORKING ON FUEL SYSTEM.

3. KEEP GASOLINE AWAY FROM RUBBER OR LEATHER PARTS.

4. MAINTENANCE PRECAUTIONS

(a) In event of engine misfire, following precautions should be taken.
  (1) Check proper connection of battery terminals, etc.
  (2) After repair work, check that the ignition coil terminals and all other ignition system lines are reconnected securely.
  (3) When cleaning the engine compartment, be especially careful to protect the electrical system from water.

(b) Precautions when handling oxygen sensor.
  (1) Do not allow oxygen sensor to drop or hit against an object.
  (2) Do not allow the sensor to come into contact with water.

5. IF VEHICLE IS EQUIPPED WITH MOBILE RADIO SYSTEM (HAM, CB, ETC)

If the vehicle is equipped with a mobile communication system, refer to the precaution in the IN section.

6. AIR INDUCTION SYSTEM

(a) Separation of the engine oil dipstick, oil filler cap, PCV hose, etc. may cause the engine to run out of tune.

(b) Disconnection, looseness or cracks in the parts of the air induction system between the throttle body and cylinder head will allow air suction and cause the engine to run out of tune.

7. ELECTRONIC CONTROL SYSTEM

(a) Before removing SFI wiring connectors, terminals, etc., first disconnect the power by either turning the ignition switch OFF or disconnecting the negative (-) terminal cable from the battery.

HINT:
Always check the diagnostic trouble code before disconnecting the negative (-) terminal cable from the battery.

(b) When installing the battery, be especially careful not to incorrectly connect the positive (+) and negative (-) cables.

(c) Do not permit parts to receive a severe impact during removal or installation. Handle all SFI parts carefully, especially the ECM.

(d) Do not be careless during troubleshooting as there are numerous transistor circuits and even slight terminal contact can further troubles.

(e) Do not open the ECM cover.

(f) When inspecting during rainy weather, take care to prevent entry of water. Also, when washing the engine compartment, prevent water from getting on the SFI parts and wiring connectors.

(g) Parts should be replaced as an assembly.

(h) Care is required when pulling out and inserting wiring connectors.

(1) Release the lock and pull out the connector, pulling on the connectors.

(2) Fully insert the connector and check that it is locked.

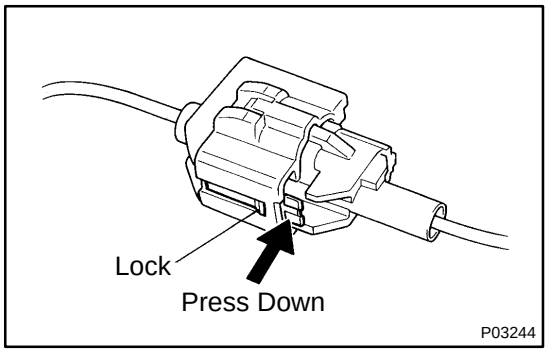

(i) When inspecting a connector with a volt/ohmmeter

(1) Carefully take out the water-proofing rubber if it is a water-proof type connector.

(2) Insert the test probe into the connector from the wiring side when checking the continuity, amperage or voltage.

(3) Do not apply unnecessary force to the terminal.

(4) After checking, install the water-proofing rubber on the connector securely.

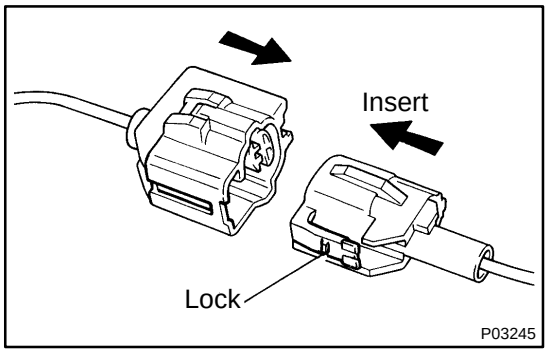

(j) Use SST for inspection or test of the injector or its wiring connector.

SST 09842-30060

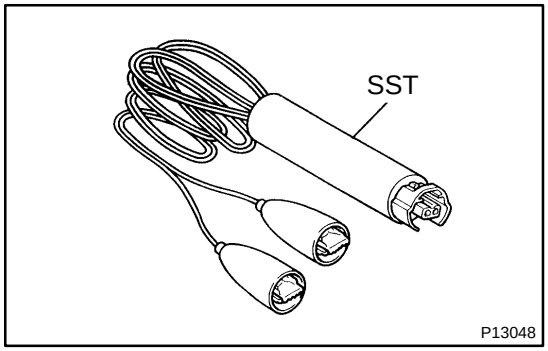

8. FUEL SYSTEM

(a) When disconnecting the high pressure fuel line, a large amount of gasoline will spill out, so observe the following procedures:

(1) Disconnect the fuel pump connector.

(2) Start the engine. After the engine has stopped on its own, turn off the ignition switch.

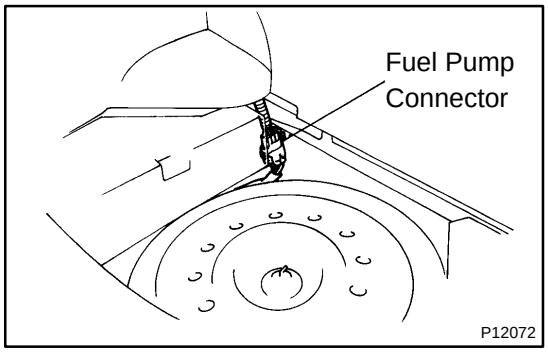

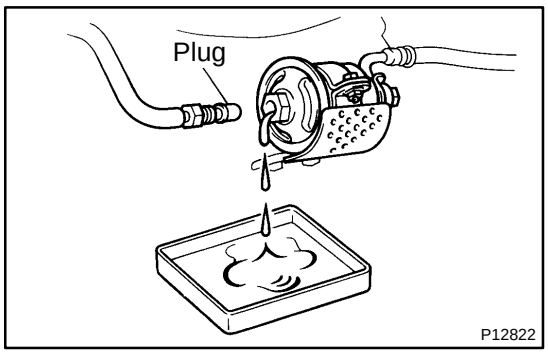

(3) Put a container under the connection.
(4) Slowly loosen the connection.
(5) Disconnect the connection.
(6) Plug the connection with a rubber plug.
(7) Reconnect the fuel pump connector.

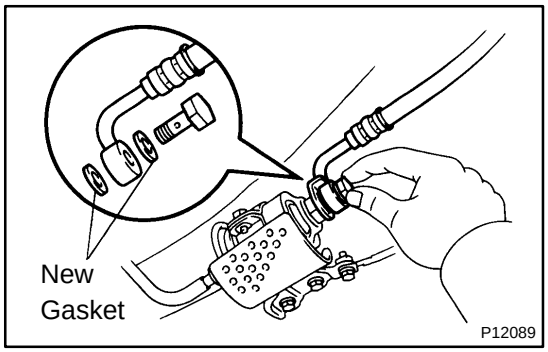

(b) When connecting the flare nut or union bolt on the high pressure pipe union, observe the following procedures:
(1) Union Bolt Type:
Always use a new gasket.
(2) Union Bolt Type:
Tighten the union bolt by hand.
(3) Union Bolt Type:
Tighten the union bolt to the specified torque.
Torque: 29 N·m (300 kgf·cm, 22 ft·lbf)

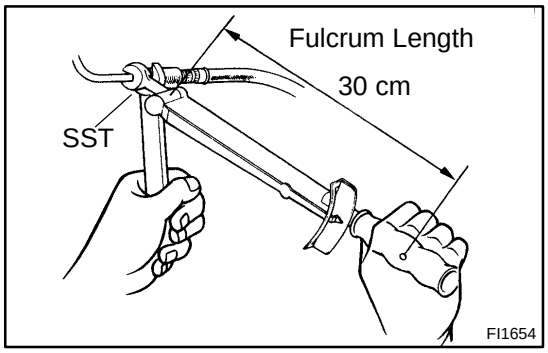

(4) Flare Nut Type:
Apply a light coat of engine oil to the flare nut and tighten the flare nut by hand.
(5) Flare Nut Type:
Using SST, tighten the flare nut to the specified torque.
SST 09631-22020
Torque: 30 N·m (310 kgf·cm, 22 ft·lbf)
HINT:
Use a torque wrench with a fulcrum length of 30 cm (11.81 in.).

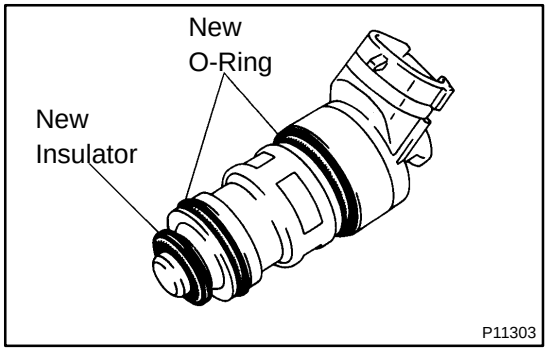

(c) Observe the following precautions when removing and installing the injectors.
(1) Never reuse the O-ring.
(2) When placing a new O-ring on the injector, take care not to damage it in any way.
(3) Coat a new O-ring with spindle oil or gasoline before installing-never use engine, gear or brake oil.

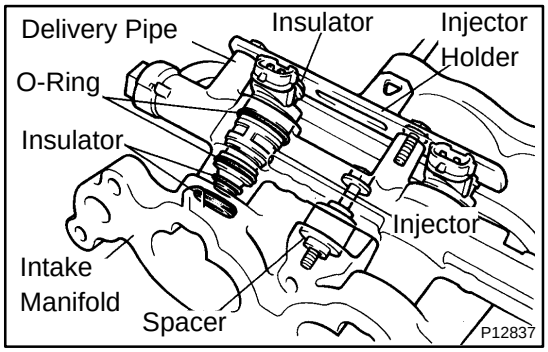

(d) Install the injector to the delivery pipe and intake manifold as shown in the illustration.

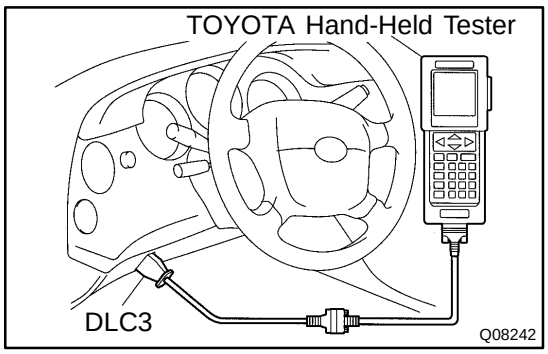

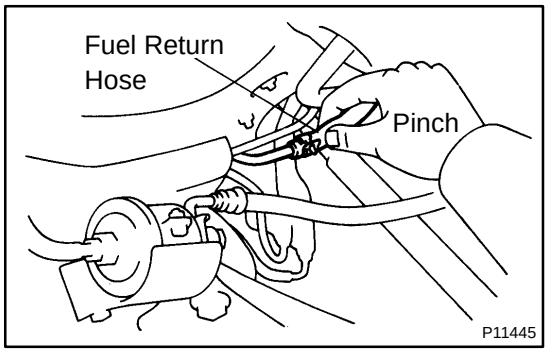

(e) Check that there are no fuel leaks after doing maintenance anywhere on the fuel system.

(1) Connect the TOYOTA hand-held tester to the DLC3.

(2) Turn the ignition switch ON and TOYOTA hand-held tester main switch ON.

NOTICE:

Do not start the engine.

(3) Select the active test mode on the TOYOTA hand-held tester.

(4) Please refer to the TOYOTA hand-held tester operator's manual for further details.

(5) If you have no TOYOTA hand-held tester, connect the positive (+) and negative (-) leads from the battery to the fuel pump connector.
(See page SF-5)

(6) Pinch the fuel return hose.
The pressure in the high pressure line will rise to approx. 392 kPa (4 kgf/cm^2, 57 psi). In this state, check to see that there are no leaks from any part of the fuel system.

NOTICE:

- **Always pinch the hose.**
- **Avoid bending as it may cause the hose to crack.**

(7) Turn the ignition switch to LOCK.

(8) Disconnect the TOYOTA hand-held tester from the DLC3.

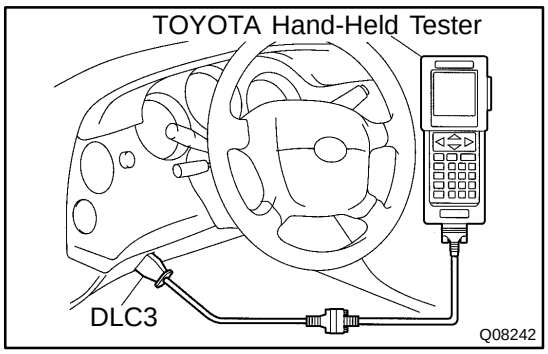

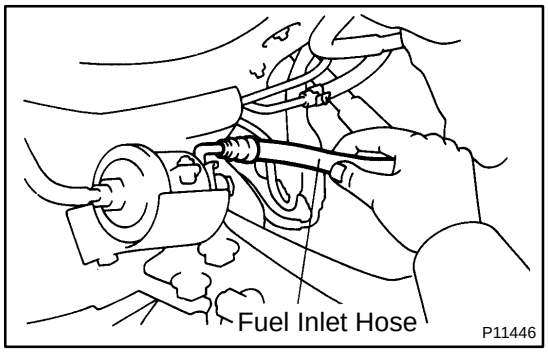

FUEL PUMP

SF0GH-01

ON-VEHICLE INSPECTION

1. CHECK FUEL PUMP OPERATION

(a) Connect the TOYOTA hand-held tester to the DLC3.

(b) Turn the ignition switch ON and TOYOTA hand-held tester main switch ON.

NOTICE:

Do not start the engine.

(c) Select the ACTIVE TEST mode on the TOYOTA hand-held tester.

(d) Please refer to the TOYOTA hand-held tester operator's manual for further details.

(e) If you have no TOYOTA hand-held tester, connect the positive (+) and negative (-) leads from the battery to the fuel pump connector.
(See step 8)

(f) Check that there is pressure in the fuel inlet hose from the fuel filter.

HINT:

If there is fuel pressure, you will hear the sound of fuel flowing. If there is no pressure, check the following parts:

- Fuses
- EFI No.2 relay
- Fuel pump
- ECM
- Wiring connections

(g) Turn the ignition switch to LOCK.

(h) Disconnect the TOYOTA hand- held tester from the DLC3.

2. CHECK FUEL PRESSURE

(a) Check the battery voltage is above 12 V.

(b) Disconnect the negative (-) terminal cable from the battery.

(c) Remove the union bolt and 2 gaskets, disconnect the fuel inlet hose from the fuel filter.

CAUTION:

- **Put a suitable container or shop towel under the fuel filter.**
- **Slowly loosen the union bolt.**

(d) Install the fuel inlet hose and SST (pressure gauge) to the fuel filter with the 3 gaskets and SST (union bolt).
SST 09268-45012
Torque: 29 N·m (300 kgf·cm, 22 ft·lbf)

(e) Wipe off any splattered gasoline.

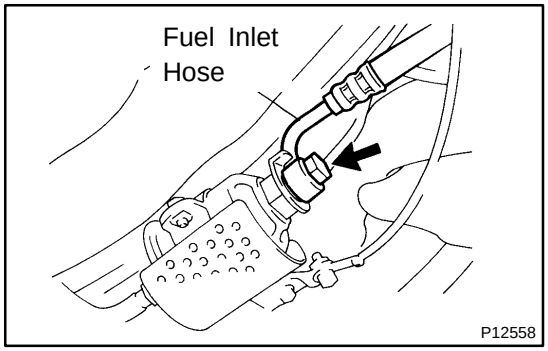

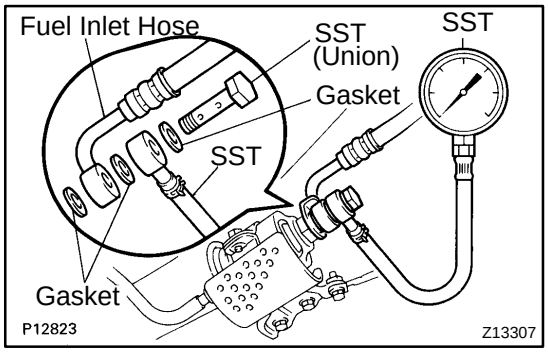

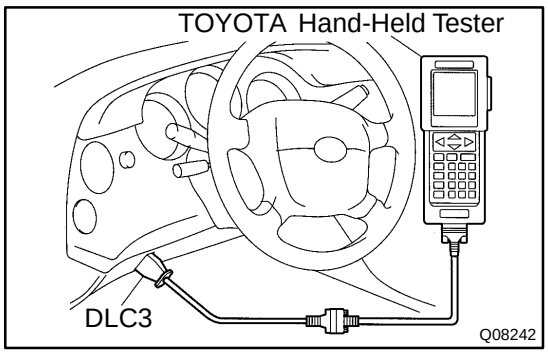

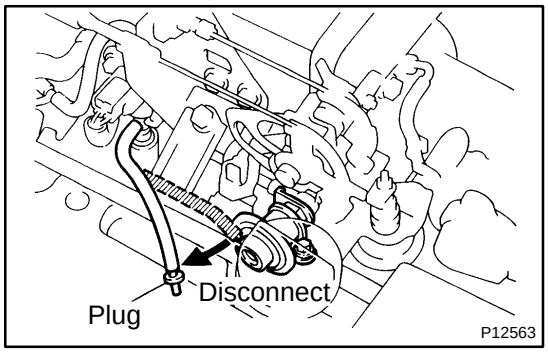

(f) Connect the TOYOTA hand-held tester to the DLC3. (See step 1 in check fuel pump operation (a) to (e).)
(g) Reconnect the negative (-) terminal cable to the battery.
(h) Turn the ignition switch ON.
(i) Measure the fuel pressure.
Fuel pressure:
226 - 275 kPa (2.3 - 2.8 kgf/cm^2, 33 - 40 psi)

If pressure is high, replace the fuel pressure regulator.
If pressure is low, check the following parts:
(1) Fuel hoses and connections
(2) Fuel pump
(3) Fuel filter
(4) Fuel pressure regulator

(j) Remove the TOYOTA hand-held tester from the DLC3.
(k) Start the engine.
(l) Disconnect the vacuum sensing hose from the fuel pressure regulator, and plug the hose end.
(m) Measure the fuel pressure at idle.
Fuel pressure:
226 - 275 kPa (2.3 - 2.8 kgf/cm^2, 33 - 40 psi)
(n) Reconnect the vacuum sensing hose to the fuel pressure regulator.
(o) Measure the fuel pressure at idle.
Fuel pressure:
167 - 216 kPa (1.7 - 2.2 kgf/cm^2, 24 - 31 psi)

If pressure is not as specified, check the vacuum sensing hose and fuel pressure regulator.
(p) Stop the engine.
(q) Check that the fuel pressure remains as specified for 5 minutes after the engine has stopped.
Fuel pressure:
147 kPa (1.5 kgf/cm^2, 21 psi) or more

If pressure is not as specified, check the fuel pump, pressure regulator and/or injectors.
(r) After checking fuel pressure, disconnect the negative (-) terminal cable from the battery and carefully remove the SST to prevent gasoline from splashing.
SST 09268-45012
(s) Reinstall the fuel inlet hose to the fuel filter with 2 new gaskets and the union bolt.
Torque: 29 N·m (300 kgf·cm, 22 ft·lbf)
(t) Reconnect the negative (-) terminal cable to the battery.
(u) Check for fuel leaks.

3. TAKE OUT FLOOR CARPET
4. REMOVE SPARE WHEEL COVER
5. REMOVE SPARE WHEEL
6. REMOVE SERVICE HOLE COVER
7. DISCONNECT FUEL PUMP & SENDER GAUGE CONNECTOR

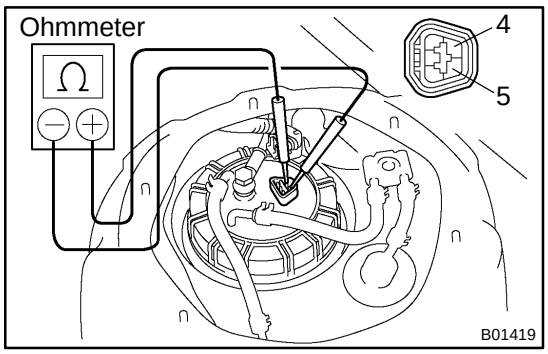

8. INSPECT FUEL PUMP RESISTANCE

Using an ohmmeter, measure the resistance between terminals 4 and 5.

Resistance: 0.1 - 3.0 Ω at 20˚C (68˚F)

If the resistance is not as specified, replace the fuel pump, lead wire or fuel pump bracket.

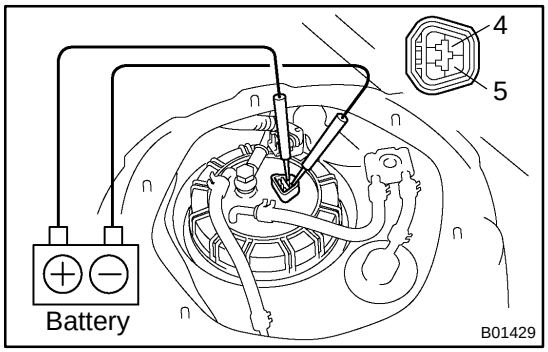

9. INSPECT FUEL PUMP OPERATION

Connect a tester lead from terminal 4 of the connector to the positive (+) terminal of the battery; connect another tester lead from terminal 5 of the connector to the negative (-) terminal of the battery.

NOTICE:

- **These tests must be performed quickly (within 10 seconds) to prevent the coil from burning out.**
- **Keep the fuel pump as far away from the battery as possible.**
- **Always connect or disconnect at the battery.**

If operation is not as specified, replace the fuel pump, lead wire or fuel pump bracket.

10. RECONNECT FUEL PUMP & SENDER GAUGE CONNECTOR

11. INSTALL SERVICE HOLE COVER

12. INSTALL SPARE WHEEL

13. INSTALL SPARE WHEEL COVER

14. INSTALL FLOOR CARPET

SF0GI-01

COMPONENTS

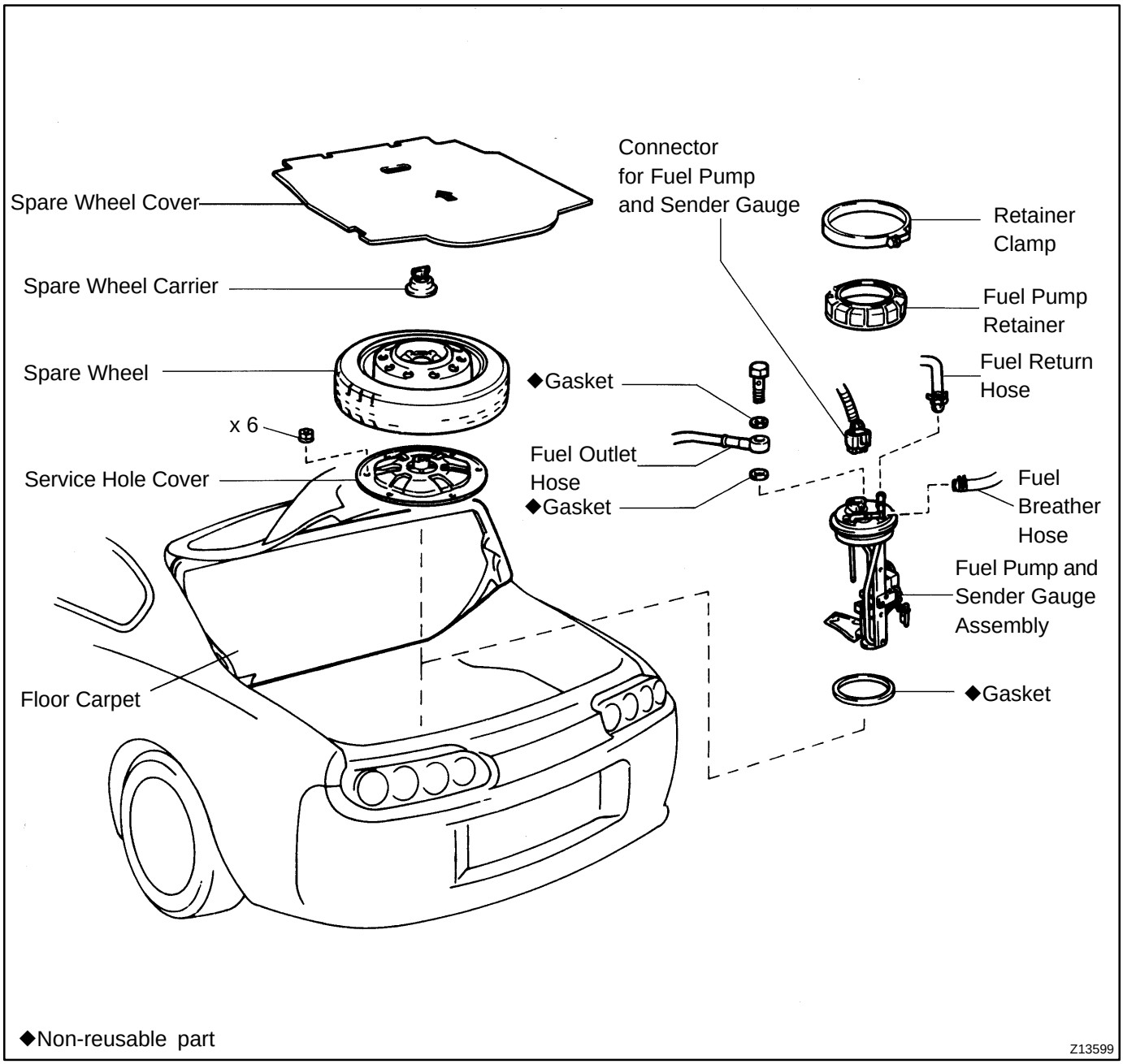

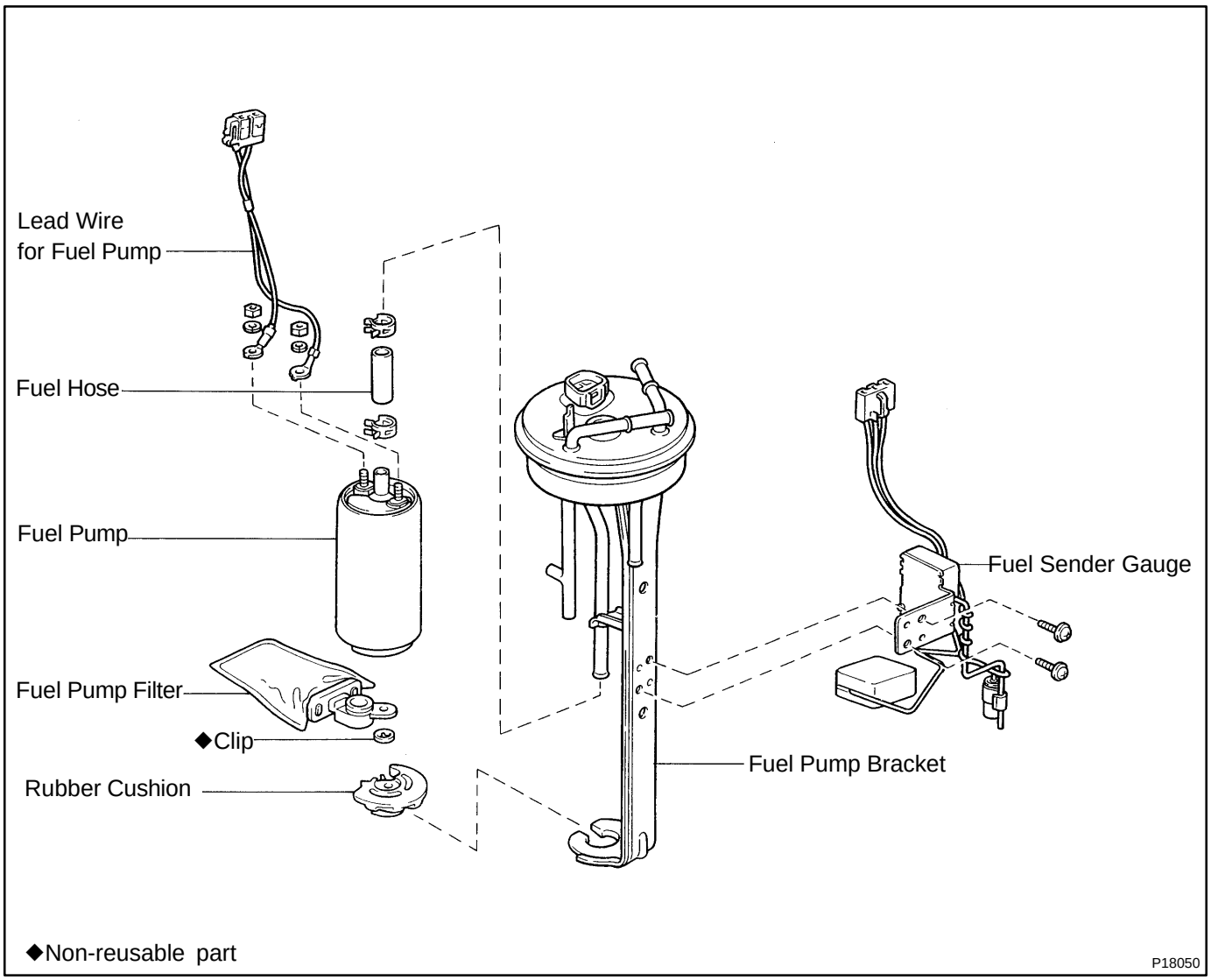
Lead Wire
for Fuel Pump
Fuel Hose
Fuel Pump
Fuel Pump Filter
◆Clip
Rubber Cushion
Fuel Sender Gauge
Fuel Pump Bracket
◆Non-reusable part
P18050

SF19Z-01

REMOVAL

CAUTION:

Do not smoke or work near an open flame when working on the fuel pump.

1. TAKE OUT FLOOR CARPET

2. REMOVE SPARE WHEEL COVER

3. REMOVE SPARE WHEEL

4. REMOVE SERVICE HOLE COVER

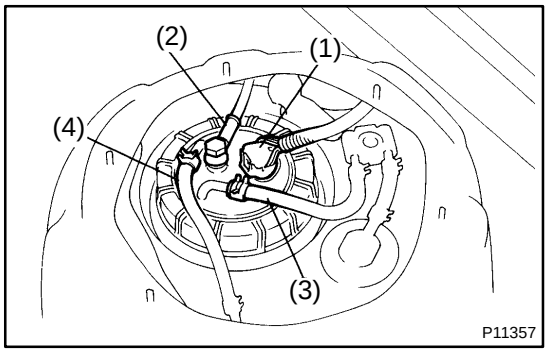

5. REMOVE FUEL PUMP AND SENDER GAUGE ASSEMBLY

(a) Disconnect the connector and hoses from the fuel pump bracket:

(1) Fuel pump connector

(2) Fuel outlet hose

Remove the union bolt and 2 gaskets, and disconnect the outlet hose.

(3) Fuel return hose

(4) Fuel breather hose

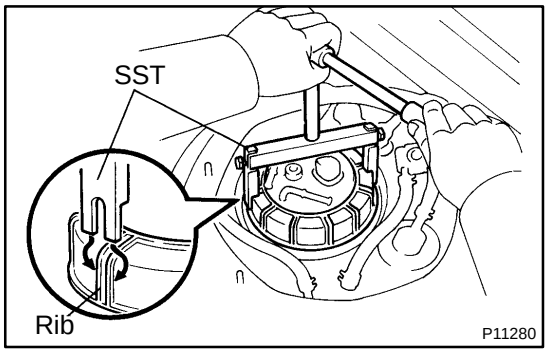

(b) Remove the retainer clamp.

(c) Using SST, loosen the retainer.

SST 09808-14010

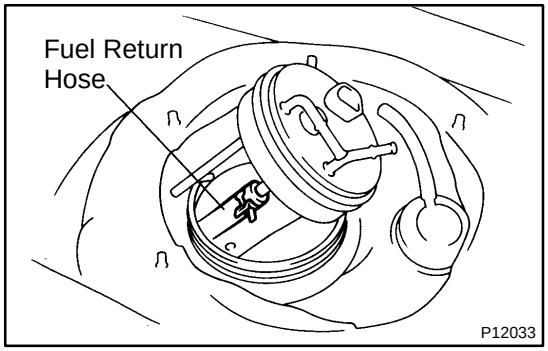

(d) Remove the retainer, and disconnect the fuel pump and sender gauge assembly from the fuel tank.

(e) Disconnect the fuel return hose from the return port of the fuel pump bracket.

(f) Remove the fuel pump, sender gauge assembly and gasket.

SF0GK-01

DISASSEMBLY

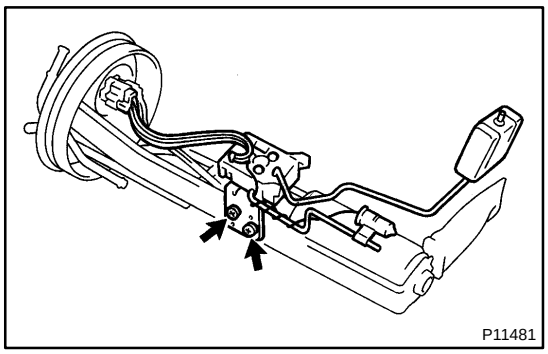

1. REMOVE FUEL SENDER GAUGE FROM FUEL PUMP BRACKET

(a) Disconnect the connector from the fuel pump bracket.

(b) Remove the 2 screws and sender gauge.

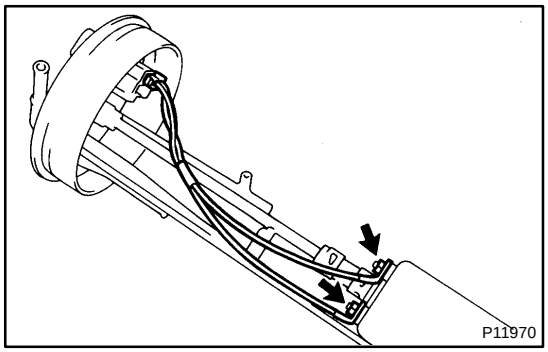

2. REMOVE FUEL PUMP FROM PUMP BRACKET

(a) Remove the lead wire.

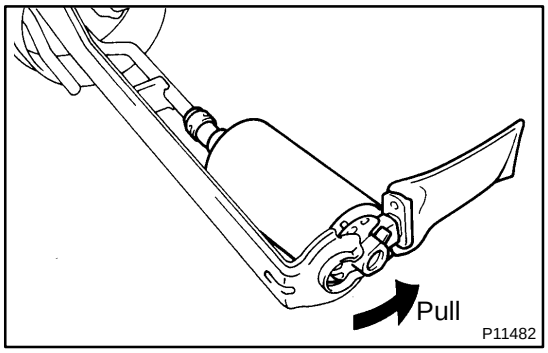

(b) Pull out the lower side of the fuel pump from the pump bracket.

(c) Remove the rubber cushion from the fuel pump.

(d) Disconnect the fuel hose from the fuel pump, and remove the fuel pump.

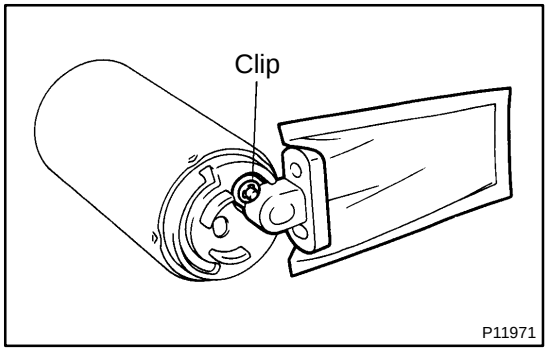

3. REMOVE FUEL PUMP FILTER FROM FUEL PUMP

(a) Using a small screwdriver, remove the clip.

HINT:

At the time of installation,please refer to the following items.

Use a new clip.

(b) Pull out the pump filter.

SF0GM-01

INSTALLATION

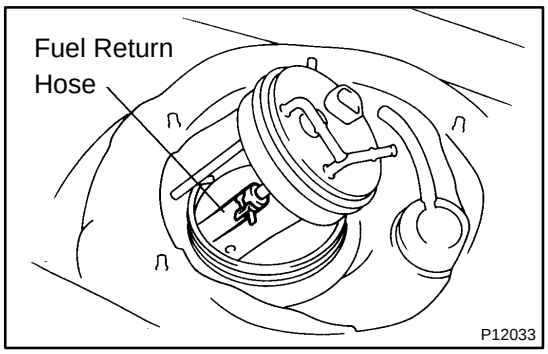

1. INSTALL FUEL PUMP AND SENDER GAUGE ASSEMBLY

(a) Install a new gasket to the fuel tank.

(b) Insert fuel pump and sender gauge assembly into the fuel tank.

(c) Connect the fuel return hose to the return port of the fuel pump bracket.

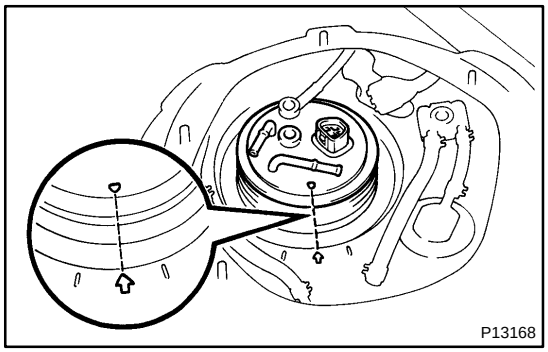

(d) Align the arrow marks of the fuel pump bracket and fuel tank.

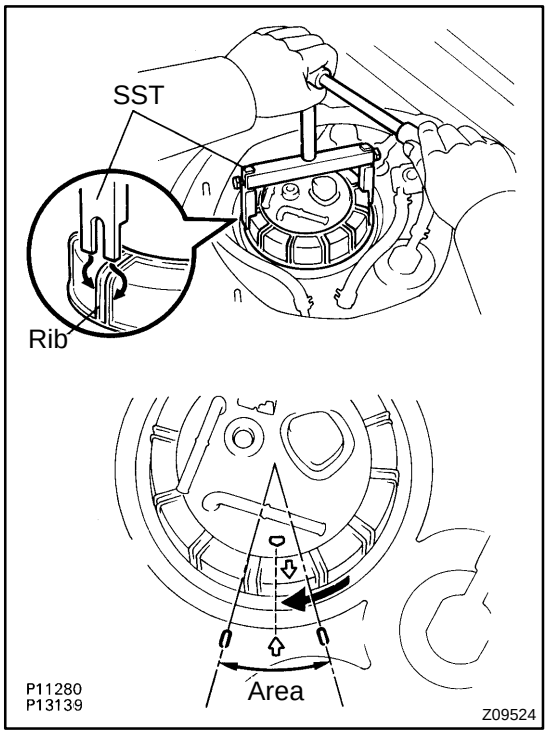

(e) Temporarily install the retainer.

(f) Using SST, tighten the retainer until the arrow mark on the retainer is within the lines on the fuel tank.
SST 09808-14010

(g) Check that the arrow marks of the fuel pump bracket and fuel tank are aligned.

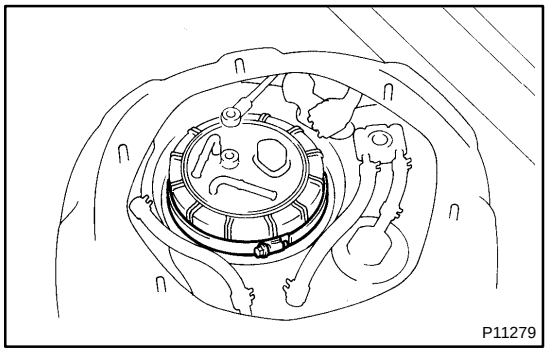

(h) Install the retainer clamp.

(i) Connect the connector and hoses to the fuel pump bracket:

- Fuel pump connector
- Fuel outlet hose
  Connect the outlet hose with 2 new gaskets and the union bolt.

Torque: 29 N·m (300 kgf·cm, 22 ft·lbf)

- Fuel return hose
- Fuel breather hose

2. **INSTALL SERVICE HOLE COVER**
3. **INSTALL SPARE WHEEL**
4. **INSTALL SPARE WHEEL COVER**
5. **INSTALL FLOOR CARPET**
6. **CHECK FOR FUEL LEAKS**

FUEL PRESSURE REGULATOR

COMPONENTS

SF0GN-01

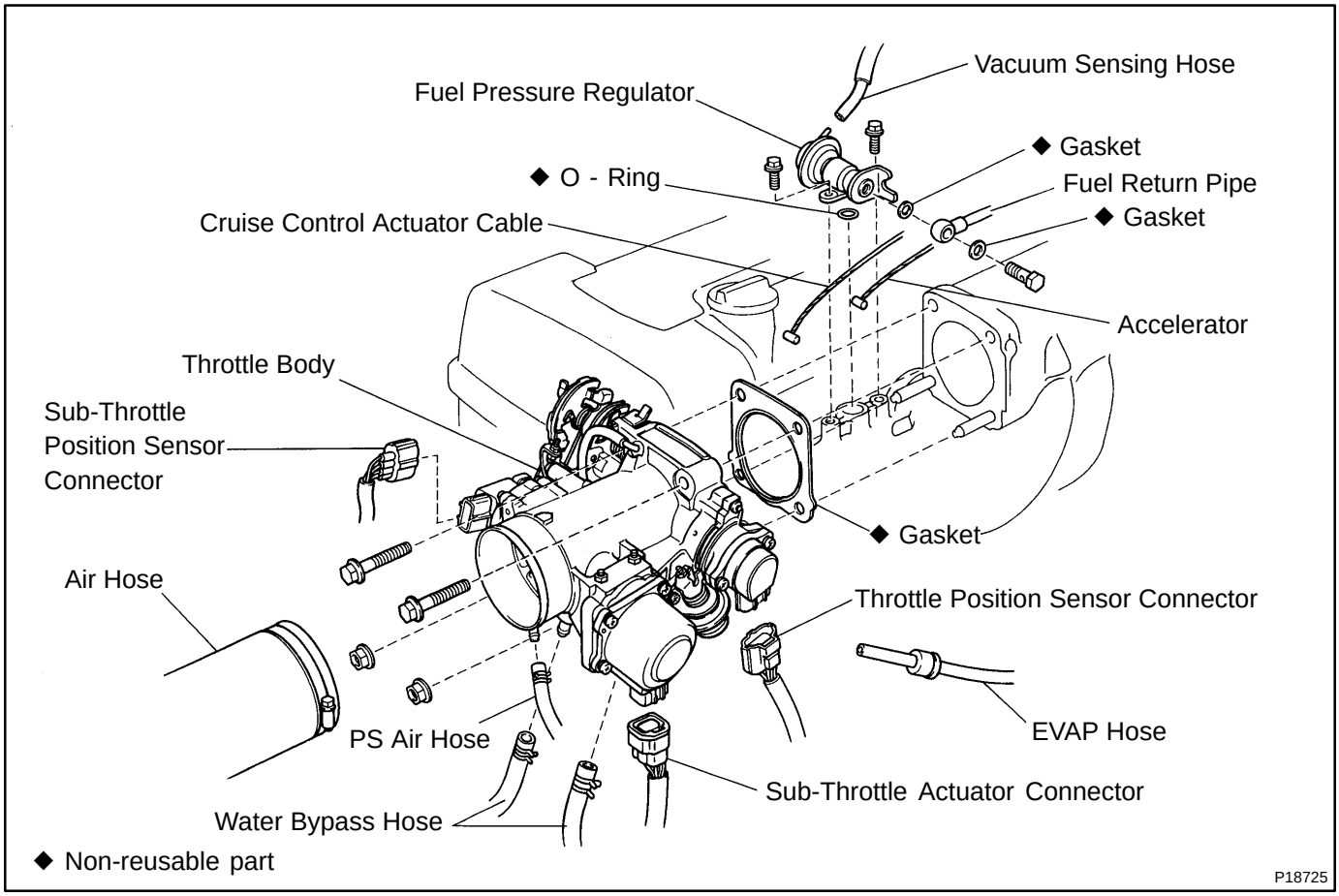

SF0GO-01

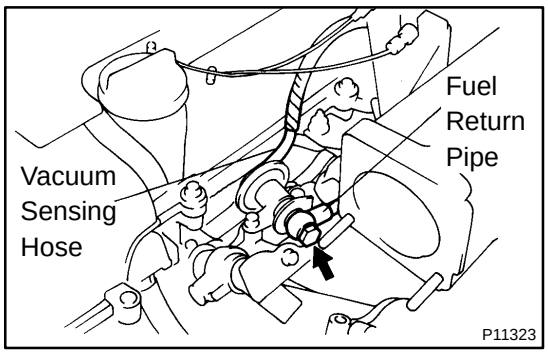

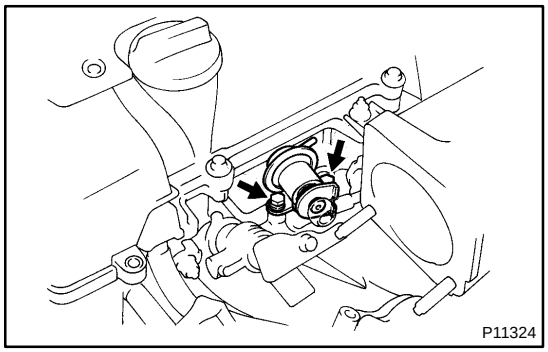

REMOVAL

1. REMOVE THROTTLE BODY
(See page SF-43)

2. DISCONNECT VACUUM SENSING HOSE FROM FUEL PRESSURE REGULATOR

3. DISCONNECT FUEL RETURN PIPE FROM FUEL PRESSURE REGULATOR

Remove the union bolt and 2 gaskets, and disconnect the return pipe from the pressure regulator.

CAUTION:

- **Put a shop rag under the pressure regulator.**
- **Slowly loosen the union bolt.**

4. REMOVE FUEL PRESSURE REGULATOR

(a) Remove the 2 bolts, and pull out the pressure regulator.

(b) Remove the O-ring from the pressure regulator.

SF0GP-01

INSTALLATION

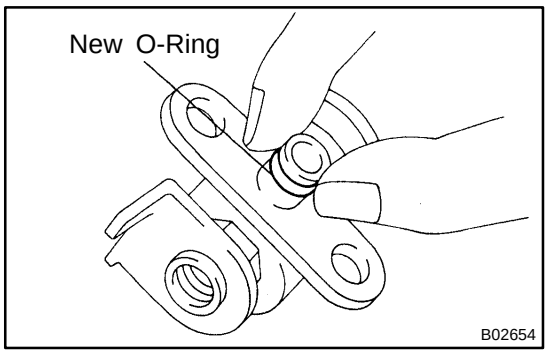

1. INSTALL FUEL PRESSURE REGULATOR

(a) Apply a light coat of gasoline to a new O-ring, and install it to the pressure regulator.

(b) Attach the pressure regulator to the delivery pipe.

(c) Check that the pressure regulator rotates smoothly.

NOTICE:

If it does not rotate smoothly, the O-ring may be pinched, so remove the pressure regulator and do steps (b) and (c) above again.

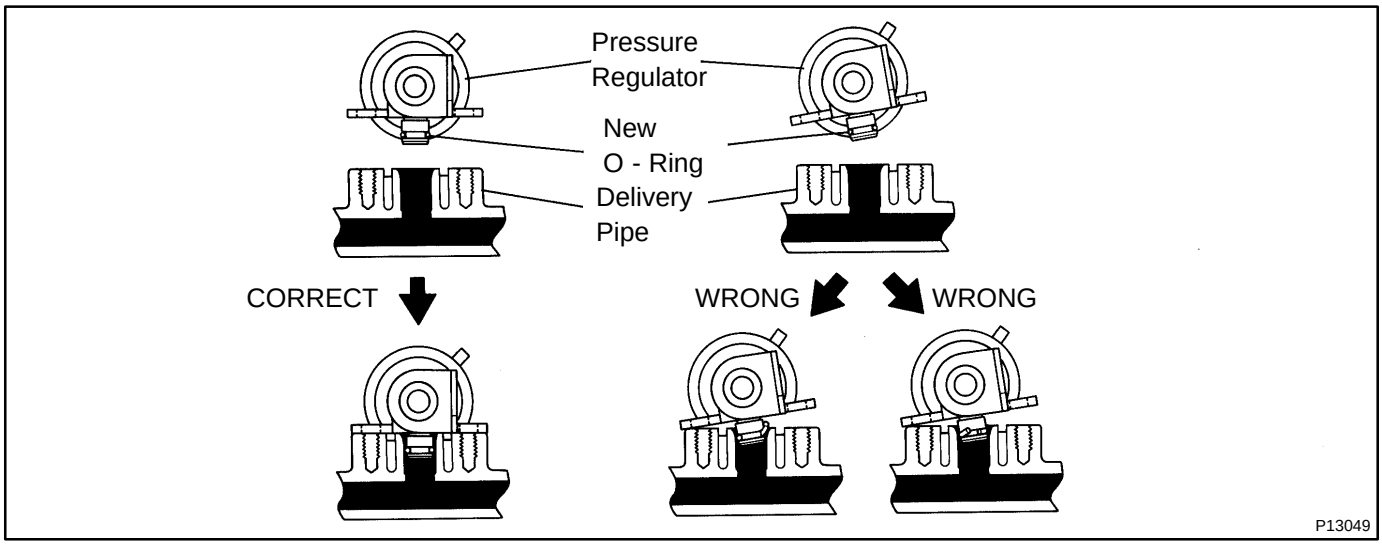

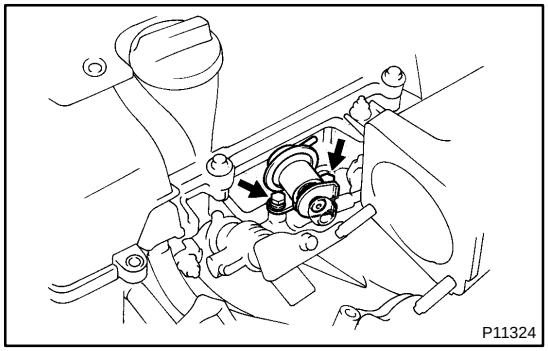

(d) Install the pressure regulator with the 2 bolts.
Torque: 9.0 N·m (90 kgf·cm, 80 in.·lbf)

2. CONNECT FUEL RETURN PIPE TO FUEL PRESSURE REGULATOR

Install the return pipe with 2 new gaskets and the union bolt.
Torque: 28 N·m (280 kgf·cm, 21 ft·lbf)

3. CONNECT VACUUM SENSING HOSE TO FUEL PRESSURE REGULATOR

4. INSTALL THROTTLE BODY
(See page SF-48)

5. CHECK FOR FUEL LEAKS
(See page SF-1)

INJECTOR

SF0GQ-01

ON-VEHICLE INSPECTION

1. INSPECT INJECTOR OPERATION

Check operation sound from each injector.

(1) With the engine running or cranking, use a sound scope to check that there is normal operating noise in proportion to engine speed.

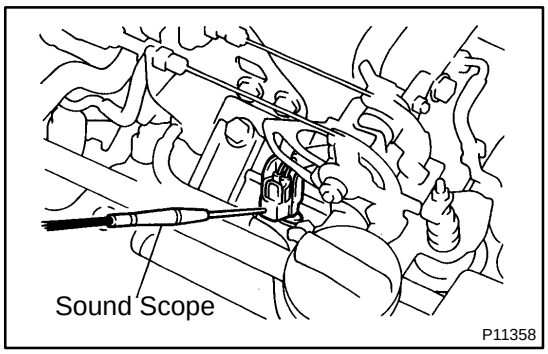

(2) If you have no sound scope, you can check the injector transmission operation with your finger.

If no sound is heard or unusual vibration is felt, check the wiring connector, injector or injection signal from the ECM.

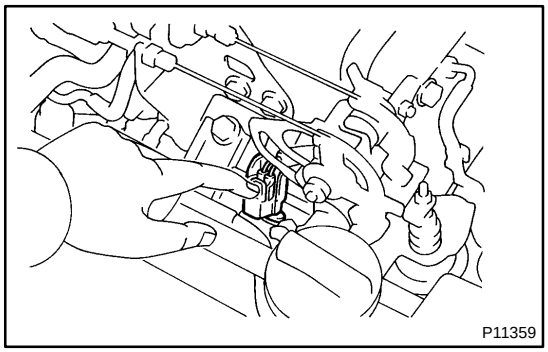

2. INSPECT INJECTOR RESISTANCE

(a) Disconnect the throttle body without disconnecting the water bypass hoses from the air intake chamber. (See page SF-42)

(b) Disconnect the 6 injector connectors.

(c) Using an ohmmeter, measure the resistance between the injector terminals.

Resistance: Approx. 1.95 Ω at 20˚C (68˚F)

If the resistance is not as specified, replace the injector.

(d) Reconnect the 6 injector connectors.

(e) Reinstall the throttle body to the air intake chamber. (See page SF-48)

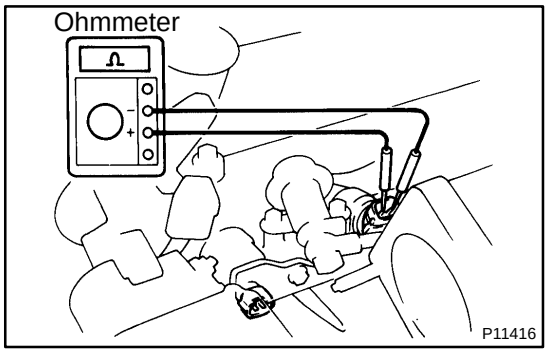

SF0GR-01

COMPONENTS

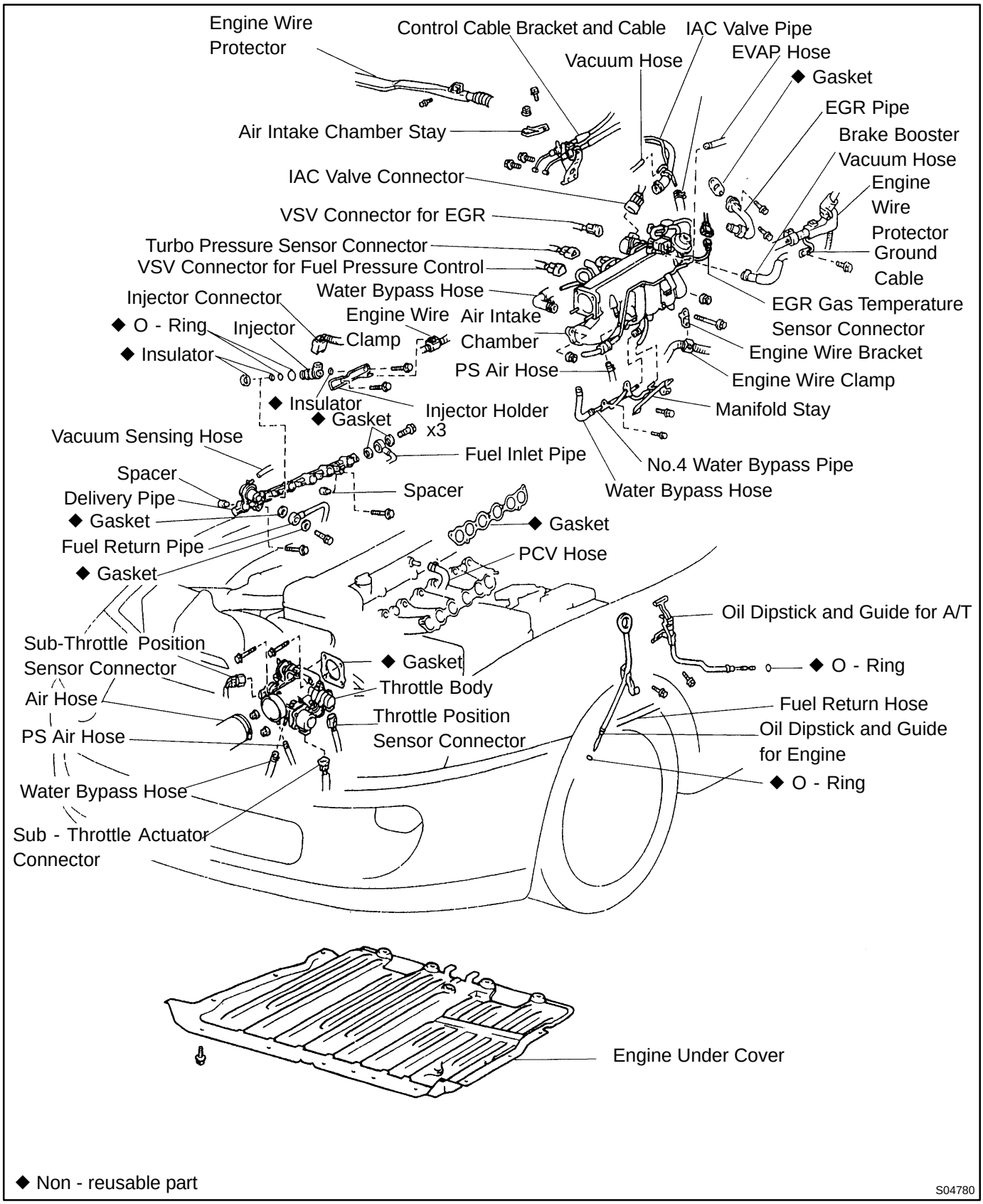

SF0GS-02

REMOVAL

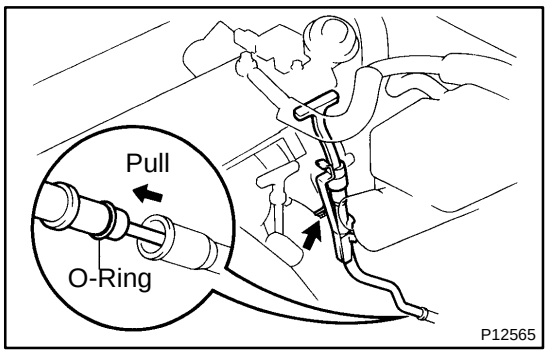

1. REMOVE ENGINE UNDER COVER

2. REMOVE THROTTLE BODY
(See page SF-43)

3. REMOVE OIL DIPSTICK AND GUIDE FOR A/T

(a) Remove the bolt.

(b) Pull out the dipstick guide together with the dipstick.

HINT:
At the time of installation, please refer to the following items.
Apply clean transmission oil to the O-ring, and push in the dipstick guide.

(c) Remove the O-ring from the dipstick guide.

HINT:
At the time of installation, please refer to the following items.
Use a new O-ring.

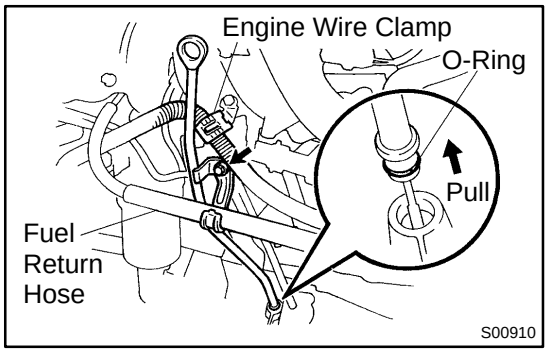

4. REMOVE OIL DIPSTICK AND GUIDE FOR ENGINE

(a) Disconnect the fuel return hose from the clamp of the dipstick guide.

(b) Remove the bolt.

(c) Pull out the dipstick guide together with the dipstick.

HINT:
At the time of installation, please refer to the following items.
Apply clean engine oil to the O-ring, and push in the dipstick guide.

(d) Remove the O-ring from the dipstick guide.

HINT:
At the time of installation, please refer to the following items.
Use a new O-ring.

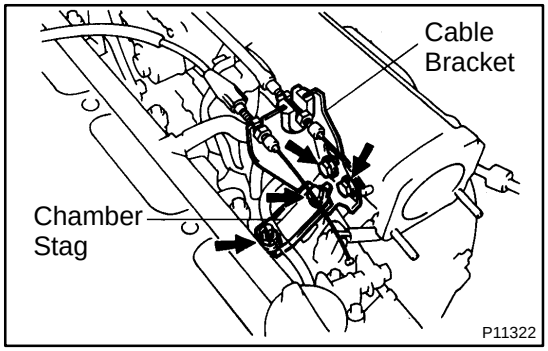

5. REMOVE AIR INTAKE CHAMBER STAY

Remove the bolt, nut and chamber stay.

Torque: 19 N·m (195 kgf·cm, 14 ft·lbf)

6. DISCONNECT CONTROL CABLE BRACKET FROM AIR INTAKE CHAMBER

Remove the 2 bolts, and disconnect the cable bracket from the air intake chamber.

Torque: 19 N·m (195 kgf·cm, 14 ft·lbf)

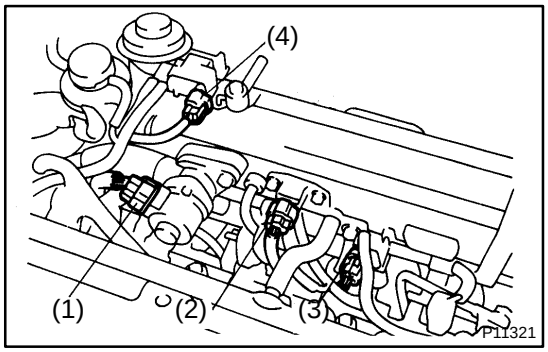

7. DISCONNECT CONNECTORS AND HOSES

(a) Disconnect these connectors:
- (1) IAC valve connector
- (2) Turbo pressure sensor connector
- (3) VSV connector for fuel pressure control
- (4) VSV connector for EGR

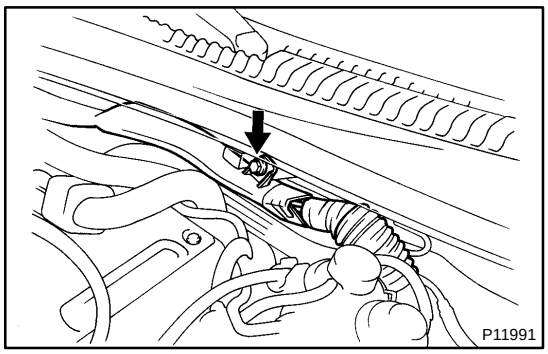

(b) Remove the bolt, and disconnect the engine wire protector from the body.

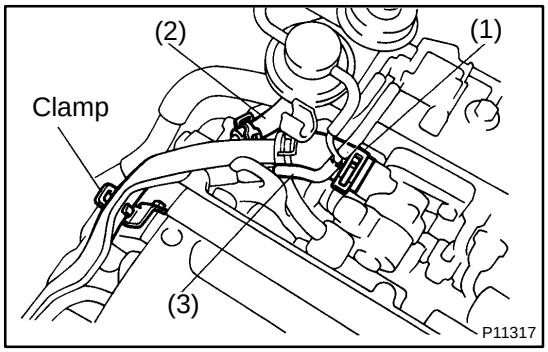

(c) Disconnect these hoses:
(1) Air hose from IAC valve
Disconnect the IAC valve pipe from the clamp on the cylinder head cover, and disconnect the air hose from the IAC valve.
(2) Air hose (from air intake chamber) from vacuum pipe on IAC valve pipe
(3) Air hose for EGR from valve pipe

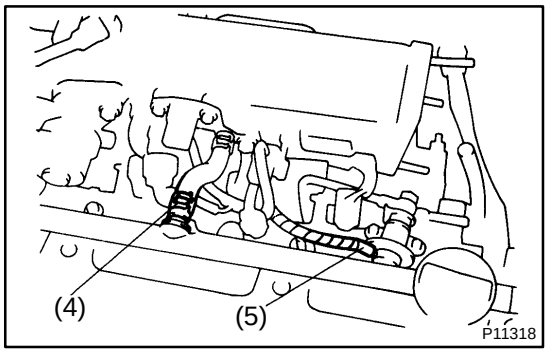

(4) PCV hose from PCV valve
(5) Vacuum sensing hose from fuel pressure regulator

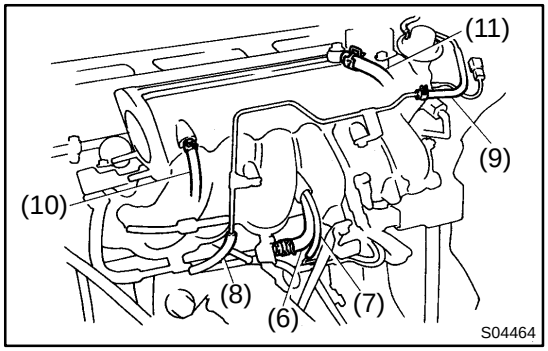

(6) Water bypass hose (from IAC valve) from No.4 water bypass pipe
(7) EVAP hose (from air intake chamber) from vacuum pipe on manifold stay
(8) EVAP hose (from vacuum pipe on No.4 water bypass pipe) from No.2 vacuum pipe
(9) EVAP hose (from charcoal canister) from No.2 vacuum pipe
(10) PS air hose from air intake chamber
(11) Brake booster vacuum hose from union on air intake chamber

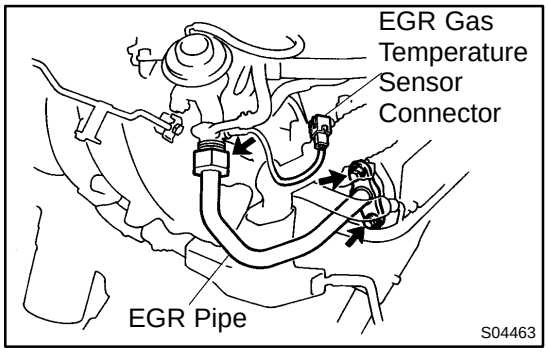

8. DISCONNECT EGR GAS TEMPERATURE SENSOR CONNECTOR

(a) Disconnect the connector from the No.2 vacuum pipe.
(b) Disconnect the sensor connector from the wiring connector.

9. REMOVE EGR PIPE

(a) Remove the union bolt holding the EGR pipe to the EGR valve.
Torque: 64 N·m (650 kgf·cm, 47 ft·lbf)

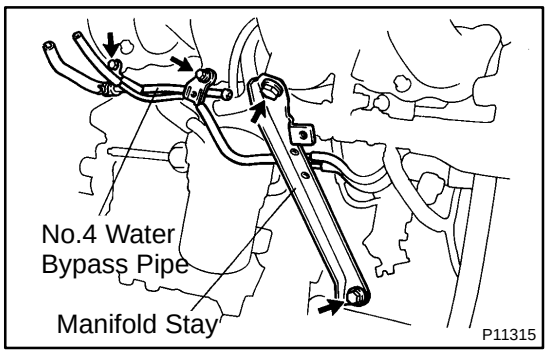

(b) Remove the 2 bolts, EGR pipe and gasket.

HINT:

At the time of installation, please refer to the following items.

Use a new gasket.

Torque: 27 N·m (280 kgf·cm, 20 ft·lbf)

10. REMOVE NO.4 WATER BYPASS PIPE

Remove the 2 bolts and water bypass pipe.

11. REMOVE MANIFOLD STAY

Remove the 2 bolts and manifold stay.

Torque: 39 N·m (400 kgf·cm, 29 ft·lbf)

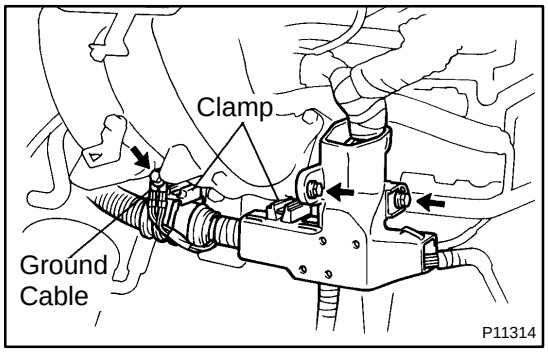

12. REMOVE AIR INTAKE CHAMBER ASSEMBLY

(a) Remove the bolt, and disconnect the ground cable from the intake manifold.

(b) Remove the 2 bolts holding the engine wire protector to the intake manifold.

(c) Disconnect the 2 clamps of the engine wire protector from the brackets.

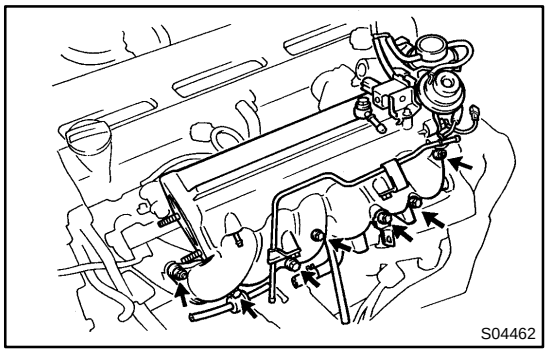

(d) Remove the 5 bolts, 2 nuts and engine wire bracket, and disconnect the air intake chamber assembly from the intake manifold.

HINT:

At the time of installation, please refer to the following items.

Uniformly tighten the bolts and nuts in several passes.

Torque: 27 N·m (280 kgf·cm, 20 ft·lbf)

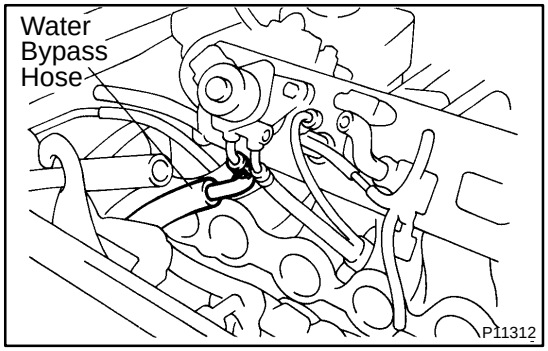

(e) Disconnect the water bypass hose from the IAC valve.

(f) Remove the gasket.

HINT:

At the time of installation, please refer to the following items.

Use a new gasket.

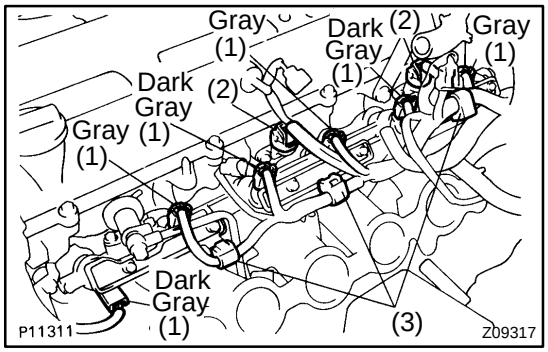

13. DISCONNECT WIRE CLAMPS AND CONNECTORS

Disconnect these connectors and clamps:

(1) 6 injectors connectors

HINT:

At the time of installation, please refer to the following items.

The No.1, No.3 and No.5 injector connectors are dark gray, and the No.2, No.4 and No.6 injector connectors are gray.

(2) 2 camshaft position sensor connectors

(3) 3 engine wire clamps from injector holders

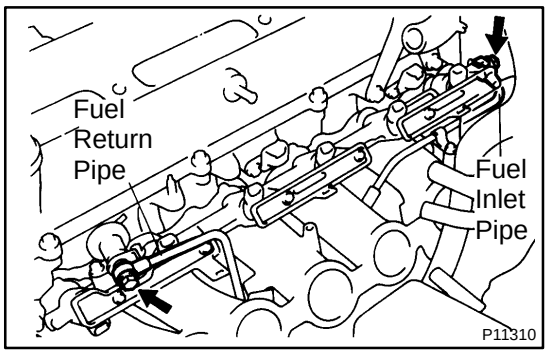

14. DISCONNECT FUEL INLET PIPE FROM DELIVERY PIPE

Remove the union bolt and 2 gaskets, and disconnect the inlet pipe from the delivery pipe.

HINT:

At the time of installation, please refer to the following items.

Use 2 new gaskets.

Torque: 41 N·m (420 kgf·cm, 30 ft·lbf)

CAUTION:

- **Put a shop towel under the delivery pipe.**
- **Slowly loosen the union bolt.**

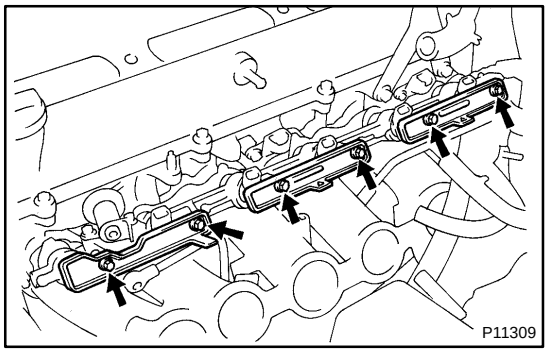

15. DISCONNECT FUEL RETURN PIPE FROM FUEL PRESSURE REGULATOR

(See page SF-16)

16. REMOVE DELIVERY PIPE AND INJECTORS

(a) Remove the 6 bolts and 3 injector holders.

Torque: 7.8 N·m (80 kgf·cm, 69 in.·lbf)

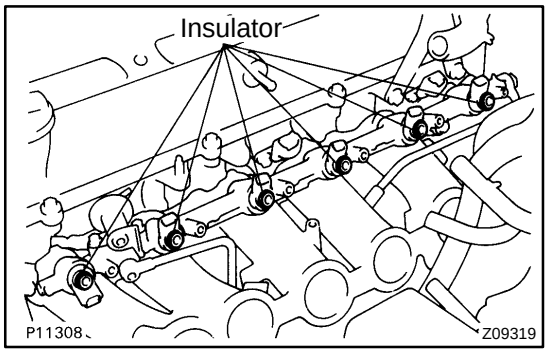

(b) Remove the 6 insulators from the injectors.

HINT:

At the time of installation, please refer to the following items.

Use 6 new insulators.

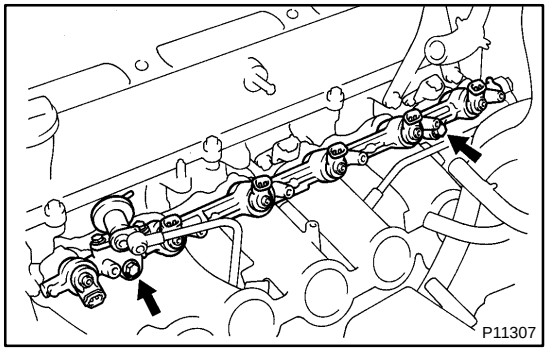

(c) Remove the 2 bolts, the delivery pipe and 6 injectors assembly.

Torque: 21 N·m (210 kgf·cm, 15 ft·lbf)

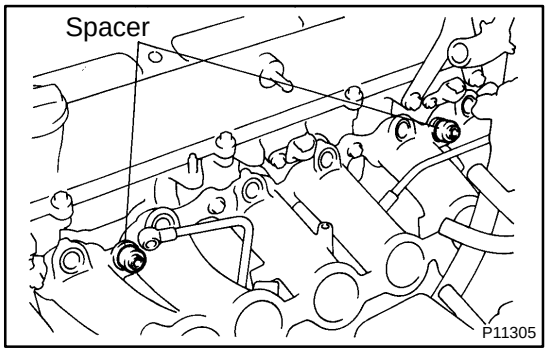

(d) Remove the 2 spacers from the intake manifold.

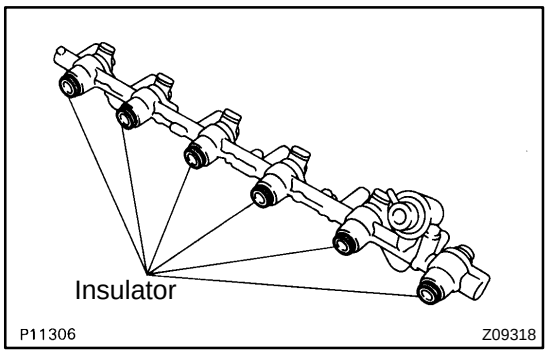

(e) Remove the 6 insulators from the delivery pipe.

HINT:

At the time of installation, please refer to the following items.

Use 6 new insulators.

SF0GT-02

INSPECTION

1. INSPECT INJECTOR INJECTION

CAUTION:

Keep injector clear of sparks during the test.

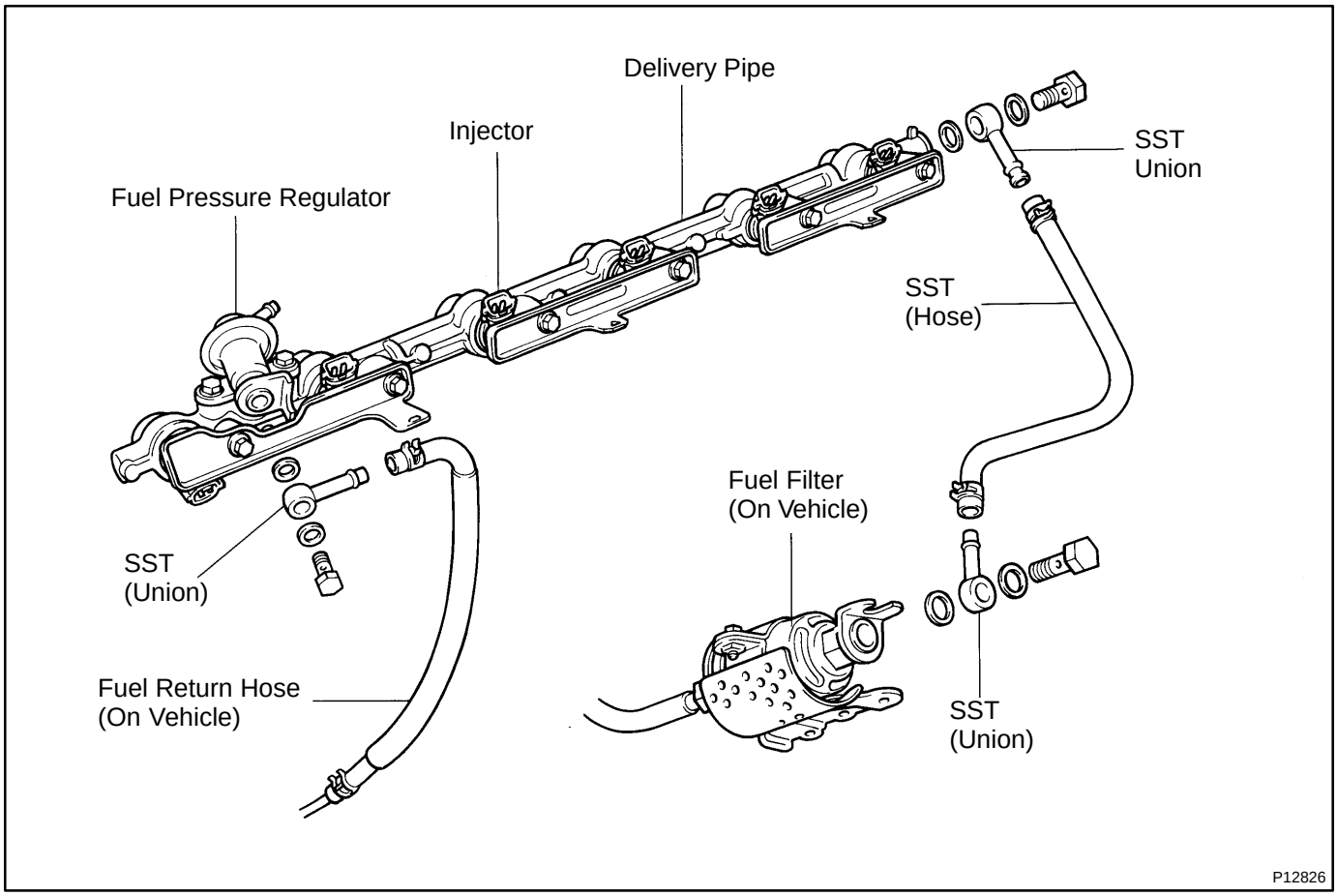

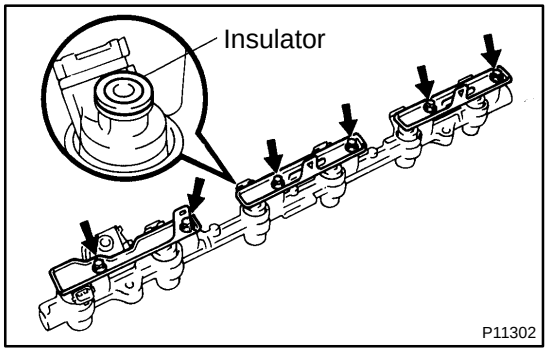

(a) Install the insulator to each injector.

(b) Install the 3 injector holders with the 6 bolts.
Torque: 7.8 N·m (80 kgf·cm, 69 in.·lbf)

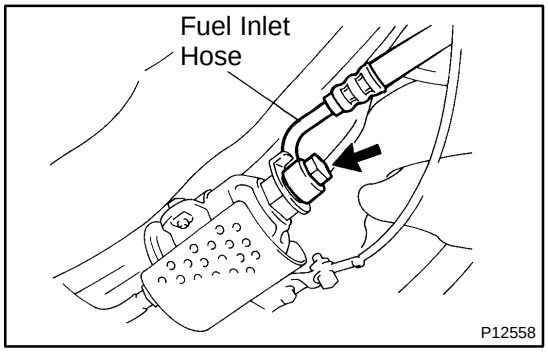

(c) Remove the union bolt and 2 gaskets, and disconnect the fuel inlet hose from the fuel filter outlet.

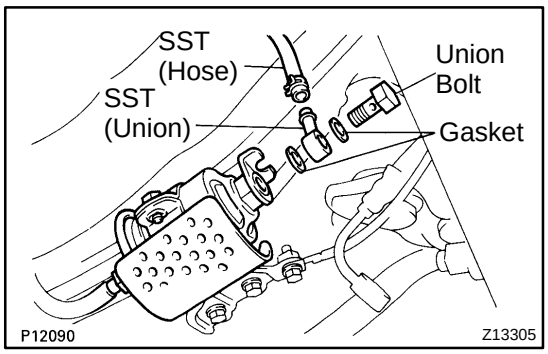

(d) Connect SST (hose) to the fuel filter outlet with SST (union), the 2 gaskets and union bolt.
SST 09268-41046 (90405-09015)
Torque: 29 N·m (300 kgf·cm, 22 ft·lbf)

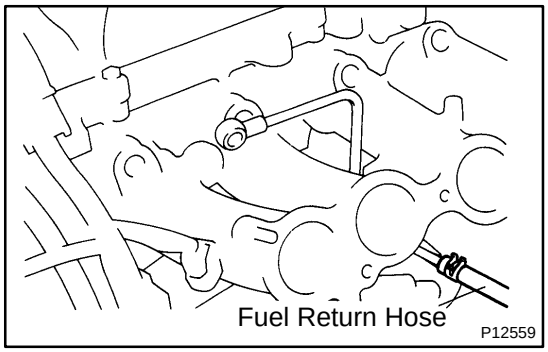

(e) Disconnect the fuel return hose from the fuel return pipe.

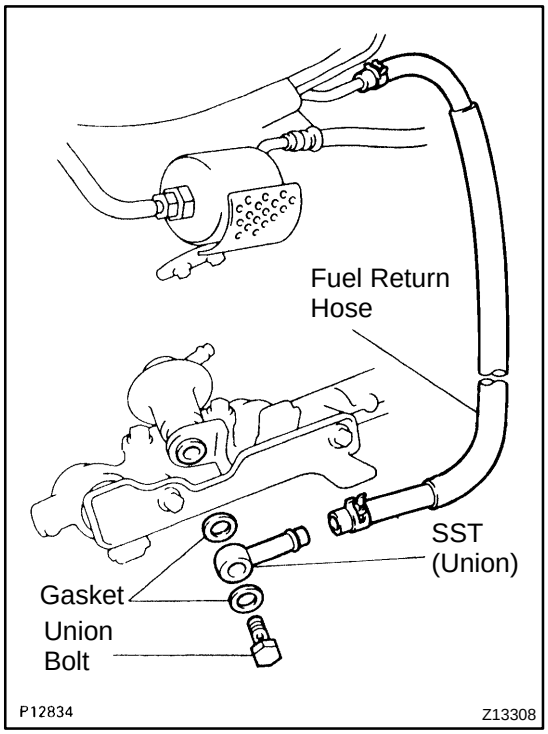

(f) Connect the fuel return hose to the fuel outlet of the pressure regulator on the delivery pipe with SST (union), the 2 gaskets and union bolt.
SST 09268-41046 (09268-41071)

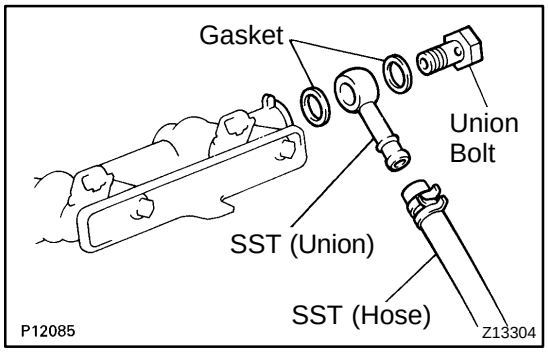

(g) Connect SST (hose) to the fuel inlet of the delivery pipe with SST (union), the 2 gaskets and union bolt.
SST 09268-41046 (90405-09015)

(h) Put the injector into the graduated cylinder.

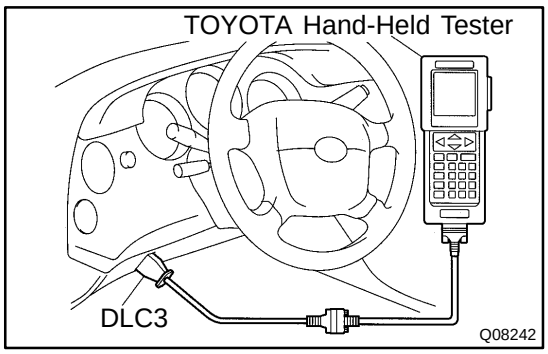

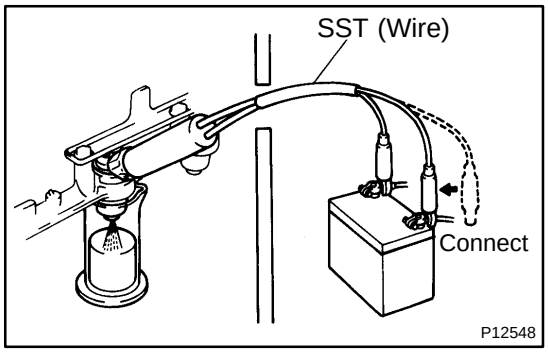

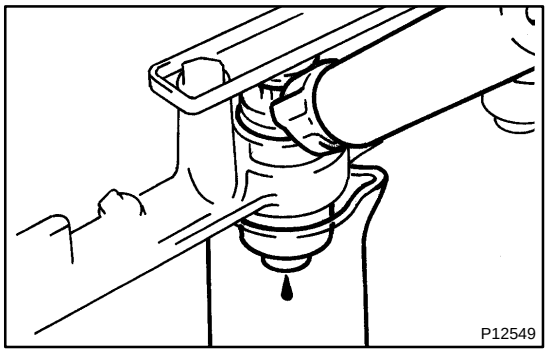

(i) Connect the TOYOTA hand-held tester to the DLC3.

(j) Turn the ignition switch ON and TOYOTA hand-held tester main switch ON.

NOTICE:

Do not start the engine.

(k) Select the active test mode on the TOYOTA hand-held tester.

(l) Please refer to the TOYOTA hand-held tester operator's manual for further details.

(m) If you have no TOYOTA hand-held tester, connect the positive (+) and negative (-) leads from the battery to the fuel pump connector.

(n) Connect SST (wire) to the injector and battery for 15 seconds, and measure the injection volume with a graduated cylinder. Test each injector 2 or 3 times.
SST 09842-30060
Injection volume:
111 - 141 cm^3 (6.8 - 8.6 cu in.) per 15 sec.
Difference between each injector:
10 cm^3 (0.6 cu in.) or less

If the injection volume is not as specified, replace the injector.

2. INSPECT LEAKAGE

(a) In the condition above, disconnect the tester probes of SST (wire) from the battery and check the fuel leakage from the injector.
SST 09842-30060
Fuel drop:
One drop or less per minutes

(b) Turn the ignition switch to LOCK.

(c) Disconnect the negative (-) terminal cable from the battery.

(d) Remove the SST.
SST 09268-41046

(e) Reconnect the fuel inlet hose to the fuel filter with 2 new gaskets and the union bolt.
Torque: 29 N·m (300 kgf·cm, 22 ft·lbf)

(f) Reconnect the fuel return hose to the fuel return pipe.

(g) Remove the 6 bolts, 3 injector holders and 6 insulators.

(h) Disconnect the TOYOTA hand-held tester from the DLC3.

SF0GU-01

REPLACEMENT

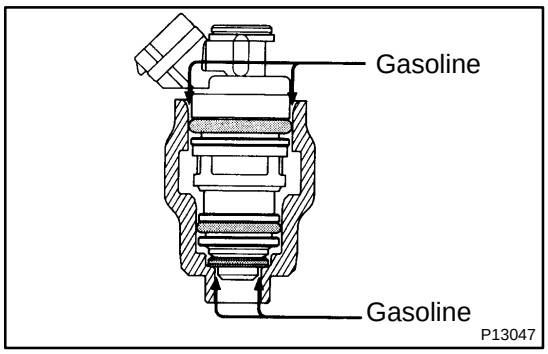

1. REMOVE INJECTORS

(a) Apply gasoline between the delivery pipe and injectors.

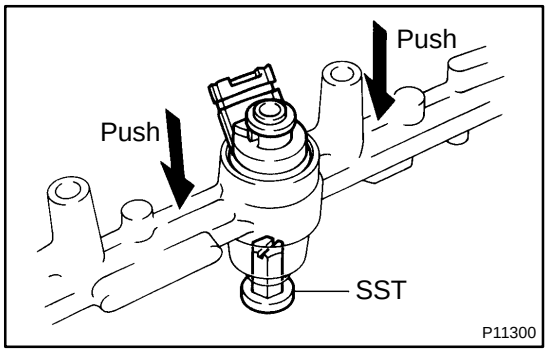

(b) Using SST, lift up the 6 injectors.
SST 09268-74010

(c) Remove the insulator and 2 O-rings from each injector.

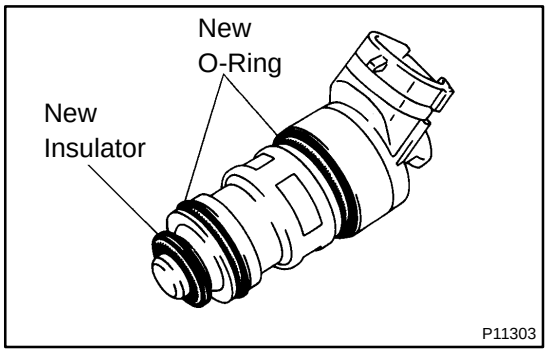

2. REINSTALL INJECTORS

(a) Apply a light coat of gasoline to 2 new O-rings.

(b) Install the 2 O-rings and new insulator to each injector.

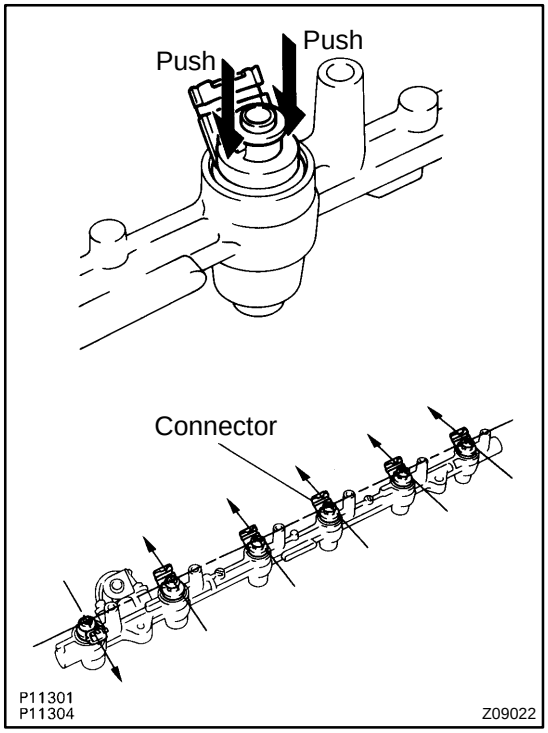

(c) Push in the 6 injectors so that the injector connectors are positioned as shown in the illustration.

FUEL PRESSURE PULSATION DAMPER

SF0GW-01

COMPONENTS

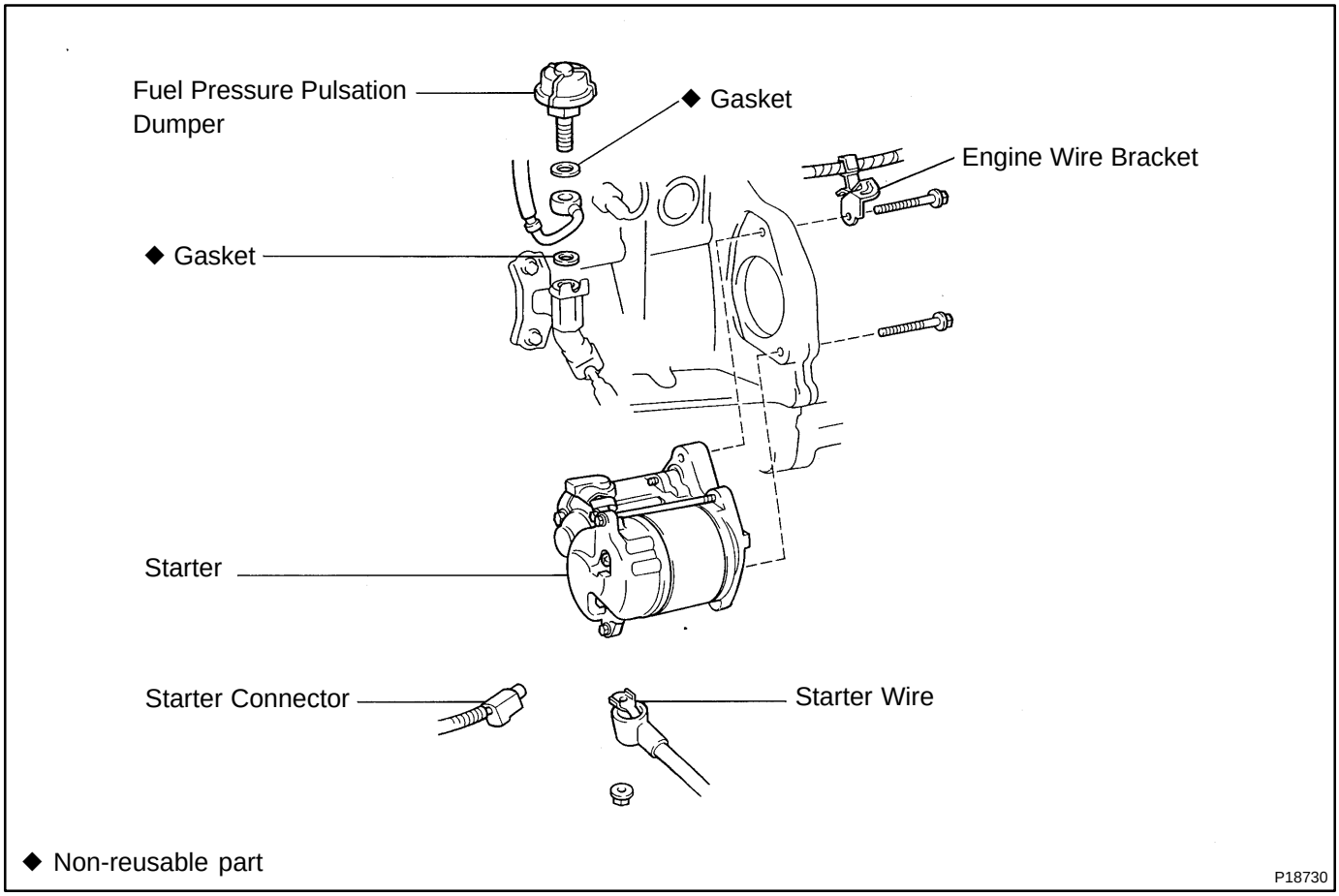

SF0GX-01

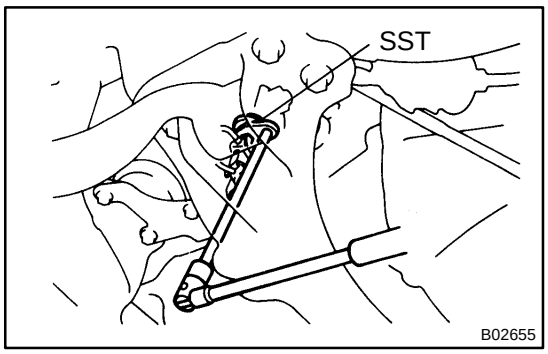

REMOVAL

1. REMOVE STARTER
(See page ST-4)

2. REMOVE FUEL PRESSURE PULSATION DAMPER

(a) Using SST, remove the pulsation damper and upper gasket.
SST 09612-24014 (09617-24011)

(b) Disconnect the fuel inlet pipe from the fuel pipe support, and remove the lower gasket.

SF0GY-02

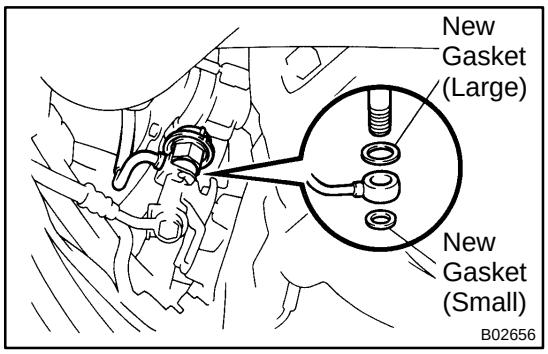

INSTALLATION

1. INSTALL FUEL PRESSURE PULSATION DAMPER

(a) Install the fuel inlet pipe and pulsation damper with 2 new gaskets.

HINT:

Different sized gaskets are used for the upper (large size) and lower (small size).

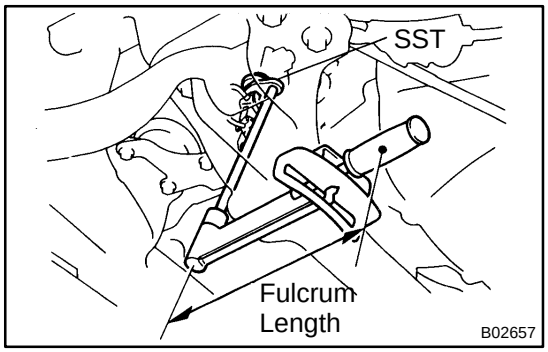

(b) Using SST, tighten the pulsation damper.
SST 09612-24014 (09617-24011)
Torque:
41 N·m (420 kgf·cm, 30 ft·lbf)
35 N·m (350 kgf·cm, 25 ft·lbf) for SST

HINT:

Use a torque wrench with a fulcrum length of 30 cm (11.81 in.).

2. INSTALL STARTER
(See page ST-15)

3. CHECK FOR FUEL LEAKS
(See page SF-1)

SF0H0-02

COMPONENTS

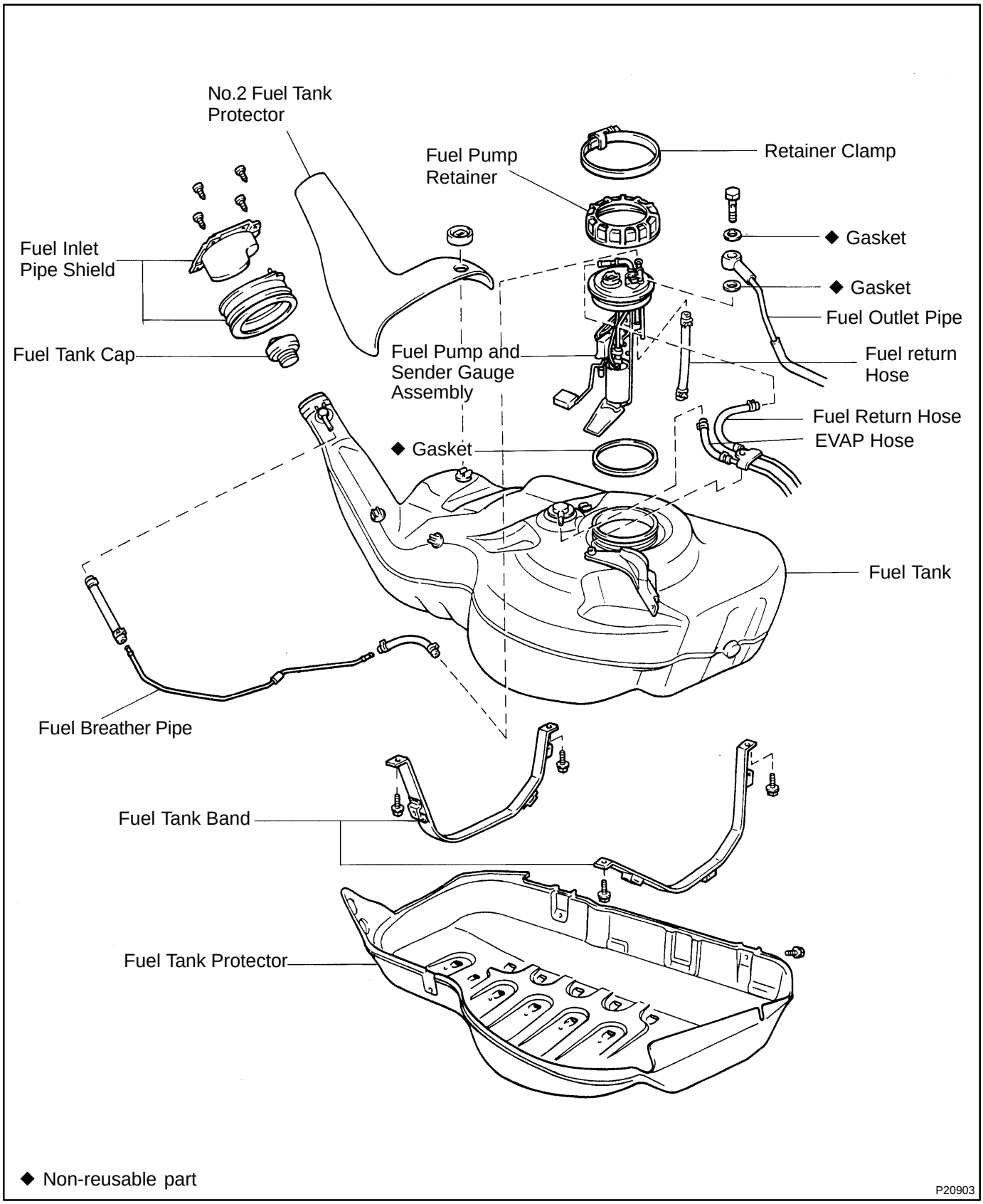

SF0H1-01

INSPECTION

INSPECT FUEL TANK AND LINE

(a) Check the fuel lines for cracks or leakage, and all connections for deformation.

(b) Check the fuel tank vapor vent system hoses and connections for looseness, sharp bends or damage.

(c) Check the fuel tank for deformation, cracks, fuel leakage or tank band looseness.

(d) Check the filler neck for damage or fuel leakage.

(e) Hose and tube connections are as shown in the illustration.

If a problem is found, repair or replace the part as necessary.

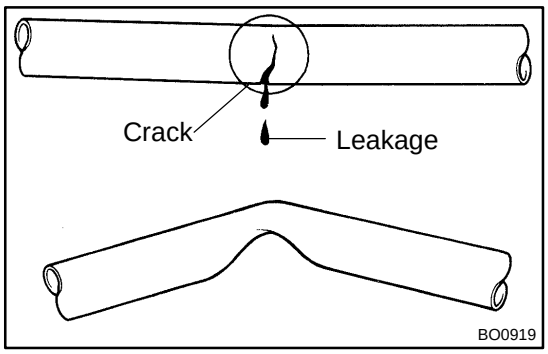

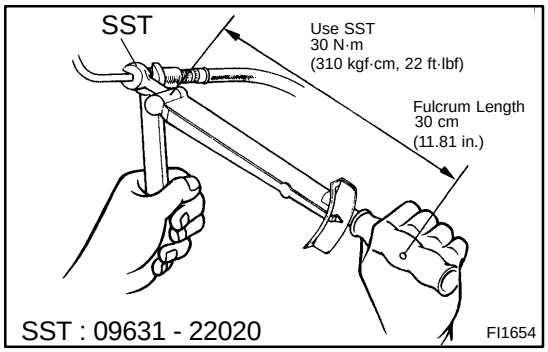

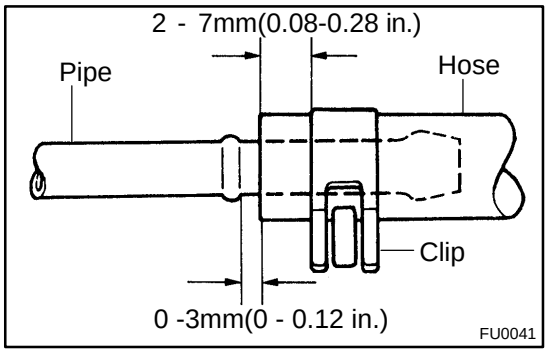

MASS AIR FLOW (MAF) METER

SF0H2-01

COMPONENTS

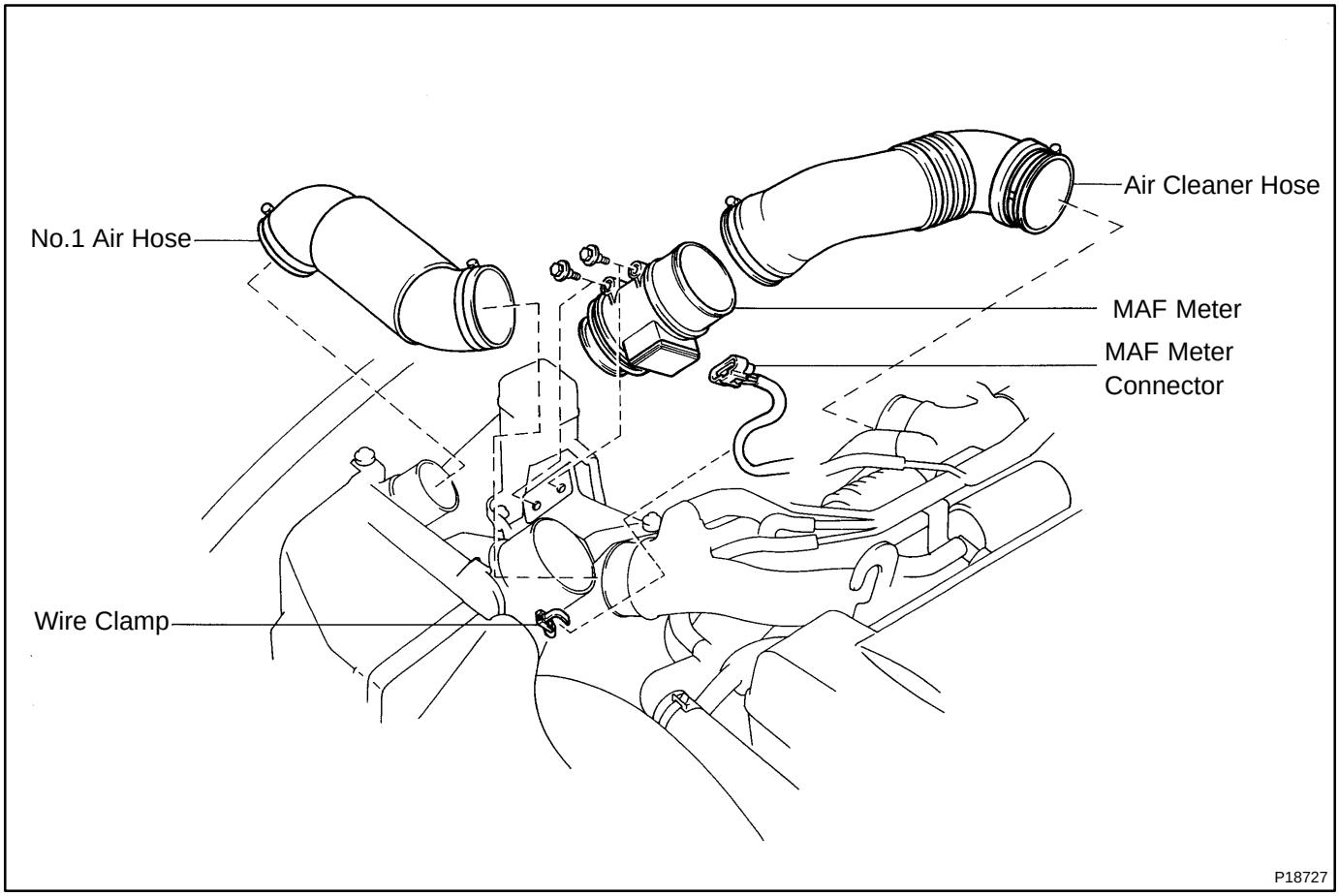

SF0H3-01

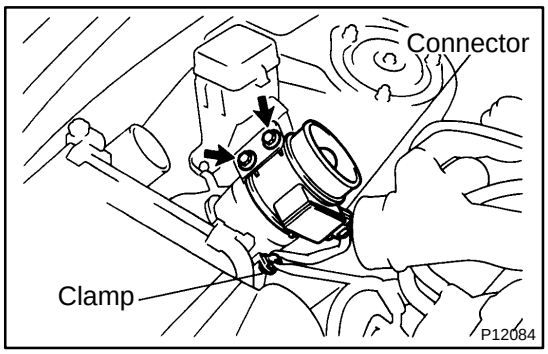

REMOVAL

1. REMOVE NO.1 AIR HOSE

2. REMOVE AIR CLEANER HOSE

3. REMOVE MAF METER

(a) Remove the 2 bolts, and disconnect the MAF meter from the air cleaner case.
Torque: 6.9 N·m (70 kgf·cm, 61 in.·lbf)

(b) Disconnect the MAF meter wire from the wire clamp on the air cleaner case.

(c) Disconnect the MAF meter connector, and remove the MAF meter.

SF0H4-01

INSPECTION

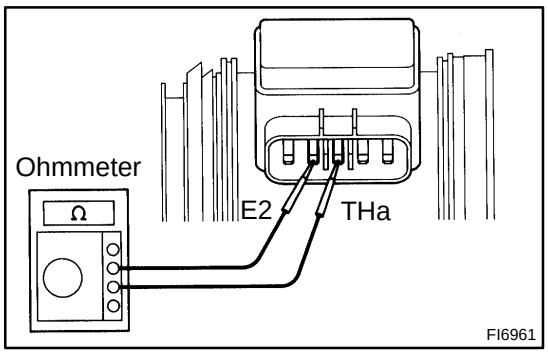

1. INSPECT MAF METER RESISTANCE

Using an ohmmeter, measure the resistance between terminals THA and E2.

Resistance:

-20˚C (-4˚F)	10 - 20 kΩ
0˚C (32˚F)	4 - 7 kΩ
20˚C (68˚F)	2 - 3 kΩ
40˚C (104˚F)	0.9 - 1.3 kΩ
60˚C (140˚F)	0.4 - 0.7 kΩ

If the resistance is not as specified, replace the MAF meter.

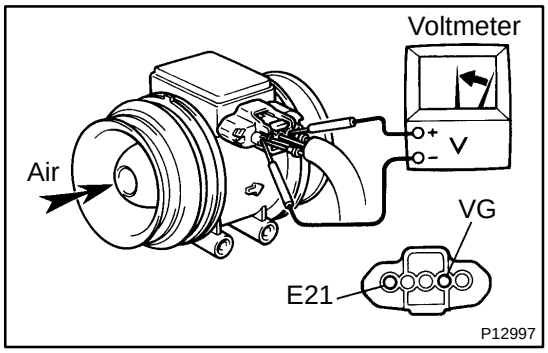

2. INSPECT MAF METER OPERATION

(a) Connectfthe MAF meter connector.
(b) Connectfthe negative (-) terminal cable to the battery.
(c) Using a voltmeter, connect the positive (+) tester probe to terminal VG, and negative (-) tester probe to terminal E21.
(d) Turn the ignition switch ON.
(e) Blow air into the MAF meter, and check that the voltage fluctuates.

If operation is not as specified, replace the MAF meter.

(f) Turn the ignition switch OFF.
(g) Disconnect the negative (-) terminal cable from the battery.
(h) Disconnect the MAF meter connector.

THROTTLE BODY

SF0H6-01

ON-VEHICLE INSPECTION

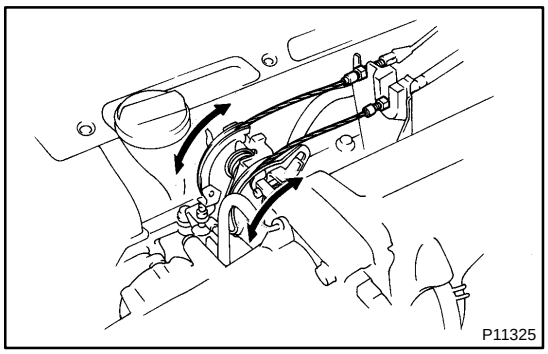

1. INSPECT THROTTLE BODY

(a) Check that the throttle linkage moves smoothly.

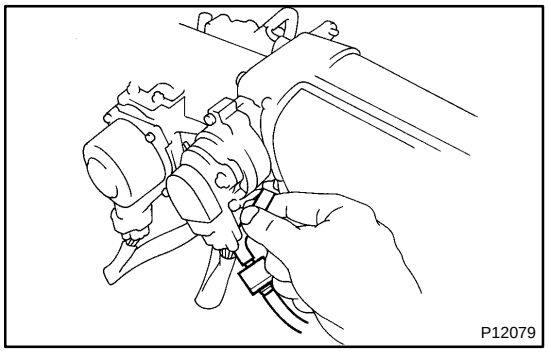

(b) Check the vacuum at the purge port.
- Start the engine.
- Check the vacuum with your finger.

Port name	At idle	At 3,000 rpm
Purge	No vacuum	Vacuum

2. INSPECT DASHPOT

(a) Warm up engine.
Allow the engine to warm up to normal operating temperature.

(b) Check idle speed.
Idle speed (Transmission in neutral position): 650 ± 50 rpm

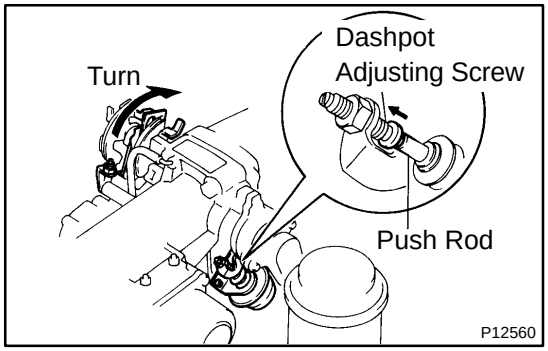

(c) Check and adjust dashpot setting speed.
(1) Disconnect the control cables from the throttle body.
(2) Turn the throttle linkage until the dashpot adjusting screw starts to separate from the push rod. Then keep the throttle linkage at that position.
(3) Check that the dashpot is set.
Dashpot setting speed: 2,300 ± 400 rpm
(4) Reconnect the control cables to the throttle body.

(d) Check VTV operation
(1) Maintain the engine speed at 3,500 rpm.
(2) Release the throttle valve, and check that the engine returns to idle in a few seconds.

3. INSPECT THROTTLE OPENER

(a) Warm up engine

Allow the engine to warm up to normal operating temperature.

(b) Check idle speed

Idle speed (Transmission in neutral position): 650 ± 50 rpm

(c) Check throttle opener setting speed

(1) Disconnect the throttle opener vacuum hose from the throttle body, and plug the throttle body port.

(2) Maintain the engine speed at 2,500 rpm.

(3) Release the throttle valve.

(4) Check that the throttle opener is set.

Throttle opener setting speed: 1,500 ± 200 rpm

(5) Adjust the throttle opener setting speed by turning the throttle opener adjusting screw.

(6) Reconnect the throttle opener vacuum hose to the throttle body.

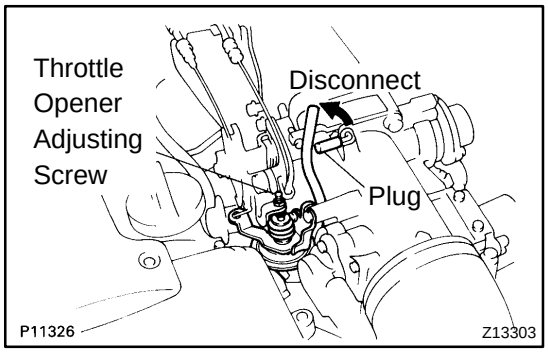

SF0H7-01

COMPONENTS

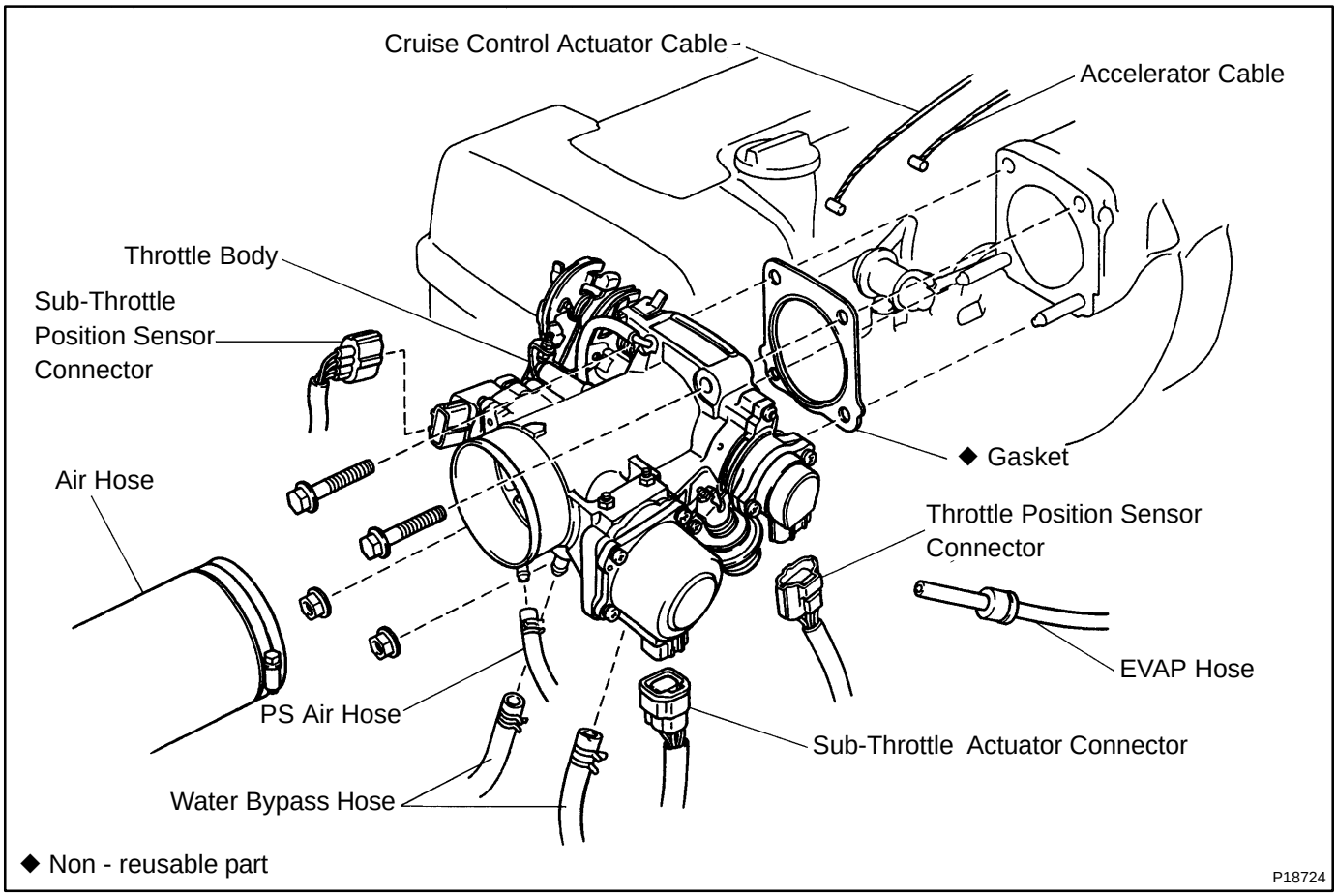

SF0H8-01

REMOVAL

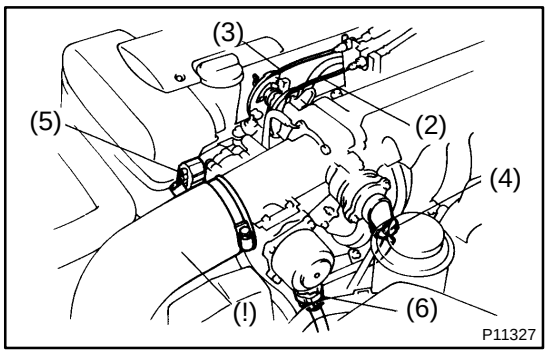

1. DRAIN ENGINE COOLANT

2. REMOVE THROTTLE BODY

(a) Disconnect the hose, cables and connectors from the throttle body:
- (1) Air hose
- (2) Accelerator cable
- (3) Cruise control actuator cable
- (4) Throttle position sensor connector
- (5) Sub-throttle position sensor connector
- (6) Sub-throttle actuator connector

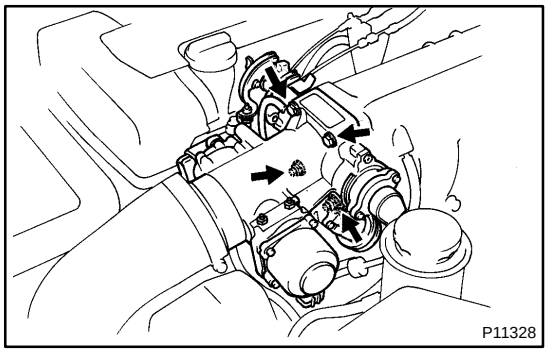

(b) Remove the 2 bolts and 2 nuts, and disconnect the throttle body from the air intake chamber.
Torque: 21 N·m (210 kgf·cm, 15 ft·lbf)

(c) Remove the gasket.

HINT:

Use a new gasket.

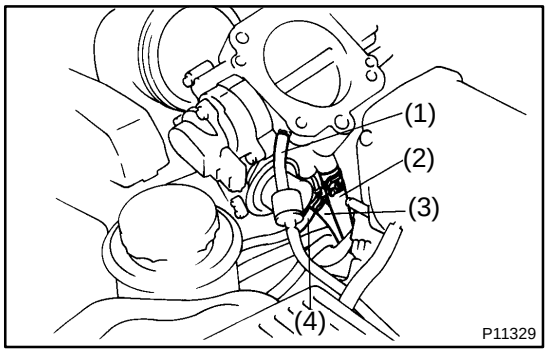

(d) Disconnect these hoses from the throttle body, and remove the throttle body:
- (1) EVAP hose
- (2) Water bypass hose (from No.4 water bypass pipe)
- (3) Water bypass hose (from cylinder head)
- (4) PS air hose

SF0H9-02

INSPECTION

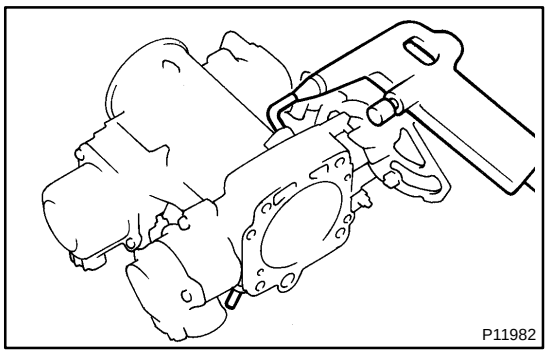

1. CLEAN THROTTLE BODY

(a) Using a soft brush and carburetor cleaner, clean the cast parts.

(b) Using compressed air, clean all the passages and apertures.

NOTICE:

To prevent deterioration, do not clean the throttle position sensors, actuator, dashpot and throttle opener.

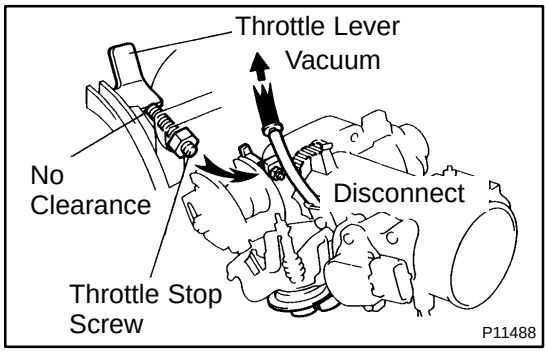

2. INSPECT THROTTLE VALVE

(a) Disconnect the throttle opener vacuum hose from the throttle body.

(b) Apply vacuum to the throttle opener.

(c) Check that there is no clearance between the throttle stop screw and throttle lever when the throttle valve is fully closed.

(d) Reconnect the vacuum hose to the throttle body.

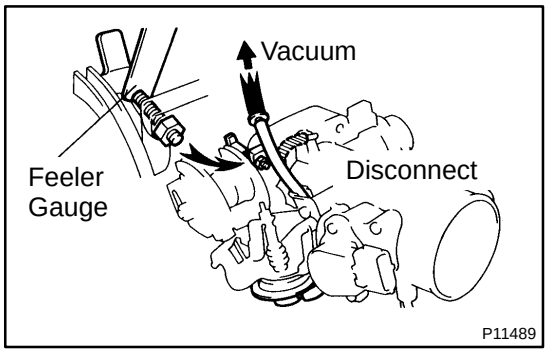

3. INSPECT THROTTLE POSITION SENSOR

(a) Disconnect the throttle opener vacuum hose from the throttle body.

(b) Apply vacuum to the throttle opener.

(c) Insert a 0.54 mm (0.021 in.) or 0.70 mm (0.028 in.) feeler gauge between the throttle stop screw and stop lever.

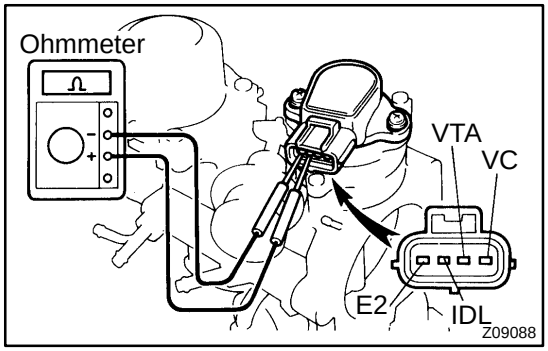

(d) Using an ohmmeter, measure the resistance between each terminal.

Clearance between lever and stop screw	Between terminals	Resistance
0 mm (0 in.)	VTA - E2	0.34 - 6.3 kΩ
0.54 mm (0.021 in.)	IDL - E2	0.5 kΩ or less
0.70 mm (0.028 in.)	IDL - E2	Infinity
Throttle valve fully open	VTA - E2	2.4 - 11.2 kΩ
-	VC - E2	3.1 - 7.2 kΩ

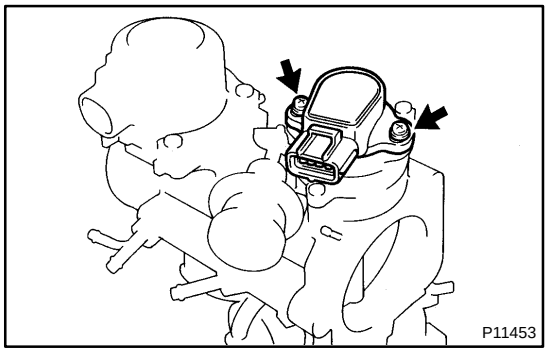

4. IF NECESSARY, ADJUST THROTTLE POSITION SENSOR

(a) Loosen the 2 set screws of the sensor.

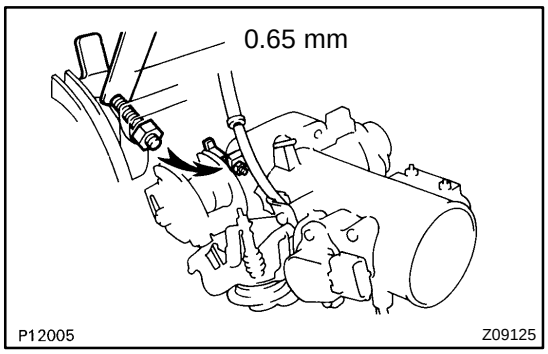

(b) Insert a 0.65 mm (0.026 in.) feeler gauge between the throttle stop screw and stop lever.

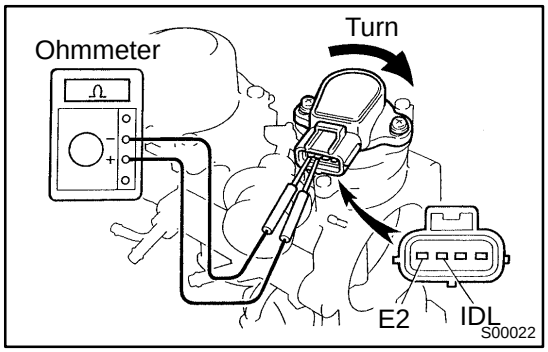

(c) Connect the tester probe of an ohmmeter to the terminals IDL and E2 of the sensor.

(d) Gradually turn the sensor clockwise until the ohmmeter deflects, and secure it with the 2 set screws.

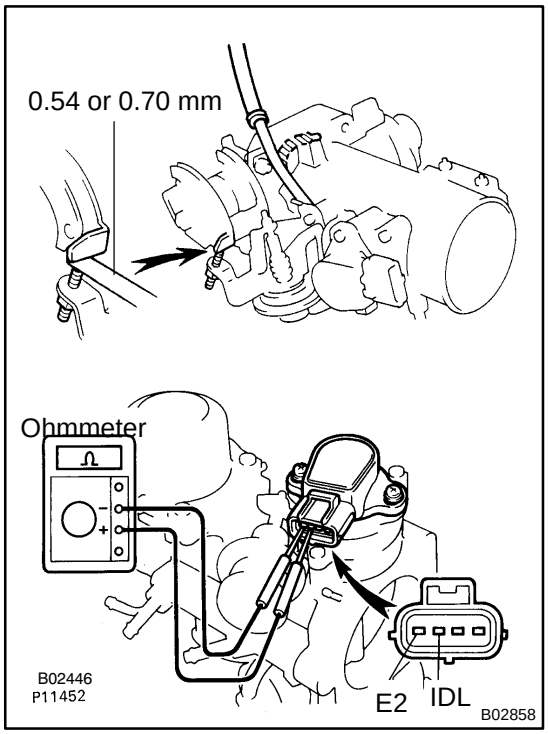

(e) Recheck the continuity between terminals IDL and E2.

Clearance between lever and stop screw	Continuity (IDL - E2)
0.54 mm (0.021 in.)	Continuity
0.75 mm (0.028 in.)	No continuity

(f) Reconnect the vacuum hose to the throttle body.

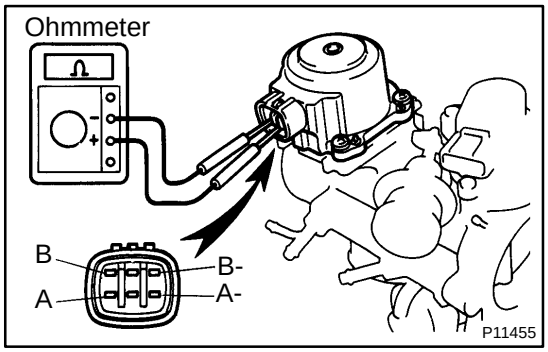

5. INSPECT SUB-THROTTLE ACTUATOR

Using an ohmmeter, measure the resistance between the terminals (A and A-,to B and B-).

Resistance: 0.82 - 0.98 Ω at 20˚C (68˚F)

If the resistance is not as specified, replace the actuator.

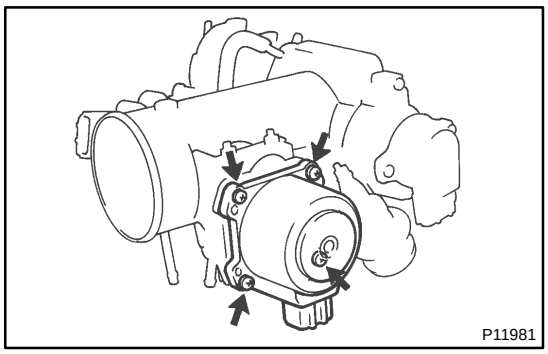

6. REMOVE SUB-THROTTLE ACTUATOR

Remove the 4 screws and sub-throttle actuator.

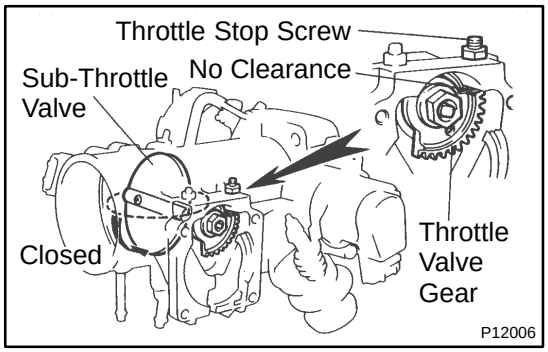

7. INSPECT SUB-THROTTLE VALVE

Check that there is no clearance between the throttle stop screw and throttle valve gear when the sub-throttle valve is fully closed.

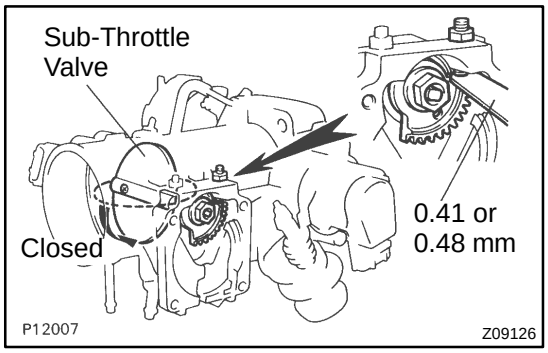

8. INSPECT SUB-THROTTLE POSITION SENSOR

(a) Set the sub-throttle valve to fully closed position.

(b) Insert a 0.41 mm (0.016 in.) or 0.48 mm (0.019 in.) feeler gauge between the throttle stop screw and throttle valve gear.

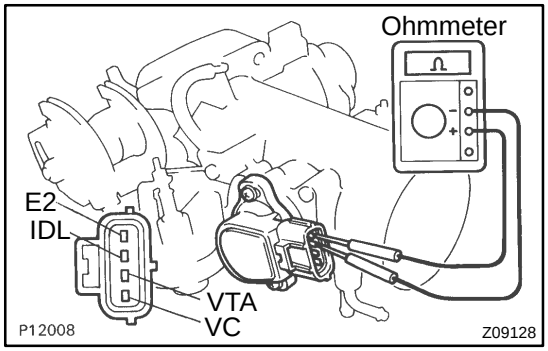

(c) Using an ohmmeter, measure the resistance between terminals.

Clearance between lever and stop screw	Between terminals	Resistance
0 mm (0 in.)	VTA - E2	0.3 - 6.3 kΩ
0.41 mm (0.016 in.)	IDL - E2	0.5 kΩ or less
0.48 mm (0.019 in.)	IDL - E2	Infinity
Throttle valve fully open	VTA - E2	2.0 - 10.8 kΩ
-	VC - E2	3.5 - 6.5 kΩ

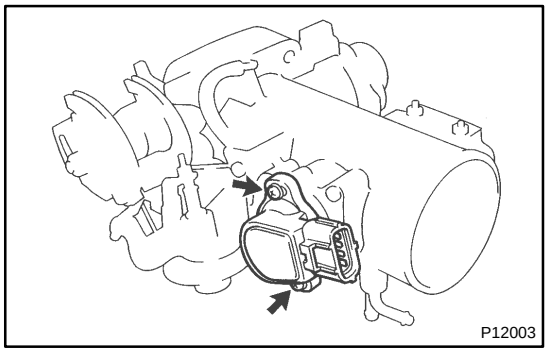

9. NECESSARY, ADJUST SUB-THROTTLE POSITION SENSOR

(a) Loosen the 2 set screws of the sensor.

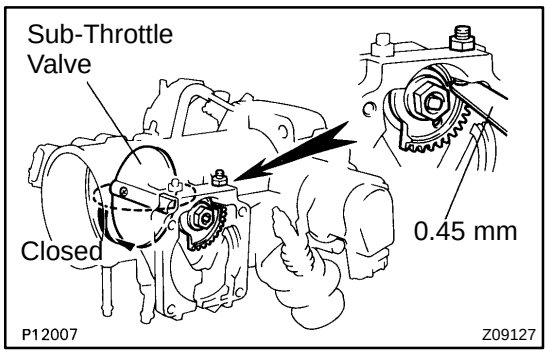

(b) Set the sub-throttle valve to fully closed position.

(c) Insert a 0.45 mm (0.018 in.) feeler gauge, between the throttle stop screw and throttle valve gear.

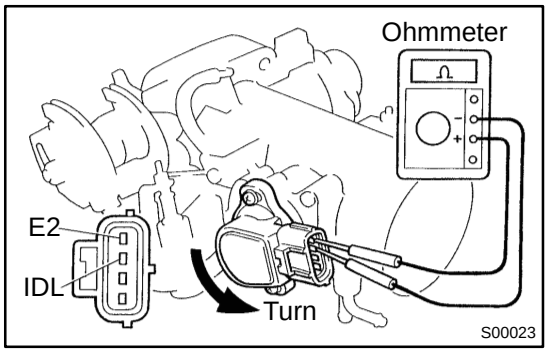

(d) Connect the tester probe of an ohmmeter to the terminals IDL and E2 of the sensor.

(e) Gradually turn the sensor clockwise until the ohmmeter deflects, and secure it with the 2 set screws.

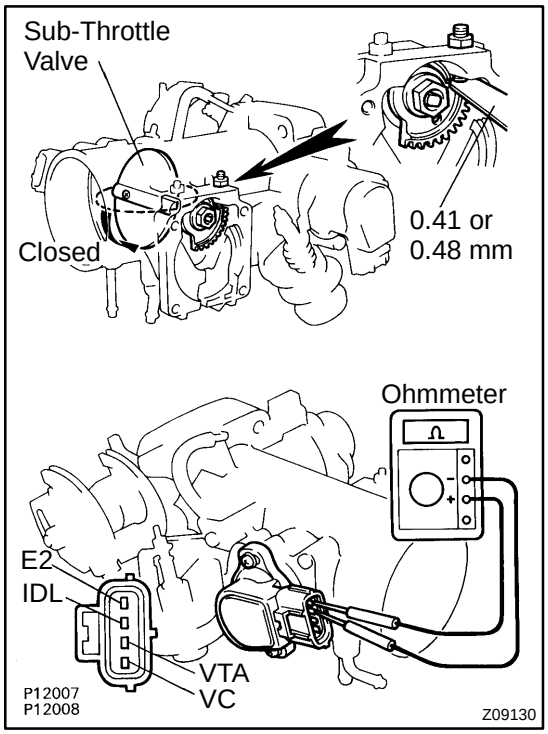

(f) Recheck the continuity between terminals IDL and E2.

Clearance between lever and stop screw	Continuity (IDL - E2)
0.41 mm (0.016 in.)	Continuity
0.48 mm (0.019 in.)	No continuity

10. REINSTALL SUB-THROTTLE ACTUATOR

Install the sub-throttle actuator with the 4 screws.

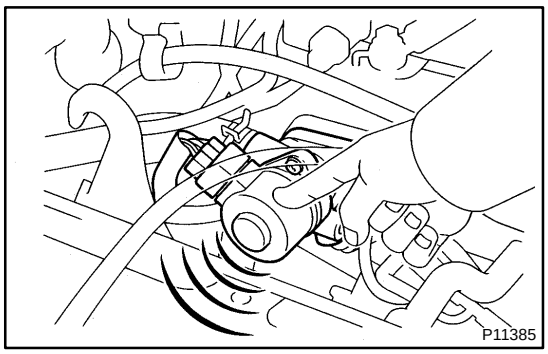

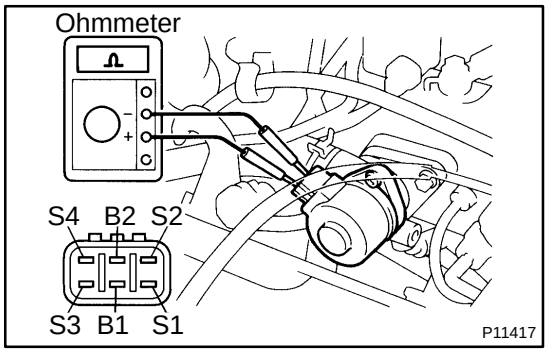

IDLE AIR CONTROL (IAC) VALVE

SF0HB-01

ON-VEHICLE INSPECTION

1. INSPECT IAC VALVE FOR OPERATING SOUND

Check that there is a clicking sound immediately after stopping the engine.

If operation is not as specified, check the IAC valve, wiring and ECM.

2. INSPECT IAC VALVE RESISTANCE

NOTICE:

"Cold" and "Hot" in these sentences express the temperature of the coils themselves.

"Cold" is from -10˚C (14˚F) to 50˚C (122˚F) and "Hot" is from 50˚C (122˚F) to 100˚C (212˚F).

Using an ohmmeter, measure the resistance between the terminals (B1 (or B2) to others).

Resistance:

Cold	15 - 25 Ω
Hot	20 - 30 Ω

If resistance is not as specified, replace the IAC valve.

SF0HC-01

COMPONENTS

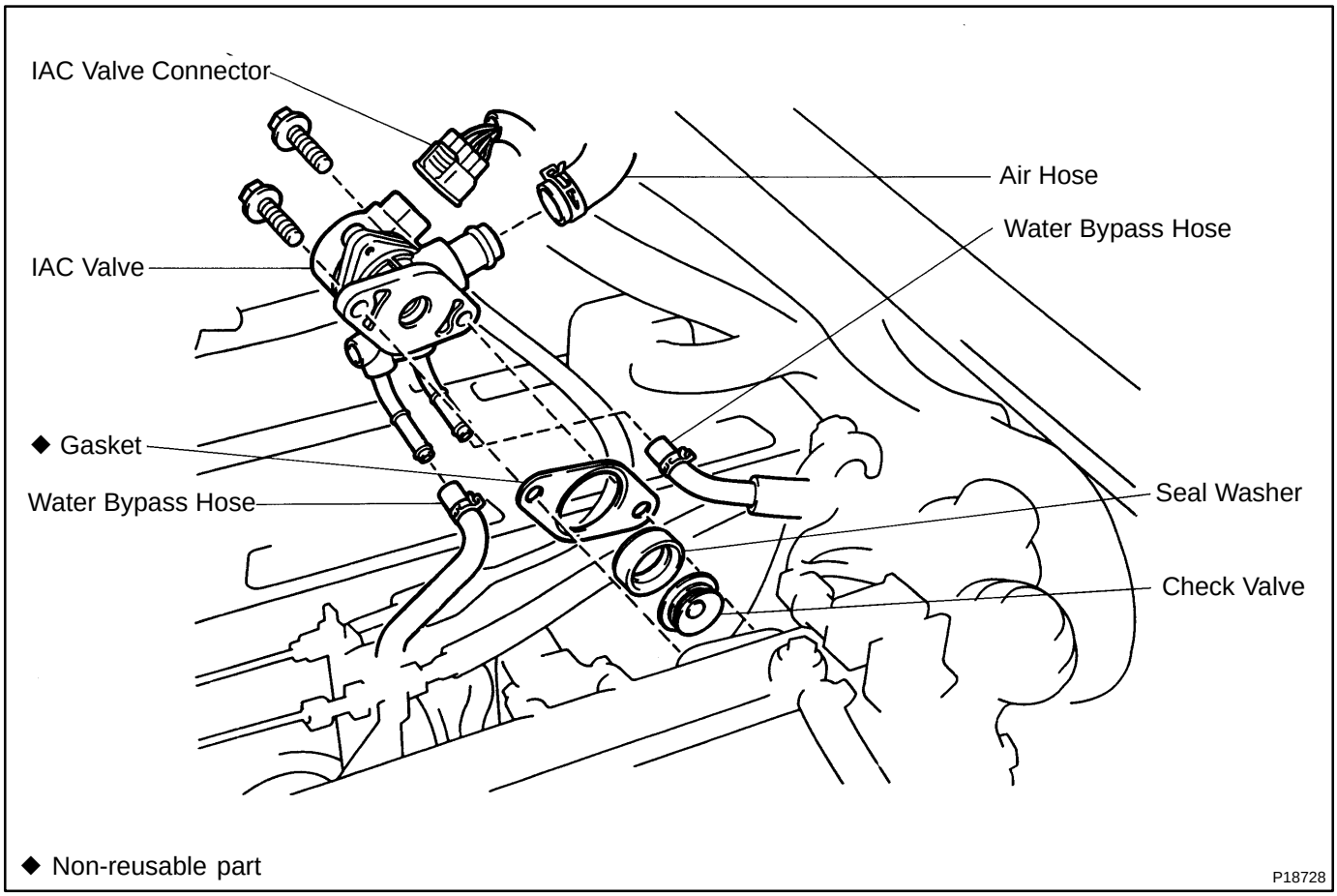

SF0HD-01

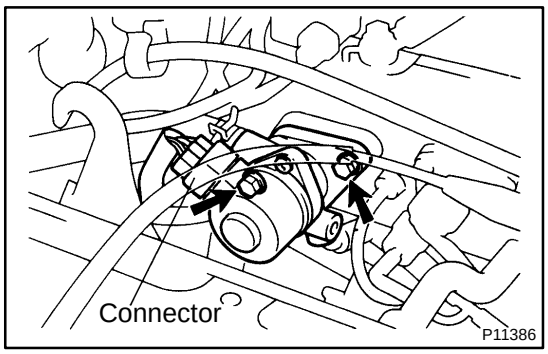

REMOVAL

1. DRAIN ENGINE COOLANT

2. DISCONNECT IAC VALVE CONNECTOR

3. REMOVE IAC VALVE

(a) Remove the 2 bolts, and disconnect the IAC valve from the air intake chamber.

(b) Remove the gasket
.

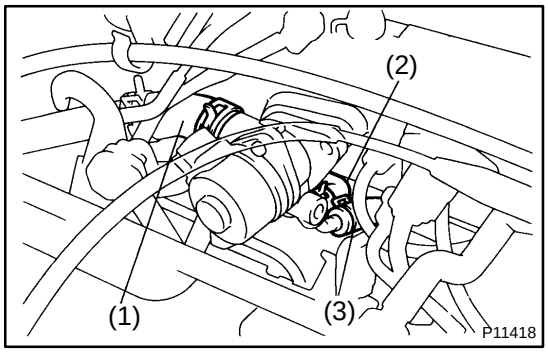

(c) Disconnect these hoses from the IAC valve, and remove the IAC valve:
   (1) Air hose
   (2) Water bypass hose (from No.2 water bypass pipe)
   (3) Water bypass hose (from No.4 water bypass pipe)

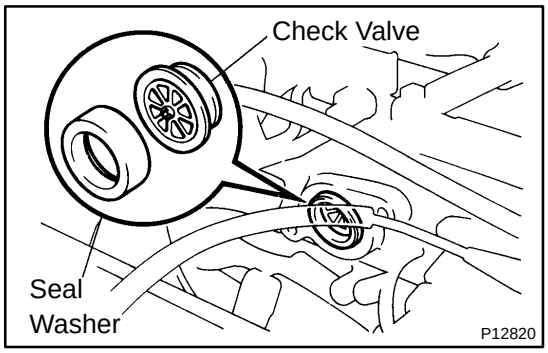

(d) Remove the seal washer and check valve.

SF0HE-01

INSPECTION

INSPECT IAC VALVE OPERATION

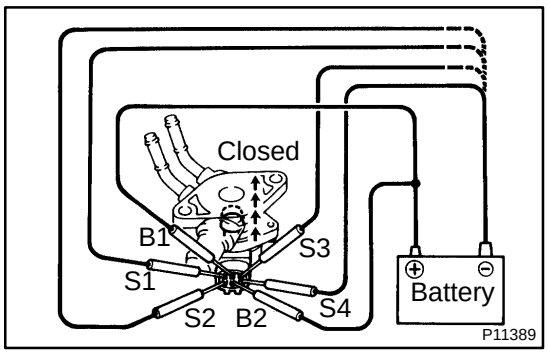

(a) Apply battery positive voltage to terminals B1 and B2, and while repeatedly grounding S1 - S2 - S3 - S4 - S1 in sequence, and check that the valve moves toward the closed position.

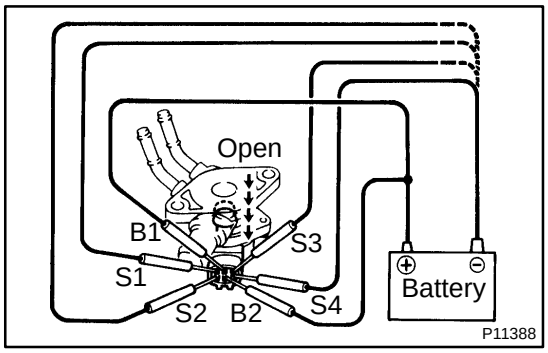

(b) Apply battery positive voltage to terminals B1 and B2, and while repeatedly grounding S4 - S3 - S2 - S1 - S4 in sequence, check that the valve moves toward the open position.

If operation is not as specified, replace the IAC valve.

SF0HF-01

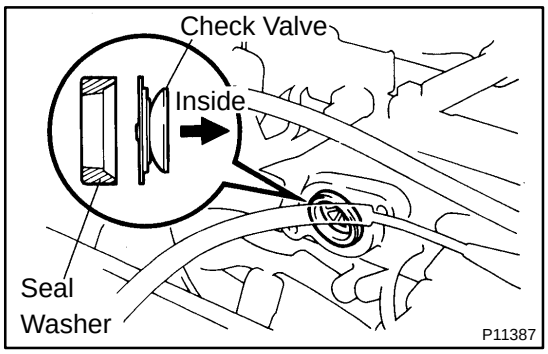

INSTALLATION

1. INSTALL IAC VALVE

(a) Install the check valve and seal washer.

NOTICE:

Be careful of the check valve and seal washer installation direction.

(b) Connect these hoses:

- Air hose
- Water bypass hose (from No.2 water bypass pipe)
- Water bypass hose (from No.4 water bypass pipe)

(c) Install a new gasket and the IAC valve with the 2 bolts.
Torque: 21 N·m (210 kgf·cm, 15 ft·lbf)

2. CONNECT IAC VALVE CONNECTOR

3. FILL WITH ENGINE COOLANT

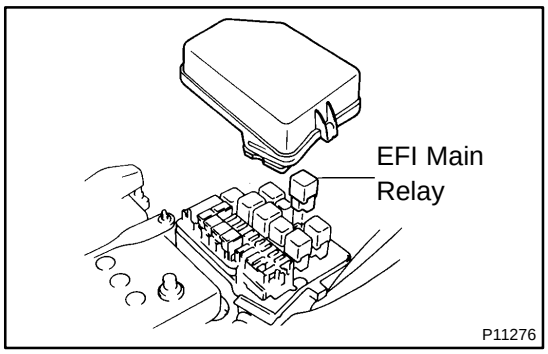

EFI MAIN RELAY

SF0HG-01

INSPECTION

1. REMOVE EFI MAIN RELAY

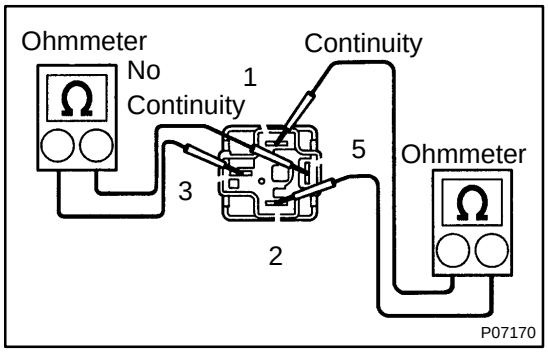

2. INSPECT EFI MAIN RELAY CONTINUITY

(a) Using an ohmmeter, check that there is continuity between terminals 1 and 2.

If there is no continuity, replace the relay.

(b) Check that there is no continuity between terminals 3 and 5.

If there is continuity, replace the relay.

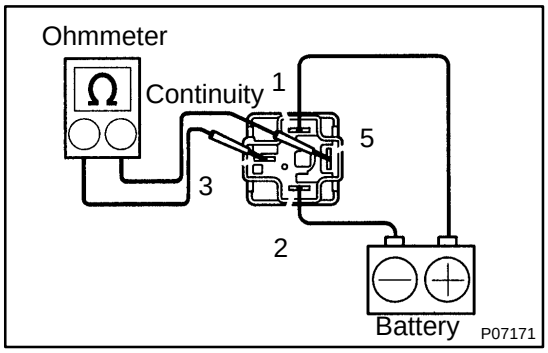

3. INSPECT EFI MAIN RELAY OPERATION

(a) Apply battery positive voltage across terminals 1 and 2.

(b) Using an ohmmeter, check that there is continuity between terminals 3 and 5.

If there is no continuity, replace the relay.

4. REINSTALL EFI MAIN RELAY

EFI NO.2 RELAY

SF0HH-01

INSPECTION

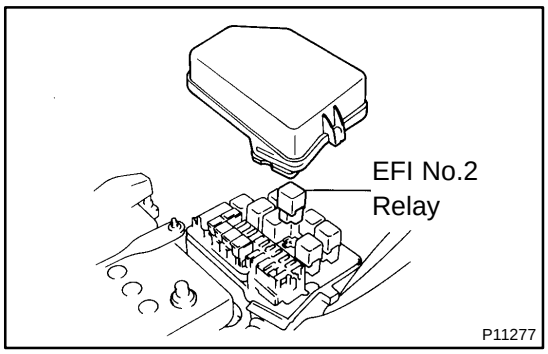

1. REMOVE EFI NO.2 RELAY

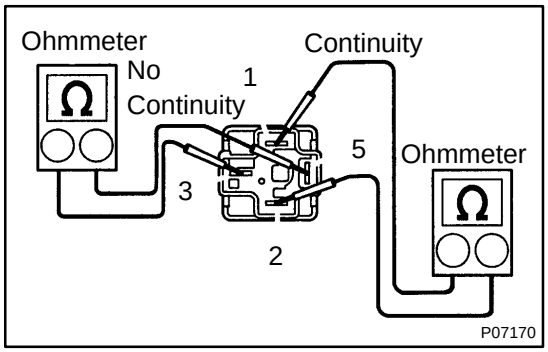

2. INSPECT EFI NO.2 RELAY CONTINUITY

(a) Using an ohmmeter, check that there is continuity between terminals 1 and 2.

If there is no continuity, replace the relay.

(b) Check that there is no continuity between terminals 3 and 5.

If there is continuity, replace the relay.

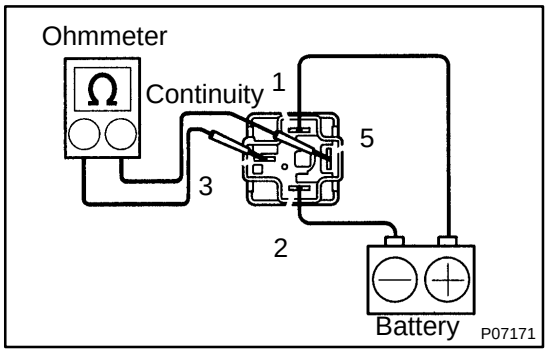

3. INSPECT EFI NO.2 RELAY OPERATION

(a) Apply battery positive voltage across terminals 1 and 2.

(b) Using an ohmmeter, check that there is continuity between terminals 3 and 5.

If there is no continuity, replace the relay.

4. REINSTALL EFI NO.2 RELAY

SOLENOID RESISTOR

COMPONENTS

SF0HI-01

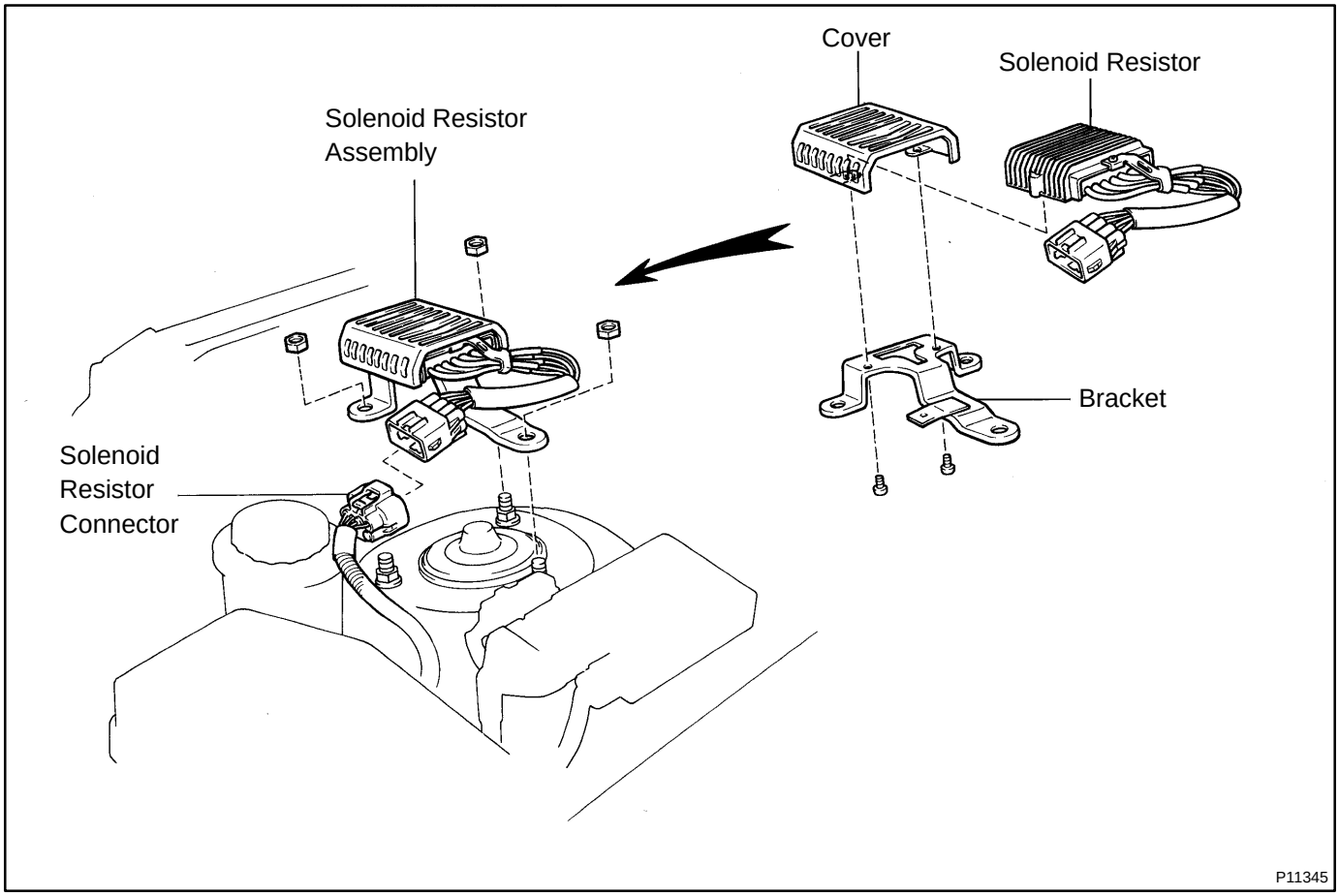

SF0HJ-01

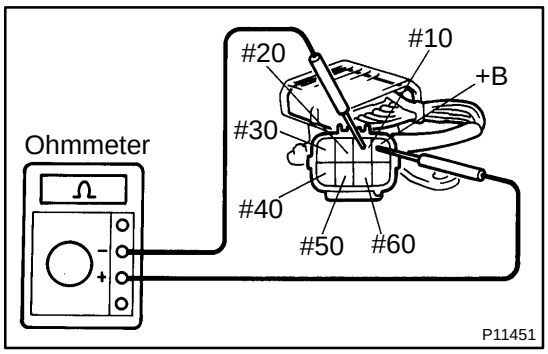

INSPECTION

1. DISCONNECT SOLENOID RESISTOR CONNECTOR

2. INSPECT SOLENOID RESISTOR

Using an ohmmeter, measure the resistance between terminal +B and other terminals.

Resistance: Approx. 6 Ω at 20˚C (68˚F)

If the resistance is not as specified, replace the resistor.

3. RECONNECT SOLENOID RESISTOR CONNECTOR

VSV FOR FUEL PRESSURE CONTROL

SF0HK-01

COMPONENTS

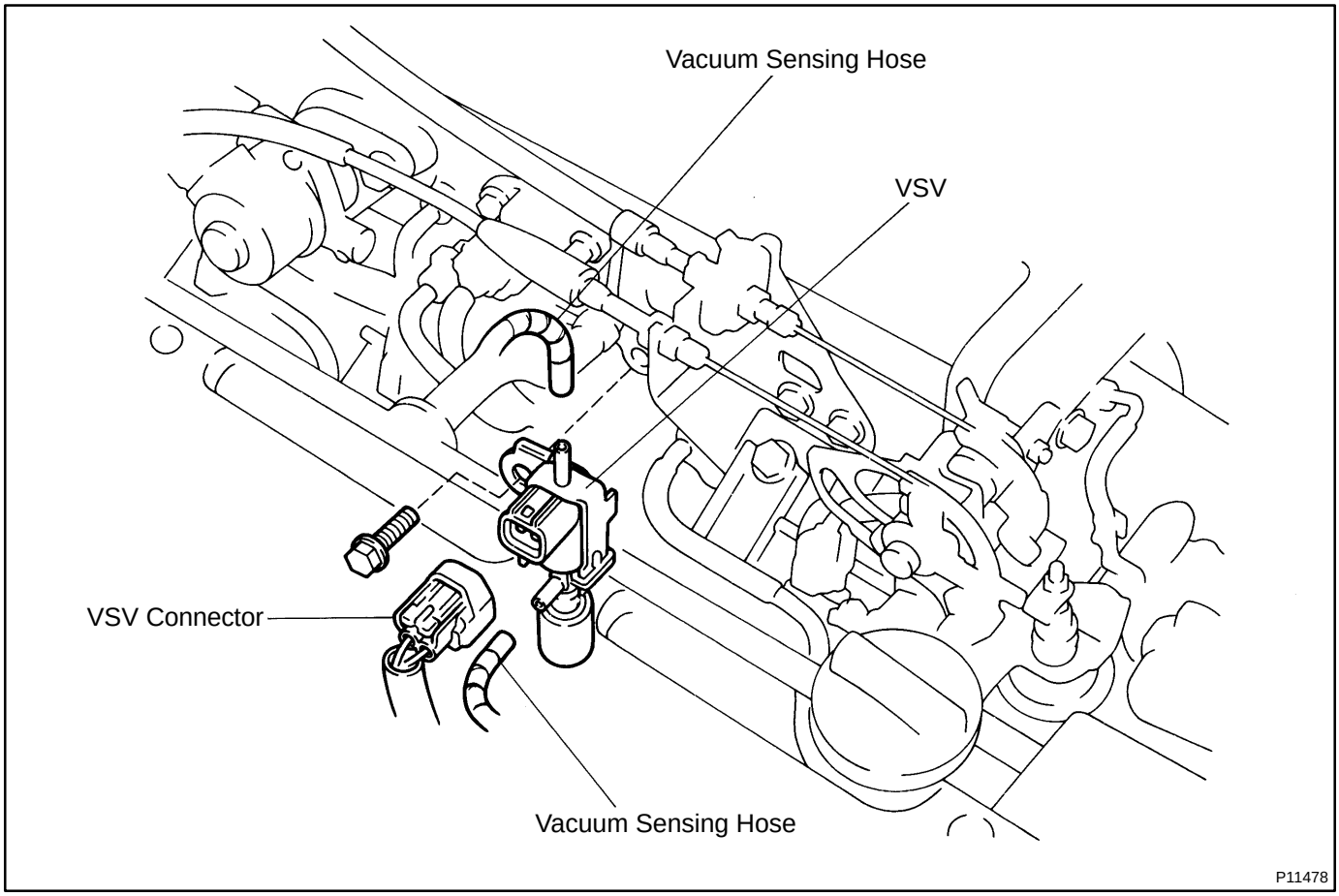

SF0HL-01

INSPECTION

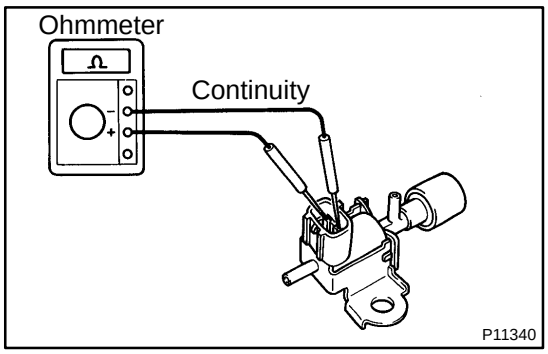

1. REMOVE VSV

2. INSPECT VSV FOR OPEN CIRCUIT

Using an ohmmeter, check that there is continuity between the terminals.

Resistance: 33 - 39 Ω at 20˚C (68˚F)

If there is no continuity, replace the VSV.

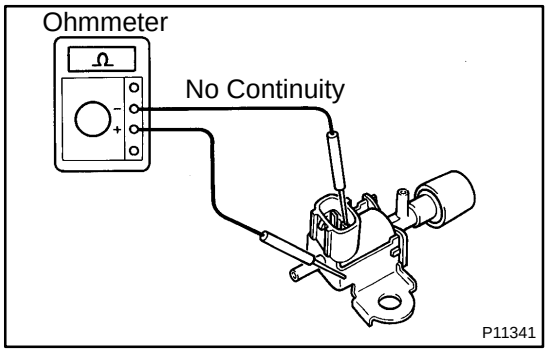

3. INSPECT VSV FOR GROUND

Using an ohmmeter, check that there is no continuity between each terminal and the body.

If there is continuity, replace the VSV.

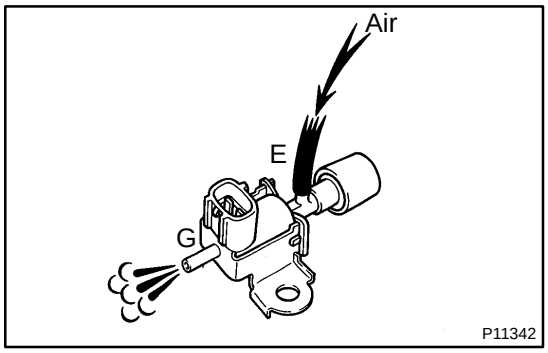

4. INSPECT VSV OPERATION

(a) Check that air flows from port E to G.

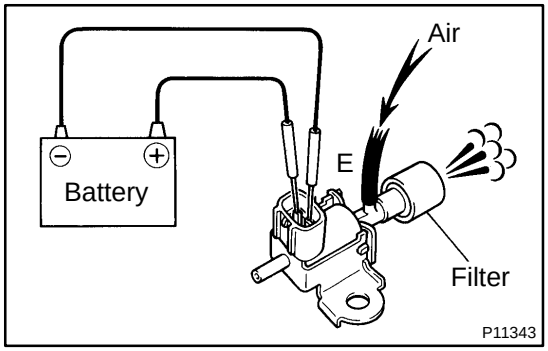

(b) Apply battery positive voltage across the terminals.

(c) Check that air flows from port E to the filter.

If operation is not as specified, replace the VSV.

5. REINSTALL VSV

VSV FOR INTAKE AIR CONTROL VALVE

SF0HM-01

COMPONENTS

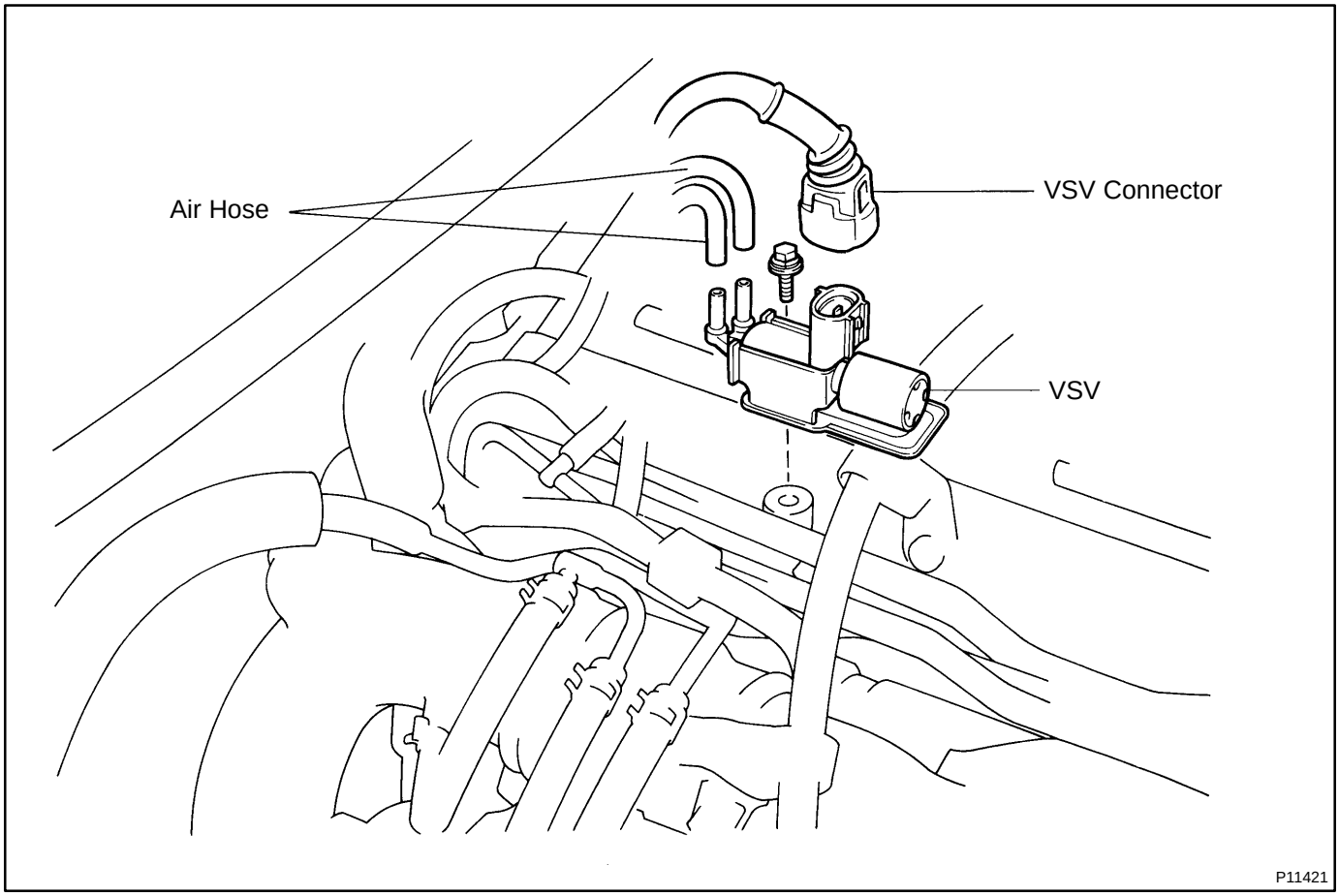

SF0HN-01

INSPECTION

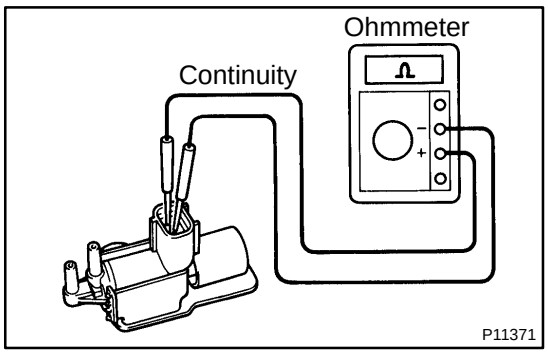

1. REMOVE VSV

2. INSPECT VSV FOR OPEN CIRCUIT

Using an ohmmeter, check that there is continuity between the terminals.

Resistance: 38.5 - 44.5 Ω at 20˚C (68˚F)

If there is no continuity, replace the VSV.

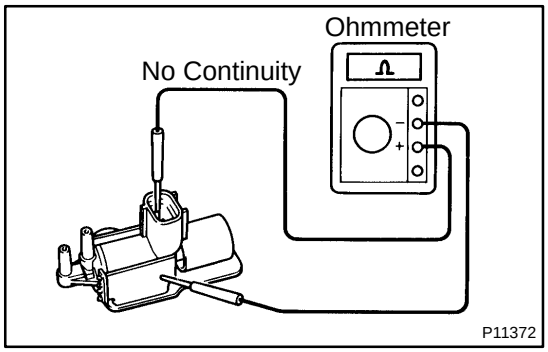

3. INSPECT VSV FOR GROUND

Using an ohmmeter, check that there is no continuity between each terminal and the body.

If there is continuity, replace the VSV.

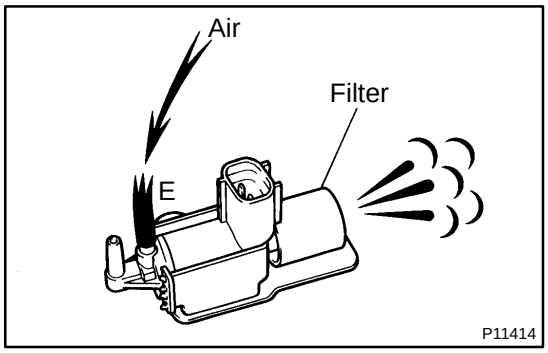

4. INSPECT VSV OPERATION

(a) Check that air flows from port E to the filter.

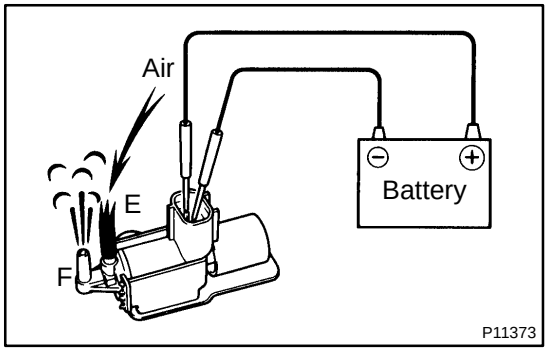

(b) Apply battery positive voltage across the terminals.

(c) Check that air flows from port E to F.

If operation is not as specified, replace the VSV.

5. REINSTALL VSV

VSV FOR WASTE GATE VALVE

SF0HO-01

COMPONENTS

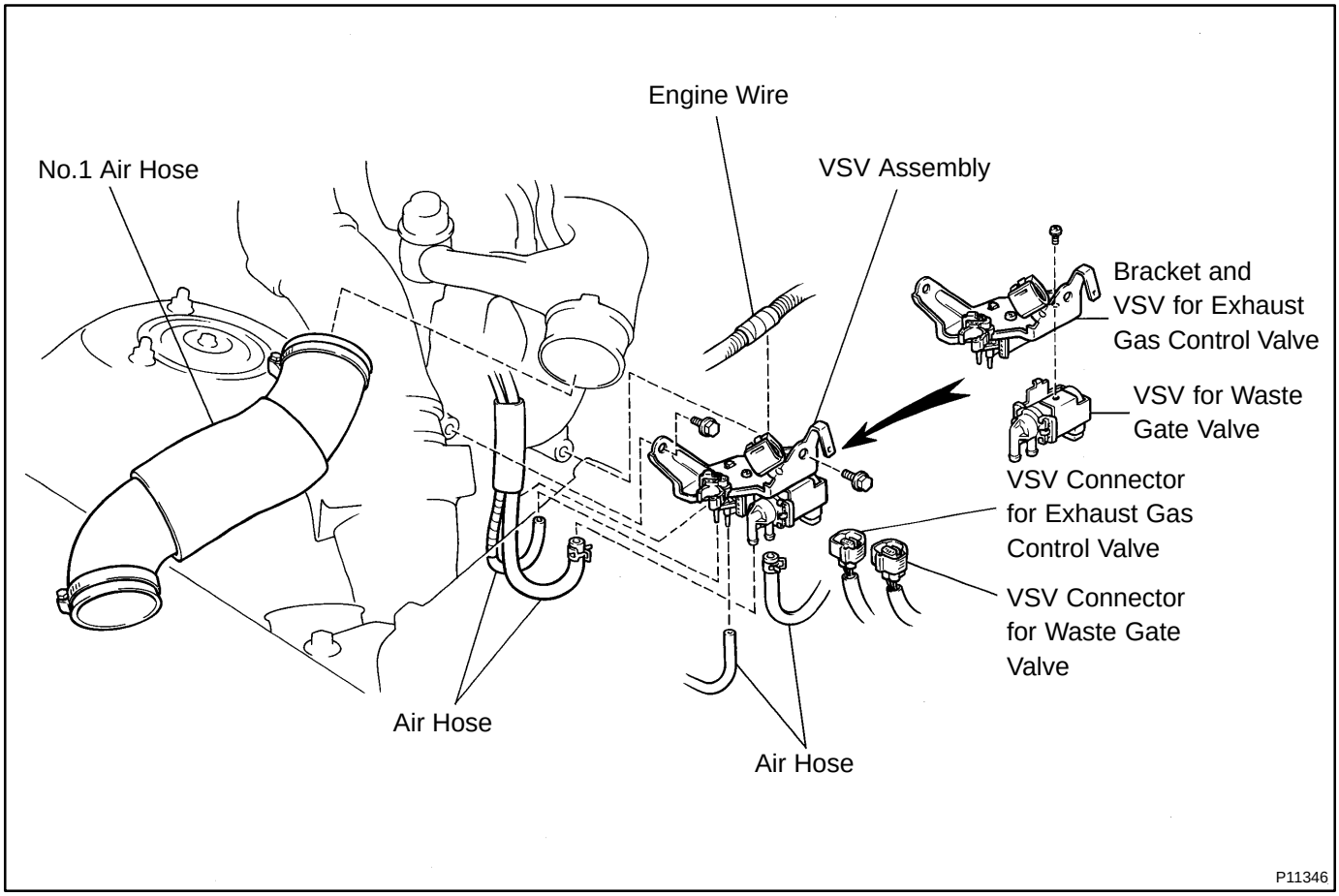

SF0HP-01

INSPECTION

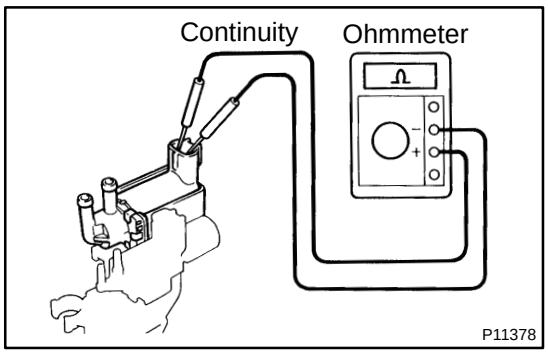

1. REMOVE VSV ASSEMBLY

2. INSPECT VSV FOR OPEN CIRCUIT

Using an ohmmeter, check that there is continuity between the terminals.

Resistance: 22 - 26 Ω at 20˚C (68˚F)

If there is no continuity, replace the VSV.

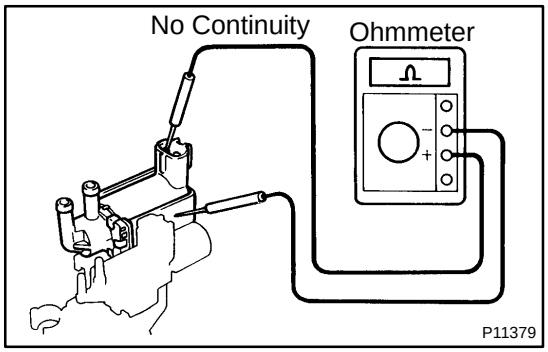

3. INSPECT VSV FOR GROUND

Using an ohmmeter, check that there is no continuity between each terminal and the body.

If there is continuity, replace the VSV.

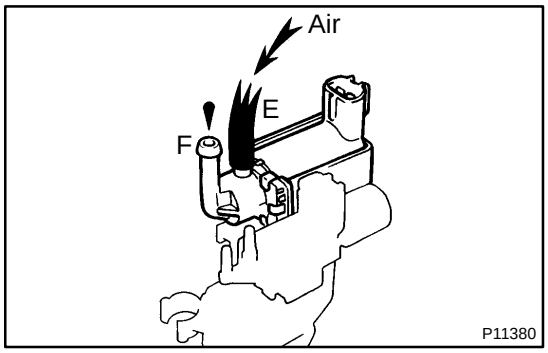

4. INSPECT VSV OPERATION

(a) Check that air does not flow from port E to F.

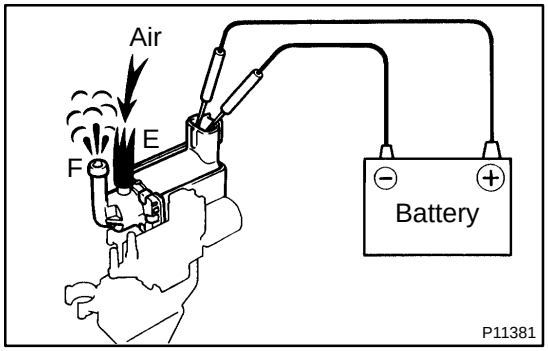

(b) Apply battery positive voltage across the terminals.

(c) Check that air flows from port E to F.

If operation is not as specified, replace the VSV.

5. REINSTALL VSV ASSEMBLY

VSV FOR EXHAUST GAS CONTROL VALVE

SF0HQ-01

COMPONENTS

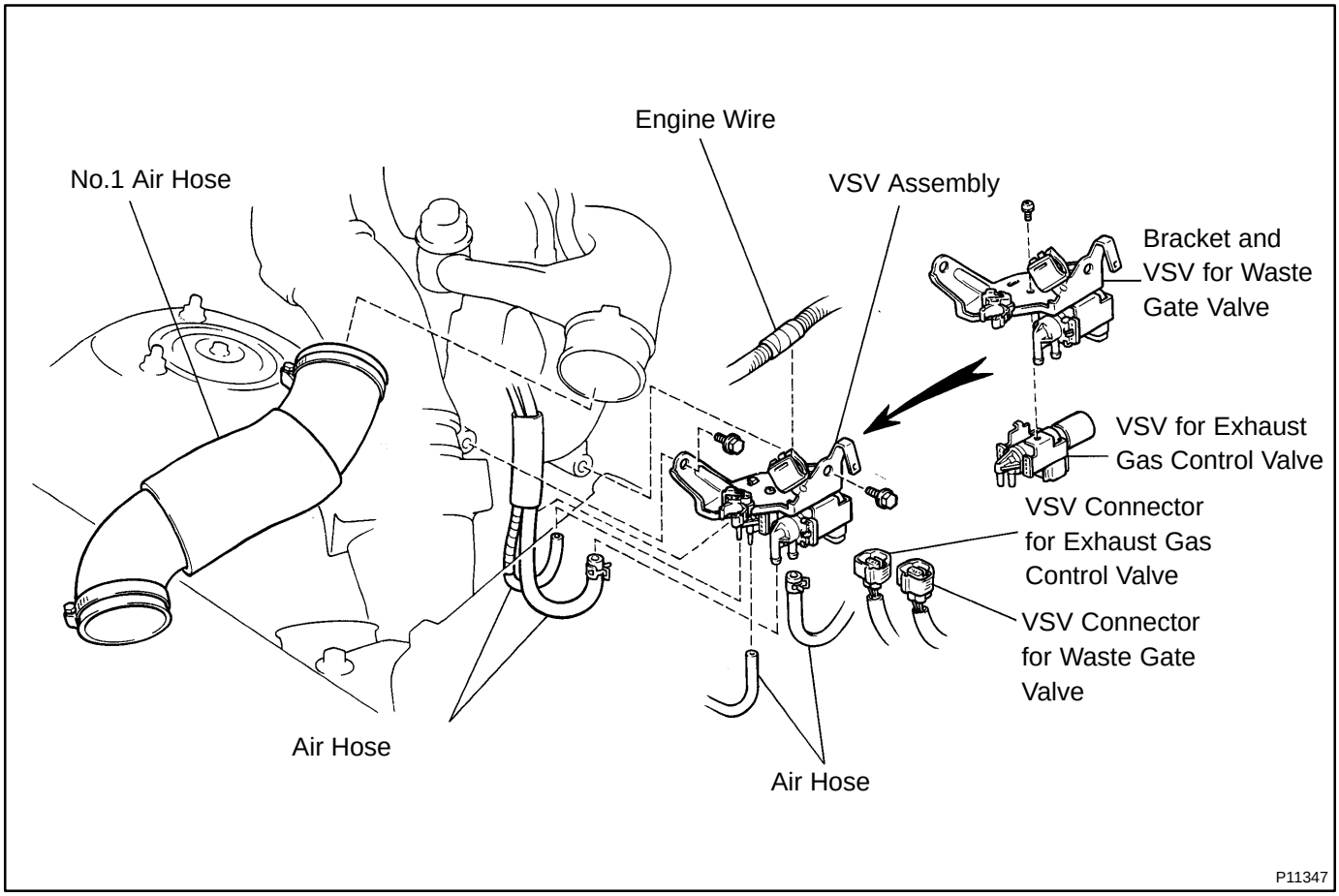

SF0HR-01

INSPECTION

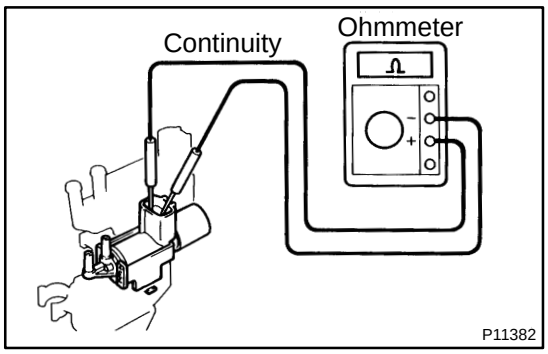

1. REMOVE VSV ASSEMBLY

2. INSPECT VSV FOR OPEN CIRCUIT

Using an ohmmeter, check that there is continuity between the terminals.

Resistance: 38.5 - 44.5 Ω at 20˚C (68˚F)

If there is no continuity, replace the VSV.

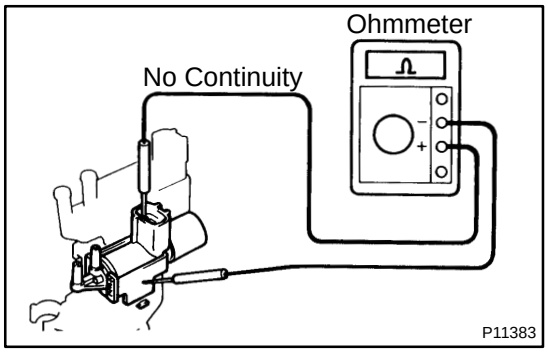

3. INSPECT VSV FOR GROUND

Using an ohmmeter, check that there is no continuity between each terminal and the body.

If there is continuity, replace the VSV.

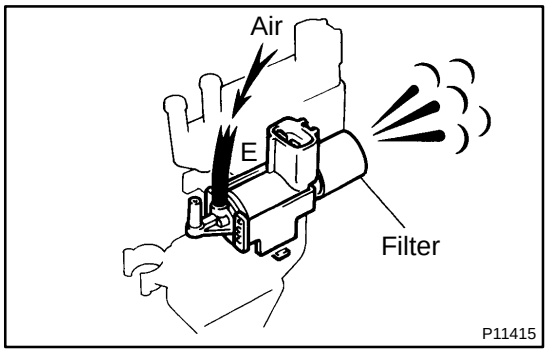

4. INSPECT VSV OPERATION

(a) Check that air flows from port E to the filter.

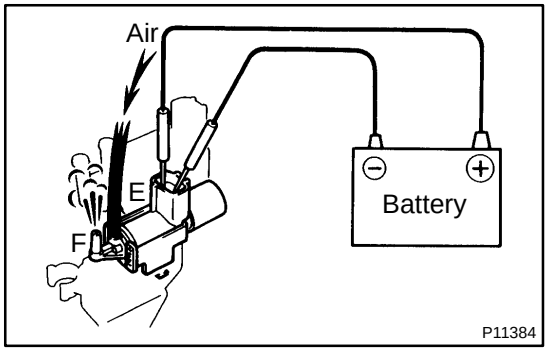

(b) Apply battery positive voltage across the terminals.

(c) Check that air flows from port E to F.

If operation is not as specified, replace the VSV.

5. REINSTALL VSV ASSEMBLY

VSV FOR EXHAUST BY-PASS VALVE

SF0HS-01

COMPONENTS

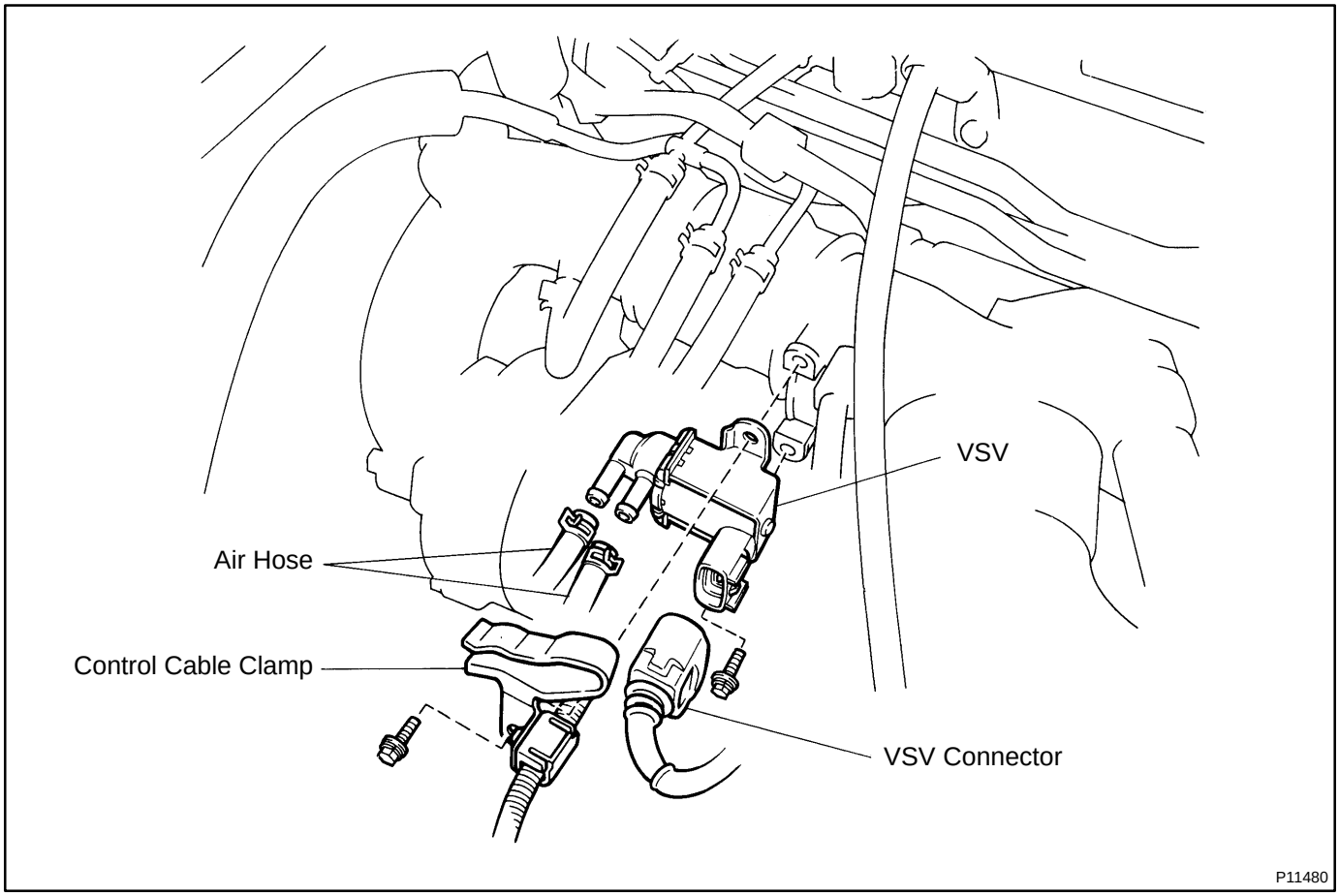

SF0HT-01

INSPECTION

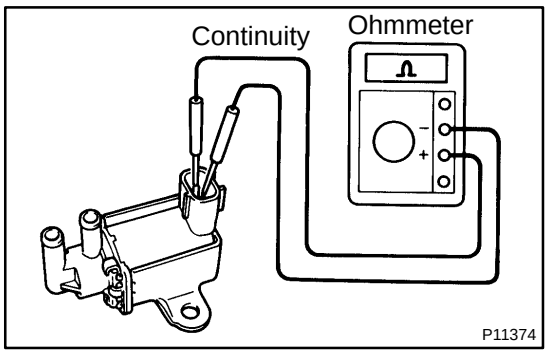

1. REMOVE VSV

2. INSPECT VSV FOR OPEN CIRCUIT

Using an ohmmeter, check that there is continuity between the terminals.

Resistance: 22 - 26 Ω at 20˚C (68˚F)

If there is no continuity, replace the VSV.

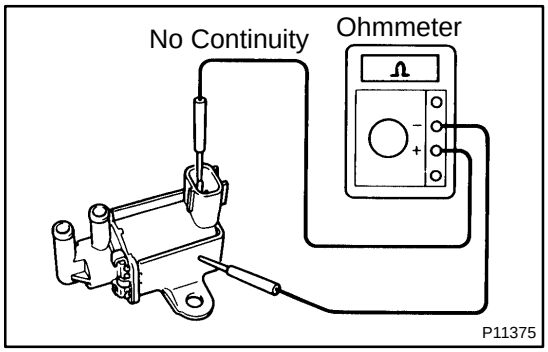

3. INSPECT VSV FOR GROUND

Using an ohmmeter, check that there is no continuity between each terminal and the body.

If there is continuity, replace the VSV.

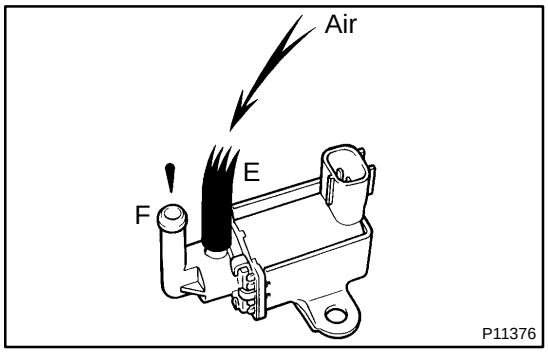

4. INSPECT VSV OPERATION

(a) Check that air does not flow from port E to F.

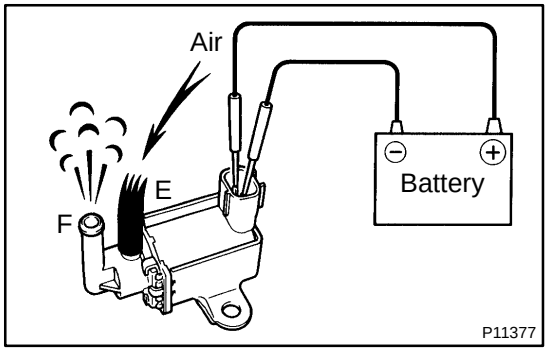

(b) Apply battery positive voltage across the terminals.

(c) Check that air flows from port E to F.

If operation is not as specified, replace the VSV.

5. REINSTALL VSV

VSV FOR EXHAUST GAS RECIRCULATION (EGR)

SF0I2-01

COMPONENTS

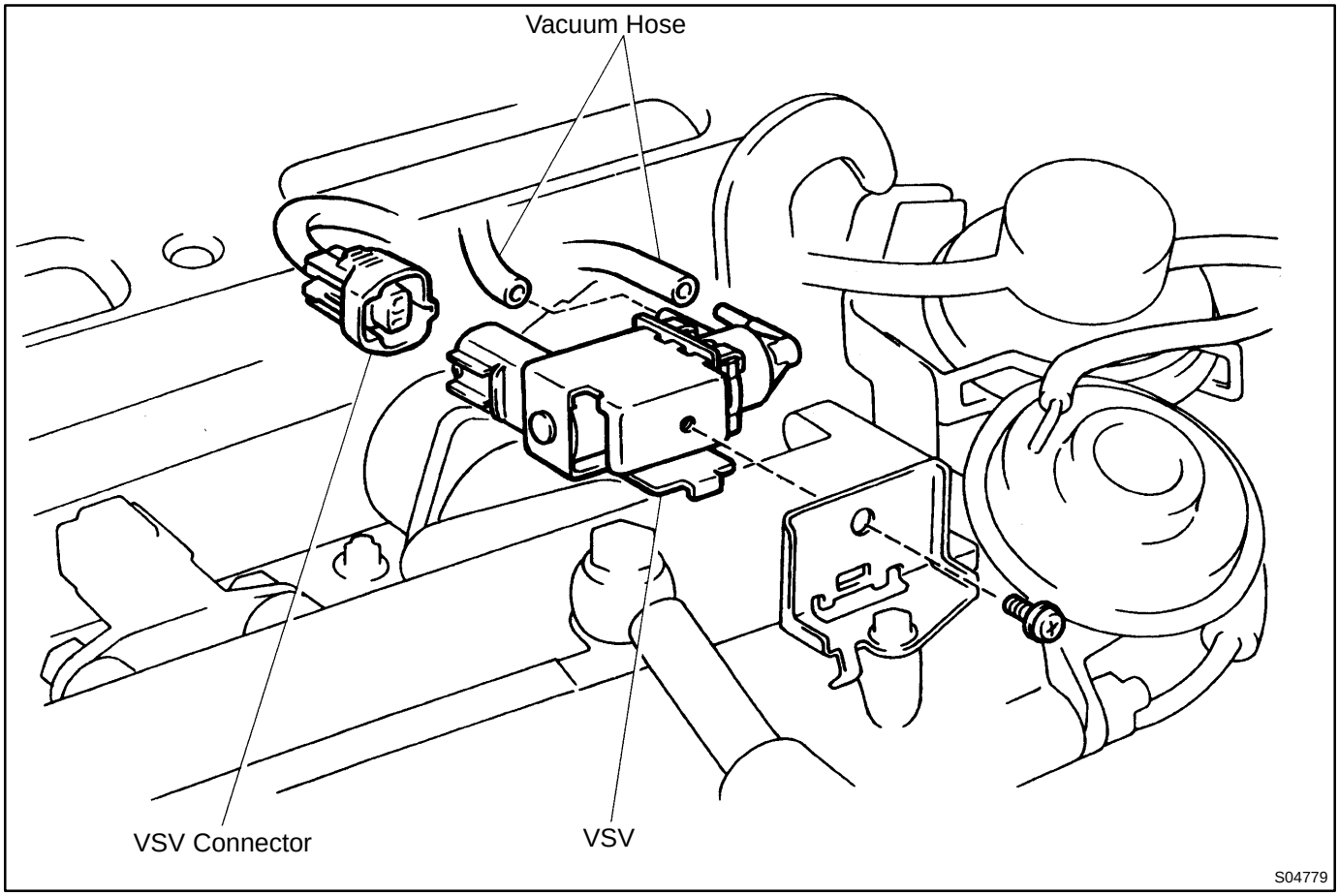

SF0I3-01

INSPECTION

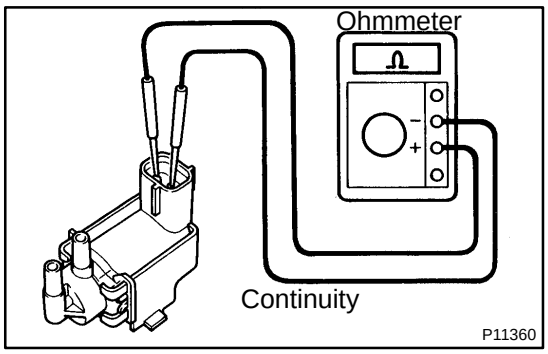

1. REMOVE VSV

2. INSPECT VSV FOR OPEN CIRCUIT

Using an ohmmeter, check that there is continuity between the terminals.

Resistance: 30 - 34 Ω at 20˚C (68˚F)

If there is no continuity, replace the VSV.

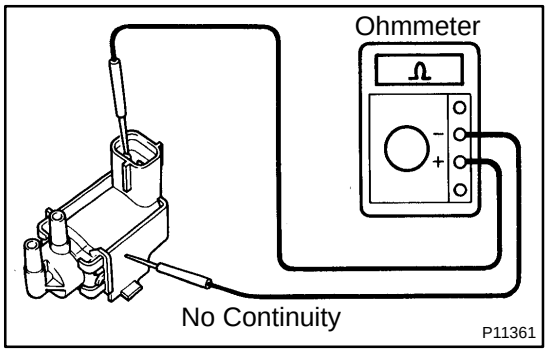

3. INSPECT VSV FOR GROUND

Using an ohmmeter, check that there is no continuity between each terminal and the body.

If there is continuity, replace the VSV.

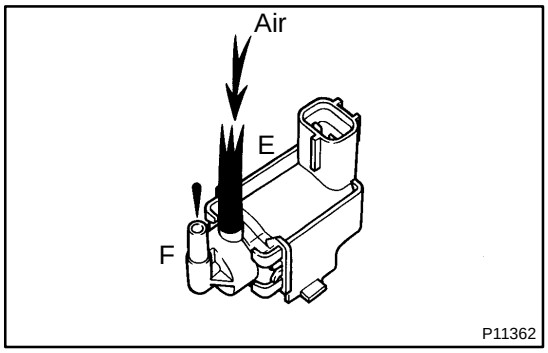

4. INSPECT VSV OPERATION

(a) Check that air does not flow from port E to F.

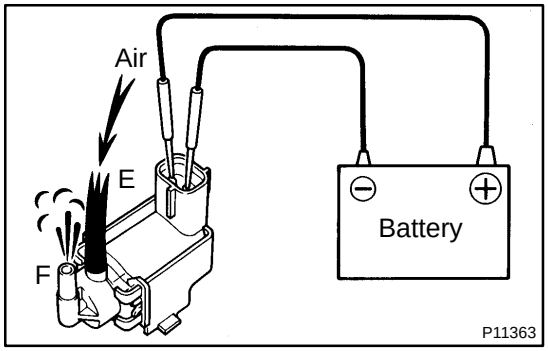

(b) Apply battery positive voltage across the terminals.

(c) Check that air flows from port E to F.

If operation is not as specified, replace the VSV.

5. REINSTALL VSV

VSV FOR EVAPORATIVE EMISSION (EVAP)

SF0HX-01

COMPONENTS

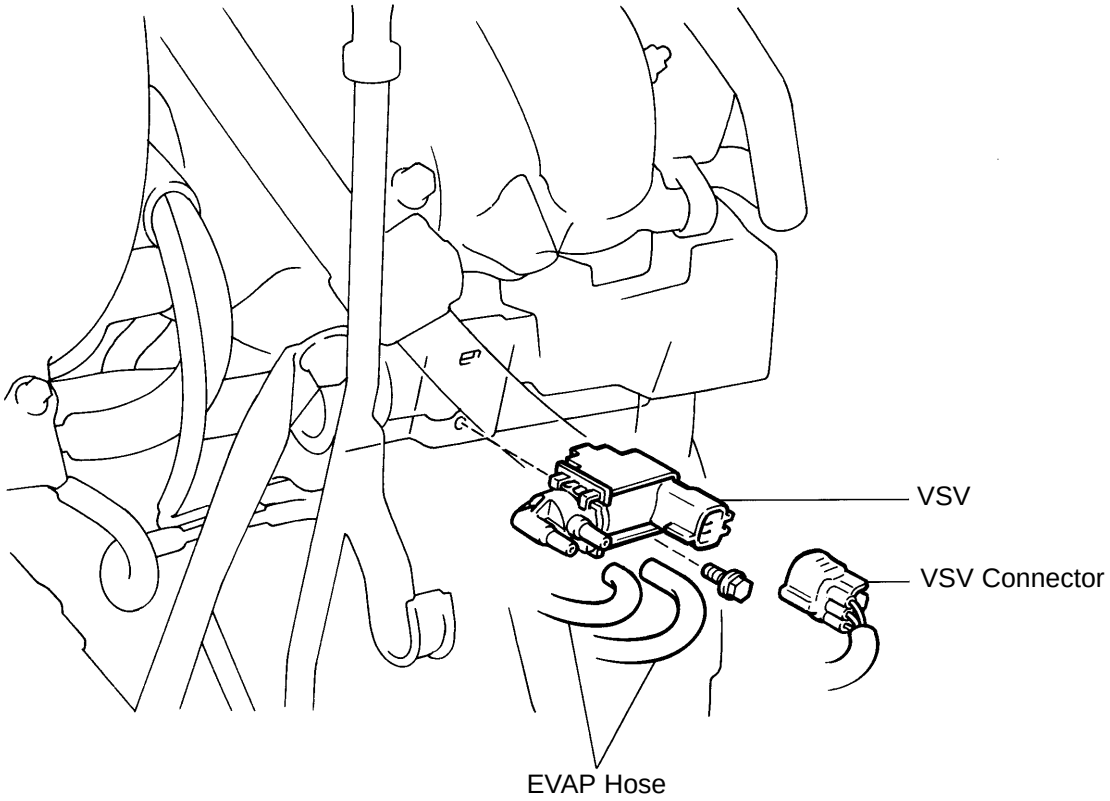

P11407

SF0HW-01

INSPECTION

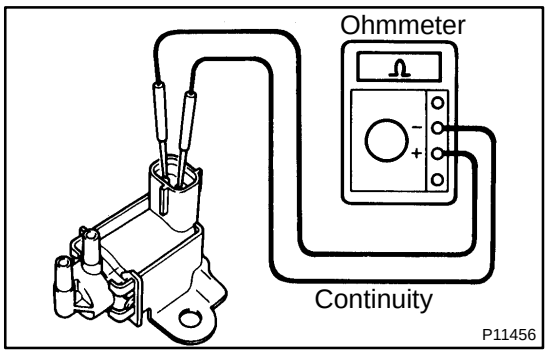

1. REMOVE VSV

2. INSPECT VSV FOR OPEN CIRCUIT

Using an ohmmeter, check that there is continuity between the terminals.

Resistance: 30 - 34 Ω at 20˚C (68˚F)

If there is no continuity, replace the VSV.

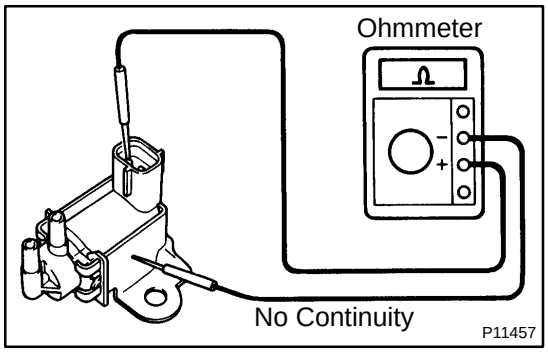

3. INSPECT VSV FOR GROUND

Using an ohmmeter, check that there is no continuity between each terminal and the body.

If there is continuity, replace the VSV.

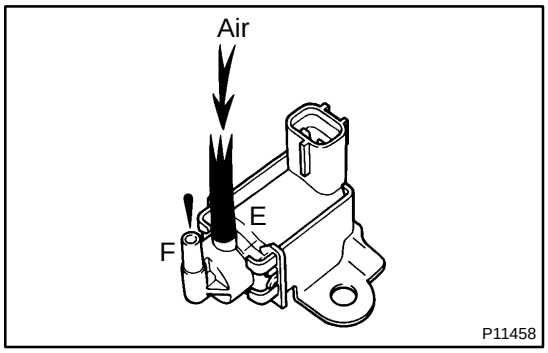

4. INSPECT VSV OPERATION

(a) Check that air does not flow from port E to F.

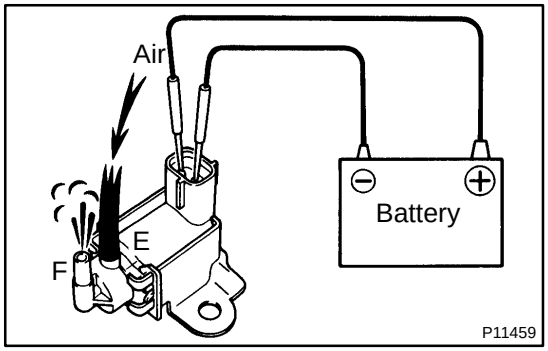

(b) Apply battery positive voltage across the terminals.

(c) Check that air flows from port E to F.

If operation is not as specified, replace the VSV.

5. REINSTALL VSV

ENGINE COOLANT TEMPERATURE (ECT) SENSOR

SF0HY-01

COMPONENTS

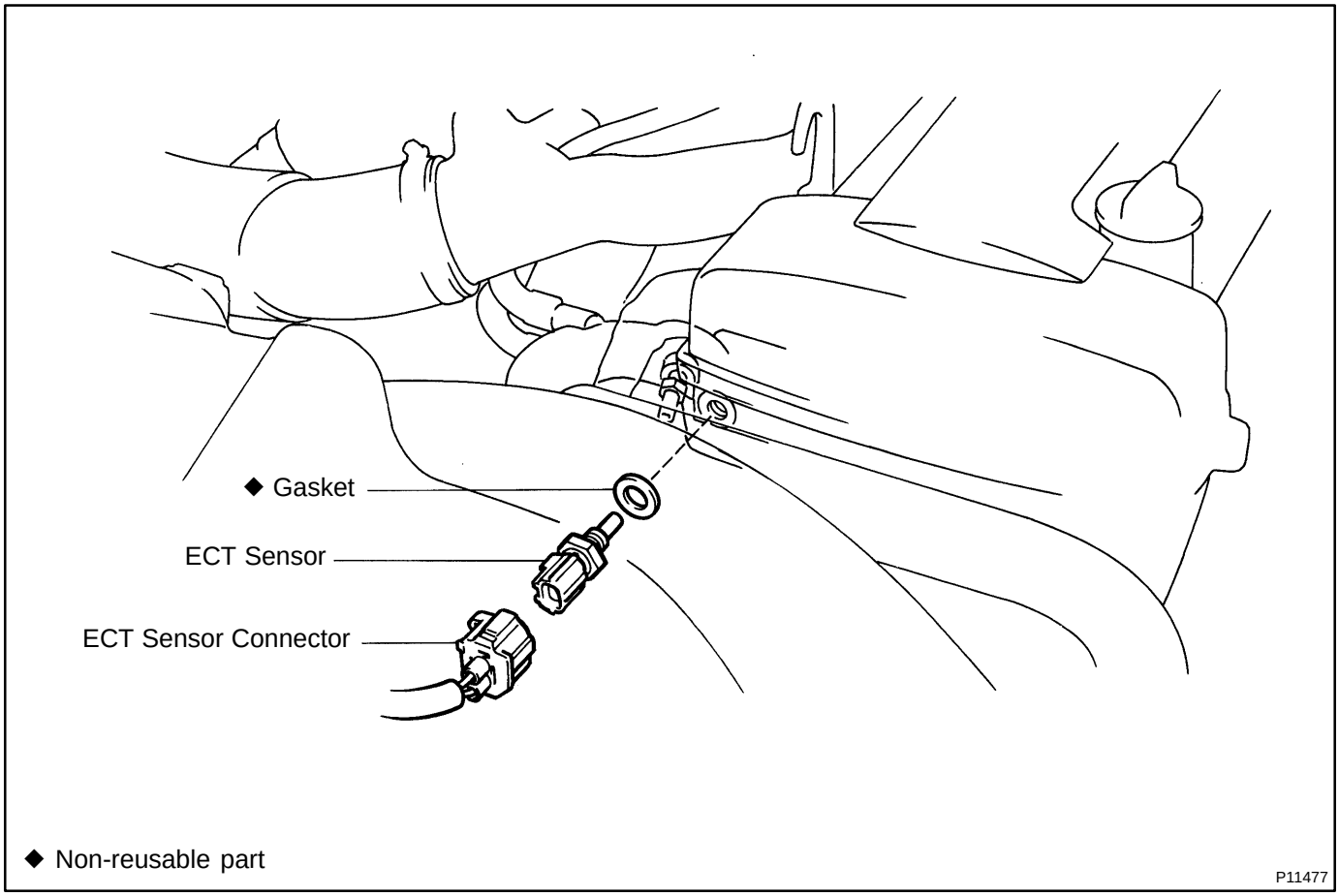

SF0HZ-01

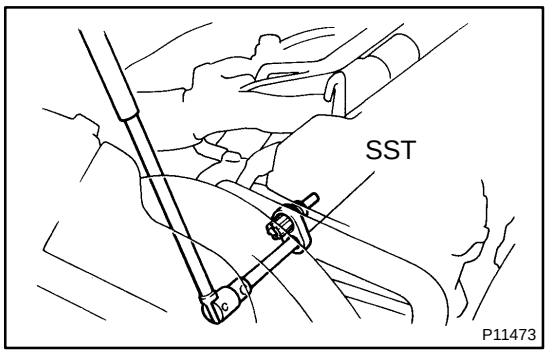

INSPECTION

1. DRAIN ENGINE COOLANT

2. REMOVE ECT SENSOR

(a) Disconnect the ECT sensor connector.

(b) Using SST, remove the ECT sensor and gasket.
SST 09205-76030

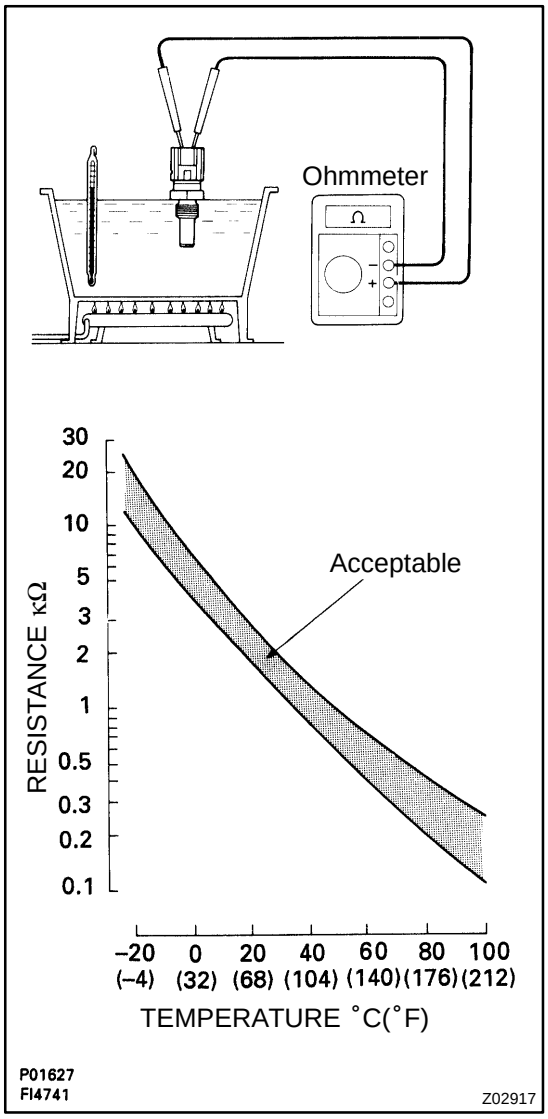

3. INSPECT ECT SENSOR

Using an ohmmeter, measure the resistance between the terminals.

Resistance: Refer to the graph

If the resistance is not as specified, replace the ECT sensor.

4. REINSTALL ECT SENSOR

(a) Install a new gasket to the ECT sensor.

(b) Using SST, install the ECT sensor.
SST 09205-76030

(c) Connect the ECT sensor connector.

5. REFILL WITH ENGINE COOLANT

KNOCK SENSOR

COMPONENTS

SF0I0-01

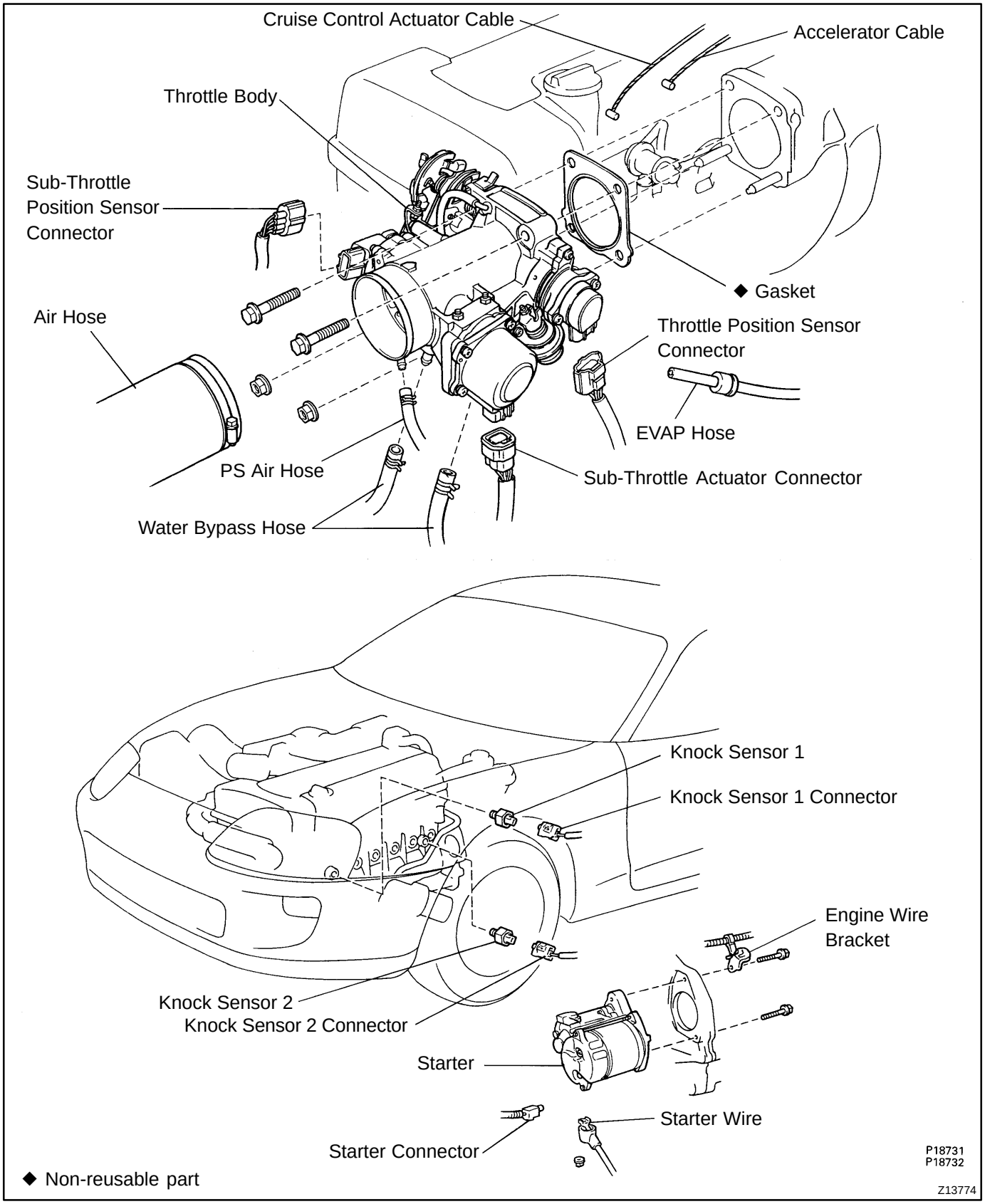

SF0I1-01

INSPECTION

1. REMOVE THROTTLE BODY
(See page SF-43)

2. REMOVE STARTER
(See page ST-4)

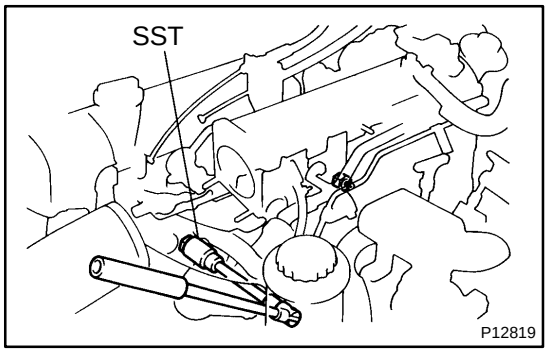

3. REMOVE KNOCK SENSORS

(a) Disconnect the knock sensor connector.

(b) Using SST, remove the knock sensor.
SST 09816-30010

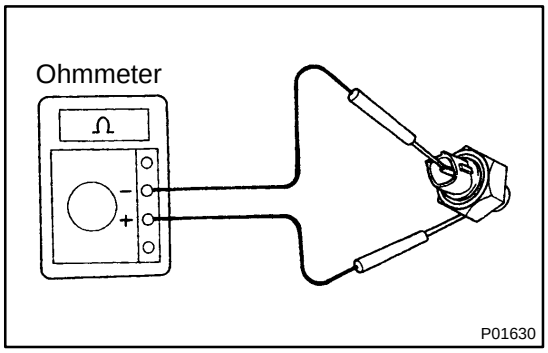

4. INSPECT KNOCK SENSORS

Using an ohmmeter, check that there is no continuity between the terminal and body.
If there is continuity, replace the sensor.

5. REINSTALL KNOCK SENSORS

(a) Using SST, install the knock sensor.
SST 09816-30010
Torque: 44 N·m (450 kgf·cm, 33 ft·lbf)

(b) Connect the knock sensor connector.

6. REINSTALL STARTER
(See page ST-15)

7. REINSTALL THROTTLE BODY
(See page SF-48)

EXHAUST GAS RECIRCULATION (EGR) GAS TEMPERATURE SENSOR

SF0HU-01

COMPONENTS

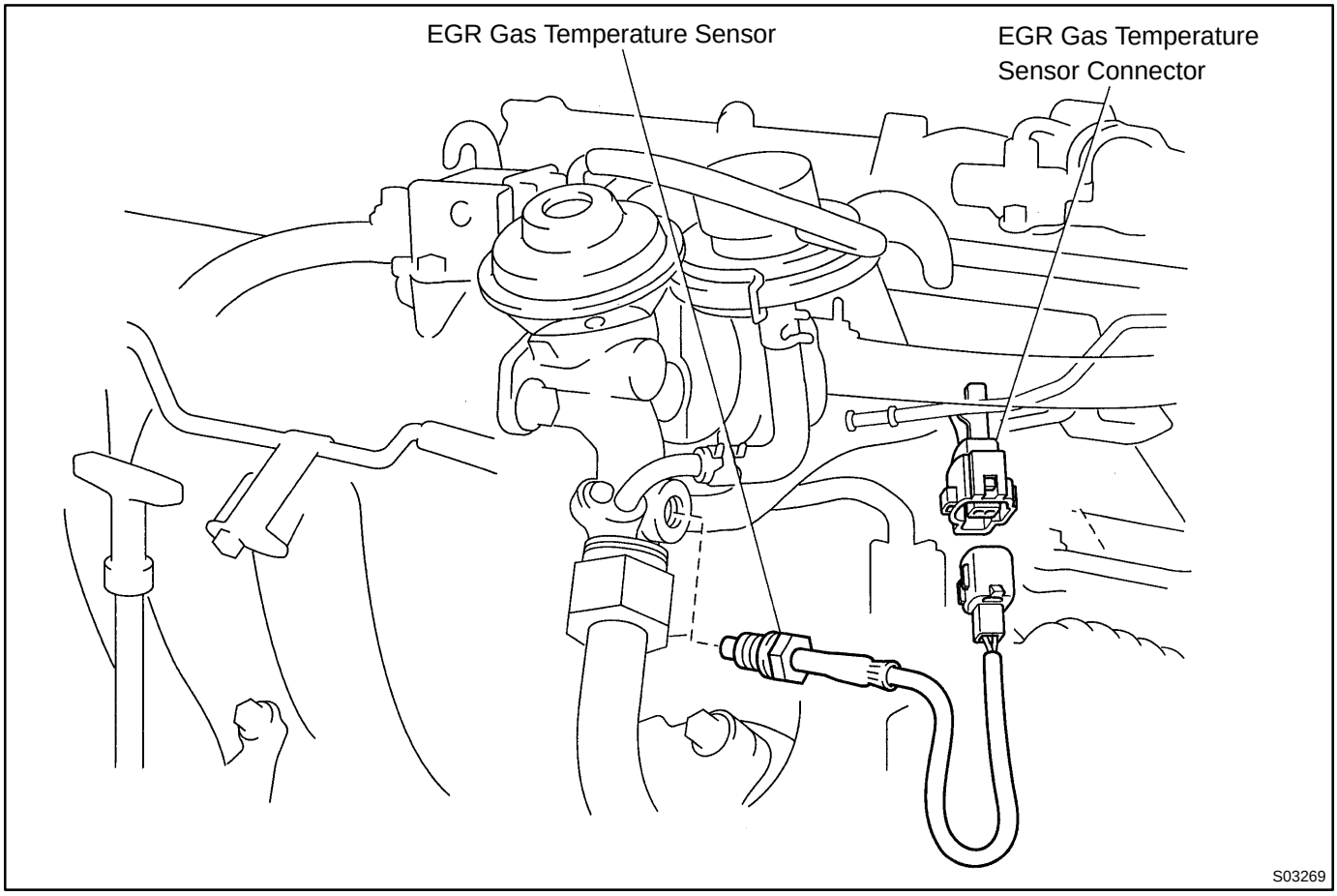

SF0HV-01

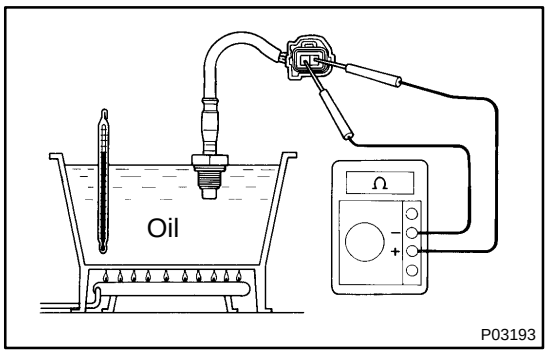

INSPECTION

1. REMOVE EGR GAS TEMPERATURE SENSOR

2. INSPECT EGR GAS TEMPERATURE SENSOR

Using an ohmmeter, measure the resistance between the terminals.

Resistance:

At 50˚C (122˚F)	64 - 97 kΩ
At 100˚C (212˚F)	11 - 16 kΩ
At 150˚C (302˚F)	2 - 4 kΩ

If the resistance is not as specified, replace the sensor.

Torque: 20 N·m (200 kgf·cm, 14 ft·lbf)

3. REINSTALL EGR GAS TEMPERATURE SENSOR

TURBO PRESSURE SENSOR

SF0I4-01

COMPONENTS

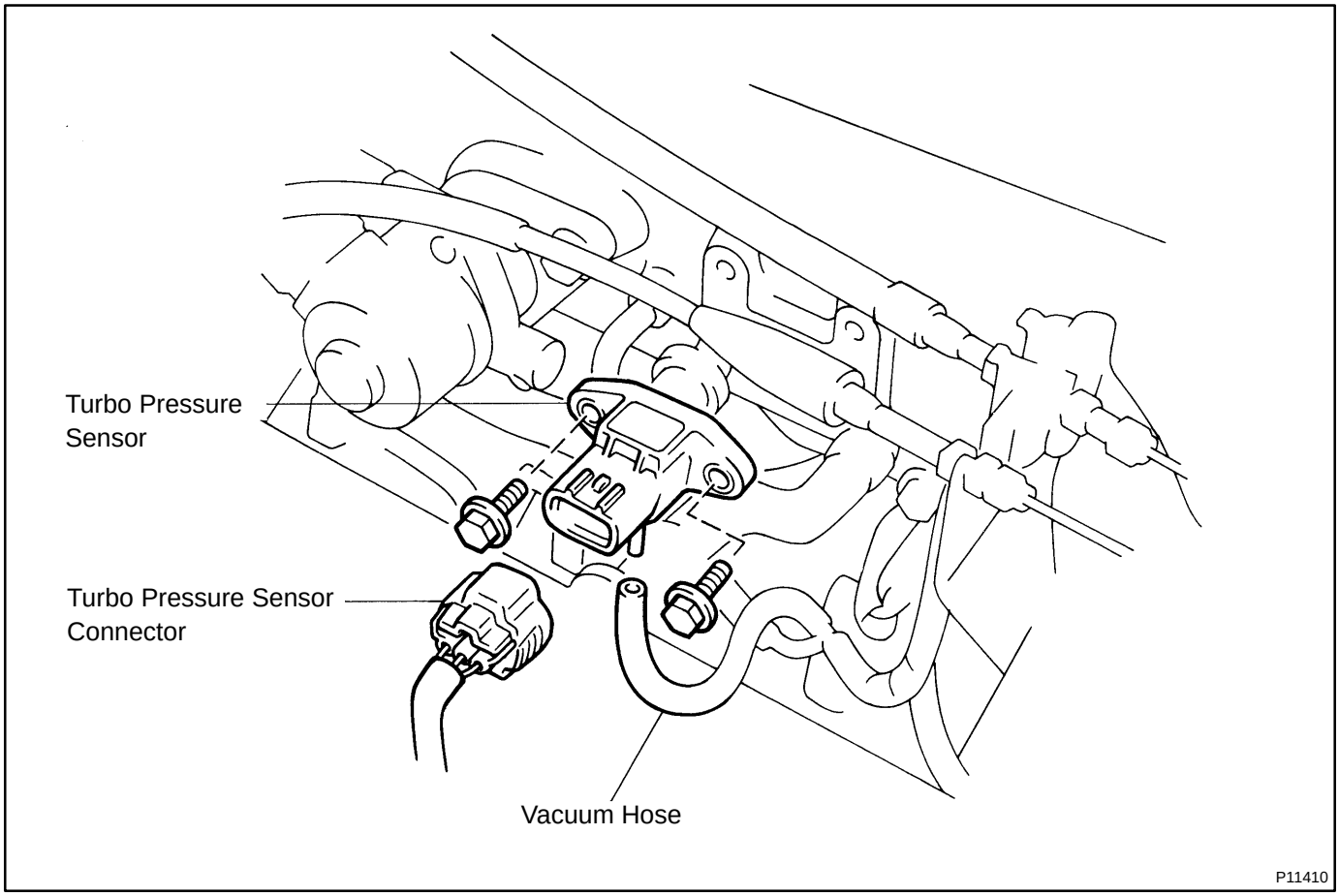

SF0I5-01

INSPECTION

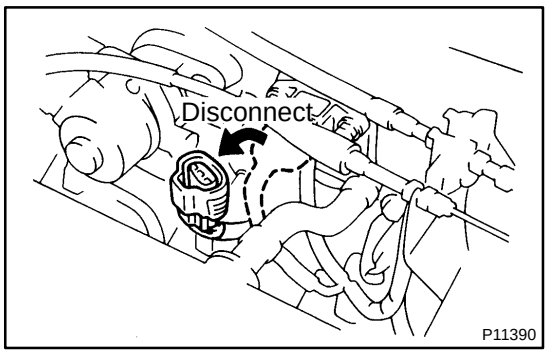

1. INSPECT POWER SOURCE VOLTAGE OF TURBO PRESSURE SENSOR

(a) Disconnect the turbo pressure sensor connector.

(b) Turn the ignition switch ON.

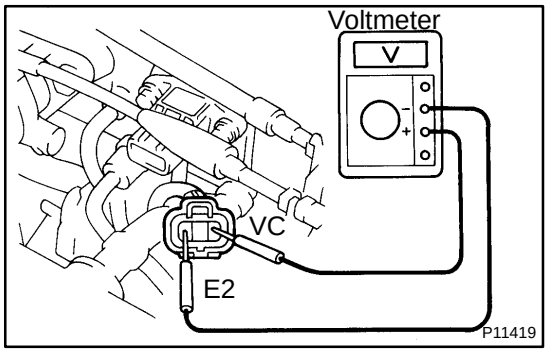

(c) Using a voltmeter, measure the voltage between connector terminals VC and E2 of the wiring harness side.
Voltage: 4.5 - 5.5 V

(d) Turn the ignition switch OFF.

(e) Reconnect the turbo pressure sensor connector.

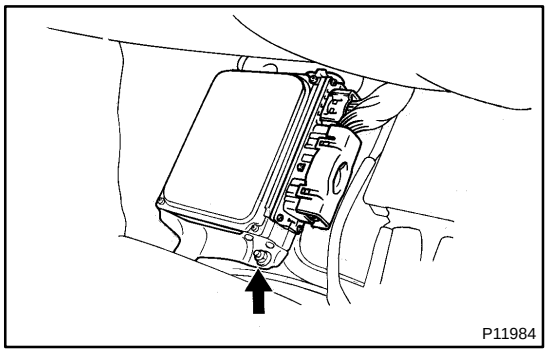

2. INSPECT SUPPLY POWER OF TURBO PRESSURE SENSOR

(a) Disconnect the ECM from the ECU bracket.
(See page SF-86)

(b) Install SST (check harness) between the ECM and wiring connectors.
(See page DI-164)
SST 09990-01000

(c) Turn the ignition switch ON.

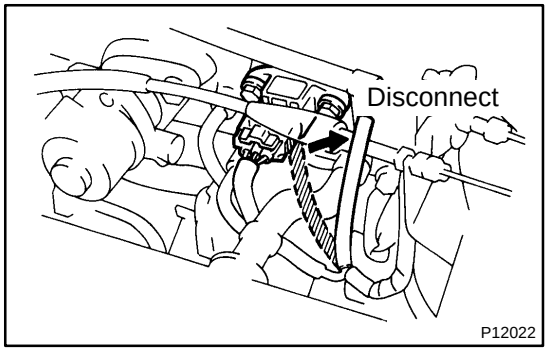

(d) Disconnect the vacuum hose from the turbo pressure sensor.

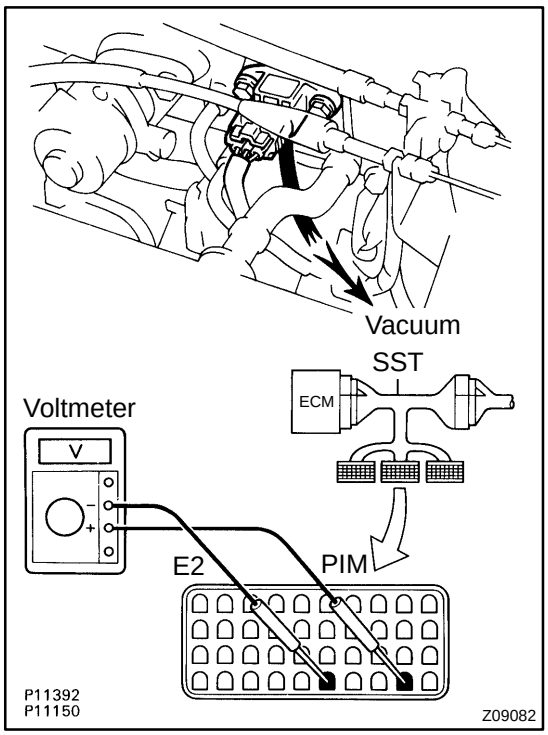

(e) Connect a voltmeter to terminals PIM and E2 of the ECM, and measure the output voltage under ambient atmospheric pressure.

(f) Apply vacuum to the turbo pressure sensor in 13.3 kPa (100 mmHg, 3.94 in.Hg) segments to 66.7 kPa (500 mmHg, 19.69 in.Hg).

(g) Measure the voltage drop from step (c) above for each segment.

Voltage drop:

Applied Vacuum kPa (mmHg in. Hg.)	13.3 (100 3.94)	26.7 (200 7.87)	40.0 (300 11.81)	53.3 (400 15.75)	66.7 (500 19.69)
Voltage drop V	0.15 - 0.35	0.4 - 0.6	0.65 - 0.85	0.9 - 1.1	1.15 - 1.35

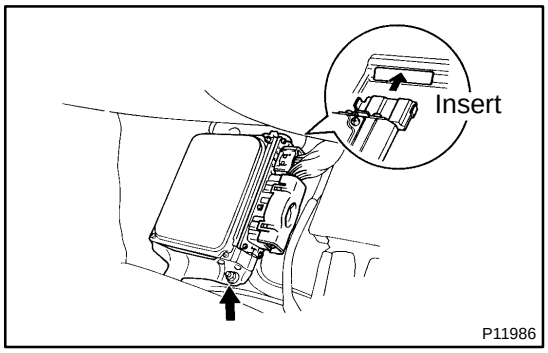

(h) Remove the SST.
SST 09990-01000

(i) Reinstall the ECM. (See page SF-86)

(j) Reconnect the vacuum hose to the turbo pressure sensor.

HEATED OXYGEN SENSOR

COMPONENTS

SF0I6-01

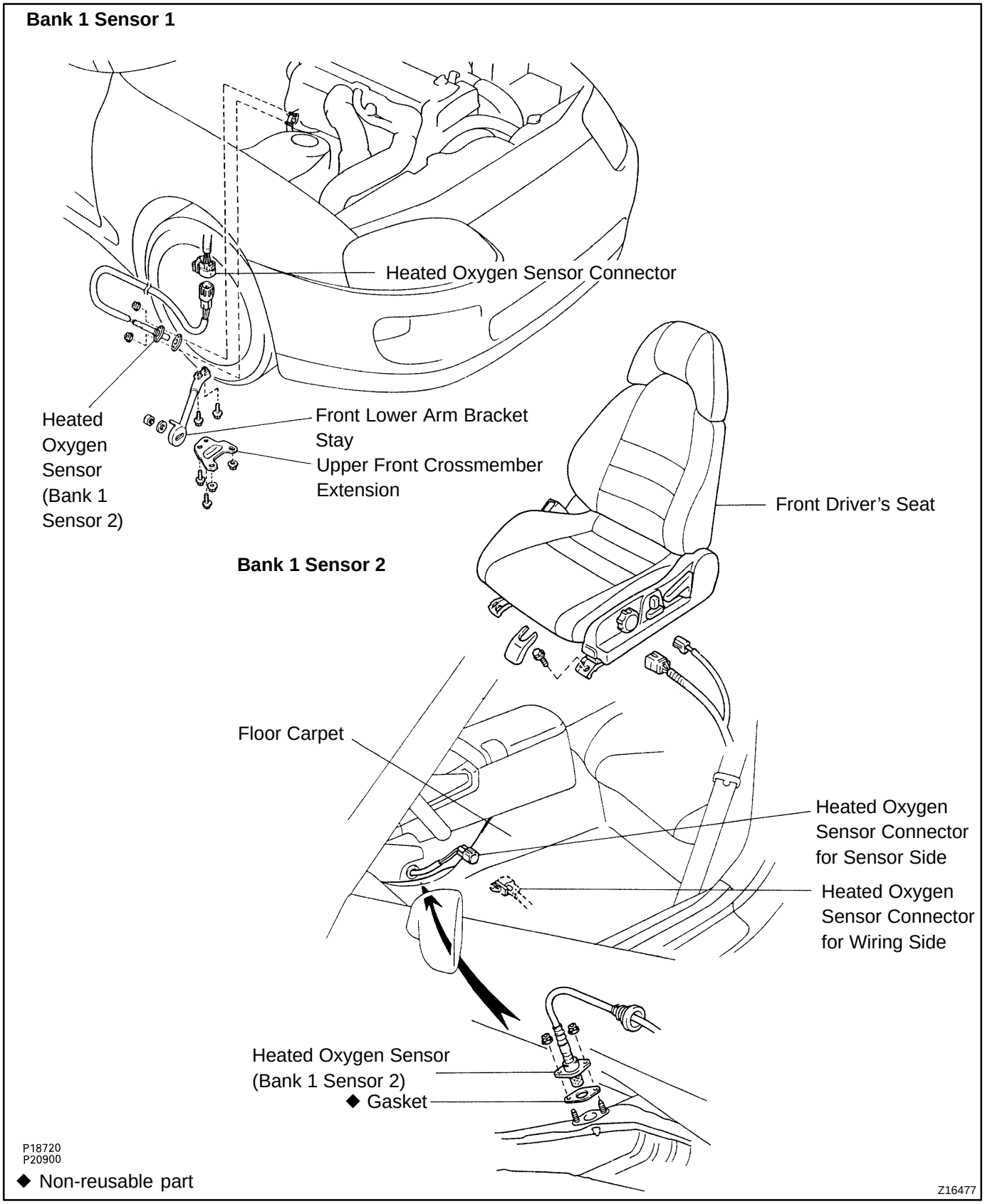

SF0I7-01

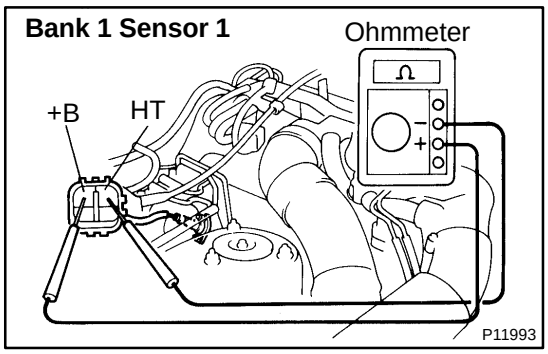

INSPECTION

1. INSPECT HEATER RESISTANCE OF HEATED OXYGEN SENSOR (BANK 1 SENSOR 1)

(a) Disconnect the oxygen sensor connector.

(b) Using an ohmmeter, measure the resistance between the terminals +B and HT.

Resistance: 11 - 16 Ω at 20˚C (68˚F)

If the resistance is not as specified, replace the sensor.

Torque: 20 N·m (200 kgf·cm, 14 ft·lbf)

(c) Reconnect the oxygen sensor connector.

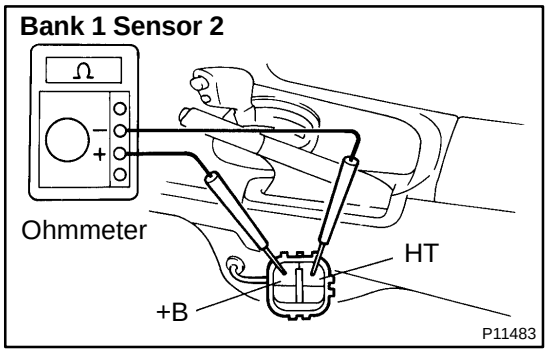

2. INSPECT HEATER RESISTANCE OF HEATED OXYGEN SENSOR (BANK 1 SENSOR 2)

(a) Remove the driver's seat.

(b) Take out the console box side of the floor carpet.

(c) Disconnect the oxygen sensor connector.

(d) Using an ohmmeter, measure the resistance between the terminals +B and HT.

Resistance: 11 - 16 Ω at 20˚C (68˚F)

If the resistance is not as specified, replace the sensor.

Torque: 20 N·m (200 kgf·cm, 14 ft·lbf)

(e) Reconnect the oxygen sensor connector.

(f) Reinstall the floor carpet.

(g) Reinstall the driver's seat.

FUEL PUMP ECU

COMPONENTS

SF0I8-01

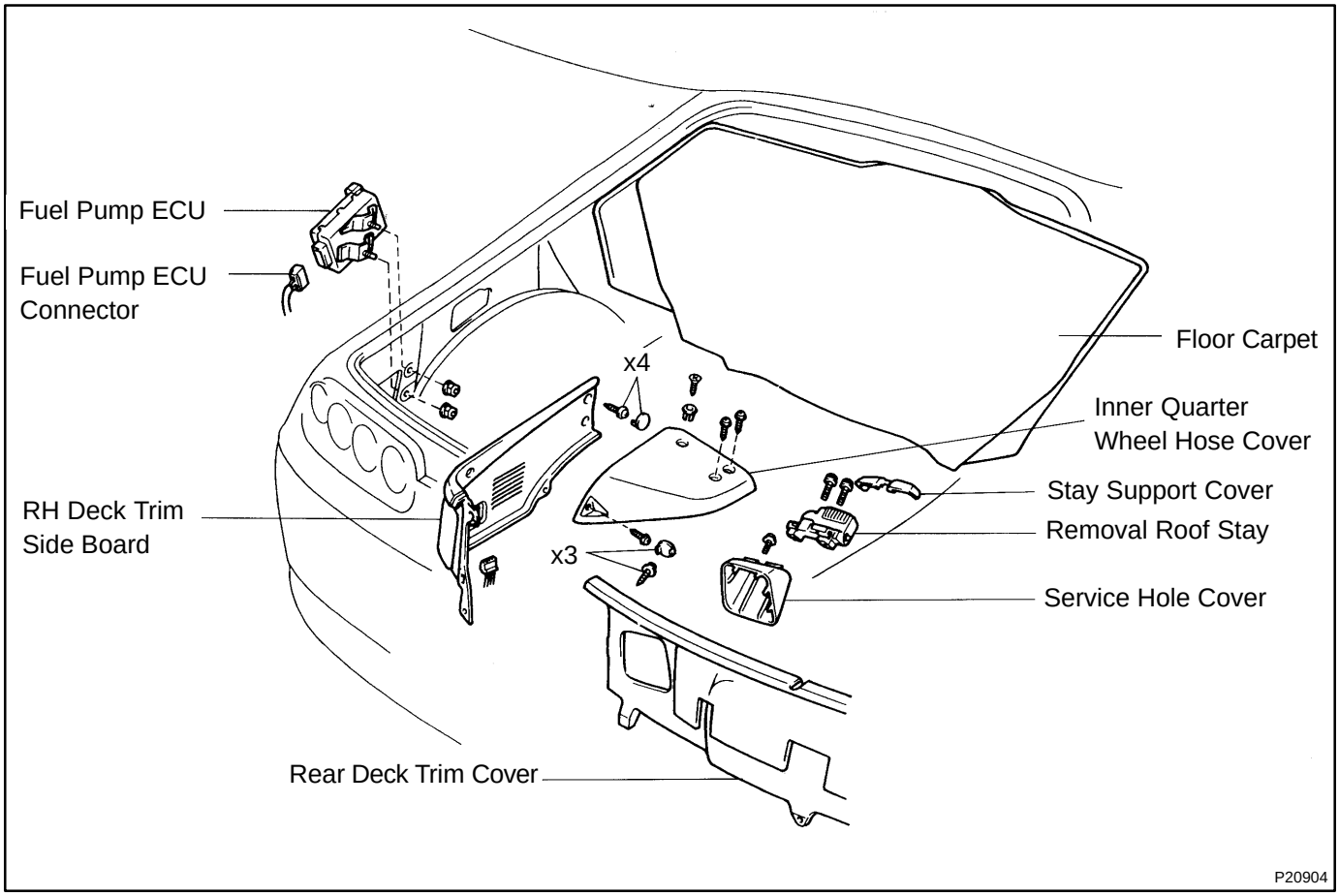

ENGINE CONTROL MODULE (ECM)

SF0IA-01

COMPONENTS

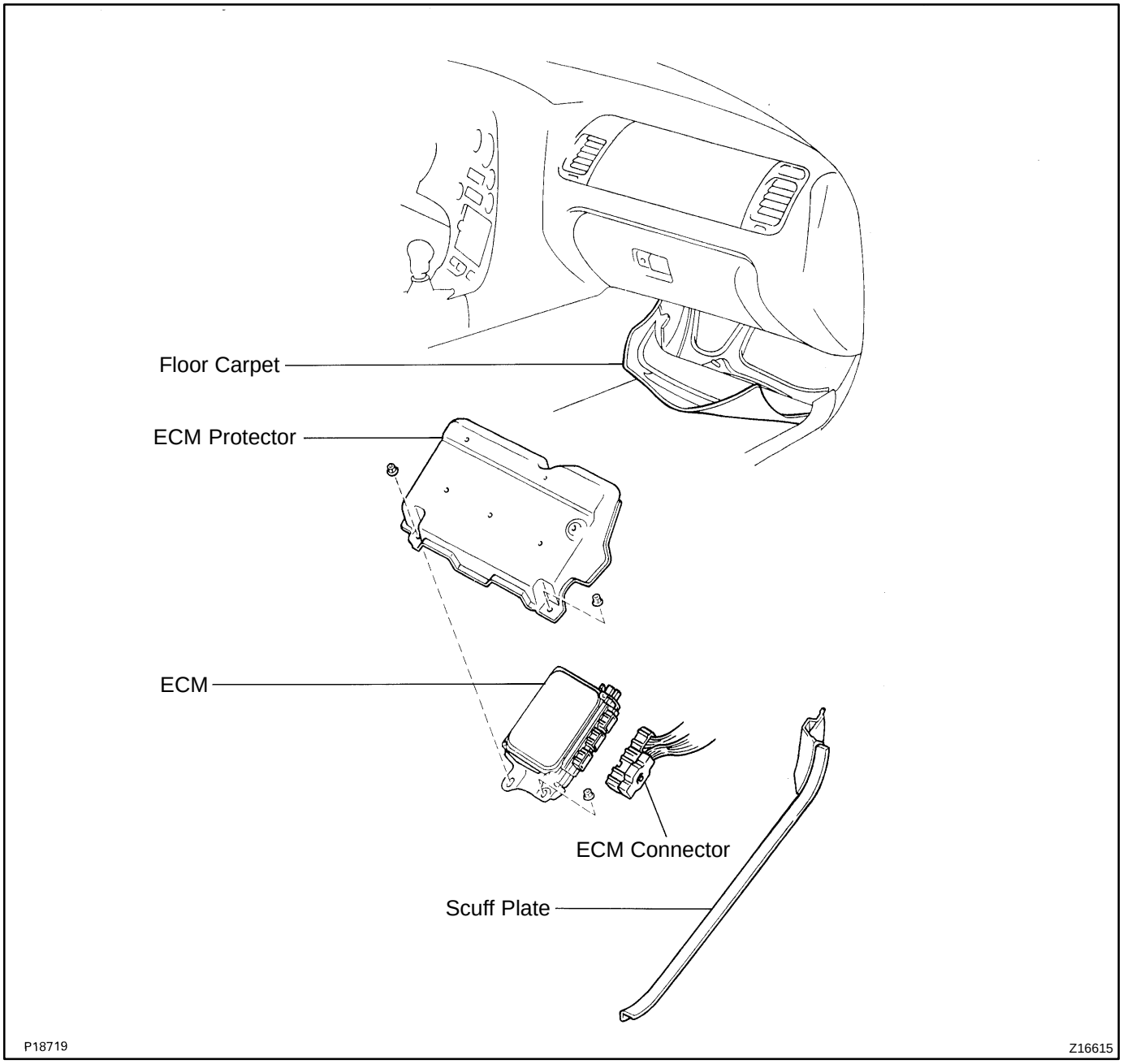

SF0IB-01

INSPECTION

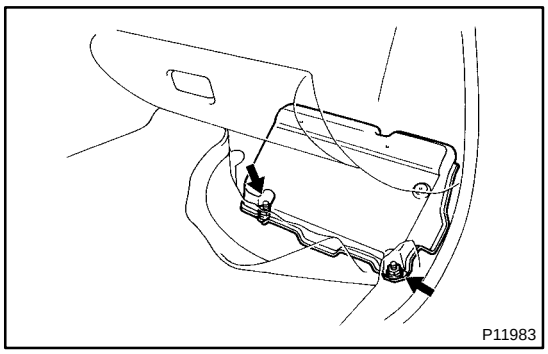

1. DISCONNECT NEGATIVE (-) TERMINAL CABLE FROM BATTERY

2. REMOVE SCUFF PLATE

3. REMOVE ECM PROTECTOR

(a) Take out the front side of the floor carpet.

(b) Remove the 2 nuts and ECM protector.

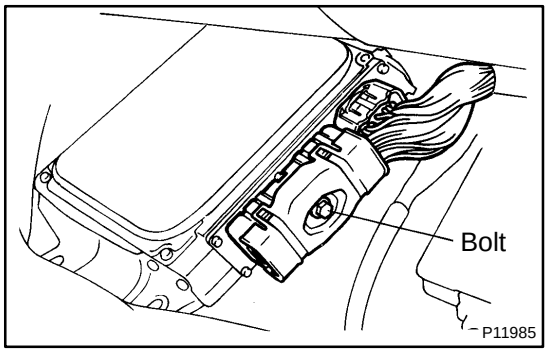

4. REMOVE ECM

(a) Remove the nut, and disconnect the ECM from the floor panel.

(b) Fully loosen the bolt and disconnect the 2 ECM connectors, and remove the ECM.

5. INSPECT ECM

(See page DI-164)

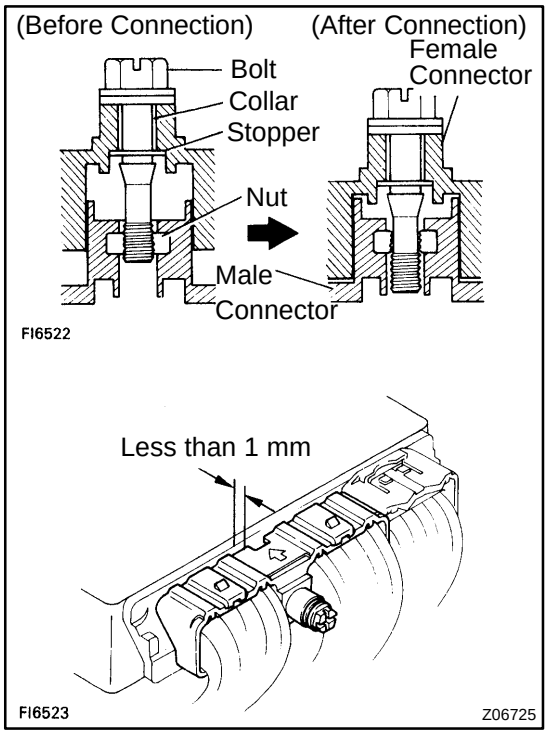

6. REINSTALL ECM

(a) Connect the 2 ECM connectors.

- Match the male connector correctly with the female connector, then press them together.
- Tighten the bolt.
  Make sure the connector is completely connected by tightening the bolt until there is a clearance of less than 1 mm (0.04 in.) between the bottom of the male connector and the end of the female connector.

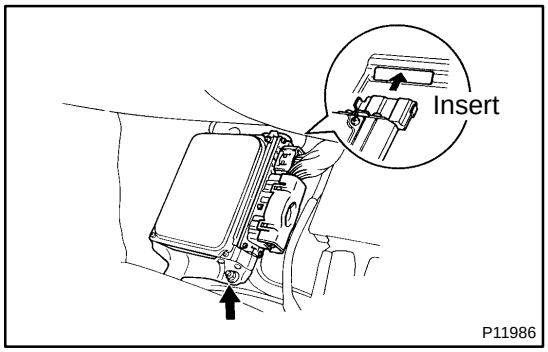

(b) Install the ECM with the nut.

7. REINSTALL ECM PROTECTOR

8. REINSTALL SCUFF PLATE

9. RECONNECT NEGATIVE (-) TERMINAL CABLE TO BATTERY

FUEL CUT RPM

SF0IC-02

INSPECTION

1. WARM UP ENGINE

Allow the engine to warm up to normal operating temperature.

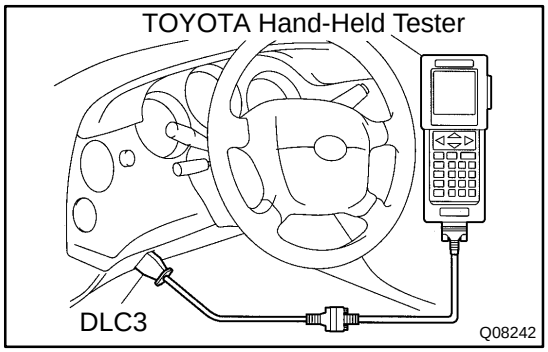

2. CONNECT TOYOTA HAND-HELD TESTER OR OBDII SCAN TOOL

(a) Connect the TOYOTA hand-held tester or OBDII scan tool to the DLC3.

(b) Please refer to the TOYOTA hand-held tester or OBDII scan tool operator's manual for further details.

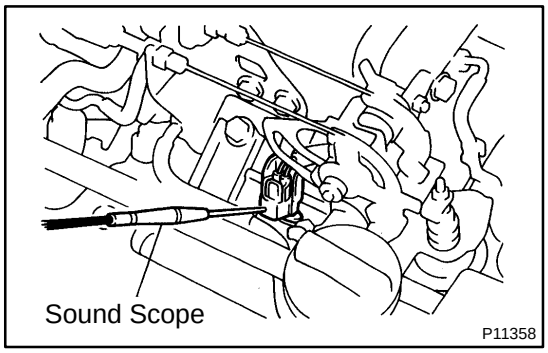

3. INSPECT FUEL CUTOFF OPERATION

(a) Increase the engine speed to at least 3,000 rpm.

(b) Check for injector operating noise.

(c) Check that when the throttle lever is released, injector operation noise stops momentarily and then resumes.

HINT:

Measure with the A/C OFF.

Fuel return speed:
1,400 rpm
(Vehicle speed less than 25 km/h (16 mph), with brake OFF)

4. DISCONNECT TOYOTA HAND-HELD TESTER OR OBDII SCAN TOOL