Manual Transmission Workshop Manual Y16M–D

CONTENTS

Title	Section
GENERAL INFORMATION	00
TRANSMISSION/TRANSAXLE	05

© 2003 Mazda Motor Corporation
PRINTED IN U.S.A., MARCH 2003
Form No. 1774–1U–03C
Part No. 9999–95–T15M–D

FOREWORD

This manual explains the disassembly, inspection, repair, and reassembly procedures for the above-indicated manual transmission.

In order to do these procedures safely, quickly, and correctly, you must first read this manual and any other relevant service materials carefully.

The information in this manual is current up to March, 2003. Any changes that occur after that time will not be reflected in this particular manual. Therefore, the contents of this manual may not exactly match the mechanism that you are currently servicing.

Mazda Motor Corporation
HIROSHIMA, JAPAN

GENERAL INFORMATION 00-00

00–00 GENERAL INFORMATION

HOW TO USE THIS MANUAL 00–00–1
Range of Topics **00–00–1**
Service Procedure. **00–00–2**
Symbols **00–00–4**
Advisory Messages. **00–00–4**
UNITS 00–00–5
Conversion to SI Units (Système International d'Unités) **00–00–5**
Rounding Off. **00–00–5**
Upper and Lower Limits **00–00–5**
FUNDAMENTAL PROCEDURES 00–00–6
Preparation of Tools and Measuring Equipment. **00–00–6**
Special Service Tools **00–00–6**
Disassembly **00–00–6**
Inspection During Removal, Disassembly. **00–00–6**
Arrangement of Parts. **00–00–7**
Cleaning of Parts **00–00–7**
Reassembly **00–00–7**
Adjustment **00–00–8**
Rubber Parts and Tubing. **00–00–8**
Hose Clamps **00–00–8**
Torque Formulas **00–00–8**
Vise **00–00–9**
ELECTRICAL SYSTEM. 00–00–9
Connectors. **00–00–9**
SAE STANDARDS 00–00–11
ABBREVIATIONS 00–00–11

HOW TO USE THIS MANUAL

CHU000000001M01

Range of Topics

- This manual contains procedures for performing all required service operations. The procedures are divided into the following five basic operations:
  — Removal/Installation
  — Disassembly/Assembly
  — Replacement
  — Inspection
  — Adjustment
- Simple operations which can be performed easily just by looking at the vehicle (i.e., removal/installation of parts, jacking, vehicle lifting, cleaning of parts, and visual inspection) have been omitted.

Service Procedure
Inspection, adjustment

- Inspection and adjustment procedures are divided into steps. Important points regarding the location and contents of the procedures are explained in detail and shown in the illustrations.

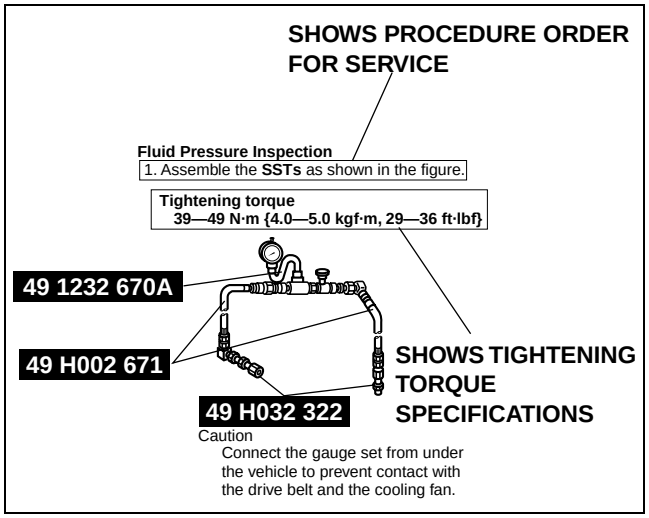

WGIWXX0009E

Repair procedure

1. Most repair operations begin with an overview illustration. It identifies the components, shows how the parts fit together, and describes visual part inspection. However, only removal/installation procedures that need to be performed methodically have written instructions.
2. Expendable parts, tightening torques, and symbols for oil, grease, and sealant are shown in the overview illustration. In addition, symbols indicating parts requiring the use of special service tools or equivalent are also shown.
3. Procedure steps are numbered and the part that is the main point of that procedure is shown in the illustration with the corresponding number. Occasionally, there are important points or additional information concerning a procedure. Refer to this information when servicing the related part.

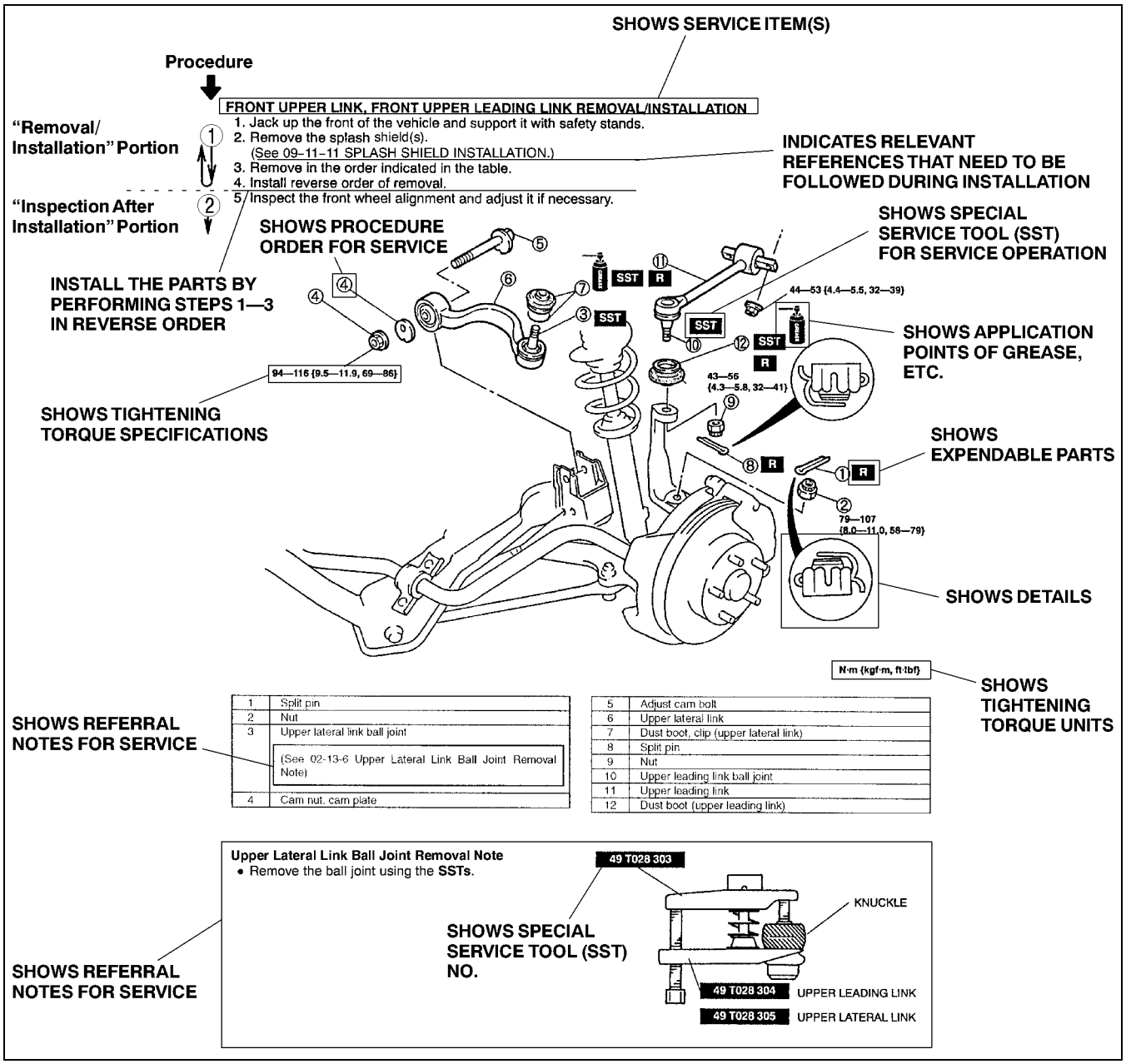

YLU000WA0

Symbols

- There are eight symbols indicating oil, grease, fluids, sealant, and the use of **SST** or equivalent. These symbols show application points or use of these materials during service.

Symbol	Meaning	Kind
OIL	Apply oil	New appropriate engine oil or gear oil
BRAKE FLUID	Apply brake fluid	New appropriate brake fluid
ATF	Apply automatic transaxle/ transmission fluid	New appropriate automatic transaxle/ transmission fluid
GREASE	Apply grease	Appropriate grease
SEALANT	Apply sealant	Appropriate sealant
P	Apply petroleum jelly	Appropriate petroleum jelly
R	Replace part	O-ring, gasket, etc.
SST	Use SST or equivalent	Appropriate tools

Advisory Messages

- You will find several **Warnings**, **Cautions**, **Notes**, **Specifications** and **Upper and Lower Limits** in this manual.

Warning

- A Warning indicates a situation in which serious injury or death could result if the warning is ignored.

Caution

- A Caution indicates a situation in which damage to the vehicle or parts could result if the caution is ignored.

Note

- A Note provides added information that will help you to complete a particular procedure.

Specification

- The values indicate the allowable range when performing inspections or adjustments.

Upper and lower limits

- The values indicate the upper and lower limits that must not be exceeded when performing inspections or adjustments.

UNITS

CHU000000002M01

Electric current	A (ampere)
Electric power	W (watt)
Electric resistance	ohm
Electric voltage	V (volt)
Length	mm (millimeter)
	in (inch)
Negative pressure	kPa (kilo pascal)
	mmHg (millimeters of mercury)
	inHg (inches of mercury)
Positive pressure	kPa (kilo pascal)
	kgf/cm^2 (kilogram force per square centimeter)
	psi (pounds per square inch)
Number of revolutions	rpm (revolutions per minute)
Torque	N·m (Newton meter)
	kgf·m (kilogram force meter)
	kgf·cm (kilogram force centimeter)
	ft·lbf (foot pound force)
	in·lbf (inch pound force)
Volume	L (liter)
	US qt (U.S. quart)
	Imp qt (Imperial quart)
	ml (milliliter)
	cc (cubic centimeter)
	cu in (cubic inch)
	fl oz (fluid ounce)
Weight	g (gram)
	oz (ounce)

Conversion to SI Units (Système International d'Unités)

- All numerical values in this manual are based on SI units. Numbers shown in conventional units are converted from these values.

Rounding Off

- Converted values are rounded off to the same number of places as the SI unit value. For example, if the SI unit value is 17.2 and the value after conversion is 37.84, the converted value will be rounded off to 37.8.

Upper and Lower Limits

- When the data indicates upper and lower limits, the converted values are rounded down if the SI unit value is an upper limit and rounded up if the SI unit value is a lower limit. Therefore, converted values for the same SI unit value may differ after conversion. For example, consider 2.7 kgf/cm^2 in the following specifications:

  210—260 kPa {2.1—2.7 kgf/cm^2, 30—38 psi}
  270—310 kPa {2.7—3.2 kgf/cm^2, 39—45 psi}

- The actual converted values for 2.7 kgf/cm^2 are 264 kPa and 38.4 psi. In the first specification, 2.7 is used as an upper limit, so the converted values are rounded down to 260 and 38. In the second specification, 2.7 is used as a lower limit, so the converted values are rounded up to 270 and 39.

FUNDAMENTAL PROCEDURES

CHU000000004M01

Preparation of Tools and Measuring Equipment

- Be sure that all necessary tools and measuring equipment are available before starting any work.

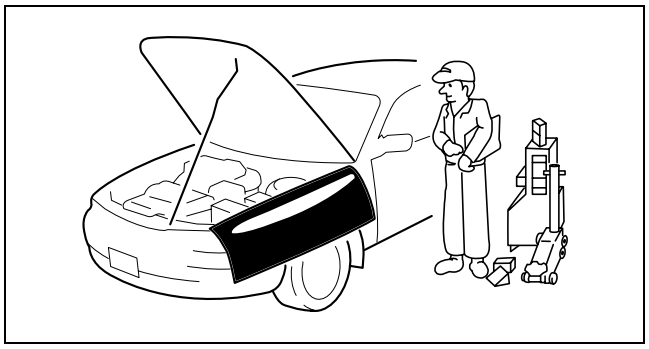

CHU0014W003

Special Service Tools

- Use special service tools or equivalent when they are required.

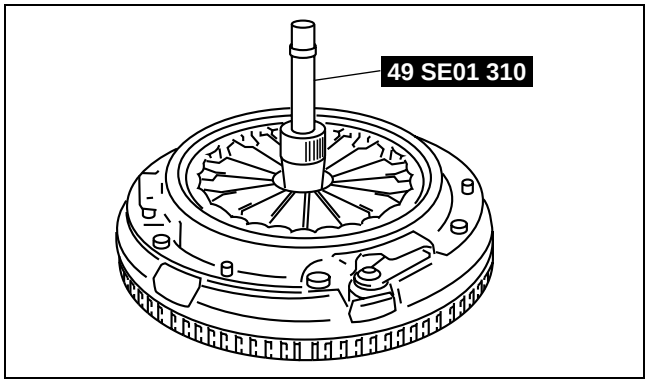

WGIWXX0024E

Disassembly

- If the disassembly procedure is complex, requiring many parts to be disassembled, all parts should be marked in a place that will not affect their performance or external appearance and identified so that reassembly can be performed easily and efficiently.

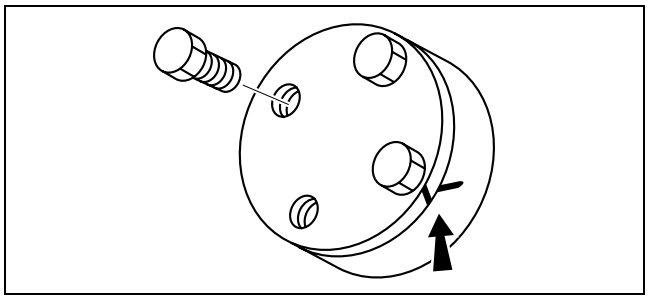

WGIWXX0027E

Inspection During Removal, Disassembly

- When removed, each part should be carefully inspected for malfunction, deformation, damage and other problems.

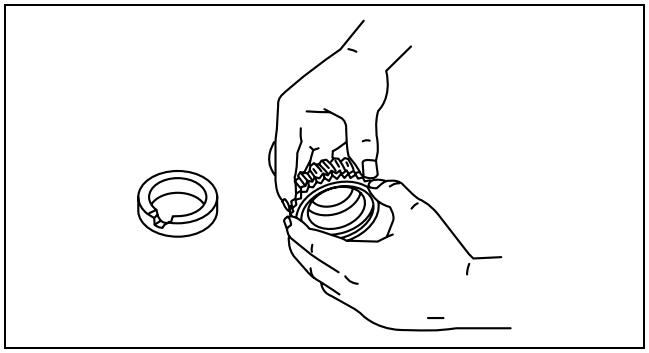

WGIWXX0028E

Arrangement of Parts

- All disassembled parts should be carefully arranged for reassembly.
- Be sure to separate or otherwise identify the parts to be replaced from those that will be reused.

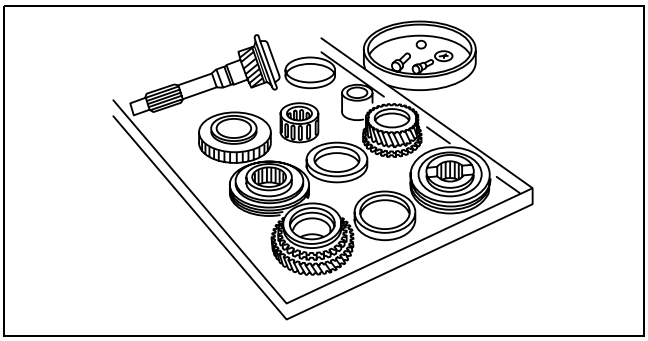

WGIWXX0029E

Cleaning of Parts

- All parts to be reused should be carefully and thoroughly cleaned in the appropriate method.

  Warning
  - **Using compressed air can cause dirt and other particles to fly out causing injury to the eyes. Wear protective eye wear whenever using compressed air.**

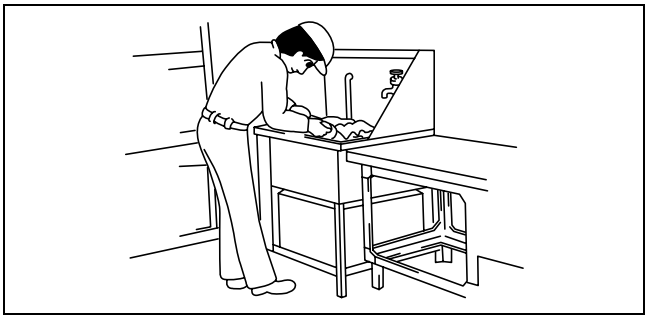

WGIWXX0030E

Reassembly

- Standard values, such as torques and certain adjustments, must be strictly observed in the reassembly of all parts.
- If removed, the following parts should be replaced with new ones:
  — Oil seals
  — Gaskets
  — O-rings
  — Lock washers
  — Cotter pins
  — Nylon nuts

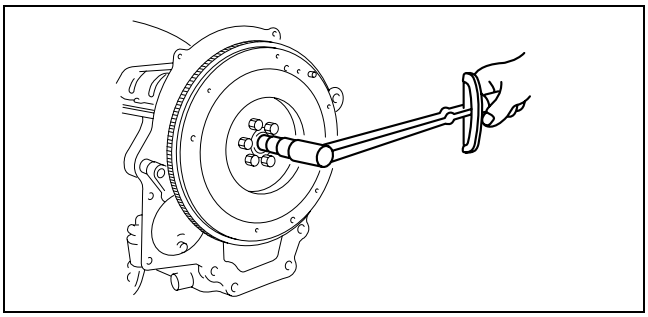

WGIWXX0031E

- Depending on location:
  — Sealant and gaskets, or both, should be applied to specified locations. When sealant is applied, parts should be installed before sealant hardens to prevent leakage.
  — Oil should be applied to the moving components of parts.
  — Specified oil or grease should be applied at the prescribed locations (such as oil seals) before reassembly.

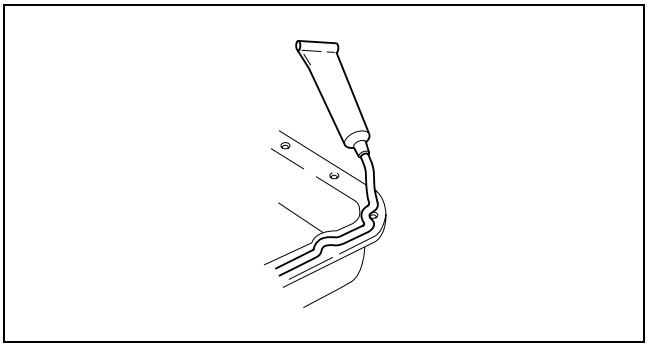

CHU0014W006

Adjustment

- Use suitable gauges and testers when making adjustments.

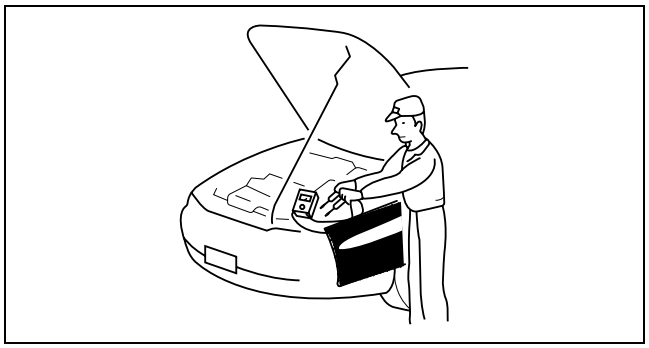

CHU0014W005

Rubber Parts and Tubing

- Prevent gasoline or oil from getting on rubber parts or tubing.

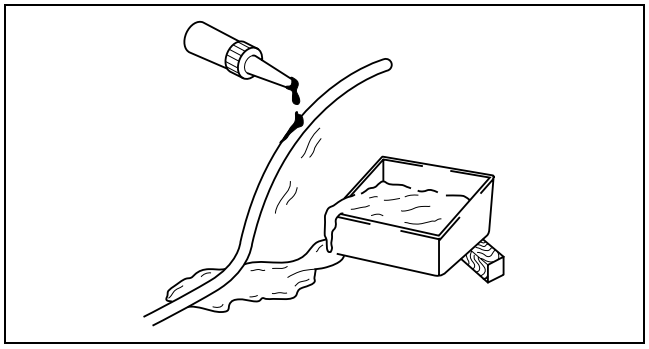

WGIWXX0034E

Hose Clamps

- When reinstalling, position the hose clamp in the original location on the hose and squeeze the clamp lightly with large pliers to ensure a good fit.

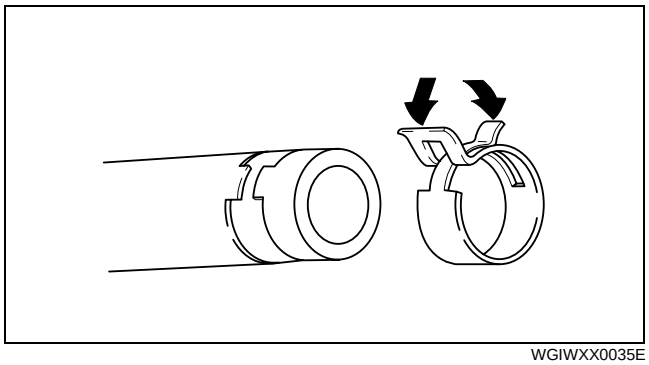

WGIWXX0035E

Torque Formulas

- When using a torque wrench-**SST** or equivalent combination, the written torque must be recalculated due to the extra length that the **SST** or equivalent adds to the torque wrench. Recalculate the torque by using the following formulas. Choose the formula that applies to you.

Torque Unit	Formula
N·m	N·m × [L/(L+A)]
kgf·m	kgf·m × [L/(L+A)]
kgf·cm	kgf·cm × [L/(L+A)]
ft·lbf	ft·lbf × [L/(L+A)]
in·lbf	in·lbf × [L/(L+A)]

A : The length of the **SST** past the torque wrench drive.
L : The length of the torque wrench.

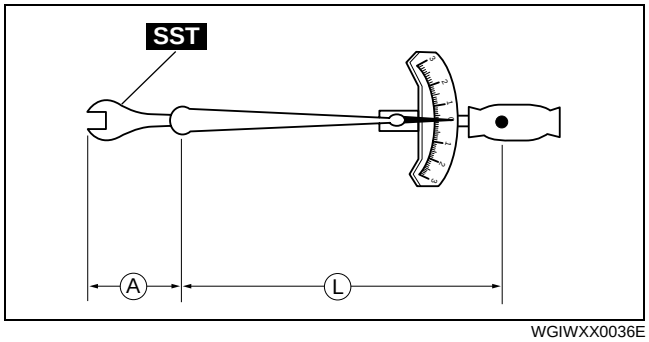

WGIWXX0036E

Vise

- When using a vise, put protective plates in the jaws of the vise to prevent damage to parts.

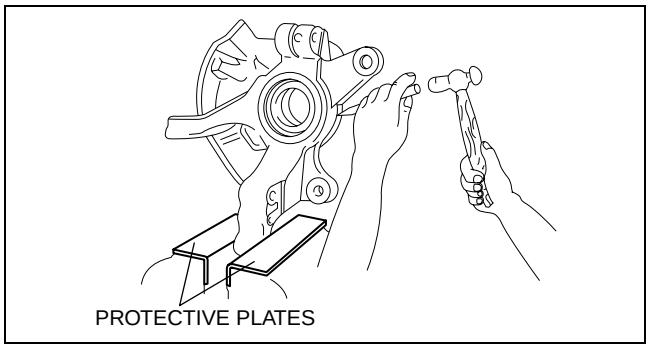

CHU0014W010

ELECTRICAL SYSTEM

CHU000000006M01

Connectors

Disconnecting connectors

- When disconnecting connector, grasp the connectors, not the wires.

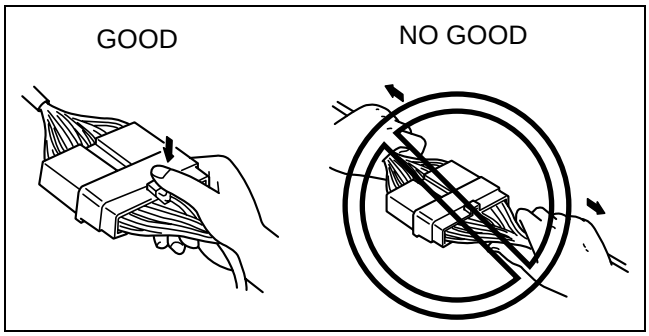

CHU0000W014

- Connectors can be disconnected by pressing or pulling the lock lever as shown.

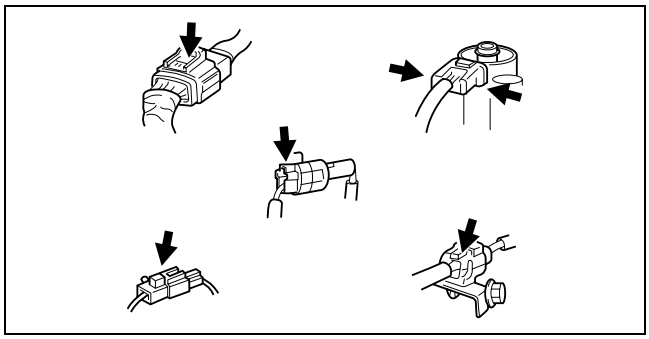

WGIWXX0042E

Locking connector

- When locking connectors, listen for a click indicating they are securely locked.

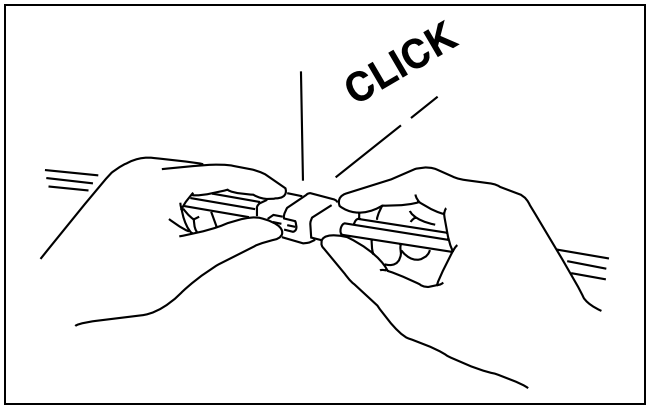

WGIWXX0043E

Inspection

- When a tester is used to inspect for continuity or measuring voltage, insert the tester probe from the wiring harness side.
- Inspect the terminals of waterproof connectors from the connector side since they cannot be accessed from the wiring harness side.

Caution

- **To prevent damage to the terminal, wrap a thin wire around the tester probe before inserting into terminal.**

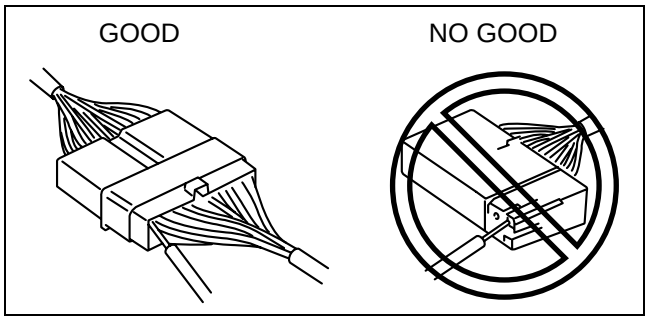

CHU0000W011

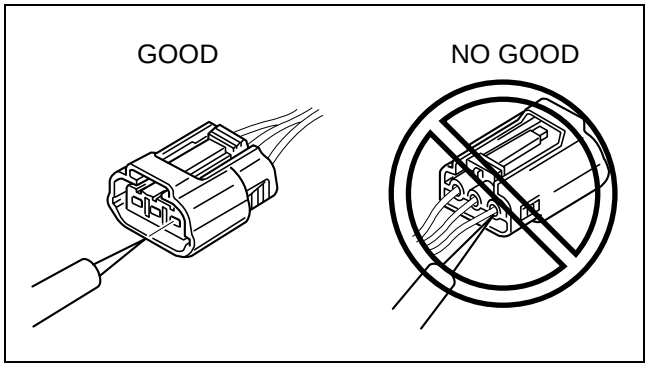

CHU0000W012

SAE STANDARDS

CHU000000003M02

- In accordance with new regulations, SAE (Society of Automotive Engineers) standard names and abbreviations are now used in this manual. The table below lists the names and abbreviations that have been used in Mazda manuals up to now and their SAE equivalents.

SAE Standard		Remark		SAE Standard		Remark
Abbreviation	Name			Abbreviation	Name	
AP	Accelerator Pedal			MAP	Manifold Absolute Pressure	
APP	Accelerator Pedal Position			MAF	Mass Air Flow	
ACL	Air Cleaner			MAF sensor	Mass Air Flow Sensor	
A/C	Air Conditioning			MFL	Multiport Fuel Injection	
A/F	Air Fuel Ratio			OBD	On-board Diagnostic System	
BARO	Barometric Pressure			OL	Open Loop	
B+	Battery Positive Voltage			OC	Oxidation Catalytic Converter	
CMP sensor	Camshaft Position Sensor			O2S	Oxygen Sensor	
LOAD	Calculated Load Value			PNP	Park/Neutral Position	
CAC	Charge Air Cooler			PID	Parameter Identification	
CLS	Closed Loop System			PSP	Power Steering Pressure	
CTP	Closed Throttle Position			PCM	Powertrain Control Module	#3
CPP	Clutch Pedal Position			PAIR	Pulsed Secondary Air Injection	Pulsed injection
CIS	Continuous Fuel Injection System					
CKP sensor	Crankshaft Position Sensor			AIR	Secondary Air Injection	Injection with air pump
DLC	Data Link Connector					
DTM	Diagnostic Test Mode	#1				
DTC	Diagnostic Trouble Code(s)			SAPV	Secondary Air Pulse Valve	
DI	Distributor Ignition			SFI	Sequential Multiport Fuel Injection	
DLI	Distributorless Ignition					
EI	Electronic Ignition	#2		3GR	Third Gear	
ECT	Engine Coolant Temperature			TWC	Three Way Catalytic Converter	
EM	Engine Modification			TB	Throttle Body	
EVAP	Evaporative Emission			TP	Throttle Position	
EGR	Exhaust Gas Recirculation			TP sensor	Throttle Position Sensor	
FC	Fan Control			TCC	Torque Converter Clutch	
FF	Flexible Fuel			TCM	Transmission (Transaxle) Control Module	
4GR	Fourth Gear					
GEN	Generator			TR	Transmission (Transaxle) Range	
GND	Ground			TC	Turbocharger	
HO2S	Heated Oxygen Sensor	With heater		VSS	Vehicle Speed Sensor	
				VR	Voltage Regulator	
IAC	Idle Air Control			VAF sensor	Volume Air Flow Sensor	
IAT	Intake Air Temperature			WU-TWC	Warm Up Three Way Catalytic Converter	#4
KS	Knock Sensor					
MIL	Malfunction Indicator Lamp			WOP	Wide Open Throttle	

#1 : Diagnostic trouble codes depend on the diagnostic test mode.
#2 : Controlled by the PCM
#3 : Device that controls engine and powertrain
#4 : Directly connected to exhaust manifold

ABBREVIATIONS

CHU000000011M02

SST	Special Service Tool

TRANSMISSION/TRANSAXLE

05
SECTION

MANUAL TRANSMISSION. . . . 05-11
TECHNICAL DATA 05-50
SERVICE TOOLS. 05-60

05–11 MANUAL TRANSMISSION

PRECAUTION 05–11–2
EXTENSION HOUSING COMPONENT DISASSEMBLY 05–11–3
TRANSMISSION CASE AND 6TH GEAR COMPONENT DISASSEMBLY 05–11–4
Snap Ring Disassembly Note 05–11–5
Clutch Hub Component (6th) Disassembly Note 05–11–5
Inner Shift Lever Disassembly Note . . . 05–11–5
Clutch Hub Sleeve Disassembly Note 05–11–5
CLUTCH HOUSING COMPONENT DISASSEMBLY 05–11–6
Front Cover Disassembly Note 05–11–7
SHIFT FORK AND SHIFT ROD COMPONENT DISASSEMBLY 05–11–7
MAIN DRIVE GEAR AND MAINSHAFT COMPONENT DISASSEMBLY 05–11–8
Bearing Disassembly Note 05–11–9
1st Gear Disassembly Note 05–11–9
2nd Gear Disassembly Note 05–11–9
Reverse Gear Disassembly Note 05–11–9
COUNTERSHAFT COMPONENT DISASSEMBLY 05–11–10
Roller Bearing Disassembly Note 05–11–11
Counter Drive Gear Disassembly Note 05–11–11
Counter 3rd Gear Disassembly Note 05–11–11
MANUAL TRANSMISSION INSPECTION 05–11–12
Drive Gear Inspection 05–11–12
Reverse Idler Gear and Reverse Idler Shaft Inspection 05–11–13
Synchronizer Ring Inspection 05–11–13
Mainshaft Inspection 05–11–13
Countershaft Inspection 05–11–13
Clutch Hub Sleeve and Shift Fork Inspection 05–11–14
COUNTERSHAFT COMPONENT ASSEMBLY 05–11–14
Clutch Hub Component (3rd/4th) Assembly Note 05–11–15
Thrust Washer Assembly Note 05–11–16
Counter Drive Gear Assembly Note . . . 05–11–16
Snap Ring (Friction Gear) Assembly Note 05–11–17
Roller Bearing Assembly Note 05–11–17
Snap Ring (Roller Bearing) Assembly Note 05–11–17
MAIN DRIVE GEAR AND MAINSHAFT COMPONENT ASSEMBLY 05–11–18
Bearing Assembly Note 05–11–19
Snap Ring (Bearing) Assembly Note . . 05–11–19
Clutch Hub Component (5th/Reverse) Assembly Note 05–11–19
Snap Ring (Reverse Gear) Assembly Note 05–11–20
Clutch Hub Component (1st/2nd) Assembly Note 05–11–20
6th Gear Assembly Note 05–11–21
Snap Ring (6th Gear) Assembly Note . 05–11–21
CLUTCH HOUSING COMPONENT, SHIFT FORK AND SHIFT ROD COMPONENT ASSEMBLY 05–11–22
Reverse Idler Gear Component Assembly Note 05–11–23
Clutch Housing Assembly Note 05–11–23
Bolt and Gasket Assembly Note. 05–11–23
3rd/4th Shift Fork and Shift Arm (Reverse) Assembly Note 05–11–24
5th/Reverse Counter Lever Assembly Note 05–11–24
TRANSMISSION CASE AND 6TH GEAR COMPONENT ASSEMBLY 05–11–25
Shift Rod Assembly Note 05–11–26
Transmission Case Assembly Note . . . 05–11–26
Bolt and Gasket Assembly Note. 05–11–27
Oil Seal Assembly Note 05–11–27
Inner Shift Lever Assembly Note 05–11–28
Clutch Hub Component (6th) Assembly Note 05–11–28
Snap Ring Assembly Note 05–11–28
6th Shift Fork Assembly Note. 05–11–29
Plug Assembly Note. 05–11–29
EXTENSION HOUSING COMPONENT ASSEMBLY 05–11–30
Oil Seal Assembly Note 05–11–31
Torsion Spring Assembly Note. 05–11–31

PRECAUTION

CHU051117010M01

1. Clean the transmission exterior thoroughly using a steam cleaner or cleaning solvents before disassembly.

   Warning
   - **Using compressed air can cause dirt and other particles to fly out, causing injury to the eyes. Wear protective eye wear whenever using compressed air.**

   Caution
   - **Cleaning sealed bearings using cleaning fluids or a steam cleaner can wash the grease out of the bearing.**

2. Clean the removed parts using cleaning solvent, and dry them using compressed air.
3. Clean out all holes and passages using compressed air, and check that there are no obstructions.
4. Use a plastic hammer when disassembling the transmission case and other light alloy metal parts.
5. Make sure each part is cleaned before assembling.
6. Coat all movable parts with the specified oil.
7. Replace parts whenever required.
8. Remove old sealant from contact surfaces before applying new sealant.
9. Assemble the parts within **10 min** after applying sealant. Allow all sealant to cure at least **30 min** after assembling before filling the transmission with transmission oil.

   Warning
   - **Although the stand has a self-locking brake system, there is a possibility that the brake may not hold when the transmission is held in a lopsided position on the stand. This would cause the transmission to turn suddenly, causing serious injury. Never keep the transmission tilted to one side. Always hold the rotating handle firmly when turning the transmission.**

EXTENSION HOUSING COMPONENT DISASSEMBLY

CHU051117010M02

1. Disassemble in the order indicated in the table.

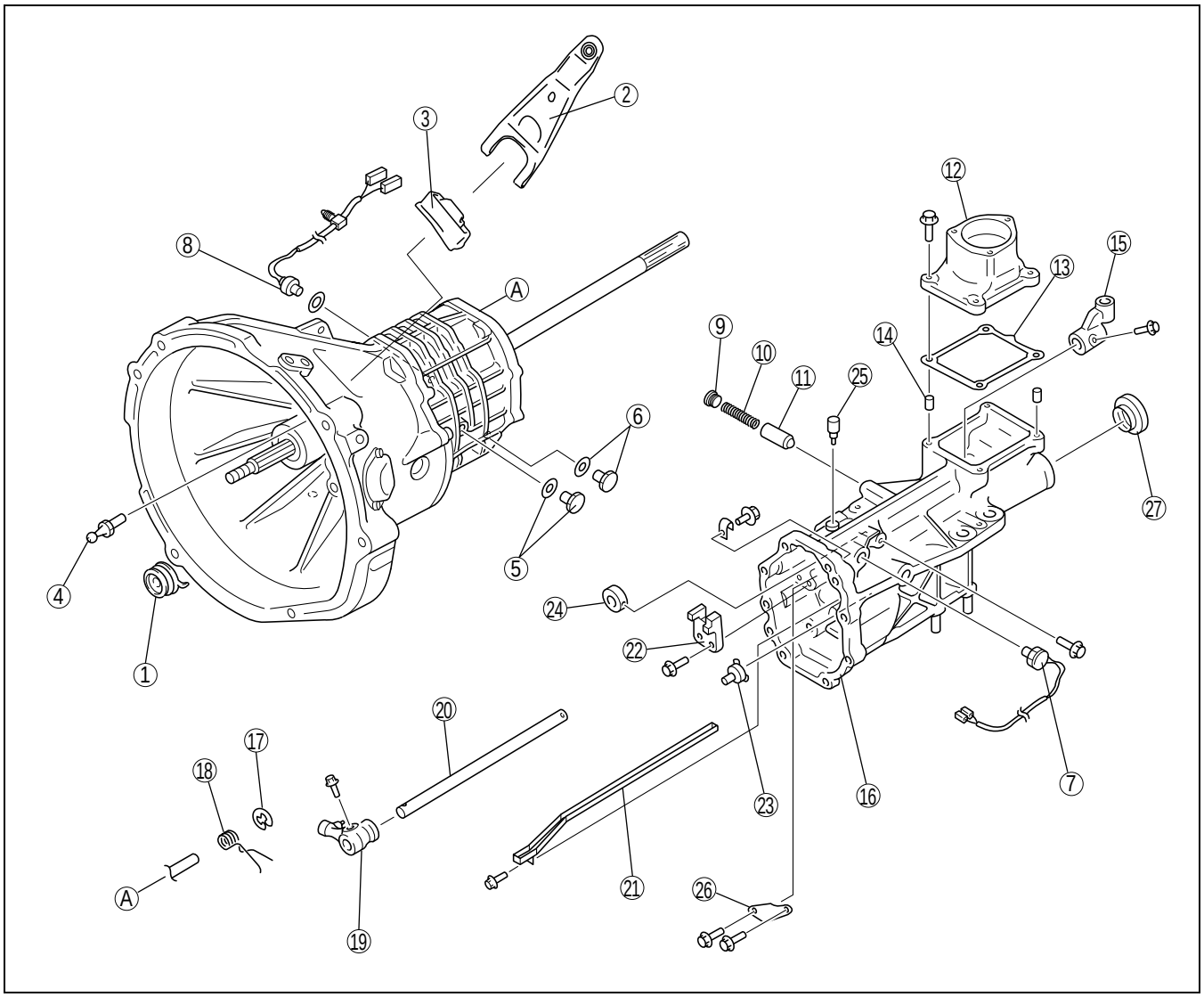

BHJ0511M101

1	Clutch release collar
2	Clutch release fork
3	Dust cover
4	Pivot pin
5	Filler plug, gasket
6	Drain plug, gasket
7	Neutral switch
8	Back-up light switch
9	Plug
10	Pressure spring
11	Push pin component
12	Control case
13	Gasket
14	Tubular pin

15	Control rod end
16	Extension housing component
17	Retaining ring
18	Torsion spring
19	Shift lever
20	Shift rod
21	Oil passage
22	Stopper block
23	Oil funnel
24	Lever support
25	Breather
26	Baffle plate
27	Oil seal

TRANSMISSION CASE AND 6TH GEAR COMPONENT DISASSEMBLY

CHU051117010M03

Note

- Measure the thrust and radial clearance of 6th gear before disassembly. (See 05–11–12 Drive Gear Inspection.)

1. Disassemble in the order indicated in the table.

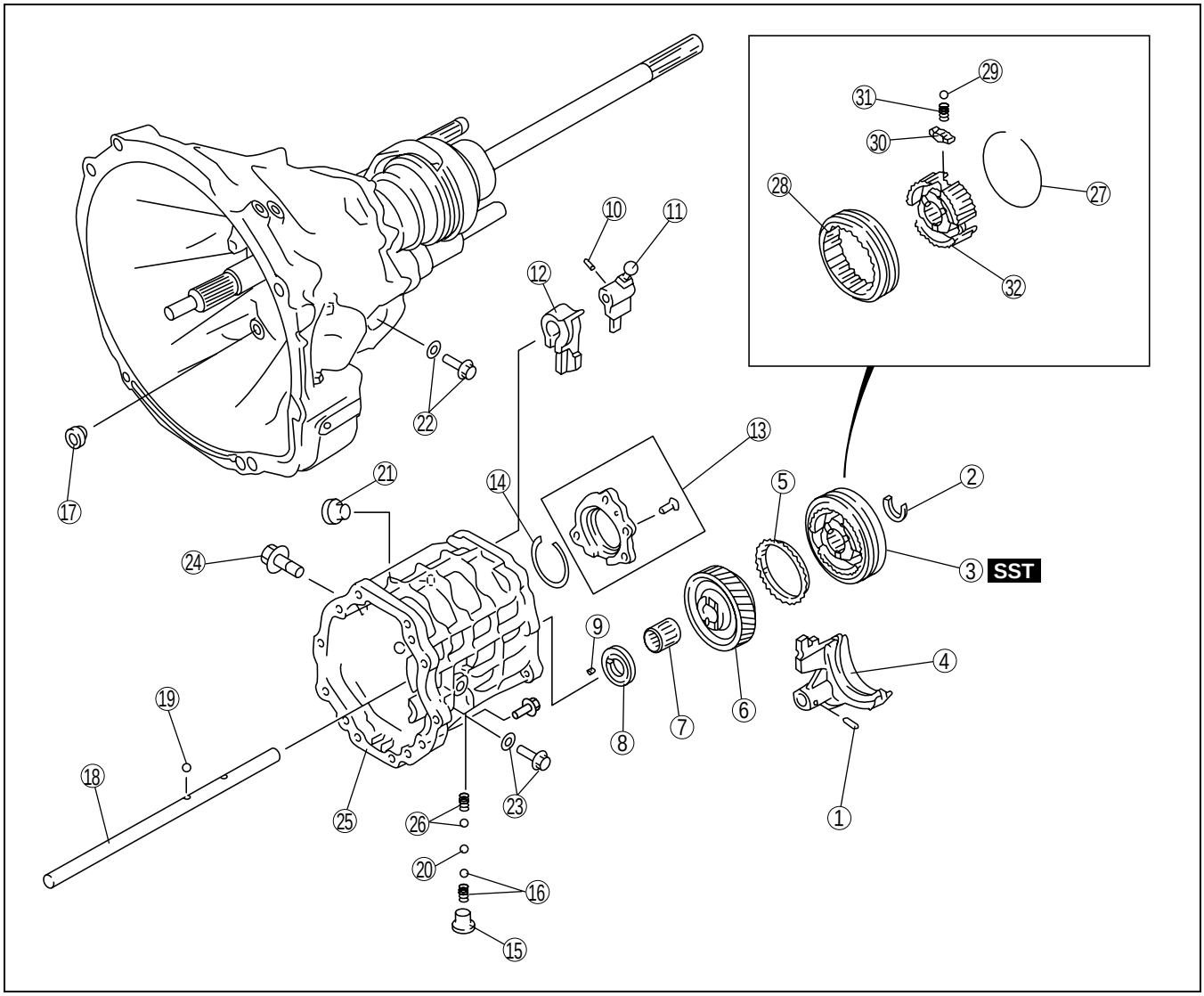

BHJ0511M103

1	Spring pin
2	Snap ring (See 05–11–5 Snap Ring Disassembly Note.)
3	Clutch hub component (6th) (See 05–11–5 Clutch Hub Component (6th) Disassembly Note.)
4	6th shift fork
5	Synchronizer ring
6	6th gear
7	Needle bearing
8	Thrust washer
9	Pin
10	Spring pin
11	Inner shift lever (See 05–11–5 Inner Shift Lever Disassembly Note.)
12	Interlock sleeve

13	Bearing cover component
14	Snap ring (rear)
15	Plug
16	Steel ball, pressure spring
17	Plug
18	Shift rod
19	Steel ball
20	Steel ball
21	Plug
22	Bolt, gasket
23	Bolt, gasket
24	Bolt
25	Transmission case
26	Pressure spring, steel ball
27	Retaining ring

28	Clutch hub sleeve (See 05–11–5 Clutch Hub Sleeve Disassembly Note.)
29	Steel ball
30	Synchronizer key
31	Synchronizer key spring
32	Clutch hub

Snap Ring Disassembly Note

1. Remove the snap ring using two flathead screwdrivers and a hammer.

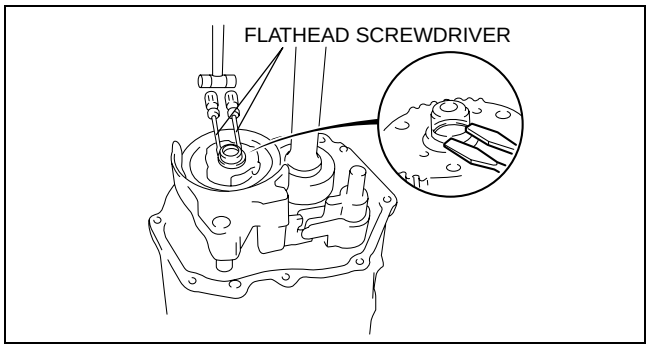

CHU0511M104

Clutch Hub Component (6th) Disassembly Note

1. Remove the clutch hub component (6th) and the 6th shift fork together using the **SST**.

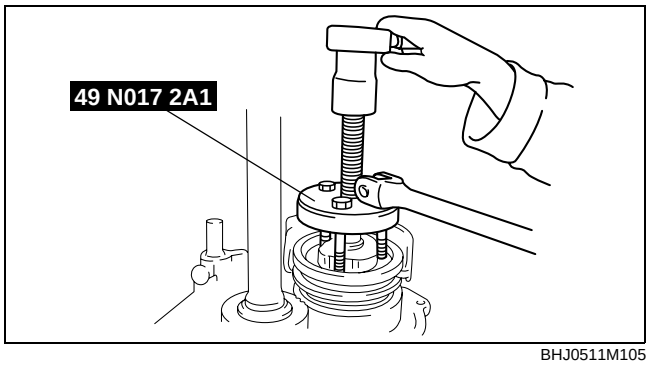

BHJ0511M105

Inner Shift Lever Disassembly Note

1. Attach a flathead screwdriver as shown in the figure, and remove the inner shift lever by tapping the shift rod with a plastic hammer.

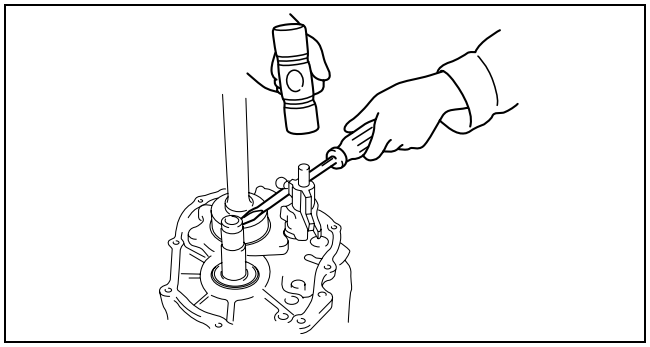

BHJ0511M106

Clutch Hub Sleeve Disassembly Note

1. Remove the clutch hub sleeve covering the clutch hub component with a rag to prevent the steel balls and synchronizer key springs from springing out.

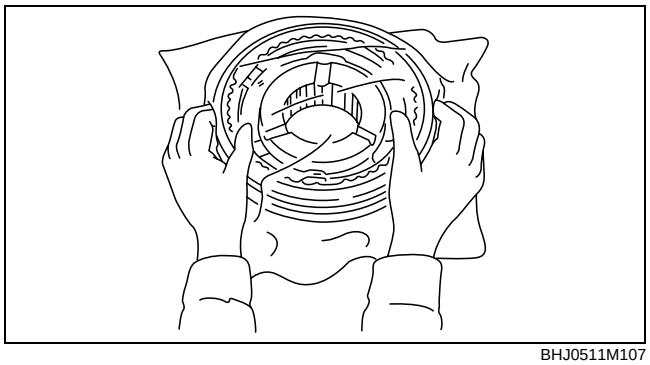

BHJ0511M107

CLUTCH HOUSING COMPONENT DISASSEMBLY

CHU051117010M04

1. Disassemble in the order indicated in the table.

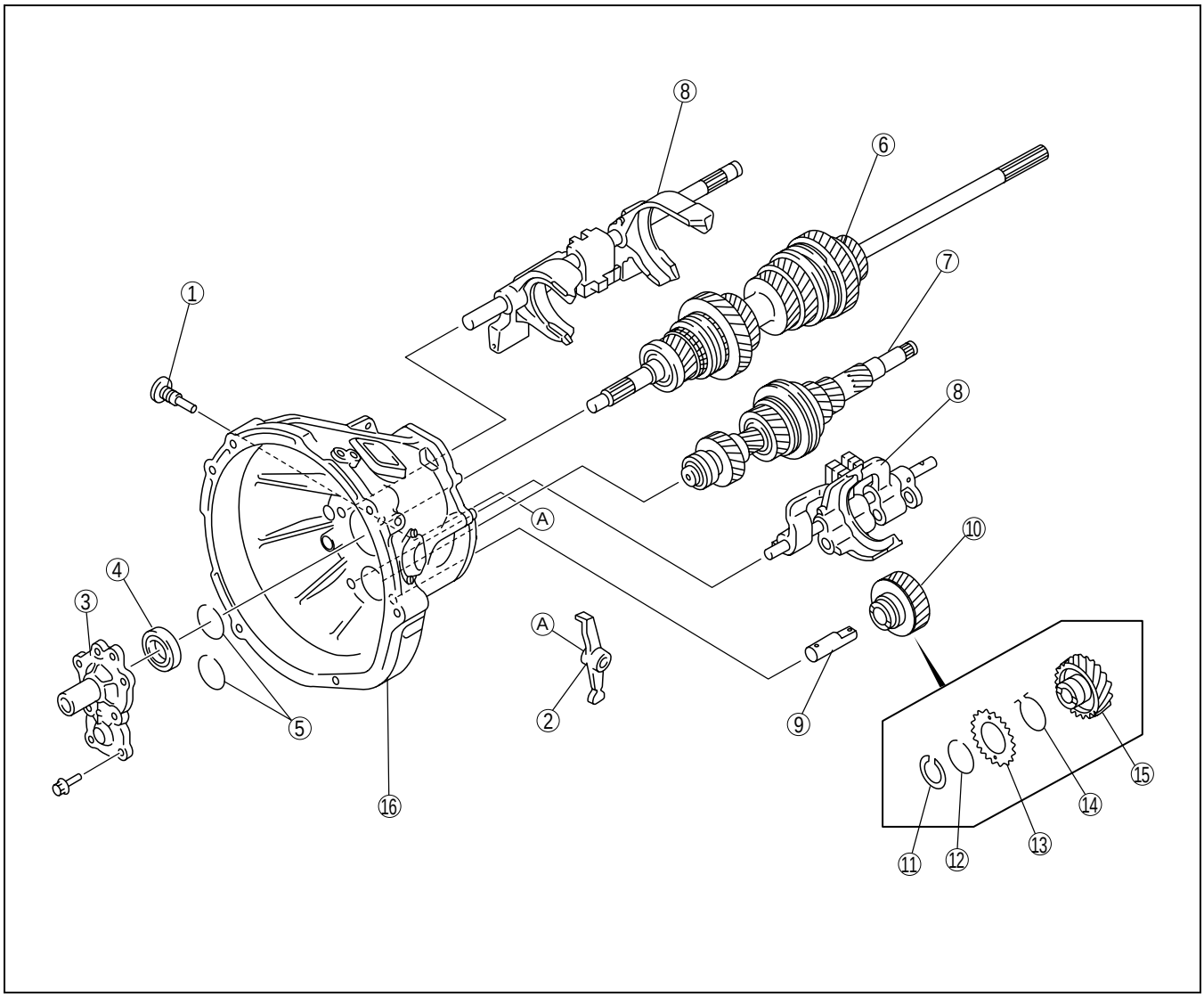

BHJ0511M108

1	Crank lever shaft
2	5th/reverse counter lever
3	Front cover (See 05–11–7 Front Cover Disassembly Note.)
4	Oil seal
5	Snap ring (front)
6	Main drive gear, mainshaft component
7	Countershaft component
8	Shift fork and shift rod component

9	Reverse idler shaft
10	Reverse idler gear component
11	Snap ring
12	Spacer
13	Friction gear
14	Torsion spring
15	Reverse idler gear
16	Clutch housing

Front Cover Disassembly Note

1. Remove the front cover by prying with a flathead screwdriver as shown in the figure.

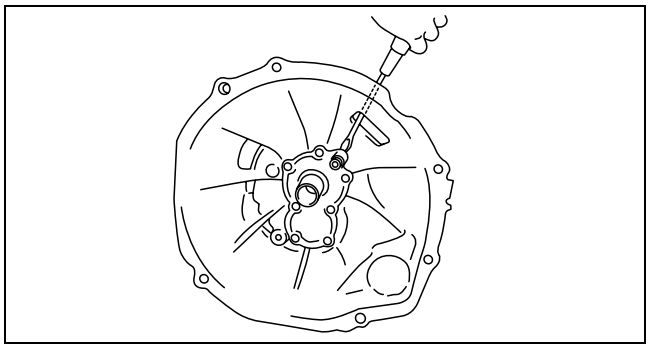

BHJ0511M109

SHIFT FORK AND SHIFT ROD COMPONENT DISASSEMBLY

CHU051117030M01

1. Disassemble in the order indicated in the table.

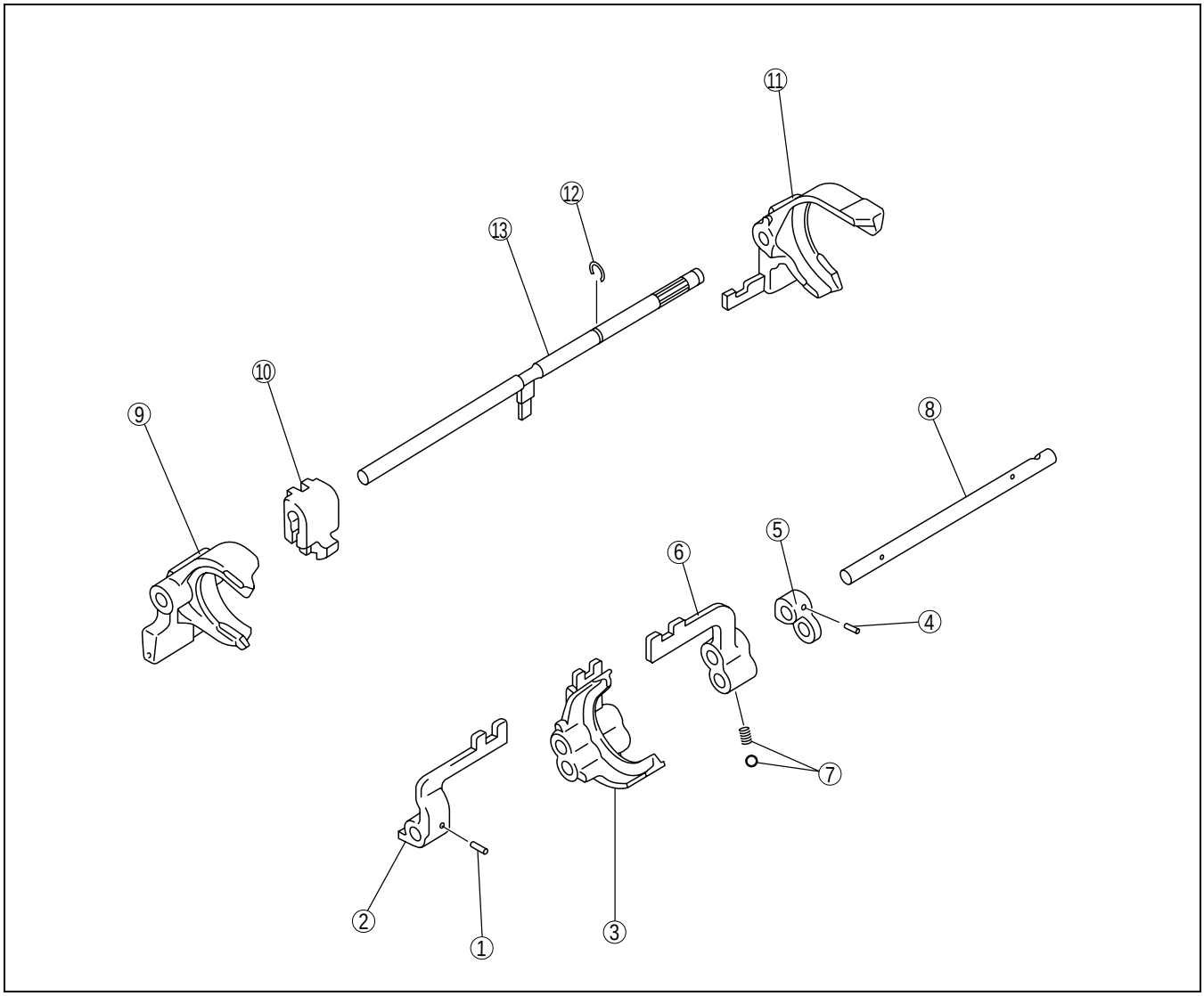

BHJ0511M110

1	Spring pin
2	Shift arm (reverse)
3	3rd/4th shift fork
4	Spring pin
5	Stopper block
6	shift arm (5th)
7	Pressure spring, steel ball

8	Shift rod
9	5th/reverse shift fork
10	Interlock sleeve
11	1st/2nd shift fork
12	Snap ring
13	Shift rod

MAIN DRIVE GEAR AND MAINSHAFT COMPONENT DISASSEMBLY

CHU051117050M01

Note

- Measure the thrust and radial clearance of 1st, 2nd and reverse gear before disassembly. (See 05–11–12 Drive Gear Inspection.)

1. Disassemble in the order indicated in the table.

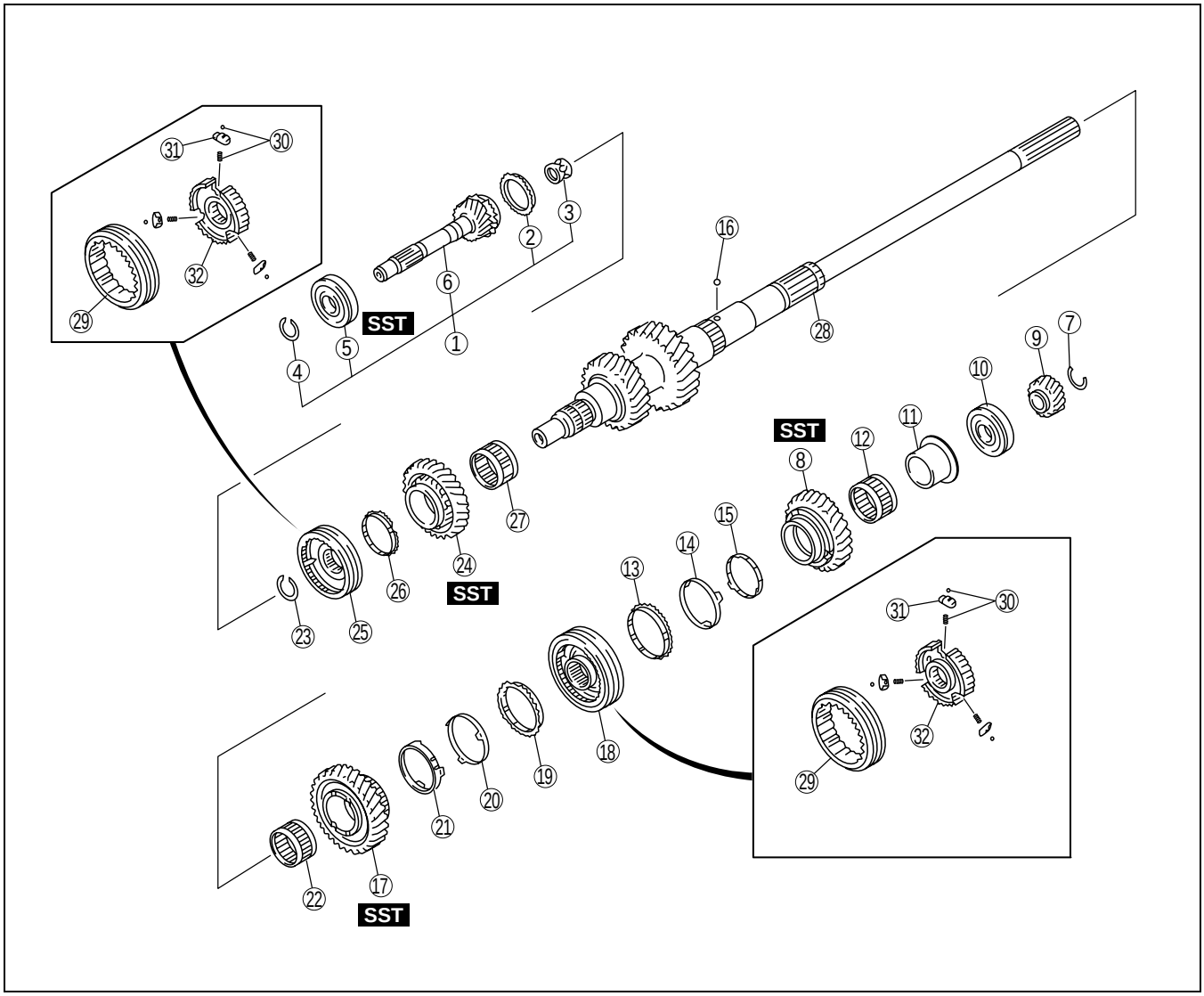

BHJ0511M111

1	Main drive gear component
2	Synchronizer ring
3	Needle bearing
4	Snap ring (bearing) (See 05–11–5 Snap Ring Disassembly Note.)
5	Bearing (See 05–11–9 Bearing Disassembly Note.)
6	Main drive gear
7	Snap ring (6th gear) (See 05–11–5 Snap Ring Disassembly Note.)
8	1st gear (See 05–11–9 1st Gear Disassembly Note.)
9	6th gear
10	Bearing
11	Inner race
12	Needle bearing

13	Synchronizer ring
14	Middle ring
15	Inner ring
16	Steel ball
17	2nd gear (See 05–11–9 2nd Gear Disassembly Note.)
18	Clutch hub component (1st/2nd)
19	Synchronizer ring
20	Middle ring
21	Inner ring
22	Needle bearing
23	Snap ring (reverse gear)
24	Reverse gear (See 05–11–9 Reverse Gear Disassembly Note.)
25	Clutch hub component (5th/reverse)
26	Synchronizer ring

27	Needle bearing
28	Mainshaft
29	Clutch hub sleeve (See 05–11–5 Clutch Hub Sleeve Disassembly Note.)

30	Steel ball, synchronizer key spring
31	Synchronizer key
32	Clutch hub

Bearing Disassembly Note

1. Remove the bearing using the **SST**.

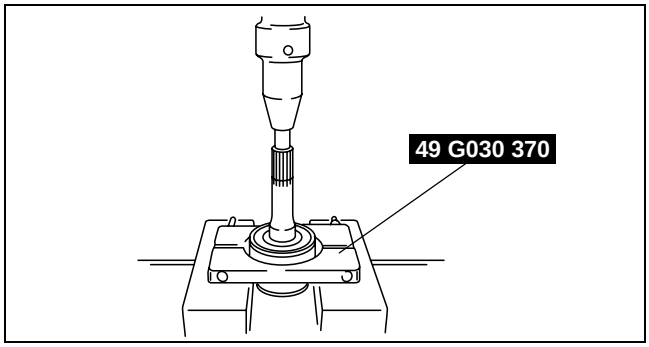

BHJ0511M112

1st Gear Disassembly Note

1. Shift the clutch hub component (1st/2nd) to the 2nd gear.
2. Remove the 6th gear, bearing and 1st gear together using the **SST** and a press.

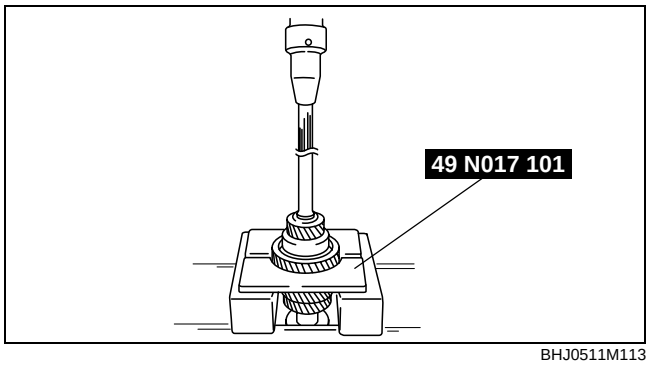

BHJ0511M113

2nd Gear Disassembly Note

1. Remove the clutch hub component (1st/2nd) and 2nd gear together using the **SST** and a press.

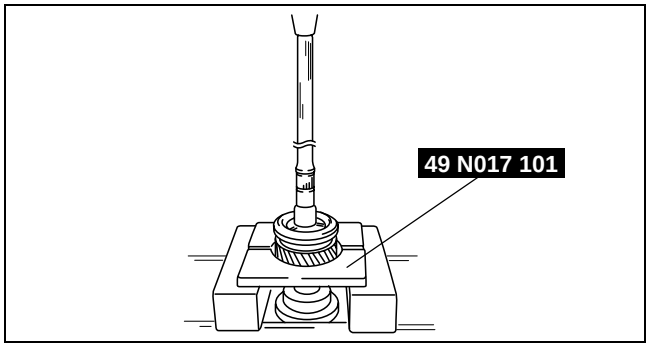

BHJ0511M114

Reverse Gear Disassembly Note

1. Remove the clutch hub component (5th/reverse) and reverse gear together using the **SST** and a press.

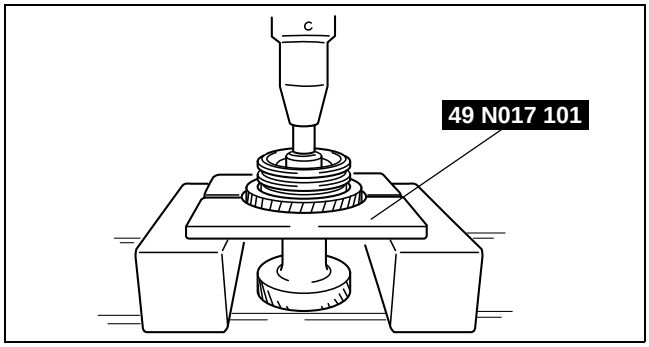

BHJ0511M115

COUNTERSHAFT COMPONENT DISASSEMBLY

CHU051117050M02

Note

- Measure the thrust and radial clearance of 3rd and 4th gear before disassembly. (See 05–11–12 Drive Gear Inspection.)

1. Disassemble in the order indicated in the table.

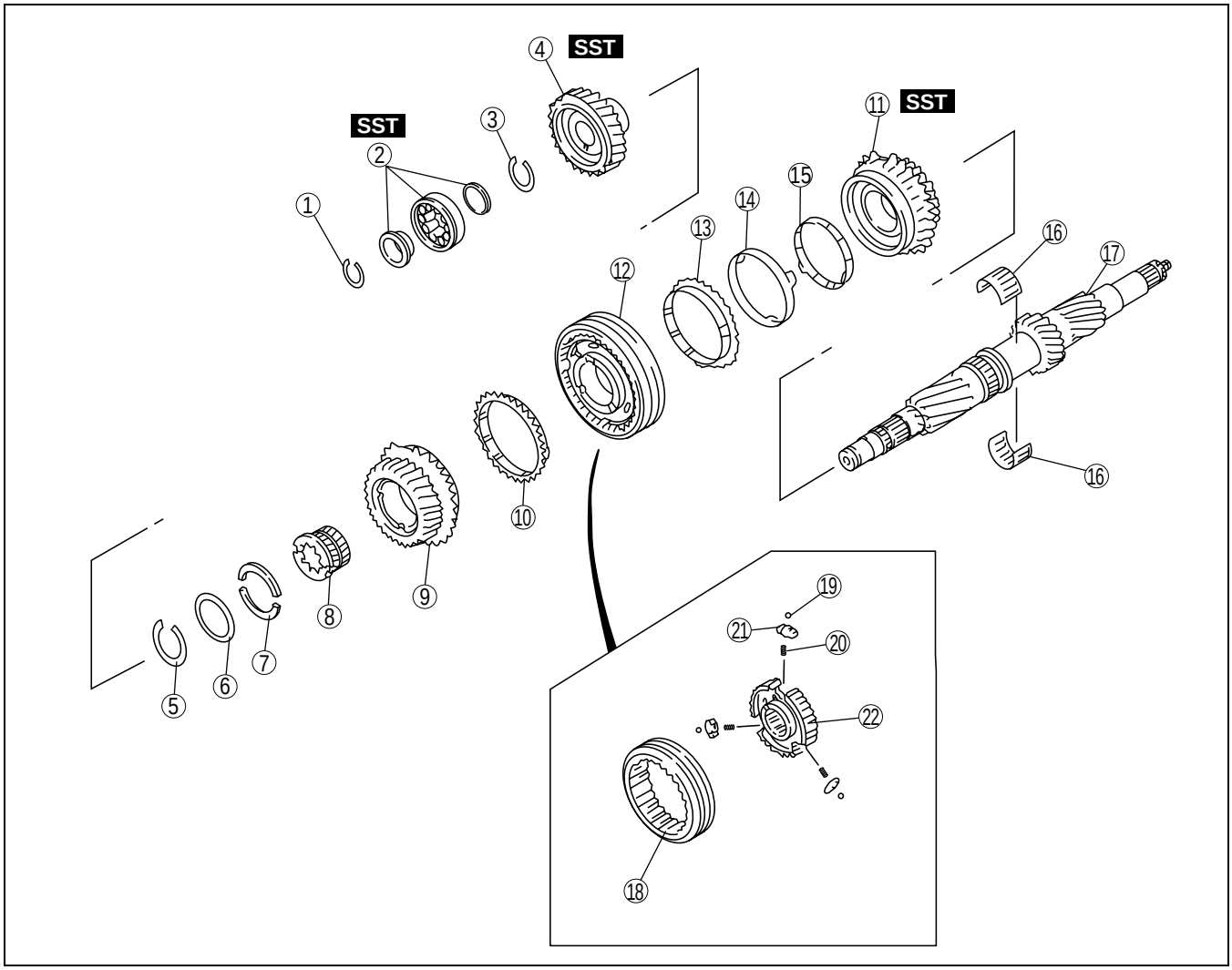

BHJ0511M116

1	Snap ring (roller bearing)
2	Roller bearing (See 05–11–11 Roller Bearing Disassembly Note.)
3	Snap ring (friction gear)
4	Counter drive gear (See 05–11–11 Counter Drive Gear Disassembly Note.)
5	Snap ring
6	Retaining ring
7	Thrust washer
8	Inner race
9	Counter 4th gear
10	Synchronizer ring
11	Counter 3rd gear (See 05–11–11 Counter 3rd Gear Disassembly Note.)

12	Clutch hub component (3rd/4th)
13	Synchronizer ring
14	Middle ring
15	Inner ring
16	Needle bearing
17	Countershaft gear
18	Clutch hub sleeve (See 05–11–5 Clutch Hub Sleeve Disassembly Note.)
19	Steel ball
20	Synchronizer key spring
21	Synchronizer key
22	Clutch hub

Roller Bearing Disassembly Note

1. Remove the roller bearing using the **SSTs** and a press.

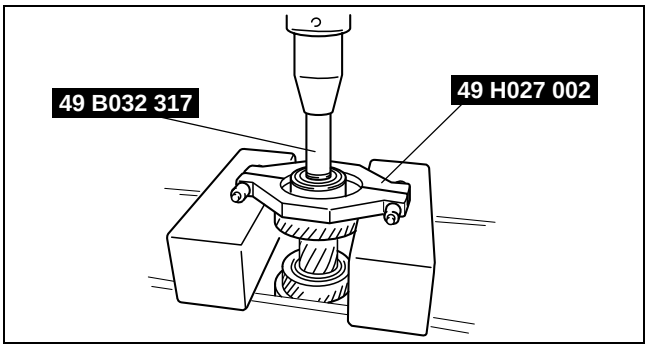

BHJ0511M117

Counter Drive Gear Disassembly Note

1. Remove the counter drive gear using the **SST** and a press.

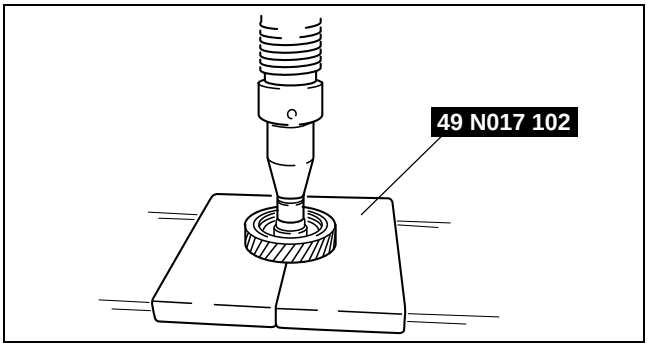

BHJ0511M118

Counter 3rd Gear Disassembly Note

1. Remove the counter 3rd gear and clutch hub component (3rd/4th) together using the **SST** and a press.

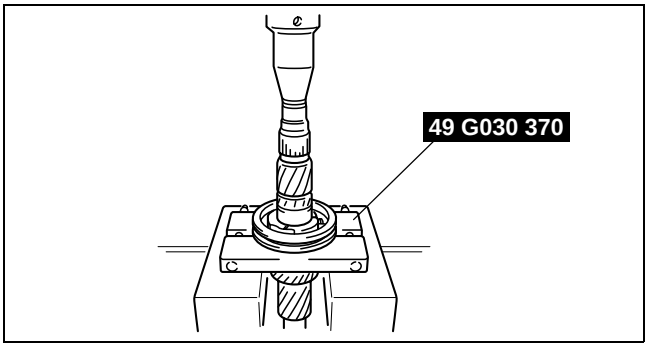

BHJ0511M119

MANUAL TRANSMISSION INSPECTION

CHU051117050M03

Drive Gear Inspection

Thrust clearance inspection

1. Measure the thrust clearance of each gear using a feeler gauge and a dial gauge as shown in the figure.

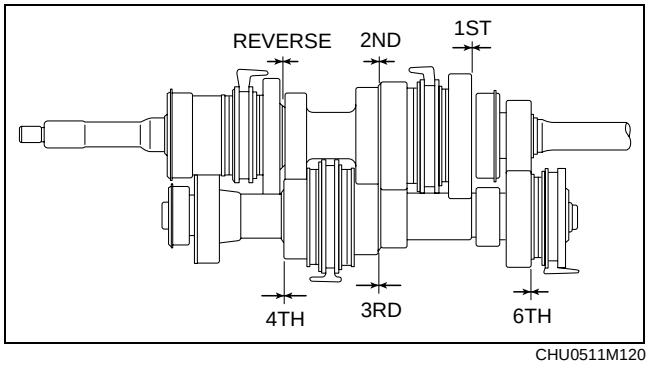

CHU0511M120

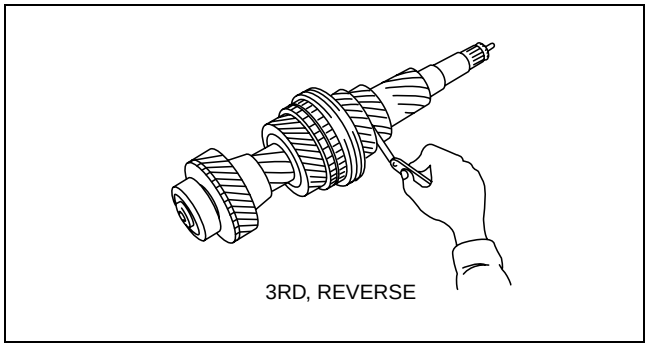

CHU0511M121

Thrust clearance

(mm {in})

Gear	Thrust clearance
1st	0.15—0.40 {0.006—0.015}
2nd	0.10—0.45 {0.004—0.017}
3rd	0.10—0.35 {0.004—0.013}
4th	0.10—0.35 {0.004—0.013}
6th	0.10—0.40 {0.004—0.015}
Reverse	0.10—0.45 {0.004—0.017}

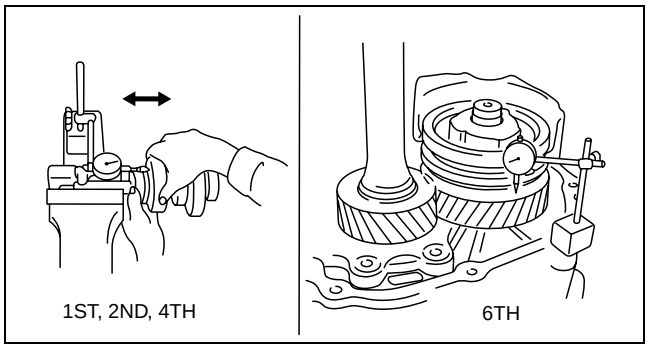

CHU0511M122

- If not within the specification, replace the malfunctioning parts.

Radial clearance inspection

1. Measure the radial clearance of each gear using a dial gauge.

Radial clearance

(mm {in})

Gear	Radial clearance
1st	0.015—0.066 {0.0006—0.0025}
2nd	0.015—0.066 {0.0006—0.0025}
3rd	0.015—0.068 {0.0006—0.0026}
4th	0.065—0.115 {0.0026—0.0045}
5th (Drive gear)	0.029—0.072 {0.0012—0.0028}
6th	0.015—0.068 {0.0006—0.0026}
Reverse	0.015—0.066 {0.0006—0.0025}

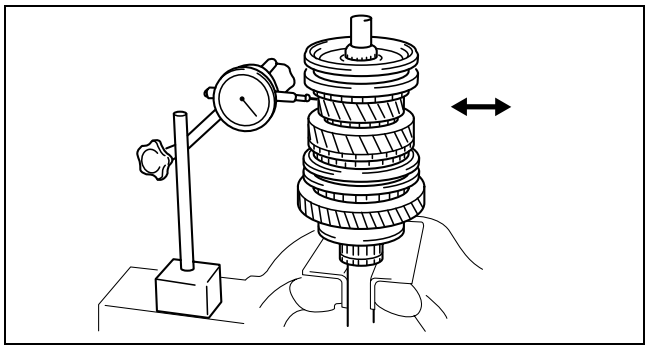

BHJ0511M123

- If not within the specification, replace the synchronizer ring.

Reverse Idler Gear and Reverse Idler Shaft Inspection
Radial clearance inspection

1. Secure the reverse idler gear and reverse idler shaft in a vise, and measure the radial clearance using a dial gauge.

   Radial clearance
   0.040—0.082 mm {0.0016—0.0032 in}

- If not within the specification, replace the reverse idler gear and the reverse idler shaft.

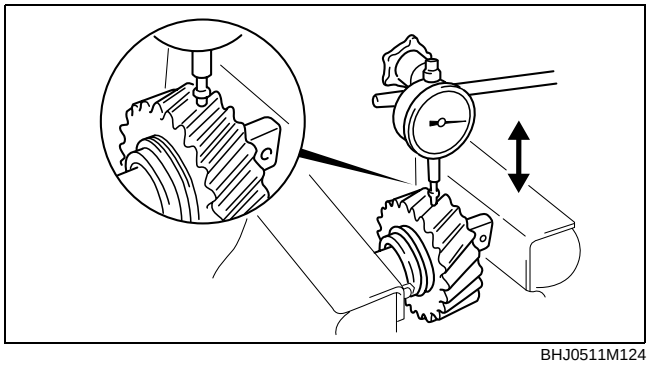

BHJ0511M124

Synchronizer Ring Inspection

1. Set the synchronizer ring evenly in the gear, and measure the clearance between the synchronizer ring and flank surface of the gear all around the circumference using a feeler gauge.

Clearance

(mm {in})

Gear		Clearance
1st 2nd 3rd	Inner ring	0.98—1.62 {0.04—0.06}
	Middle ring	0.68—1.92 {0.03—0.07}
	Synchronizer ring	0.88—1.72 {0.04—0.06}
4th 5th		0.80—1.60 {0.04—0.06}
6th Reverse		0.88—1.52 {0.04—0.05}

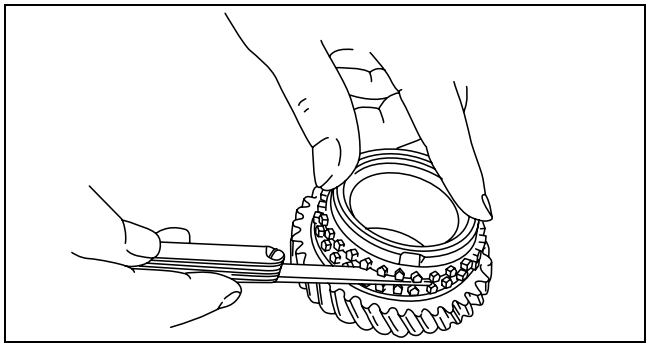

BHJ0511M125

- If not within the specification, replace the synchronizer ring.

Mainshaft Inspection

1. Hold the mainshaft with the V-blocks and measure the runout using a dial gauge as shown in the figure.

   Maximum runout
   0.03 mm {0.0012 in}

- If it exceeds the maximum specification, replace the mainshaft.

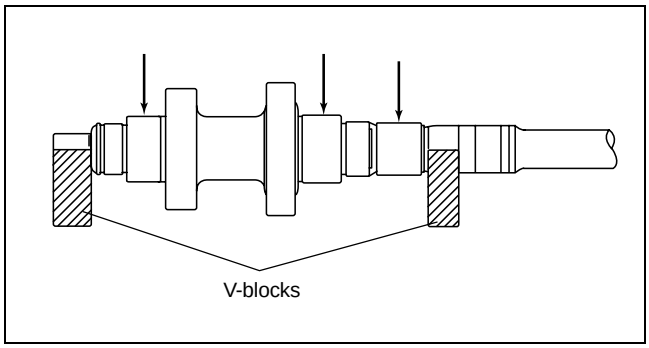

CHU0511M126

Countershaft Inspection

1. Hold the countershaft with the V-blocks and measure the runout using a dial gauge as shown in the figure.

   Maximum runout
   0.03 mm {0.0012 in}

- If it exceeds the maximum specification, replace the countershaft.

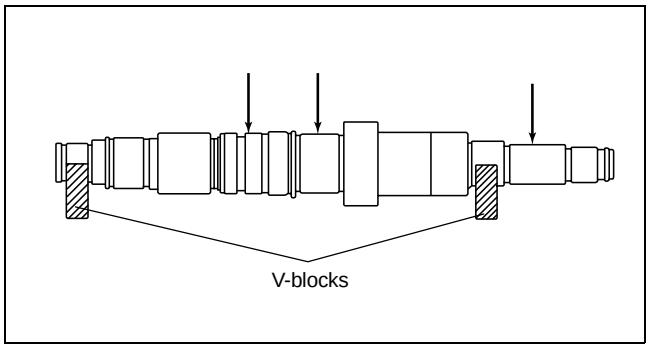

CHU0511M127

Clutch Hub Sleeve and Shift Fork Inspection

1. Measure the shift fork thickness and the groove width of the clutch hub sleeve with a vernier caliper, and calculate the clearance.

   Clearance
   0.15—0.35 mm {0.006—0.013 in}

- If not within the specification, replace the clutch hub sleeve and shift fork.

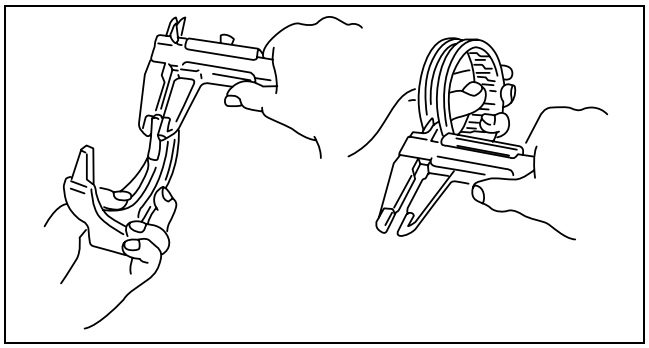

BHJ0511M128

COUNTERSHAFT COMPONENT ASSEMBLY

CHU051117050M04

1. Assemble in the order indicated in the table.
2. Verify the following after assembly.
   (1) The gear rotates smoothly when rotated by hand.
   (2) The synchronizer ring is not stuck.

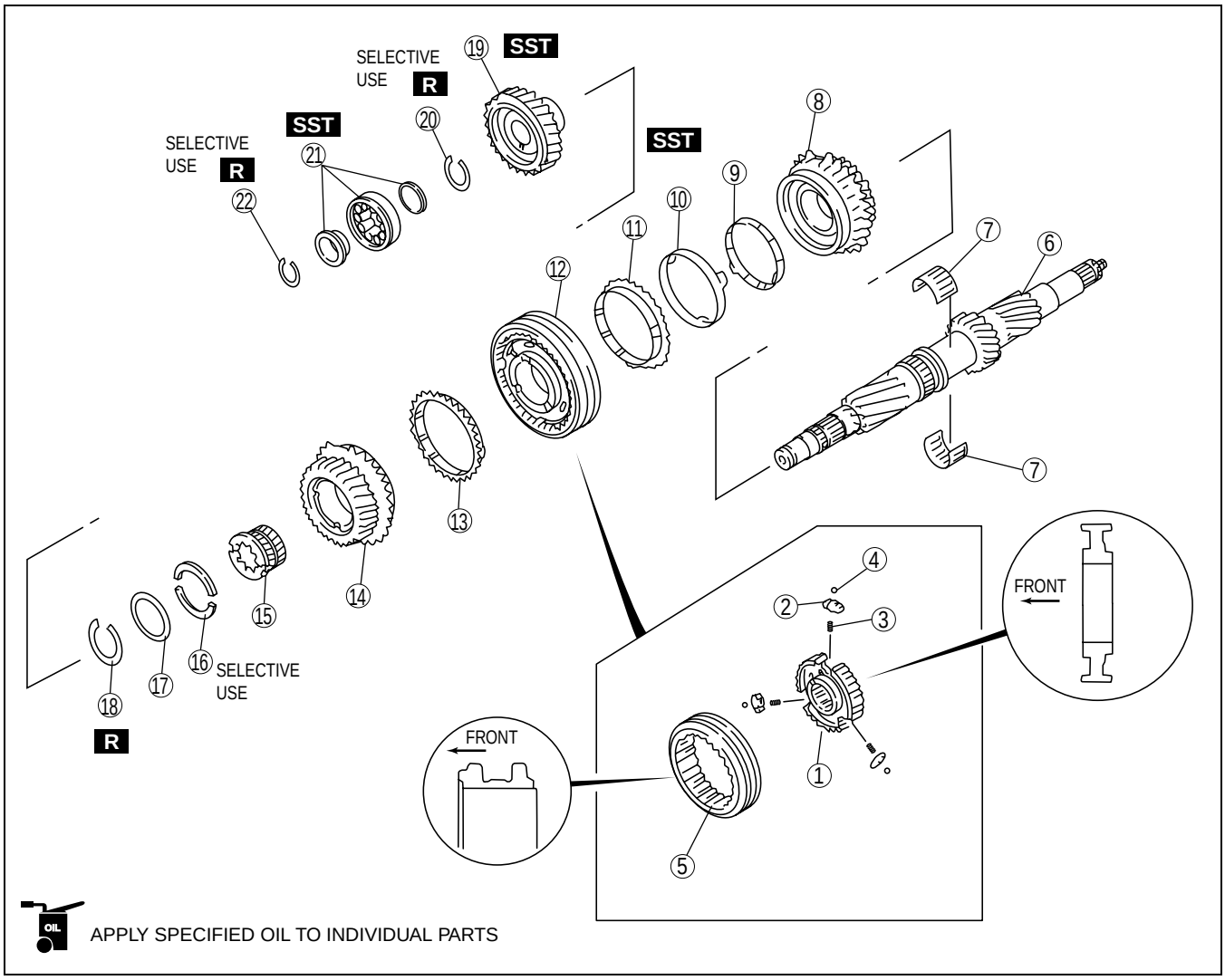

CHU0511M129

1	Clutch hub
2	Synchronizer key
3	Synchronizer key spring
4	Steel ball
5	Clutch hub sleeve
6	Countershaft gear

7	Needle bearing
8	Counter 3rd gear
9	Inner ring
10	Middle ring
11	Synchronizer ring

12	Clutch hub component (3rd/4th) (See 05–11–15 Clutch Hub Component (3rd/4th) Assembly Note.)
13	Synchronizer ring
14	Counter 4th gear
15	Inner race
16	Thrust washer (See 05–11–16 Thrust Washer Assembly Note.)
17	Retaining ring
18	Snap ring
19	Counter drive gear (See 05–11–16 Counter Drive Gear Assembly Note.)
20	Snap ring (friction gear) (See 05–11–17 Snap Ring (Friction Gear) Assembly Note.)
21	Roller bearing (See 05–11–17 Roller Bearing Assembly Note.)
22	Snap ring (roller bearing) (See 05–11–17 Snap Ring (Roller Bearing) Assembly Note.)

Clutch Hub Component (3rd/4th) Assembly Note

1. Securely align the tabs on each ring of the 3rd gear side with the installation hole of the 3rd gear and the key groove of the clutch hub.

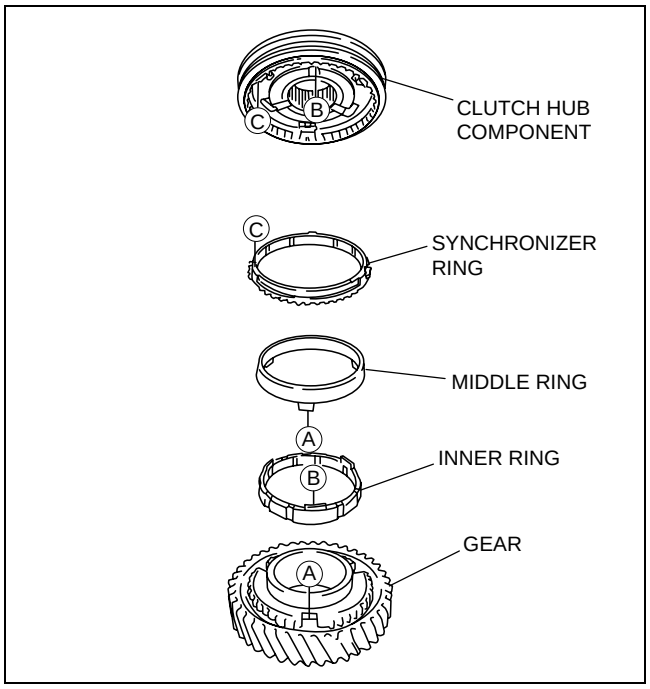

CHU0511M143

2. Securely align the tab on the synchronizer ring of 4th gear side with the key groove of the clutch hub.

Caution

- **Do not damage the synchronizer ring when installing the clutch hub component.**

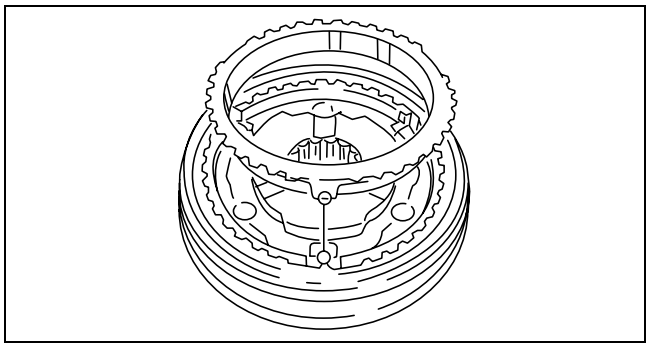

BHJ0511M130

3. Carefully install the clutch hub component (3rd/4th) using the **SSTs** and a press.

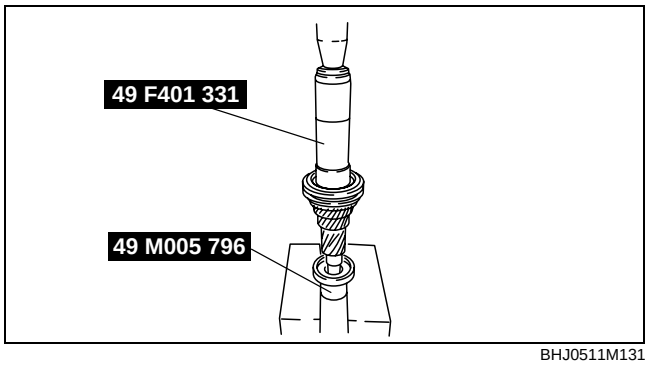

BHJ0511M131

Thrust Washer Assembly Note

1. Install the thrust washer removed during disassembly, and measure the clearance between the thrust washer and the installation groove using a feeler gauge.
2. Select the new thrust washer from the following table so that the clearance measured in Step 1 is within specification, and install it in the countershaft gear with the identification mark facing up.

   Clearance
   0—0.1 mm {0—0.0039 in}

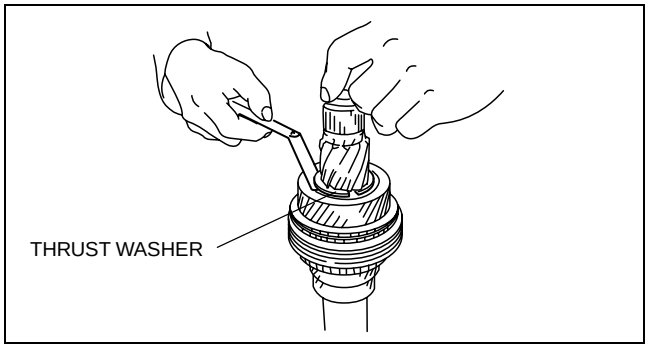

CHU0511M132

Thrust washer size

(mm {in})

Identification mark	Thickness	Identification mark	Thickness
A	3.75 {0.148}	E	3.95 {0.156}
B	3.80 {0.150}	F	4.00 {0.157}
C	3.85 {0.152}	G	4.05 {0.159}
D	3.90 {0.154}	H	4.10 {0.161}

Counter Drive Gear Assembly Note

1. Install the counter drive gear using the **SSTs**.

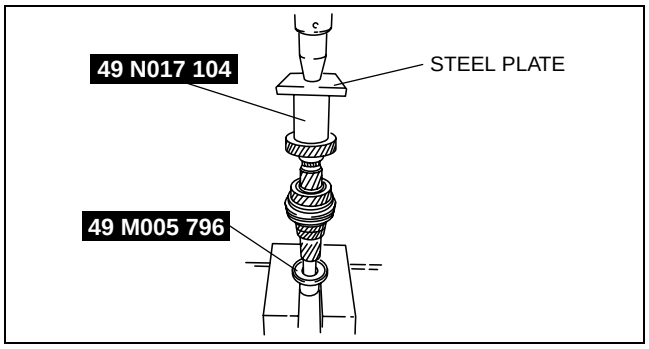

CHU0511M133

Snap Ring (Friction Gear) Assembly Note

1. Install the snap ring removed during disassembly, and measure the clearance between the snap ring and the installation groove using a feeler gauge.
2. Select the new snap ring from the following table so that the clearance measured in Step 1 is within specification, and install it in the countershaft gear.

   Clearance
   0—0.1 mm {0—0.0039 in}

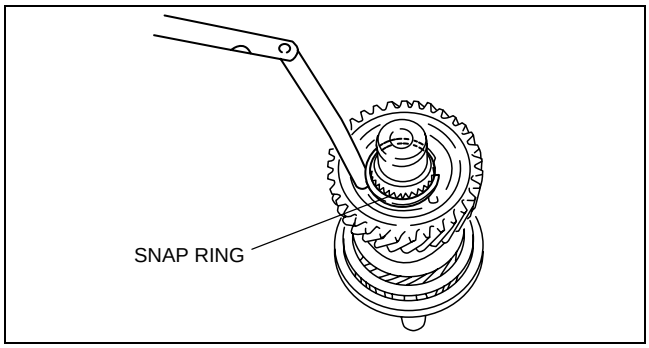

CHU0511M134

Snap ring size

(mm {in})

Identification mark	Thickness	Identification mark	Thickness
A	1.80 {0.071}	D	1.95 {0.077}
B	1.85 {0.073}	E	2.00 {0.079}
C	1.90 {0.075}	F	2.05 {0.081}

Roller Bearing Assembly Note

1. Install the roller bearing using the **SSTs**.

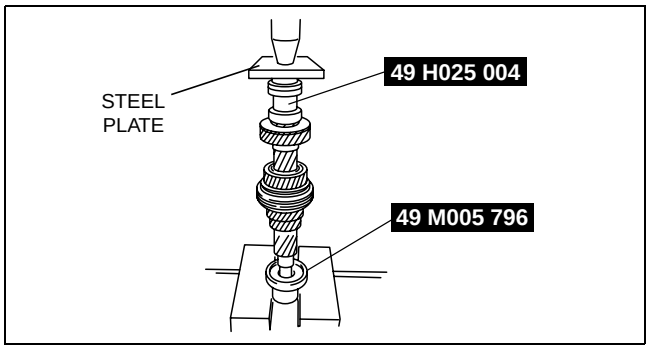

CHU0511M135

Snap Ring (Roller Bearing) Assembly Note

1. Install the snap ring removed during disassembly, and measure the clearance between the snap ring and the installation groove using a feeler gauge.
2. Select the new snap ring from the following table so that the clearance measured in Step 1 is within specification, and install it in the countershaft gear.

   Clearance
   0—0.1 mm {0—0.0039 in}

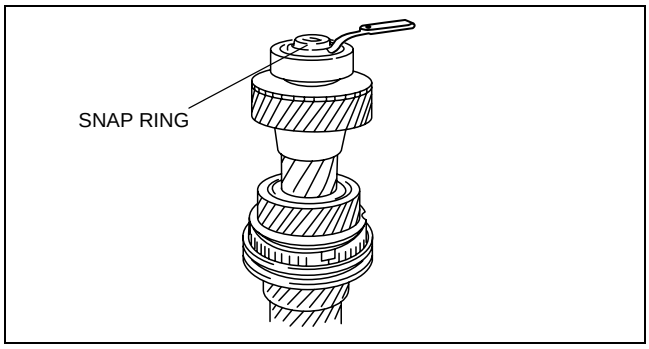

CHU0511M136

Snap ring size

(mm {in})

Identification mark	Thickness	Identification mark	Thickness
A	3.75 {0.148}	E	3.95 {0.156}
B	3.80 {0.150}	F	4.00 {0.157}
C	3.85 {0.152}	G	4.05 {0.159}
D	3.90 {0.154}	H	4.10 {0.161}

MAIN DRIVE GEAR AND MAINSHAFT COMPONENT ASSEMBLY

CHU051117050M05

1. Assemble in the order indicated in the table.
2. Verify the following after assembly.
   (1) The gear rotates smoothly when rotated by hand.
   (2) The synchronizer ring is not stuck.

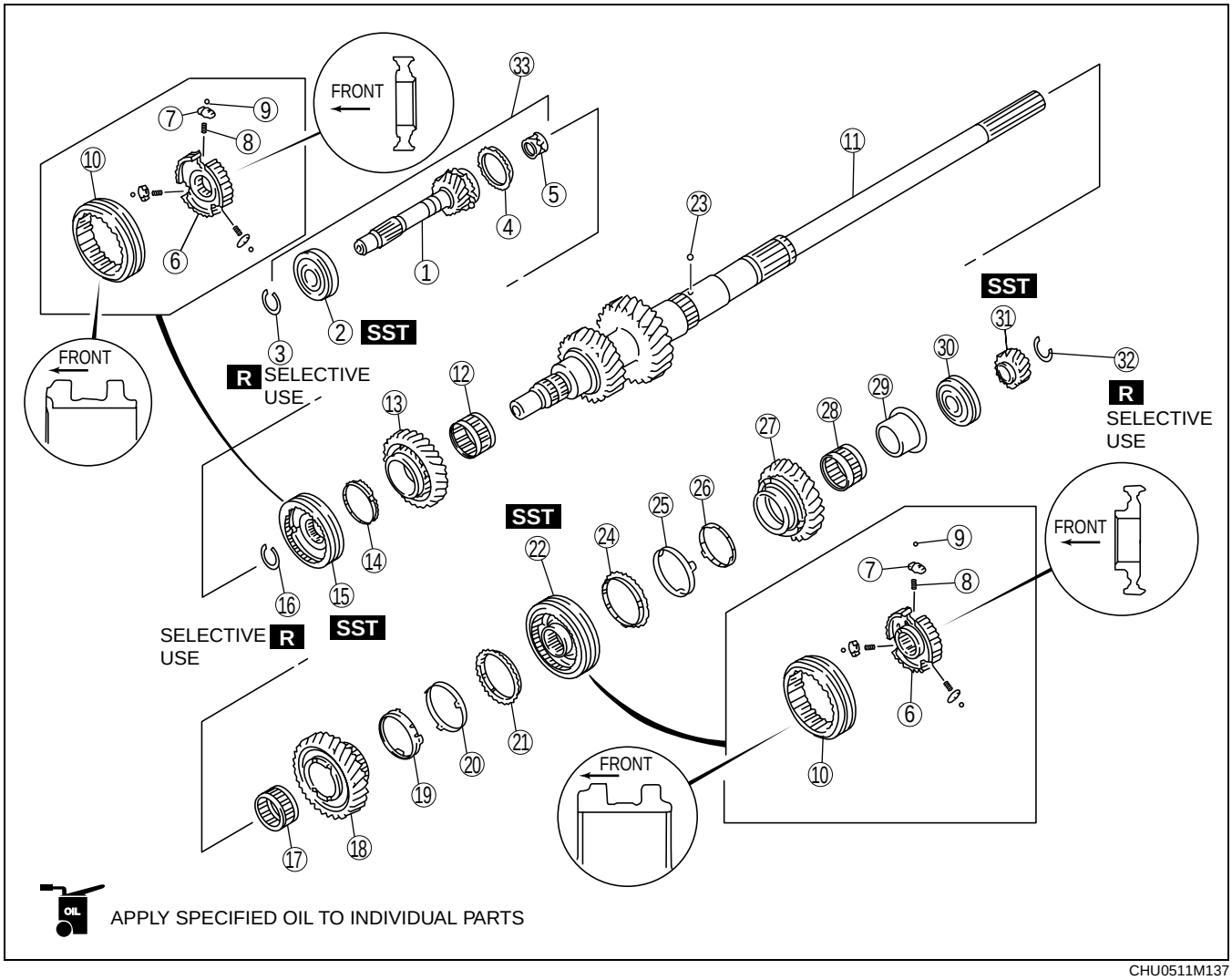

CHU0511M137

1	Main drive gear
2	Bearing (See 05–11–19 Bearing Assembly Note.)
3	Snap ring (bearing) (See 05–11–19 Snap Ring (Bearing) Assembly Note.)
4	Synchronizer ring
5	Needle bearing
6	Clutch hub
7	Synchronizer key
8	Synchronizer key spring
9	Steel ball
10	Clutch hub sleeve
11	Mainshaft
12	Needle bearing
13	Reverse gear
14	Synchronizer ring
15	Clutch hub component (5th/reverse) (See 05–11–19 Clutch Hub Component (5th/Reverse) Assembly Note.)

16	Snap ring (reverse gear) (See 05–11–20 Snap Ring (Reverse Gear) Assembly Note.)
17	Needle bearing
18	2rd gear
19	Inner ring
20	Middle ring
21	Synchronizer ring
22	Clutch hub component (1st/2nd) (See 05–11–20 Clutch Hub Component (1st/2nd) Assembly Note.)
23	Steel ball
24	Synchronizer ring
25	Middle ring
26	Inner ring
27	1st gear
28	Needle bearing
29	Inner race
30	Bearing

31	6th gear (See 05–11–21 6th Gear Assembly Note.)
32	Snap ring (6th gear) (See 05–11–21 Snap Ring (6th Gear) Assembly Note.)
33	Main drive gear component

Bearing Assembly Note

1. Install the bearing using the **SSTs**.

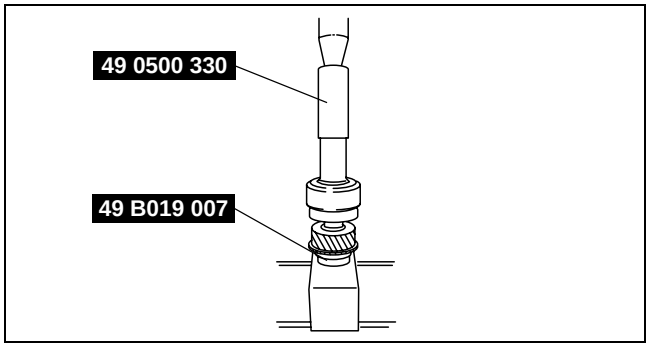

BHJ0511M138

Snap Ring (Bearing) Assembly Note

1. Install the snap ring removed during disassembly, and measure the clearance between the snap ring and the installation groove using a feeler gauge.
2. Select the new snap ring from the following table so that the clearance measured in Step 1 is within specification, and install it in the main drive gear.

   Clearance
   0—0.1 mm {0—0.0039 in}

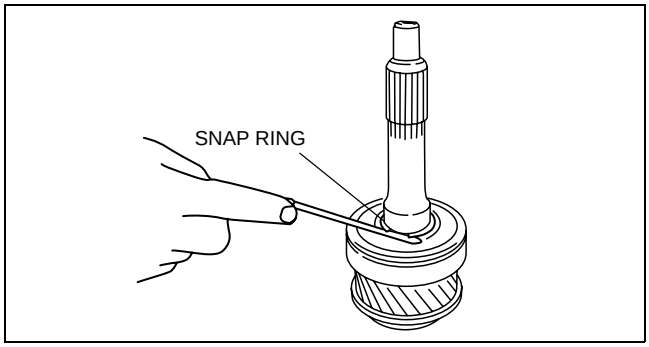

CHU0511M139

Snap Ring size

(mm {in})

Identification mark	Thickness	Identification mark	Thickness
0	1.95 {0.077}	3	2.10 {0.083}
1	2.00 {0.079}	4	2.15 {0.085}
2	2.05 {0.081}	5	2.20 {0.087}

Clutch Hub Component (5th/Reverse) Assembly Note

1. Securely align the tab on the synchronizer ring with the key groove of the clutch hub.

   Caution
   - **Do not damage the synchronizer ring when installing the clutch hub component.**

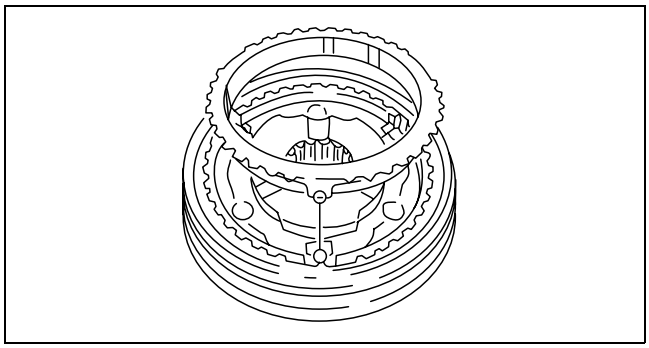

BHJ0511M140

2. Carefully install the clutch hub component (5th/reverse) using the **SSTs** and a press.

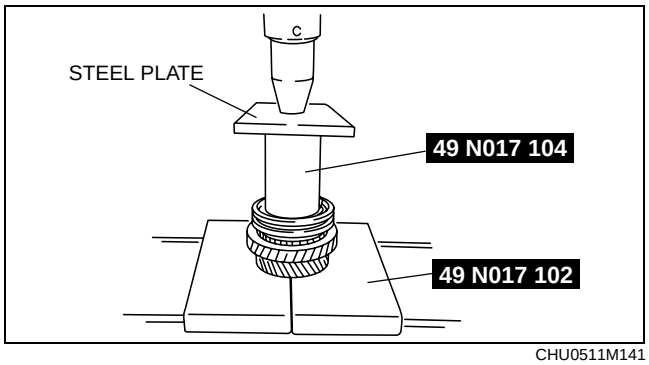

CHU0511M141

Snap Ring (Reverse Gear) Assembly Note

1. Install the snap ring removed during disassembly, and measure the clearance between the snap ring and the installation groove using a feeler gauge.
2. Select the new snap ring from the following table so that the clearance measured in Step 1 is within specification, and install it in the mainshaft.

   Clearance
   0—0.1 mm {0—0.0039 in}

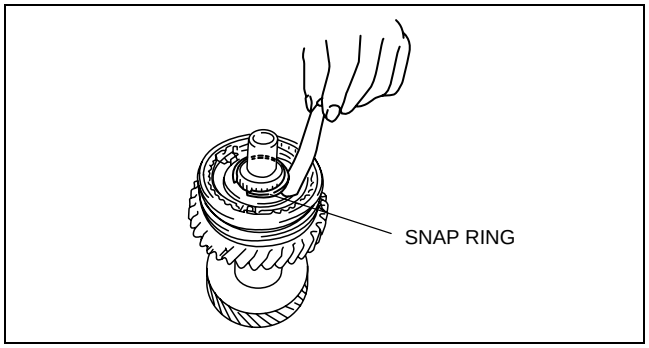

CHU0511M142

Snap Ring size

(mm {in})

Identification mark	Thickness	Identification mark	Thickness
A	1.80 {0.071}	D	1.95 {0.077}
B	1.85 {0.073}	E	2.00 {0.079}
C	1.90 {0.075}	F	2.05 {0.081}

Clutch Hub Component (1st/2nd) Assembly Note

1. Securely align the tab on each ring with the installation hole of the 2nd gear and the key groove of the clutch hub.

   Caution
   - **Do not damage each synchronizer ring when installing the clutch hub component.**

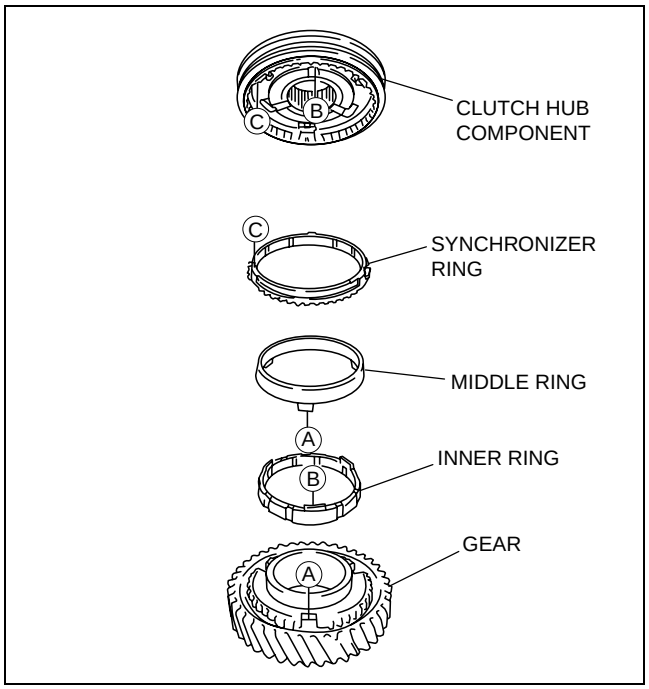

CHU0511M143

2. Carefully install the clutch hub component (1st/2nd) using the **SSTs** and a press.

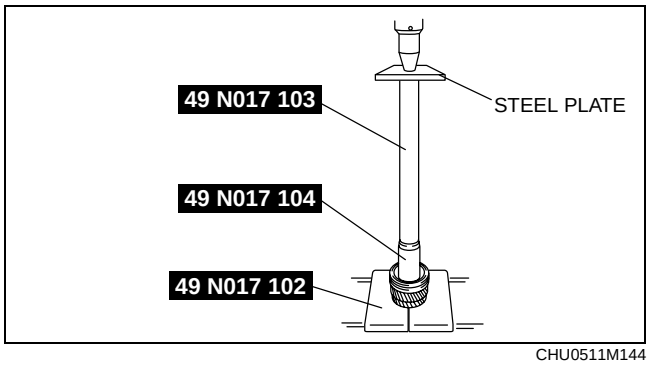

CHU0511M144

6th Gear Assembly Note

1. Install the bearing and 6th gear using the **SSTs** and a press.

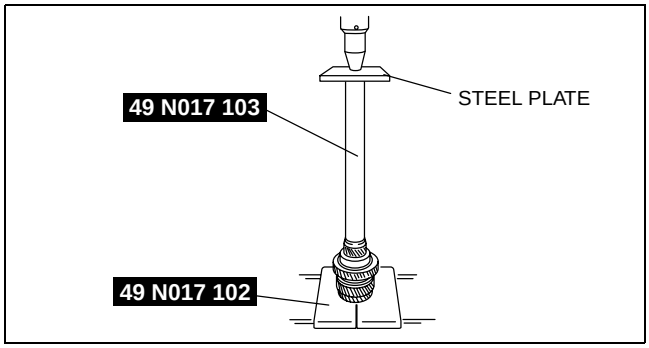

CHU0511M145

Snap Ring (6th Gear) Assembly Note

1. Install the snap ring removed during disassembly, and measure the clearance between the snap ring and the installation groove using a feeler gauge.
2. Select the new snap ring from the following table so that the clearance measured in Step 1 is within specification, and install it in the mainshaft.

   Clearance
   0—0.11 mm {0—0.0043 in}

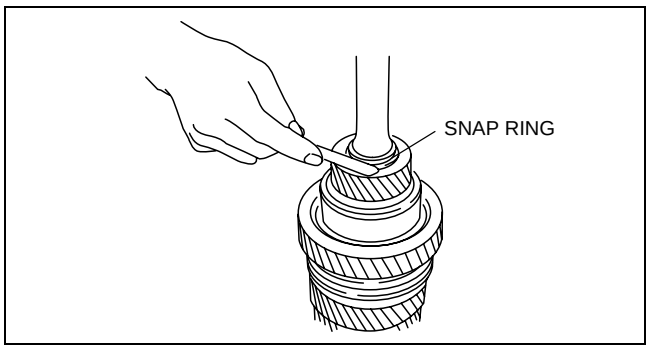

CHU0511M146

Snap Ring size

(mm {in})

Identification mark	Thickness	Identification mark	Thickness
A	2.67 {0.105}	G	3.03 {0.119}
B	2.73 {0.107}	H	3.09 {0.122}
C	2.79 {0.110}	J	3.15 {0.124}
D	2.85 {0.122}	K	3.21 {0.126}
E	2.91 {0.115}	L	3.27 {0.129}
F	2.97 {0.117}	–	–

CLUTCH HOUSING COMPONENT, SHIFT FORK AND SHIFT ROD COMPONENT ASSEMBLY

CHU051117030M02

1. Assemble in the order indicated in the table.

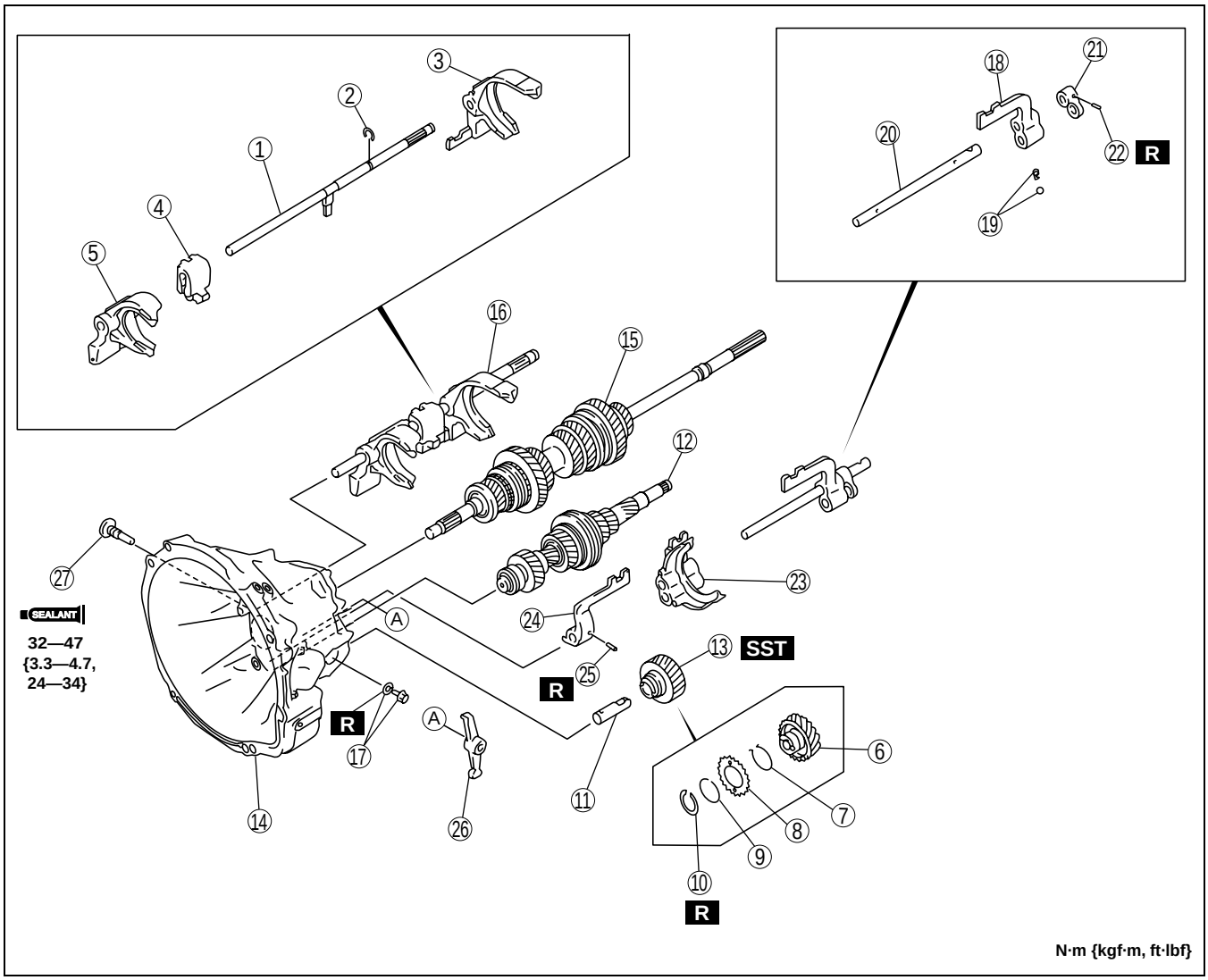

CHU0511M147

1	Shift rod
2	Snap ring
3	1st/2nd shift fork
4	Interlock sleeve
5	5th/reverse shift fork
6	Reverse idler gear
7	Torsion spring
8	Friction gear
9	Spacer
10	Snap ring
11	Reverse idler shaft
12	Countershaft component
13	Reverse idler gear component (See 05–11–23 Reverse Idler Gear Component Assembly Note.)
14	Clutch housing (See 05–11–23 Clutch Housing Assembly Note.)
15	Main drive gear and mainshaft component

16	Shift fork and shift rod component (mainshaft)
17	Bolt and gasket (See 05–11–23 Bolt and Gasket Assembly Note.)
18	Shift arm (5th)
19	Pressure spring, steel ball
20	Shift rod
21	Stopper block
22	Spring pin
23	3rd/4th shift fork (See 05–11–24 3rd/4th Shift Fork and Shift Arm (Reverse) Assembly Note.)
24	Shift arm (reverse) (See 05–11–24 3rd/4th Shift Fork and Shift Arm (Reverse) Assembly Note.)
25	Spring pin
26	5th/reverse counter lever (See 05–11–24 5th/Reverse Counter Lever Assembly Note.)
27	Crank lever shaft

Reverse Idler Gear Component Assembly Note

1. Turn the friction gear counterclockwise by hand, and align the reverse idler gear hole with the friction gear.
2. Insert the **SST** (49 N017 204) through the holes from the reverse idler gear side, and secure the friction gear.

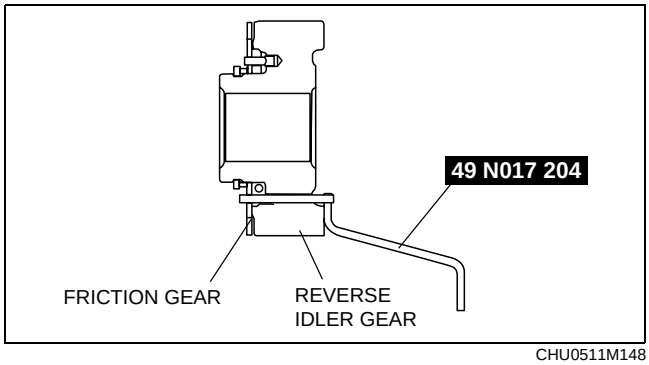

CHU0511M148

Clutch Housing Assembly Note

1. Install the countershaft component and the reverse idler gear component installed with the **SSTs** and the main drive gear and mainshaft component, shift fork and shift rod component (mainshaft) onto the clutch housing together.
2. Remove the **SSTs** installed to the countershaft component and the reverse idler gear component after installing.

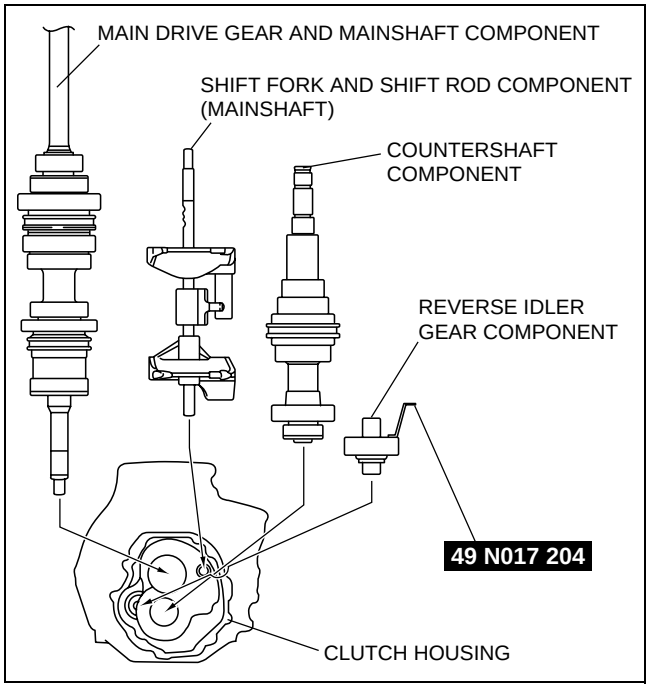

CHU0511M149

Bolt and Gasket Assembly Note

1. Install a new gasket and bolt into the clutch housing and tighten temporarily.
2. Fully tighten the new gasket and bolt after installing the transmission case.

3rd/4th Shift Fork and Shift Arm (Reverse) Assembly Note

1. Temporarily install the 3rd/4th shift fork and shift arm (reverse) into the clutch housing.
2. Pass the shift rod through the 3rd/4th shift fork and shift arm (reverse).
3. Tap a new spring pin into the shift arm (reverse) head.

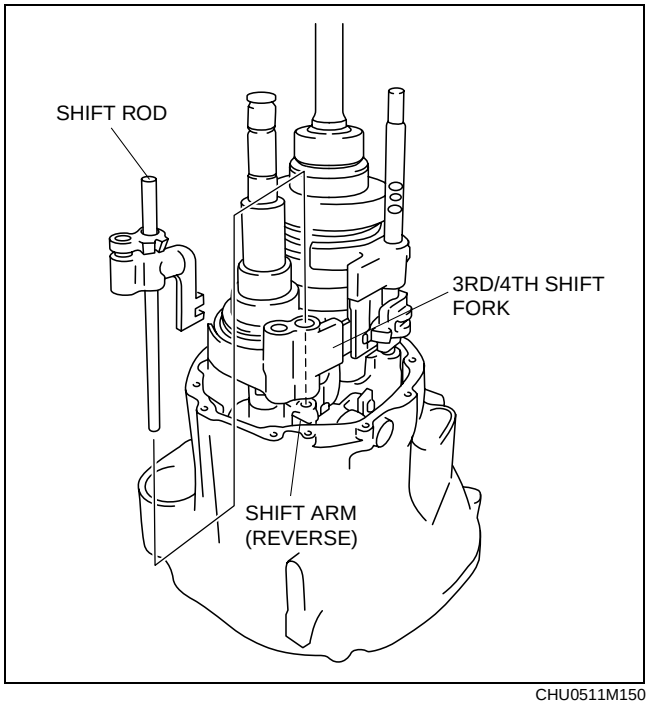

CHU0511M150

5th/Reverse Counter Lever Assembly Note

1. Install the 5th/reverse counter lever as shown in the figure, and secure it with the crank lever shaft.

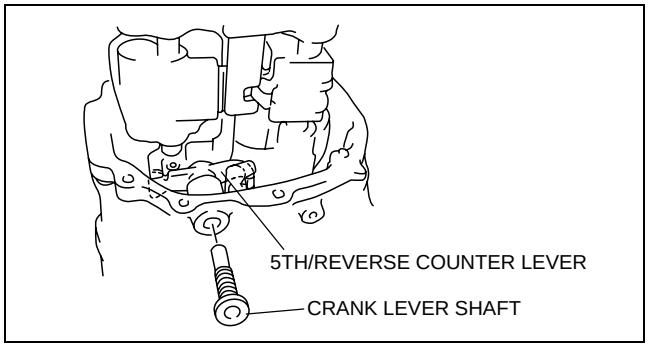

CHU0511M151

TRANSMISSION CASE AND 6TH GEAR COMPONENT ASSEMBLY

CHU051117010M05

1. Assemble in the order indicated in the table.
2. Verify the following after assembly.
   (1) The gear rotates smoothly when rotated by hand.
   (2) The synchronizer is not stuck.

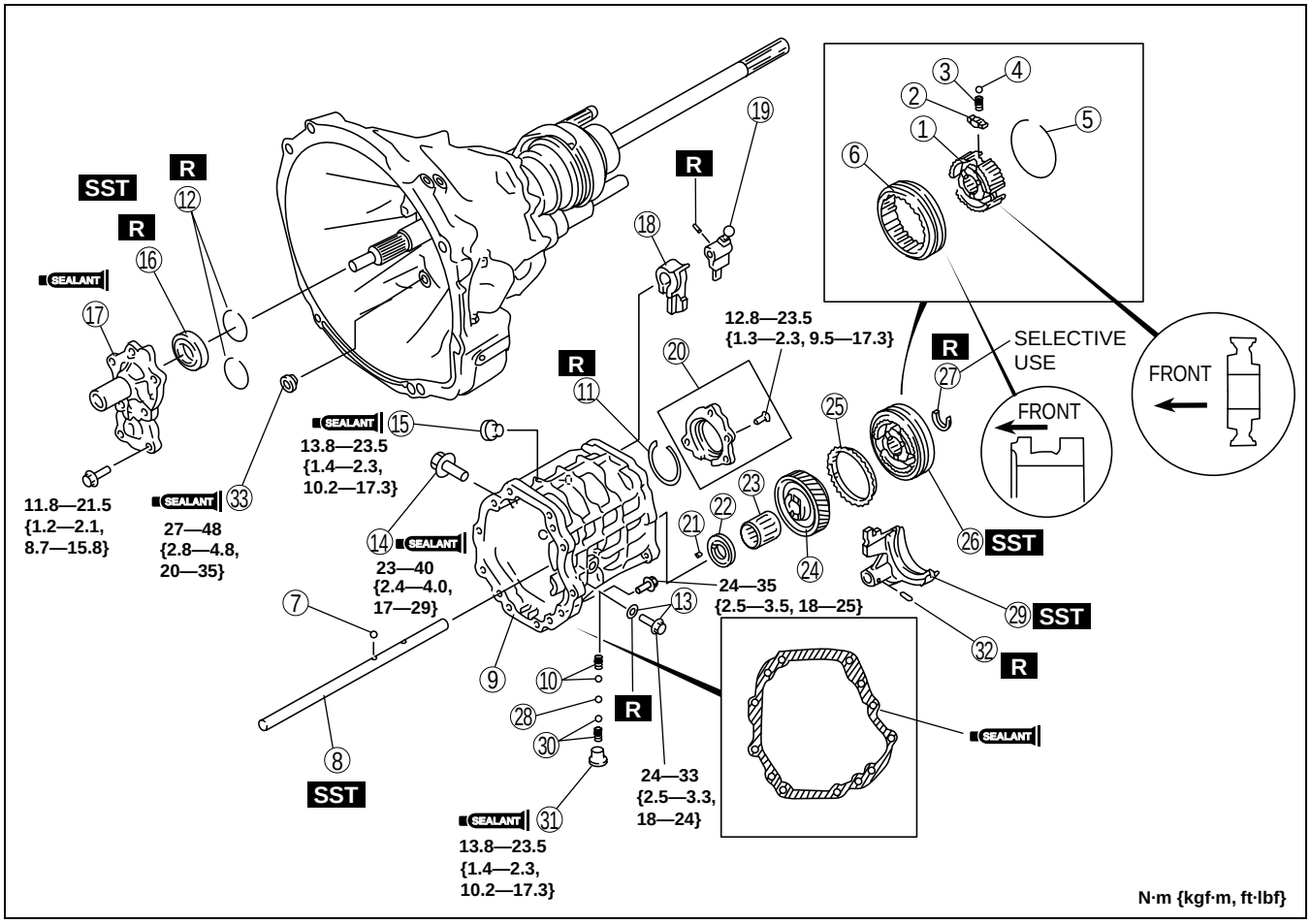

CHU0511M152

1	Clutch hub
2	Synchronizer key
3	Synchronizer key spring
4	Steel ball
5	Retaining ring
6	Clutch hub sleeve
7	Steel ball
8	Shift rod (See 05–11–26 Shift Rod Assembly Note.)
9	Transmission case (See 05–11–26 Transmission Case Assembly Note.)
10	Pressure spring, steel ball
11	Snap ring (rear)
12	Snap ring (front)
13	Bolt and gasket (See 05–11–27 Bolt and Gasket Assembly Note.)
14	Bolt
15	Plug
16	Oil seal (See 05–11–27 Oil Seal Assembly Note.)
17	Front cover

18	Interlock sleeve
19	Inner shift lever (See 05–11–28 Inner Shift Lever Assembly Note.)
20	Bearing cover component
21	Pin
22	Thrust washer
23	Needle bearing
24	6th gear
25	Synchronizer ring
26	Clutch hub component (6th) (See 05–11–28 Clutch Hub Component (6th) Assembly Note.)
27	Snap ring (See 05–11–28 Snap Ring Assembly Note.)
28	Steel ball
29	6th shift fork (See 05–11–29 6th Shift Fork Assembly Note.)
30	Steel ball, pressure spring
31	Plug
32	Spring pin
33	Plug (See 05–11–29 Plug Assembly Note.)

Shift Rod Assembly Note

1. Install the **SST** into the clutch housing.
2. Install the steel ball into the shift arm (5th).
3. Taking care so that the steel ball does not drop out, carefully insert the shift rod until it contacts the **SST** installed to the clutch housing.
4. Turn the notch of the shift rod end toward the shift rod A.

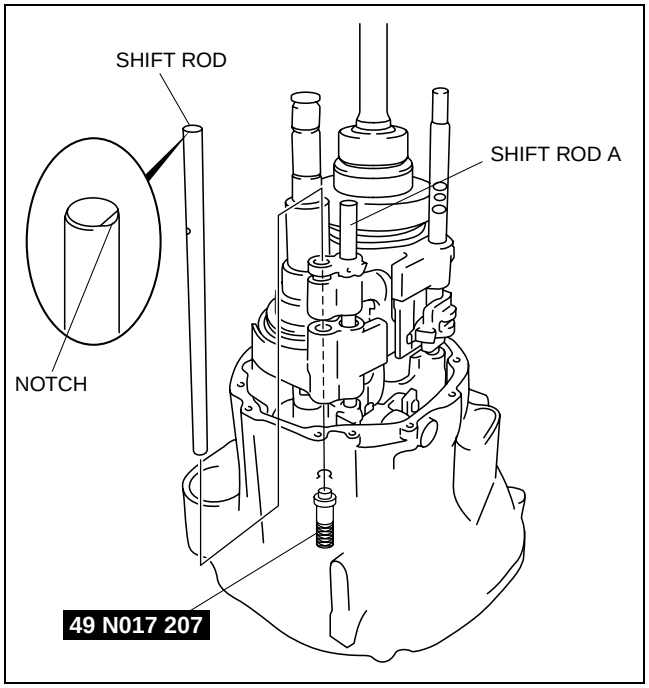

CHU0511M153

Transmission Case Assembly Note

1. Set the shift operation system to the neutral position.

   Note
   - If the countershaft center bearing interferes with the transmission case when installing, pry the roller of the bearing lightly using a screw driver covered with a rag.

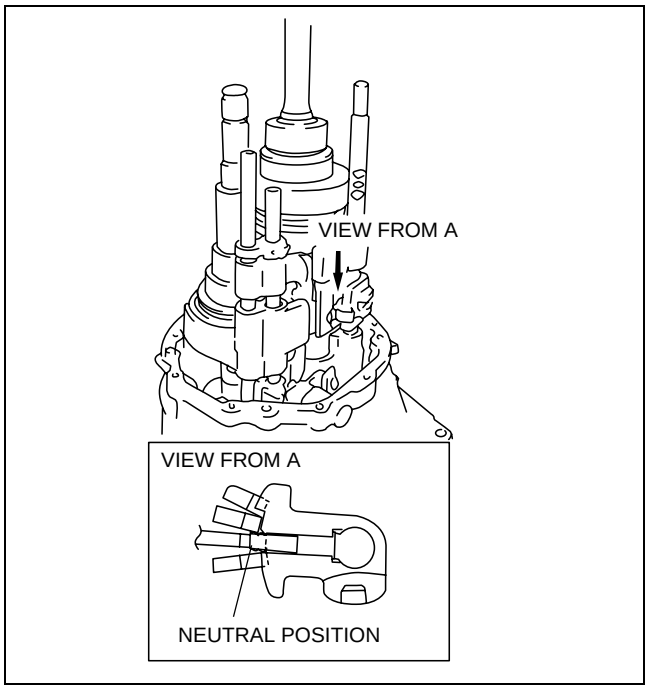

CHU0511M154

2. Install the pressure spring and steel ball into the transmission case, then install the transmission case onto the clutch housing pressing with a pin punch so that the steel ball does not spring out.

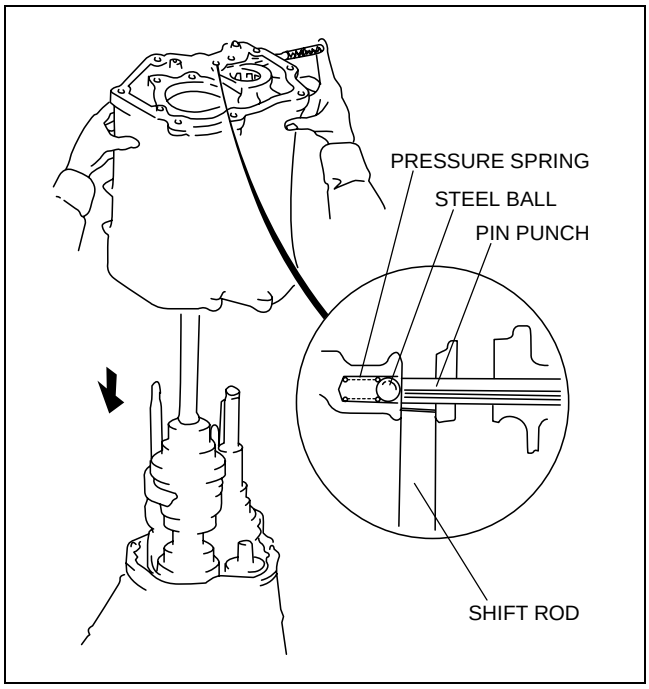

CHU0511M158

Bolt and Gasket Assembly Note

1. Tighten the transmission case mounting bolt, then tighten the new gasket and bolt A (for the reverse idler shaft).
2. Tighten bolt B tightened temporarily on the clutch housing.

   Tightening torque (Bolt A and B)
   24—33 N·m {2.5—3.3 kgf·m, 18—24 ft·lbf}

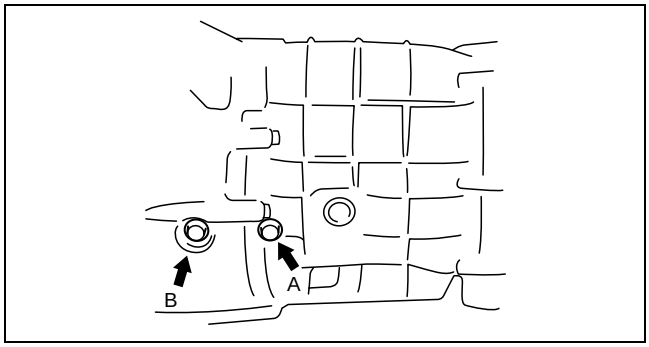

BHJ0511M155

Oil Seal Assembly Note

1. Install the new oil seal in the front cover using the **SSTs** and a hammer.

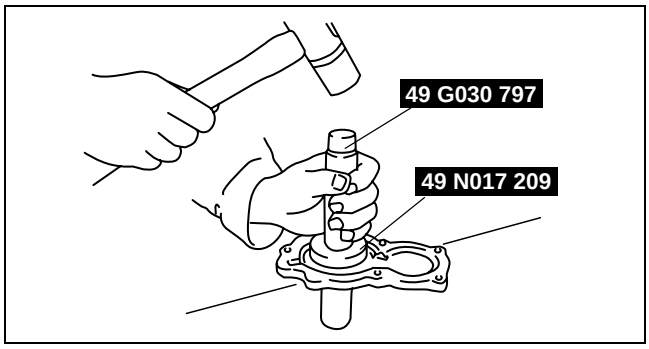

BHJ0511M156

Inner Shift Lever Assembly Note

1. Install the inner shift lever using a suitable pipe and a hammer.

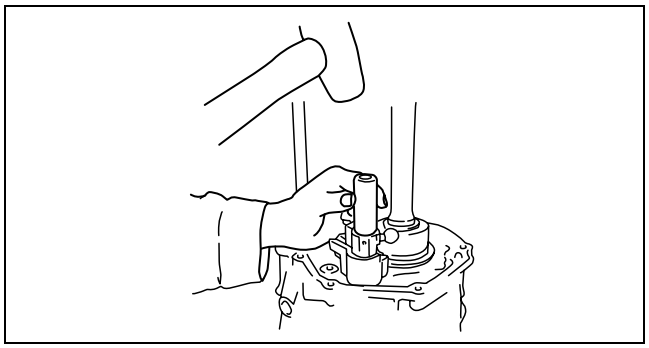

BHJ0511M157

Clutch Hub Component (6th) Assembly Note

1. Securely align the tab on the synchronizer ring with the key groove of the clutch hub.

   Caution
   - **Do not damage the synchronizer ring when installing the clutch hub component.**

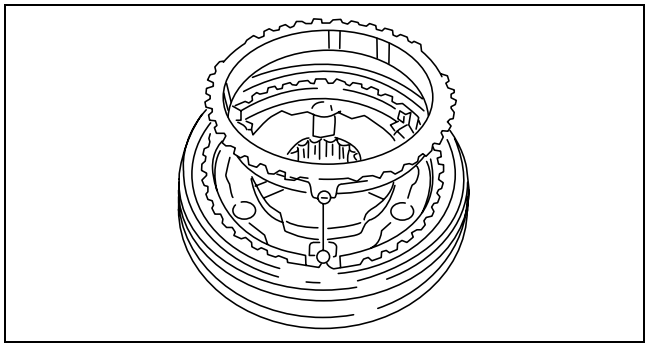

BHJ0511M130

2. Carefully install the clutch hub component (6th) using the **SST**.

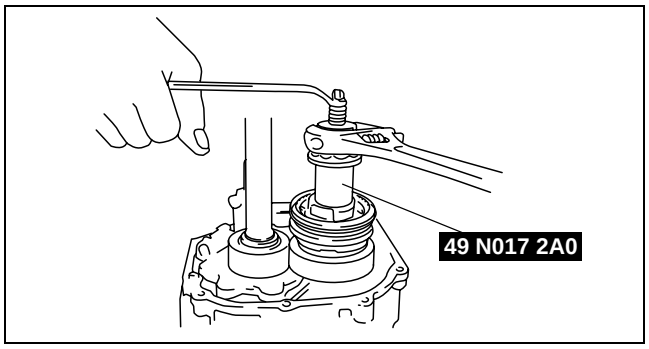

BHJ0511M159

Snap Ring Assembly Note

1. Install the snap ring removed during disassembly, and measure the clearance between the snap ring and the installation groove using a feeler gauge.
2. Select the new snap ring from the following table so that the clearance measured in Step 1 is within specification, and install it in the countershaft gear.

   Clearance
   0—0.1 mm {0—0.0039 in}

Snap ring size

(mm {in})

Identification mark	Thickness	Identification mark	Thickness
A	2.80 {0.110}	D	2.95 {0.116}
B	2.85 {0.112}	E	3.00 {0.118}
C	2.90 {0.114}	F	3.05 {0.120}

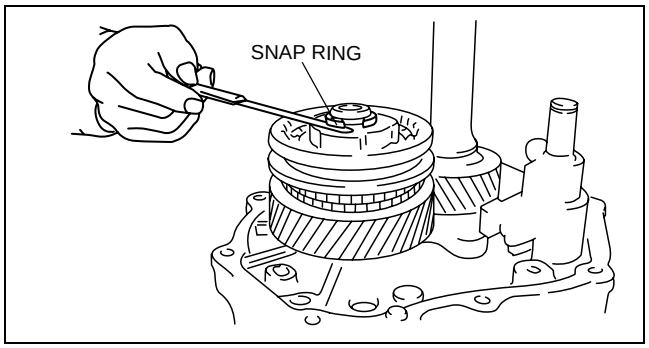

CHU0511M160

6th Shift Fork Assembly Note

1. Install the 6th shift fork in the clutch hub component.
2. Insert the steel ball from the transmission case.
3. Pass the **SST** through the 6th shift fork and install in the shift rod.
4. Pull the **SST** up, then install the steel ball, pressure spring and plug from outside of the transmission case and secure the shift rod.

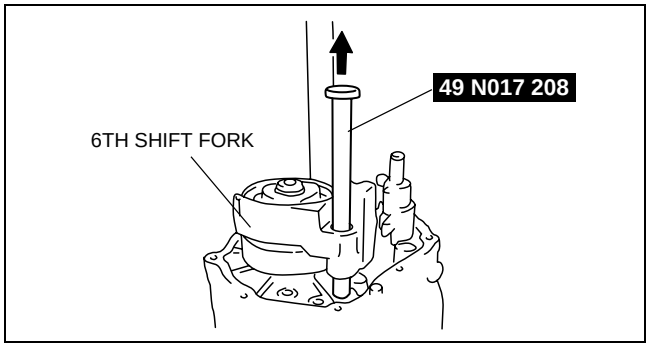

CHU0511M161

Plug Assembly Note

1. Remove the **SST** installed to the clutch housing, and install the plug.

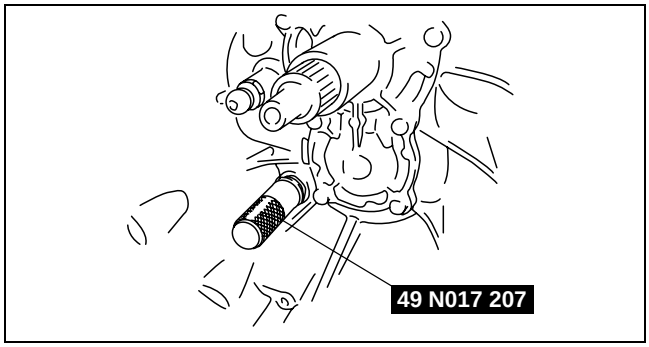

BHJ0511M162

EXTENSION HOUSING COMPONENT ASSEMBLY

CHU051117010M06

Note

- Do not attempt to shift the transmission until after the extension housing is properly installed.

1. Assemble in the order indicated in the table.

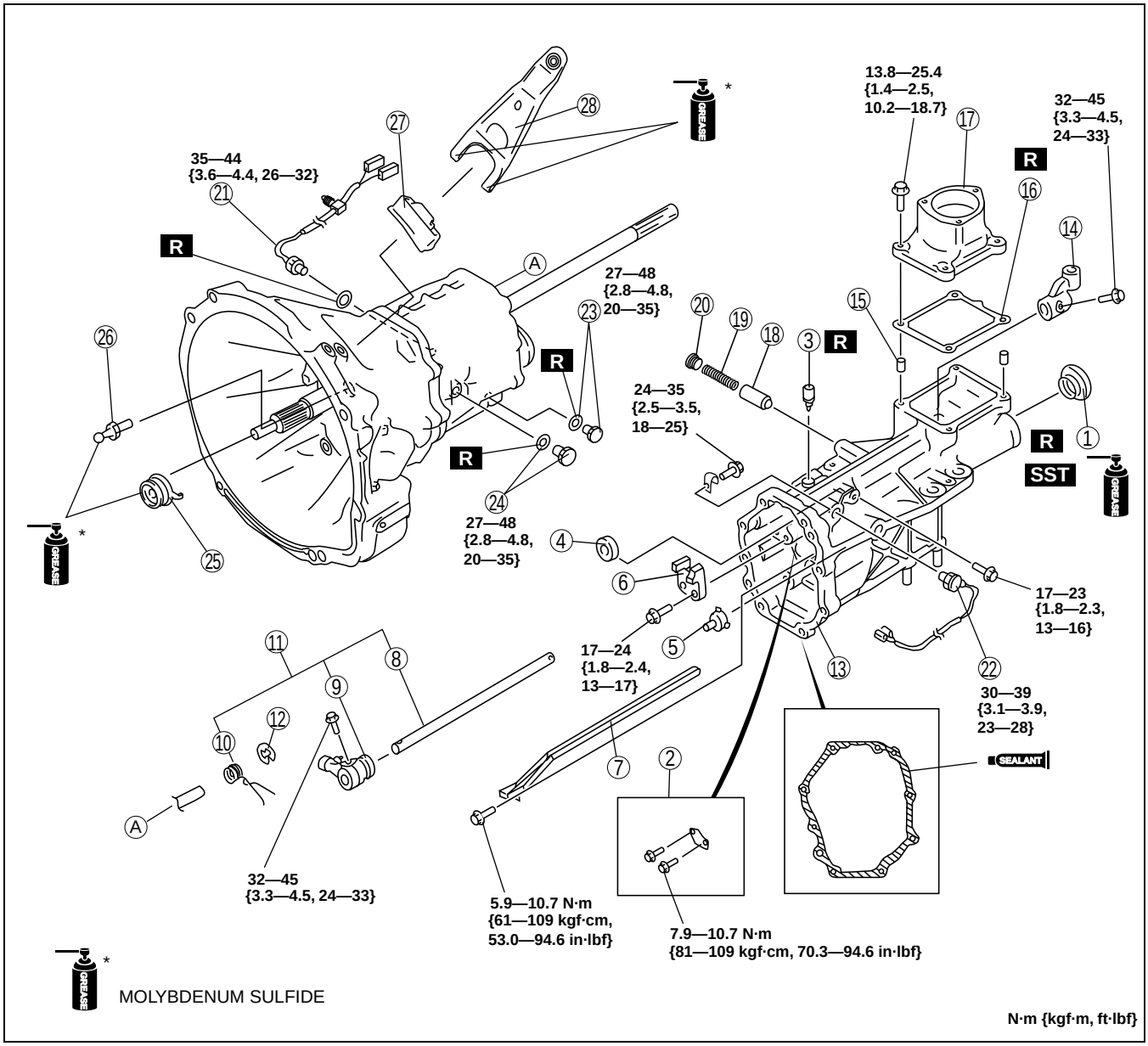

CHU0511M163

1	Oil seal (See 05–11–31 Oil Seal Assembly Note.)
2	Baffle plate
3	Breather
4	Lever support
5	Oil funnel
6	Stopper block
7	Oil passage
8	Shift rod
9	Shift lever
10	Torsion spring (See 05–11–31 Torsion Spring Assembly Note.)
11	Shift rod and shift lever component

12	Retaining ring
13	Extension housing component
14	Control rod end
15	Tubular pin
16	Gasket
17	Control case
18	Push pin component
19	Pressure spring
20	Plug
21	Back-up light switch
22	Neutral switch
23	Drain plug, gasket
24	Filler plug, gasket

25	Clutch release collar
26	Pivot pin

27	Dust cover
28	Clutch release fork

Oil Seal Assembly Note

1. Install a new oil seal in the extension housing using the **SSTs** and a hammer.

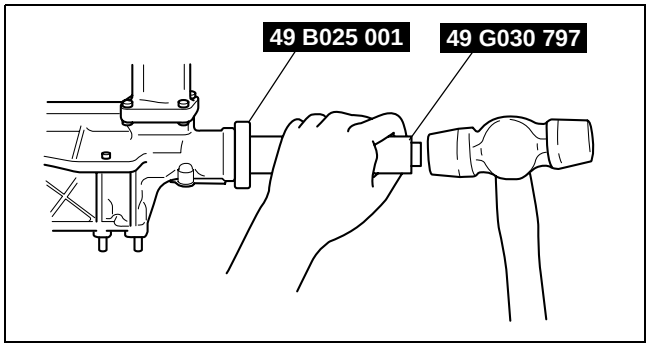

BHJ0511M167

Torsion Spring Assembly Note

1. Install the torsion spring to the shift lever as shown in the figure.

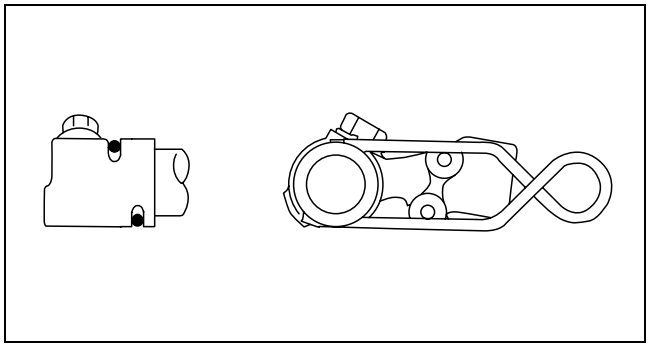

BHJ0511M166

05–50 TECHNICAL DATA

TECHNICAL DATA 05–50–1

TECHNICAL DATA

CHU055001029M01

Item			Specification
Manual transmission type			Y16M-D
Transmission oil	Type		API Service GL-4 or GL-5
	Viscosity	All-season	SAE 75W-90
	Capacity	(L {US qt, Imp qt})	1.75 {1.85, 1.54}
Drive gear thrust clearance (mm {in})	1st		0.15—0.40 {0.006—0.015}
	2nd		0.10—0.45 {0.004—0.017}
	3rd		0.10—0.35 {0.004—0.013}
	4th		0.10—0.35 {0.004—0.013}
	6th		0.10—0.40 {0.004—0.015}
	Reverse		0.10—0.45 {0.004—0.017}
Drive gear radial clearance (mm {in})	1st		0.015—0.066 {0.0006—0.0025}
	2nd		0.015—0.066 {0.0006—0.0025}
	3rd		0.015—0.068 {0.0006—0.0026}
	4th		0.065—0.115 {0.0026—0.0045}
	5th (drive gear)		0.029—0.072 {0.0012—0.0028}
	6th		0.015—0.068 {0.0006—0.0026}
	Reverse		0.015—0.066 {0.0006—0.0025}
Reverse idler gear radial clearance (mm {in})			0.040—0.082 {0.0016—0.0032}
Clearance between synchronizer ring and flank surface of gear (mm {in})	1st, 2nd, 3rd	Inner ring	0.98—1.62 {0.04—0.06}
		Middle ring	0.68—1.92 {0.03—0.07}
		Synchronizer ring	0.88—1.72 {0.04—0.06}
	4th, 5th		0.80—1.60 {0.04—0.06}
	6th, Reverse		0.88—1.52 {0.04—0.05}
Mainshaft maximum runout (mm {in})			0.03 {0.0012}
Countershaft maximum runout (mm {in})			0.03 {0.0012}
Clearance between clutch hub sleeve and shift fork (mm {in})			0.15—0.35 {0.006—0.013}
Clearance between 4th gear inner race and thrust washer (mm {in})			0—0.1 {0—0.0039}
Clearance between counter drive gear and snap ring (mm {in})			0—0.1 {0—0.0039}
Clearance between roller bearing (countershaft) and snap ring (mm {in})			0—0.1 {0—0.0039}
Clearance between bearing (main drive gear) and snap ring (mm {in})			0—0.1 {0—0.0039}
Clearance between clutch hub component (5th/reverse) and snap ring (mm {in})			0—0.1 {0—0.0039}
Clearance between 6th gear and snap ring (mm {in})			0—0.11 {0—0.0043}
Clearance between clutch hub component (6th) and snap ring (mm {in})			0—0.1 {0—0.0039}

05–60 SERVICE TOOLS

SERVICE TOOLS 05–60–1

SERVICE TOOLS

CHU056001029M01

49 N017 2A1 Clutch hub puller set 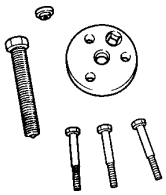	49 G030 370 Removing plate 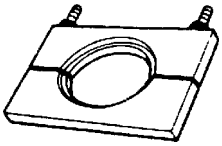	49 N017 101 Plate 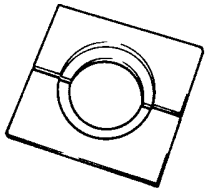
49 B032 317 Bearing and oil seal remover 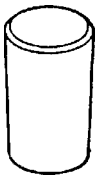	49 H027 002 Bearing remover 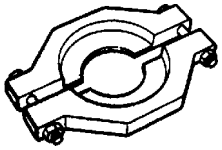	49 N017 102 Plate 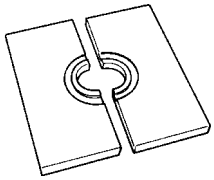
49 F401 331 Body 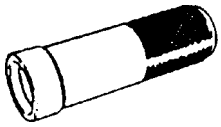	49 M005 796 Body 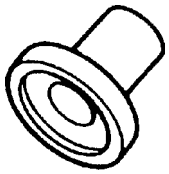	49 N017 104 Joint pipe 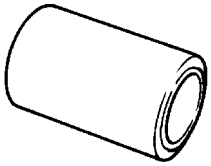
49 H025 004 Bearing installer set 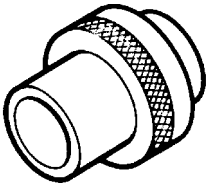	49 0500 330 Bearing installer set 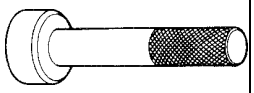	49 B019 007 Preload adapter 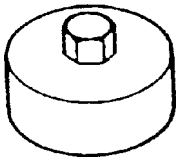
49 N017 103 Gear installer 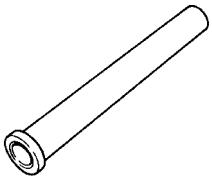	49 N017 204 Setting plate 	49 N017 207 Shaft stopper 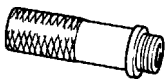
49 G030 797 Handle 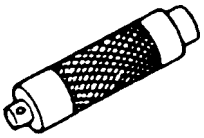	49 N017 209 Oil seal installer 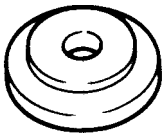	49 N017 2A0 Clutch hub installer set 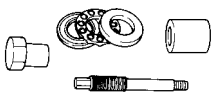
49 N017 208 Guide pin 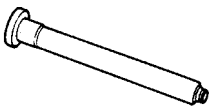	49 B025 001 Body 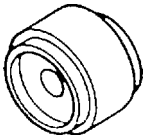	—