BODY DIMENSION DRAWINGS
ENGINE COMPARTMENT

(Three-Dimensional Distance)

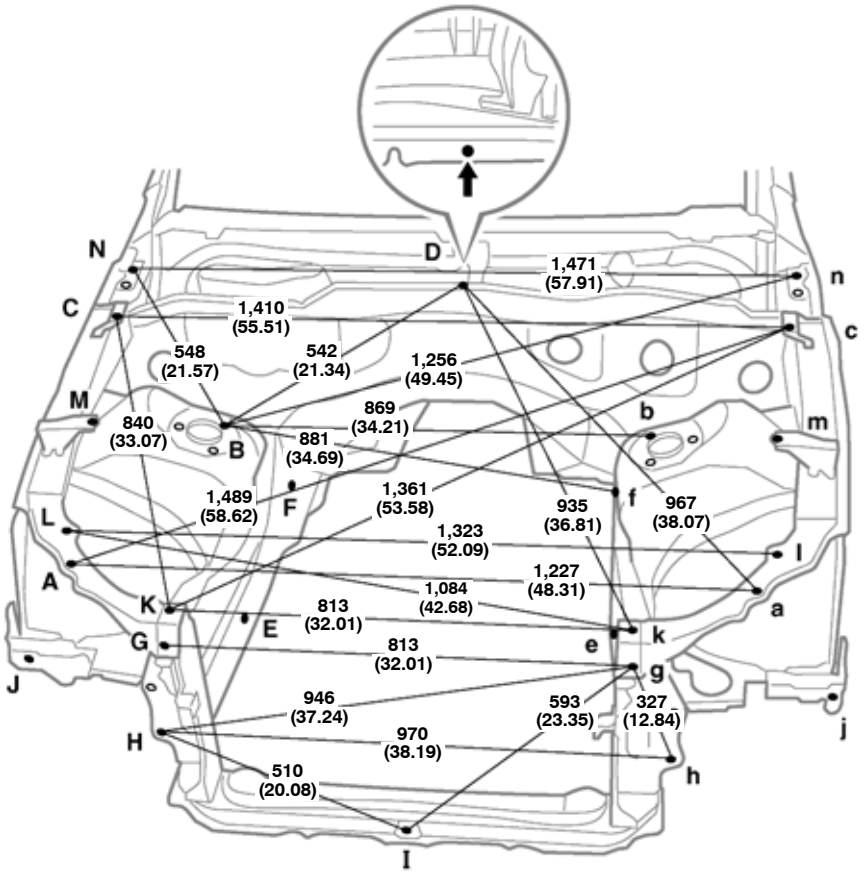

Vehicle Dimensions

A-C or a-c	A-N or a-n	A-n or a-N	C-N or c-n	C-n or c-N	D-E or D-e	D-f or D-F	J-j
698 (27.48)	915 (36.02)	1,625 (63.98)	221 (8.70)	1,457 (57.36)	803 (31.61)	614 (24.17)	1,501 (59.09)

K-N or k-n	K-n or k-N	L-N or l-n	L-n or l-N	M-m	M-N or m-n	M-n or m-N
1,053 (41.46)	1,518 (59.76)	815 (32.09)	1,616 (63.62)	1,328 (52.28)	561 (22.09)	1,507 (59.33)

Height From Imaginary Standard Line

A, a	K, k	N, n
628 (24.72)	611 (24.06)	745 (29.33)

HINT: For symbols, capital letters indicate right side of vehicle, small letters indicate left side of vehicle (seen from rear).

mm (in.)

Symbol	Name	Hole dia.	Symbol	Name	Hole dia.
A, a	Front fender installation nut	M6 (0.24)	I	Hood lock support brace installation nut	M6 (0.24)
B, b	Front spring support hole inner-rear	ø 13 (0.51)	J, j	Radiator support to front fender bracket standard hole	ø 10 (0.39)
C, c	Front fender installation nut	M6 (0.24)			
D	Cowl top inner panel center mark	—	K, k	Radiator upper support installation nut	M6 (0.24)
E, e	Front side member standard hole	ø 15 (0.59)	L, l	Radiator upper front support standard hole	ø 10 (0.39)
F, f	Front side member standard hole	ø 15 (0.59)	M, m	Front fender installation nut	M6 (0.24)
G, g	Radiator upper support installation nut	M6 (0.24)	N, n	Hood hinge installation nut-rear	M8 (0.31)
H, h	Crush box installation nut	M14 (0.55)	—	—	—

BODY OPENING AREAS (Side View-Front)

(Three-Dimensional Distance)

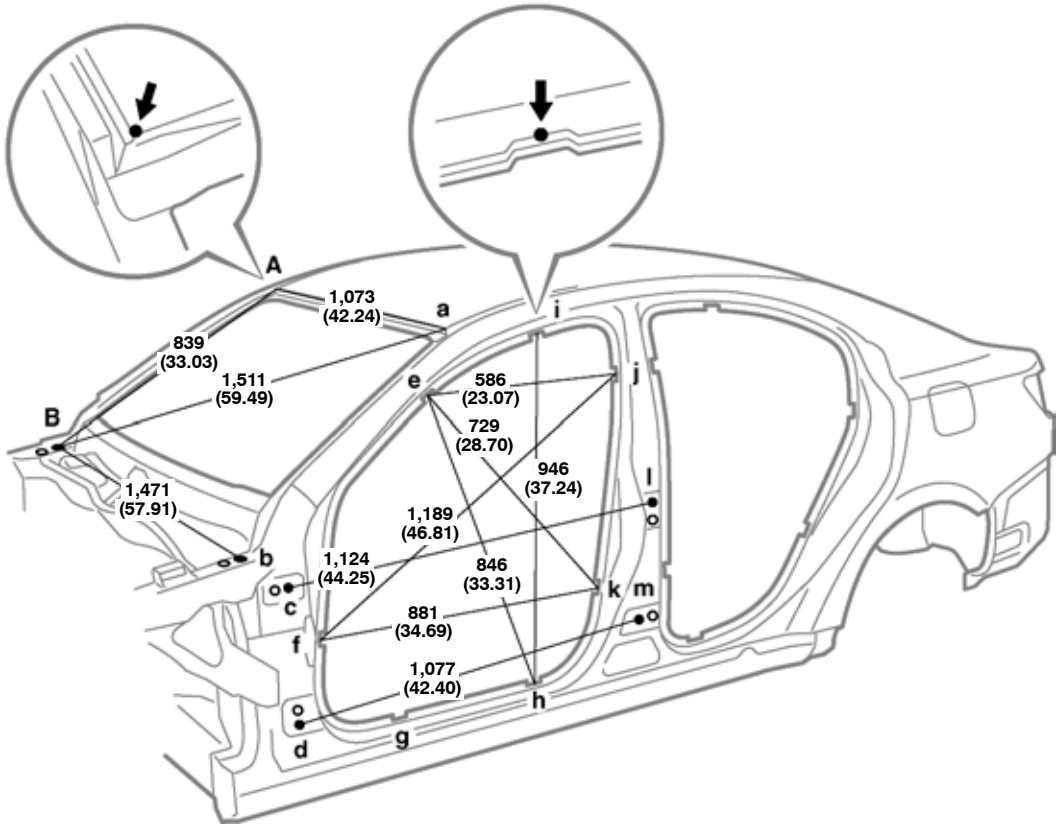

Vehicle Dimensions

E-e	F-f	G-g	H-h	I-i	J-j	K-k
1,211 (47.68)	1,467 (57.76)	1,492 (58.74)	1,492 (58.74)	1,116 (43.94)	1,285 (50.59)	1,461 (57.52)

E-f or e-F	E-h or e-H	E-i or e-I	E-k or e-K	F-j or f-J	F-k or f-K	G-h or g-H	H-i or h-I
1,544 (60.79)	1,588 (62.52)	1,230 (48.43)	1,517 (59.72)	1,816 (71.50)	1,709 (67.28)	1,550 (61.02)	1,600 (62.99)

HINT: For symbols, capital letters indicate right side of vehicle, small letters indicate left side of vehicle (seen from rear).

mm (in.)

Symbol	Name	Hole dia.	Symbol	Name	Hole dia.
A, a	Roof panel corner	—	H, h	Rocker panel assembly mark	—
B, b	Hood hinge installation nut-rear	M8 (0.31)	I, i	Roof side rail assembly mark	—
C, c	Front door hinge installation nut	M8 (0.31)	J, j	Center body pillar assembly mark	—
D, d	Front door hinge installation nut	M8 (0.31)	K, k	Center body pillar assembly mark	—
E, e	Front body pillar assembly mark	—	L, l	Rear door hinge installation nut	M8 (0.31)
F, f	Front body pillar assembly mark	—	M, m	Rear door hinge installation nut	M8 (0.31)
G, g	Rocker panel assembly mark	—	—	—	—

BODY OPENING AREAS (Side View-Rear)

(Three-Dimensional Distance)

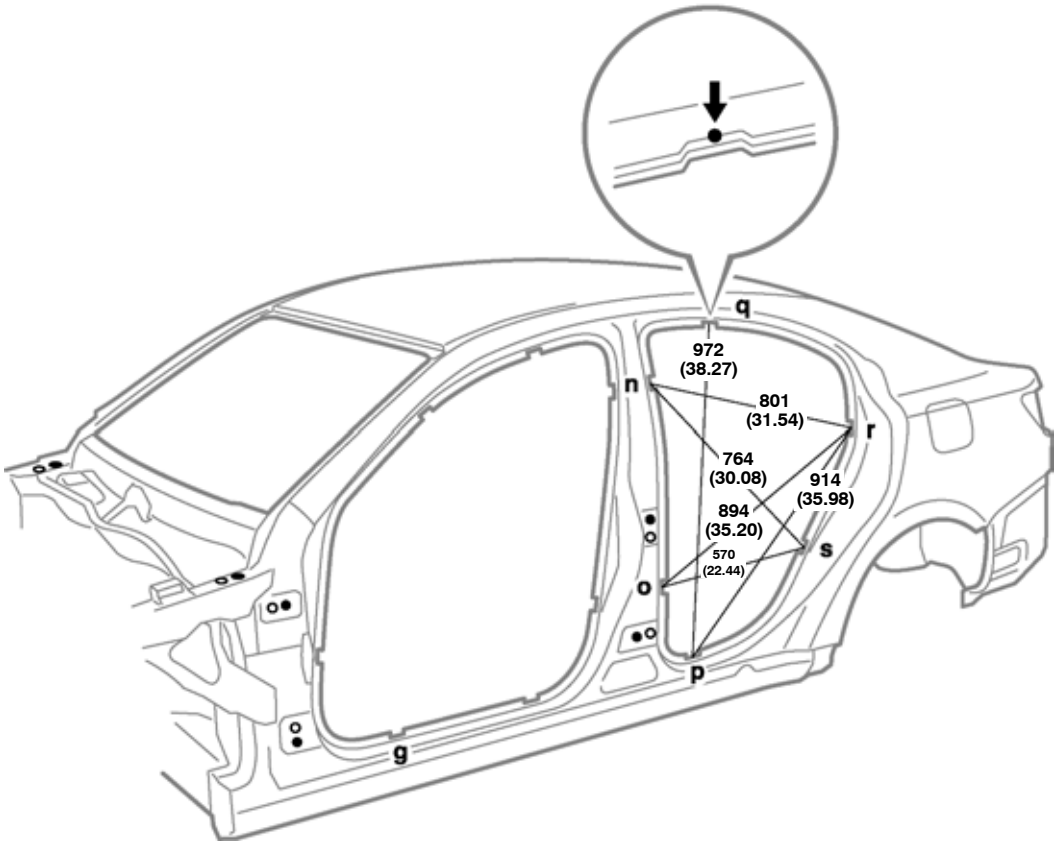

Vehicle Dimensions

N-n	O-o	P-p	Q-q	R-r	S-s
1,285 (50.59)	1,461 (57.52)	1,492 (58.74)	1,103 (43.43)	1,370 (53.94)	1,490 (58.66)

G-p or g-P	N-p or n-P	N-r or n-R	N-s or n-S	O-r or o-R	O-s or o-S	P-q or p-Q	R-s or r-S
1,770 (69.69)	1,597 (62.87)	1,550 (61.02)	1,580 (62.20)	1,674 (65.91)	1,582 (62.28)	1,609 (63.35)	1,494 (58.82)

HINT: For symbols, capital letters indicate right side of vehicle, small letters indicate left side of vehicle (seen from rear).

mm (in.)

Symbol	Name	Hole dia.	Symbol	Name	Hole dia.
G, g	Rocker panel assembly mark	—	Q, q	Roof side rail assembly mark	—
N, n	Center body pillar assembly mark	—	R, r	Quarter panel assembly mark	—
O, o	Center body pillar assembly mark	—	S, s	Quarter panel assembly mark	—
P, p	Rocker panel assembly mark	—	—	—	—

BODY OPENING AREAS (Rear View)

(Three-Dimensional Distance)

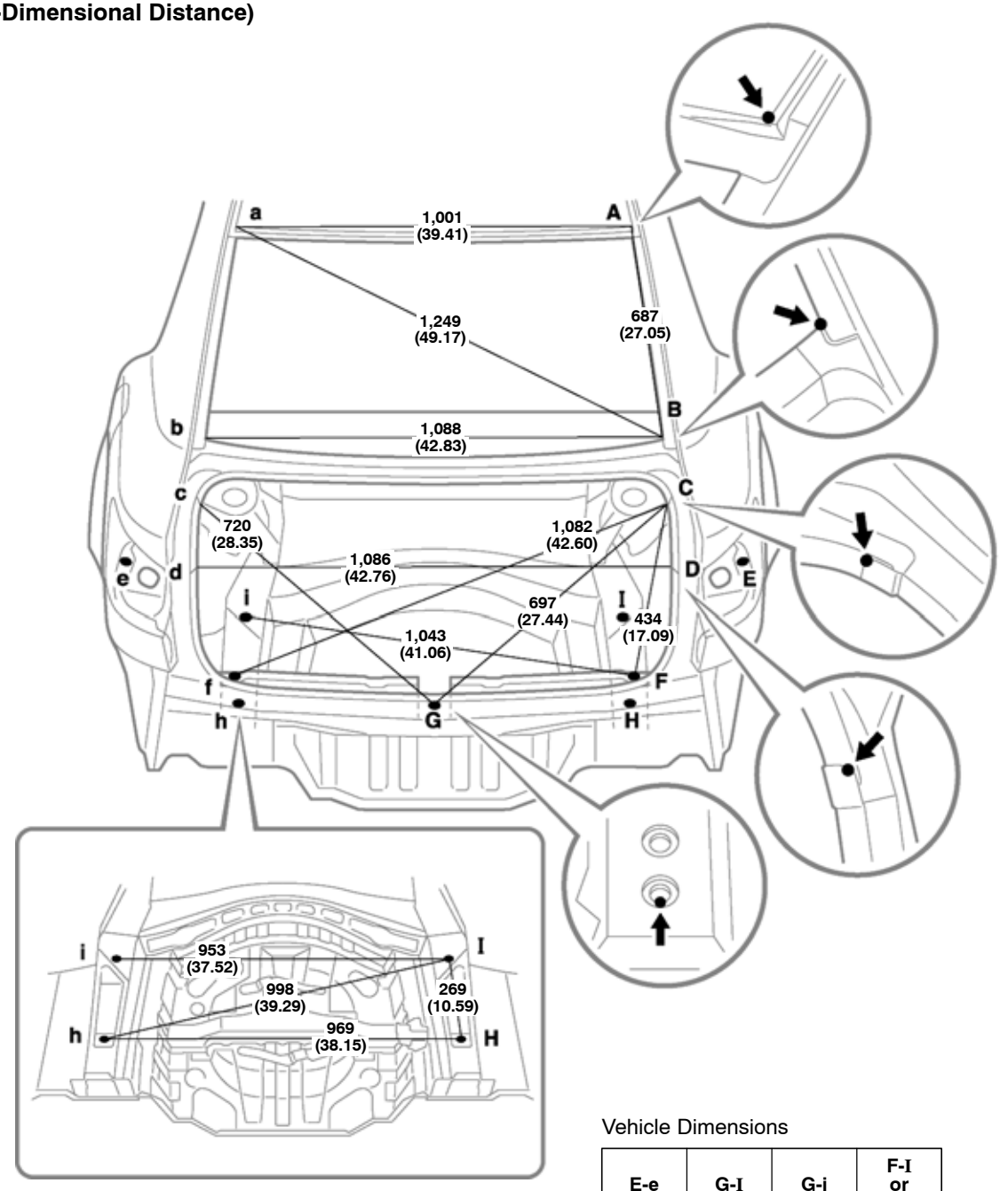

Vehicle Dimensions

E-e	G-I	G-i	F-I or f-i
1,406 (55.35)	668 (26.30)	689 (27.13)	442 (17.40)

HINT: For symbols, capital letters indicate right side of vehicle, small letters indicate left side of vehicle (seen from rear).

mm (in.)

Symbol	Name	Hole dia.	Symbol	Name	Hole dia.
A, a	Roof panel corner	—	E, e	Quarter panel standard hole	ø 13 (0.51)
B, b	Quarter panel /Luggage compartment opening trough adjoining portion	—	F, f	Luggage compartment trim cover installation hole	ø 8.5 (0.335)
			G	Luggage door lock striker installation nut	M6 (0.24)
C, c	Luggage compartment opening trough/ Upper back reinforcement adjoining portion	—	H, h	Rear side member reinforcement standard hole	ø 18 (0.71)
			I, i	Rear side member reinforcement standard hole	ø 18 (0.71)
D, d	Quarter panel rear lower extension/Luggage compartment opening trough adjoining portion	—	—	—	—

UNDER BODY
2WD

(Three-Dimensional Distance)

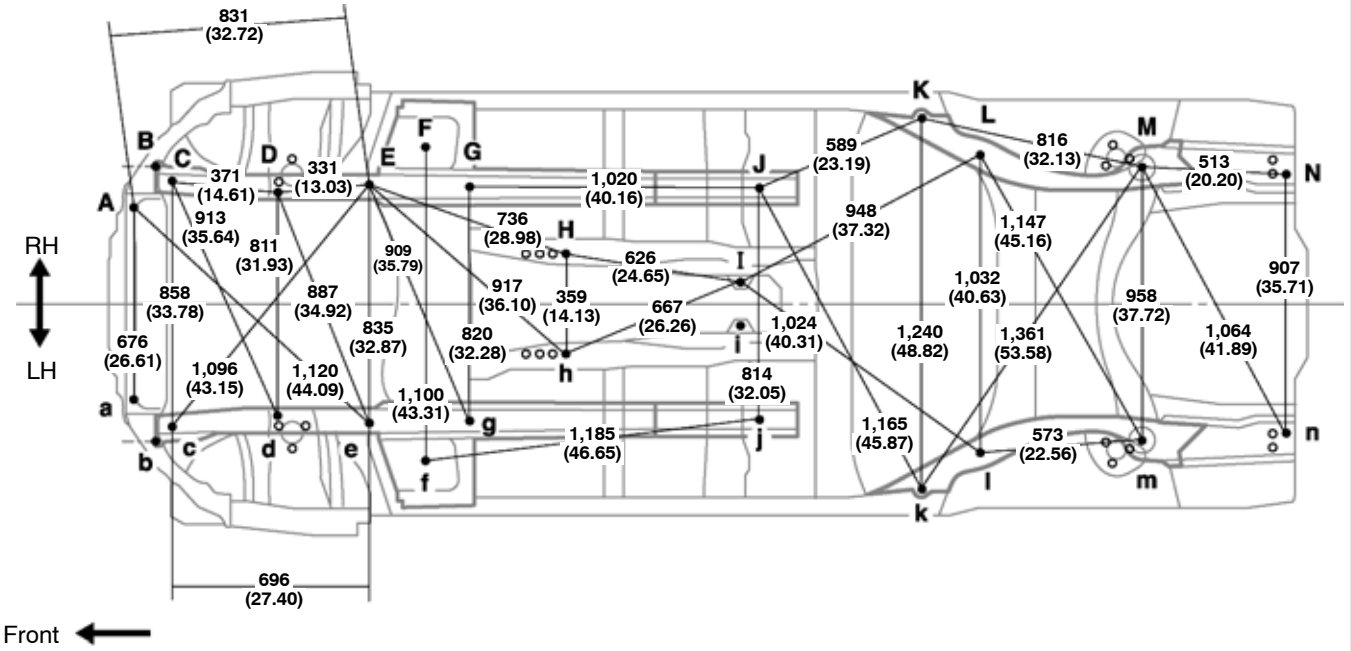

Vehicle Dimensions

B-b	C-F or c-f	C-f or c-F	E-G or e-g	F-j or f-J	G-j or g-J
970 (38.19)	915 (36.02)	1,335 (52.56)	376 (14.80)	1,516 (59.69)	1,306 (51.42)

Height From Imaginary Standard Line

1	2	3
100 (3.94)	100 (3.94)	100 (3.94)

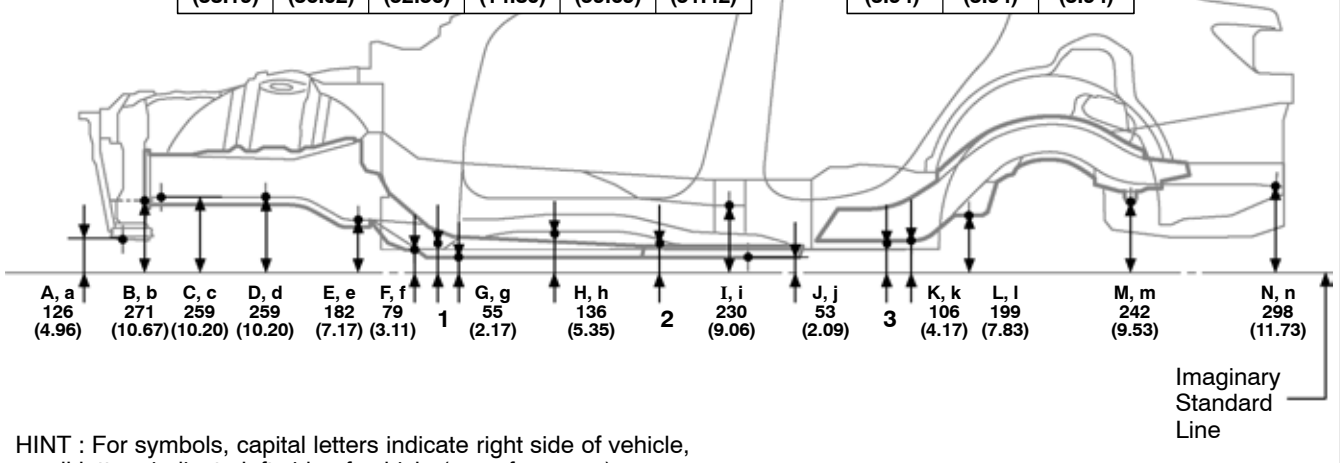

HINT : For symbols, capital letters indicate right side of vehicle, small letters indicate left side of vehicle (seen from rear).

mm (in.)

Symbol	Name	Hole dia.	Symbol	Name	Hole dia.
A, a	Front crossmember standard hole	ø 10 (0.39)	I, i	Propeller shaft center support bearing installation nut	M10 (0.39)
B, b	Crush box installation nut	M10 (0.39)			
C, c	Front side member standard hole	ø 18 (0.71)	J, j	Front floor under reinforcement standard hole	ø 15 (0.59)
D, d	Front suspension crossmember installation nut-front	M14 (0.55)	K, k	Rear floor side member standard hole	ø 18 (0.71)
E, e	Front suspension crossmember installation nut-rear	M16 (0.63)	L, l	Rear suspension member installation nut-front	M14 (0.55)
F, f	Torque box front standard hole	ø 25 (0.98)	M, m	Rear suspension member installation nut-rear	M14 (0.55)
G, g	Front side member standard hole	ø 25 (0.98)	N, n	Muffler support bracket installation nut	M12 (0.47)
H, h	Engine rear mounting member installation nut	M10 (0.39)	—	—	—

UNDER BODY
4WD

(Three-Dimensional Distance)

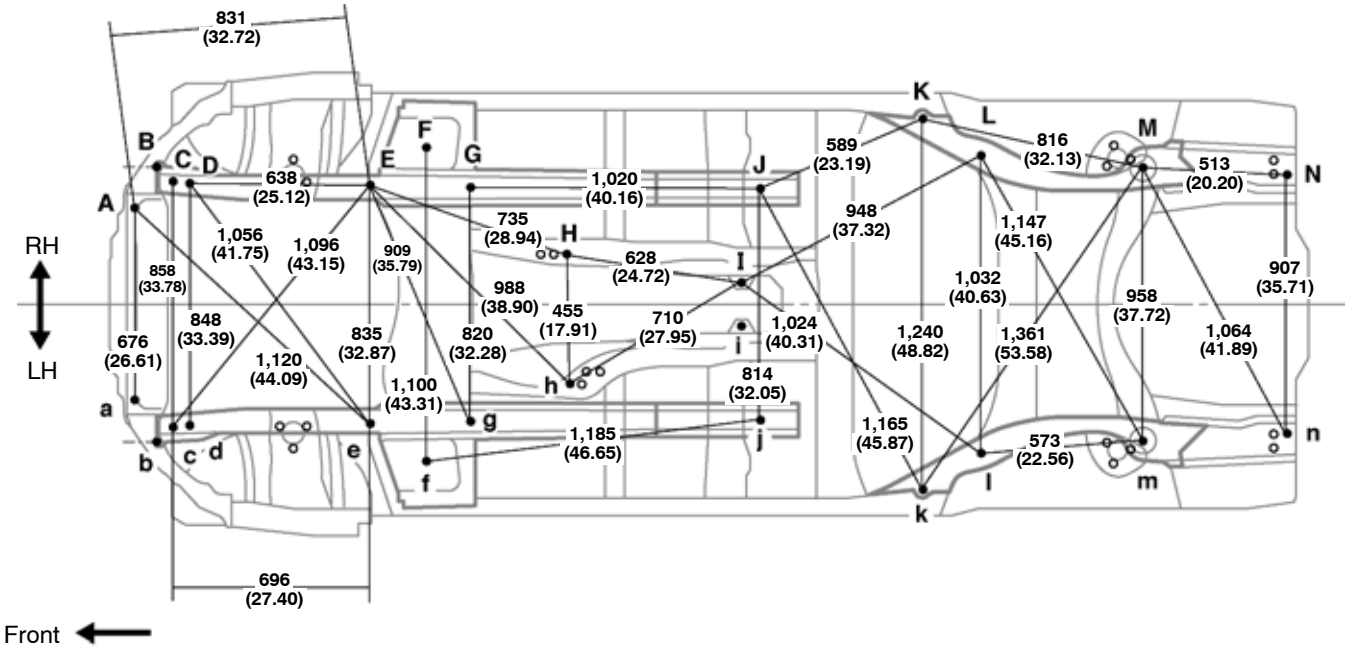

Vehicle Dimensions

B-b	C-F or c-f	C-f or c-F	E-G or e-g	e-H	e-h	H-i	h-i	F-j or f-J	G-j or g-J
970 (38.19)	915 (36.02)	1,335 (52.56)	376 (14.80)	912 (35.91)	713 (28.07)	667 (26.26)	650 (25.59)	1,516 (59.69)	1,306 (51.42)

Height From Imaginary Standard Line

1	2	3
100 (3.94)	100 (3.94)	100 (3.94)

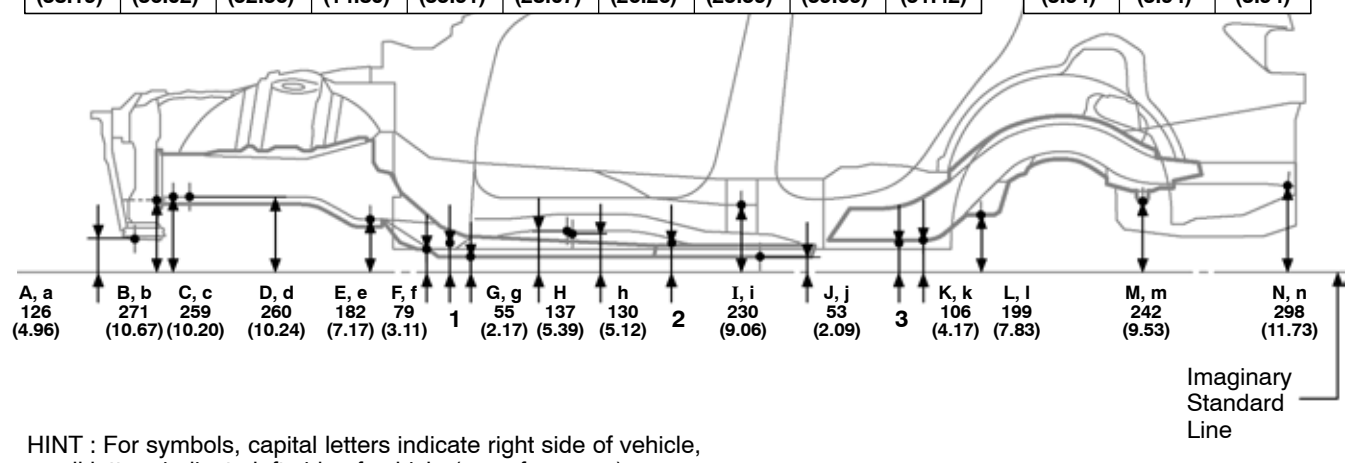

HINT : For symbols, capital letters indicate right side of vehicle, small letters indicate left side of vehicle (seen from rear).

mm (in.)

Symbol	Name	Hole dia.	Symbol	Name	Hole dia.
A, a	Front crossmember stadard hole	ø 10 (0.39)	I, i	Propeller shaft center support bearing installation nut	M10 (0.39)
B, b	Crush box installation nut	M10 (0.39)			
C, c	Front side member standard hole	ø 18 (0.71)	J, j	Front floor under reinforcement standard hole	ø 15 (0.59)
D, d	Front suspension crossmember installation nut-front	M14 (0.55)	K, k	Rear floor side member standard hole	ø 18 (0.71)
E, e	Front suspension crossmember installation nut-rear	M16 (0.63)	L, l	Rear suspension member installation nut-front	M14 (0.55)
F, f	Torque box front standard hole	ø 25 (0.98)	M, m	Rear suspension member installation nut-rear	M14 (0.55)
G, g	Front side member standard hole	ø 25 (0.98)	N, n	Muffler support bracket installation nut	M12 (0.47)
H, h	Engine rear mounting member installation nut	M10 (0.39)	—	—	—

UNDER BODY
2WD

(Two-Dimensional Distance)

Suspension Member Installation Area	Upper Arm Installation Area
Tolerance: within ± 2mm (0.079 in.)	Tolerance: within ± 1.5mm (0.059 in.)

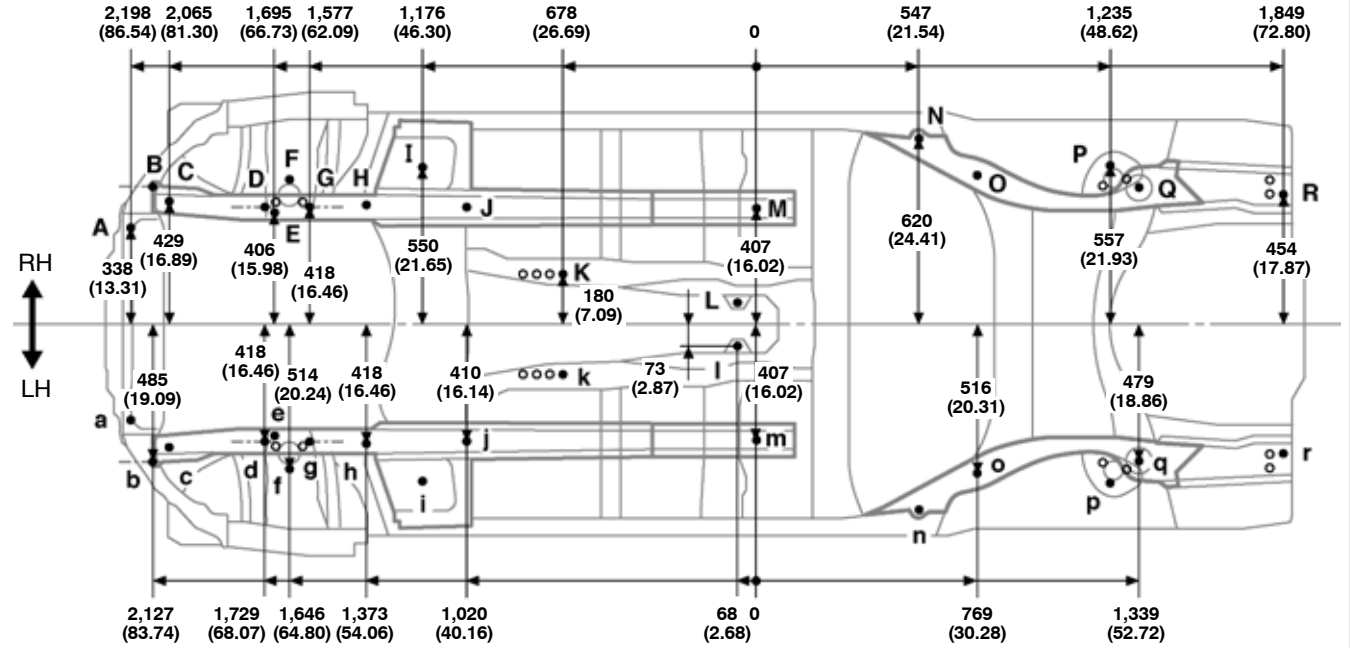

Front

Wheel base	2,730 (107.48)

1	2	3
100 (3.94)	100 (3.94)	100 (3.94)

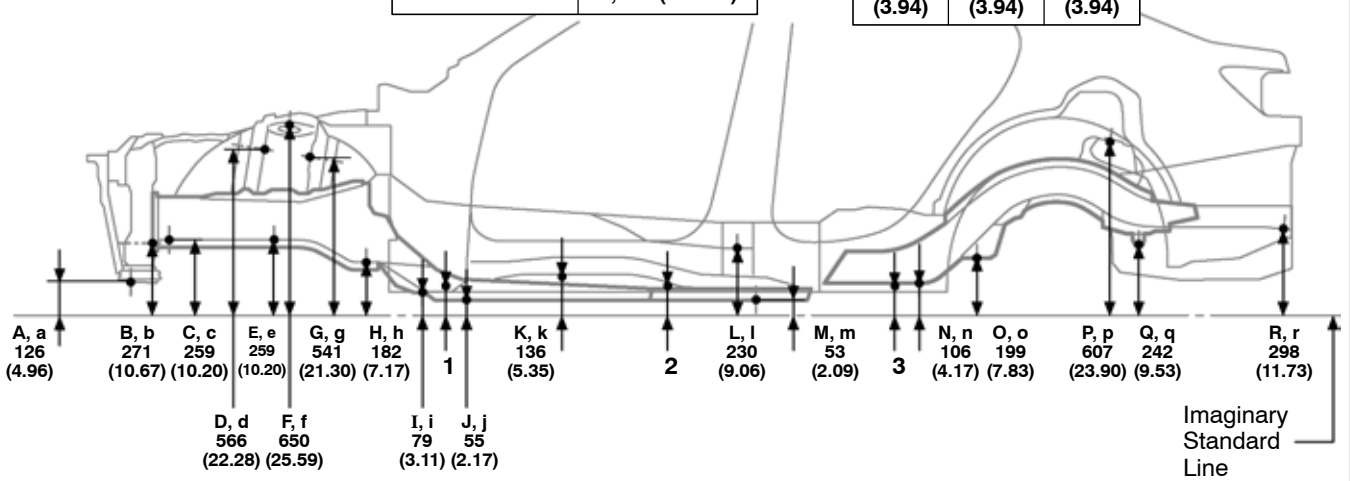

HINT: For symbols, capital letters indicate right side of vehicle, small letters indicate left side of vehicle (seen from rear).

mm (in.)

Symbol	Name	Hole dia.	Symbol	Name	Hole dia.
A, a	Front crossmember standard hole	ø 10 (0.39)	J, j	Front side member standard hole	ø 25 (0.98)
B, b	Crush box installation nut	M10 (0.39)	K, k	Engine rear mounting member installation nut	M10 (0.39)
C, c	Front side member standard hole	ø 18 (0.71)	L, l	Propeller shaft center support bearing installation nut	M10 (0.39)
D, d	Front suspension upper arm installation hole front-rear	ø 10.3 (0.406)	M, m	Front floor under reinforcement standard hole	ø 15 (0.59)
E, e	Front suspension crossmember installation nut-front	M14 (0.55)	N, n	Rear floor side member standard hole	ø 18 (0.71)
F, f	Front spring support hole-outer	ø 13 (0.51)	O, o	Rear suspension member installation nut-front	M14 (0.55)
G, g	Front suspension upper arm installation hole rear-front	ø 10.3 (0.406)	P, p	Rear spring support hole-outer	ø 11 (0.43)
H, h	Front suspension crossmember installation nut-rear	M16 (0.63)	Q, q	Rear suspension member installation nut-rear	M14 (0.55)
I, i	Torque box front standard hole	ø 25 (0.98)	R, r	Muffler support bracket installation nut	M12 (0.47)

UNDER BODY
4WD

(Two-Dimensional Distance)

Suspension Member Installation Area	Upper Arm Installation Area
Tolerance: within ± 2mm (0.079 in.)	Tolerance: within ± 1.5mm (0.059 in.)

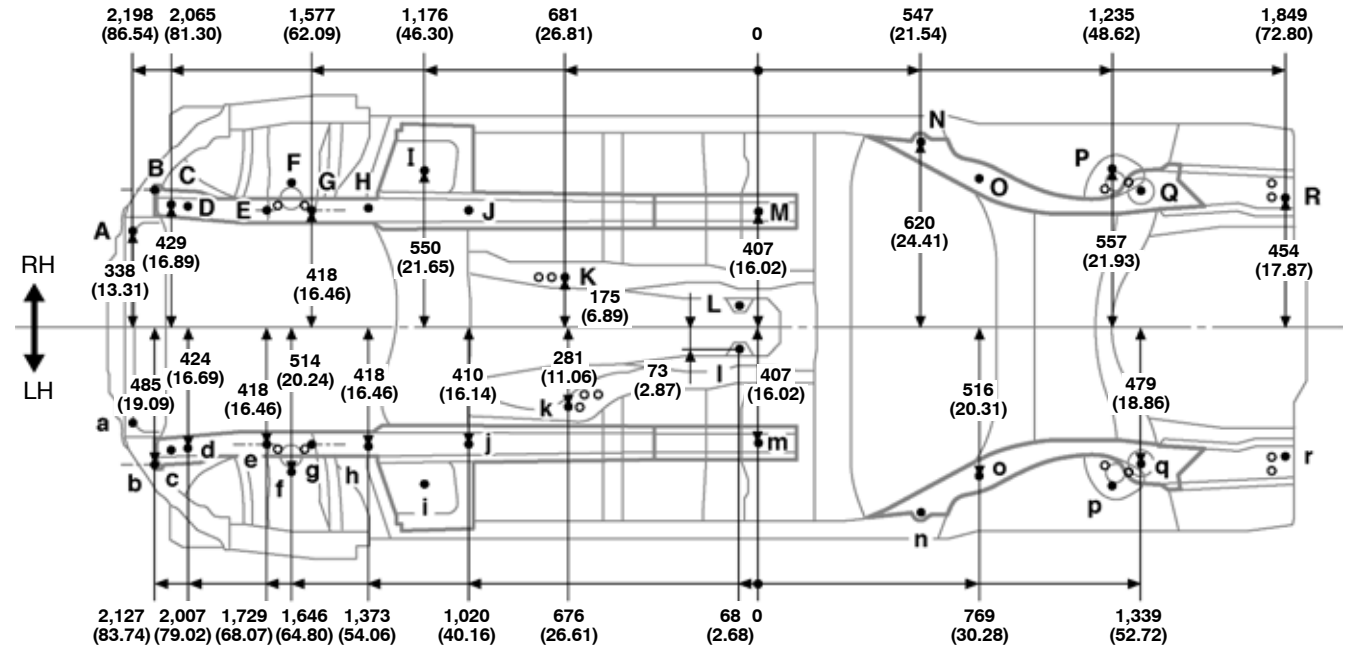

Front

Wheel base	2,730 (107.48)

1	2	3
100 (3.94)	100 (3.94)	100 (3.94)

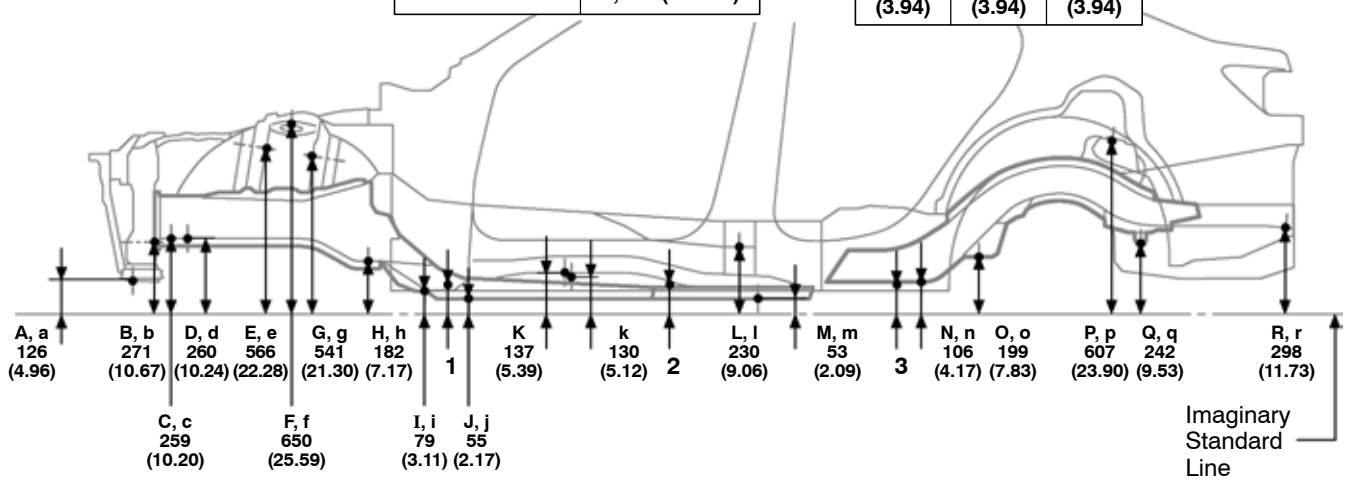

HINT: For symbols, capital letters indicate right side of vehicle, small letters indicate left side of vehicle (seen from rear).

mm (in.)

Symbol	Name	Hole dia.	Symbol	Name	Hole dia.
A, a	Front crossmember standard hole	ø 10 (0.39)	J, j	Front side member standard hole	ø 25 (0.98)
B, b	Crush box installation nut	M 10 (0.39)	K, k	Engine rear mounting member installation nut	M10 (0.39)
C, c	Front side member standard hole	ø 18 (0.71)	L, l	Propeller shaft center support bearing installation nut	M10 (0.39)
D, d	Front suspension crossmember installation nut-front	M14 (0.55)	M, m	Front floor under reinforcement standard hole	ø 15 (0.59)
E, e	Front suspension upper arm installation hole front-rear	ø 10.3 (0.406)	N, n	Rear floor side member standard hole	ø 18 (0.71)
F, f	Front spring support hole-outer	ø 13 (0.51)	O, o	Rear suspension member installation nut-front	M14 (0.55)
G, g	Front suspension upper arm installation hole rear-front	ø 10.3 (0.406)	P, p	Rear spring support hole-outer	ø 11 (0.43)
H, h	Front suspension crossmember installation nut-rear	M16 (0.63)	Q, q	Rear suspension member installation nut-rear	M14 (0.55)
I, i	Torque box front standard hole	ø 25 (0.98)	R, r	Muffler support bracket installation nut	M12 (0.47)

FRONT SUSPENSION CROSSMEMBER
2WD

(Three-Dimensional Distance)

B-b	C-c	E-e
696 (27.40)	811 (31.93)	835 (32.87)

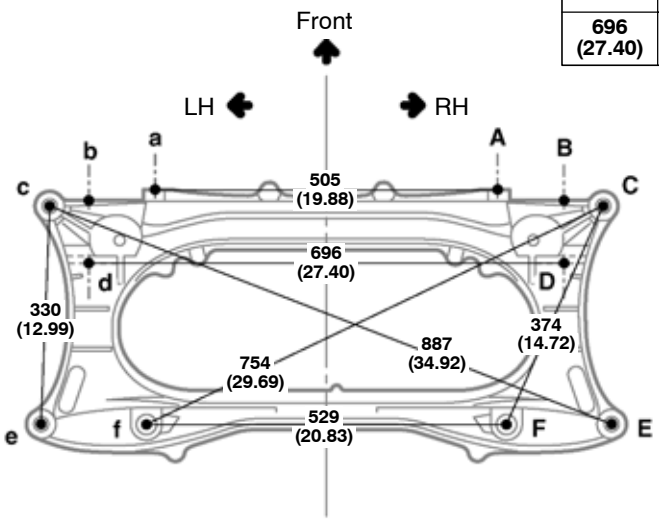

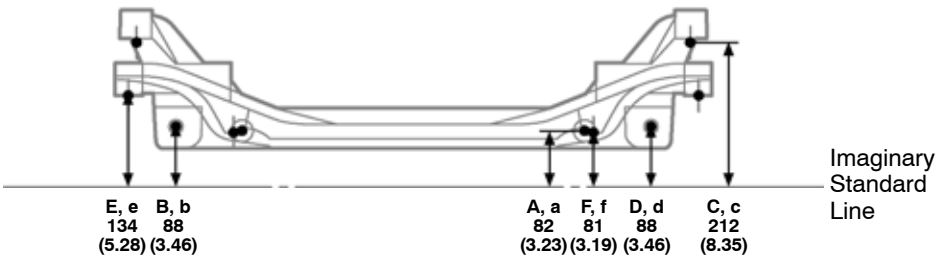

HINT: For symbols, capital letters indicate right side of vehicle, small letters indicate left side of vehicle (Seen from rear).

mm (in.)

Symbol	Name	Hole dia.	Symbol	Name	Hole dia.
A, a	Power steering gear box installation hole	ø 14.5 (0.571)	D, d	Lower arm installation hole	ø 14.5 (0.571)
B, b	Lower arm installation hole	ø 14.5 (0.571)	E, e	Front suspension crossmember installation hole-lower	ø 27 (1.06)
C, c	Front suspension crossmember installation hole-lower	RH: 22.1 × 22.5 (0.870 × 0.886) LH: 26.6 × 22.5 (1.047 × 0.886)	F, f	Lower arm installation hole	ø 12.3 (0.484)

FRONT SUSPENSION CROSSMEMBER
2WD

(Two-Dimensional Distance)

Suspension Member Installation Area	Lower Arm Installation Area
Tolerance: within ± 2 mm (0.079 in.)	Tolerance: within ± 1.5 mm (0.059 in.)

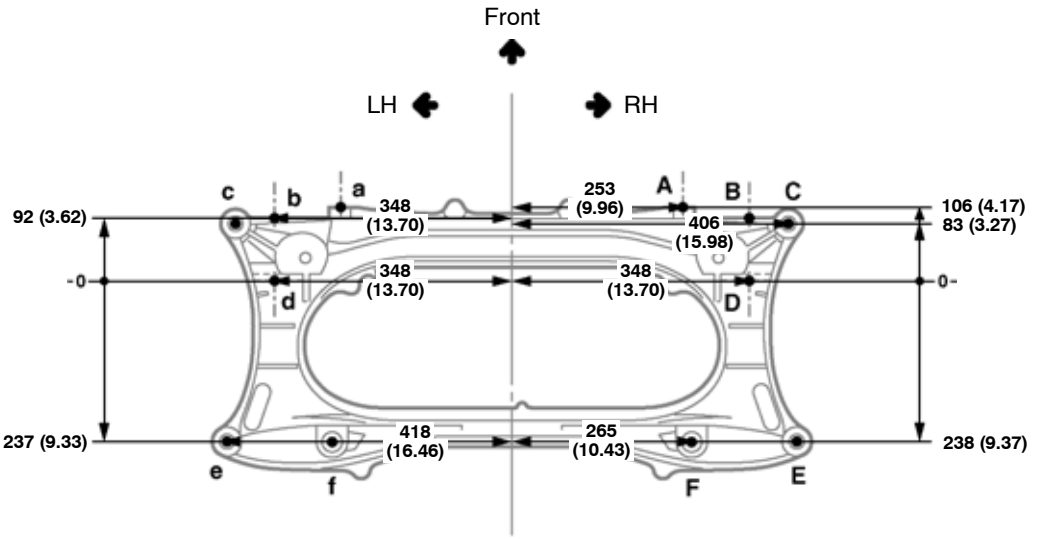

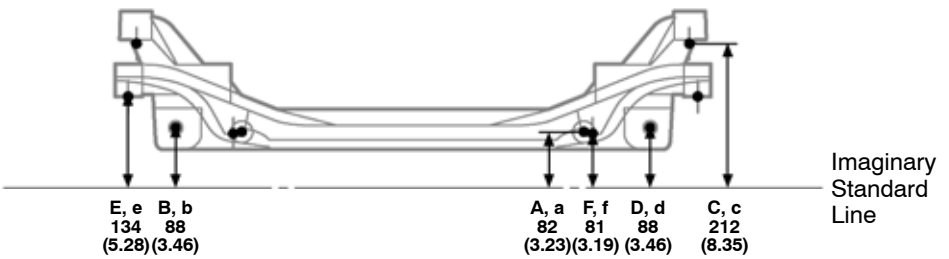

HINT: For symbols, capital letters indicate right side of vehicle, small letters indicate left side of vehicle (Seen from rear).

mm (in.)

Symbol	Name	Hole dia.	Symbol	Name	Hole dia.
A, a	Power steering gear box installation hole	ø 14.5 (0.571)	D, d	Lower arm installation hole	ø 14.5 (0.571)
B, b	Lower arm installation hole	ø 14.5 (0.571)	E, e	Front suspension crossmember installation hole-lower	ø 27 (1.06)
C, c	Front suspension crossmember installation hole-lower	RH: 22.1 × 22.5 (0.870 × 0.886) LH: 26.6 × 22.5 (1.047 × 0.886)	F, f	Lower arm installation hole	ø 12.3 (0.484)

FRONT SUSPENSION CROSSMEMBER
4WD

(Three-Dimensional Distance)

G-g	H-h
531 (20.91)	835 (32.87)

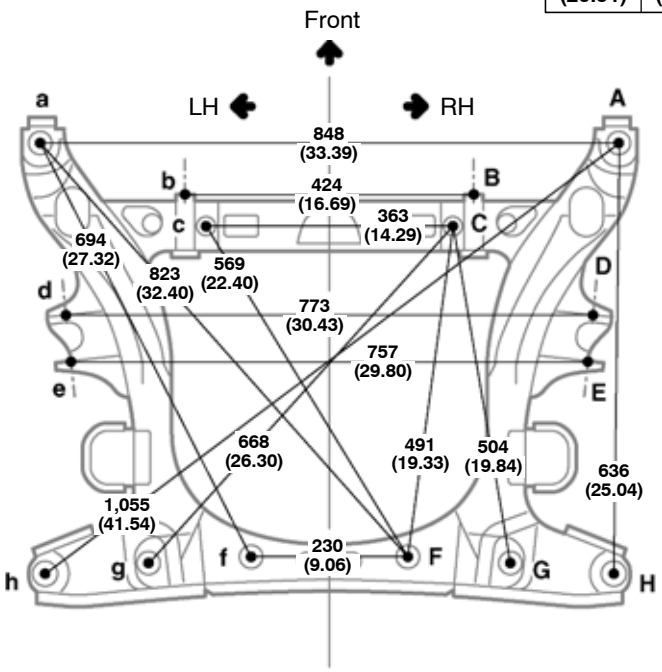

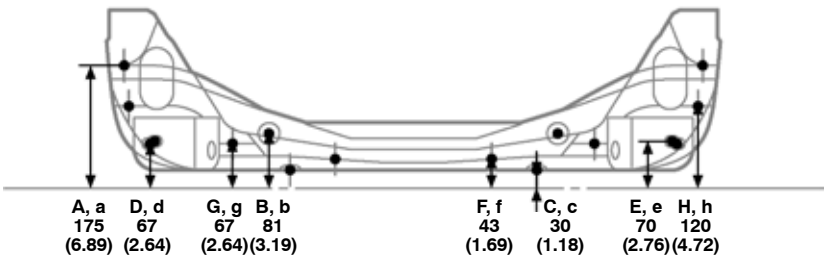

HINT: For symbols, capital letters indicate right side of vehicle, small letters indicate left side of vehicle (Seen from rear).

mm (in.)

Symbol	Name	Hole dia.	Symbol	Name	Hole dia.
A, a	Front frame installation hole	RH: ø 15.5 (0.610) LH: ø 22.0 (0.87)	E, e	Lower arm installation hole	ø 23 × 14.5 (0.91 × 0.571)
B, b	Power steering gear box installation hole	ø 14.5 (0.571)	F, f	Front frame standard hole	ø 10 (0.39)
C, c	Front frame standard hole	ø 13 (0.51)	G, g	Lower arm installation hole	ø 15 (0.59)
D, d	Lower arm installation hole	ø 23 × 14.5 (0.91 × 0.571)	H, h	Lower arm installation hole	ø 24 (0.94)

FRONT SUSPENSION CROSSMEMBER
4WD

(Two-Dimensional Distance)

Suspension Member Installation Area	Each Linkage Arm Installation Area
Tolerance: within ± 2 mm (0.079 in.)	Tolerance: within ± 1.5 mm (0.059 in.)

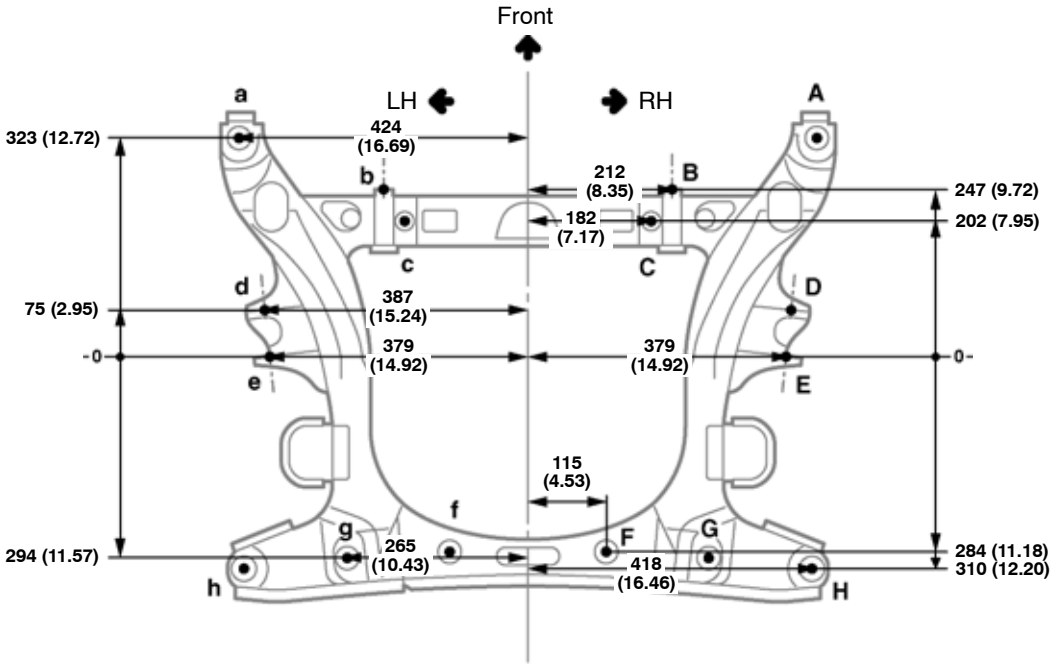

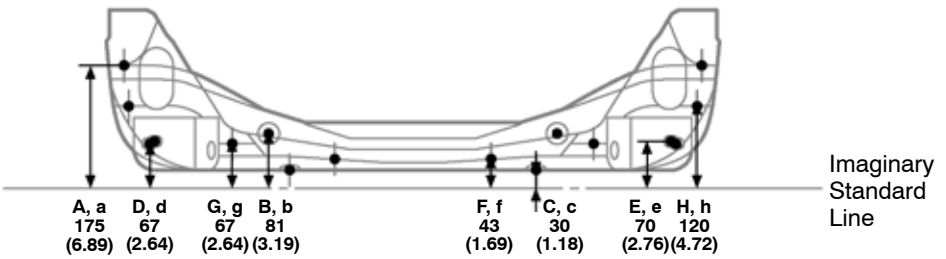

HINT: For symbols, capital letters indicate right side of vehicle, small letters indicate left side of vehicle (Seen from rear).

mm (in.)

Symbol	Name	Hole dia.	Symbol	Name	Hole dia.
A, a	Front frame installation hole	RH: ø 15.5 (0.610) LH: ø 22.0 (0.87)	E, e	Lower arm installation hole	ø 23 × 14.5 (0.91 × 0.571)
B, b	Power steering gear box installation hole	ø 14.5 (0.571)	F, f	Front frame standard hole	ø 10 (0.39)
C, c	Front frame standard hole	ø 13 (0.51)	G, g	Lower arm installation hole	ø 15 (0.59)
D, d	Lower arm installation hole	ø 23 × 14.5 (0.91 × 0.571)	H, h	Lower arm installation hole	ø 24 (0.94)

REAR SUSPENSION CROSSMEMBER

(Three-Dimensional Distance)

B-g or b-G	D-d
832 (32.76)	936 (36.85)

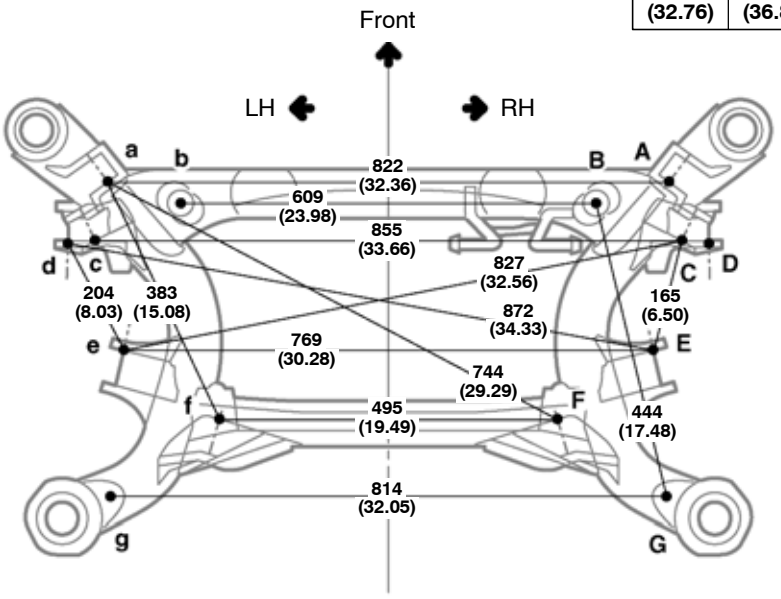

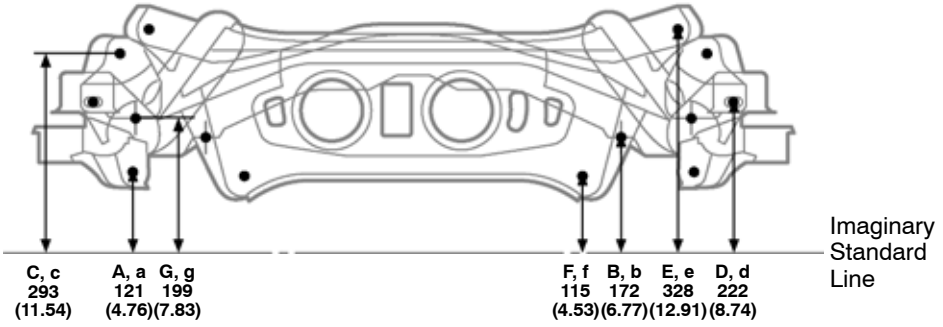

HINT: For symbols, capital letters indicate right side of vehicle, small letters indicate left side of vehicle (Seen from rear).

mm (in.)

Symbol	Name	Hole dia.	Symbol	Name	Hole dia.
A, a	Rear suspension arm installation hole front-rear	ø 12.2 (0.480)	E, e	Upper control arm installation hole rear-front	ø 14.2 (0.559)
B, b	Rear suspension member standard hole	ø 15 (0.59)	F, f	Rear suspension arm installation hole rear-front	ø 14.2 (0.559)
C, c	Upper control arm installation hole front-rear	ø 14.2 (0.559)	G, g	Rear suspension member standard hole	ø 15 (0.59)
D, d	Toe control arm installation hole-rear	ø 26 × 12.2 (1.02 × 0.480)	—	—	—

REAR SUSPENSION CROSSMEMBER

(Two-Dimensional Distance)

Suspension Member Installation Area	Each Linkage Arm Installation Area
Tolerance: within ± 2 mm (0.079 in.)	Tolerance: within ± 1.5 mm (0.059 in.)

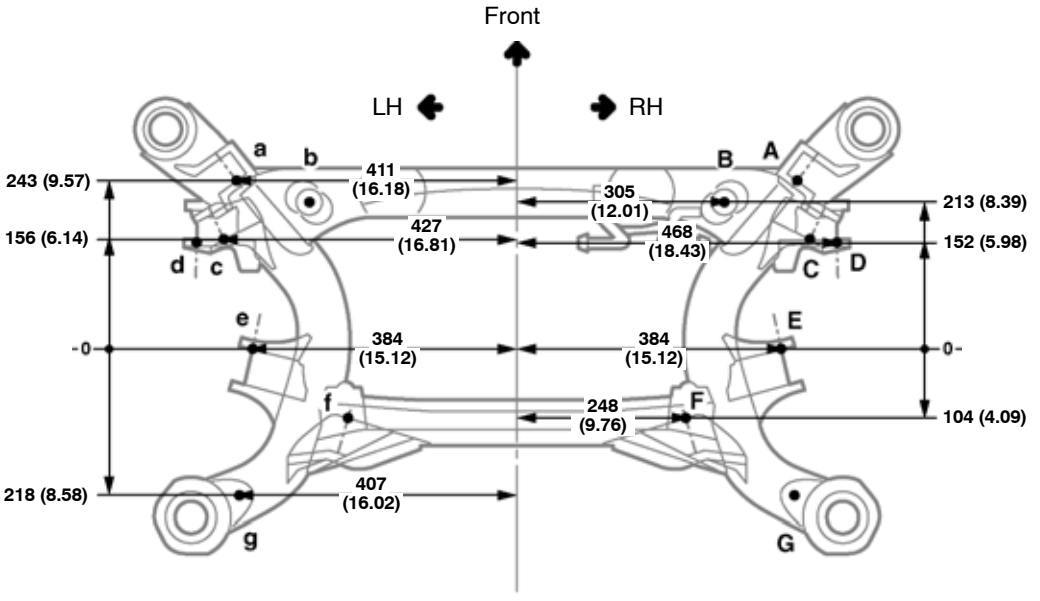

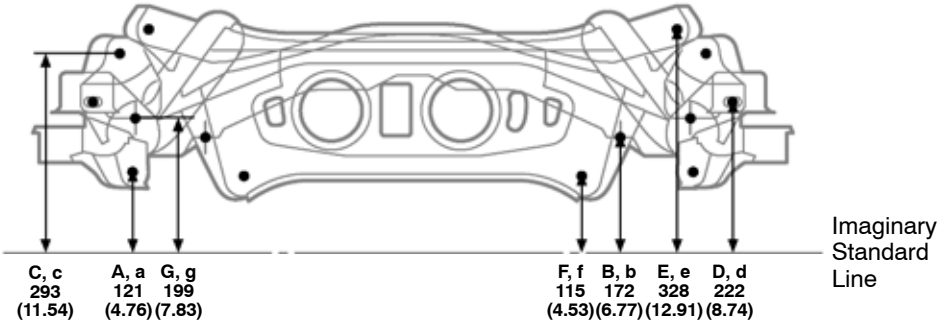

HINT: For symbols, capital letters indicate right side of vehicle, small letters indicate left side of vehicle (Seen from rear).

mm (in.)

Symbol	Name	Hole dia.	Symbol	Name	Hole dia.
A, a	Rear suspension arm installation hole front-rear	ø 12.2 (0.480)	E, e	Upper control arm installation hole rear-front	ø 14.2 (0.559)
B, b	Rear suspension member standard hole	ø 15 (0.59)	F, f	Rear suspension arm installation hole rear-front	ø 14.2 (0.559)
C, c	Upper control arm installation hole front-rear	ø 14.2 (0.559)	G, g	Rear suspension member standard hole	ø 15 (0.59)
D, d	Toe control arm installation hole-rear	ø 26 × 12.2 (1.02 × 0.480)	—	—	—