Table of Contents

N73B60 Engine - Workbook

Subject **Page**

N73B60 Engine

Objectives of the Module....2
Purpose of the System....3
Technical Data....4

Disassembly - Components

Intake Manifold....6
Cylinder Head Cover....8
Ancillary Components and Drive Belts....9
Cylinder Heads....10
Valvetronic....11
Fuel Injectors....14
Lubrication Components....15
Crankshaft and Bearings....17
Pistons and Connecting Rods....17
Crankcase....19
Lubrication System....19
Cooling System....21

cardiagn.com

N73B60 Engine

Model: E66 - 760Li

Production: MY 2003

This intent of this workbook is to assist you with key components for disassembly/reassembly in addition to the detailed information found in the Repair Instructions, Technical Data and Tightening Torques from the latest TIS information.

This section will be instructor led for a brief review of the N73 engine. You are encouraged to use this workbook with the latest TIS information to make notes during disassembly/reassembly of the engine. This will be valuable to you as supplementary information or a memory refresher when performing repairs in the future.

Note: For more in depth and detailed information about the N73 engine, refer to the ST047 2003 Systems Diagnosis training manual.

For additional and updated information, always refer to:

www.bmwcenternet.com
- TIS information/updates
- Service Information Bulletins
- DCS messages

Objectives:

After completion of this module you will be able to:

- Disassemble the N73 engine.
- Perform critical measurements and observations to determine engine condition.
- Correctly reassemble (including valve gear timing) the N73 engine.

cardiagn.com

N73B60 Engine

Purpose of the System

The N73 engine is a complete new BMW development from the NG Series (New Generation) as a B60 (6 liter). The N73B60 will be used in the E66 as a 760Li (USA).

The BMW 760Li will set new standards in terms of performance and driving dynamics in the 12-cylinder market segment as well as significantly reduce fuel consumption.

For the first time at BMW, Valvetronic technology (combination of Bi-VANOS and variable intake valve lift) is supplemented by direct injection (DI).

In addition, the N73 cylinder heads use 4 valve technology.

The combination of these cutting edge technologies provides low fuel consumption and maximum power output and torque, making the N73 the best engine in its class.

cardiagn.com

Technical Data

Technical Data Comparison	N73B60	M73B54
V-angle configuration	12 cyl. V / 60°	12 cyl. V / 60°
Displacement (cm 3)	5972	5379
Bore / Stroke (mm)	89 / 80	79 / 85
Cylinder spacing (mm)	98	91
Crankshaft main bearing diam. (mm)	70	75
Conrod big end diam. (mm)	54	48
Power output (kW/HP) at engine speed (rpm)	320 / 438 6000	240 / 326 5000
Torque (Nm) at engine speed (rpm)	600 3950	490 3900
Idle speed (rpm) Maximum engine speed (rpm)	550 6500	600 6500
Compression ratio	11.3 : 1	10 : 1
Valves per cylinder	4	2
Intake valve diam. (mm)	35	42
Exhaust valve diam. (mm)	29	36
Intake valve lift (mm)	0.3 - 9.85	10.3
Exhaust valve lift (mm)	9.7	10.3
Engine weight (kg)	280	-
Fuel requirement	Premium unleaded	Premium unleaded
Knock control	Yes	Yes
Injection pressure (bar)	50 - 120	3.5
Digital Motor Electronics (ECM)	2x MED 9.2.1 & Valvetronic ECU with 2x HDEV ECU	2x ME 5.2 & EML IIIs
Emission compliance level	LEV	LEV
Firing order	1-7-5-11-3-9-6-12-2-8-4-10	1-7-5-11-3-9-6-12-2-8-4-10
Fuel consumption savings compared with M73	12 %	-
Maxmimum regulated vehicle speed (km/h / mph)	250 / 155	250 / 155

cardiagn.com

Power and Torque Output - N73B60 / M73B54

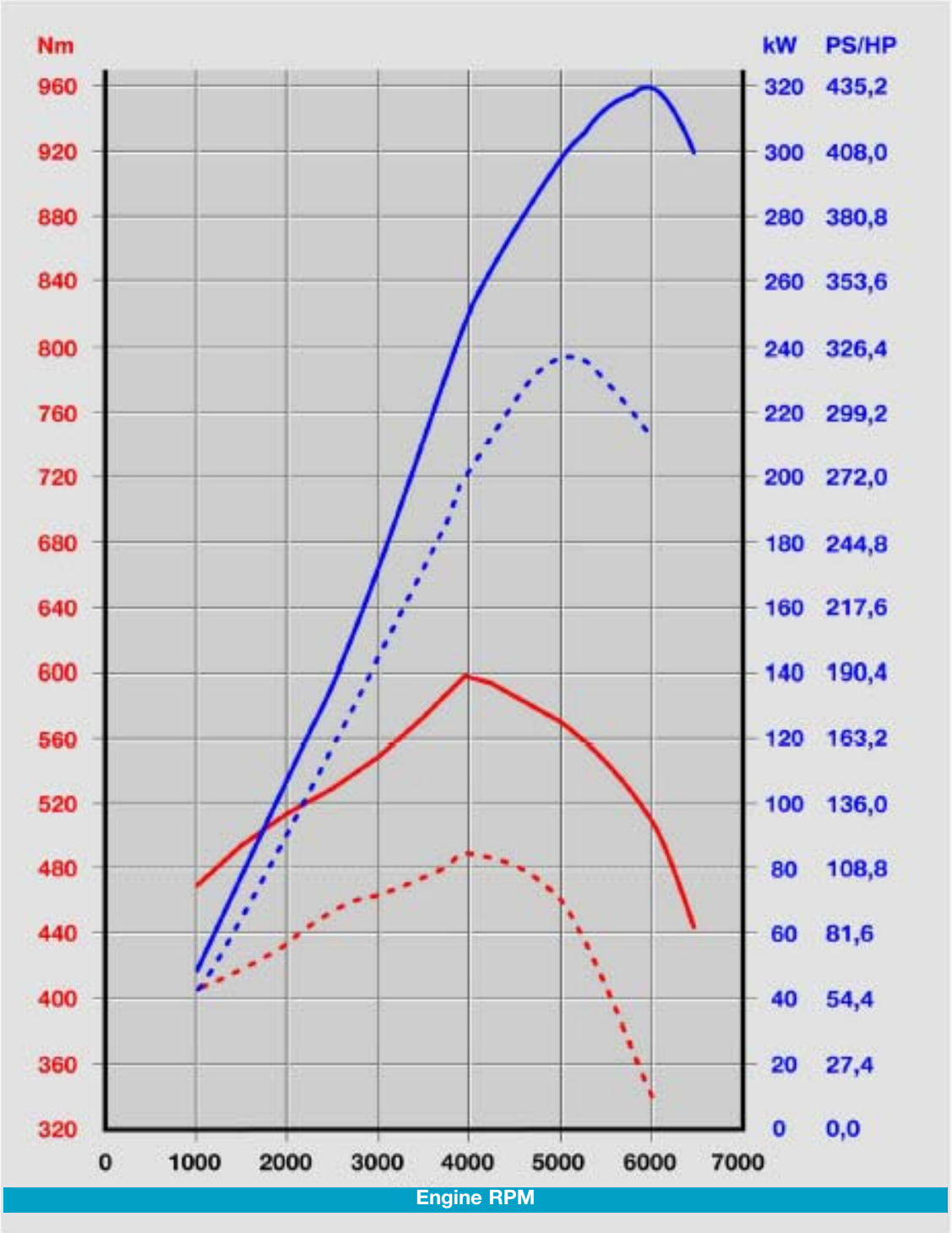

N73B60 ———
M73B54 - - - - -

cardiagn.com

Intake Manifold

The intake system is a complete component constructed of magnesium in a shell type design and has separate manifold chambers for each cylinder bank.

1. Intake manifold pressure sensors
2. Captured gaskets
3. Pressure control valves for crankcase ventilation
4. Throttle valves

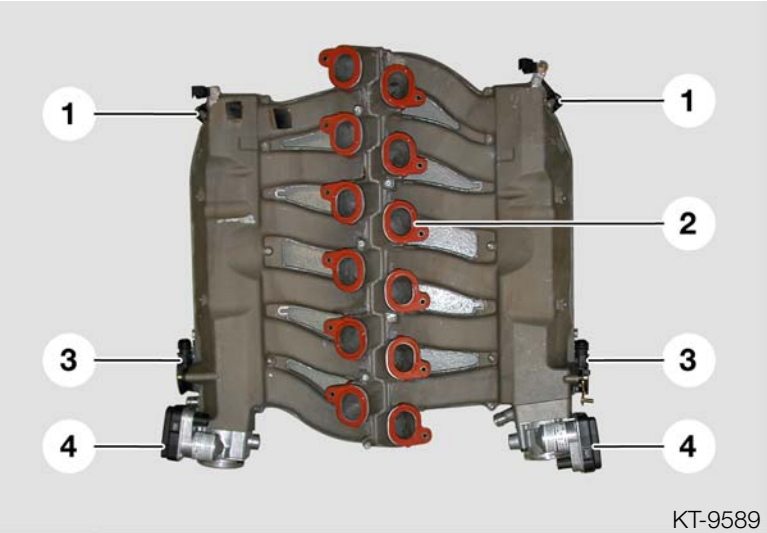

The individual parts of the intake system are bonded and bolted to each other, providing considerable weight reduction (separating the shell halves is not permitted).

The entire intake system is protected against corrosion by a dip coating procedure. The fastening bolts of the add on parts are also coated and must be replaced in the event of damage, to prevent corrosion and pitting.

All of the gaskets (2) are secured by retainers (captured) to provide ease of installation. The intake system is isolated from the engine by rubber elements on the fastening bolts.

An intake manifold pressure sensor (1) is used for each cylinder bank. Recording the manifold differential pressure is necessary for the correct throttle position (synchronization) so that a manifold differential pressure of 50 mbar can be balanced on each bank.

Both sides of the induction system are fitted with a pressure control valve (3) for crankcase ventilation which is distributed to both banks.

Note: When replacing the spark plugs, it is necessary to remove the entire intake system to avoid damaging the spark plugs during installation. The spark plugs must be replaced every 100,000 miles in US vehicles.

cardiagn.com

Intake Manifold - Removal

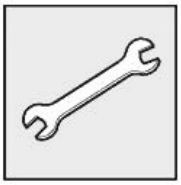

Top Diagram

- Remove plug connections on the throttle assemblies (1).
- Detach engine vent hoses from pressure control valves (2).
- Detach oustide braces for intake manifold (3 L/R).

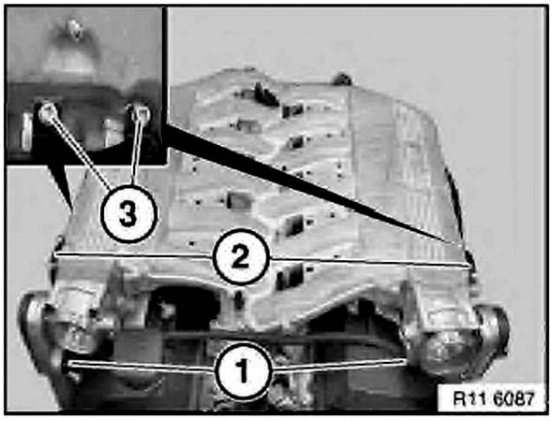

Lower Diagram

- Remove plug connections on the intake manifold pressure sensors (1 L/R).
- Remove bolts (2) along sections (3).
- Lift intake manifold up to remove.

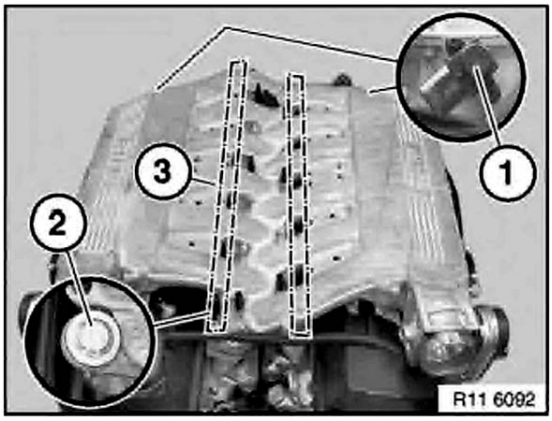

001

Questions

How many attaching bolts are there? _____

What is the tightening torque? _____ *Nm*

How are the intake manifold gaskets held in place? _____

Can the gaskets be reused? _____

Notes: _____

cardiagn.com

Cylinder Head Cover (right) - Removal

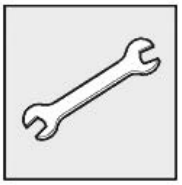

Caution: Do not bend any high pressure lines!

Top Diagram

- Detach high pressure lines (1) at mounting points (2).

On high pressure pump:

- Detach feed line (3).
- Detach high pressure line (4).
- Detach leakage line (5).
- Detach high pressure lines from fuel rail (6).

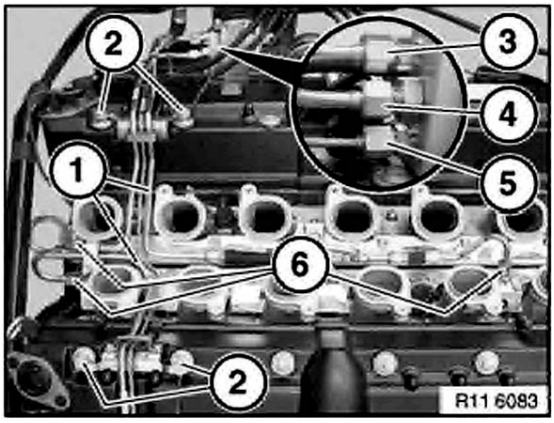

Lower Diagram

- Remove Valvetronic motor.
- Remove mounting bolts (1) and high pressure pump (2).
- Remove bolts (3) and pull out spacer (4).
- Remove Non-Return Valves and cylinder head cover perimeter bolts.

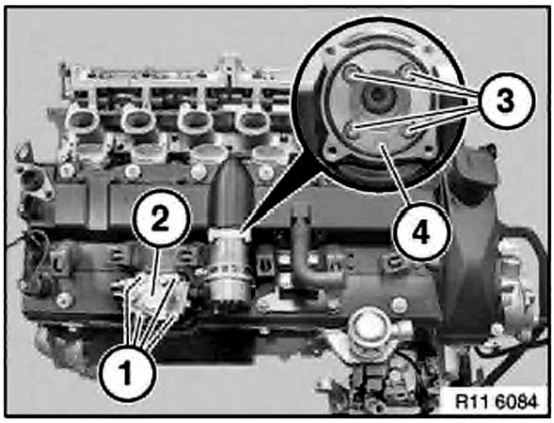

002

Questions

*What is the tightening torque for the coupling nuts on fuel lines 3-6?*_____*Nm*

What should you do to the spark plug domes (sleeves) before reinstalling them?

_____

After removing the high pressure pump (2), what other component must be removed from the pump mounting base? _____

*Why should caution be taken to not bend any of the high pressure fuel lines?*_____

_____

DSC00579

cardiagn.com

Ancillary Components and Drive Belts - Removal

Remove the following components:

1. Water pump pulley
2. 6 rib main drive belt
3. Main drive belt tensioner
4. Alternator
5. Deflection pulley
6. Power steering and dynamic drive pump
7. A/C compressor drive belt tensioner
8. Crankshaft pulley
9. A/C compressor
10. 4 rib A/C compressor drive belt

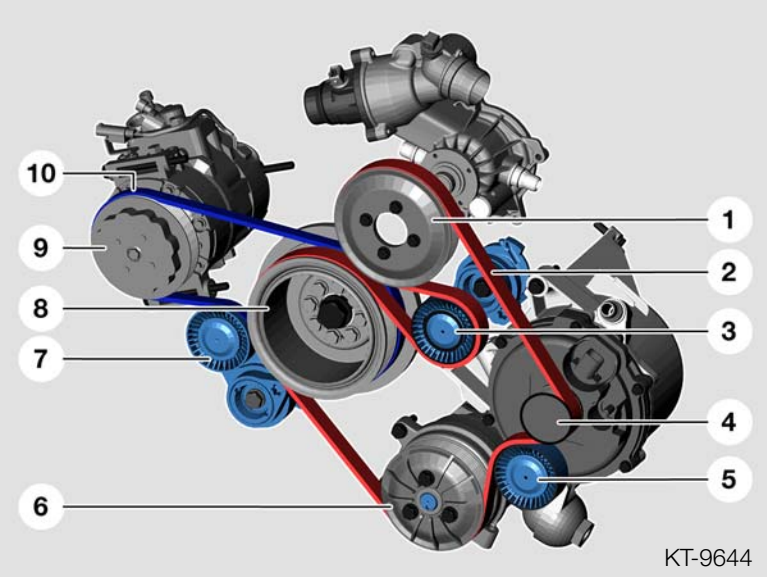

KT-9644

To remove the drive belts:

The tensioning pulley is pushed back using a Torx tool in the recess provided (1) and fixed in this position by inserting a locking pin as shown (2).

42-02-16

The cooling module of the N73 includes an external engine oil cooler. The engine oil cooler is located in front of the engine coolant radiator above the A/C condenser.

The engine oil flows from the oil pump through a channel in the crankcase to a connection on the alternator support. The alternator support has an oil thermostat (arrow to the right).

A wax element in the oil thermostat opens the supply flow to the engine oil cooler from an oil temperature of 100 °C to 130 °C.

A partial amount of engine oil will permanently bypass the oil thermostat, even when it is fully open and flows uncooled through the engine.

The engine oil cooler helps to keep the engine oil temperature below 150 °C.

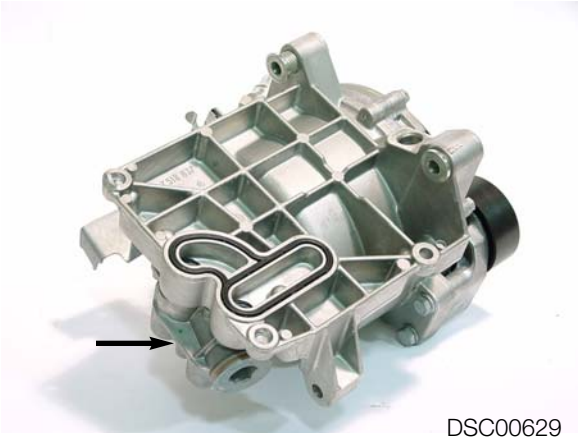
DSC00629

cardiagn.com

Cylinder Heads

The two N73 cylinder heads are a new development from BMW and have been adapted to the new direct injection system. The cylinder heads are equipped with Valvetronic valve gear and Bi-VANOS. The inlet camshaft and the Valvetronic eccentric shaft are jointly guided by a bridge support.

The ports for the high pressure fuel injectors are located on the intake side. The engine is equipped with a high pressure fuel pump for each cylinder head. Each cylinder head has a bucket-tappet drive on the exhaust camshaft for the high pressure fuel pump.

The secondary air ducts for subsequent exhaust gas treatment are integrated in the cylinder heads. The cylinder heads are cooled by the “cross-flow” principle. The cylinder heads are made from aluminum and are manufactured using gravity die-casting.

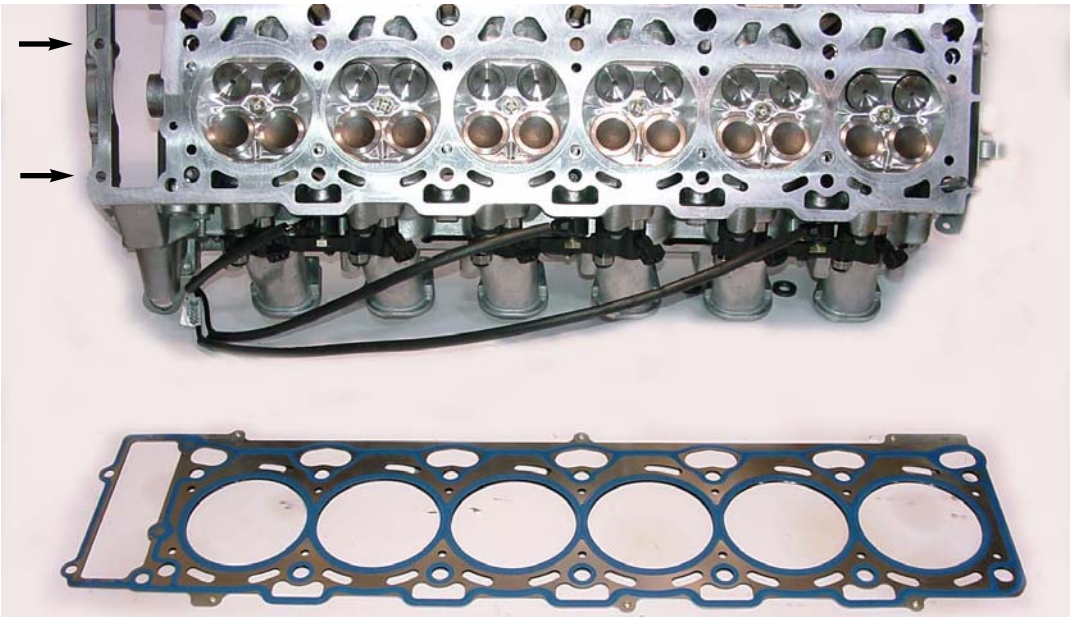

DCS00654

Cylinder Head Gaskets

The cylinder head gasket is a triple layer steel gasket with rubber coating. This gasket version is already established in previous engines (N62).

The cylinder head bolts for the N73 engine are M10x160 necked-down “stretch” bolts.

Note: These bolts should always be replaced when repairs are performed.

The lower part of the timing chain housing is bolted to the cylinder head using two M8x45 bolts (arrows above).

cardiagn.com

Cylinder Head - Preparation for Removal

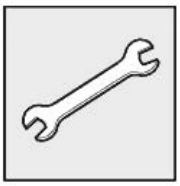

- Rotate the engine and set up cylinder number 1 valve gear “timing” for cylinder head removal, remove the VANOS solenoids, front cover and Bi-VANOS units *as per the Repair Instructions.*

Valvetronic

The Valvetronic system simultaneously varies the valve opening time and the intake valve opening lift between 0.3 mm and 9.85 mm, according to engine speed and load. This means that the air volume is controlled according to engine requirements. The valve gear is essentially the same as the N62 engine and has been adapted to the geometry of the N73 (with two more cylinders).

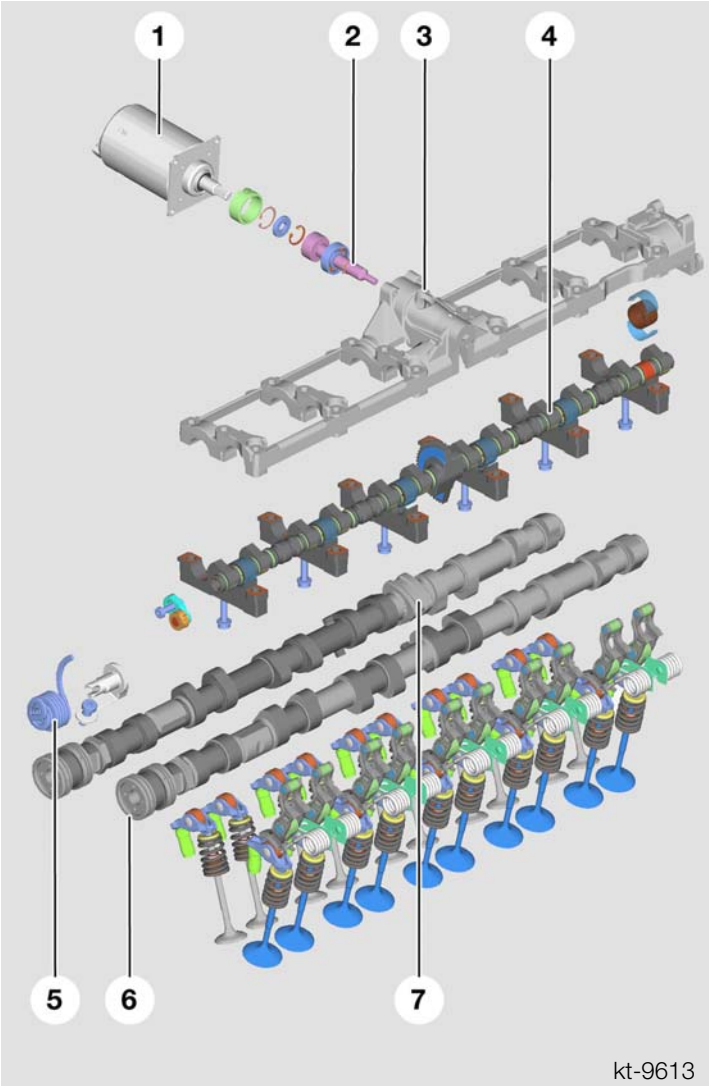

1. Valvetronic motor *
2. Intermediate shaft *
3. Bridge support *
4. Eccentric shaft
5. Torque compensation spring *
6. Intake camshaft
7. Exhaust camshaft with “triple” cam lobe for high pressure pump *

* Modifications have been made to these components making them different from the N62.

Note: To remove the cylinder head, it is necessary to remove the variable valve gear and eccentric shaft in order to gain access to the cylinder head bolts.

cardiagn.com

The Valvetronic motor is rubber mounted at the rear (1 lower left) to isolate it from the cylinder head cover. The Valvetronic motor is secured to the bridge support by the intermediate flange and has a hexagon drive (2 lower left), which engages into the intermediate shaft (7 lower right).

The intermediate shaft is mounted in the bridge support and is engaged by its spindle in the eccentric shaft teeth. This design provides ease of removal if the motor/gear fails.

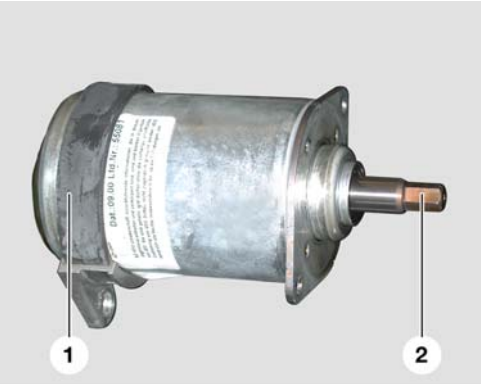

KT-9574

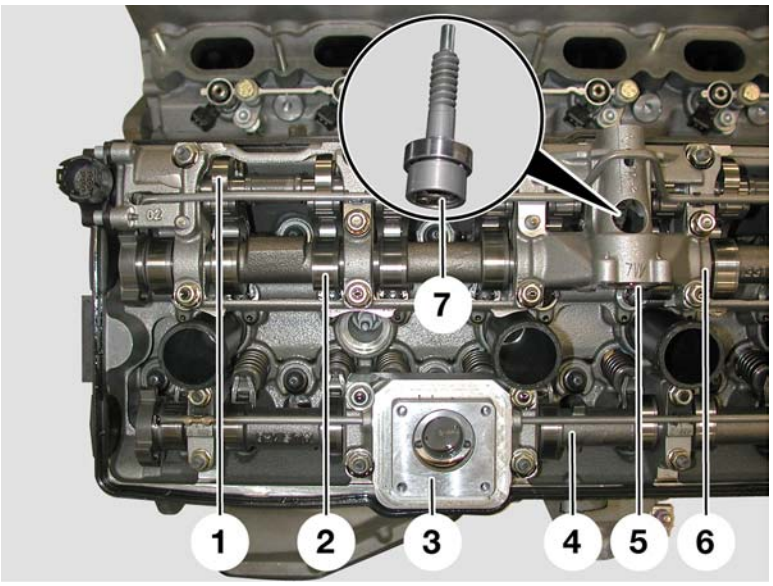

KT-9571

Diagram shown to the right:

1. Eccentric shaft
2. Intake camshaft
3. Mounting for high pressure fuel pump
4. Exhaust camshaft
5. Bridge support with receptacle for intermediate shaft and Valvetronic motor
6. Bridge support
7. Intermediate shaft

To remove the intermediate shaft, use the spanner tool #90 88 6 11 7 270 to unthread the locking collar (lower left). If you remove the outer snap ring (as shown lower right), the tensioning drive washer can be removed along with the tensioning ring behind it.

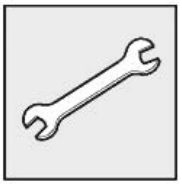

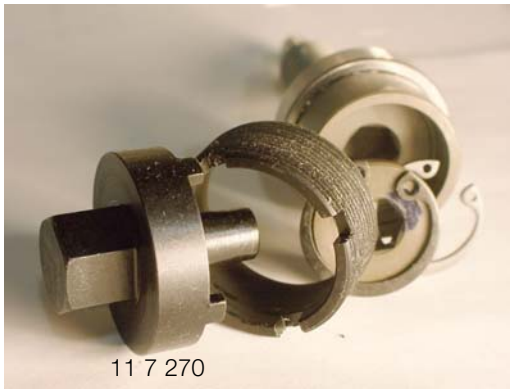

11 7 270

cardiagn.com

Note: When reinstalling the tension ring and tensioning drive washer, the ring eyelet must engage with the pin:

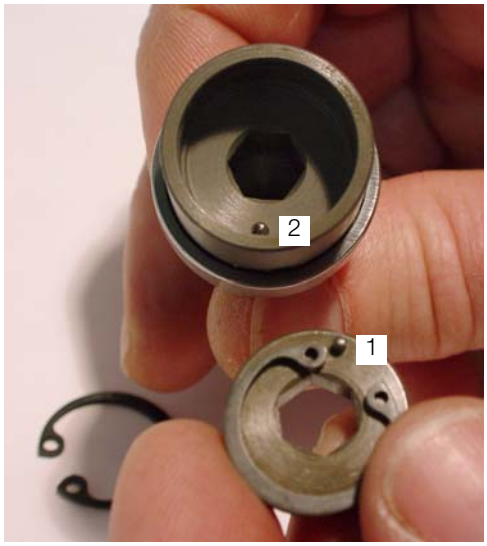

- On the drive washer (1)

  and

- In the intermediate shaft (2)

Test fit (insert) the Valvetronic motor hex shaft.

If it does not insert easily, remove the drive washer and flip the tension ring over to reassemble.

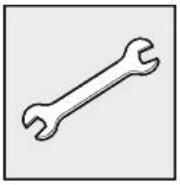

- Remove torque compensation spring and Valvetronic bridge support assembly ***as per the Repair Instructions (N62 section can be used).***
- Remove bank 1 - 6 cylinder head.

Questions (N62 section can be used)

Can the N73 cylinder heads be machined? _____ *If so, what is the limit?* _____

If so, how does this affect cylinder head gasket replacement? _____

_____

What is the correct torque procedure for the cylinder head bolts? _____

_____

_____

How are the BI-VANOS units distinguished? _____

_____

_____

What special tools (numbers) are required for N73 valve gear timing?

_____ _____

_____ _____

cardiagn.com

How are the camshafts identified? _____

What markings indicate correct camshaft bearing cap installation?
intake: _____
exhaust: _____

What is the correct postion for the hook sealing rings (6 & 7) when reassembling?

_____

1&2. Rear Oil Duct with Four Holes
3&4. Front Oil Duct with Four Holes
5. Front Oil Duct Outlets
6&7. Hook Sealing Rings.

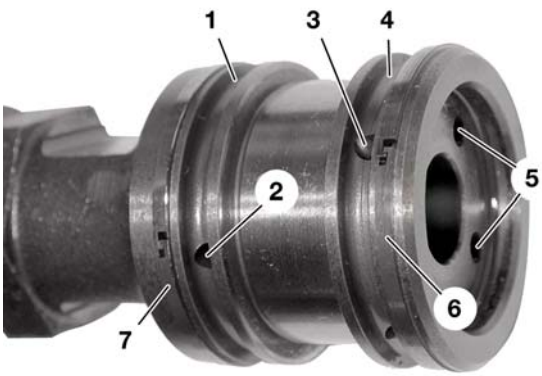

42-02-40

VANOS Oil Ports

Fuel Injector Removal

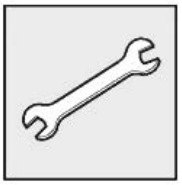

The fuel injector installed position and mounting pressure are maintained by a twin hold down fixture (one hold down fixture for every two fuel injectors).

The twin hold down fixtures are bolted to the cylinder head with spring washers, the correct mounting pressure is ensured by the contact pressure of the spring washers.

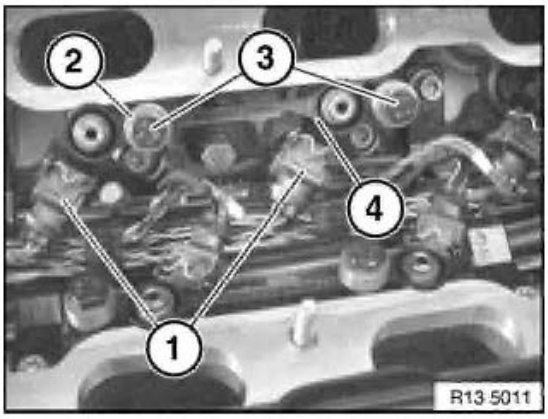

The high pressure fuel injectors are positioned on the intake side at a 30º angle to the cylinder head and reach directly into the combustion chamber between the two intake valves.

- Remove the fuel rail and disconnect plug connections (1).
- Remove bolts (3), nozzle holder (4), spring washers (2) and store exactly as removed for re-installation.
- Install special tool #13 1 430 and 13 5 250 on injector nozzles and drive out by slide hammering.

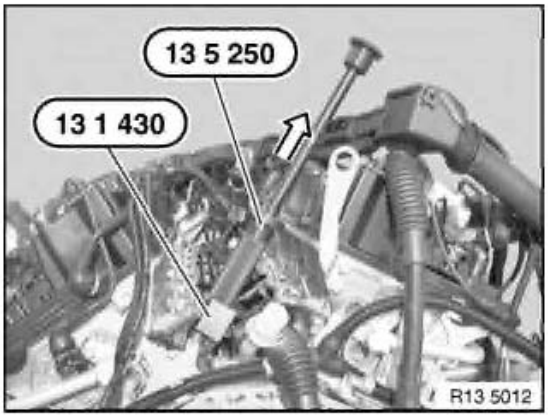

cardiagn.com

Engine Block

Oil Sump

The oil sump consists of two parts. The upper section of the oil sump is made from cast aluminum and is sealed to the crankcase with a rubber-coated sheet steel gasket. This section of the oil sump has a cross shaped cut out oil filter element recess. The upper section of the oil sump is inter connected to the oil pump and is sealed with a sealing ring. The double panel (noise insulation) lower section of the oil sump is flanged to the upper section of the oil sump.

1. Upper Section of The Oil Sump
2. Oil Pump
3. Oil Level / Condition Sensor
4. Lower Section of The Oil Sump
5. Oil Filter Housing
6. Oil Drain Plug

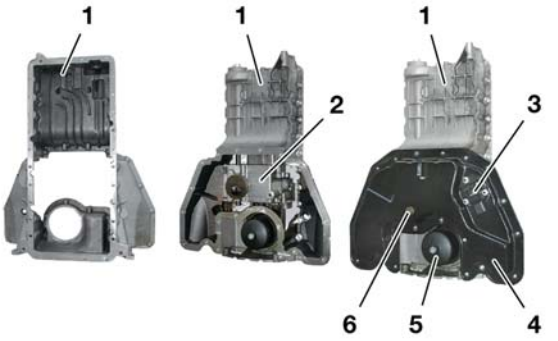

42-03-65

Oil Sump Components

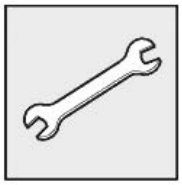

- Remove oil sump assembly and oil pump.

Oil Filter

The canister type oil filter (3) is located under the engine by the oil sump. The support for the oil filter is integrated in the rear oil pump cover. The oil filter housing (2 with o-ring) is threaded into the rear of the oil pump cover through an opening in the oil sump.

A drain plug is integrated in the oil filter housing for draining the filter assembly before the housing is removed (1 with o-ring).

The filter element support dome contains an over pressure relief valve. If the filter element is blocked, this valve allows a bypass of unfiltered engine oil around the element to supply lubrication to the engine.

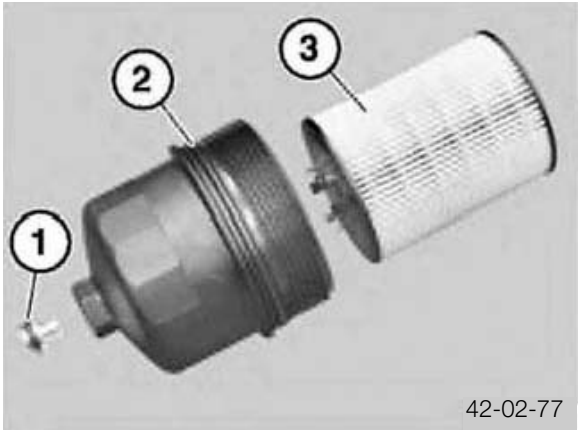

42-02-77

cardiagn.com

Oil Pump

The oil pump is mounted at an angle to the crankshaft bearing cap and is driven by the crankshaft using a roller chain. The oil pump is a two-stage gear oil pump with two gear clusters.

1. Mounting points
2. Oil pump drive shaft
3. Oil pressure from pump to engine
4. Control valve (Pump Stage/Pressure Control)
5. Oil pressure control tube from the engine to the control valve.
6. Oil pickup strainer
7. Pressure relief valve (over 15 Bar)
8. Oil filter

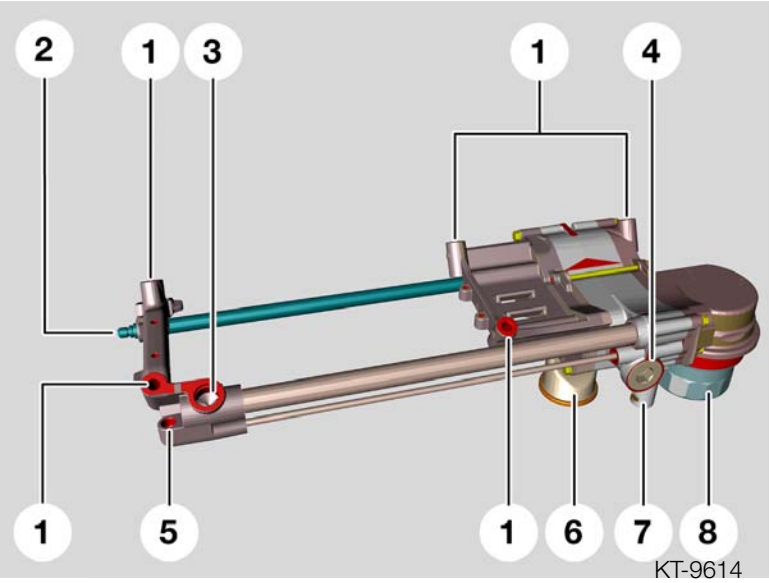

Oil Pump

Pressure Control

The oil pressure control valve in the oil pump has two functions:

1. Deactivates stage two oil pump circuit above 2 bar. Stage two is only active in the lower speed range. This is to ensure that there is always sufficient oil pressure for the VANOS units even at high oil temperatures and low speeds. The oil pump power consumption is reduced by deactivating stage two.

2. Monitoring the required oil pressure for the engine. The piston in the control valve is moved by a spring against the engine control pressure which is returning from the engine. This means that precise monitoring of the actual engine oil pressure is possible.

A separate pressure relief valve in the oil pump automatically opens at the maximum pressure of approximately 15 bar. This prevents damage in the oil pump especially at low oil temperatures.

- Disassemble oil pump for visual inspection.

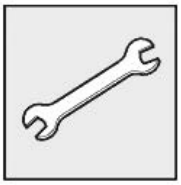

cardiagn.com

Crankshaft

The N73 uses a forged steel crankshaft (1 - front).

Each crankshaft throw has two counterweights for balancing the moving masses (12 counterweights in total).

The crankshaft is supported by seven main bearings, the seventh is the thrust bearing.

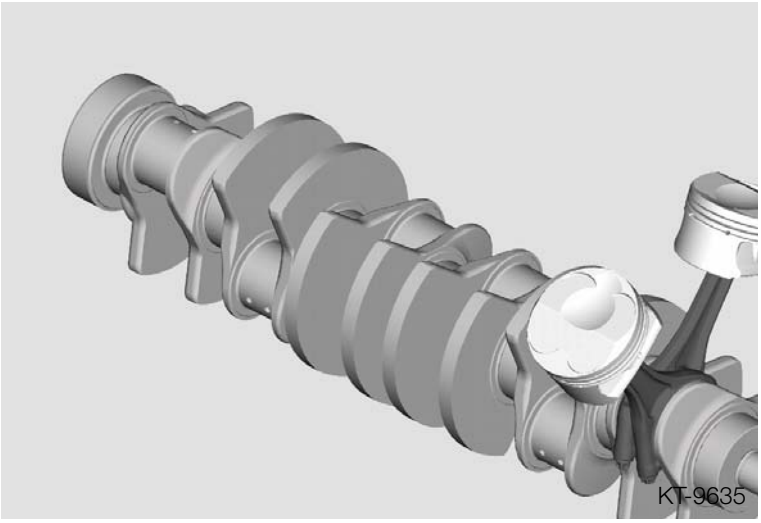

Crankshaft

Crankshaft Thrust Bearing

The thrust bearing halves are multiple pieces that are assembled as one part for the the number seven main bearing at the rear of the engine.

Piston and Connecting Rod

The iron coated cast aluminum alloy pistons are “domed” with valve reliefs in the crowns (1). The recess (2) directs the combustible mixture directly under the spark plug and prevents the combustion chamber from being divided into two parts.

Piston rings:
- First piston ring groove = square ring
- Second piston ring groove = taperface ring
- Third piston ring groove = two-part oil control ring

Note: Due to the shaping of the piston crown and the wrist pin offset, the pistons are cylinder bank specific (crown index arrow always points to the front of the engine).

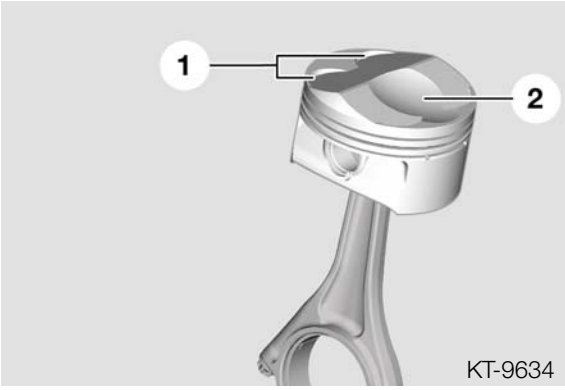

The forged steel connecting rod and cap is separated by the familiar “cracked” process. The large end is angled at 30º allowing sufficient articulation in a very compact space. The pistons are cooled by oil jets spraying under the exhaust side of the piston crown.

cardiagn.com

- Remove piston/connecting rod assembly from any cylinder of the bank (caution - use care around the oil spray jet).
- Remove crankshaft thrust bearing cap for visual inspection.
- Measure the piston diameter.
- Measure the cylinder bore that the piston was removed from.

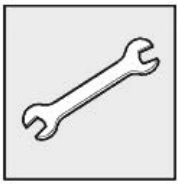

Questions (N62 section can be used)

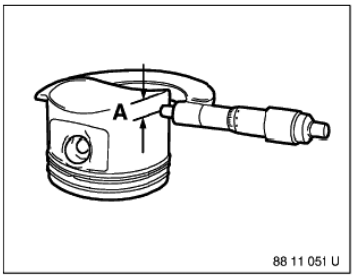

What is the piston diameter? _____

What are the cylinder bore measurements? Fill in the chart:

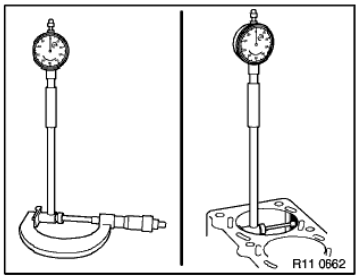

	Side to Side	Front to Back
Top		
Center		
Bottom		

What is the piston installation clearance on a "used" piston? _____

What is the permissible total wear tolerance between piston and cylinder? _____

What is the permitted out-of-round of a cylinder bore? _____

What is the permitted conicity (taper) of a cylinder bore? _____

How are the pistons identified for the cylinder bank? _____

What is the correct way to install connecting rods (on the pistons) for cylinder bank 1 - 6?

_____

cardiagn.com

Crankcase

The crankcase is a one-piece “open deck” design and is made entirely from AluSil. In mass production, the cylinder bores are finished by an etching procedure. This involves etching out a thin aluminium layer from the cylinder walls. By doing this, the high strength silicon crystals are exposed. The silicon crystals form a high strength running surface for the pistons.

Open Deck: Exposed cylinder coolant jacket

Lubrication System - Technical Data

The recommended oil is BMW High Performance 5W-30 Synthetic Oil
* P/N 07 51 0 017 866

Oil Capacity in Liters (quarts)	Explanation
8.5 (9.0)	Filling capacity with oil filter change

Oil Pressure in Bar	Explanation
1.0	Minimum oil pressure @ 20º C
4.0 - 8.0	Maximum oil pressure @ 20º C

Oil Delivery Capacity	Explanation
9 - 12 liters/minute	At idle speed (550 rpm) @ 20º C
50 - 55 liters/minute	At maximum engine speed (6500 rpm) @ 20º C

cardiagn.com

Lubrication System

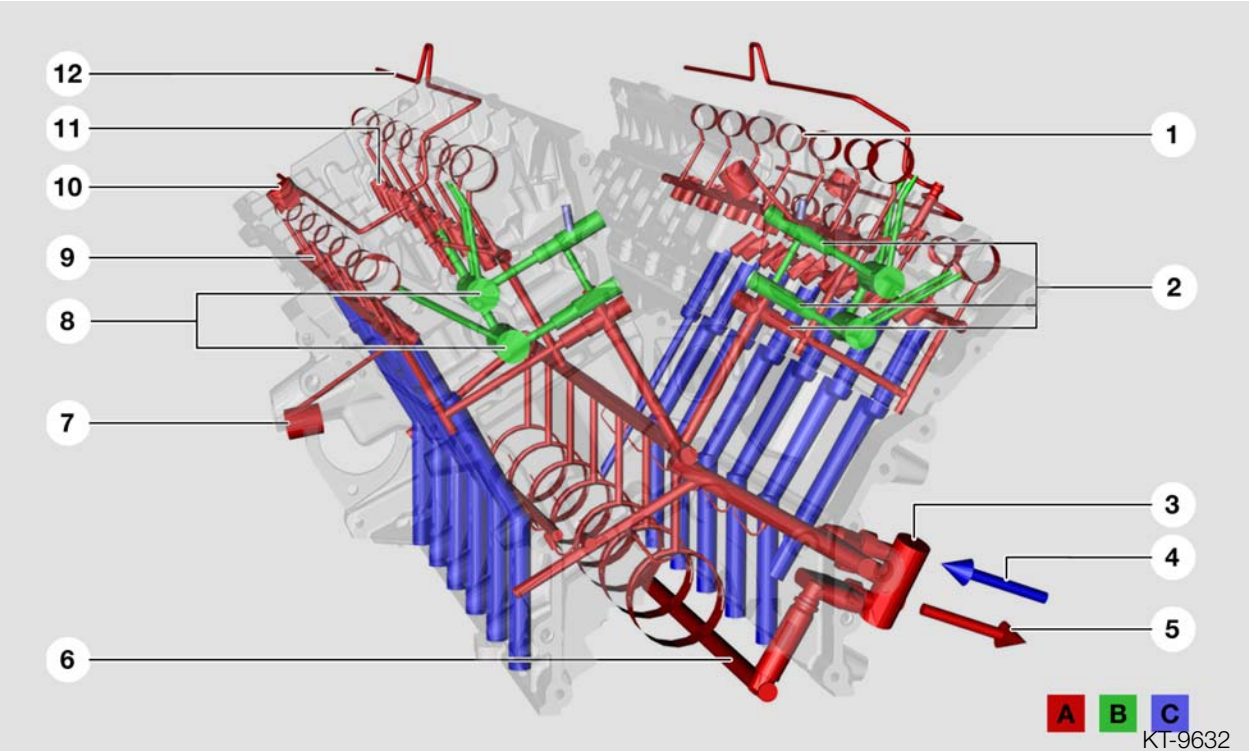

Oil Circuit (view from engine front)

A. Oil pressure from oil pump
B. Oil supply to VANOS units
C. Oil return
1. Oil supply to intake camshaft
2. Oil non-return valves
3. Oil circuit in oil thermostat
4. Oil return from oil cooler
5. Oil supply to oil cooler
6. Oil supply from oil pump
7. Oil supply , chain tensioner
8. Oil supply , VANOS solenoid valves
9. Oil supply to exhaust camshaft
10. Oil supply to high pressure injection pumps
11. Oil supply to HVA elements
12. Oil supply to Valvetronic eccentric shaft

The engine oil is supplied by the oil pump to the lubrication points in the engine block and is pumped into the cylinder heads. The following components in the crankcase and cylinder head are supplied with engine oil:

Crankcase

- Crankshaft bearings
- Oil jets for piston cooling
- Oil jet for the drive chain (bank 7-12)
- Tensioning rail for drive chain (bank 1-6)

Cylinder head

- Chain tensioner
- Guide rail on cylinder head
- Hydraulic valve adjustment elements (HVA)
- VANOS supply
- Camshaft bearings
- Overhead oil tubes for the valve gear

cardiagn.com

Cooling System

Coolant Circuit - 14.94 Liter (15.8 Quart) Capacity

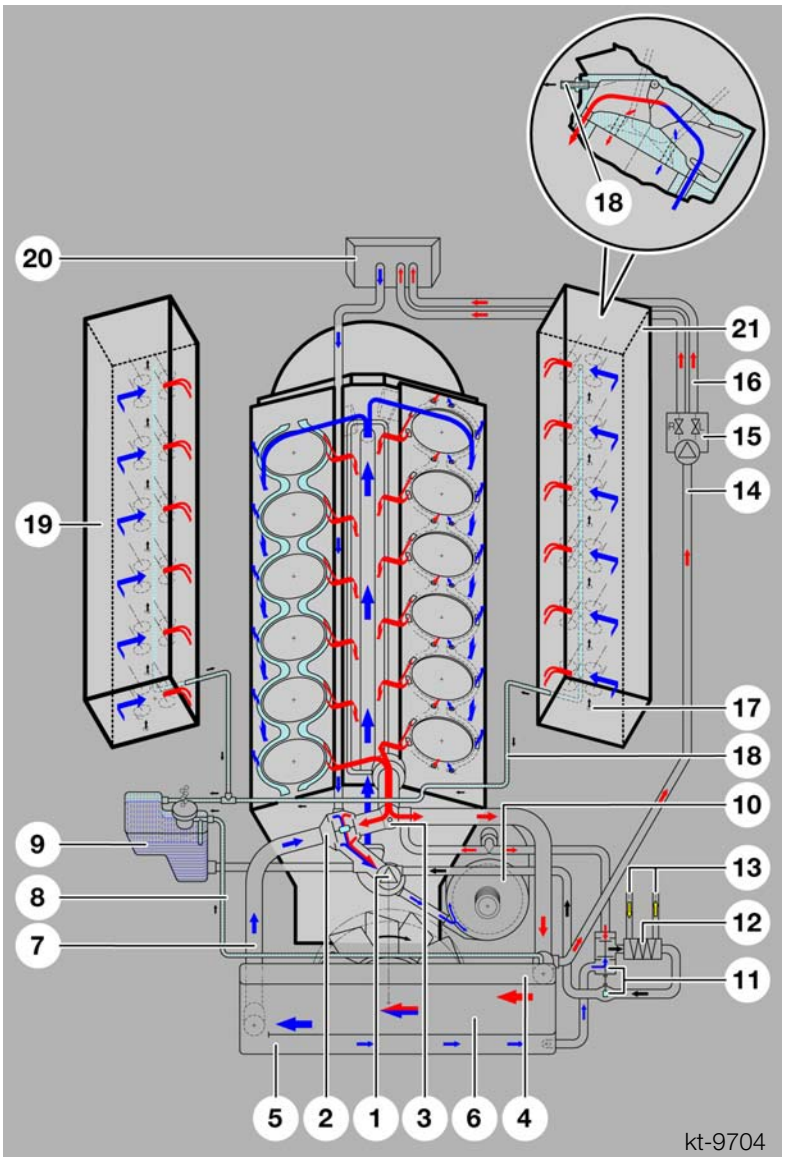

Cooling System (Circuit Flow)

1. Water pump
2. Thermostat housing with MAP thermostat
3. Coolant temperature sensor
4. Radiator
5. Partition wall (low temperature area)
6. Radiator (high temperature area)
7. Return flow (cool)
8. Radiator vent line
9. Coolant reservoir
10. Water cooled alternator
11. Thermostat for transmission oil heat exchanger
12. Oil/water heater exchanger for automatic transmission
13. Transmission oil line connections
14. Heater supply hose (hot)
15. Water valves / electric pump
16. Heater inlet hoses
17. Holes (cylinder jacket venting)
18. Cylinder head vent hose
19. Cylinder head, bank 1-6
20. Heater core(s)
21. Cylinder head, bank 7-12

cardiagn.com

Coolant Circuit

The coolant flow has been optimized allowing the engine to warm up as quickly as possible after a cold start as well as even and sufficient engine cooling while the engine is running. The cylinder heads are supplied with coolant in a cross-flow pattern. This ensures more even temperature distribution to all cylinders.

The cooling system ventilation has been improved and is enhanced by using ventilation ports in the cylinder heads and in the radiator. The air in the cooling system accumulates in the reservoir/expansion tank. When a pressure of 2 bar is reached in the expansion tank, the air is bled out by the pressure relief valve in the reservoir cap.

Note: The ventilation ports in the front of the cylinder heads provide quicker “self bleeding” during a routine coolant exchange. The complex cooling system and the small ventilation ports require that time should be allowed after the cooling system has been filled for the air to escape.

Coolant flow in the Engine Block (similar to N62)

The coolant flows from the water pump through the feed pipe in the engine's V and to the rear of the engine block. This area has a cast aluminum cover. From the rear of the engine, the coolant flows to the external cylinder walls and from there into the cylinder heads.

The coolant then cross flows through the cylinder heads (exhaust to intake) into the engine block inner coolant jacket into the engine “V” and through the return connection to the thermostat housing. When the coolant is cold it flows from the thermostat (closed) directly into the water pump and back to the engine (recirculating for faster warm up).

When the engine reaches operating temperature (85 ºC-110 ºC), the thermostat opens the entire cooling circuit to include the radiator.

Notes:

cardiagn.com

The coolant flows to the rear of the engine block, from there through the side channels to the cylinder walls and then into the cylinder heads (lower left picture). The cast aluminum cover at the rear of the engine block (with sealing bead) is shown on the lower right.

42-02-59

42-02-58

Water Pump/Thermostat Housing

The water pump is combined with the thermostat housing and is bolted to the timing case lower section.

1. Map-controlled themostat (radiator cool return flow).
2. Electrical connection for Thermostat Heating element.
3. Thermostat Mixing Chamber
4. Temperature Sensor (hot coolant from engine)
5. Radiator in-flow (hot coolant from engine)
6. Heat exchanger (transmission oil return flow)
7. Leakage Chamber (evaporation space)
8. Alternator in-flow (cool supply)
9. Water Pump
10. Expansion Tank Connection

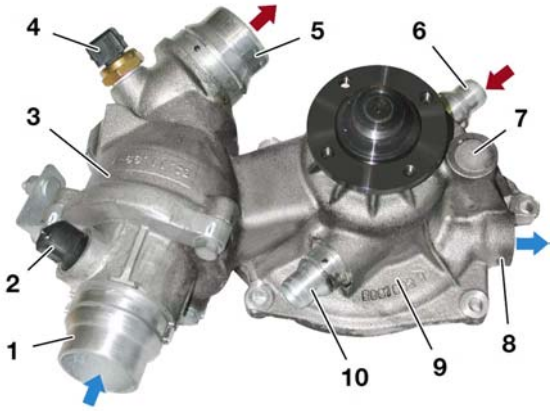

42-02-60

Water Pump / Thermostat Housing

Caution during installation of the water pump: The impeller is made from reinforced plastic.

- Reassemble engine using your notes taken during disassembly in addition to the Repair Instructions.

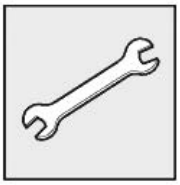

cardiagn.com