Technical training.
Product information.

F25 Driver Assistance Systems

cardiagn.com

Edited for the U.S. market by:
BMW Group University
Technical Training
ST1106 2/1/2011

BMW Service

General information

Symbols used

The following symbol is used in this document to facilitate better comprehension or to draw attention to very important information:

⚠

Contains important safety notes and information that needs to be observed strictly in order to guarantee the smooth operation of the system.

Information status and national-market versions

BMW Group vehicles meet the requirements of the highest safety and quality standards. Changes in requirements for environmental protection, customer benefits and design render necessary continuous development of systems and components. Consequently, there may be discrepancies between the contents of this document and the vehicles available in the training course.

This document basically relates to the European version of left hand drive vehicles. Some operating elements or components are arranged differently in right-hand drive vehicles than shown in the graphics in this document. Further differences may arise as the result of the equipment specification in specific markets or countries.

Additional sources of information

Further information on the individual topics can be found in the following:

- Owner's Handbook
- Integrated Service Technical Application.

Contact: conceptinfo@bmw.de

©2010 BMW AG, Munich

Reprints of this publication or its parts require the written approval of BMW AG, München

The information contained in this document forms an integral part of the technical training provided by the BMW Group and is intended for its course trainers and participants. Refer to the latest relevant information systems of the BMW Group for any changes/additions to the Technical Data.

Status of the information: **July 2010**
VH-23/International Technical Training

cardiagn.com

F25 Driver Assistance Systems

Contents

1. Introduction **1**
1.1. Bus System Overview 2

2. High-beam assistant **5**

3. Park Distance Control **12**

4. Rear view camera **13**

5. Top view **15**

6. Dynamic Cruise Control **17**
6.1. Introduction 17
6.2. Control functions 17
6.2.1. Cruise control 17
6.2.2. Acceleration and deceleration 17
6.2.3. Cruise control when cornering 17
6.2.4. Prioritization of partial setpoint values 18
6.2.5. Estimation of disturbance force 18
6.2.6. Activation of the actuators 18

7. Hill Descent Control **19**

8. Head-Up Display **20**

cardiagn.com

cardiagn.com

F25 Driver Assistance Systems

1. Introduction

BMW has long since offered a comprehensive range of driver assistance systems. These make it easier for the driver to control the vehicle, by:

- providing the driver with information
- prompting the driver on how to react or
- actively intervening in the way the vehicle is driven.

The F25 is equipped with the following driver assistance systems:

- High-beam assistant
- Park Distance Control
- Reversing camera
- Top View
- Cruise control with braking function
- Hill Descent Control
- Head-Up Display

cardiagn.com

F25 Driver Assistance Systems

1. Introduction

1.1. Bus System Overview

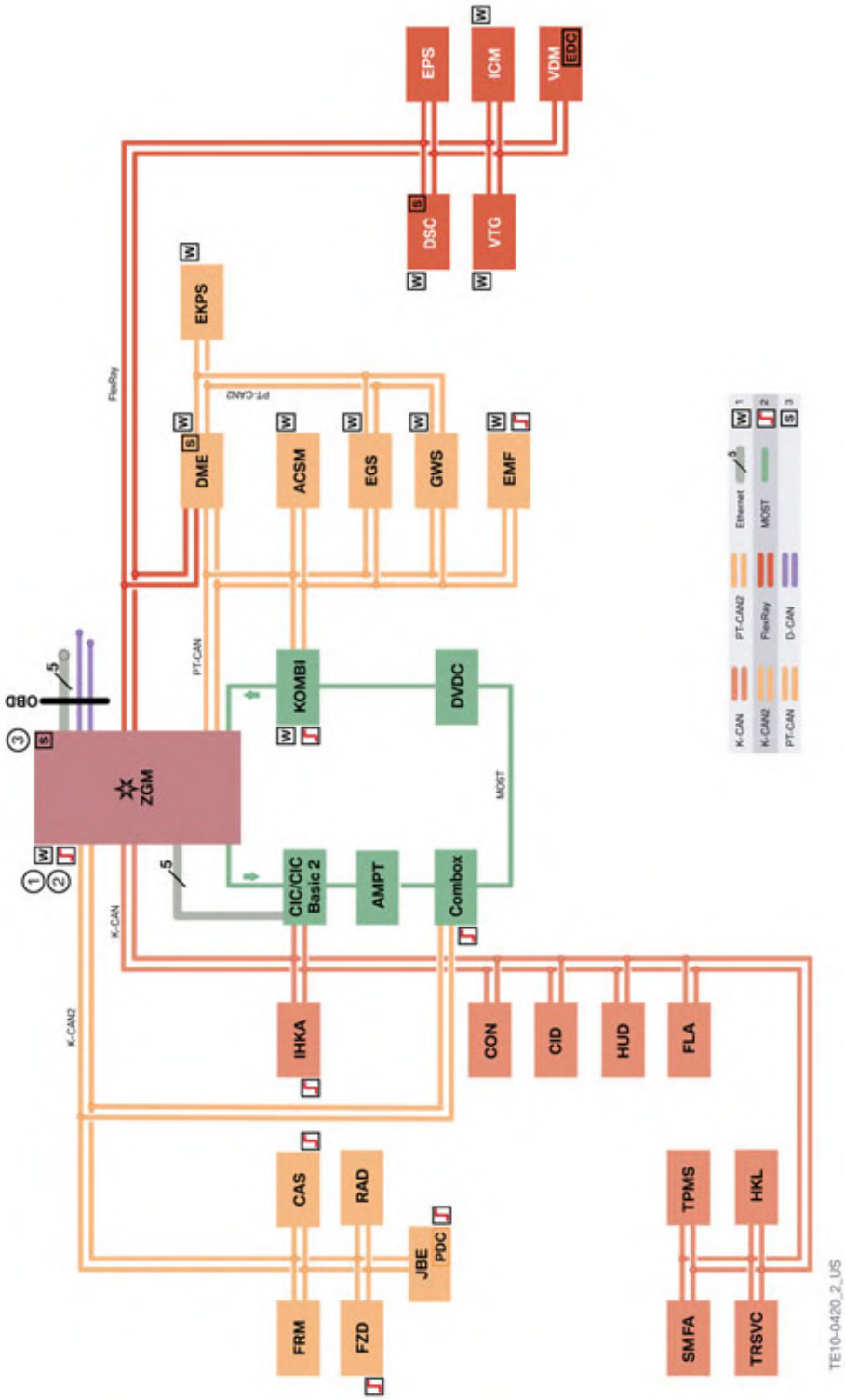

F25 Bus system overview

cardiagn.com

F25 Driver Assistance Systems

1. Introduction

Index	Explanation
1	Wakeable control units
2	Control units with wake-up authorization
3	Start-up-device control units for starting up and synchronizing the FlexRay bus system
ACSM	Advanced Crash Safety Module
AMPT	Top HiFi amplifier
CAS	Car Access System
CID	Central Information Display
COMBOX	Combox (Combox multimedia, Combox multimedia with telematics)
CON	Controller
D-CAN	Diagnosis-on CAN
DME	Digital Engine Electronics
DSC	Dynamic Stability Control
DVDC	DVD changer
EDC	Electronic Damper Control EDC
EGS	Electronic transmission control unit
EKPS	Electric fuel pump
EMF	Electromechanical parking brake
EPS	Electronic power steering (electromechanical power steering)
Ethernet	Wired data network system for local data networks
FLA	High-beam assistant
FlexRay	Fast, preconfigured and error-tolerant bus system for automotive use
FRM	Footwell module
FZD	Roof function center
GWS	Gear selector switch
HEADUNIT	Headunit (Car Information Computer or Car Information Computer Basic II)
HKL	Automatic luggage compartment lid actuation
HUD	Head-Up display
ICM	Integrated Chassis Management
IHKA	Automatic integrated heating and A/C control unit
JBE	Junction Box Electronics
K-CAN	Body controller area network
K-CAN2	Body controller area network 2
KOMBI	Instrument panel
MOST	Media Oriented System Transport

cardiagn.com

F25 Driver Assistance Systems

1. Introduction

Index	Explanation
OBD	On-board diagnosis (diagnostic socket)
PDC	Park Distance Control
PT CAN	Drive train Controller Area Network
PT CAN2	Drive train Controller Area Network 2
RAD	Radio
SMFA	Driver's seat module
TPMS	Tire Pressure Monitoring System
TRSVC	Control unit for camera systems
VDM	Vertical Dynamics Management
VTG	Transfer box
ZGM	Central gateway module

cardiagn.com

F25 Driver Assistance Systems

2. High-beam assistant

The high-beam assistant FLA (Automatic high beams SA 5AC) of the F25 is based on the F01/F02 FLA system.

The F01 system combines three functions in one and uses a KAFAS control unit that is not used here.

As in the F01 this system is also designed to assists the driver in the use of the high-beam headlights.

Depending on the traffic situation, the prevailing ambient light conditions and which lights on the vehicle have been switched on, the FLA switches on the high-beam headlights automatically and thereby relieves the driver of having to switch on the high-beam headlight on manually.

Note: Automatic high beams 5AC must be ordered with ZPP Premium Package

High-beam headlight can still be switched on and off manually as usual. The driver always has the capability, and indeed the obligation, to override the system whenever the situation requires it.

The high-beam assistant function in the F25 is implemented with the use of the FLA control unit and its own dedicated video camera.

The FLA video camera is a simplified image sensor that can identify the color and intensity of light.

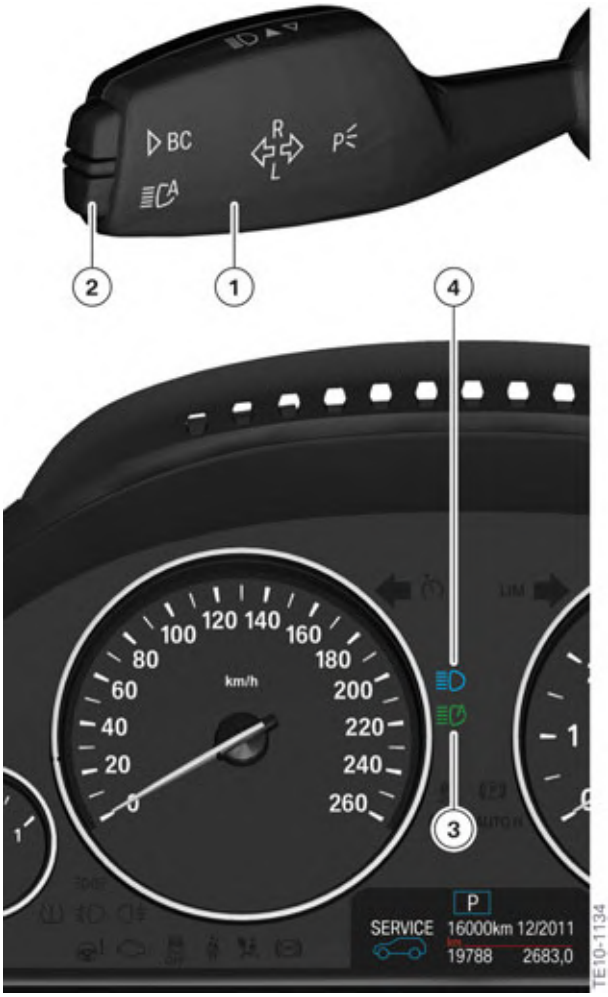

High-beam assistant display and button

cardiagn.com

F25 Driver Assistance Systems

2. High-beam assistant

Index	Explanation
1	Stalk
2	High-beam assistant button
3	Display when high-beam assistant activated
4	Display when high-beam headlight on

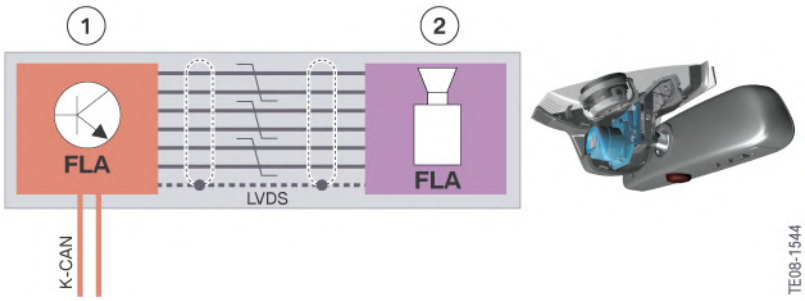

High-beam assistant FLA control module and video camera

Index	Explanation
1	High-beam assistant FLA control unit with connection to vehicle electrical system on K-CAN
2	High-beam assistant FLA video camera, image data sent from the video camera to the FLA control unit along the LVDS data line

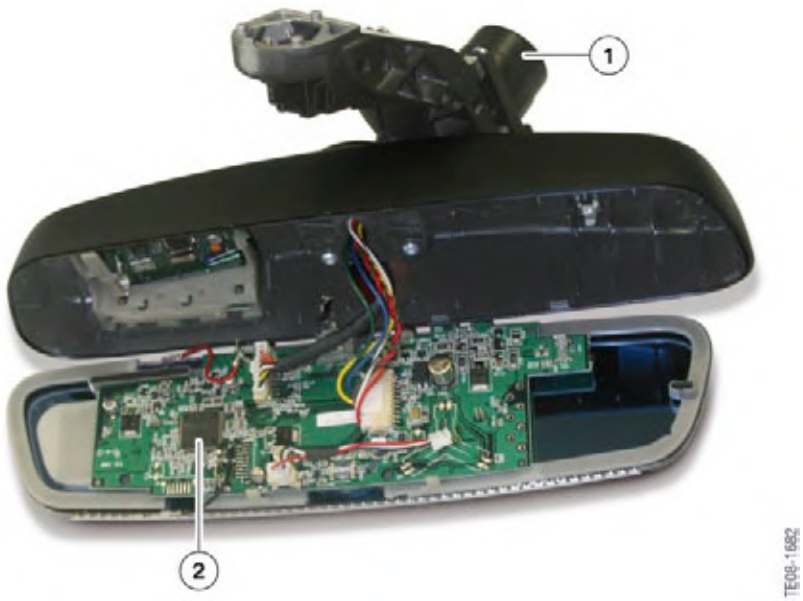

High-beam assistant FLA control unit and video camera location (F01/F02)

Index	Explanation
1	High-beam assistant video camera
2	High-beam assistant control unit in the rear-view mirror

cardiagn.com

F25 Driver Assistance Systems

2. High-beam assistant

In order for the driver to be able to activate and use the high-beam assistant, the light switch must first be set to Automatic or light switch position II. The high-beam assistant has its own activation button in the turn signal/ main-beam stalk on the steering column. While the high-beam assistant can be activated at any time with the light switch in position II, there is an additional prerequisite in the Automatic position whereby the automatic driving lights controller must have already switched on the lights.

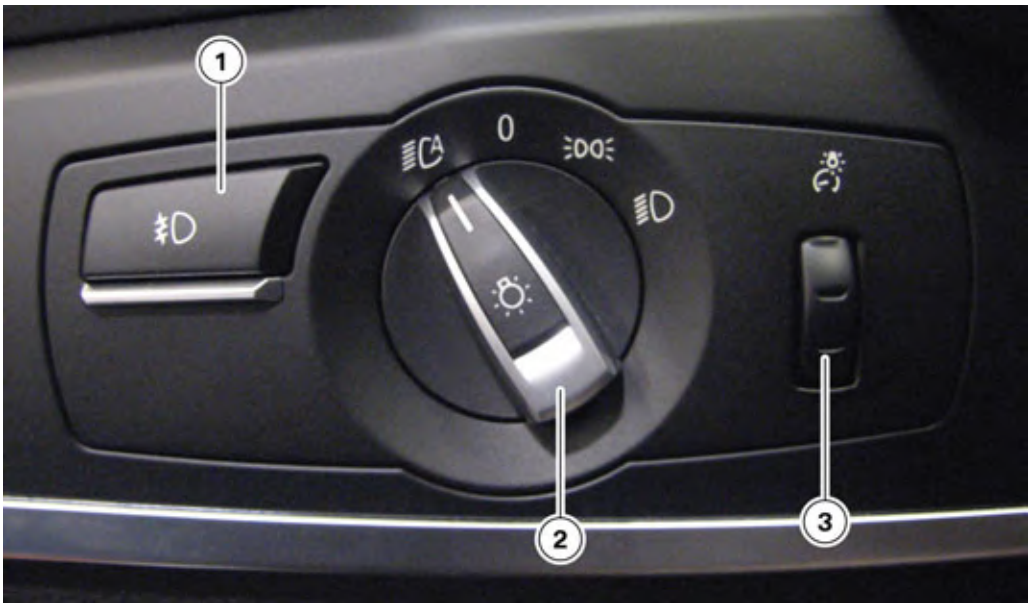

Light switch

Index	Explanation
1	Foglight
2	Lightswitch
3	Knurled wheel to adjust instrument lighting

Note: The high-beam assistant is not a substitute for the driver's decision of when to use the high-beam headlights. For safety reasons, always manually dip the high-beam headlights when confronted with oncoming traffic.

cardiagn.com

F25 Driver Assistance Systems

2. High-beam assistant

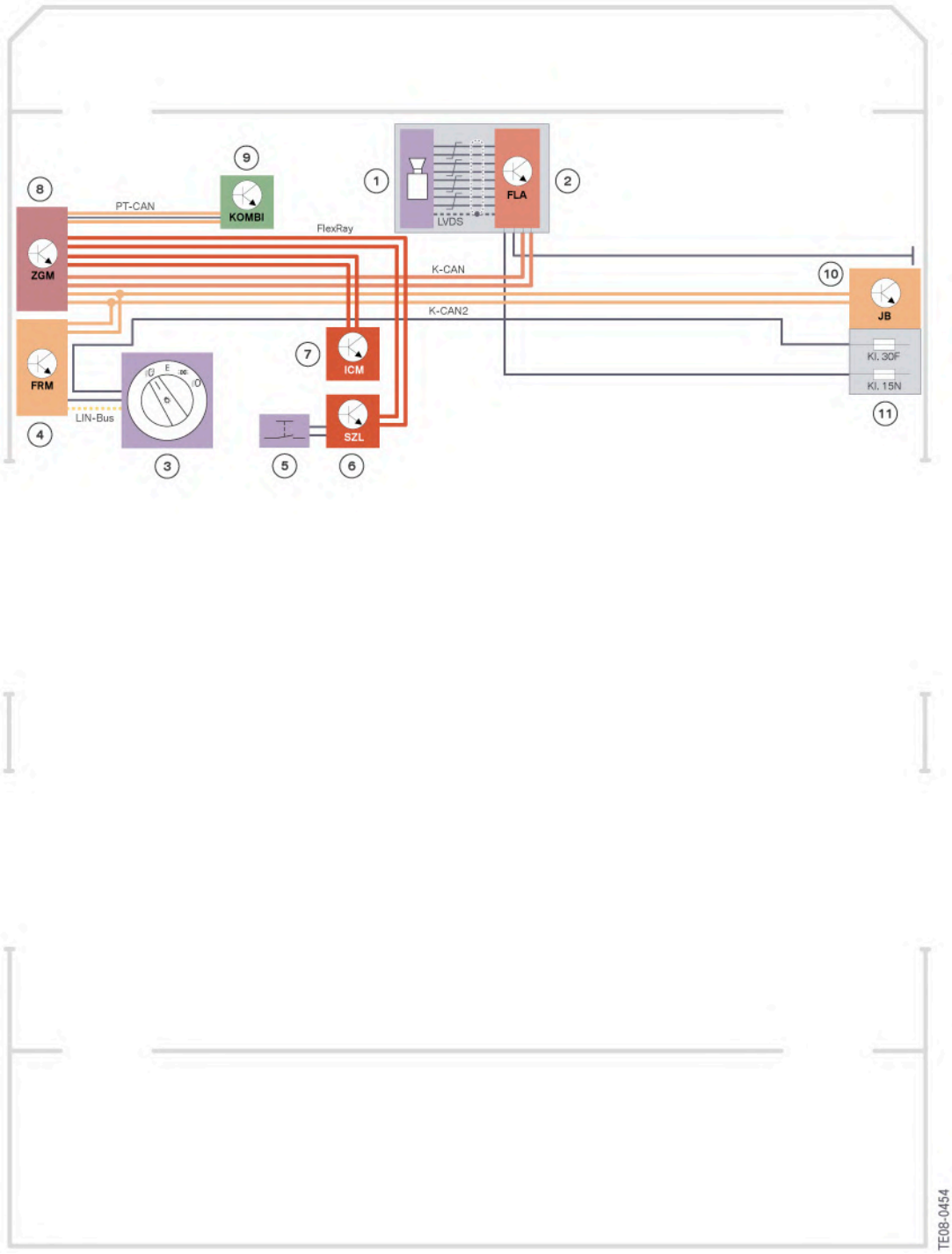

Circuit diagram for high-beam assistant (F01/F02)

cardiagn.com

F25 Driver Assistance Systems

2. High-beam assistant

Index	Explanation
1	Forward-pointing FLA video camera on the base of the rear-view mirror.
2	FLA control unit in the rear-view mirror
3	Light switch Position A or position II
4	Footwell module FRM Main-beam headlights on/off
5	High-beam assistant on/off button on the turn signal stalk on the steering column
6	Steering column switch cluster SZL with turn signal stalk on the steering column
7	Integrated Chassis Module ICM, road-speed signal
8	Central gateway module ZGM
9	Instrument cluster Function display
10	Junction box electronics
11	Front distribution box

Detection of light in the field of view of the video camera

In both versions of the FLA, the video cameras monitor the area ahead of the vehicle for light sources. Vehicles travelling in front and oncoming traffic become recognizable at distances of up to approximately 400 m. The detection range of the video camera is approximately 1,000 m. The video camera has a horizontal viewing angle of approximately 15° to the left and right and a vertical viewing angle of approximately 5° up and down. When active, these special video cameras capture dots of light and, in the process, are able to distinguish between various parameters, e.g. light color and light intensity.

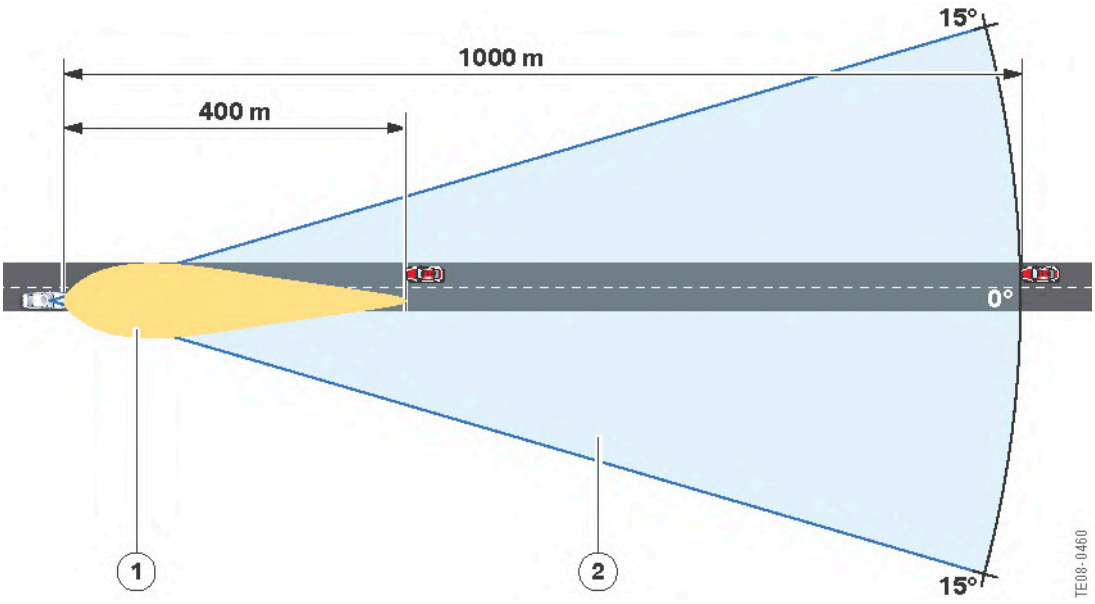

Field of view of the FLA video camera.

cardiagn.com

Index	Explanation
1	Recognition range
2	Detection range

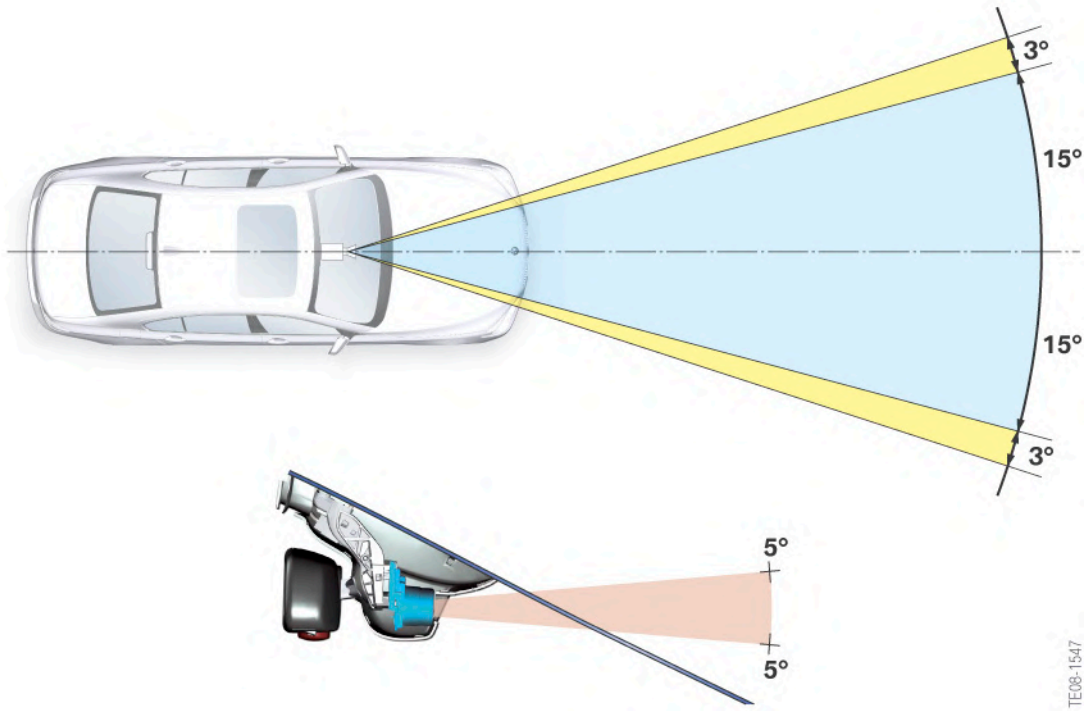

Horizontal/vertical field of view of the FLA video camera.

Evaluation of image data

The various dots, colors and intensities of light captured by the camera are evaluated by the control unit and, based on the control unit's assessment, a switch-on or switch-off recommendation is sent from the FLA control unit to the footwell module. In addition to the switch-on/switch-off recommendation, road speed is also taken into account. At speeds below 38 km/h/24 mph, the FLA is switched off; at speeds higher than 50 km/h/31mph, it may be switched on, depending on all other parameters. If the vehicle is in an environment with adequate light, the main-beam headlights do not switch on. The FLA control unit or sends a switch-off recommendation to the footwell module.

These conditions could be:

- Daylight
- Twilight
- Road lighting
- Illuminated places

cardiagn.com

F25 Driver Assistance Systems

2. High-beam assistant

The system is designed to switch off the main-beam headlights automatically in response to the following conditions.

- Oncoming traffic
- Preceding traffic
- Detection of background brightness (twilight, street lamps, illuminated places, etc.)
- Driving speed too low.

Control of the main-beam headlights

At the request of the FLA (KAFAS) control unit, the actual switching on and off of the main-beam headlights is always carried out by the footwell module, which is responsible for all of the exterior lighting. To this end, the FLA control unit uses its own image data to assess background brightness. The decision of the FRM to activate the dipped-beam headlights in A mode is made in the FRM independently of the FLA function. The FRM receives the light signal from the RLSS. System limitations In various situations, and under specific environmental conditions, the limitations of a camera-based system begin to impact on functionality.

These limitations may be reached in the following situations.

- Extremely unfavorable weather conditions (e.g. fog or heavy snowfall)
- Poorly illuminated road users (e.g. riders on small motorcycles, cyclists, pedestrians)
- Individual driving situations (e.g. sharp bends, steep brows and hollows of hills, traffic coming at right angles from left or right)
- Differentiation between different light sources, reflective traffic signs, etc.
- No recognition of oncoming traffic is possible if only the cone of light is within the video camera's field of view.
  Recognition is possible only if the light source itself is within the field of view of the video camera.

The driver is able to intervene at any time and override the assistance system by switching the main-beam headlights on and off manually. The driver always bears sole responsibility for the vehicle and the control of the vehicle's lighting.

cardiagn.com

F25 Driver Assistance Systems

3. Park Distance Control

The Park Distance Control PDC (SA 508) assists the driver when maneuvering in and out of a parking space. The current distance from an obstruction is indicated by acoustic signals and on a visual display. The Park Distance Control of the F25 accesses measured data acquired by four ultrasonic sensors on the front and rear bumpers.

PDC is activated in response to the engagement of reverse gear or the operation of the PDC button next to the gear selector switch.

The driver receives feedback via the speaker system on the distance measurements and distance warnings in the form of acoustic signals.

In vehicles equipped with CID (SA 609, 663), feedback is also displayed on the CID.

F25 Display of distance warning in CID

PDC cannot replace the driver's personal judgement of the traffic situation. Also check the traffic situation around the vehicle by looking directly. Otherwise there is a risk of accidents occurring, due to other road users or objects that are outside the detection range of the PDC for example. Loud sound sources outside and inside the vehicle could drown out the PDC signal.

cardiagn.com

F25 Driver Assistance Systems

4. Rear view camera

A prerequisite for the optional rear view camera (SA 3AG) to be fitted in the F25, is that the optional PDC (SA 508) and CID (SA 609, 663) is also fitted. The rear view camera is fitted right of center near to the handle recess on the tailgate.

In a vehicle equipped with the reversing camera, the controller and the operating menu can be used to toggle between the basic PDC display and the reversing camera image with PDC.

Reversing camera display with PDC

To support the driver, turning-circle lines, lane/parking-aid lines, obstacle markings and, where applicable, zoomed views of the trailer tow hitch are faded into the reversing camera image.

cardiagn.com

F25 Driver Assistance Systems

4. Rear view camera

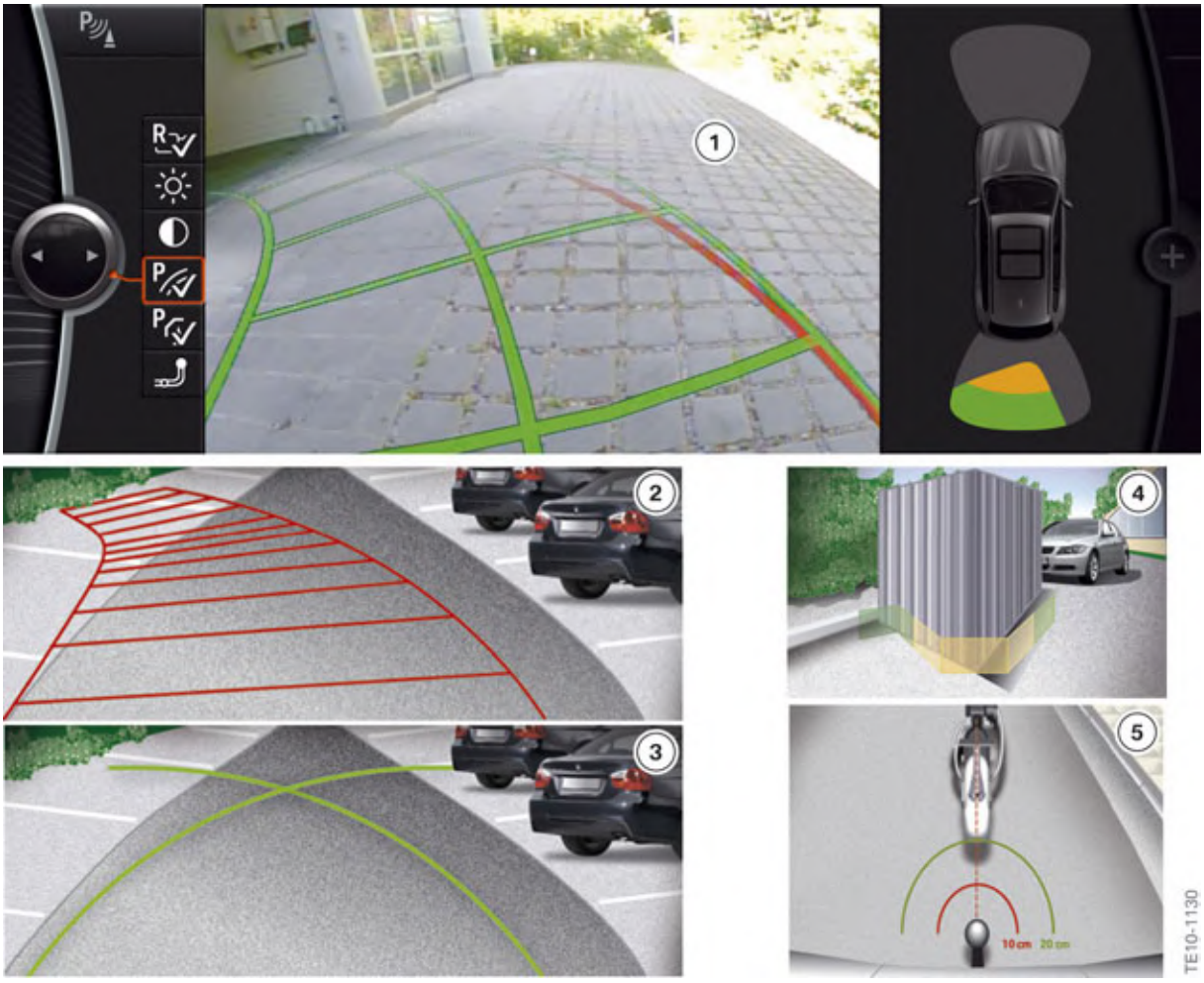

Example of how parking-aid line is displayed
Overview of the rear view camera assistance function

Index	Explanation
1	Depiction of a parking-aid line
2	Parking-aid line assistance function
3	Turning-circle line assistance function
4	Obstacle marking assistance function
5	Zoomed trailer tow hitch assistance function (not US)

The reversing camera is deactivated automatically as soon as the vehicle exceeds a speed of 20 km/h or travels forward by more than 20 m.

cardiagn.com

F25 Driver Assistance Systems

5. Top view

The area next to the vehicle can be displayed to the driver in the CID with the assistance of two exterior mirror cameras using the optional equipment Rear view camera with Top View (SA 3AH). This allows the driver to see areas around the vehicle that are not within his direct field of vision when parking and also when driving slowly.

The reversing camera (SA 3AG) and the Interior and exterior mirrors with automatic dimming function (SA 430) must be fitted in order to be able to fit the optional equipment Rear view camera with Top View.

F25 Exterior mirror camera

Index	Explanation
1	Exterior mirror camera

The Top View display can be activated via a button in the control box next to the gear selector switch or via the controller.

When the Top View is activated, both exterior mirror cameras are used in conjunction with the reversing camera.

The familiar turning circle and drive lines already projected by the reversing camera in the general view are also projected here for the driver.

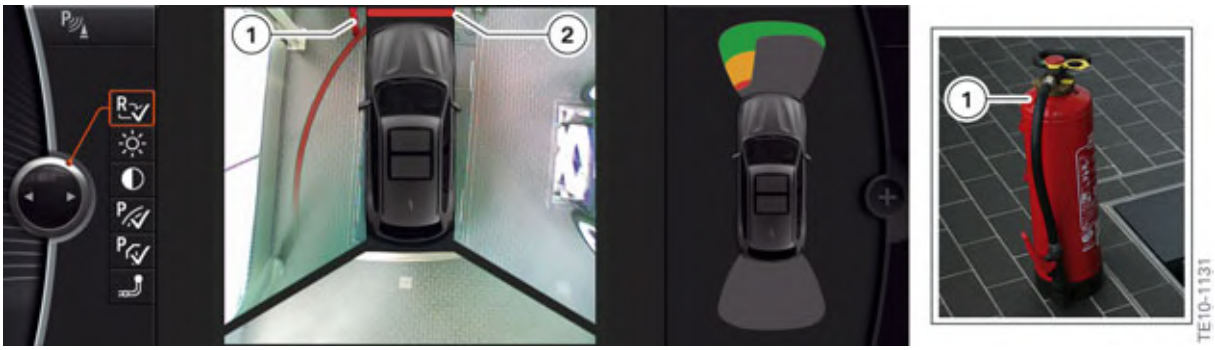

Top View

Index	Explanation
1	Obstruction
2	Warning about obstruction

cardiagn.com

F25 Driver Assistance Systems

5. Top view

When an obstruction is detected, the driver receives a visual and acoustic warning in the CID based on the PDC information.

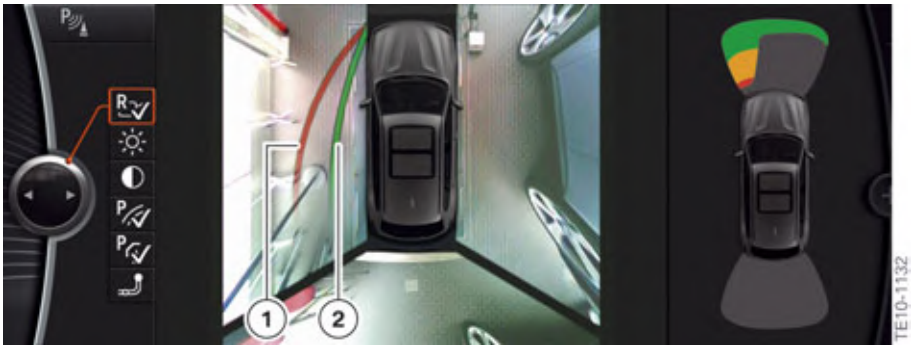

F25 General view of Top View showing drive line and turning circle line

Index	Explanation
1	Turning circle line
2	Lane line

The turning circle line shows the path of the smallest possible turning radius on a level roadway.

Only one turning circle line is displayed at the maximum steering-wheel angle.

The lane line depends on the current steering angle and is adapted continuously to the steering wheel movements.

The lane line helps the driver assess the space requirements when parking and manoeuvring on a level roadway.

⚠

Also check the traffic situation around the vehicle by looking directly. Otherwise there is a risk of accidents occurring, due to other road users or objects that are outside the image ranges of the camera for example.

cardiagn.com

F25 Driver Assistance Systems

6. Dynamic Cruise Control

6.1. Introduction

The cruise control with braking function has been used in many BMW models since the BMW 3-Series (E9x). It is also referred to as "Dynamic Cruise Control " (DCC). It relieves the burden on the driver on quiet roads by maintaining a constant speed regardless of the resistance to vehicle motion (gradient, payload). The driver is still responsible for driving the vehicle when using this support. The driver can override the DCC function at any time by braking or accelerating.

DCC also offers the driver the opportunity to adjust the set speed in small or large increments, which is then set and maintained by the system by controlling the powertrain and brakes. The brakes are also controlled during steep downhill driving if sufficient deceleration is not achieved by engine drag torque alone.

In the F25, the cruise control with braking function is implemented by the ICM control unit.

6.2. Control functions

6.2.1. Cruise control

The cruise control calculates a reference acceleration or deceleration based on the desired speed set by the driver and the actual speed.

6.2.2. Acceleration and deceleration

The driver can specify the desired speed or desired acceleration via the rocker switch in the multifunction steering wheel.

6.2.3. Cruise control when cornering

Another purpose of this function, also referred to as the "lateral acceleration controller", is to prevent the lateral acceleration from increasing above an acceptable level when cornering with the cruise control switched on. A lateral acceleration is calculated from the driving speed and yaw rate. This value is compared with a speed-dependent limit in order to achieve the following seemingly contradictory objectives:

- Disruptive and overly restrictive interventions are avoided if the driver himself would also prefer high lateral acceleration.
- Useful interventions and therefore also significant limitations in dynamics at high speeds. Most drivers find an overly high lateral acceleration in these situations unpleasant which is why a lower limit value is used.

The output variable for the cornering speed control system is also used as a setpoint value for the longitudinal acceleration.

cardiagn.com

6.2.4. Prioritization of partial setpoint values

The setpoint value with the highest priority according to the situation is selected from the longitudinal acceleration setpoint values for the control functions referred to above. In this instance, signals are filtered to prevent abrupt jumps when changing over the setpoint values.

6.2.5. Estimation of disturbance force

An acceleration or brake force must be calculated in order to be able to apply the prioritized longitudinal acceleration with the assistance of the actuators. Example: more driving power is required to achieve the same longitudinal acceleration during an uphill journey than on the flat. If the vehicle needs to decelerate when travelling up hill, less braking force is required compared to driving on the flat. In order to be able to correctly calculate the forces required, the precise value of the gradient and also the weight of the vehicle, the rolling resistance, the drag and other acceleration forces must be known. As a sensor system that can monitor all of these disturbances does not exist, an estimated value is calculated instead by comparing these two variables:

- actual movement variables of the vehicle
- anticipated movement variables of the vehicle as a result of the driving and braking forces currently acting on the vehicle.

The extent of the disturbance determined using this method is taken into account during subsequent processing of the longitudinal acceleration setpoint value by means of addition or subtraction.

6.2.6. Activation of the actuators

Driving power and/or braking forces must be introduced in order to produce the longitudinal acceleration calculated by the control functions and thus compensate for disturbances acting on the vehicle. A setpoint value for the power is normally forwarded in order to accelerate the vehicle. In exceptional cases during downhill driving on a steep gradient, it may be necessary to activate the brake to ensure the acceleration does not exceed a specific value.

If the vehicle needs to be decelerated, the extent of the contribution that may be required by the powertrain towards the deceleration, and therefore the braking effect of the engine and transmission, is initially determined. This value is output to the Digital Motor Electronics or Digital Diesel Electronics and electronic transmission control. If the drive train cannot achieve this value on its own, the additional amount that is required is forwarded to the Dynamic Stability Control.

The vehicle's brake lights are also switched on if the brakes are noticeably actuated in order to produce the desired deceleration.

cardiagn.com

F25 Driver Assistance Systems

7. Hill Descent Control

The purpose of HDC is to support the driver when driving downhill. When the driver activates this function by pushing the button, the vehicle travels on downhill gradients at a constant speed defined by the driver of between roughly 5 and 25 km/h. If the actual speed is not the same as the reference speed set by the driver, the HDC attempts to match the two speeds. The driver is supported by the DSC control functions during this process.

If the driver operates the HDC button, the ICM control unit checks this operation against the current states of the other assist systems.

cardiagn.com

F25 Driver Assistance Systems

8. Head-Up Display

The very name ”Head-Up” describes the principle benefit of this system. The Head-Up Display HUD projects a virtual image into the driver's field of view. Important information, e.g. from the cruise control or navigation system when the arrow display is active, is reflected on the windscreen and is therefore permanently in the driver's field of view.

The Head-Up Display (SA 610) in the F25 contains various functions aimed at enhancing road safety and ride comfort. That includes display of:

- Road speed
- Set speed regulation by the cruise control with braking function (DCC)
- Information from the navigation system
- Check Control messages.

Having the displays in the driver's direct field of view increases safety, as the driver always focusses on the traffic conditions.

Head-Up Display

For more information on the Head-Up Display, refer to the information bulletin entitled "Head-Up Display HUD" for the F01.

As there is no FAS strip in the F25, the Head-Up Display is operated via the controller and the operating menu. In the F25, the optional Head-Up Display can only be used in conjunction with a CID (SA 609, 663).

cardiagn.com

cardiagn.com

cardiagn.com

Bayerische Motorenwerke Aktiengesellschaft
Händlerqualifizierung und Training
Röntgenstraße 7
85716 Unterschleißheim, Germany