OPEL VIVARO

Owner's Manual

Wir leben Autos.

Contents

Introduction 2
In brief 6
Keys, doors and windows 20
Seats, restraints 34
Storage 57
Instruments and controls 62
Lighting 81
Climate control 86
Driving and operating 95
Vehicle care 117
Service and maintenance 148
Technical data 152
Customer information 167
Index 170

Introduction

Fuel	Designation			
Engine oil	Grade			
	Viscosity			
Tyre pressure		Tyre size	Front	Rear
	Summer tyres			
	Winter tyres			
Weights				
	Gross vehicle weight rating			
	- Kerb weight, basic model			
	- Additional weight			
	- Heavy accessories			
	= Loading			

Vehicle specific data

Please enter your vehicle's data on the previous page to keep it easily accessible. This information is available under the sections "Service and maintenance" and "Technical data" as well as on the identification plate.

Introduction

Your vehicle is a designed combination of advanced technology, safety, environmental friendliness and economy.

This Owner's Manual provides you with all the necessary information to enable you to drive your vehicle safely and efficiently.

Make sure your passengers are aware of the possible risk of accident and injury which may result from improper use of the vehicle.

You must always comply with the specific laws and regulations of the country that you are in. These laws may differ from the information in this Owner's Manual.

When this Owner's Manual refers to a workshop visit, we recommend your Opel Service Partner.

All Opel Service Partners provide first-class service at reasonable prices. Experienced mechanics trained by Opel work according to specific Opel instructions.

The customer literature pack should always be kept ready to hand in the vehicle.

Using this manual

- This manual describes all options and features available for this model. **Certain descriptions, including those for display and menu functions, may not apply to your vehicle due to model variant, country specifications, special equipment or accessories.**
- The "In brief" section will give you an initial overview.
- The table of contents at the beginning of this manual and within each section shows where the information is located.
- The index will enable you to search for specific information.
- This Owner's Manual depicts left-hand drive vehicles. Operation is similar for right-hand drive vehicles.
- The Owner's Manual uses the factory engine designations. The corresponding sales designations can be found in the section "Technical data".
- Directional data, e.g. left or right, or front or back, always relate to the direction of travel.
- The vehicle display screens may not support your specific language.
- Display messages and interior labelling are written in **bold** letters.

Danger, Warnings and Cautions

⚠ Danger
Text marked ⚠ **Danger** provides information on risk of fatal injury. Disregarding this information may endanger life.

⚠Warning
Text marked ⚠**Warning** provides information on risk of accident or injury. Disregarding this information may lead to injury.

Caution
Text marked **Caution** provides information on possible damage to the vehicle. Disregarding this information may lead to vehicle damage.

Symbols

Page references are indicated with ⇨.
⇨ means "see page".

We wish you many hours of pleasurable driving.

Adam Opel AG

In brief

Initial drive information

Vehicle unlocking

Unlocking with key

Turn the key in the driver's door lock. Open the doors by pulling the handles.

Unlocking with remote control

Press button 🔓 (or press and hold) to unlock vehicle.

Radio remote control ⇨ 20, Central locking system ⇨ 22, Load compartment ⇨ 27.

Seat adjustment

Seat positioning

Pull handle, slide seat, release handle.

Seat position ⇨ 35, Seat adjustment ⇨ 36.

⚠ Danger
Do not sit nearer than 25 cm from the steering wheel, to permit safe airbag deployment.

Seat backrests

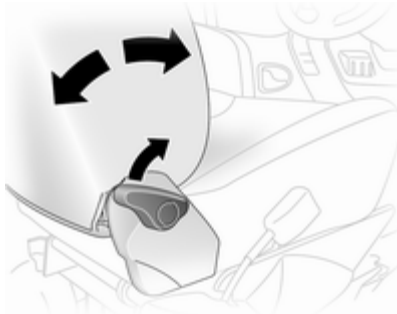

Pull lever, adjust inclination and release lever. Allow the seat to engage. Do not lean on backrest when adjusting.

Seat position ⇨ 35, Seat adjustment ⇨ 36.

Seat height

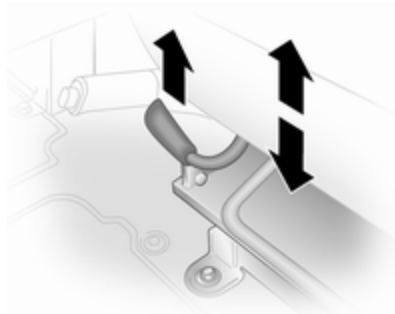

Lift lever and adjust body weight on seat to raise or lower it.

Seat position ⇨ 35, Seat adjustment ⇨ 36.

Head restraint adjustment

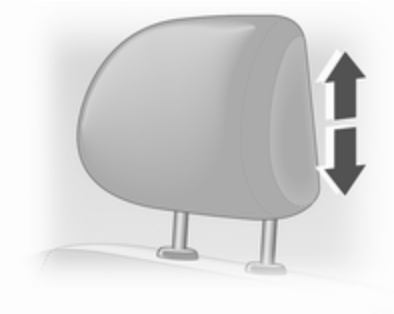

Raise or lower head restraint to the desired height.

Head restraints ⇨ 34.

Seat belt

Pull out the seat belt and engage in belt buckle. The seat belt must not be twisted and must fit close against the body. The backrest must not be tilted back too far (maximum approx. 25°).

To release belt, press red button on belt buckle.

Seat position ⇨ 35, Seat belts ⇨ 41, Airbag system ⇨ 44.

Mirror adjustment

Interior mirror

To reduce dazzle, adjust the lever on the underside of the mirror housing.

Interior mirror ⇨ 31.

Exterior mirrors

Manual adjustment

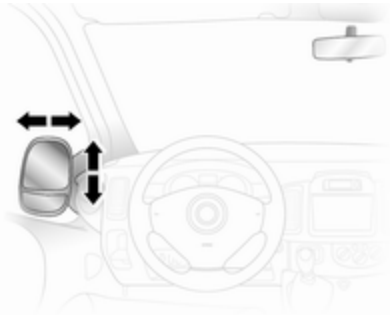

Swivel mirror in required direction.

Exterior mirrors ⇨ 30.

Electric adjustment

Select the relevant exterior mirror and adjust it.

Convex exterior mirrors ⇨ 30, Electric adjustment ⇨ 30, Folding exterior mirrors ⇨ 30, Heated exterior mirrors ⇨ 31.

Steering wheel adjustment

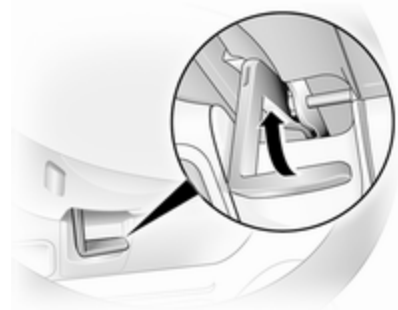

Unlock the lever, adjust the steering wheel, then engage the lever and ensure it is fully locked.

Do not adjust the steering wheel unless vehicle is stationary and the steering wheel lock has been released.

Airbag system ⇨ 44, Ignition positions ⇨ 96.

Instrument panel overview

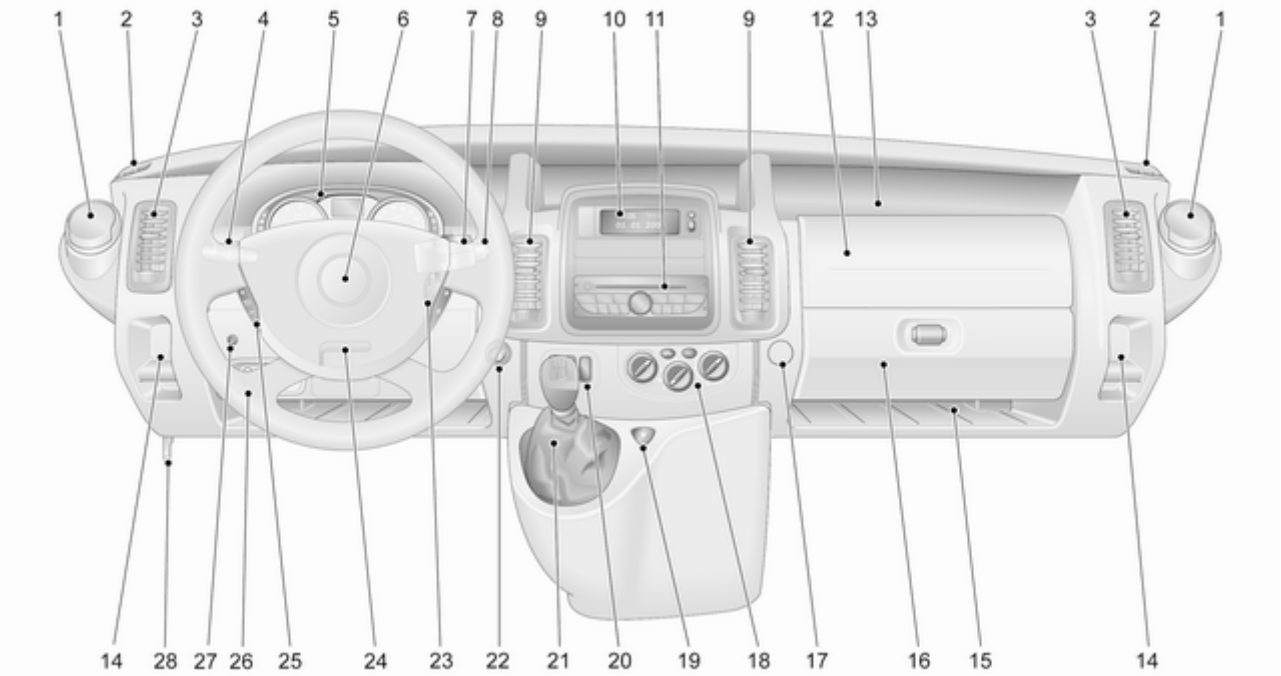

1 Ashtray 67
Cupholders 58
Fuse box 131
2 Fixed air vents 93
3 Side air vents 92
4 Light switch 81
Rear fog light 84
Front fog lights 83
Exit lighting 85
Turn and lane-change signals 83
Sidelights 81
Headlight flash, low beam and high beam 82
5 Instruments 67
Driver Information Centre 76
Transmission display 70
6 Horn 63
Driver airbag 47
7 Steering column controls 63
8 Windscreen wiper, windscreen washer system .. 63
Rear window wiper, rear window washer system 64
Trip computer 78
9 Centre air vents 92
10 Triple-Info-Display 76
11 Tachograph 92
12 Front passenger airbag 47
13 Storage tray 57
14 Coin tray 57
15 Storage tray 57
16 Glovebox 57
17 Utility hook 10
18 Climate control system 86
19 Hazard warning flashers 83
20 Central locking system 22
Heated exterior mirrors 31
Heated rear window 33
Manual transmission automated, Winter and Laden modes 101
Cruise control and speed limiter 106
21 Gear lever, Manual transmission 98
Manual transmission automated 99
22 Power outlet 66
Cigarette lighter 66
23 Ignition switch with steering wheel lock 96
24 Steering wheel adjustment . . . 62
25 Remote control on steering wheel 62
Cruise control 106
26 Ultrasonic parking assist 110
Headlight range adjustment 82
Electronic Stability Program 105
Traction Control system 104

27 Auxiliary heater 89
28 Bonnet release lever 118

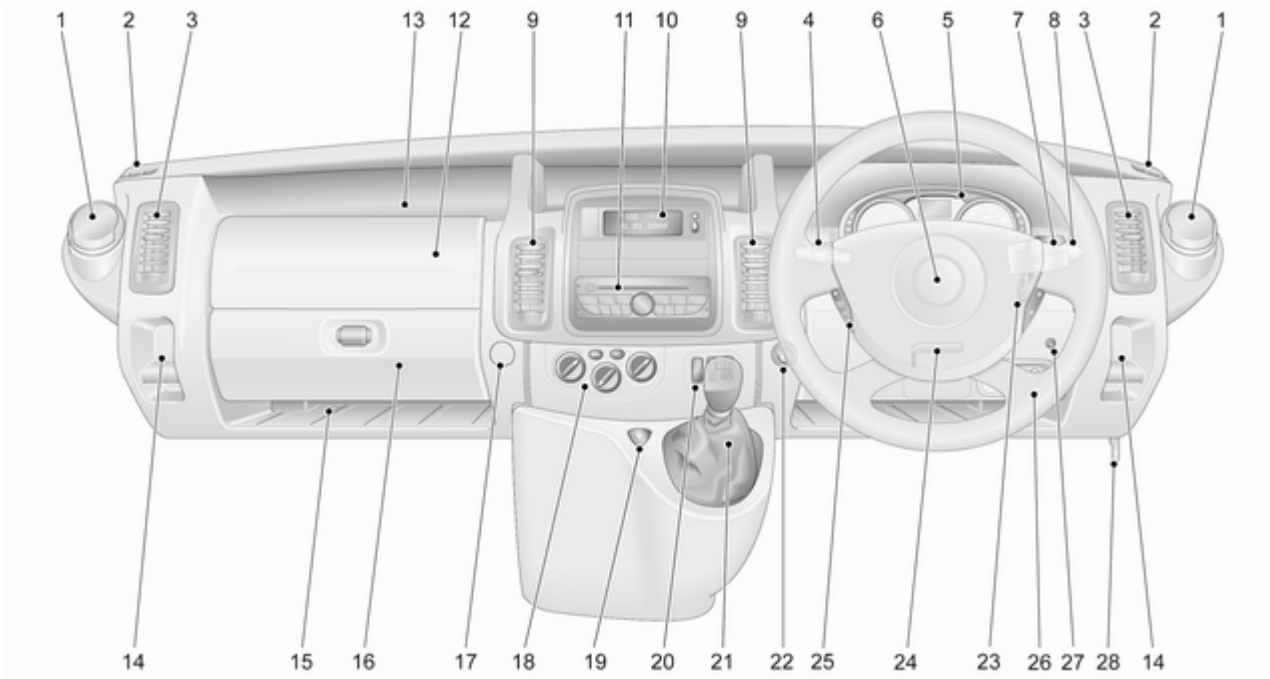
1
2
3
13
12
9
11
10
9
4
6
5
7
8
3
2
1
14
15
16
17
18
19
20
21
22
25
24
23
26
27
28
14

Exterior lighting

Turn light switch

0 = Off
☼ = Sidelights
≡D≡D = Headlights
≠D = Front fog lights
≠D≠ = Front and rear fog lights

Lighting ⇨ 81, Automatic light control ⇨ 81, Headlight warning device ⇨ 77.

Front and rear fog lights

Turn light switch

≠D = Front fog lights
≠D≠ = Front and rear fog lights

Headlight flash, high beam and low beam

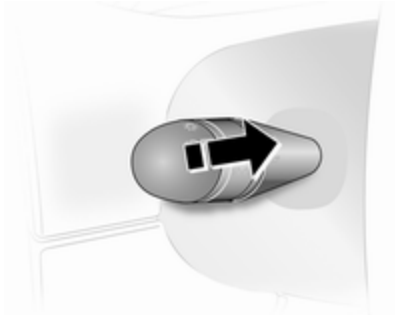

Pull lever.

High beam ⇨ 82, Headlight flash ⇨ 82.

Turn and lane-change signals

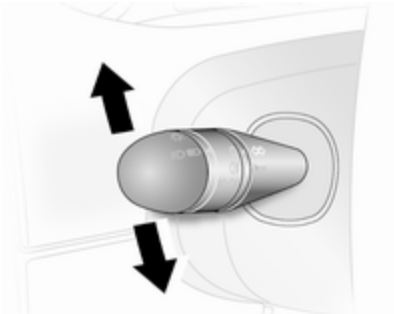

lever up = right turn signal
lever down = left turn signal

Turn and lane-change signals
⇨ 83.

Hazard warning flashers

Operated with the ⚠ button.

Hazard warning flashers ⇨ 83.

Horn

Press 📯.

Washer and wiper systems

Windscreen wiper

= timed interval wiping
1 = slow
2 = fast

Windscreen wiper ⇨ 63, Wiper blade replacement ⇨ 125.

Windscreen and headlight washer systems

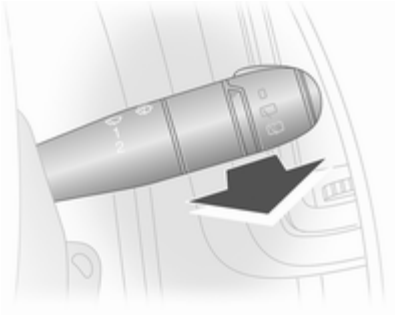

Pull lever.

short pull	=	wiper swipes once
long pull	=	wiper swipes for a few strokes and washer fluid is sprayed onto the windscreen

Windscreen and headlight washer system ⇨ 63, Wiper blade replacement ⇨ 125, Washer fluid ⇨ 122.

Rear window wiper and washer system

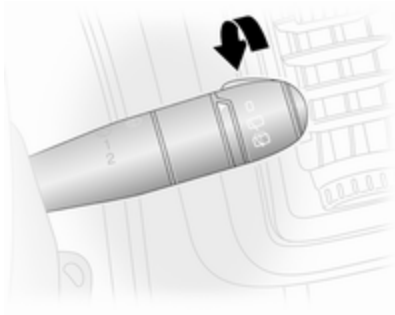

Turn lever.

0 = off
= wiper
= washer

Rear window wiper and washer system ⇨ 64, Wiper blade replacement ⇨ 125, Washer fluid ⇨ 122.

Climate control

Heated rear window, heated exterior mirrors

Heating is operated by pressing the button.

Heated exterior mirrors ⇨ 31,
Heated rear window ⇨ 33.

Demisting and defrosting the windows

Air distribution to .

Set temperature control to warmest level.

Set fan speed to highest level.

Cooling **AC** on.

Heated rear window on.

Climate control system ⇨ 86.

Transmission

Manual transmission

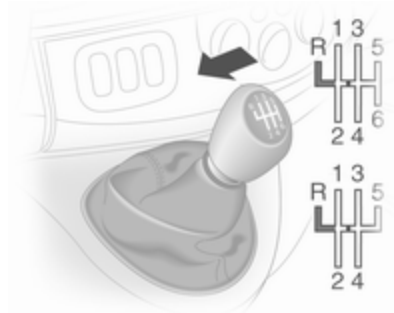

Reverse: with the vehicle stationary, wait 3 seconds after depressing clutch pedal and then pull up the collar on the selector lever and engage the gear.

If the gear does not engage, set the lever to neutral, release the clutch pedal and depress again; then repeat gear selection.

Manual transmission ⇨ 98.

Manual transmission automated

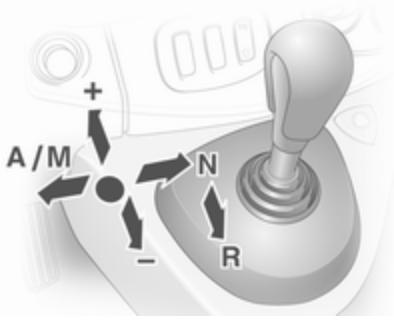

N	=	neutral
●	=	drive
+	=	higher gear
-	=	lower gear
A/M	=	switch between automatic and manual mode
R	=	reverse gear

Manual transmission automated ⇨ 99.

Starting off

Check before starting off

- Tyre pressure and condition ⇨ 134, ⇨ 166.
- Engine oil level and fluid levels ⇨ 119.
- All windows, mirrors, exterior lighting and number plates are free from dirt, snow and ice and are operational.
- Proper position of mirrors, seats and seat belts ⇨ 30, ⇨ 35, ⇨ 42.
- Brake function at low speed, particularly if the brakes are wet.

Starting the engine

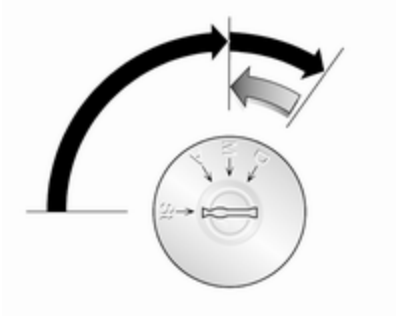

- Turn key to position **A**
- move the steering wheel slightly to release the steering wheel lock
- operate clutch and brake
- do not operate accelerator pedal
- diesel engines: turn the key to position **M** for preheating and wait until control indicator ➰ extinguishes in the Driver Information Centre.
- turn key to position **D** and release.

Starting the engine ⇨ 96.

Parking

- Always apply parking brake without pushing the release button. Apply as firmly as possible on a downhill or uphill slope. Depress foot brake at the same time to reduce operating force.
- Switch off the engine. Turn the ignition key to position **St** and remove it. Turn the steering wheel until the steering wheel lock is felt to engage.
- If the vehicle is on a level surface or uphill slope, engage first gear before switching off the ignition. On an uphill slope, turn the front wheels away from the kerb.

  If the vehicle is on a downhill slope, engage reverse gear before switching off the ignition. Turn the front wheels towards the kerb.
- Lock the vehicle and activate the anti-theft alarm system ⇨ 28 with button 🔒 on the remote control.
- Do not park the vehicle on an easily ignitable surface. The high temperature of the exhaust system could ignite the surface.
- Close the windows.
- The engine cooling fans may run after the engine has been switched off ⇨ 118.
- After running at high engine speeds or with high engine loads, operate the engine briefly at a low load or run in neutral for approx.
  30 seconds before switching off, in order to protect the turbocharger.

Keys, locks ⇨ 20.

Laying the vehicle up for a long period of time ⇨ 117.

Keys, doors and windows

Keys, locks 20
Doors 26
Vehicle security 27
Exterior mirrors 30
Interior mirrors 31
Windows 31

Keys, locks

Keys

Replacement keys

The key number is specified on the key or on a detachable tag.

The key number must be quoted when ordering replacement keys as it is a component of the immobiliser system.

Locks ⇨ 145.

Car Pass

The Car Pass contains security related vehicle data and should therefore be kept in a safe place.

When the vehicle is taken to a workshop, this vehicle data is needed in order to perform certain operations.

Radio remote control

Used to operate:

- Central locking system
- Anti-theft locking system
- Anti-theft alarm system

Depending on model, the vehicle may use a 2 button or 3 button remote control.

The remote control has a range of approx. 5 metres. It can be restricted by external influences. The hazard warning flashers confirm operation.

Handle with care, protect it from moisture and high temperatures and avoid unnecessary operation.

Fault

If the central locking system cannot be operated with the remote control, it may be due to the following:

- Range exceeded
- Battery voltage too low
- Frequent, repeated operation of the remote control while not in range, which will require reprogramming by a workshop
- Interference from higher-power radio waves from other sources

Unlocking ⇨ 22.

Remote control battery replacement

Replace the battery as soon as the range reduces.

Batteries do not belong in household waste. They must be disposed of at an appropriate recycling collection point.

2-button remote control

Open battery compartment by inserting a coin into the slot and twisting.

Replace the battery (battery type CR 2016), paying attention to the installation position.

Reattach both halves of the cover, ensuring they engage correctly.

3-button remote control

Remove screw and open battery compartment by inserting a coin into the slot and twisting.

Replace the battery (battery type CR 2016), paying attention to the installation position.

Reattach both halves of the cover, ensuring they engage correctly.

Replace screw and tighten.

Central locking system

Unlocks and locks the front doors, sliding side doors, load compartment and fuel filler flap.

With the 3-button remote control, the front doors and sliding side doors/ load compartment can be unlocked and locked separately.

For safety reasons, the vehicle cannot be locked if the key is in the ignition switch.

Unlocking the vehicle

Unlocking with key

Turn key in driver's door lock towards the front of the vehicle.

Unlocking with 2-button remote control

Depending on vehicle configuration:

- Press button 🔓: All doors and the load compartment are unlocked.
- Press button 🔓 once to unlock the front doors, and press 🔓 twice to unlock all doors and the load compartment.

Unlocking with 3-button remote control

Depending on vehicle configuration:

- Press button 🔓: Front doors are unlocked. Press and hold button 🔓: All doors and the load compartment are unlocked.

- Press button 🔓: Front doors and sliding side doors are unlocked. Press and hold button 🔓: All doors and the load compartment are unlocked.
- Press button 🔓: Driver's door only is unlocked. Press and hold 🔓: All doors and the load compartment are unlocked.

If no door is opened within approx. 30 seconds after the vehicle has been unlocked, the vehicle is re-locked automatically.

Locking the vehicle

Close doors, load compartment and fuel filler flap. If the doors are not closed properly, the central locking system will not work.

Locking with key

Turn key in driver's door lock towards the rear of the vehicle.

Locking with 2-button remote control

Depending on vehicle configuration:

- Press button 🔒 briefly: All doors and the load compartment are locked.
- Press button 🔒 once to lock the front doors, and press 🔒 twice to lock all doors and the load compartment.

Locking with 3-button remote control

Press button 🔒 briefly: All doors and the load compartment are locked.

Note

Where fitted, alarm monitoring of the passenger compartment ⇨ 28 is switched off by pressing and holding button 🔒 (which is confirmed by an audible signal).

If this was done unintentionally, unlock the doors again and press button 🔒 briefly to lock the vehicle.

Load compartment

Locking and unlocking load compartment with 2-button remote control

Depending on vehicle configuration:

- Press button 🔒 or 🔓 once: Load compartment is locked or unlocked.
- Press button 🔒 or 🔓 twice: Load compartment is locked or unlocked.

Locking and unlocking load compartment with 3-button remote control

Depending on vehicle configuration:

- Press button 🚗: Load compartment is locked or unlocked.
- Press button 🚗: Load compartment and sliding side doors are locked or unlocked.

Central locking switch

Locks or unlocks the doors, load compartment and fuel filler flap from the passenger compartment.

Press switch:

🔒 = lock
🔓 = unlock

Slam door locks

Certain models feature load compartment locks which are isolated for added security.

With slam door locks, while the doors can be locked and unlocked using the remote control, the load compartment must be manually opened by turning the key in the lock.

Automatic locking

Automatic locking after driving off

This security feature can be configured to automatically lock the doors, load compartment and fuel filler flap as soon as the vehicle is driven.

Activation

With the ignition switched on, press and hold on the central locking switch for approx. 5 seconds. An audible signal confirms activation.

Deactivation

With the ignition switched on, press and hold on the central locking switch for approx. 5 seconds. An audible signal confirms deactivation.

Child locks

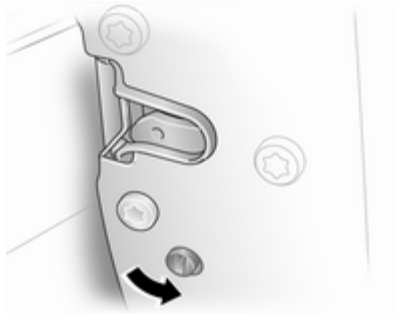

⚠ Warning

Use the child locks whenever children are occupying the rear seats.

The child safety lock for the sliding door is located on its rearward facing edge.

Using a key or suitable screwdriver, turn the child lock in the rear door to the horizontal position. The door cannot be opened from the inside. For deactivation, turn the child lock to the vertical position.

Doors

Sliding door

Ensure the side door is fully closed and secure before driving the vehicle.

The door can be locked from inside the vehicle with the interior lock switch.

Rear doors

To open the left hand rear door pull the outside handle. The door is opened from inside the vehicle by pulling the interior handle.

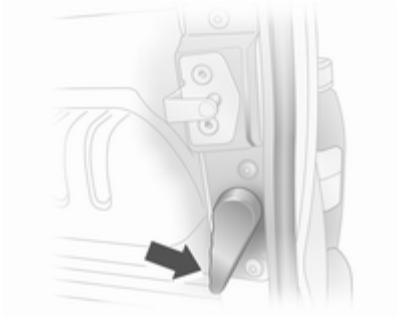

The right hand rear door is released using the lever.

⚠ Warning

The rear lights may be obscured if the rear doors are open and the vehicle is parked on the roadside.

Make other road users aware of the vehicle, by using a warning triangle or other equipment specified in the road traffic regulations.

The doors are retained in the 90º position by locking stays. To open the doors to 180º or further, pull the door release handles and swing open to the desired position.

⚠ Warning

Ensure extended opening doors are secured when fully opened.

Opened doors may slam closed due to the force of the wind!

Always close the right hand door before the left hand door.

Load compartment

Tailgate

Opening

After unlocking with the remote control, press tailgate button and lift tailgate to the fully open position.

The tailgate can be also opened from inside the vehicle by pushing down the tailgate interior release.

Note
In very cold climates, the opening assistance provided by the tailgate hydraulic struts may be reduced.

Central locking system ⇨ 22.

Closing

Close tailgate using the interior strap. Ensure tailgate is fully closed.

Central locking system ⇨ 22.

General hints for operating tailgate

⚠ Danger

Do not drive with the tailgate open or ajar, e.g. when transporting bulky objects, since toxic exhaust gases, which can not be seen or smelled, could enter the vehicle. This can cause unconsciousness and even death.

Caution

Ensure there is adequate clearance both above (at least 2.15 m) and behind when opening tailgate.

Vehicle security

Anti-theft locking system

⚠ Warning

Do not use the system if there are people in the vehicle! The doors cannot be unlocked from the inside.

The system deadlocks all doors and the tailgate.

All doors and the tailgate must be closed or the system cannot be activated.

Note
The anti-theft locking system cannot be activated when the hazard warning lights or sidelights are switched on.

Activation and deactivation are not possible with the central locking switch.

Activation

Press button twice.

- or -

Turn key in driver's door lock towards rear of vehicle twice.

Deactivation

Unlock the doors with the key or button on the remote control.

Anti-theft alarm system

The anti-theft alarm system is operated in conjunction with the central locking system.

It monitors:

- Doors, tailgate, bonnet
- Passenger compartment,
- Load compartment,
- Vehicle inclination, e.g. if it is raised
- Ignition
- Interruption of alarm siren power supply.

Activation

All doors and the bonnet must be closed.

Press button to activate anti-theft alarm system. Hazard warning lights flash twice to confirm activation.

If the hazard warning lights do not flash upon activation, a door or the bonnet is not fully closed.

Deactivation

Unlocking the vehicle or switching on the ignition deactivates the anti-theft alarm system. Hazard warning lights flash once to confirm deactivation.

Note

If the alarm has been triggered, unlocking the vehicle with the key will not stop the alarm siren. To stop the siren, switch on the ignition. The hazard warning lights will not flash upon deactivation if the alarm has been triggered.

Activation without monitoring of passenger compartment

Disable monitoring of the passenger compartment e.g. when animals are being left in the vehicle, or if the auxiliary heater ⇨ 89 has been set for a timed or remote controlled start.

Press and hold button 🔒; an audible signal will sound as confirmation.

The status will remain until the doors are unlocked.

Alarm

When triggered, the alarm sounds via a separate battery-backed power sounder, and the hazard warning lights flash simultaneously. The number and duration of alarm signals are stipulated by legislation.

If the vehicle battery is disconnected or its power supply is interrupted, the alarm siren will be triggered. First deactivate the anti-theft alarm system if the vehicle battery must be disconnected.

To silence the alarm siren (if triggered) and therefore deactivate the anti-theft alarm system, reconnect vehicle battery and unlock vehicle with remote control button 🔓 (or switch on the ignition).

Immobiliser

The system is part of the ignition switch and checks whether the vehicle is allowed to be started with the key being used.

The immobiliser is activated automatically after the key has been removed from the ignition switch and also if the key is left in the ignition switch when the engine is turned off.

If the engine cannot be started, switch off the ignition and remove key, wait approx. 2 seconds and then repeat the start attempt. If start attempt is unsuccessful, attempt to start the engine using the spare key and seek the assistance of a workshop.

Note

The immobiliser does not lock the doors. You should always lock the vehicle after leaving it and switch on the anti-theft alarm system ⇨ 22, ⇨ 28.

Exterior mirrors

Convex shape

The convex exterior mirror contains an aspherical area and reduces blind spots. The shape of the mirror makes objects appear smaller, which will affect the ability to estimate distances.

Manual adjustment

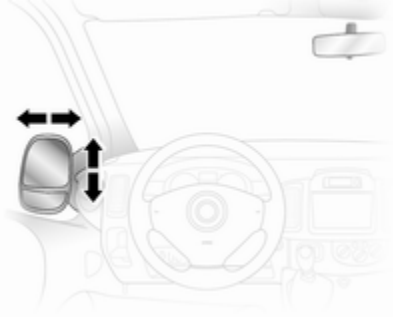

Adjust mirrors by swivelling in required direction.

The lower mirrors are not adjustable.

Electric adjustment

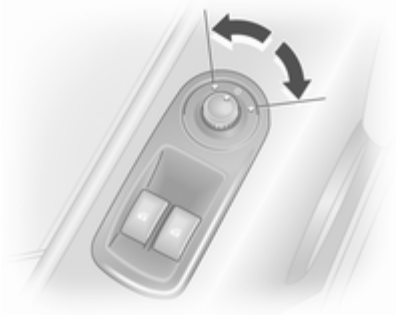

Select the relevant exterior mirror by switching the control to the left or right, then swivel the control to adjust the mirror.

No mirror is selected when the control is in the centre position.

The lower mirrors are not adjustable.

Folding mirrors

For pedestrian safety, the exterior mirrors will swing out of their normal mounting position if they are struck with sufficient force. Reposition the mirror by applying slight pressure to the mirror housing.

Heated mirrors

Operated by pressing the button.

Heating functions with the engine running. It is switched off automatically after a short time.

Climate control system ⇨ 86.

Interior mirrors

Manual anti-dazzle

To reduce dazzle, adjust the lever on the underside of the mirror housing.

Windows

Windscreen

Heat-reflecting windscreen

The heat-reflecting windscreen has a coating which reflects solar radiation. Also data signals, e.g. from toll stations, might be reflected.

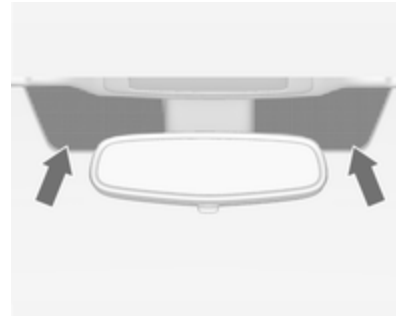

The marked areas on the windscreen are not covered with the coating. Devices for electronic data recording and fee payment must be attached in these areas. Otherwise data recording malfunctions may occur.

Windscreen stickers

Do not attach stickers such as toll road stickers or similar on the windscreen in the area of the interior mirror.

Manual windows

The door windows can be opened or closed with the window winders.

Power windows

⚠Warning

Take care when operating the power windows. Risk of injury, particularly to children.

Keep a close watch on the windows when closing them. Ensure that nothing becomes trapped in them as they move.

Power windows can be operated with the ignition on.

Operate the switch for the respective window by pushing to open or pulling to close.

For vehicles with automatic feature pull or press the switch again to stop window movement.

In the event of closing difficulties due to frost or the like, operate the switch several times to close the window in stages.

Rear windows

Sliding side windows

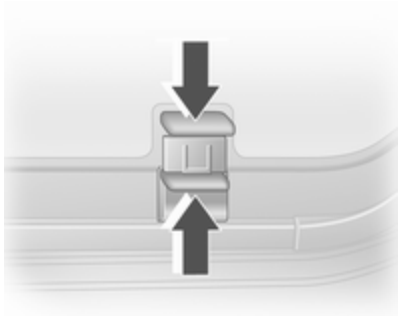

To open, pull up catch and slide open.

To close, pull up catch and slide window until catch engages.

Note
During window opening or closing, keep the catch raised to allow the glass sufficient clearance.

Heated rear window

Operated by pressing the button.

Heating functions with the engine running and is switched off automatically after a short time.

Climate control system ⇨ 86.

Sun visors

The sun visors can be folded down or swivelled to the side to prevent dazzling.

If the sun visors have integral mirrors, the mirror covers should be closed when driving.

Seats, restraints

Head restraints 34
Front seats 35
Rear seats 38
Seat belts 41
Airbag system 44
Child restraints 50

Head restraints

Position

⚠ Warning

Only drive with the head restraint set to the proper position.

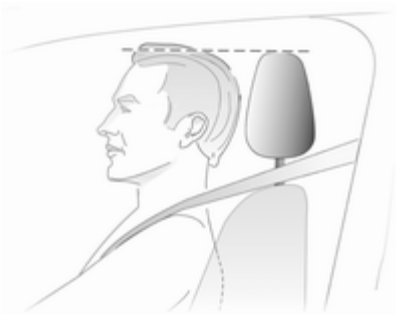

The upper edge of the head restraint should be at upper head level. If this is not possible for extremely tall people, set to highest position, and set to lowest position for small people.

Adjustment

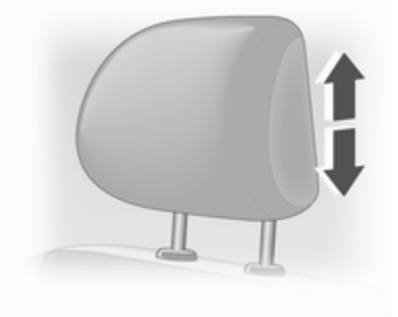

Pull the head restraint upwards or push the head restraint downwards.

Note
Approved accessories may only be attached to the front passenger seat head restraint if the seat is not in use.

Head restraint removal

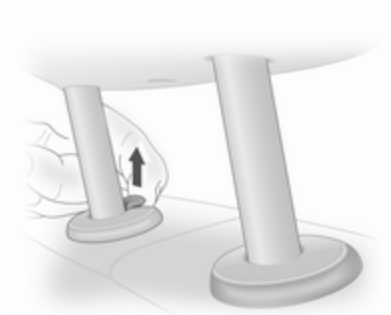

To remove the head restraints, pull lock tab and pull the restraint upwards.

Stow head restraints securely in load compartment. Do not drive with head restraints removed if the seat is occupied.

Front seats

Seat position

⚠ Warning

Only drive with the seat correctly adjusted.

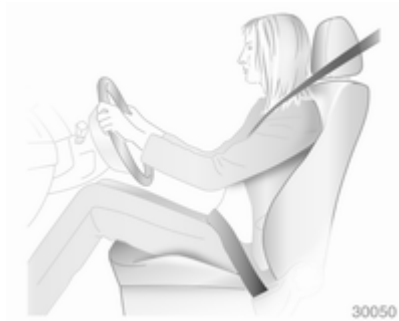

- Sit with buttocks as far back against the backrest as possible. Adjust the distance between the seat and the pedals so that legs are slightly angled when pressing the pedals. Slide the front passenger seat as far back as possible.
- Sit with shoulders as far back against the backrest as possible. Set the backrest rake so that it is possible to reach the steering wheel with arms slightly bent. Maintain contact between shoulders and the backrest when turning the steering wheel. Do not angle the backrest too far back. We recommend a maximum rake of approx. 25°.
- Adjust the steering wheel ⇨ 62.
- Set seat height high enough to have a clear field of vision on all sides and of all display instruments. There should be at least one hand of clearance between head and the roof frame. Thighs should rest lightly on the seat without pressing into it.
- Adjust the head restraint ⇨ 34.
- Adjust the height of the seat belt ⇨ 42.
- Adjust the lumbar support so that it supports the natural shape of the spine ⇨ 36.

Seat adjustment

⚠ Danger

Do not sit nearer than 25 cm from the steering wheel, to permit safe airbag deployment.

⚠ Warning

Never adjust seats while driving as they could move uncontrollably.

Seat positioning

Pull handle, slide seat, release handle.

Seat backrests

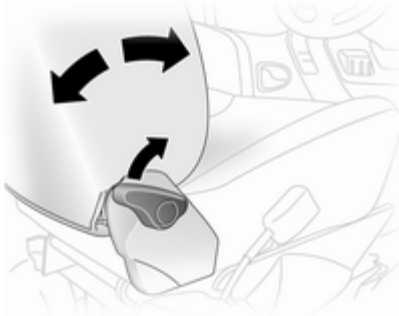

Pull lever, adjust inclination and release lever. Allow the backrest to engage audibly.

Do not lean on seat when adjusting.

Seat height

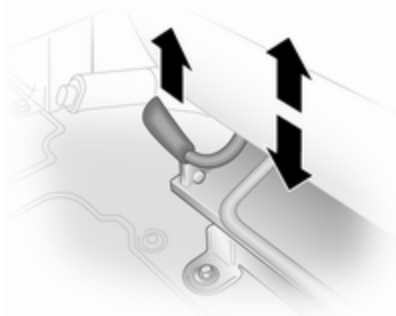

Lift lever and adjust body weight on seat to adjust height.

Lumbar support

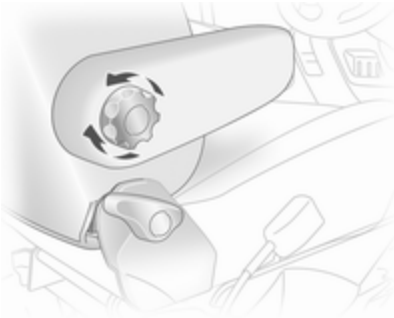

Adjust lumbar support using handwheel to suit personal requirements.

Rotate handwheel to increase and decrease support.

Armrest

Adjust armrest support to suit personal requirements.

- Raise armrest in increments to desired height.
- To reposition, fully raise armrest before lowering.

Heating

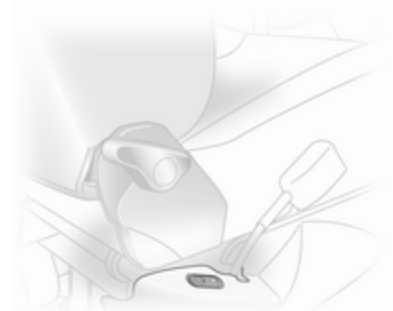

Press the button for the respective seat. Press the button again to switch off.

Seat heating is thermostatically controlled and switches off automatically when seat temperature is sufficient.

Control indicator in the button illuminates when the system is on, not just when heating is active.

Prolonged use of the highest setting for people with sensitive skin is not recommended.

Seat heating is operational when the engine is running.

Rear seats

Second row seats

When folding or removing the rear seat ensure the armrests are folded away in their most upright position.

Also remove the lower seat trim side pocket by disconnecting it from the fixings.

To enable long items to be stored under the seats the centre seat trim cover can be unclipped.

Rear seat access

To facilitate access to the rear seats, fold the seat backrest forwards. If necessary release the two-latch seat belt from its buckles.

⚠Warning

Ensure that the backrest returns to its correct position and the seat belt buckles engage securely.

Fitting seat belt ⇨ 42.

Folding seats

On some variants, the cargo area can be increased by folding up the rear seats.

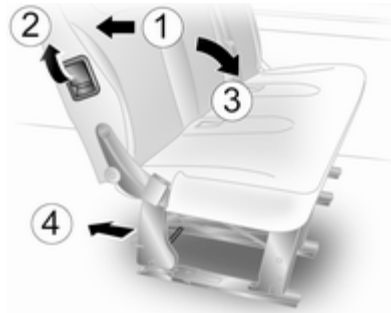

Remove the head restraints ⇨ 34.

Push the seat backrest rearwards **1**, then pull the side handle to release **2**.

Fold the backrest forward onto the seat base **3**, if necessary release the two-latch seat belts from their buckles.

Release both locking bars at the rear base of the seat by pulling rearwards **4**.

Lift and fold the seat assembly, until the seat frame rests in place.

⚠Warning

When folding the seat use caution - beware of moving parts. Ensure the seat is secure when completely folded.

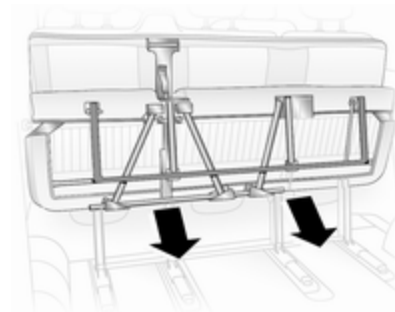

To return the folding seat to the upright position, support the seat assembly and release the bar by pulling the bar directly towards you.

Gradually lower the seat assembly, allowing the rear support legs to fold down. Lower the seat completely, ensuring the rear support legs are located, and latched.

Raise the backrest, reinstall head restraints and connect the seat belts.

Removable rear seats

On some variants, the cargo area can be increased by removing the rear seats.

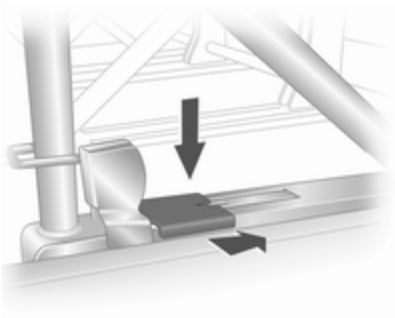

Release the seats by pressing down and sliding forward the locking catch located on the left and right hand seat mountings.

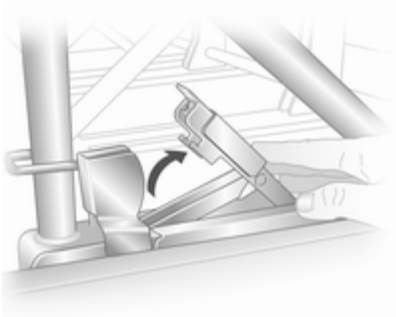

With both catches raised, push the seat unit towards the rear and release them from the floor anchor points. The seat can then be lifted out.

The seats must be removed through the sliding door only.

⚠ Warning

Removable seats are heavy! Do not attempt to remove without assistance.

When installing the seats, ensure that the seats are properly located on the anchor points and that the locking catches are fully engaged.

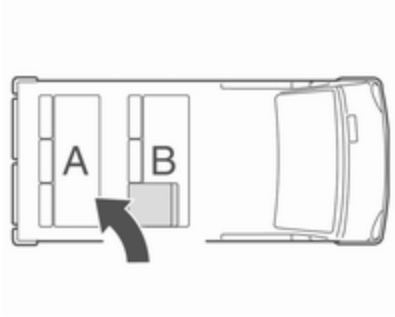

When re-installing seats always ensure that the row with the folding access seat **B** is positioned correctly in front of the fixed seat row **A**.

Seat belts

The seat belts are locked during heavy acceleration or deceleration of the vehicle holding the occupants in the sitting position. Therefore, the risk of injury is considerably reduced.

⚠Warning

Fasten seat belt before each trip.

In the event of an accident, people not wearing seat belts endanger their fellow occupants and themselves.

Seat belts are only designed for use by one person at a time. Child restraint system ⇨ 50.

Periodically check all parts of the belt system for damage and proper functionality.

Have damaged components replaced. After an accident, have the belts and triggered belt tensioners replaced by a workshop.

Note
Make sure that the belts are not damaged by shoes or sharp-edged objects or trapped. Prevent dirt from getting into the belt retractors.

Seat belt reminder ⇨ 72.

Belt force limiters

On the front seats, stress on the body is reduced by the gradual release of the belt during a collision.

Belt tensioners

In the event of a head-on or rear-end collision of a certain severity, the front seat belts are tightened.

⚠Warning

Incorrect handling (e.g. removal or fitting of belts) can trigger the belt tensioners with risk of injury.

Deployment of the belt tensioners is indicated by continuous illumination of control indicator ⇨ 72.

Triggered belt tensioners must be replaced by a workshop. Belt tensioners can only be triggered once.

Note
Do not affix or install accessories or other objects that may interfere with the operation of the belt tensioners. Do not make any modifications to belt tensioner components as this will invalidate the vehicle type approval.

Three-point seat belt

Fitting

Withdraw the belt from the retractor, guide it untwisted across the body and insert the latch plate into the buckle. Tighten the lap belt regularly whilst driving by pulling the shoulder belt.

Seat belt reminder ⇨ 72.

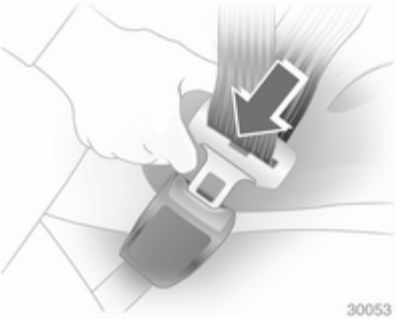

Loose or bulky clothing prevents the belt from fitting snugly. Do not place objects such as handbags or mobile phones between the belt and your body.

⚠ Warning

The belt must not rest against hard or fragile objects in the pockets of your clothing.

Height adjustment

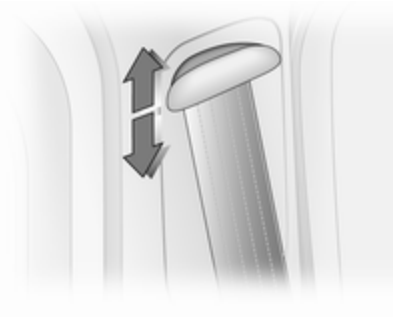

Slide adjuster up or down to desired position:

- Press button on adjuster then slide downwards.
- Pull up adjuster without pressing button.

Adjust the height so that the belt lies across the shoulder. It must not lie across the throat or upper arm.

Do not adjust while driving.

Removing

To release belt, press red button on belt buckle.

Seat belts on the rear seats

Two-latch belt

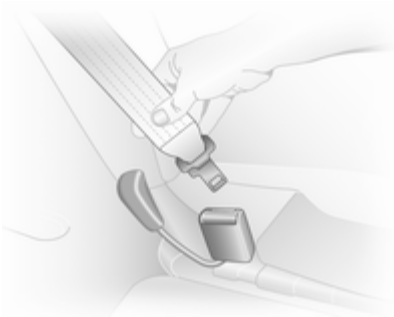

Before fitting the belt, first insert lower latch plate into the buckle on the outside of the seat.

The belt can now be used in the same way as a standard seat belt.

⚠ Warning

The seat belt will not be effective in the event of an accident if the lower latch is not correctly fitted.

When releasing the seat belt, ensure that the central buckle is always released before the buckle on the side of the seat.

Always remove the lower latch plate from the outside buckle before removing seats from the vehicle or to facilitate access to the rear seats.

Second row seats ⇨ 38.

Using the seat belt while pregnant

⚠Warning

The lap belt must be positioned as low as possible across the pelvis to prevent pressure on the abdomen.

Airbag system

The airbag system consists of a number of individual systems depending on the scope of equipment.

When triggered the airbags inflate within milliseconds. They also deflate so quickly that it is often unnoticeable during the collision.

⚠Warning

If handled improperly the airbag systems can be triggered in an explosive manner.

Note
The airbag systems and belt tensioner control electronics are located in the centre console area. Do not put any magnetic objects in this area.

Do not stick anything on the airbag covers and do not cover them with other materials.

Each airbag is triggered only once. Have deployed airbags replaced by a workshop.

Do not make any modifications to the airbag system as this will invalidate the vehicle type approval.

In the event of airbag deployment have the steering wheel, the instrument panel, all panelling parts, the door seals, the handles and the seats removed by a workshop.

When the airbags inflate escaping hot gases may cause burns.

Control indicator for airbag systems ⇨ 72.

Child restraint systems on front passenger seat with airbag systems

Warning according to ECE R94.02:

EN: NEVER use a rear-facing child restraint system on a seat protected by an ACTIVE AIRBAG in front of it, DEATH or SERIOUS INJURY to the CHILD can occur.

DE: Nach hinten gerichtete Kindersitze NIEMALS auf einem Sitz verwenden, der durch einen davor befindlichen AKTIVEN AIRBAG geschützt ist, da dies den TOD oder SCHWERE VERLETZUNGEN DES KINDES zur Folge haben kann.

FR: NE JAMAIS utiliser un siège d'enfant orienté vers l'arrière sur un siège protégé par un COUSSIN GONFLABLE ACTIF placé devant lui, sous peine d'infliger des BLESSURES GRAVES, voire MORTELLES à l'ENFANT.

ES: NUNCA utilice un sistema de retención infantil orientado hacia atrás en un asiento protegido por un AIRBAG FRONTAL ACTIVO. Peligro de MUERTE o LESIONES GRAVES para el NIÑO.

RU: ЗАПРЕЩАЕТСЯ устанавливать детское удерживающее устройство лицом назад на сиденье автомобиля, оборудованном фронтальной подушкой безопасности, если ПОДУШКА НЕ ОТКЛЮЧЕНА! Это может привести к СМЕРТИ или СЕРЬЕЗНЫМ ТРАВМАМ РЕБЕНКА.

NL: Gebruik NOOIT een achterwaarts gericht kinderzitje op een stoel met een ACTIEVE AIRBAG ervoor, om DODELIJK of ERNSTIG LETSEL van het KIND te voorkomen.

DA: Brug ALDRIG en bagudvendt autostol på et forsæde med AKTIV AIRBAG, BARNET kan komme i LIVSFARE eller komme ALVORLIGT TIL SKADE.

SV: Använd ALDRIG en bakåtvänd barnstol på ett säte som skyddas med en framförvarande AKTIV AIRBAG. DÖDSFALL eller ALLVARLIGA SKADOR kan drabba BARNET.

FI: ÄLÄ KOSKAAN sijoita taaksepäin suunnattua lasten turvaistuinta istuimelle, jonka edessä on AKTIIVINEN TURVATYYNY, LAPSI VOI KUOLLA tai VAMMAUTUA VAKAVASTI.

NO: Bakovervendt barnesikringsutstyr må ALDRI brukes på et sete med AKTIV KOLLISJONSPUTE foran, da det kan føre til at BARNET utsettes for LIVSFARE og fare for ALVORLIGE SKADER.

PT: NUNCA use um sistema de retenção para crianças voltado para trás num banco protegido com um AIRBAG ACTIVO na frente do

mesmo, poderá ocorrer a PERDA DE VIDA ou FERIMENTOS GRAVES na CRIANÇA.

IT: Non usare mai un sistema di sicurezza per bambini rivolto all'indietro su un sedile protetto da AIRBAG ATTIVO di fronte ad esso: pericolo di MORTE o LESIONI GRAVI per il BAMBINO!

EL: ΠΟΤΕ μη χρησιμοποιείτε παιδικό κάθισμα ασφαλείας με φορά προς τα πίσω σε κάθισμα που προστατεύεται από μετωπικό ΕΝΕΡΓΟ ΑΕΡΟΣΑΚΟ, διότι το παιδί μπορεί να υποστεί ΘΑΝΑΣΙΜΟ ή ΣΟΒΑΡΟ ΤΡΑΥΜΑΤΙΣΜΟ.

PL: NIE WOLNO montować fotelika dziecięcego zwróconego tyłem do kierunku jazdy na fotelu, przed którym znajduje się WŁĄCZONA PODUSZKA POWIETRZNA. Niezastosowanie się do tego zalecenia może być przyczyną ŚMIERCI lub POWAŻNYCH OBRAŻEŃ u DZIECKA.

TR: Arkaya bakan bir çocuk emniyet sistemini KESİNLİKLE önünde bir AKTİF HAVA YASTIĞI ile korunmakta olan bir koltukta kullanmayınız. ÇOCUK ÖLEBİLİR veya AĞIR ŞEKİLDE YARALANABİLİR.

UK: НІКОЛИ не використовуйте систему безпеки для дітей, що встановлюється обличчям назад, на сидінні з УВІМКНЕНОЮ ПОДУШКОЮ БЕЗПЕКИ, інакше це може призвести до СМЕРТІ чи СЕРЙОЗНОГО ТРАВМУВАННЯ ДИТИНИ.

HU: SOHA ne használjon hátrafelé néző biztonsági gyerekülést előlről AKTÍV LÉGZSÁKKAL védett ülésen, mert a GYERMEK HALÁLÁT vagy KOMOLY SÉRÜLÉSÉT okozhatja.

HR: NIKADA nemojte koristiti sustav zadržavanja za djecu okrenut prema natrag na sjedalu s AKTIVNIM ZRAČNIM JASTUKOM ispred njega, to bi moglo dovesti do SMRTI ili OZBILJNJIH OZLJEDA za DIJETE.

SL: NIKOLI ne nameščajte otroškega varnostnega sedeža, obrnjenega v nasprotni smeri vožnje, na sedež z AKTIVNO ČELNO ZRAČNO BLAZINO, saj pri tem obstaja nevarnost RESNIH ali SMRTNIH POŠKODB za OTROKA.

SR: NIKADA ne koristiti bezbednosni sistem za decu u kome su deca okrenuta unazad na sedištu sa AKTIVNIM VAZDUŠNIM JASTUKOM ispred sedišta zato što DETE može da NASTRADA ili da se TEŠKO POVREDI.

MK: НИКОГАШ не користете детско седиште свртено наназад на седиште заштитено со АКТИВНО ВОЗДУШНО ПЕРНИЧЕ пред него, затоа што детето може ДА ЗАГИНЕ или да биде ТЕШКО ПОВРЕДЕНО.

BG: НИКОГА не използвайте детска седалка, гледаща назад, върху седалка, която е защитена чрез АКТИВНА ВЪЗДУШНА ВЪЗГЛАВНИЦА пред нея - може да се стигне до СМЪРТ или СЕРИОЗНО НАРАНЯВАНЕ на ДЕТЕТО.

RO: Nu utilizați NICIODATĂ un scaun pentru copil îndreptat spre partea din spate a mașinii pe un scaun protejat de un AIRBAG ACTIV în fața sa;

acest lucru poate duce la DECESUL sau VĂTĂMAREA GRAVĂ a COPILULUI.

CS: NIKDY nepoužívejte dětský zádržný systém instalovaný proti směru jízdy na sedadle, které je chráněno před sedadlem AKTIVNÍM AIRBAGEM. Mohlo by dojít k VÁŽNÉMU PORANĚNÍ nebo ÚMRTÍ DÍTĚTE.

SK: NIKDY nepoužívajte detskú sedačku otočenú vzad na sedadle chránenom AKTÍVNYM AIRBAGOM, pretože môže dôjsť k SMRTI alebo VÁŽNYM ZRANENIAM DIEŤAŤA.

LT: JOKIU BŪDU nemontuokite atgal atgręžtos vaiko tvirtinimo sistemos sėdynėje, prieš kurią įrengta AKTYVI ORO PAGALVĖ, nes VAIKAS GALI ŽŪTI arba RIMTAI SUSIŽALOTI.

LV: NEKĀDĀ GADĪJUMĀ neizmantojiet uz aizmuguri vērstu bērnu sēdeklīti sēdvietā, kas tiek aizsargāta ar tās priekšā uzstādītu AKTĪVU DROŠĪBAS SPILVENU, jo pretējā gadījumā BĒRNS var gūt SMAGAS TRAUMAS vai IET BOJĀ.

ET: ÄRGE kasutage tahapoole suunatud lapseturvaistet istmel, mille ees on AKTIIVSE TURVAPADJAGA kaitstud iste, sest see võib põhjustada LAPSE SURMA või TÕSISE VIGASTUSE.

Beyond the warning required by ECE R94.02, for safety reasons never use a forward-facing child restraint system on the front passenger seat with active front airbag.

⚠ Danger

Do not use a child restraint system on the passenger seat with active front airbag.

Airbag deactivation ⇨ 49.

Front airbag system

The front airbag system consists of one airbag in the steering wheel and one in the instrument panel on the front passenger side. These can be identified by the word **AIRBAG**.

Additionally there is a warning label on the side of the instrument panel, visible when the front passenger door is open, or on the front passenger sun visor.

The front airbag system is triggered in the event of an accident of a certain severity. The ignition needs to be switched on.

The inflated airbags cushion the impact, thereby reducing the risk of injury to the upper body and head of the front seat occupants considerably.

⚠ Warning

Optimum protection is only provided when the seat is in the proper position ⇨ 35.

Keep the area in which the airbag inflates clear of obstructions.

Fit the seat belt correctly and engage securely. Only then the airbag is able to protect.

Side airbag system

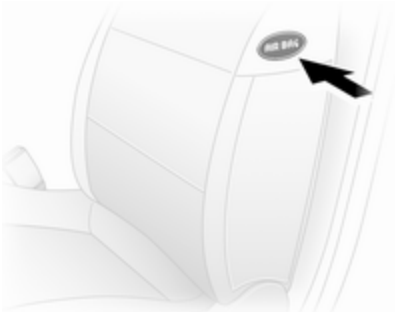

The side airbag system consists of an airbag in each front seat backrest. This can be identified by the word **AIRBAG**.

The side airbag system is triggered in the event of an accident of a certain severity. The ignition needs to be switched on.

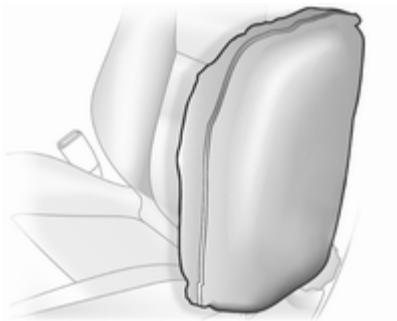

The inflated airbags cushion the impact, thereby reducing the risk of injury to the upper body and pelvis in the event of a side-on collision considerably.

⚠ Warning

Keep the area in which the airbag inflates clear of obstructions.

Note
Only use protective seat covers that have been approved for the vehicle. Be careful not to cover the airbags.

Curtain airbag system

The curtain airbag system consists of an airbag in the roof frame on each side. This can be identified by the word **AIRBAG** on the headlining trim.

The curtain airbag system is triggered in the event of an accident of a certain severity. The ignition needs to be switched on.

The inflated airbags cushion the impact, thereby reducing the risk of injury to the head in the event of a side-on impact considerably.

⚠ Warning

Keep the area in which the airbag inflates clear of obstructions.

Airbag deactivation

Front airbag and side airbag systems for the front passenger seat have to be deactivated if a child restraint system is to be fitted on this seat. The curtain airbag system, the belt tensioners and all driver airbag systems will remain active.

The airbag deactivation system is indicated by a label on the side of the instrument panel, visible when the front passenger door is open.

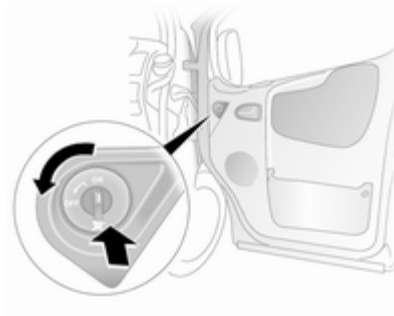

Front passenger airbag system can be deactivated via a switch located on the front passenger door.

With the front passenger door open, press switch in and rotate anti-clockwise to the **OFF** position.

Front passenger seat airbags are deactivated and will not inflate in the event of a collision. Control indicator illuminates continuously in the instrument cluster. A child restraint system can be installed in accordance with the installation locations chart ⇨ 51.

⚠ Danger

Risk of fatal injury for a child using a child restraint system together with activated front passenger airbag.

Risk of fatal injury for an adult person with deactivated front passenger airbag.

As long as control indicator is not illuminated, the airbag systems for the front passenger seat will inflate in the event of a collision.

Change status only when the vehicle is stopped with the ignition off. Status remains until the next change.

If control indicator remains illuminated together with , this indicates a fault within the system. Seek the assistance of a workshop.

Control indicator for airbag deactivation ⇨ 72.

Child restraints

Child restraint systems

We recommend the Opel child restraint system which is tailored specifically to the vehicle.

When a child restraint system is being used, pay attention to the following usage and installation instructions and also those supplied with the child restraint system.

Always comply with local or national regulations. In some countries, the use of child restraint systems is forbidden on certain seats.

⚠ Warning

When using a child restraint system on the front passenger seat, the airbag systems for the front passenger seat must be deactivated; if not, the triggering of the airbags poses a risk of fatal injury to the child.

This is especially the case if rear-facing child restraint systems are used on the front passenger seat.

Airbag deactivation ⇨ 49.

Selecting the right system

The rear seats are the most convenient location to fasten a child restraint system.

Children should travel facing rearwards in the vehicle as long as possible. This makes sure that the child's backbone, which is still very weak, is under less strain in the event of an accident.

Suitable are restraint systems that comply with ECE 44-03 or ECE 44-04. Check local laws and regulations for mandatory use of child restraint systems.

Ensure that the child restraint system to be installed is compatible with the vehicle type.

Ensure that the mounting location of the child restraint system within the vehicle is correct.

Allow children to enter and exit the vehicle only on the side facing away from the traffic.

When the child restraint system is not in use, secure the seat with a seat belt or remove it from the vehicle.

Note

Do not stick anything on the child restraint systems and do not cover them with any other materials.

A child restraint system which has been subjected to stress in an accident must be replaced.

Child restraint installation locations

Permissible options for fitting a child restraint system

Front seats - All variants

	Single seat - front passenger side[1]		Bench seat - front passenger side			
			without airbag		with airbag	
Weight and age class	**without airbag**	**with airbag**	**centre**	**outer**	**centre**	**outer**
Group 0: up to 10 kg or approx. 10 months **Group 0+: up to 13 kg** or approx. 2 years	U	U[2]	X	U	X	U[2]
Group I: 9 to 18 kg or approx. 8 months to 4 years	U	U[2]	UF	U	UF	U[2]
Group II: 15 to 25 kg or approx. 3 to 7 years **Group III: 22 to 36 kg** or approx. 6 to 12 years	U	U[2]	UF	U	UF	U[2]

[1] If adjustable, ensure seat is in its rearmost position. Make sure vehicle seat belt is as straight as possible between shoulder and upper anchorage point.

[2] Ensure the front passenger airbag system is deactivated when installing a child restraint in this position.

Combi - rear seats

Weight and age class	2nd row seats Driver side outer seat	Centre	Passenger side outer seat	3rd row seats[3)4)] Outer	Centre
Group 0: up to 10 kg or approx. 10 months **Group 0+: up to 13 kg** or approx. 2 years	U, +	U, +	U	X	X
Group I: 9 to 18 kg or approx. 8 months to 4 years	U, +	U, +	U	X	X
Group II: 15 to 25 kg or approx. 3 to 7 years **Group III: 22 to 36 kg** or approx. 6 to 12 years	U	U	U	X	X

3) It is only permissible to install a universal child seat to the third seat row as long as the second row seats have been removed and the seat belts are of sufficient length for the child seat type.

4) On vehicles with a 2-seat bench only in the second row, it is permissible to install a universal child restraint on the third seat row but only on the passenger side outer seat (i.e. nearest the sliding side door), due to the increased clearance in front of it.

Tour - rear seats

Weight and age class	2nd row seats Driver side outer seat	Centre	Passenger side outer seat	3rd row seats[3)4)] Outer	Centre
Group 0: up to 10 kg or approx. 10 months **Group 0+: up to 13 kg** or approx. 2 years	U, +	U, +	U	X	X
Group I: 9 to 18 kg or approx. 8 months to 4 years	U, +	U, +	U	X	X
Group II: 15 to 25 kg or approx. 3 to 7 years **Group III: 22 to 36 kg** or approx. 6 to 12 years	U	U	U	X	X

3) It is only permissible to install a universal child seat to the third seat row as long as the second row seats have been removed and the seat belts are of sufficient length for the child seat type.

4) On vehicles with a 2-seat bench only in the second row, it is permissible to install a universal child restraint on the third seat row but only on the passenger side outer seat (i.e. nearest the sliding side door), due to the increased clearance in front of it.

U = Suitable for universal category restraint systems for use in this weight and age class, in conjunction with three-point seat belt.
UF = Suitable for universal category forward-facing restraint systems for use in this weight and age class, in conjunction with three-point seat belt.
+ = Suitable for ISOFIX child restraint system with mounting brackets and anchorage points, where fitted. When mounting an ISOFIX child restraint system, only systems that have been approved for the vehicle may be used. Refer to "Permissible options for fitting an ISOFIX child restraint system".
X = Seat position not suitable for children in this weight and age class.

ISOFIX size class and seat device

A - ISO/F3 = Forward-facing child restraint system for children of maximum size in the weight class 9 to 18 kg.
B - ISO/F2 = Forward-facing child restraint system for smaller children in the weight class 9 to 18 kg.
B1 - ISO/F2X = Forward-facing child restraint system for smaller children in the weight class 9 to 18 kg.
C - ISO/R3 = Rear-facing child restraint system for children of maximum size in the weight class up to 18 kg.
D - ISO/R2 = Rear-facing child restraint system for smaller children in the weight class up to 18 kg.
E - ISO/R1 = Rear-facing child restraint system for young children in the weight class up to 13 kg.

Permissible options for fitting an ISOFIX child restraint system

Weight class	Size class	Fixture	Front seats	2nd row seats			3rd row seats
				Driver side outer seat	Centre	Passenger side outer seat	
Group 0: up to 10 kg	E	ISO/R1	X	IL	IL	X	X
Group 0+: up to 13 kg	E	ISO/R1	X	IL	IL	X	X
	D	ISO/R2	X	IL	IL	X	X
	C	ISO/R3	X	IL	IL[5)]	X	X
Group I: 9 to 18 kg	D	ISO/R2	X	IL	IL	X	X
	C	ISO/R3	X	IL	IL[5)]	X	X
	B	ISO/F2	X	IL, IUF	IL, IUF	X	X
	B1	ISO/F2X	X	IL, IUF	IL, IUF	X	X
	A	ISO/F3	X	IL, IUF	IL, IUF	X	X

IL = Suitable for particular ISOFIX restraint systems of the 'specific-vehicle', 'restricted' or 'semi-universal' categories. The ISOFIX restraint system must be approved for the specific vehicle type.
IUF = Suitable for ISOFIX forward-facing child restraint systems of universal category approved for use in this weight class.
X = No ISOFIX child restraint system approved in this weight class.

5) An ISOFIX child restraint system in this size class can only be fitted on this seat in vehicles with a single front passenger seat.

Isofix child restraint systems

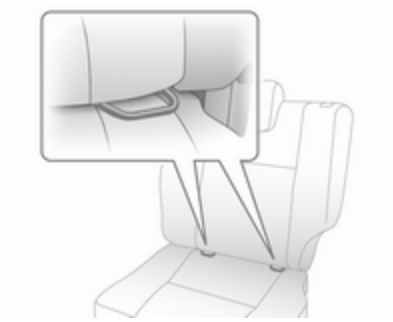

Fasten vehicle-approved ISOFIX child restraint systems to the ISOFIX mounting brackets.

When using ISOFIX mounting brackets for seat mounting, universally approved child restraint systems for ISOFIX may be used.

Permissible mounting location positions for ISOFIX child restraint systems are marked in the tables by +, IL and IUF.

Top-tether fastening eyes

Top-Tether fastening eyes are located on the back of the seat.

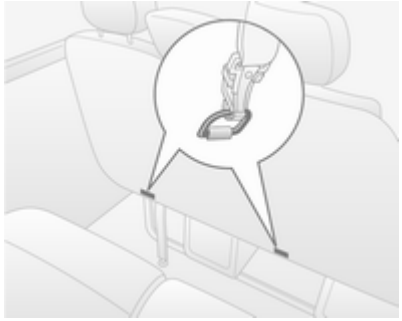

In addition to the ISOFIX mounting, fasten the Top-Tether strap to the Top-Tether fastening eyes. The strap must run between the two guide rods of the head restraint.

ISOFIX child restraint systems of universal category positions are marked in the table by IUF.

Storage

Storage compartments 57
Load compartment 58
Roof rack system 60
Loading information 60

Storage compartments

⚠ Warning

Do not store heavy or sharp objects in the storage compartments. Otherwise, the storage compartment lid could open and vehicle occupants could be injured by objects being thrown around in the event of hard braking, a sudden change in direction or an accident.

Instrument panel storage

Storage compartments, pockets and trays are located in the instrument panel.

A coin holder and/or a phone holder are located on the top of the instrument panel.

Glovebox

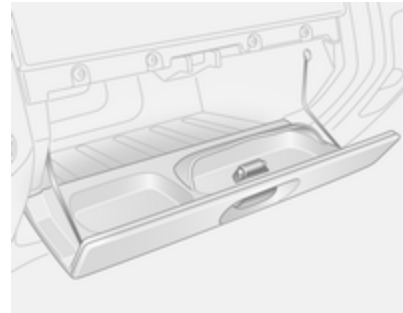

The glovebox features a sunglasses holder.

Close the glovebox while driving.

Cupholders

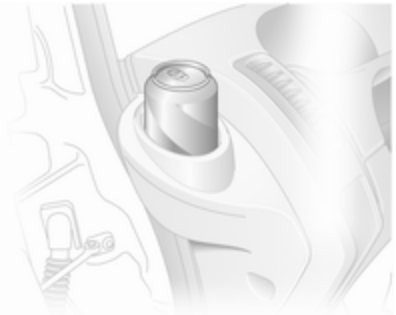

Cupholders are located at either end of the instrument panel.

To use cupholders remove the ashtray unit.

Front storage

Two coat hooks are located on the cabin bulkhead.

The front door pockets contain bottle holders.

Overcab storage

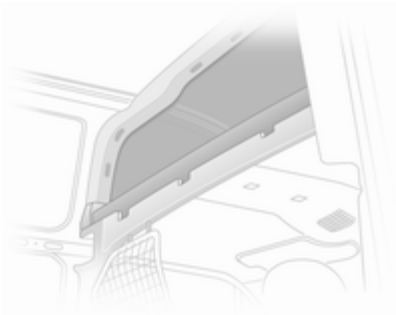

The total weight in this compartment must not exceed 30 kg.

Load compartment

Load compartment cover

Do not place any objects on the cover.

Removing

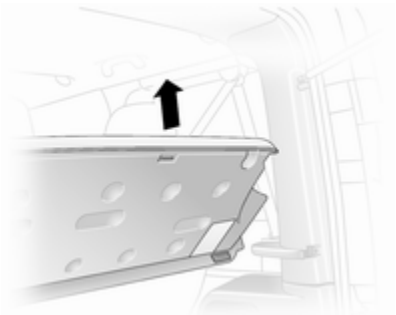

Lift cover and disconnect from the side guides.

Load rails and hooks

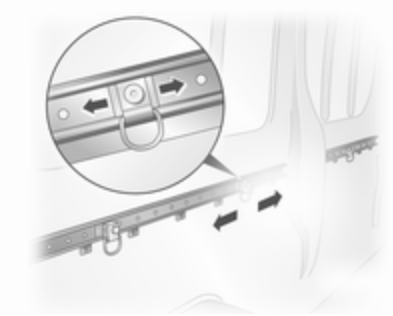

Load anchorage rails mounted in the load compartment provide adjustable anchorage points for securing cargo.

- Release centre pin of the anchorage point by pulling out against spring tension,
- slide the anchorage point to the required position, directly over a suitable locking hole,
- release the centre pin of the anchorage point, ensuring the pin is located correctly and the anchorage point is securely locked,
- cargo can then be secured in position using lashing straps attached to the anchorage point.

The maximum load of each anchorage point is 75 kg. To prevent the possibility of exceeding this maximum, the use of ratchet type lashing straps is to be avoided.

Lashing eyes

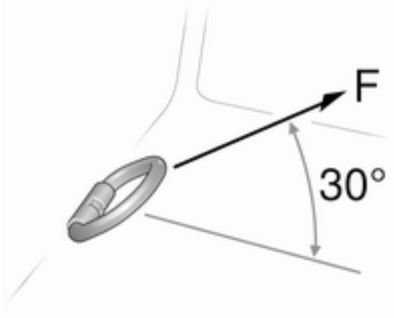

The lashing eyes are designed to secure items against slippage, e.g. using lashing straps or a luggage floor net.

The maximum force applied to the lashing eyes should not exceed 5000 N at 30°.

Safety net

The safety net can be installed behind the front seats or the rear seats.

Passengers must not be transported behind the safety net.

Installing (front or rear position)

Lift the covers to access the mountings, insert the load compartment net rod into the mounts and secure. Attach the straps to the lashing eyes behind the front seats; or to the rings on the rear seat frame, then tension the straps.

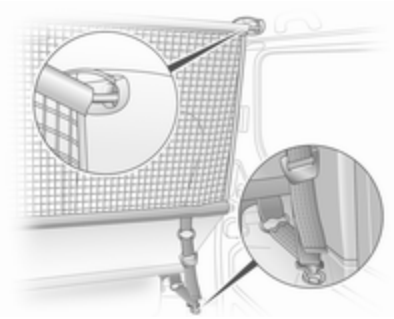

Removal

Tilt strap length adjuster upwards and unhook strap.

Warning triangle

The warning triangle can be accommodated in the space under the front seats.

First aid kit

The first aid kit can be accommodated in the space under the front seats.

Roof rack system

Roof rack

For safety reasons and to avoid damage to the roof, the vehicle approved roof rack system is recommended.

Note
The front roof rack fixing points located above the cab area are for installation of the full roof rack system only and must not be used to attach roof bars.

Follow the installation instructions and remove the roof rack when not in use.

Further information ⇨ 60.

Loading information

- Heavy objects in the load compartment should be evenly distributed and placed as far forward as possible. If objects can be stacked, the heavier objects should be placed at the bottom.
- Secure objects with lashing straps attached to lashing eyes.
- Secure loose objects in load compartment to prevent sliding.
- Do not place any objects on the load compartment cover or the instrument panel.
- The load must not obstruct the operation of the pedals, parking brake and gear selector, or hinder the freedom of movement of the driver. Do not place any unsecured objects in the interior.
- Do not drive with an open load compartment. In addition, the number plate is only distinguishable and illuminated correctly if the doors are closed.

- The payload is the difference between the permitted gross vehicle weight (see identification plate ⇨ 153) and the EC kerb weight.

  To calculate the EC kerb weight, enter the data for your vehicle in the Weights table at the front of this manual.

  The EC kerb weight includes weights for the driver (68 kg), luggage (7 kg) and all fluids (tank 90 % full).

  Optional equipment and accessories increase the kerb weight.
- Driving with a roof load increases the sensitivity of the vehicle to cross-winds and has a detrimental effect on vehicle handling due to the vehicle's higher centre of gravity. Distribute the load evenly and secure it properly with retaining straps. Adjust the tyre pressure and vehicle speed according to the load conditions. Check and retighten the straps frequently.

  Do not drive faster than 120 km/h.

  The permissible roof load (which includes the weight of the roof rack) is 280 kg for standard roof variants and 210 kg for high roof variants (excludes Platform cab conversions). The roof load is the combined weight of the roof rack and the load.

  The permissible roof load on the approved full length roof rack system is 210 kg for standard roof variants and 140 kg for high roof variants (excludes Platform cab conversions). The roof load is the combined weight of the roof rack and the load.

Instruments and controls

Controls 62
Warning lights, gauges and indicators 67
Information displays 76
Vehicle messages 77
Trip computer 78
Tachograph 80

Controls

Steering wheel adjustment

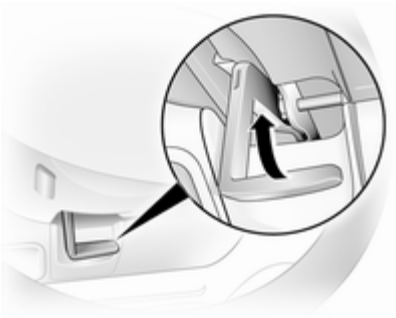

Unlock lever, adjust steering wheel, then engage lever and ensure it is fully locked.

Do not adjust steering wheel unless vehicle is stationary and steering wheel lock has been released.

Steering wheel controls

The cruise control and speed limiter can be operated via the controls on the steering wheel.

Cruise control and speed limiter ⇨ 106.

Horn

Press .

The horn will sound regardless of ignition switch position.

Steering column controls

The Infotainment system can be also operated via the controls on the steering column.

Further information is available in the Infotainment manual.

Windscreen wiper/washer

Windscreen wiper

= timed interval wipe
1 = slow
2 = fast

Do not use if the windscreen is frozen.

Switch off in car washes.

Automatic wiping with rain sensor

= automatic wiping with rain sensor

The rain sensor detects the amount of water on the windscreen and automatically regulates the frequency of the windscreen wipers.

Automatic wiping will need to be reselected whenever the ignition has been switched off.

Adjustable sensitivity of the rain sensor

Turn the adjuster wheel to adjust the sensitivity:

low sensitivity	=	turn adjuster wheel downwards
high sensitivity	=	turn adjuster wheel upwards

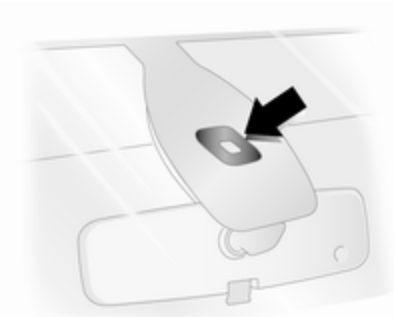

Keep the sensor free from dust, dirt and ice.

Windscreen washer

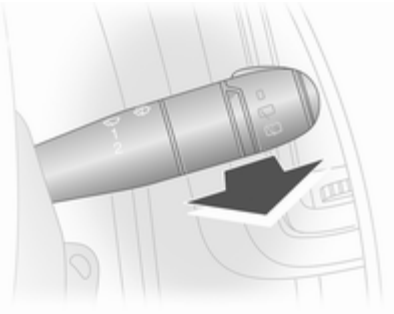

Pull lever. Washer fluid is sprayed onto the windscreen.

short pull	=	wiper swipes once
long pull	=	wiper swipes for a few strokes

Rear window wiper/washer

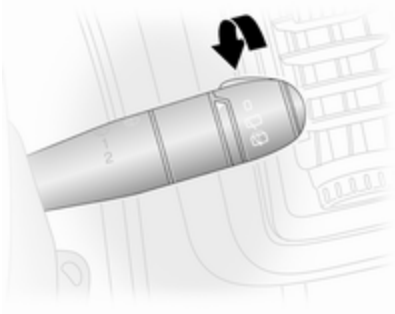

Turn:

0	=	off
	=	wiper operation
	=	washer fluid is sprayed onto the rear window

Outside temperature

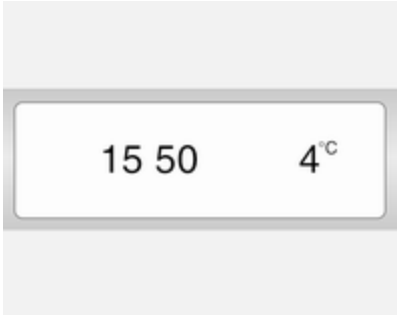

A drop in temperature is indicated immediately and a rise in temperature after a time delay.

If outside temperatures drop to 3 °C, the **°C** flashes in the information display as a warning for icy road conditions. This will continue to flash until temperatures rise above 3 °C.

⚠Warning

The road surface may already be icy even though the display indicates a few degrees above 0 °C.

Clock

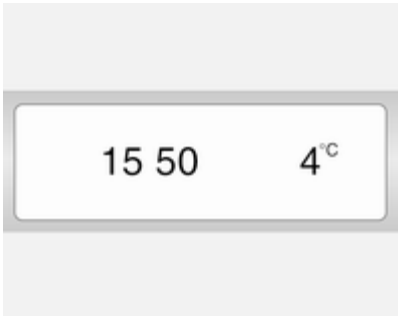

Depending on vehicle, the current time may appear in the information display and/or the Driver Information Centre.

Information display:

Hours and minutes can be adjusted by pressing the appropriate buttons by the display or with the Infotainment system controls.

For further information, refer to the Infotainment system manual.

Driver Information Centre:

Display the clock function by pressing the button repeatedly on the end of the wiper lever. When the time flashes (after approx. 2 seconds), press and hold the button:

- Hours flash,
- Press button repeatedly to change hours,
- Press and hold button to set hours,
- Minutes flash,
- Press button repeatedly to change minutes,
- Press and hold button to set minutes.

Power outlets

12 V power outlets are located in the instrument panel and in the rear of the vehicle.

Connecting electrical accessories while the engine is off will discharge the vehicle battery. Do not exceed the maximum power consumption of 120 watts. Do not connect any current-delivering accessories, e.g. electrical charging devices or batteries.

Electrical accessories that are connected must comply with the electromagnetic compatibility requirements laid down in DIN VDE 40 839.

Do not connect any current-delivering accessories, e.g. electrical charging devices or batteries.

Caution
Do not damage the outlet by using unsuitable plugs.

Cigarette lighter

The cigarette lighter is located in the instrument panel.

Press in cigarette lighter. It switches off automatically once the element is glowing. Pull out lighter.

Ashtrays

Caution
To be used only for ash and not for combustible rubbish.

Portable ashtray

Ashtray container for mobile use in the vehicle. To use, open cover.

Warning lights, gauges and indicators

Speedometer

Indicates vehicle speed.

Maximum speed may be restricted by a speed regulator. As a visible indication of this, a warning label is located on the instrument panel.

A warning buzzer will sound for 10 seconds if the vehicle briefly exceeds the set limit.

Note
Under certain conditions (e.g. steep inclines) the vehicle speed may exceed the set limit.

Odometer

Displays the recorded distance.

Trip odometer

The trip odometer appears below the odometer and displays the distance travelled since the last reset.

To reset, with the trip odometer displayed, press and hold the button on the end of the wiper lever for a few

seconds with the ignition on. The display will flash and the value will reset to zero.

Tachometer

Displays the engine speed.

Drive in a low engine speed range for each gear as much as possible.

Caution
If the needle is in the red warning zone, the maximum permitted engine speed is exceeded. Engine at risk.

Fuel gauge

Displays fuel level in the tank.

The illumination of bars corresponds to fuel level.

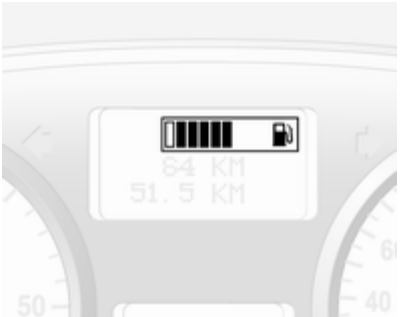

When the tank is full, all bars are illuminated, except the low fuel warning bar (furthest to the left of the fuel gauge), which remains hollow.

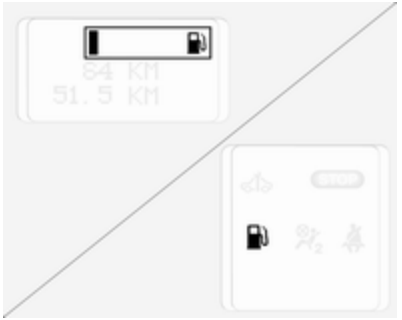

When the low fuel warning bar illuminates in the fuel gauge (i.e. changes from hollow to solid), control indicator ⛽ also illuminates in lower part of instrument cluster ⇨ 70; fuel level is very low: refuel immediately ⇨ 112.

Never run the tank dry. Diesel fuel system, bleeding ⇨ 125.

Note
To ensure the fuel level is displayed correctly, the ignition must be switched off before refuelling. Avoid minor fuel top-ups (e.g. less than 5 litres) to ensure accurate readings.

Because of the fuel remaining in the tank, the top-up quantity may be less than the specified tank capacity.

Engine oil level monitor

The engine oil level monitor is correct only if the vehicle is parked on a level surface with a cold engine.

If the minimum engine oil level is reached, the message **OIL** is displayed in the Driver Information Centre for 30 seconds after the ignition is switched on. Check and top up engine oil ⇨ 119.

If the engine oil level is correct when the ignition is switched on, the message **OIL LEVEL CORRECT** appears briefly in the Driver Information Centre.

If the engine oil is above the minimum level, press the trip computer button on the end of the wiper lever within 30 seconds of switching on the ignition. The message **OIL LEVEL** is displayed in combination with squares that correspond to the oil level.

As the oil level diminishes, the squares in the oil level display are replaced with dashes:

□□□□□□ = Maximum level
□□□- - - = Intermediate level
- - - - - - = Minimum level.

To exit the oil level monitor display, press the trip computer button.

Trip computer ⇨ 78.

Service display

When the ignition is switched on, the remaining distance before the next service is due may be shown briefly in the Driver Information Centre. Based on driving conditions, the interval at which a service will be indicated can vary considerably.

When the remaining distance before the next service is less than 3000 km or 2 months, **SERVICE IN** appears in the Driver Information Centre.

When the distance reaches 0 km or the service date is due, control indicator and illuminate in the instrument cluster and the Driver Information Centre respectively, and the corresponding message **SERVICE DUE** appears in the Driver Information Centre.

The vehicle needs a service. Seek the assistance of a workshop.

Resetting the service display

After a service, the service display must be reset. If available, select the distance before service display in the Driver Information Centre, then press and hold the button on the end of the wiper lever for approx. 10 seconds until the distance before service is displayed continuously. Trip computer ⇨ 78.

Driver Information Centre ⇨ 76.

Service information ⇨ 148.

Transmission display

The mode or selected gear of the manual transmission automated is shown in the Driver Information Centre.

R = Reverse gear
N = Neutral
A = Automatic mode
kg = Laden mode
= Winter mode
= Apply foot brake
= Transmission electronics

Manual transmission automated ⇨ 99.

Control indicators

The control indicators described are not present in all vehicles. The description applies to all instrument versions.

Depending on the equipment the position of the control indicators may vary.

When the ignition is switched on, most control indicators will illuminate briefly as a functionality test.

The control indicator colours mean:

red = danger, important reminder
yellow = warning, information, fault
green = confirmation of activation
blue = confirmation of activation

Control indicators in the instrument cluster

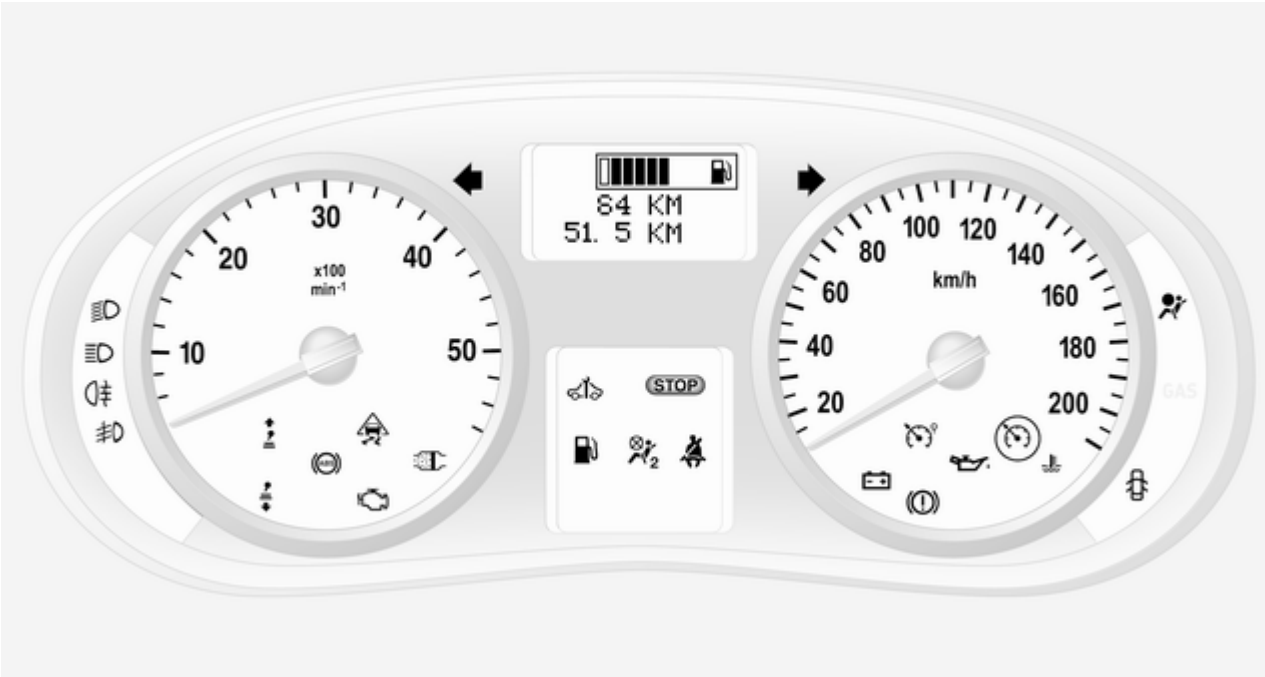

Turn signal

⇦⇨ flashes green.

Flashes if a turn signal or the hazard warning flashers are activated.

Rapid flashing: failure of a turn signal light or associated fuse.

An audible warning can be heard when the turn signals are on. When towing a trailer, the pitch of the audible warning changes.

Bulb replacement ⇨ 126.

Fuses ⇨ 130.

Turn signals ⇨ 83.

Seat belt reminder

illuminates in red.

If the seat belt is not fastened, will flash when vehicle speed exceeds approx. 16 km/h. An audible warning also sounds for approx. 90 seconds.

⚠Warning

Fasten seat belt before each trip.

In the event of an accident, people not wearing seat belts endanger their fellow occupants and themselves.

Airbag and belt tensioners

illuminates yellow.

When the ignition is switched on, the control indicator illuminates briefly. If it does not illuminate or illuminates whilst driving, there is a fault in the belt tensioner or the airbag system. The airbags and belt tensioners may fail to trigger in the event of an accident.

Deployment of the belt tensioners or airbags is indicated by continuous illumination of .

⚠Warning

Have the cause of the fault remedied immediately by a workshop.

Belt tensioners, airbag system ⇨ 41, ⇨ 44.

Airbag deactivation

illuminates yellow when the ignition is switched on and remains illuminated when the front passenger airbag has been deactivated.

If control indicator is illuminated in conjunction with or , seek the assistance of a workshop.

⚠ Danger

Risk of fatal injury for a child using a child restraint system together with activated front passenger airbag.

Risk of fatal injury for an adult person with deactivated front passenger airbag.

Airbag system ⇨ 44, belt tensioners ⇨ 41, airbag deactivation ⇨ 49.

Charging system

illuminates red.

Illuminates when the ignition is switched on and goes out shortly after the engine starts.

Illuminates when the engine is running

Stop, switch off engine. Vehicle battery is not charging. Engine cooling may be interrupted. Power to the brake servo unit may be cut. Seek the assistance of a workshop.

Malfunction indicator light

illuminates or flashes yellow.

Illuminates when the ignition is switched on and goes out shortly after the engine starts.

Illuminates when the engine is running

Fault in the emission control system. The permitted emission limits may be exceeded. Seek the assistance of a workshop immediately.

Flashes when the engine is running

Fault that could lead to catalytic converter damage. Ease up on the accelerator until the flashing stops. Seek the immediate assistance of a workshop.

Service vehicle soon

illuminates in yellow.

Illuminates when the ignition is switched on and goes out shortly after the engine starts.

May illuminate in combination with another control indicator or a message in the Driver Information Centre. Seek the assistance of a workshop immediately.

Stop engine

STOP illuminates in red.

Illuminates together with , , or ; stop engine immediately and seek the assistance of a workshop.

Brake system

illuminates red.

Illuminates when the parking brake is released if the brake fluid level is too low ⇨ 123.

⚠ Warning

Stop. Do not continue your journey. Consult a workshop.

Illuminates after the ignition is switched on if the parking brake is applied ⇨ 104.

If the message **BRAKING FAULT** appears in the Driver Information Centre there is a fault in the braking system. Seek the assistance of a workshop immediately.

Brake system ⇨ 103.

Antilock brake system (ABS)

(ABS) illuminates yellow.

Illuminates briefly after the ignition is switched on. The system is ready for operation when (ABS) goes out.

If control indicator (ABS) does not go out after a few seconds, or if it illuminates while driving, there is a fault in the ABS. Control indicator may also illuminate in the instrument cluster together with the messages **CHECK ABS** and **CHECK ESP** in the Driver Information Centre. The brake system remains operational but without ABS regulation.

If control indicators (ABS), , (!) and STOP illuminate, the ABS and ESP are deactivated and the message **BRAKING FAULT** appears in the Driver Information Centre. Seek the assistance of a workshop immediately.

Antilock brake system ⇨ 103.

Upshift

or illuminates green.

It is recommended to shift gear when illuminated to improve fuel economy.

Electronic Stability Program

flashes or illuminates yellow.

Illuminates for a few seconds when the ignition is switched on.

Flashing during driving

The system is actively engaged. Engine output may be reduced and the vehicle may be braked automatically to a small degree.

Illuminates while driving

The system is switched off. The message **ESP OFF** will also appear in the Driver Information Centre.

ESP®Plus ⇨ 105.

Engine coolant temperature

illuminates red.

Illuminates when the engine is running

Stop, switch off engine.

Caution
Coolant temperature too high.

Check coolant level ⇨ 121.

If there is sufficient coolant, consult a workshop.

Preheating

illuminates yellow.

Preheating is activated. Only activates when outside temperature is low.

Engine oil pressure

illuminates red.

Illuminates when the ignition is switched on and goes out shortly after the engine starts.

Illuminates when the engine is running

Caution

Engine lubrication may be interrupted. This may result in damage to the engine and/or locking of the drive wheels.

1. Depress clutch.
2. Select neutral gear, set selector lever to **N**.
3. Move out of the flow of traffic as quickly as possible without impeding other vehicles.
4. Switch off ignition.

⚠Warning

When the engine is off, considerably more force is needed to brake and steer.

Do not remove key until vehicle is stationary, otherwise the steering wheel lock could engage unexpectedly.

Check oil level before seeking assistance of a workshop ⇨ 119.

Low fuel

illuminates yellow.

Illuminates when level in fuel tank is too low; refuel immediately ⇨ 112

Catalytic converter ⇨ 98.

Bleeding the diesel fuel system ⇨ 125.

Exterior light

D illuminates green.

Illuminated when the exterior lights are on ⇨ 81.

High beam

D illuminates blue.

Illuminated when high beam is on and during headlight flash ⇨ 82.

Fog light

D illuminates green.

Illuminated when the front fog lights are on ⇨ 83.

Rear fog light

illuminates yellow.

Illuminated when the rear fog light is on ⇨ 84.

Cruise control

, illuminates green.

illuminates green when a certain speed is stored.

illuminates green when the system is on.

Speed limiter

illuminates yellow.

illuminates yellow when the system is on.

Cruise control, Speed limiter ⇨ 106.

Information displays

Driver Information Centre

Depending on vehicle configuration, the following items appear in the display:

- Odometer, trip odometer ⇨ 67
- Fuel gauge ⇨ 68
- Engine oil level monitor ⇨ 69
- Service display ⇨ 69
- Transmission display ⇨ 70
- Vehicle messages ⇨ 77
- Trip computer ⇨ 78

Triple-Info-Display

Displays time, outside temperature and Infotainment system information.

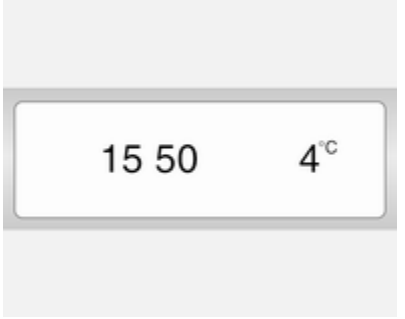

- Outside temperature ⇨ 65
- Clock ⇨ 65

For further information, refer to the Infotainment system manual.

Vehicle messages

Messages are shown in the Driver Information Centre, in combination with illumination of control indicator ⚠ or STOP in the instrument cluster.

Information messages

Information messages
BATTERY MODE: ECONOMY
ESP OFF
AUTO LIGHTS DEACTIVATED
OIL LEVEL CORRECT

Fault messages

Will be displayed in combination with control indicator ⚠. Drive with caution and seek the assistance of a workshop.

To remove fault message, press the button on the end of the wiper lever. After a few seconds the message may disappear automatically and ⚠ remains illuminated. The fault will then be stored in the on board system.

Fault messages
CHECK ESP
CHECK FUEL FILTER
CHECK GEARBOX
CHECK AUTO LIGHTS

Warning messages

These appear with control indicator STOP. Stop engine immediately and seek the assistance of a workshop.

Warning messages
INJECTION FAULT
ENGINE OVERHEATING
GEARBOX OVERHEATING

Warning chimes

When starting the engine or whilst driving:

- During operation of the turn and lane-change signals.
- If seat belt is not fastened.
- If the parking assist detects an object.
- If the vehicle has manual transmission automated and the clutch temperature is too high.
- In vehicles with manual transmission automated; when a door is open while neutral is not selected. A corresponding message appears in the Driver Information Centre.
- If the vehicle speed briefly exceeds a set limit.

When the vehicle is parked and/ or the driver's door is opened:

- When the key has been left in the ignition.
- With exterior lights on.
- If the vehicle has manual transmission automated; neutral is not selected or the foot brake has not been depressed.

Engine oil level

If the minimum engine oil level is reached, the message **OIL** is displayed in the Driver Information Centre for 30 seconds after the ignition is switched on. Check oil level ⇨ 119.

The oil level message will only be reset if the ignition has been switched off for more than 2 minutes.

To gain a more accurate indication of the oil level, press the button on the end of the wiper lever within 30 seconds of switching on the ignition. Engine oil level monitor ⇨ 69.

Trip computer

The trip computer provides information on driving data, which is continually recorded and evaluated electronically.

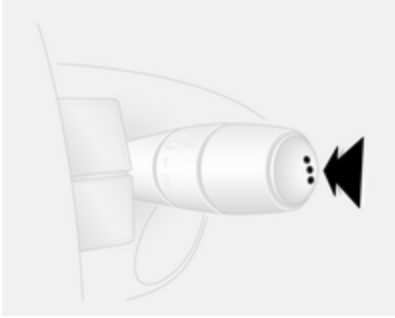

Depending on vehicle, the following functions can be selected by pressing the button repeatedly on the end of the wiper lever:

- Fuel used
- Average consumption
- Instantaneous consumption
- Range

- Distance travelled
- Average speed
- Distance before service
- Clock
- Cruise control and speed limiter stored speed
- Fault and information messages

Fuel used

Displays the amount of fuel consumed since the last reset.

The measurement can be restarted at any time by pressing and holding the button.

Average consumption

The value is displayed after driving a distance of 400 metres.

Average consumption is displayed, taking into consideration the distance travelled and the fuel used since the last reset.

The measurement can be restarted at any time.

Instantaneous consumption

The value is displayed after reaching a speed of 30 km/h.

Range

The value is displayed after driving a distance of 400 metres.

The range is calculated from the current contents of the fuel tank and the average consumption since the last reset.

The range will not display if control indicator ⛽ is illuminated in the instrument cluster ⇨ 75.

The measurement can be restarted at any time.

Distance travelled

Displays the distance driven since the last reset.

The measurement can be restarted at any time.

Average speed

The value is displayed after driving a distance of 400 metres.

The average speed since the last reset is displayed.

The measurement can be restarted at any time.

Interruptions in the journey with the ignition off are not included in the calculations.

Reset trip computer information

To reset the trip computer, select one of its functions then press and hold the button on the end of the wiper lever.

The following trip computer information will be reset:

- Fuel used
- Average consumption
- Range
- Distance travelled
- Average speed

The trip computer will reset automatically when the maximum value of any of the parameters is exceeded.

Interruption of power supply

If the power supply has been interrupted or if the vehicle battery voltage has dropped too low, the values stored in the trip computer will be lost.

Tachograph

The tachograph is operated as described in the operating instructions supplied. Observe regulations regarding use.

When a tachograph is fitted the total distance travelled is shown only on the tachograph and not in the odometer within the instrument display.

Lighting

Exterior lighting 81
Interior lighting 84
Lighting features 85

Exterior lighting

Light switch

Turn light switch:

0 = Off
☼ = Sidelights
≡D ≡D = Headlights

High beam control indicator ≡D ⇨ 75.

Low beam control indicator ≡D ⇨ 75.

Automatic light control

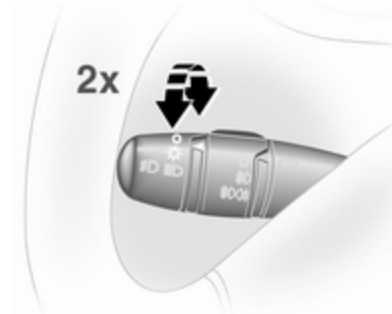

When the automatic light control function is activated and the engine is running, the system switches between daytime running lights and headlights depending on the lighting conditions.

To activate:

1. Switch on the ignition.
2. Turn light switch to ☼ and return to **0**.

3. Repeat step 2 within approx. 5 seconds.
4. A double acoustic signal sounds for confirmation.

Repeat the operation to deactivate.

For reasons of safety, it is advisable to have the automatic light control function activated.

Daytime running lights

Daytime running lights increase visibility of the vehicle during daylight. The lights operate automatically when the ignition is switched on.

Automatic headlight activation

During poor lighting conditions the headlights are switched on.

High beam

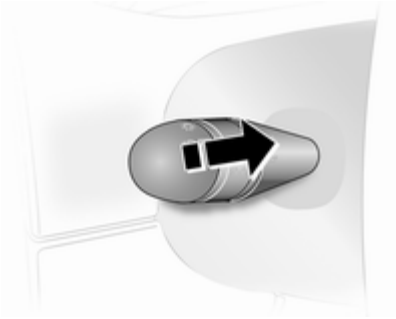

To change between low and high beam, pull lever until a click is felt.

Headlight flash

To activate the headlight flash, pull lever.

Headlight range adjustment

Manual headlight range adjustment

Adapt the headlight range to suit the vehicle load to prevent dazzling of oncoming traffic.

Turn knurled wheel to required position:

0 = No load
4 = Loaded up to permissible maximum weight

Headlights when driving abroad

The asymmetrical headlight beam extends visibility at the edge of the road at the passenger side.

However, when driving in countries where traffic drives on the opposite side of the road, adjust the headlights to prevent dazzling of oncoming traffic.

Have the headlights adjusted by a workshop.

Hazard warning flashers

Operated with the ⚠ button.

Turn and lane-change signals

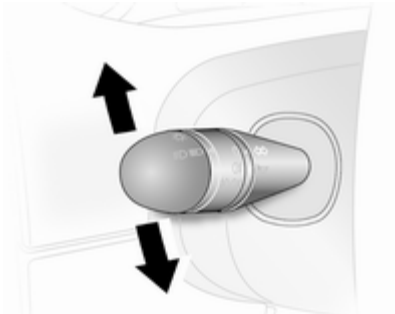

Lever up = right turn signal
Lever down = left turn signal

When the steering wheel is turned back, the lever automatically returns to its original position and the indicator is deactivated. This will not happen when making a minor steering manoeuvre such as lane changing.

When lane changing, move lever part way to first stop. When released, lever will spring back.

If the lever is moved past the first stop, the indicator is switched on constantly. Switch the indicator off manually by moving the lever to its original position.

Front fog lights

Turn inner switch to position ≠D.

Front fog lights will only operate when the ignition and headlights are switched on.

Rear fog lights

Turn inner switch to position ≡DC≡.

Rear fog light comes on in conjunction with front fog lights and will only operate when the ignition and headlights are switched on.

Reversing lights

The reversing lights come on when the ignition is on and reverse gear is selected.

Misted light covers

The inside of the light covers may mist up briefly in poor, wet and cold weather conditions, in heavy rain or after washing. The mist disappears quickly by itself; to help, switch on the headlights.

Interior lighting

Interior lights

Depending on vehicle, the interior lights may be operated with a switch or by tilting the lens to one of 3 positions, i.e.:

- On
- Courtesy lights
- Off

With the switch or lens in its central position, the light functions as a courtesy light and illuminates when the front doors are opened.

When the front doors are closed, the courtesy light extinguishes after approx. 20 seconds or immediately after the ignition is switched on.

Load compartment lighting

Load compartment lighting can be set to illuminate when the side and rear doors are opened, or switched on constantly.

Operated by tilting the lens to one of 3 positions, i.e.:

- On
- Controlled by the function of the front interior light
- Off

When the front interior light is functioning as a courtesy light, move the lens of the load compartment light to its central position; the load compartment light functions as a courtesy light and also illuminates when the side or rear doors are opened.

When the doors are closed, the courtesy light extinguishes after approx. 20 seconds or immediately after the ignition is switched on.

Reading lights

A separate spotlight for the front passenger side may be located alongside the front interior light. Operated with the switch.

Lighting features

Exit lighting

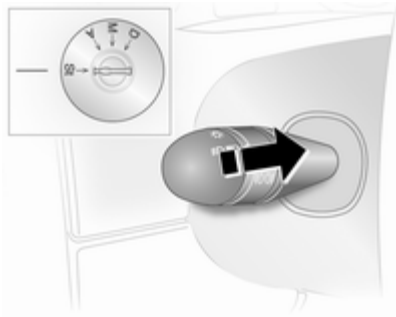

Headlights come on for approx. 30 seconds after the vehicle is parked and the system is activated.

Activating

1. Switch off ignition.
2. Remove ignition key.
3. Open driver's door.
4. Pull turn signal lever towards steering wheel.

This action can be repeated up to four times to a maximum period of 2 minutes.

The lighting is turned off immediately by switching on the ignition or turning the light switch.

Climate control

Climate control systems 86
Air vents 92
Maintenance 93

Climate control systems

Heating and ventilation system

Controls for:

- Temperature
- Fan speed
- Air distribution

Heated rear window ⇨ 33.

Temperature

red = warm
blue = cold

Heating will not be fully effective until the engine has reached normal operating temperature.

Fan speed

Adjust the air flow by switching the fan to the desired speed.

Air distribution

= to head area
= to head area and foot well
= to foot well
= to windscreen, front door windows and foot well
= to windscreen and front door windows

Intermediate settings are possible.

Demisting and defrosting the windows

- Set temperature control to warmest level.
- Set fan speed to highest level.
- Set air distribution control to .
- Switch on heated rear window .

- Open side air vents as required and direct them towards door windows.
- For simultaneous warming of the foot well, set air distribution control to .

Air conditioning system

Additional to the heating and ventilation system, the air conditioning system has:

AC = cooling
 = air recirculation

Cooling (AC)

Operated with the AC button and functional only when the engine and fan are running.

The air conditioning system cools and dehumidifies (dries) the air when outside temperature is a little above the freezing point. Therefore condensation may form and drip from under the vehicle.

If no cooling or drying is required, switch the cooling system off to save fuel.

Air recirculation system

Operated with the button.

⚠ Warning

The exchange of fresh air is reduced in air recirculation mode. In operation without cooling the air humidity increases, so the windows may mist up. The quality of the passenger compartment air deteriorates, which may cause the vehicle occupants to feel drowsy.

In warm and very humid ambient air conditions, the windscreen might mist up from outside when cold air is directed towards it. If windscreen mists up from outside, activate windscreen wiper and avoid the use of air distribution settings and .

Maximum cooling

Briefly open the windows so that hot air can disperse quickly.

- Cooling AC on.
- Air recirculation system on.
- Set air distribution control to .
- Set temperature control to coldest level.
- Set fan speed to highest level.
- Open all air vents.

Rear heating system

The rear passenger compartment heating fan assists air flow to the rear passenger compartment via the rear air vents.

Note
Country-specific version: Heating will cease to operate if the vehicle fuel level drops below 11 litres.

The rate of air flow is determined by the fan. Air temperature is controlled using the temperature control on the instrument panel.

The fan has 3 speeds:

0 = off
3 = high speed

Rear air conditioning system

The rear air conditioning system is actuated in conjunction with the front passenger compartment air conditioning system.

Rear air conditioning fan switch

The rear air conditioning fan assists air flow to the rear passenger compartment via the rear air vents.

Switch on the fan while the air conditioning system is operating to allow cooled and dehumidified (dried) air to be distributed.

The rate of air flow is determined by the fan.

The fan has 3 speeds:

0 = off
3 = high speed

Auxiliary heater

Coolant heater

The Eberspächer engine-independent, fuel-powered coolant heater provides rapid heating of the engine coolant to enable heating of the vehicle interior without the engine running.

⚠Warning

Do not operate the system when refuelling, when dust or combustible vapours are present or in enclosed spaces (e.g. garage).

Before starting or programming the system to start, turn the vehicle's climate control system to heat and the air distribution to .

Switch off when not required. Heating stops automatically after the programmed runtime. It will also cease to operate if the vehicle fuel level drops too low.

During operation, power from the vehicle battery is used. The driving time should therefore be at least as long as the heating time. For short journey times, check the vehicle battery regularly and recharge if necessary.

To ensure efficient performance, briefly operate the auxiliary heater once a month.

Control units

The timer or remote control unit turns the system on and off, and is used to programme specific departure times.

Timer

1 ⏻ Activation button	=	Switches the control unit on/off and changes displayed information
2 ← Back button	=	Selects functions in the menu bar and adjusts values
3 Menu bar	=	Displays the selectable functions , , P, and
4 → Next button	=	Selects functions in the menu bar and adjusts values
5 OK button	=	Confirms selection

Remote control

The control buttons operate identically to the timer unit described previously.

To activate the remote control, press activation button ⏻ and release it when the menu bar appears in the display. The signal indicator and **SENd** appear briefly in the display, followed by the temperature.

⚠Warning

When refuelling, switch off the remote control unit as well as the heater!

To switch off, press and hold activation button ⏻ to prevent inadvertent operation.

The remote control has a maximum range of 600 metres. The range may be reduced due to environmental conditions and as the battery becomes weaker.

In addition to the remote control unit, the heating can also be switched on for 30 minutes, or off, using the button on the instrument panel.

Battery replacement

Replace the battery when the range of the remote control is reduced or when the battery charge symbol flashes.

Open the cover using a coin and replace the battery (CR 2430 or equivalent), ensuring the new battery is correctly installed with the positive (+) side facing the positive terminals. Replace the cover securely.

Dispose of old batteries in accordance with environmental regulations.

Batteries do not belong in household waste. They must be disposed of at an appropriate recycling collection point.

Remote control fault displays

cobA	=	Poor signal – adjust position
conP	=	No signal – move closer
bALo	=	Battery low – change battery
Err	=	System error – consult workshop
Add, AddE	=	System in learning mode

Teach remote control

If the vehicle battery is reconnected, the LED in the instrument panel button illuminates and the system configures the remote control menu automatically. If the LED flashes, press **OK** button on remote control, select **Add** or **AddE** and confirm.

Additional remote control units may also be configured. Press the button until LED flashes, switch on the remote control, select **Add** and confirm.

AddE teaches the current remote control unit exclusively and blocks all previously configured units. **Add** teaches up to 4 remote control units, but only one unit can operate the system at any one time.

Operation

Heating ♨

Select ♨ in the menu bar and confirm. The predetermined heating duration, e.g. **L 30**, flashes in the display. The factory setting is 30 minutes.

To temporarily adjust the heating duration, adjust with the ▲ or ▼ button and confirm. The value can be set from 10 to 120 minutes. Due to the power consumption, note the heating duration.

To switch off, select ♨ in the menu bar again and confirm.

Ventilation ✠

Select ✠ in the menu bar and confirm.

The ventilation duration can be accepted or adjusted. The duration shown is accepted without confirmation.

To switch off, select ✠ in the menu bar again and confirm.

Programming P

Up to 3 preset departure times can be programmed, either during one day or over one week.

- Select **P** in the menu bar and confirm
- Select desired preset memory number **1**, **2** or **3** and confirm
- Select day and confirm
- Select hour and confirm
- Select minutes and confirm
- Select ♨ or ✠ and confirm
- If necessary, adjust the runtime duration prior to departure and confirm

The next preset memory number to be activated is underlined and the weekday is displayed. Repeat the procedure to programme the other preset memory numbers.

Pressing button ⏻ during the procedure will exit without storing programme adjustments.

To delete a preset departure time, follow the steps for programming until heating symbol ♨ flashes. Press button ▲ or ▼ until **oFF** appears in the display and confirm.

Heating stops automatically 5 minutes after the programmed departure time.

Note
The remote control system features a temperature sensor which calculates the runtime according to the ambient temperature and the

desired heating level (ECO or HIGH). The system starts automatically between 5 and 60 minutes prior to the programmed departure time.

Set weekday, time and heating duration ◴

If the vehicle battery is disconnected or its voltage is too low, the unit will need to be reset.

- Select ◴ and confirm
- Select weekday and confirm
- Change hours and confirm
- Change minutes and confirm
- Change the default heating duration and confirm

Heating level ↻

The preferred heating level for programmed departure times can be set to either ECO or HIGH.

Select ↻ and confirm. ECO or HIGH flashes in the display. Adjust using the ▬ or ▬ button and confirm.

Air vents

Adjustable air vents

At least one air vent must be open while cooling is on in order to prevent the evaporator from icing up due to lack of air movement.

Centre air vents

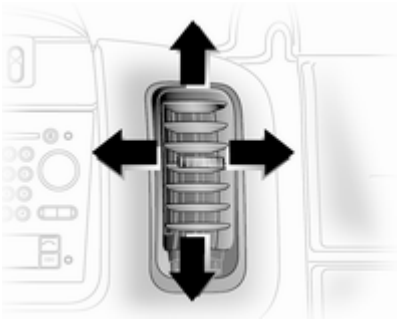

To open or close the vent, turn the adjuster wheel left or right.

Direct the flow of air by tilting and swivelling the slats.

Side air vents

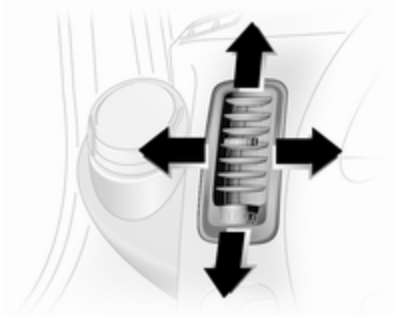

To open or close the side air vents, turn the adjuster wheel left or right.

Direct the flow of air by tilting and swivelling the slats.

Depending upon the position of the temperature control, air will be directed into the vehicle via the side air vents.

⚠ Warning

Do not attach any objects to the slats of the air vents. Risk of damage and injury in case of an accident.

Fixed air vents

Additional air vents are located beneath the windscreen and door windows and in the foot wells.

Rear passenger compartment air vents

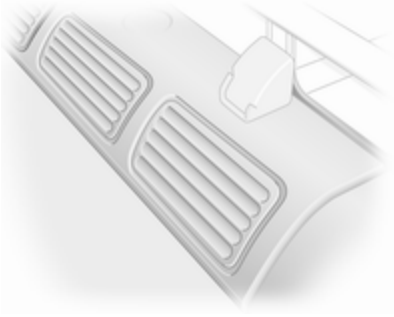

The air flow is biased towards the central and right hand air vents for optimum distribution.

Maintenance

Air intake

The air intake in front of the windscreen in the engine compartment must be kept clear to allow air intake. Remove any leaves, dirt or snow.

Pollen filter

The pollen filter cleans dust, soot, pollen and spores from the air entering the vehicle through the air intake.

Air conditioning regular operation

In order to ensure continuously efficient performance, cooling must be operated for a few minutes once a month, irrespective of the weather and time of year. Operation with cooling is not possible when outside temperature is too low.

Service

For optimal cooling performance, it is recommended that the climate control system be checked annually, starting three years after initial vehicle registration, including:

- Functionality and pressure test
- Heating functionality
- Leakage check
- Check of drive belts
- Cleaning of condenser and evaporator drainage
- Performance check

Driving and operating

Driving hints 95
Starting and operating 96
Engine exhaust 97
Manual transmission 98
Manual transmission automa-
ted 99
Brakes 103
Ride control systems 104
Cruise control 106
Object detection systems 110
Fuel 111
Trailer hitch 114

Driving hints

Control of the vehicle

Never coast with engine not running

Many systems will not function in this situation (e.g. brake servo unit, power steering). Driving in this manner is a danger to yourself and others.

Pedals

To ensure the pedal travel is uninhibited, there must be no mats in the area of the pedals.

Steering

If power steering assist is lost because the engine stops or due to a system malfunction, the vehicle can be steered but may require increased effort.

Caution

Vehicles equipped with hydraulic power steering:

If the steering wheel is turned until it reaches the end of its travel, and is held in that position for more than 15 seconds, damage may occur to the power steering system and there may be loss of power steering assist.

Starting and operating

New vehicle running-in

Do not brake unnecessarily hard for the first few journeys and after new disc brake pads have been fitted.

During the first drive, smoke may occur because of wax and oil evaporating off the exhaust system. Park the vehicle in the open for a while after the first drive and avoid inhaling the fumes.

During the running-in period fuel and engine oil consumption may be higher and the cleaning process of the diesel particle filter may take place more often.

Diesel particle filter ⇨ 97.

Ignition switch positions

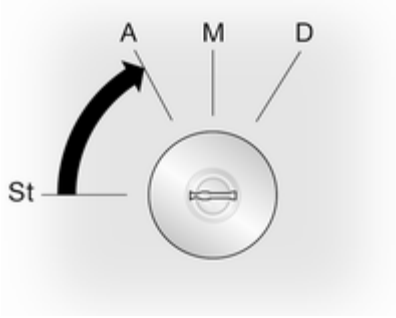

St = Ignition off
A = Steering wheel lock released, ignition off
M = Ignition on. Diesel engines: preheating
D = Starting

Starting the engine

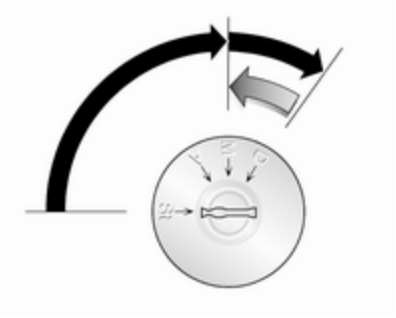

Manual transmission: operate clutch.

Manual transmission automated: operate brake; transmission automatically shifts to **N**.

Do not accelerate.

Diesel engines: turn the key to position **M** for preheating until control indicator ⌇ extinguishes from the Driver Information Centre.

Turn key to position **D** and release.

The increased engine speed automatically returns to normal idling speed as the engine temperature rises.

Start attempts should not last longer than 15 seconds. If engine does not start, wait 15 seconds before repeating starting procedure. If necessary, depress accelerator before repeating starting procedure.

Before restarting or to switch off the engine, turn key back to **St**.

Overrun cut-off

The fuel supply is automatically cut off during overrun, i.e. when the vehicle is driven with a gear engaged but accelerator is released.

Parking

- Do not park the vehicle on an easily ignitable surface. The high temperature of the exhaust system could ignite the surface.
- Always apply parking brake without pressing release button. Apply as firmly as possible on a downhill or uphill slopes. Operate the foot brake at the same time to reduce operating force.
- Switch off the engine and ignition. Turn the steering wheel until the steering wheel lock is felt to engage.
- If the vehicle is on a level surface or uphill slope, engage first gear before switching off the ignition. On an uphill slope, turn the front wheels away from the kerb.

  If the vehicle is on a downhill slope, engage reverse gear before switching off the ignition. Turn the front wheels towards the kerb.
- Lock the vehicle and activate the anti-theft locking and anti-theft alarm systems.

Engine exhaust

⚠ Danger

Engine exhaust gases contain poisonous carbon monoxide, which is colourless and odourless and could be fatal if inhaled.

If exhaust gases enter the interior of the vehicle, open the windows. Have the cause of the fault rectified by a workshop.

Avoid driving with an open load compartment, otherwise exhaust gases could enter the vehicle.

Diesel particle filter

The diesel particle filter system filters harmful soot particles out of the exhaust gases. The system includes a self-cleaning function that runs automatically during driving without any notification. The filter is cleaned by periodically burning off the soot particles at high temperature. This

process takes place automatically and the emission of smells and smoke during this process is normal.

If cleaning of the filter is required and automatic cleaning does not occur, it will be indicated by the illumination of control indicator and in the instrument cluster. Seek the assistance of a workshop immediately.

Catalytic converter

The catalytic converter reduces the amount of harmful substances in the exhaust gases.

Caution

Fuel grades other than those listed on pages ⇨ 111, ⇨ 157 could damage the catalytic converter or electronic components.

Unburnt petrol will overheat and damage the catalytic converter. Therefore avoid excessive use of the starter, running the fuel tank dry and starting the engine by pushing or towing.

In the event of misfiring, uneven engine running, a reduction in engine performance or other unusual problems, have the cause of the fault rectified by a workshop as soon as possible. In an emergency, driving can be continued for a short period, keeping vehicle speed and engine speed low.

If control indicator flashes, the permitted emission limits may be exceeded. Lift your foot off the accelerator until stops flashing and is steadily illuminated. Contact a workshop immediately.

Malfunction indicator light ⇨ 73

Manual transmission

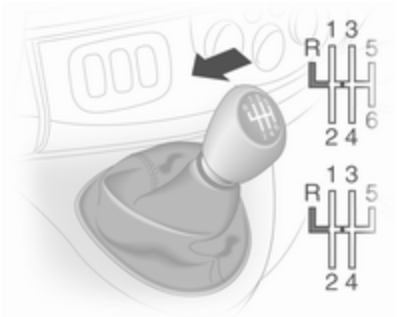

To engage reverse, with the vehicle stationary depress the clutch pedal, pull up the collar on the selector lever and engage the gear against the resistance.

If the gear does not engage, set the lever in neutral, release the clutch pedal and depress again; then repeat gear selection.

Do not slip the clutch unnecessarily.

When operating, depress the clutch pedal completely. Do not use the pedal as a foot rest.

Caution
It is inadvisable to drive with hand resting on the selector lever.

Manual transmission automated

This transmission permits manual (manual mode) or automatic gear shifting (automatic mode), both with automatic clutch control.

Transmission display

Shows the mode and current gear.

Starting the engine

Depress the foot brake when starting the engine. If the foot brake is not depressed, illuminates in the transmission display and the engine cannot be started.

When the foot brake is depressed, the transmission automatically shifts to **N** (neutral); "N" appears in the transmission display and the engine can be started. There may be a slight delay.

Selector lever

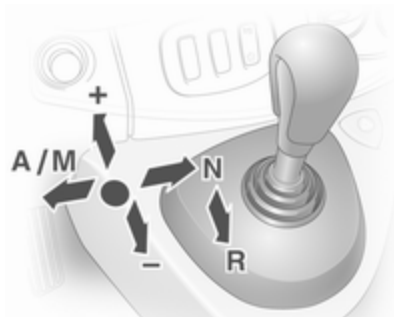

Always move the selector lever in the appropriate direction as far as it will go. Upon release, it automatically returns to the centre position.

N	=	Neutral.
A/M	=	Switch between automatic and manual mode. The transmission display shows "A" when in automatic mode.
R	=	Reverse gear. Engage only when vehicle is stationary. The transmission display shows "R" when reverse gear is engaged.
+	=	Shift to a higher gear.
-	=	Shift to a lower gear.

Starting off

When the engine is started, the transmission is in automatic mode. Depress the foot brake and move the selector lever towards **+** to engage first gear. If **R** is selected, reverse gear is engaged. The vehicle starts to move when the foot brake is released. To start off quickly, release the foot brake and accelerate immediately after engaging a gear.

In automatic mode the transmission shifts to other gears automatically, dependent on driving conditions.

To engage manual mode, move the selector lever towards **A/M**. The current gear will appear in the transmission display. To engage first gear, depress foot brake and move selector lever towards **+** or **-**. Shift to a higher or lower gear by moving selector lever to **+** or **-**. Gears can be skipped by moving the selector lever repeatedly at short intervals.

Stopping the vehicle

In automatic or manual mode, first gear is engaged and the clutch is released when the vehicle is stopped. In **R**, reverse gear remains engaged.

When stopping on gradients, engage parking brake or depress the foot brake. To prevent overheating of the clutch, an intermittent audible warning may sound as a signal to depress the foot brake or apply the parking brake.

Switch off engine if stopping for a lengthy period, e.g. in traffic jams.

When the vehicle is parked and the driver's door is opened, a warning chime will sound if neutral is not selected or the foot brake has not been depressed.

Engine braking

Automatic mode

When driving downhill, the manual transmission automated does not shift into higher gears until a fairly high engine speed has been reached. It shifts down in good time when braking.

Manual mode

To utilise the engine braking effect, select a lower gear in good time when driving downhill.

Rocking the vehicle

Rocking the vehicle is only permissible if the vehicle is stuck in sand, mud, snow or a hole. Move the selector lever between **R** and **A/M** (or between **+** and **-**) in a repeat pattern, while applying light pressure to the accelerator pedal. Do not race the engine and avoid sudden acceleration.

Parking

Apply the parking brake. The most recently engaged gear (see transmission display) remains engaged. With **N**, no gear is engaged.

When the ignition is switched off, the transmission no longer responds to movement of the selector lever.

Manual mode

If a higher gear is selected when the engine speed is too low, or a lower gear when the speed is too high, the shift is not executed. This prevents the engine from running at too low or too high an engine speed.

If engine speed is too low, the transmission automatically shifts to a lower gear.

If engine speed is too high, the transmission only switches to a higher gear via kickdown.

Electronic driving programmes

Winter mode ❄

Activate the Winter mode if you have problems starting off on a slippery road surface.

Activation

Press the ❄ button. ❄ is shown in the transmission display. The transmission switches to automatic mode and the vehicle starts off in a suitable gear.

Deactivation

The Winter mode is switched off by:

- pressing the ❄ button again,
- turning off the ignition,
- switching to manual mode.

In order to protect the transmission at extremely high clutch temperatures, an intermittent audible warning may sound. In such cases, depress the foot brake, select "N" and apply the parking brake to allow the clutch to cool down.

Laden mode kg

It is possible to use the Laden mode in both manual and automatic modes. In both cases, the gear shifting patterns are adapted automatically for carrying an increased payload.

Activation

Press the **kg** button. **kg** is shown in the transmission display. The transmission will then select optimized gear shift patterns.

Deactivation

The Laden mode is switched off by:

- pressing the **kg** button again,
- turning off the ignition.

Kickdown

If the accelerator pedal is pressed past the pressure point, the transmission shifts to a lower gear depending on engine speed. Full engine power is available for acceleration.

If engine speed is too high the transmission switches to a higher gear, even in manual mode. Without kickdown this automatic shift is not effected in manual mode.

Fault

In the event of a fault, is shown in the transmission display. Continued driving is possible provided the vehicle is driven with care and anticipation.

Have the cause of the fault remedied by a workshop.

Interruption of power supply

The clutch is not disengaged if there is an interruption of the power supply when a gear is engaged. The vehicle cannot move.

If the vehicle battery is discharged, start the vehicle using jump leads ⇨ 141.

If the cause of the fault is not a discharged vehicle battery, seek the assistance of a workshop.

If neutral cannot be selected, the vehicle must only be towed with the drive wheels raised off the ground.

Towing the vehicle ⇨ 143.

Brakes

The brake system comprises two independent brake circuits.

If a brake circuit fails, the vehicle can still be braked using the other brake circuit. However, braking effect is achieved only when you depress the brake pedal firmly. You need to use considerably more force for this. The braking distance is extended. Seek the assistance of a workshop before continuing your journey.

When the engine is not running, the support of the brake servo unit disappears once the brake pedal has been depressed once or twice. Braking effect is not reduced, but braking requires significantly greater force. It is especially important to bear this in mind when being towed.

If control indicator (!) illuminates in the instrument cluster while driving and the message **BRAKING FAULT** appears in the Driver Information Centre there is a fault in the braking system. Seek the assistance of a workshop immediately.

Control indicator (!) ⇨ 73.

Vehicle messages ⇨ 77.

Antilock brake system

Antilock brake system (ABS) prevents the wheels from locking.

ABS starts to regulate brake pressure as soon as a wheel shows a tendency to lock. The vehicle remains steerable, even during hard braking.

ABS control is made apparent through a pulse in the brake pedal and the noise of the regulation process.

For optimum braking, keep the brake pedal fully depressed throughout the braking process, despite the fact that the pedal is pulsating. Do not reduce the pressure on the pedal.

Control indicator (ABS) ⇨ 74.

Fault

If control indicator (ABS) does not go out a few seconds after the ignition is switched on, or if it illuminates while driving, there is a fault in the ABS. Control indicator ⚠ may also illuminate in the instrument cluster together with the messages **CHECK ABS** and **CHECK ESP** in the Driver Information Centre. The brake system remains operational but without ABS regulation.

> **⚠ Warning**
>
> If there is a fault in the ABS, the wheels may be liable to lock due to braking that is heavier than normal. The advantages of ABS are no longer available. During hard braking, the vehicle can no longer be steered and may swerve.

If control indicators (ABS), ⚠, (!) and STOP illuminate, the ABS and ESP are deactivated and the message **BRAKING FAULT** is shown in the Driver Information Centre. Seek the assistance of a workshop.

Have the cause of the fault remedied by a workshop.

Vehicle messages ⇨ 77.

Parking brake

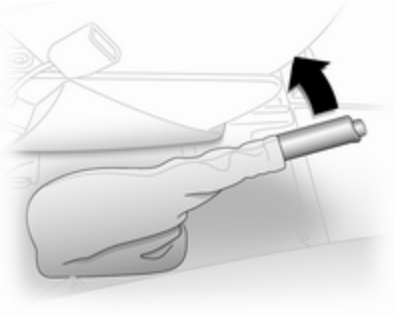

Always apply parking brake firmly without operating the release button, and apply as firmly as possible on a downhill or uphill slope.

To release the parking brake, pull the lever up slightly, press the release button and fully lower the lever.

To reduce the operating forces of the parking brake, depress the foot brake at the same time.

Control indicator ⓘ ⇨ 73.

Brake assist

If the brake pedal is depressed quickly and forcefully, maximum brake force is automatically applied (full braking).

Maintain steady pressure on the brake pedal for as long as full braking is required. Maximum brake force is automatically reduced when the brake pedal is released.

Ride control systems

Traction Control system

The Traction Control system (TC) is a component part of the Electronic Stability Program (ESP®Plus) which improves driving stability when necessary, regardless of the type of road surface or tyre grip, by preventing the drive wheels from spinning.

As soon as the drive wheels starts to spin, engine output is reduced and the wheel spinning the most is braked individually. This considerably improves the driving stability of the vehicle on slippery road surfaces.

TC is operational as soon as the ignition is switched on and control indicator extinguishes in the instrument cluster.

When TC is active flashes.

⚠ Warning

Do not let this special safety feature tempt you into taking risks when driving.

Adapt speed to the road conditions.

Control indicator ⇨ 74.

Deactivation

When spinning of the drive wheels is required TC can be deactivated:

Press the button. Control indicator illuminates in the instrument cluster and the message **ESP OFF** appears in the Driver Information Centre.

TC is reactivated by pressing the button again. Control indicator extinguishes in the instrument cluster. TC is also reactivated the next time the ignition is switched on.

When vehicle speed reaches 50 km/h the TC function will be restored automatically.

Fault

If the system detects a fault, control indicator illuminates in the instrument cluster ⇨ 73 and the message **CHECK ESP** appears in the Driver Information Centre.

Have the cause of the fault remedied by a workshop.

Vehicle messages ⇨ 77.

Electronic stability program

The Electronic Stability Program (ESP®Plus) improves driving stability when necessary, regardless of the type of road surface or tyre grip. It also prevents the drive wheels from spinning.

As soon as the vehicle starts to swerve (understeer/oversteer), engine output is reduced and the wheels are braked individually. This considerably improves the driving stability of the vehicle on slippery road surfaces.

ESP®Plus is operational as soon as the ignition is switched on and control indicator extinguishes in the instrument cluster.

When ESP®Plus comes into action flashes.

⚠Warning

Do not let this special safety feature tempt you into taking risks when driving.

Adapt speed to the road conditions.

Control indicator ⇨ 74.

Deactivation

When spinning of the drive wheels is required ESP®Plus can be deactivated:

Press the button. Control indicator illuminates in the instrument cluster and the message **ESP OFF** appears in the Driver Information Centre.

ESP®Plus is reactivated by pressing the button again. Control indicator extinguishes in the instrument cluster. ESP®Plus is also reactivated the next time the ignition is switched on.

When vehicle speed reaches 50 km/h the ESP®Plus function will be restored automatically.

Fault

If the system detects a fault, control indicator illuminates in the instrument cluster ⇨ 73 and the message **CHECK ESP** appears in the Driver Information Centre.

Have the cause of the fault remedied by a workshop.

Vehicle messages ⇨ 77.

Cruise control

The cruise control can store and maintain speeds of 30 km/h and above. Deviations from the stored speeds may occur when driving uphill or downhill.

For safety reasons the cruise control cannot be activated until the foot brake has been operated once.

Do not use the cruise control if it is not advisable to maintain a constant speed.

With manual transmission automated, only activate cruise control in automatic mode.

Control indicators and ⇨ 75.

Activation

Press switch, control indicator illuminates green in the instrument cluster.

Cruise control is now in standby mode and a corresponding message appears in the Driver Information Centre.

Accelerate to the desired speed and press switch + or −. The current speed is now stored and maintained and the accelerator pedal can be released.

Control indicator illuminates green in the instrument cluster together with and a corresponding message appears in the Driver Information Centre.

Vehicle speed can be increased by depressing the accelerator pedal. The stored speed flashes in the instrument cluster. When the accelerator pedal is released, the previously stored speed is resumed.

The speed is saved until the ignition is switched off.

Increase speed

With cruise control active, the vehicle speed can be increased continuously or in small increments by holding down or tapping switch **+** repeatedly.

When the switch is released the current speed is stored and maintained.

Alternatively, accelerate to the desired speed and store by pressing switch **+**.

Reduce speed

With cruise control active, the vehicle speed can be decreased continuously or in small increments by holding down or tapping switch **−** repeatedly.

When the switch is released the current speed is stored and maintained.

Deactivation

Press switch **O**: cruise control is deactivated and the green control indicator extinguishes in the instrument cluster.

Automatic deactivation:

- Vehicle speed drops below 30 km/h,
- The brake pedal is depressed,
- The clutch pedal is depressed,
- Selector lever in **N**.

The speed is stored and a corresponding message appears in the Driver Information Centre.

Resume stored speed

Press switch **R** at a speed above 30 km/h.

If the stored speed is much higher than the current speed, the vehicle will accelerate powerfully until the stored speed is obtained.

Deleting the stored speed

Press switch : Green control indicators and extinguish in the instrument cluster.

Cruise control speed limiter

The speed limiter prevents the vehicle exceeding a preset maximum speed above 30 km/h.

Activation

Press switch, control indicator illuminates yellow in the instrument cluster.

Cruise control speed limiter function is now in standby mode and a corresponding message appears in the Driver Information Centre.

Accelerate to the desired speed and press switch + or −. The current speed is recorded.

The vehicle can be driven normally but it will not be possible to exceed the programmed speed limit except in an emergency.

Where the limit speed cannot be maintained, e.g. when driving on a steep decline, the limit speed will flash in the Driver Information Centre.

Increase limit speed

The limit speed can be increased continuously or in small increments by holding down or tapping switch + repeatedly.

Reduce limit speed

The limit speed can be decreased continuously or in small increments by holding down or tapping switch − repeatedly.

Exceeding the limit speed

In the event of an emergency, it is possible to exceed the limit speed by depressing the accelerator pedal firmly beyond the point of resistance. The limit speed will flash in the Driver Information Centre during this period.

Release the accelerator pedal and the speed limiter function is reactivated once a speed lower than the limit speed is obtained.

Deactivation

Press switch O: Speed limiter is deactivated and the vehicle can be driven normally.

The limit speed is stored and a corresponding message appears in the Driver Information Centre.

Reactivation

Press switch R: The speed limiter function is reactivated.

Deleting the limit speed

Press switch: Yellow control indicator extinguishes in the instrument cluster.

Object detection systems

Parking assist

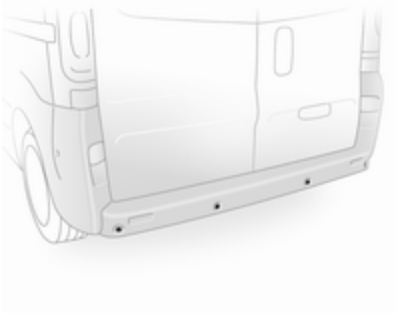

The parking assist makes reverse parking easier by measuring the distance between the rear of the vehicle and obstacles. It is the driver, however, who bears full responsibility for parking.

The system consists of four ultrasonic parking sensors in the rear bumper.

Note
Attached parts in the detection area cause system malfunction.

Activation

When reverse gear is engaged, the system switches itself on automatically. Readiness for operation is indicated by a brief acoustic alarm.

An obstacle is indicated by buzzers. The interval between the buzzers becomes shorter as the vehicle gets closer to the obstacle. When the distance is less than 30 cm, the buzzer is continuous.

⚠ Warning

Under certain circumstances, various reflective surfaces on objects or clothing as well as external noise sources may cause the system to fail to detect obstacles.

Deactivation

It is possible to permanently or temporarily deactivate the system.

Temporary deactivation
Temporarily deactivate the system by pressing the button on the instrument panel with the ignition on and reverse gear engaged. When reverse gear is selected no acoustic signal will sound, indicating deactivation.

The function is reactivated by pressing button again or the next time the ignition is switched on.

Permanent deactivation
Permanently deactivate the system by pressing and holding the button on the instrument panel for approx. 3 seconds with the ignition on and reverse gear engaged. The system is deactivated and will not operate. When reverse gear is selected no acoustic signal will sound, indicating deactivation.

The function is reactivated by pressing and holding button for approx. 3 seconds.

Fault
If the system detects an operating fault, a continuous acoustic alarm will sound for approx. 5 seconds when selecting reverse gear. Consult a workshop to have the cause of the fault remedied.

Caution

When reversing, the area should be free from obstacles which could impact on the underside of the vehicle.

Impact to the rear axle, which may not be visible, could lead to uncharacteristic changes in the vehicle handling. In the event of such an impact, consult a workshop.

Fuel

Fuel for petrol engines
Only use unleaded fuel that complies with European standard EN 228 or E DIN 51626-1 or equivalent.

Your engine is capable of running with E10 fuel that fulfills these standards. E10 fuel contains up to 10 % bioethanol.

Use fuel with the recommended octane rating ⇨ 157. Use of fuel with too low an octane rating can reduce engine power and torque and slightly increases fuel consumption.

Caution

Do not use fuel or fuel additives that contain metallic compounds such as manganese-based additives. This may cause engine damage.

Caution

Use of fuel that does not comply to EN 228 or E DIN 51626-1 or equivalent can lead to deposits or engine damage and may affect your warranty.

Caution

Use of fuel with too low an octane rating could lead to uncontrolled combustion and engine damage.

Fuel for diesel engines

Only use diesel fuel that complies with EN 590.

In countries outside the European Union use Euro-Diesel fuel with a sulphur concentration below 50 ppm.

Caution

Use of fuel that does not comply to EN 590 or similar can lead to engine powerloss, increased wear or engine damage and may affect your warranty.

Do not use marine diesel oils, heating oils, Aquazole and similar diesel-water emulsions. Diesel fuels must not be diluted with fuels for petrol engines.

Refuelling

⚠ Danger

Before refuelling, switch off engine and any external heaters with combustion chambers (identified by sticker on fuel filler flap). Switch off any mobile phones.

Follow the operating and safety instructions of the filling station when refuelling.

⚠ Danger

Fuel is flammable and explosive. No smoking. No naked flames or sparks.

If you can smell fuel in your vehicle, have the cause of this remedied immediately by a workshop.

Caution

In case of misfuelling, do not switch on ignition.

Note
To ensure the fuel level is displayed correctly, the ignition must be switched off before refuelling. Avoid minor fuel top-ups (e.g. less than 5 litres) to ensure accurate readings.

The fuel tank filler neck with bayonet cap is located on the left hand side of the vehicle.

The fuel filler flap can only be opened if the vehicle is unlocked.

To unlock and open the fuel filler cap, insert key and turn anticlockwise. When refuelling is complete, replace the filler cap and turn key clockwise as far as it will go.

Caution
Wipe off any overflowing fuel immediately.

Fault

Should an interruption to the power supply occur, central locking will not unlock the fuel filler flap. In such cases release manually.

To open

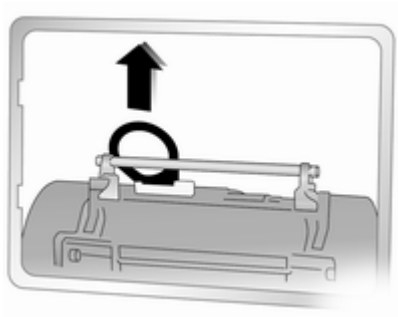

- Reposition left front seat to access the release cover.
- Remove the release cover and position the seat belt to one side.
- Raise fuel filler release to unlock the fuel filler flap.

To close

- Close the fuel filler flap and lower fuel filler release to lock the fuel filler flap.
- Replace the release cover.
- Reposition left front seat.

If the cause of the interruption to the power supply is not a discharged vehicle battery, consult a workshop.

Fuel consumption - CO_2-Emissions

The fuel consumption (combined) of the Opel Vivaro is within a range of 8.0 to 6.5 l/100 km.

The CO_2 emission (combined) is within a range of 210 to 171 g/km.

For the values specific to your vehicle, refer to the EEC Certificate of Conformity provided with your vehicle or other national registration documents.

General information

The official fuel consumption and specific CO_2 emission figures quoted relate to the EU base model with standard equipment.

Fuel consumption data and CO_2 emission data are determined according to regulation R (EC) No. 715/2007 (in the applicable version), taking into consideration the vehicle weight in running order, as specified by the regulation.

The figures are provided only for the purpose of comparison between different vehicle variants and must not be taken as a guarantee for the actual fuel consumption of a particular vehicle.

Additional equipment may result in slightly higher results than the stated fuel consumption and CO_2 figures.

Furthermore, fuel consumption is dependent on personal driving style as well as road and traffic conditions.

Trailer hitch

General information

Entrust retrofitting of towing equipment to a workshop. It may be necessary to make changes that affect the cooling system, heat shields or other equipment. Only use towing equipment that has been approved for your vehicle.

Driving characteristics and towing tips

In the case of trailers with brakes, attach the breakaway stopping cable.

Before attaching a trailer, lubricate the coupling ball. However, do not do so if a stabiliser, which acts on the coupling ball, is being used to reduce snaking movements. For trailers with low driving stability the use of a stabiliser is recommended.

A maximum speed of 80 km/h must not be exceeded, even in countries where higher speeds are permitted.

If the trailer starts snaking, drive more slowly, do not attempt to correct the steering and brake sharply if necessary.

When driving downhill, drive in the same gear as if driving uphill and drive at a similar speed.

Adjust tyre pressure to the value specified for full load ⇨ 166.

Trailer towing

Trailer loads

The permissible trailer loads are vehicle and engine-dependent maximum values which must not be exceeded. The actual trailer load is the difference between the actual gross weight of the trailer and the actual coupling socket load with the trailer coupled.

The permissible trailer loads are specified in the vehicle documents. In general, they are valid for gradients up to max. 12 %.

The permitted trailer load applies up to the specified incline and up to an altitude of 1000 metres above sea level. Since engine power decreases as altitude increases due to the air becoming thinner, therefore reducing climbing ability, the permissible gross train weight also decreases by 10 % for every 1000 metres of additional altitude. The gross train weight does not have to be reduced when driving on roads with slight inclines (less than 8 %, e.g. motorways).

The permissible gross train weight must not be exceeded. This weight is specified on the identification plate ⇨ 153.

Vertical coupling load

The vertical coupling load is the load exerted by the trailer on the coupling ball. It can be varied by changing the weight distribution when loading the trailer.

The maximum permissible vertical coupling load is specified on the towing equipment identification plate and in the vehicle documents. Always aim for the maximum load, especially in the case of heavy trailers. The vertical coupling load should never fall below 25 kg.

In the case of trailer loads of 1200 kg or more, the vertical coupling load should not be less than 50 kg.

Rear axle load

When the trailer is coupled and the towing vehicle fully loaded (including all occupants), the permissible rear axle load (see identification plate or vehicle documents) must not be exceeded.

Towing equipment

Caution
When operating without a trailer, remove the coupling ball bar.

⚠Warning

Towing a trailer is permitted only when a coupling ball bar is fitted correctly. If the coupling ball bar does not engage correctly, seek the assistance of a workshop.

Towing equipment audible warning

For vehicles fitted with towing equipment, when connected to a trailer the pitch of the audible warning changes upon operation of the turn signals.

The pitch of the audible warning will also change if a turn signal light on the trailer or the towing vehicle fails.

Vehicle care

General Information 117
Vehicle checks 118
Bulb replacement 126
Electrical system 130
Vehicle tools 133
Wheels and tyres 133
Towing 143
Appearance care 145

General Information

Accessories and vehicle modifications

We recommend the use of Genuine Parts and Accessories and factory approved parts specific for your vehicle type. We cannot assess or guarantee reliability of other products - even if they have a regulatory or otherwise granted approval.

Do not make any modifications to the electrical system, e.g. changes of electronic control units (chip tuning).

Vehicle storage

Storage for a long period of time

If the vehicle is to be stored for several months:

- Wash and wax the vehicle.
- Have the wax in the engine compartment and underbody checked.
- Clean and preserve rubber seals.
- Fill up fuel tank completely.
- Change the engine oil.
- Drain the washer fluid reservoir.
- Check the coolant antifreeze and corrosion protection.
- Adjust tyre pressure to the value specified for full load.
- Park vehicle in a dry, well ventilated place. Engage first or reverse gear. Prevent the vehicle from rolling.
- Do not apply the parking brake.
- Open the bonnet, close all doors and lock the vehicle.
- Disconnect the clamp from the negative terminal of the vehicle battery. Beware that all systems are not functional, e.g. anti-theft alarm system.

Putting back into operation

When the vehicle is to be put back into operation:

- Connect the clamp to the negative terminal of the vehicle battery. Activate the electronics of the power windows.
- Check tyre pressure.

- Fill up the washer fluid reservoir.
- Check the engine oil level.
- Check the coolant level.
- Fit the number plate, if necessary.

End-of-life vehicle recovery

Information on end-of-life vehicle recovery centres and the recycling of end-of-life vehicles is available on our website. Only entrust this work to an authorised recycling centre.

Vehicle checks

Performing work

⚠ Warning

Only perform engine compartment checks when the ignition is off.

The cooling fan may start operating even if the ignition is off.

⚠ Danger

The ignition system generates extremely high voltages. Do not touch.

The caps for topping up the engine oil, the coolant, the washer fluid and the oil dipstick handle are yellow for ease of identification.

Bonnet

Opening

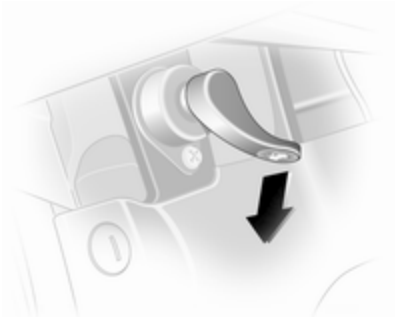

Pull the release lever and return it to its original position.

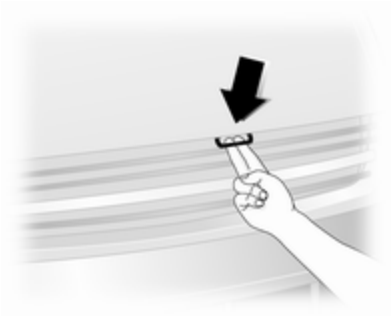

Pull the safety catch and open the bonnet.

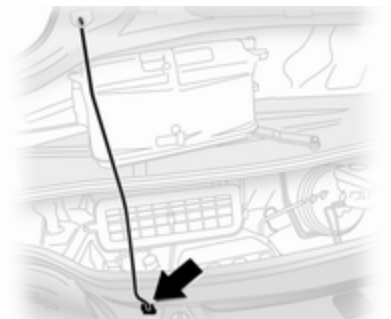

Secure the bonnet support.

Closing

Before closing the bonnet, press the support into the holder.

Lower the bonnet and allow it to drop into the catch. Check that the bonnet is engaged.

Engine oil

Check the engine oil level manually on a regular basis to prevent damage to the engine.

Ensure that the correct specification of oil is used. Recommended fluids and lubricants ⇨ 150.

Check with the vehicle on a level surface. The engine must be at operating temperature and switched off for at least 10 minutes.

Pull out the dipstick, wipe it clean, insert it to the stop on the handle, pull out and read the engine oil level.

Caution

It is the owner's responsibility to maintain the proper level of an appropriate quality oil in the engine.

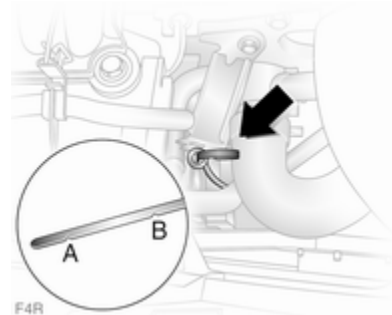

Different dipsticks are used depending on engine variant. The illustrations show checking and replenishing the engine oil in the petrol and diesel engines respectively.

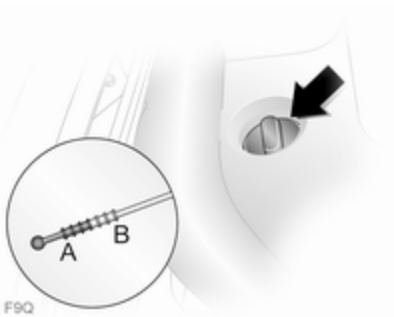

On F9Q engines, the dipstick is mounted on the oil filler cap which must be rotated anticlockwise to open.

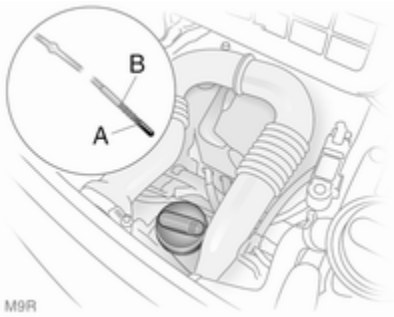

For M9R engines, rotate cap anticlockwise, remove the dipstick, wipe it clean and re-insert it as far as it will go.

When the engine oil level has dropped to the "add oil" mark **A**, top up engine oil.

Caution
Do not allow the engine oil level to drop below the minimum level!

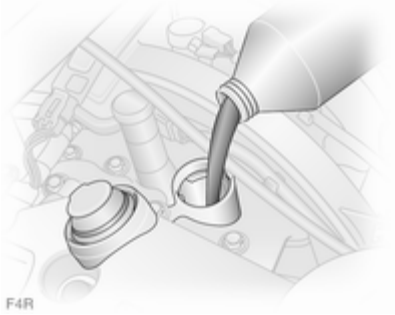

We recommend the use of the same type of engine oil that was used at the last change.

The engine oil level must not exceed the maximum mark **B** on the dipstick.

Caution
Overfilled engine oil must be drained or suctioned out.

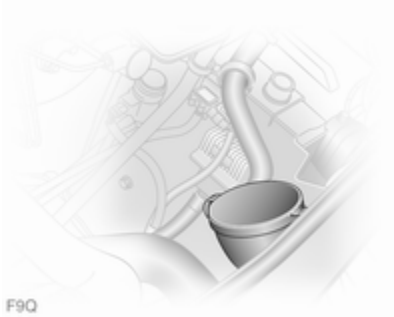

To prevent spillage when replenishing the engine oil on F9Q engines, use the funnel stored in the front of the engine compartment.

To release the funnel, raise the plastic catch on the funnel and lift upwards.

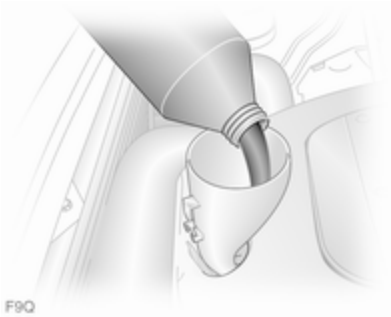

Remove the caps and ensure funnel is securely located onto the filler pipe.

Ensure the funnel is replaced securely together with both end caps fitted.

A stabilization of the engine oil consumption will not take place until the vehicle has been driven several thousand kilometres. Only then can the actual degree of consumption be established.

If consumption exceeds more than 0.5 litres every 1000 km after this running-in period, consult a workshop.

Capacities ⇨ 165, Engine oil level monitor ⇨ 69.

Fit the cap on straight and tighten it.

Engine air filter

Engine air flow indicator

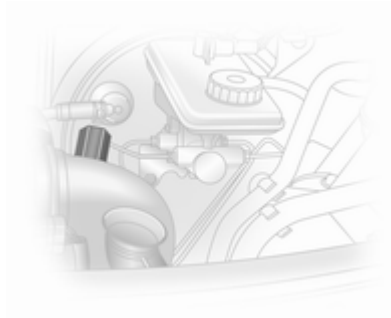

On certain models, an indicator is located in the engine induction system and indicates if the air-intake to the engine is restricted.

Clear	=	No restriction
Red tell-tale	=	Restricted

If the red tell-tale is displayed when the engine is running, consult a workshop.

Engine coolant

The coolant provides freeze protection down to approx. -28 °C.

Caution
Only use approved antifreeze.

Coolant level

Caution
Too low a coolant level can cause engine damage.

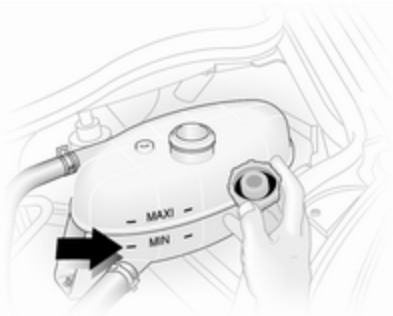

If the cooling system is cold, the coolant level should be just above the **MIN** mark. Top up if the level is low.

⚠Warning
Allow the engine to cool before opening the cap. Carefully open the cap, relieving the pressure slowly.

Top up with antifreeze. If no antifreeze is available, use clean tap water or distilled water. Install the cap tightly. Have the antifreeze concentration checked and have the cause of the coolant loss remedied by a workshop.

If a substantial amount of coolant is required, it will be necessary to bleed any trapped air from the cooling system. Seek the assistance of a workshop.

If the coolant temperature is too high, control indicator illuminates red in the instrument cluster, together with STOP ⇨ 74. Consult a workshop if coolant level is sufficient.

Power steering fluid

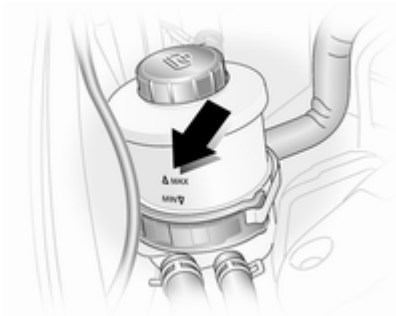

If the fluid level in the reservoir falls below the **MIN** mark consult a workshop.

Washer fluid

Fill with clean water mixed with a suitable quantity of windscreen washer fluid which contains antifreeze.

Caution

Only washer fluid with a sufficient antifreeze concentration provides protection at low temperatures or a sudden drop in temperature.

Brakes

A squealing noise indicates that the brake lining is at its minimum thickness. Continued driving is possible but have the brake lining replaced as soon as possible.

Once new brake linings are installed, do not brake unnecessarily hard for the first few journeys.

Brake fluid

⚠Warning

Brake fluid is poisonous and corrosive. Avoid contact with eyes, skin, fabrics and painted surfaces.

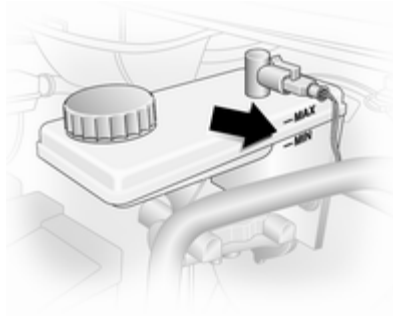

The brake fluid level must be between the **MIN** and **MAX** marks.

When topping up, ensure maximum cleanliness as contamination of the brake fluid can lead to brake system malfunctions. Have the cause of the loss of brake fluid remedied by a workshop.

Only use high-performance brake fluid approved for your vehicle.

Brake and clutch fluid ⇨ 150.

Vehicle battery

The vehicle battery is maintenance-free provided that the driving profile allows sufficient charging of the battery. Short-distance driving and frequent engine starts can discharge the battery. Avoid the use of unnecessary electrical consumers.

Batteries do not belong in household waste. They must be disposed of at an appropriate recycling collection point.

Laying up the vehicle for more than 4 weeks can lead to battery discharge. Disconnect the clamp from the negative terminal of the vehicle battery.

Ensure the ignition is switched off before connecting or disconnecting the vehicle battery.

Battery access

The vehicle battery is located beneath the front left hand seat floor panel ⇨ 141.

Warning label

Meaning of symbols:

- No sparks, naked flames or smoking.
- Always shield eyes. Explosive gases can cause blindness or injury.
- Keep the vehicle battery out of reach of children.
- The vehicle battery contains sulfuric acid which could cause blindness or serious burn injuries.
- See the Owner's Manual for further information.
- Explosive gas may be present in the vicinity of the battery.

Vehicle battery maintenance

⚠ Danger

Ensure adequate ventilation when charging the battery. There is a risk of explosion if gases generated during charging are allowed to accumulate!

Replacing the vehicle battery

When the vehicle battery is being replaced, please ensure that there are no open ventilation holes in the vicinity of the positive terminal. If a ventilation hole is open in this area, it must be closed off with a dummy cap, and the ventilation in the vicinity of the negative terminal must be opened.

We recommend that you have the vehicle battery replaced by a workshop.

Additional battery

Depending on the vehicle's auxiliary equipment certain models may have an additional battery located next to the vehicle battery.

Diesel fuel filter

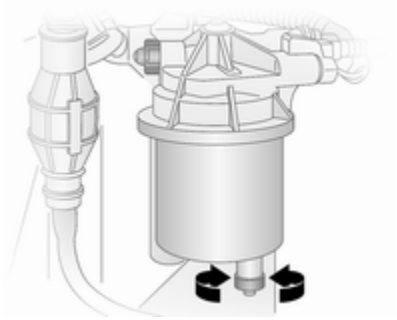

Drain diesel fuel filter of residual water at every engine oil change.

Place a container underneath the filter housing. Loosen the knurled screws on the filter cover and on the lower part of the filter by approx. one turn, to drain off the water.

The filter is drained as soon as diesel fuel emerges from the knurled screw at the bottom. Retighten the two screws.

Check diesel fuel filter at shorter intervals if the vehicle is subjected to extreme operating conditions.

Diesel fuel system bleeding

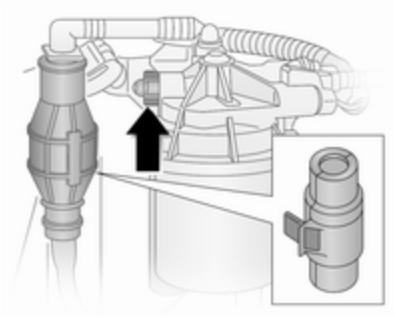

If the fuel tank has been run dry, it will be necessary to air vent or bleed the diesel fuel system.

Fill the tank with fuel and proceed as follows:

1. Remove the protective cover from the in-line supply pump.
2. Place a suitable container underneath the fuel filter vent screw to collect fuel.
3. Loosen the vent screw (arrowed) by one turn.
4. Manually operate the in-line supply pump slowly and steadily until fuel discharging from the loosened vent screw is free of air bubbles.
5. Retighten the vent screw.
6. Refit the protective cover to the in-line supply pump.

Wiper blade replacement

Wiper blades on the windscreen

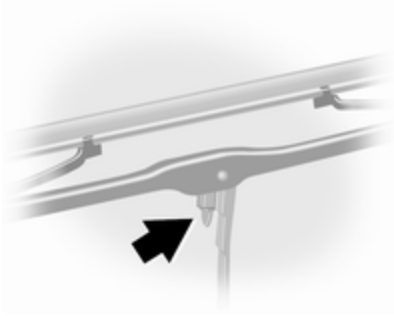

Lift wiper arm, press retaining clip towards wiper arm and detach wiper blade.

Wiper blade on the rear window

Lift wiper arm, rotate wiper blade and detach.

Bulb replacement

Switch off the ignition and turn off the relevant switch or close the doors.

Only hold a new bulb at the base. Do not touch the bulb glass with bare hands.

Use only the same bulb type for replacement.

Headlights

Low beam and high beam

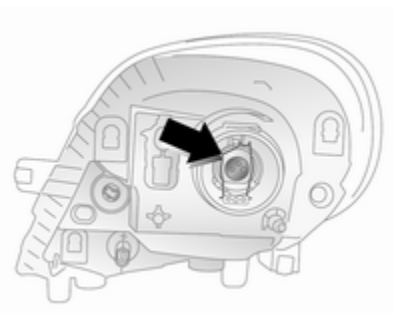

1. Remove harness connector.
2. Remove rubber seal.
3. Release retaining clip and remove bulb.
4. Renew bulb and install retaining clip ensuring that bulb is in correct orientation.
5. Install rubber seal and harness connector.

Sidelights

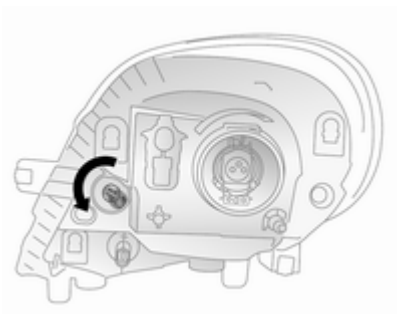

1. Remove bulb holder from reflector housing by rotating through 90°.
2. Renew bulb.
3. Install bulb holder in reflector housing.

Fog lights

Have bulbs replaced by a workshop.

Front turn signal lights

1. Remove bulb holder from reflector housing by rotating through 90°.
2. Renew bulb.
3. Install bulb holder in reflector housing.

Tail lights

Rear brake, turn signal and tail lights

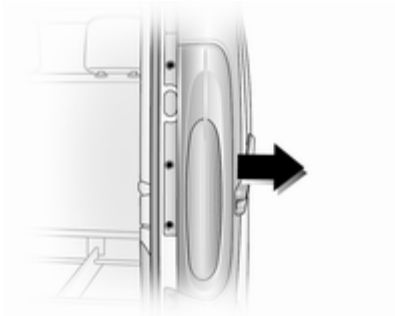

1. Remove 3 screws (using the tool supplied).
2. Carefully pull lamp assembly from retaining pins on the outer side and remove.

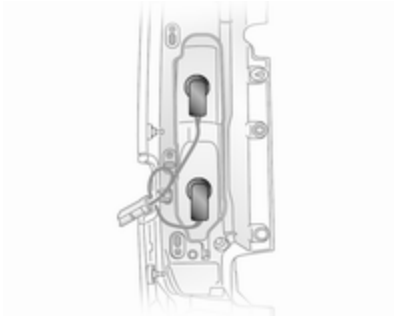

3. Twist bulb holder to separate from lamp assembly.
4. Renew bulb.
5. Push to install the bulb holder into the lamp assembly - then twist to secure.
6. Check that the wiring harness is located correctly.
7. Replace lamp assembly into original position, ensuring that it is seated correctly.
8. Fit lamp assembly onto retaining pins and replace 3 screws.

Side turn signal lights

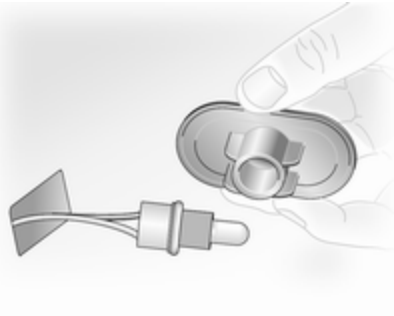

1. Release clips from wing using a flat blade screwdriver and lift out lamp assembly from aperture.
2. Remove bulb holder from lamp assembly by rotating through 90° and renew bulb.
3. Install bulb holder in lamp assembly and install lamp assembly into aperture.

Centre high-mounted brake light

Have bulbs replaced by a workshop.

Reversing light

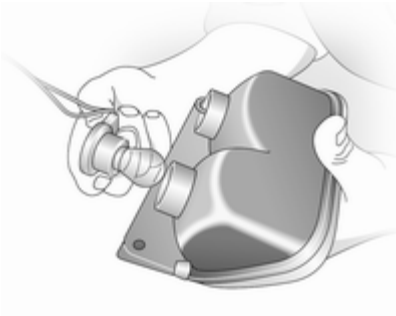

1. Remove 2 screws (using the tool supplied) and remove lamp assembly.
2. Twist bulb housing to separate from lamp assembly.
3. Renew bulb.
4. Push to install the bulb holder into the lamp assembly - then twist to secure.
5. Install lamp assembly with 2 screws.

Number plate light

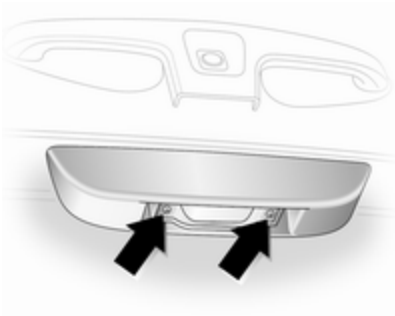

1. Remove 2 screws (arrowed) and remove lens.
2. Renew bulb.
3. Re-install lens and replace screws.

Fog tail light

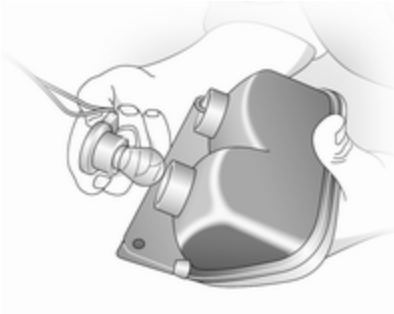

1. Remove 2 screws (using the tool supplied) and remove lamp assembly.
2. Twist bulb housing to separate from lamp assembly.
3. Renew bulb.
4. Push to install the bulb holder into the lamp assembly - then twist to secure.
5. Install lamp assembly with 2 screws.

Interior lights

Front courtesy light

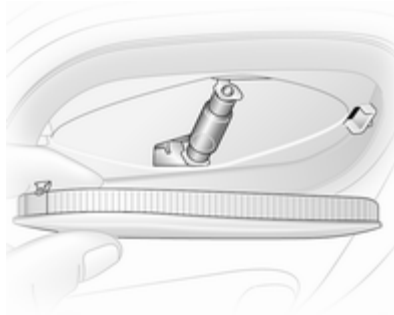

1. Remove lens using a flat blade screwdriver.
2. Renew bulb.
3. Reinstall lens assembly.

Load compartment light

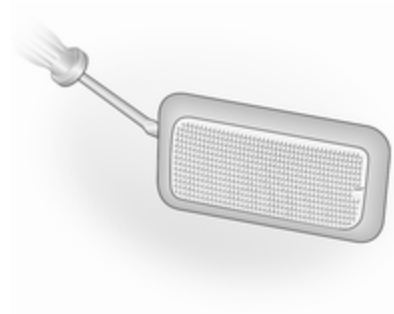

1. Remove lamp assembly using a flat blade screwdriver.
2. Gain access to bulb by removing rear cover on lamp assembly.
3. Renew bulb and install rear cover.
4. Reinstall lamp assembly.

Rear courtesy lights

Have bulbs replaced by a workshop.

Glovebox light

Have bulbs replaced by a workshop.

Instrument panel illumination

Have bulbs replaced by a workshop.

Electrical system

Fuses

Data on the replacement fuse must match the data on the defective fuse.

The fuse box is located on the left-hand side of the instrument panel, below the cupholder.

Before replacing a fuse, turn off the respective switch and the ignition.

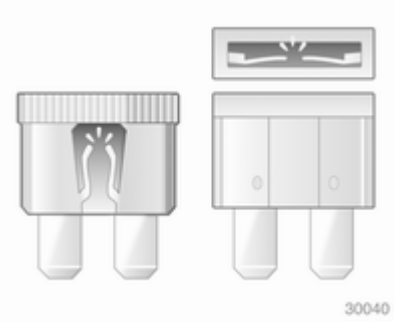

A blown fuse can be recognised by its melted wire. Do not replace the fuse until the cause of the fault has been remedied.

It is advisable to carry a full set of fuses. Provision is made in the fuse box for the storing of spare fuses.

Some functions are protected by several fuses.

Fuses may also be inserted without existence of a function.

Fuse extractor

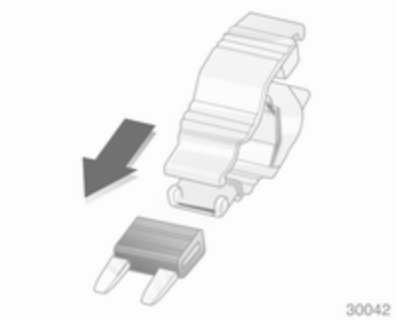

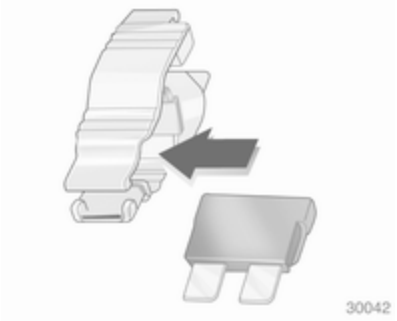

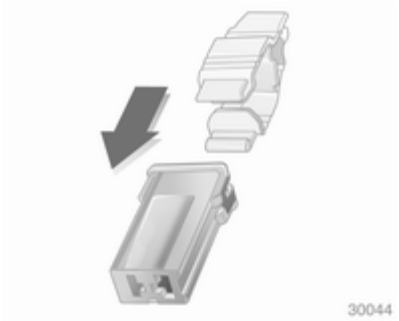

To help in replacing fuses, a fuse extractor is located in the fuse box.

Place the fuse extractor on the various types of fuse from the top or side, and withdraw fuse.

Instrument panel fuse box

Located on the left-hand side of the instrument panel, below the cupholder.

Remove the ashtray from the left-hand cup holder and pull open the fuse box cover. Do not store any objects behind the cover.

Some circuits may be protected by several fuses.

Symbol	Application
	Air conditioning
	Heated exterior mirrors
	Heated front seats
	Power windows
	Left-hand high beam
	Right-hand high beam
	Windscreen wiper
	Radio, Infotainment system
	Cigarette lighter
Boiler	Rear passenger compartment heater
	Horn
	Left-hand low beam
	Right-hand low beam
	Instrument panel
	Heating
	Interior lamp

Symbol	Application
ABS	Antilock brake system
	Heated rear windows
	Clock, interior lights, radio, Infotainment system
UCH INJ	Fuel injection system
	Rear window washer
	Rear widow wiper
	Left-hand sidelight
	Right-hand sidelight
	Central locking
	Electrically adjustable exterior mirrors
STOP	Stop control indicator, daytime running lights
	Rear fog lights
	Front fog lights

Symbol	Application
	Power outlet
T	Tachograph

Vehicle tools

Tools

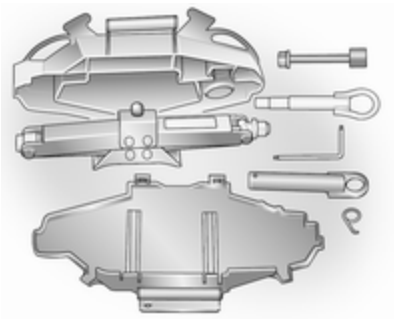

The jack, adapters, ratchet, torx key, hub cap hook, towing eye and spare wheel security tool are contained in a unit, stowed under the driver's seat.

Spare wheel ⇨ 140.

Vehicles with a tyre repair kit: The towing eye and torx key are stored within the tyre repair kit case, stowed under the front seat.

Tyre repair kit ⇨ 135.

Wheels and tyres

Tyre condition, wheel condition

Drive over edges slowly and at right angles if possible. Driving over sharp edges can cause tyre and wheel damage. Do not trap tyres on the kerb when parking.

Regularly check the wheels for damage. Seek the assistance of a workshop in the event of damage or unusual wear.

Tyres

Factory-fitted tyres are matched to the chassis and offer optimum driving comfort and safety.

Winter tyres

Winter tyres improve driving safety at temperatures below 7 °C and should therefore be fitted on all wheels.

In accordance with country-specific regulations, a notice indicating the maximum permissible speed for the tyres must be affixed within the driver's field of vision.

Tyre designations

E.g. **195/65 R 16 C 88 Q**

195 = Tyre width, mm
65 = Cross-section ratio (tyre height to tyre width), %
R = Belt type: Radial
RF = Type: RunFlat
16 = Wheel diameter, inches
C = Cargo or commercial use
88 = Load index e.g. 88 is equivalent to 567 kg
Q = Speed code letter

Speed code letter:

Q = up to 160 km/h
S = up to 180 km/h
T = up to 190 km/h
H = up to 210 km/h
V = up to 240 km/h
W = up to 270 km/h

Tyre pressure

Check the pressure of cold tyres at least every 14 days and before any long journey. Do not forget the spare wheel.

Tyre pressures ⇨ 166.

The tyre pressure data refers to cold tyres. It applies to summer and winter tyres.

Always inflate the spare tyre to the pressure specified for full load.

Incorrect tyre pressures will impair safety, vehicle handling, comfort and fuel economy and will increase tyre wear.

The tyre pressure tables show all possible tyre combinations ⇨ 166.

For the tyres approved for your vehicle, refer to the EEC Certificate of Conformity provided with your vehicle or other national registration documents.

The driver is responsible for correct adjustment of tyre pressure.

⚠ Warning

If the pressure is too low, this can result in considerable tyre warm-up and internal damage, leading to tread separation and even to tyre blow-out at high speeds.

Tread depth

Check tread depth at regular intervals.

Tyres should be replaced for safety reasons at a tread depth of 2-3 mm (4 mm for winter tyres).

For safety reasons it is recommended that the tread depth of the tyres on one axle should not vary by more than 2 mm.

The legally permissible minimum tread depth (1.6 mm) has been reached when the tread has worn down as far as one of the tread wear indicators (TWI). Their position is indicated by markings on the sidewall.

If there is more wear at the front than the rear, swap round front wheels and rear wheels. Ensure that the direction of rotation of the wheels is the same as before.

Tyres age, even if they are not used. We recommend tyre replacement every 6 years.

Changing tyre and wheel size

If tyres of a different size than those fitted at the factory are used, it may be necessary to reprogramme the speedometer as well as the nominal tyre pressure and make other vehicle modifications.

⚠Warning

Use of unsuitable tyres or wheels may lead to accidents and will invalidate the vehicle type approval.

Wheel covers

Wheel covers and tyres that are factory approved for the respective vehicle and comply with all of the relevant wheel and tyre combination requirements must be used.

If the wheel covers and tyres used are not factory approved, the tyres must not have a rim protection ridge.

Wheel covers must not impair brake cooling.

⚠Warning

Use of unsuitable tyres or wheel covers could lead to sudden pressure loss and thereby accidents.

Tyre chains

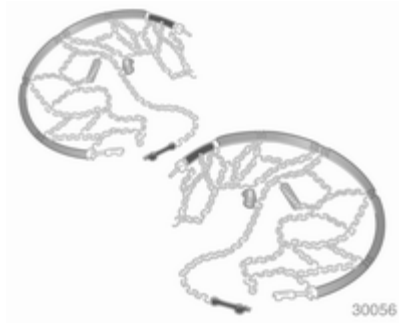

Tyre chains are only permitted on the front wheels.

Always use fine mesh chains that add no more than 15 mm to the tyre tread and the inboard sides (including chain lock).

For tyre size 215/65 R16, consult a workshop.

⚠Warning

Damage may lead to tyre blowout.

Wheel covers on steel wheels may come into contact with parts of the chains. In such cases, remove the wheel covers.

Tyre chains may only be used at speeds up to 50 km/h and, when travelling on roads that are free of snow, they may only be used for brief periods since they are subject to rapid wear on a hard road and may snap.

Tyre repair kit

Minor damage to the tyre tread or sidewall can be repaired with the tyre repair kit.

Do not remove foreign bodies from the tyres.

Tyre damage exceeding 4 mm or that is at tyre sidewall near the rim cannot be repaired with the tyre repair kit.

⚠Warning

Do not drive faster than 80 km/h.

Do not use for a lengthy period.

Steering and handling may be affected.

If the vehicle has a flat tyre:

Apply the parking brake and engage first gear or reverse gear.

The tyre repair kit is located under the front seat.

1. Remove the compressor from the tyre repair kit.
2. Remove the electrical connection cable and air hose from the compartments on the underside of the compressor.

3. Screw the compressor air hose to the connection on the sealant bottle.
4. Fit the sealant bottle into the retainer on the compressor.

   Set the compressor near the tyre in such a way that the sealant bottle is upright.
5. Unscrew valve cap from defective tyre.

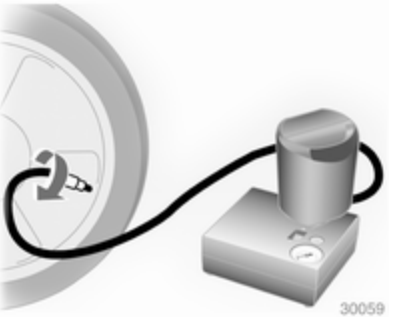

6. Screw the filler hose to the tyre valve.
7. The switch on the compressor must be set to **O**.
8. Connect the compressor plug to the power outlet or cigarette lighter socket.

   To avoid discharging the vehicle battery, we recommend running the engine.

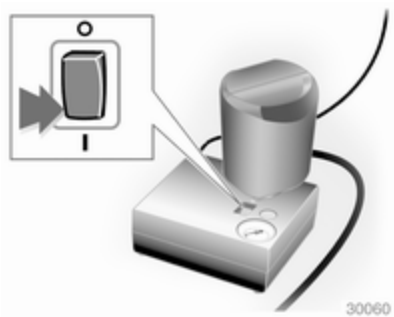

9. Set the rocker switch on the compressor to I. The tyre is filled with sealant.
10. The compressor pressure gauge briefly indicates up to 6 bar (600 kPa/87 psi). Then the pressure starts to drop.
11. All of the sealant is pumped into the tyre. Then the tyre is inflated.

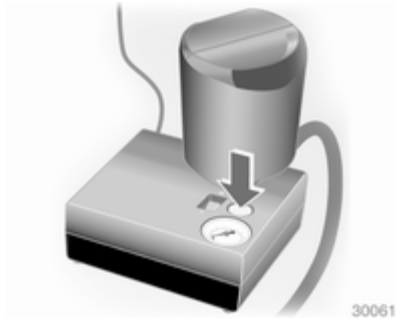

12. The prescribed tyre pressure should be obtained within 10 minutes. Tyre pressure ⇨ 166. When the correct pressure is obtained, switch off the compressor.

    If the prescribed tyre pressure is not obtained within 10 minutes, remove the tyre repair kit. Move the vehicle one tyre rotation (approx. 2 metres). Reattach the tyre repair kit and continue the filling procedure for 10 minutes. If the prescribed tyre pressure is still not obtained, the tyre is too badly damaged. Seek the assistance of a workshop.

    Drain excess tyre pressure with the button above the pressure indicator.

    Do not run the compressor for longer than 10 minutes.
13. Detach the tyre repair kit. Screw the tyre inflation hose to the free connection on the sealant bottle. This prevents sealant from escaping. Stow tyre repair kit under the front seat.
14. Remove any excess sealant using a cloth.
15. Take the label indicating maximum permitted speed from the tyre repair kit and affix in the driver's field of view.

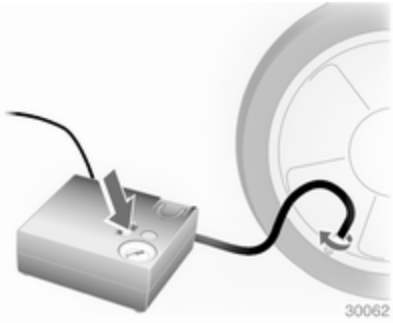

16. Continue driving immediately so that the sealant is evenly distributed throughout the tyre. After driving approx. 10 km, but no more than 10 minutes, stop and check tyre pressure using the compressor. Screw compressor air hose directly onto tyre valve and compressor when doing this.
17. If the tyre pressure is more than 3.1 bar (310 kPa/45 psi), set it to the correct value. Repeat the procedure until there is no more loss of pressure.

    If the tyre pressure has fallen below 3.1 bar (310 kPa/45 psi), the vehicle must not be driven. Seek the assistance of a workshop.
18. Stow tyre repair kit under the front seat.

⚠ Warning

Do not allow the sealant to contact skin, eyes or clothing. If swallowed seek medical assistance immediately.

Note
The driving characteristics of the repaired tyre is severely affected, therefore have this tyre replaced.

If unusual noise is heard or the compressor becomes hot, turn compressor off for at least 30 minutes.

The built-in safety valve opens at a pressure of 7 bar.

Note the expiry date of the kit. After this date its sealing capability is no longer guaranteed. Pay attention to storage information on sealant bottle.

Replace the used sealant bottle. Dispose of the bottle as prescribed by applicable laws.

The compressor and sealant can be used from approx. -30 °C.

The adapters supplied can be used to pump up other items e.g. footballs, air mattresses, inflatable dinghies etc. They are located on the underside of the compressor. To remove, screw on compressor air hose and withdraw adapter.

Wheel changing

Some vehicles are equipped with a tyre repair kit instead of a spare wheel ⇨ 135.

Make the following preparations and observe the following information:

- Park the vehicle on a level, firm and non-slippery surface. The front wheels must be in the straight-ahead position.
- Apply the parking brake and engage first gear or reverse gear.
- Remove the spare wheel ⇨ 140.

- Never change more than one wheel at a time.
- Use the jack only to change wheels in case of puncture, not for a seasonal winter or summer tyre change.
- If the ground on which the vehicle is standing is soft, a solid board (max. 1 cm thick) should be placed under the jack.
- No people or animals may be in the vehicle when it is jacked-up.
- Never crawl under a jacked-up vehicle.
- Do not start the engine when the vehicle is raised on the jack.

1. Pull off the wheel cover ⇨ 133.

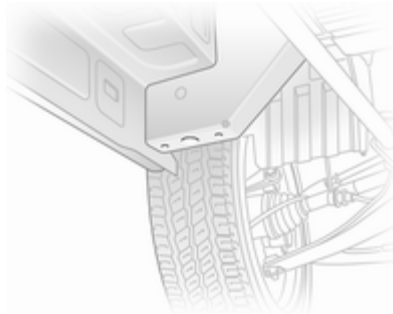

2. Loosen each of the wheel bolts by half a turn using the ratchet and adapter. The ratchet should turn anticlockwise to loosen the bolts. Invert the ratchet if necessary.

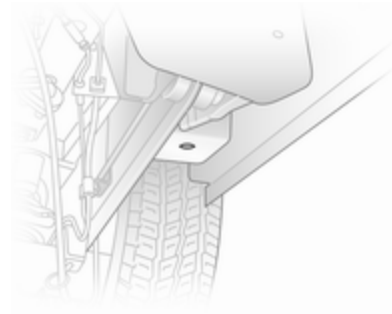

3. Raise vehicle by placing lifting pad spigot of the jack under the jacking hole located nearest the wheel concerned.

   Ensure the jack is positioned correctly. The jack base must be on the ground directly below the jacking hole in a manner that prevents it from slipping.
4. Install adapter onto the jack and raise the vehicle by turning the ratchet until the wheel is clear of the ground.
5. Unscrew wheel bolts completely by turning anticlockwise and wipe clean with a cloth.

Put wheel bolts somewhere where the threads will not be soiled.

6. Change the wheel.
7. Screw in the wheel bolts.
8. Lower vehicle.
9. Tighten each wheel bolt in a crosswise sequence. Tightening torque is 140 Nm.
10. Refit wheel cover
11. Change the wheel.
12. Stow the replaced wheel ⇨ 140 and the vehicle tools ⇨ 133.
13. Have the new wheel balanced on the vehicle. Check the tyre pressure of the installed tyre ⇨ 166 and also the wheel bolt torque as soon as possible.

Have the defective tyre renewed or repaired.

Spare wheel

Some vehicles are equipped with a tyre repair kit instead of a spare wheel ⇨ 135.

Use of a spare wheel that is smaller than the other wheels or together with winter tyres could affect driveability. Have the defective tyre replaced as soon as possible.

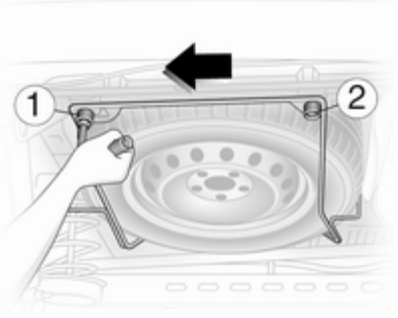

The spare wheel is mounted under the rear underbody and may be secured using a security bolt that can only be removed using the tool supplied.

⚠ Warning

Due to the weight of the tyre assembly, exercise caution when releasing the spare wheel carrier. Do not fully remove bolt **1**.

Support the spare wheel with a suitable object to prevent the wheel falling suddenly when loosening the carrier bolts - risk of injury!

It may be necessary to jack the vehicle up to gain access to the spare wheel on a fully loaded vehicle with a flat rear tyre.

To release the spare wheel carrier, loosen bolt **1**, ensuring it is not fully removed. Fully remove bolt **2**, then pull the carrier to the left, until it clears bolt **1**, and lower the carrier assembly.

When installing the wheel ensure that the spare wheel carrier is correctly positioned before tightening the bolts.

Summer and winter tyres

If you use winter tyres, the spare wheel may still be fitted with a summer tyre.

If you use the spare wheel when it is fitted with a summer tyre the vehicle's driveability may be affected, especially on slippery road surfaces.

Directional tyres

Fit directional tyres such that they roll in the direction of travel. The rolling direction is indicated by a symbol (e.g. an arrow) on the sidewall.

The following applies to tyres fitted opposing the rolling direction:

- Driveability may be affected. Have the defective tyre renewed or repaired as soon as possible.
- Do not drive faster than 80 km/h.
- Drive particularly carefully on wet and snow-covered road surfaces.

Jump starting

Do not start with a quick charger.

A vehicle with a discharged battery can be started using jump leads and the vehicle battery of another vehicle.

⚠ Warning

Be extremely careful when starting with jump leads. Any deviation from the following instructions can lead to injuries or damage caused by battery explosion or damage to the electrical systems of both vehicles.

⚠ Warning

Avoid contact of the battery with eyes, skin, fabrics and painted surfaces. The fluid contains sulphuric acid which can cause injuries and damage in the event of direct contact.

- Never expose the battery to naked flames or sparks.
- A discharged vehicle battery can already freeze at a temperature of 0 °C. Defrost the frozen battery before connecting jump leads.
- Wear eye protection and protective clothing when handling a battery.
- Use a booster battery with the same voltage (12 volts). Its capacity (Ah) must not be much less than that of the discharged battery.
- Use jump leads with insulated terminals and a cross section of at least 16 mm^2 (25 mm^2 for diesel engines).
- Do not disconnect the discharged vehicle battery from the vehicle.
- Switch off all unnecessary electrical consumers.
- Do not lean over the battery during jump starting.
- Do not allow the terminals of one lead to touch those of the other lead.

- The vehicles must not come into contact with each other during the jump starting process.
- Apply the parking brake, transmission in neutral.

Battery access

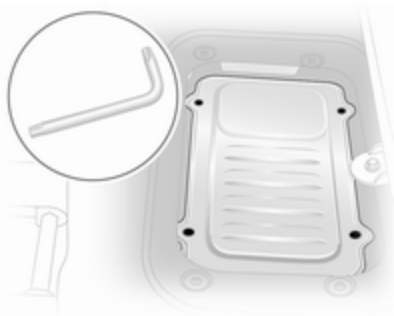

The battery is located beneath the front left hand seat floor panel. Lift the floor covering and use the tool supplied in the tool kit (or the tyre repair kit) to loosen the 4 screws.

Note the position of the arrow facing forwards on the battery cover when replacing.

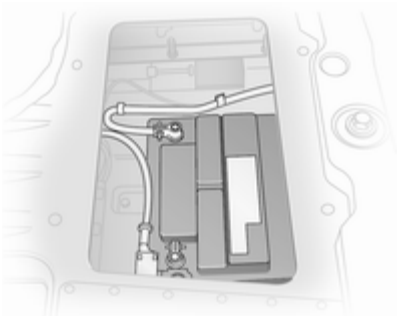

- Remove cover plate to access the battery.
- Open the positive terminal protection caps of both vehicle batteries.

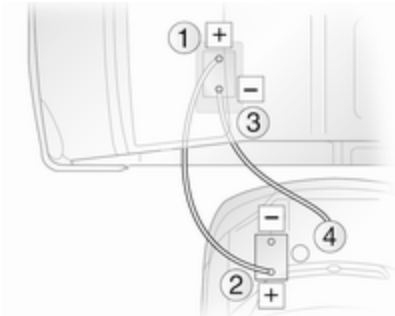

Lead connection order:

1. Connect the red lead to the positive terminal of the booster battery.
2. Connect the other end of the red lead to the positive terminal of the discharged battery.
3. Connect the black lead to the negative terminal of the booster battery.
4. Connect the other end of the black lead to a vehicle grounding point, such as the engine block or an engine mounting bolt. Connect as

far away from the discharged vehicle battery as possible, however at least 60 cm.

Route the leads so that they cannot catch on rotating parts in the engine compartment.

To start the engine:

1. Start the engine of the vehicle providing the jump start.
2. After 5 minutes, start the other engine. Start attempts should be made for no longer than 15 seconds at an interval of 1 minute.
3. Allow both engines to idle for approx. 3 minutes with the leads connected.
4. Switch on electrical consumers (e.g. headlights, heated rear window) of the vehicle receiving the jump start.
5. Reverse above sequence exactly when removing leads.

Towing

Towing the vehicle

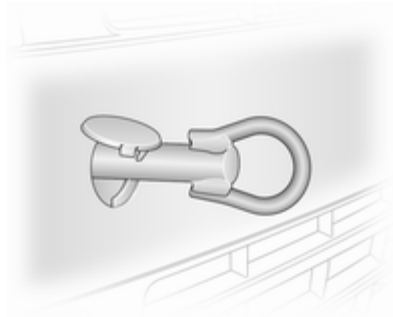

The towing eye is stowed with the vehicle tools ⇨ 133.

Screw the towing eye fully into the front towing point.

Attach a tow rope - or better still a tow rod - to the towing eye, never to the bumper or front suspension units.

Caution

Do not tow the vehicle from the rear. The front towing eye must only be used for towing and not recovering a vehicle.

Caution

Activate the child locks in the rear doors if the rear seats are occupied. Child locks ⇨ 25.

Switch on ignition to release steering wheel lock and to permit operation of brake lights, horn and windscreen wipers.

Transmission in neutral.

If neutral cannot be selected on vehicles with manual transmission automated, the vehicle must only be towed with the drive wheels raised off the ground.

Caution

Drive slowly. Do not drive jerkily. Excessive tractive force can damage the vehicle.

When the engine is not running, considerably more force is needed to brake and steer.

To prevent the entry of exhaust fumes from the towing vehicle, switch on the air recirculation system and close the windows.

Seek the assistance of a workshop.

After towing, unscrew the towing eye.

Towing another vehicle

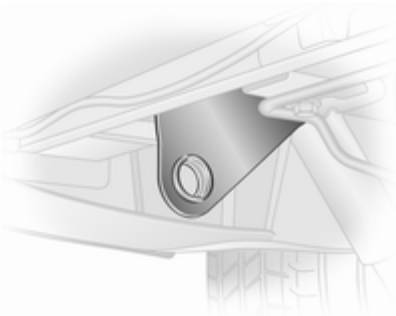

The fixed towing eye is located under the rear bumper.

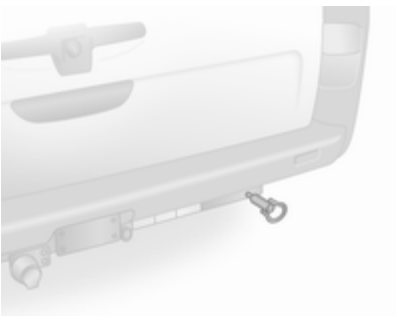

Vehicles with a towing hitch have a socket for the detachable towing eye. Screw the towing eye, supplied with the vehicle tools, fully into the socket.

Attach a tow rope - or better still a tow rod - to the rear towing eye, never to the rear axle and suspension units.

The rear towing eye must only be used for towing and not recovering a vehicle.

Caution

Drive slowly. Do not drive jerkily. Excessive tractive force can damage the vehicle.

Appearance care

Exterior care

Locks

The locks are lubricated at the factory using a high quality lock cylinder grease. Use de-icing agent only when absolutely necessary, as this has a degreasing effect and impairs lock function. After using de-icing agent, have the locks regreased by a workshop.

Washing

The paintwork of your vehicle is exposed to environmental influences. Wash and wax your vehicle regularly. When using automatic vehicle washes, select a programme that includes waxing.

Bird droppings, dead insects, resin, pollen and the like should be cleaned off immediately, as they contain aggressive constituents which can cause paint damage.

If using a vehicle wash, comply with the vehicle wash manufacturer's instructions. The windscreen wipers and rear window wiper must be switched off. Remove antenna and external accessories such as roof racks etc.

If you wash your vehicle by hand, make sure that the insides of the wheel housings are also thoroughly rinsed out.

Clean edges and folds on opened doors and the bonnet as well as the areas they cover.

Caution
Always use a cleaning agent with a pH value of 4 to 9. Do not use cleaning agents on hot surfaces.

Have the door hinges of all doors greased by a workshop.

Do not clean the engine compartment with a steam-jet or high-pressure jet cleaner.

Thoroughly rinse and leather-off the vehicle. Rinse leather frequently. Use separate leathers for painted and glass surfaces: remnants of wax on the windows will impair vision.

Do not use hard objects to remove spots of tar. Use tar removal spray on painted surfaces.

Exterior lights

Headlight and other light covers are made of plastic. Do not use any abrasive or caustic agents, do not use an ice scraper, and do not clean them dry.

Polishing and waxing

Wax the vehicle regularly (at the latest when water no longer beads). Otherwise, the paintwork will dry out.

Polishing is necessary only if the paint has become dull or if solid deposits have become attached to it.

Paintwork polish with silicone forms a protective film, making waxing unnecessary.

Plastic body parts must not be treated with wax or polishing agents.

Windows and windscreen wiper blades

Use a soft lint-free cloth or chamois leather together with window cleaner and insect remover.

When cleaning the rear window from inside, always wipe in parallel to the heating element to prevent damage.

For mechanical removal of ice, use a sharp-edged ice scraper. Press the scraper firmly against the glass so that no dirt can get under it and scratch the glass.

Clean smearing wiper blades with a soft cloth and window cleaner.

Wheels and tyres

Do not use high-pressure jet cleaners.

Clean rims with a pH-neutral wheel cleaner.

Rims are painted and can be treated with the same agents as the body.

Paintwork damage

Rectify minor paintwork damage with a touch-up pen before rust forms. Have more extensive damage or rust areas repaired by a workshop.

Underbody

Some areas of the vehicle underbody have a PVC undercoating while other critical areas have a durable protective wax coating.

After the underbody is washed, check the underbody and have it waxed if necessary.

Bitumen/rubber materials could damage the PVC coating. Have underbody work carried out by a workshop.

Before and after winter, wash the underbody and have the protective wax coating checked.

Engine compartment

It is advisable to wash the engine compartment before and after winter and preserve it with wax. Protect the alternator and brake fluid reservoir with plastic sheets before washing the engine.

When washing the engine with a steam-jet cleaner, do not direct the steam jet towards components of the antilock brake system, air conditioning system or the belt drive and its components.

After an engine wash, have all engine compartment components preserved thoroughly by a workshop using protective wax.

Do not use high-pressure jet cleaners.

Towing equipment

Do not clean the coupling ball bar with a steam-jet or high-pressure jet cleaner.

Interior care

Interior and upholstery

Only clean the vehicle interior, including the instrument panel fascia and panelling, with a dry cloth or interior cleaner.

The instrument cluster and the displays should only be cleaned using a soft damp cloth. If necessary use a weak soap solution.

Clean fabric upholstery with a vacuum cleaner and brush. Remove stains with an upholstery cleaner.

Clothing fabrics may not be colourfast. This could cause visible discolourations, especially on light-coloured upholstery. Removable stains and discolourations should be cleaned as soon as possible.

Clean seat belts with lukewarm water or interior cleaner.

Caution

Close Velcro fasteners as open Velcro fasteners on clothing could damage seat upholstery.

The same applies to clothing with sharp-edged objects, like zips or belts or studded jeans.

Plastic and rubber parts

Plastic and rubber parts can be cleaned with the same cleaner as used to clean the body. Use interior cleaner if necessary. Do not use any other agent. Avoid solvents and petrol in particular. Do not use high-pressure jet cleaners.

Service and maintenance

General information 148
Recommended fluids, lubricants and parts 150

General information

Service information

In order to ensure economical and safe vehicle operation and to maintain the value of your vehicle, it is of vital importance that all maintenance work is carried out at the proper intervals as specified.

The detailed, up-to-date service schedule for the vehicle is available at the workshop.

Service display ⇨ 69.

Engine identification ⇨ 153.

European service intervals - M9R 630 and M9R 692 engines only

Maintenance of your vehicle is required every 40,000 km or after 1 year, whichever occurs first, unless otherwise indicated by the service display.

European service intervals - except M9R 630 and M9R 692 engines

Maintenance of your vehicle is required every 30,000 km or after 1 year, whichever occurs first, unless otherwise indicated by the service display.

The European service intervals are valid for the following countries:

Andorra, Austria, Belgium, Croatia, Czech Republic, Denmark, Estonia, Finland, France, Germany, Greece, Hungary, Iceland, Ireland, Israel, Italy, Latvia, Liechtenstein, Lithuania, Luxembourg, Netherlands, Norway, Poland, Portugal, Slovakia, Slovenia, Spain, Sweden, Switzerland, United Kingdom.

International service intervals

Romania, Bulgaria - except F9Q engines:

Maintenance of your vehicle is required every 30,000 km or after 1 year, whichever occurs first, unless otherwise indicated by the service display.

Romania, Bulgaria - F9Q engines, Morocco - F4R engines, Turkey:

Maintenance of your vehicle is required every 20,000 km or after 1 year, whichever occurs first, unless otherwise indicated by the service display.

International petrol engines, Morocco - except F4R, Russia, Ukraine:

Maintenance of your vehicle is required every 15,000 km or after 1 year, whichever occurs first, unless otherwise indicated by the service display.

International diesel engines, International+ petrol engines, Algeria, Tunisia, U.A.E:

Maintenance of your vehicle is required every 10,000 km or after 1 year, whichever occurs first, unless otherwise indicated by the service display.

International+ diesel engines:

Maintenance of your vehicle is required every 8,000 km or after 1 year, whichever occurs first, unless otherwise indicated by the service display.

International++ diesel engines:

Maintenance of your vehicle is required every 5,000 km or after 1 year, whichever occurs first, unless otherwise indicated by the service display.

International++ petrol engines:

Maintenance of your vehicle is required every 5,000 km or after 6 months, whichever occurs first, unless otherwise indicated by the service display.

The **International** service intervals are valid for: Albania, Australia, Bosnia-Herzegovina, Cyprus, Kosovo, Macedonia, Malta, Montenegro, New Zealand, Serbia, Singapore, South Africa.

The **International+** service intervals are valid for: Belarus, Moldova.

The **International++** service intervals are valid for: Hong Kong, Kazakhstan.

Confirmations

Confirmation of service is recorded in the Service and Warranty Booklet. The date and mileage is completed with the stamp and signature of the servicing workshop.

Make sure that the Service and Warranty Booklet is completed correctly as continuous proof of service is essential if any warranty or goodwill claims are to be met, and is also a benefit when selling the vehicle.

Service display

The service interval is based on several parameters depending on usage.

The service display, located in the Driver Information Centre, indicates when the next service is due. Seek the assistance of a workshop.

Service display ⇨ 69.

Engine oil level monitor ⇨ 69.

Recommended fluids, lubricants and parts

Recommended fluids and lubricants

Only use products that meet the recommended specifications. Damage resulting from the use of products not in line with these specifications will not be covered by the warranty.

⚠Warning

Operating materials are hazardous and could be poisonous. Handle with care. Pay attention to information given on the containers.

Engine oil

Engine oil is identified by its quality and its viscosity. Quality is more important than viscosity when selecting which engine oil to use. The oil quality ensures e.g. engine cleanliness, wear protection and oil aging control, whereas viscosity grade gives information on the oil's thickness over a temperature range.

Dexos is the newest engine oil quality that provides optimum protection for petrol and diesel engines. If it is unavailable, engine oils of other listed qualities have to be used.

Select the appropriate engine oil based on its quality and on the minimum ambient temperature ⇨ 155.

Topping up engine oil

Engine oils of different manufacturers and brands can be mixed as long as they comply with the required engine oil quality and viscosity.

Use of engine oil with only ACEA A1/B1 or only A5/B5 quality is prohibited, since it can cause long-term engine damage under certain operating conditions.

Select the appropriate engine oil based on its quality and on the minimum ambient temperature ⇨ 155.

Additional engine oil additives

The use of additional engine oil additives could cause damage and invalidate the warranty.

Engine oil viscosity grades

The SAE viscosity grade gives information of the thickness of the oil.

Multigrade oil is indicated by two figures, e.g. SAE 5W-30. The first figure, followed by a W, indicates the low temperature viscosity and the second figure the high temperature viscosity.

Select the appropriate viscosity grade depending on the minimum ambient temperature ⇨ 155.

All of the recommended viscosity grades are suitable for high ambient temperatures.

Coolant and antifreeze

Use only silicate-free long life coolant (LLC) antifreeze approved for the vehicle, consult a workshop.

The system is factory filled with coolant designed for excellent corrosion protection and frost

protection down to approx. -28 °C. This concentration should be maintained all year round. The use of additional coolant additives that intend to give additional corrosion protection or seal against minor leaks can cause function problems. Liability for consequences resulting from the use of additional coolant additives will be rejected.

Brake fluid

Only use DOT4+ brake fluid approved for the vehicle, consult a workshop.

Over time, brake fluid absorbs moisture which will reduce braking effectiveness. The brake fluid should therefore be replaced at the specified interval.

Brake fluid should be stored in a sealed container to avoid water absorption.

Ensure brake fluid does not become contaminated.

Technical data

Vehicle identification 152
Vehicle data 155

Vehicle identification

Vehicle Identification Number

The Vehicle Identification Number is visible through the windscreen.

The VIN is also displayed behind a removable plastic cover on the right hand side door step.

Identification plate

The identification plate is located on the right hand door pillar.

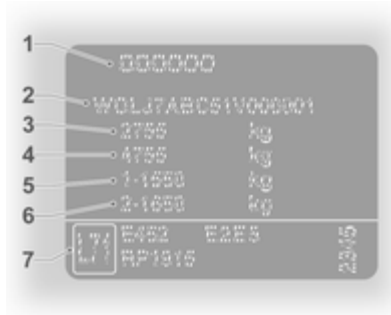

Information on identification plate[1]:

1 = Manufacturer, type approval number
2 = Vehicle Identification Number
3 = Permissible gross vehicle weight rating
4 = Permissible gross combination weight
5 = Maximum permissible front axle load
6 = Maximum permissible rear axle load
7 = Vehicle-specific or country specific data

The combined total of front and rear axle loads must not exceed the permissible gross vehicle weight. For example, if the front axle is bearing its maximum permissible load, the rear axle can only bear a load that is equal to the gross vehicle weight minus the front axle load.

The technical data is determined in accordance with European Community standards. We reserve the right to make modifications. Specifications in the vehicle documents always have priority over those given in this manual.

Engine identification

The technical data tables show the engine identifier code. Engine data ⇨ 157.

To identify the respective engine, refer to the engine power in the EEC Certificate of Conformity provided with your vehicle or other national registration documents.

[1] The VIN plate on your vehicle may differ from the illustration shown.

It is possible, using the Vehicle Identification Number (VIN), to determine the engine type that is installed in your vehicle. For further information consult a workshop.

Vehicle data
Recommended fluids and lubricants

Required engine oil quality

Engine oil quality	
dexos 2	✓

In case dexos quality is unavailable in International countries you may use the oil qualities listed below:

Engine oil quality	
GM-LL-A-025 petrol engines	✓
GM-LL-B-025 diesel engines	✓
ACEA A3/B3 petrol engines	✓
ACEA A3/B4 diesel engines without DPF	✓
ACEA C3 diesel engines with DPF	✓

Engine oil viscosity grades

Ambient temperature	Petrol and diesel engines
down to -25 °C	SAE 5W-30 or SAE 5W-40
below -25 °C	SAE 0W-30 or SAE 0W-40

Engine data

Sales designation	2.0	1.9	2.0
Engine identifier code	F4R 820	F9Q 760	M9R 630 [2)] M9R 692
Number of cylinders	4	4	4
Piston displacement [cm^3]	1998	1870	1995
Engine power [kW]	86	74	66 / 84
at rpm	4700	3500	3500
Torque [Nm]	186	240	260 / 300
at rpm	3750	1800	1500
Fuel type	Petrol	Diesel	Diesel
Octane rating RON recommended	**95**		
possible	98		
possible	91[3)]		

[2)] Low / High output.

[3)] If no unleaded premium-grade fuels are available, 91 RON can be used, taking care to avoid severe engine loads and driving at full throttle.

Sales designation	2.0	2.0
Engine identifier code	M9R 786[4)]	M9R 786[5)] M9R 788
Number of cylinders	4	4
Piston displacement [cm^3]	1995	1995
Engine power [kW]	66	84
at rpm	3500	3500
Torque [Nm]	290	310
at rpm	1600	2100
Fuel type	Diesel	Diesel

4) Low output.
5) High output.

Vehicle weight

Kerb weight, basic model

Model	Wheelbase	Roof	Payload Class	Engine	Kerb weight[6)7)]
Van	Short	Standard	1000	F4R	1660
				F9Q	1660
				M9R	1678
		Standard	1200	F4R	1660
				F9Q	1669
				M9R	1688
		High	1200	F4R	1695
				F9Q	1713
				M9R	1760

6) Kerb weight and gross vehicle weight increase on models fitted with bad road equipment package - refer to VIN plate.
7) Minimum vehicle weight according to Type Approval, including all fluids, vehicle tools and a 90% fuel load. Excludes the weight of the driver and deletable options, e.g. spare wheel, bulkhead and sliding side load door. Final weight may vary according to the specification of the vehicle, e.g. options, deleted options and accessories.

Model	Wheelbase	Roof	Payload Class	Engine	Kerb weight[6)7)]
Van	Long	Standard	1200	F4R	1660
				F9Q	1676
				M9R	1724
		High	1200	F4R	1745
				F9Q	1761
				M9R	1810

6) Kerb weight and gross vehicle weight increase on models fitted with bad road equipment package - refer to VIN plate.
7) Minimum vehicle weight according to Type Approval, including all fluids, vehicle tools and a 90% fuel load. Excludes the weight of the driver and deletable options, e.g. spare wheel, bulkhead and sliding side load door. Final weight may vary according to the specification of the vehicle, e.g. options, deleted options and accessories.

Model	Wheelbase	Roof	Payload Class	Engine	Kerb weight[6)7)]
Combi	Short	Standard	1000	F4R	1818
				F9Q	1835
				M9R	1883
		Standard	1200	F4R	1829
				F9Q	1846
				M9R	1893
	Long	Standard	1200	F4R	1890
				F9Q	1906
				M9R	1954

6) Kerb weight and gross vehicle weight increase on models fitted with bad road equipment package - refer to VIN plate.
7) Minimum vehicle weight according to Type Approval, including all fluids, vehicle tools and a 90% fuel load. Excludes the weight of the driver and deletable options, e.g. spare wheel, bulkhead and sliding side load door. Final weight may vary according to the specification of the vehicle, e.g. options, deleted options and accessories.

Model	Wheelbase	Roof	Payload Class	Engine	Kerb weight[6)7)]
Platform cab	Long	Standard	1200	F4R	1449[8)]
				F9Q	1467[8)]
				M9R	1515[8)]
Tour	Short	Standard	900	F4R	1879
				F9Q	-
				M9R	1944

6) Kerb weight and gross vehicle weight increase on models fitted with bad road equipment package - refer to VIN plate.
7) Minimum vehicle weight according to Type Approval, including all fluids, vehicle tools and a 90% fuel load. Excludes the weight of the driver and deletable options, e.g. spare wheel, bulkhead and sliding side load door. Final weight may vary according to the specification of the vehicle, e.g. options, deleted options and accessories.
8) Vehicle without body conversion.

Vehicle dimensions

Type	Van		Combi/Tour[9]		Platform cab
Wheelbase	Short	Long	Short	Long	Long
Length [mm]	4782	5182	4782	5182	5130
Width without exterior mirrors [mm]	1904	1904	1904	1904	1904
Width with two exterior mirrors [mm]	2232	2232	2232	2232	2232/2434[10]
Height - unladen (without antenna) [mm][11]					
Standard roof	1968	1968	1968	1968	1981
High roof	2492	2492	-	-	-
Wheelbase [mm]	3098	3498	3098	3498	3498
Track width [mm]					
Front	1615	1615	1615	1615	1615
Rear	1630	1630	1630	1630	1630

[9] Tour available with short wheel base only.
[10] With wide arm exterior mirrors.
[11] Vehicle height without body conversion.

Loadspace dimensions

	Van			
Wheelbase	**Short**		**Long**	
Roof height	**Standard**	**High**	**Standard**	**High**
Maximum rear door aperture height [mm]	1335	1818	1335	1818
Rear door aperture width (at floor) [mm]	1390	1390	1390	1390
Maximum load area height [mm]	1387	1913	1387	1913
Maximum load area width [mm]	1690	1690	1690	1690
Width between wheel arches [mm]	1268	1268	1268	1268
Maximum load floor length [mm]	2400	2400	2800	2800
Loading height unladen [mm]	543	547	542	548
Sliding side door aperture width [mm]	1000	1000	1000	1000
Sliding side door aperture height [mm]	1285	1285	1285	1285

Capacities

Engine oil

Engine	F4R	F9Q	M9R
Engine oil including filter [l]	5.4	4.7	7.7
between MIN and MAX [l]	1.5 - 2.0	1.5 - 2.0	1.5 - 2.0

Fuel tank

Fuel tank, nominal capacity [l]	92

Tyre pressures

Tyre	Tyre pressure with full load[12)]	
	Front [kPa/bar] (psi)	Rear [kPa/bar] (psi)
195/65 R16 C	340/3.4 (49)	370/3.7 (54)
195/75 R16 C	380/3.8 (55)	420/4.2 (61)
205/65 R16 C	380/3.8 (55)	420/4.2 (61)
215/65 R16 C	310/3.1 (45)	340/3.4 (49)

[12)] The spare wheel should be set to the highest applicable pressure shown in the table.

Customer information

Customer information 167
Vehicle data recording and privacy 167

Customer information

Declaration of conformity

This vehicle has systems that transmit and/or receive radio waves subject to Directive 1999/5/EC. These systems are in compliance with the essential requirements and other relevant provisions of Directive 1999/5/EC. Copies of the original Declarations of Conformity can be obtained on our website.

Vehicle data recording and privacy

Event data recorders

Data storage modules in the vehicle

A large number of electronic components of your vehicle contain data storage modules temporarily or permanently storing technical data about the condition of the vehicle, events and errors. In general, this technical information documents the condition of parts, modules, systems or the environment:

- Operating conditions of system components (e.g. filling levels)
- Status messages of the vehicle and its single components (e.g. number of wheel revolutions / rotational speed, deceleration, lateral acceleration)
- Dysfunctions and defects in important system components

- Vehicle reactions in particular driving situations (e.g. inflation of an airbag, activation of the stability regulation system)
- Environmental conditions (e.g. temperature)

These data are exclusively technical and help identifying and correcting errors as well as optimizing vehicle functions.

Motion profiles indicating travelled routes cannot be created with these data.

If services are used (e.g. repair works, service processes, warranty cases, quality assurance), employees of the service network (manufacturer included) are able to read out this technical information from the event and error data storage modules applying special diagnostic devices. If required, you will receive further information at these workshops. After an error has been corrected, the data are deleted from the error storage module or they are constantly overwritten.

When using the vehicle, situations may occur in which these technical data related to other information (accident report, damages on the vehicle, witness statements etc.) may be associated with a specific person - possibly, with the assistance of an expert.

Additional functions contractually agreed upon with the client (e.g. vehicle location in emergency cases) allow the transmission of particular vehicle data from the vehicle.

Radio Frequency Identification (RFID)

RFID technology is used in some vehicles for functions such as tyre pressure monitoring and ignition system security. It is also used in connection with conveniences such as radio remote controls for door locking/unlocking and starting, and in-vehicle transmitters for garage door openers. RFID technology in Opel vehicles does not use or record personal information or link with any other Opel system containing personal information.

Index

A

Accessories and vehicle modifications 117
Adjustable air vents 92
Airbag and belt tensioners 72
Airbag deactivation 49, 72
Airbag system 44
Air conditioning regular operation 93
Air conditioning system 87
Air intake 93
Air vents..... 92
Alert..... 77
Antifreeze..... 121
Antilock brake system 103
Antilock brake system (ABS) 74
Anti-theft alarm system 28
Anti-theft locking system 27
Appearance care..... 145
Armrest 37
Ashtrays 67
Automatic light control 81
Automatic locking 25
Auxiliary heater..... 89

B

Battery, jump starting..... 141
Belts..... 41
Bonnet 118
Brake and clutch fluid..... 150
Brake assist 104
Brake fluid 123
Brakes 103, 123
Brake system 73
Breakdown..... 143
Bulb replacement 126

C

Capacities 165
Car Pass 20
Catalytic converter 98
Central locking system 22
Centre high-mounted brake light 128
Changing tyre and wheel size ... 135
Charging system 73
Child locks 25
Child restraint installation locations 51
Child restraint systems 50
Cigarette lighter 66
Cleaning the vehicle..... 145
Climate control 17
Clock 65
Code..... 77
Control indicators..... 70
Control of the vehicle 95
Controls..... 62
Controls in steering wheel..... 62
Convex shape 30
Coolant..... 121

Coolant and antifreeze..... 150
Coolant heater..... 89
Coupling ball bar..... 115
Cruise control 75, 106
Cupholders 58
Curtain airbag system 48

D

Danger, Warnings and Cautions . . . 3
Dashboard..... 10
Daytime running light..... 81
Declaration of conformity..... 167
Diesel fuel filter 124
Diesel fuel system bleeding 125
Diesel particle filter 97
Doors..... 26
Driver Information Centre..... 76
Driving characteristics and towing tips 114
Driving hints..... 95

E

Electric adjustment 30
Electrical system..... 130
Electronic driving programmes . . 101
Electronic Stability Program 74, 105
End-of-life vehicle recovery 118
Engine air filter..... 121
Engine air flow indicator..... 121
Engine coolant 121
Engine coolant temperature 74
Engine data 157
Engine exhaust 97
Engine identification..... 153
Engine oil 119, 150, 155
Engine oil level 78
Engine oil level monitor..... 69
Engine oil pressure 75
Event data recorders..... 167
Exhaust gases..... 97
Exit lighting 85
Exterior care 145
Exterior light 75
Exterior lighting 14, 81
Exterior mirrors..... 30

F

Fault 102
First aid kit 60
Fixed air vents 93
Fog light 75
Fog lights..... 83, 126
Fog tail light 129
Folding mirrors 30
Front airbag system 47
Front fog lights 83
Front seats..... 35
Front storage..... 58
Front turn signal lights 127
Fuel..... 111
Fuel consumption - CO_2-Emissions 113
Fuel for diesel engines 112
Fuel for petrol engines 111
Fuel gauge 68
Fuse box..... 131
Fuses 130

G

Gauges..... 67
General information 114
Glovebox 57

H

Hand brake - see Parking brake. 104
Hazard warning flashers 83
Headlight flash 82
Headlight range adjustment 82
Headlights..... 81, 82, 126
Headlights when driving abroad . . 83
Head restraint adjustment 8
Head restraints 34
Heated mirrors 31
Heated rear window 33
Heating 37
Heating and ventilation system . . . 86
High beam 75, 82
Horn 15, 63

I
Identification plate 153
Ignition switch positions 96
Immobiliser 29
Indicators..... 67
Information displays..... 76
Instrument panel fuse box 131
Instrument panel illumination 130
Instrument panel overview 10
Instrument panel storage..... 57
Interior care 146
Interior lights 84, 129
Interior mirrors..... 31
Interruption of power supply 102
Introduction 3
Isofix child restraint systems 56

J
Jump starting 141

K
Keys 20
Keys, locks..... 20

L
Lashing eyes 59
Light covers, misted..... 84
Lighting..... 81
Light switch 81
Load compartment 27
Load compartment cover 58
Load compartment lighting..... 84
Loading information 60
Load rails and hooks 59
Low fuel 75

M
Malfunction indicator light 73
Manual adjustment 30
Manual anti-dazzle 31
Manual mode 101
Manual transmission 98
Manual transmission automated . 99
Manual windows 32
Messages..... 77
Mirror adjustment 8
Mirrors..... 30, 31
Misted light covers 84

N
New vehicle running-in 96
Number plate light 128

O
Object detection systems..... 110
Octane rating..... 157
Odometer 67
Oil..... 119
Oil, engine..... 150, 155
Oil level..... 69
Oil pressure..... 75
Outside temperature 65
Overcab storage 58
Overrun cut-off 97

P
Parking 19, 97
Parking assist 110
Parking brake 104
Particulate filter..... 97
Performing work 118
Pollen filter 93
Power outlets 66
Power steering fluid..... 122
Power windows 32
Preheating 74
Puncture..... 138

R
Radio Frequency Identification (RFID)..... 168
Radio remote control 20
Reading lights 85
Rear air conditioning system 88
Rear doors 26
Rear fog light 75
Rear fog lights 84
Rear heating system 88
Rear seats..... 38
Rear windows 32

Rear window wiper/washer 64
Recommended fluids and lubricants 150, 155
Refuelling 112
Remote control..... 20
Reversing light 128
Reversing lights 84
Roof rack 60

S

Safety belts..... 41
Safety net 59
Seat adjustment 7, 36
Seat belt 8
Seat belt reminder 72
Seat belts 41
Seat heating..... 37
Seat position 35
Second row seats 38
Selector lever 99
Service 94, 148
Service display 69
Service information 148
Service vehicle soon 73
Side airbag system 48
Sidelights..... 81
Side turn signal lights 128
Sliding door 26
Spare wheel 140
Speedometer 67
Starting and operating..... 96
Starting off 18
Starting the engine 96, 99
Steering..... 95
Steering column controls..... 63
Steering wheel adjustment 9, 62
Steering wheel controls 62
Stop engine..... 73
Storage..... 57
Storage compartments..... 57
Sun visors 33
Symbols 4

T

Tachograph..... 80
Tachometer 68
Tailgate..... 27
Tail lights 127
Technical data..... 157
Three-point seat belt 42
Tools 133
Top-tether fastening eyes 56
Tow bar..... 114
Towing..... 114, 143
Towing another vehicle 144
Towing a trailer..... 115
Towing equipment 115
Towing eye..... 143
Towing the vehicle 143
Traction Control system 104
Trailer coupling..... 114
Trailer towing 115
Transmission 17
Transmission display 70, 99
Tread depth 134
Trip computer 78
Triple-Info-Display 76
Turn and lane-change signals 83
Turn signal 72
Tyre chains 135
Tyre changing..... 138
Tyre designations 133
Tyre pressure 134
Tyre pressures 166
Tyre repair kit 135
Tyres 133
Tyres and wheel size, changing. 135

U

Ultrasonic parking assist..... 110
Upholstery..... 146
Upshift..... 74
Using this manual 3

V

Vehicle battery 123
Vehicle checks..... 118
Vehicle data..... 155
Vehicle data recording and privacy..... 167

Vehicle dimensions 163
Vehicle Identification Number 152
Vehicle jack..... 133
Vehicle messages 77
Vehicle security..... 27
Vehicle specific data 3
Vehicle storage..... 117
Vehicle tools..... 133
Vehicle unlocking 6
Vehicle weight 159
Ventilation..... 86

W

Warning chimes 77
Warning lights..... 67
Warning triangle 60
Washer and wiper systems 16
Washer fluid 122
Washing the vehicle..... 145
Wheel changing 138
Wheel covers 135
Wheels and tyres 133
Windows..... 31, 32
Windscreen..... 31
Windscreen wiper/washer 63
Winter tyres 133
Wiper blade replacement 125

Copyright by ADAM OPEL AG, Rüsselsheim, Germany.

The information contained in this publication is effective as of the date indicated below. Adam Opel AG reserves the right to make changes to the technical specifications, features and design of the vehicles relative to the information in this publication as well as changes to the publication itself.

Edition: September 2013, ADAM OPEL AG, Rüsselsheim.

Printed on chlorine-free bleached paper.

KTA-2682/6-en

09/2013