Workshop Manual

Werkplaatshandboek

Manual d'Atelier

Werkstatthandbuch

Manuale d'Officina

Manual de Taller

Manual de Oficina

Defender

LAND ROVER

DEFENDER 1999 & 2002 MY

WORKSHOP MANUAL SUPPLEMENT
& BODY REPAIR MANUAL

This Supplement supersedes Workshop Manual VDR 100250
and should be used in conjunction with the following Manuals:

Workshop Manual - Defender 300 Tdi LRL 0097
Overhaul Manual - R380 gearbox LRL 0003 3rd edition
Overhaul Manual - LT230T Transfer gearbox LRL 0081 3rd edition

Publication Part No. LRL 0410ENG (3rd Edition)
© Land Rover 2001

All rights reserved. No part of this publication may be reproduced, stored in a retrieval system or transmitted in any form, electronic, mechanical, recording or other means without prior permission from Land Rover.

CONTENTS

01 INTRODUCTION
04 GENERAL SPECIFICATION DATA
05 ENGINE TUNING DATA
07 GENERAL FITTING REMINDERS
09 LUBRICANTS, FLUIDS AND CAPACITIES
10 MAINTENANCE
12 ENGINE
17 EMISSION CONTROL
18 ENGINE MANAGEMENT SYSTEM
19 FUEL SYSTEM
26 COOLING SYSTEM
30 MANIFOLD AND EXHAUST SYSTEM
33 CLUTCH
37 MANUAL GEARBOX
41 TRANSFER GEARBOX
47 PROPELLER SHAFTS
57 STEERING
60 FRONT SUSPENSION
64 REAR SUSPENSION
70 BRAKES
76 CHASSIS AND BODY
77 PANEL REPAIRS
82 AIR CONDITIONING
84 WIPERS AND WASHERS
86 ELECTRICAL
88 INSTRUMENTS

01 - INTRODUCTION

CONTENTS

INFORMATION

	Page
INTRODUCTION	1
DIMENSIONS	1
REFERENCES	1
REPAIRS AND REPLACEMENTS	1
POISONOUS SUBSTANCES	1
FUEL HANDLING PRECAUTIONS	2
SYNTHETIC RUBBER	3
RECOMMENDED SEALANTS	3
USED ENGINE OIL	3
ACCESSORIES AND CONVERSIONS	4
WHEELS AND TYRES	4
STEAM CLEANING	4
SPECIFICATION	4
SPECIAL SERVICE TOOLS	4
JACKING	5
HYDRAULIC VEHICLE RAMP (FOUR POST)	6
TWO POST VEHICLE RAMPS	6
DYNAMOMETER TESTING	6
TOWING	7
TRANSPORTING THE VEHICLE BY TRAILER	7
JUMP STARTING	8
ABBREVIATIONS AND SYMBOLS USED IN THIS MANUAL	9
CROSS REFERENCE OF EMISSION SYSTEM TERMINOLOGY	10
VEHICLE IDENTIFICATION NUMBER (VIN)	11
LOCATION OF IDENTIFICATION NUMBERS	12
FAULT DIAGNOSTIC EQUIPMENT	13
READING THIS SUPPLEMENT	14

INTRODUCTION

This Workshop Manual Supplement covers vehicles from 1999 and 2002 model year onwards. The Body Repair Manual has also been incorporated into this supplement. Amendments and additional pages will be issued, when necessary, to ensure that the supplement covers latest models.

This Supplement is designed to assist skilled technicians in the efficient repair and maintenance of Land Rover Defender vehicles.

Individuals who undertake their own repairs should have some skill and training, and limit repairs to components which could not affect the safety of the vehicle or its passengers. Any repairs required to safety critical items such as steering, brakes, suspension or supplementary restraint system should be carried out by a Land Rover Dealer. Repairs to such items should NEVER be attempted by untrained individuals.

WARNINGS, CAUTIONS and **NOTES** are given throughout this Manual in the following form:

WARNING: Procedures which must be followed precisely to avoid the possibility of personal injury.

CAUTION: This calls attention to procedures which must be followed to avoid damage to components.

NOTE: This calls attention to methods which make a job easier or gives helpful information.

DIMENSIONS

The dimensions quoted are to design engineering specification. Alternative unit equivalents, shown in brackets following the dimensions, have been converted from the original specification.

REFERENCES

References to the left or right hand side in the manual are made when viewing the vehicle from the rear. With the engine and gearbox assembly removed, the crankshaft end of the engine is referred to as the front.

To reduce repetition, some operations covered in this Supplement do not include reference to testing the vehicle after repair.

It is essential that work is inspected and tested after completion and if necessary a road test of the vehicle is carried out, particularly where safety related items are concerned.

REPAIRS AND REPLACEMENTS

When replacement parts are required it is essential that Land Rover parts are used.
Attention is particularly drawn to the following points concerning repairs and the fitting of replacement parts and accessories: Safety features embodied in the vehicle may be impaired if other than Land Rover parts are fitted. In certain territories, legislation prohibits the fitting of parts not to the vehicle manufacturer's specification. Torque spanner values given in the Supplement must be strictly adhered to. Locking devices, where specified, must be fitted. If the efficiency of a locking device is impaired during removal it must be replaced with a new one. Certain fasteners must not be re-used. These fasteners are specified in the Supplement.

POISONOUS SUBSTANCES

Many liquids and other substances used are poisonous and therefore must not be consumed. It is also advisable to keep all substances away from open wounds. These substances among others include anti-freeze, brake fluid, fuel, windscreen washer additives, air conditioning refrigerant, lubricants and various adhesives.

FUEL HANDLING PRECAUTIONS

The following information provides basic precautions which must be observed if fuel is to be handled safely. It also outlines the other areas of risk which must not be ignored.

This information is issued for basic guidance only, and in any case of doubt, appropriate enquiries should be made of your local Fire Officer or Fire Department.

Fuel vapour is highly flammable and in confined spaces is also very explosive and toxic and when diluted with air becomes a readily ignitable mixture. The vapour is heavier than air and will always fall to the lowest level. It can readily be distributed throughout a workshop by air current, consequently, even a small spillage of fuel is very dangerous.

Always have a fire extinguisher containing **FOAM CO^2 GAS,** or **POWDER** close at hand when handling fuel, or when dismantling fuel systems and in areas where fuel containers are stored.

WARNING: It is imperative that the battery is not disconnected during fuel system repairs as arcing at the battery terminal could ignite fuel vapour in the atmosphere.
Always disconnect the vehicle battery BEFORE carrying out work on the fuel system.
Whenever fuel is being handled, transferred or stored, or when fuel systems are being dismantled all forms of ignition must be extinguished or removed, any leadlamps used must be flame proof and kept clear of spillage.
No one should be permitted to repair components associated with fuel without first having had fuel system training.

Hot fuel handling precautions

WARNING: Before commencing any operation requiring fuel to be drained from the fuel tank, the following procedure must be adhered to:

1. Allow sufficient time for the fuel to cool, thus avoiding contact with hot fuels.
2. Vent the system by removing the fuel filler cap in a well ventilated area. Refit the filler cap until the commencement of fuel drainage.

Fuel transfer

WARNING: Fuel must not be extracted or drained from any vehicle while it is standing over a pit.

The transfer of fuel from the vehicle fuel tank must be carried out in a well ventilated area. An approved transfer tank must be used according to the transfer tank manufacturer's instructions and local regulations, including attention to grounding of tanks.

Fuel tank removal

A **FUEL VAPOUR** warning label must be attached to the fuel tank upon removal from the vehicle.

Fuel tank repair

Under no circumstances should a repair to any tank be attempted.

SYNTHETIC RUBBER

Many ’0’ ring seals, flexible pipes and other similar items which appear to be natural rubber are made of synthetic materials called Fluoroelastomers. Under normal operating conditions this material is safe, and does not present a health hazard. However, if the material is damaged by fire or excessive heat, it can break down and produce highly corrosive Hydrofluoric acid which can cause serious burns on contact with skin. Should the material be in a burnt or overheated condition handle only with seamless industrial gloves. Decontaminate and dispose of the gloves immediately after use.

If skin contact does occur, remove any contaminated clothing immediately and obtain medical assistance without delay. In the meantime, wash the affected area with copious amounts of cold water or limewater for fifteen to sixty minutes.

RECOMMENDED SEALANTS

A number of branded products are recommended in this manual for use during maintenance and repair work.
These items include:
HYLOMAR GASKET AND JOINTING COMPOUND
and
HYLOSIL RTV SILICONE COMPOUND.

They should be available locally from garage equipment suppliers. If there is any problem obtaining supplies, contact the following company for advice and the address of the nearest supplier.

MARSTON LUBRICANTS LTD.
Hylo House,
Cale Lane,
New Springs,
Wigan WN2 1JR

Tel 01942 824242

USED ENGINE OIL

WARNING: Prolonged and repeated contact with engine or motor oil will result in the removal of natural fats from the skin, leading to dryness, irritation and dermatitis. Used engine oil contains potentially harmful contaminants which may cause skin cancer. Adequate means of skin protection and washing facilities should be provided.

Handling precautions

1. Avoid prolonged and repeated contact with oils, particularly used engine oils.
2. Wear protective clothing, including impervious gloves where applicable.
3. Do not put oily rags in pockets.
4. Avoid contaminating clothes, particularly underwear, with oil.
5. Overalls must be cleaned regularly. Discard unwashable clothing and oil impregnated footwear.
6. First aid treatment must be obtained immediately for open cuts and wounds.
7. Use barrier creams, before each work period, to help the removal of oil from the skin.
8. Wash with soap and water to ensure all oil is removed (skin cleansers and nail brushes will help). Preparations containing lanolin replace the natural skin oils which have been removed.
9. Do not use gasoline, kerosene, diesel fuel, petrol, thinners or solvents for washing the skin.
10. If skin disorders develop, obtain medical advice.
11. Where practicable, degrease components prior to handling.
12. Where there is a risk of eye contact, eye protection should be worn, for example, goggles or face shields; in addition an eye wash facility should be provided.

Disposing of used oils

Environmental protection precaution

It is illegal to pour used oil onto the ground, down sewers or drains, or into waterways.

Dispose of used oil through authorised waste disposal contractors. If in doubt contact your Local Authority for advice on disposal facilities.

ACCESSORIES AND CONVERSIONS

DO NOT FIT unapproved accessories or conversions, as they could affect the safety of the vehicle.
Land Rover will not accept liability for death, personal injury, or damage to property which may occur as a direct result of the fitting of non-approved conversions to the vehicle.

WHEELS AND TYRES

WARNING: DO NOT replace the road wheels with any type other than genuine Land Rover wheels which are designed for multi-purpose on and off road use and have very important relationships with the proper operation of the suspension system and vehicle handling. Replacement tyres must be of the make and sizes recommended for the vehicle, and all tyres must be the same make, ply rating and tread pattern.

STEAM CLEANING

To prevent consequential rusting, any steam cleaning within the engine bay **MUST** be followed by careful re-waxing of the metallic components affected. Particular attention must be given to the steering column, engine coolant pipes and hose clips.

SPECIFICATION

The specification details and instructions set out in this Supplement apply only to a range of vehicles and not to any one. For the specification of a particular vehicle purchasers should consult their Dealer.
The Manufacturer reserves the right to vary specifications with or without notice, and at such times and in such manner as it thinks fit. Major as well as minor changes may be involved in accordance with the Manufacturer's policy of constant product improvement.

Whilst every effort is made to ensure the accuracy of the particulars contained in this Supplement, neither the Manufacturer or Dealer, by whom this Supplement is supplied, shall in any circumstances be held liable for any inaccuracy or the consequences thereof.

SPECIAL SERVICE TOOLS

The use of approved special service tools is important. They are essential if service operations are to be carried out efficiently, and safely. Where special tools are specified, **only these tools should be used to avoid the posibility of personal injury or damage to the components.**Also, the amount of time which they can save can be considerable.

Special tools bulletins will be issued periodically giving details of new tools as they are introduced.

All orders and enquiries from the United Kingdom should be sent direct to Cartool (UK) Ltd. Overseas orders should be placed with the local Cartool distributor, where one exists. Countries where there is no distributor may order direct from:

Cartool (UK) Ltd.
Unit 3,
Sterling Business Park,
Brackmills,
Northampton,
England, NN4 7EX.

The tools recommended in this Workshop Manual are listed in an illustrated catalogue, obtainable from:

Land Rover Publications,
Character Mailing,
Heysham Road,
Bootle,
Merseyside, L70 1JL

JACKING

The following instructions must be carried out before raising the vehicle off the ground.

1. Use a solid level ground surface.
2. Apply parking brake.
3. Select 1st gear in main gearbox.
4. Select Low range in transfer gearbox.

CAUTION: To avoid damage occurring to the under body components of the vehicle the following jacking procedures must be adhered to.

DO NOT POSITION JACKS OR AXLE STANDS UNDER THE FOLLOWING COMPONENTS.

Body structure
Bumpers
Fuel lines
Brake lines
Front radius arms
Panhard rod
Steering linkage
Rear Trailing links
Fuel tank
Engine sump
Gearbox bell housing

Jack or support vehicle by axles only.

Vehicle jack

The jack provided with the vehicle is only intended to be used in an emergency, for changing a tyre. Do **NOT** use the jack for any other purpose. Refer to Owner's Manual for vehicle jack location points and procedure. Never work under a vehicle supported by the vehicle jack.

Hydraulic jack

A hydraulic jack with a minimum 1500 kg, 3,300 lbs load capacity must be used, see illustration J6083.

CAUTION: Do not commence work on the underside of the vehicle until suitable axle stands have been positioned under the axle, see J6084.

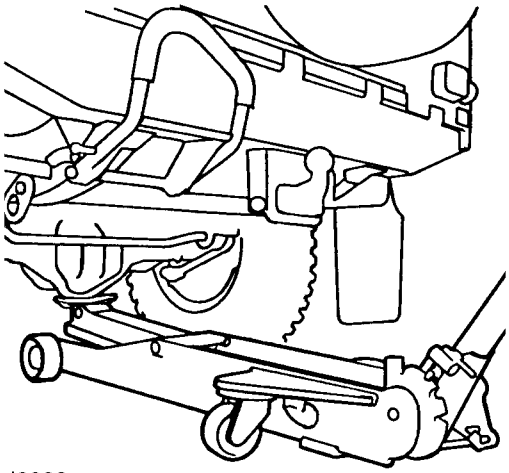

J6083

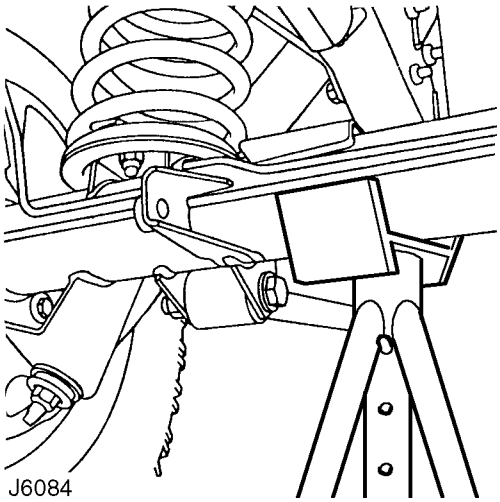

J6084

Raise the front of the vehicle

1. Position cup of hydraulic arm under differential casing.

NOTE: The differential casing is not central to the axle. Care should be taken when raising the front road wheels off the ground as the rear axle has less sway stiffness.

2. Raise front road wheels to enable an axle stand to be installed under left hand axle tube.

3. Position an axle stand under right hand axle tube, carefully lower jack until axle sits securely on both axle stands, remove trolley jack.
4. Before commencing work on underside of vehicle re-check security of vehicle on stands.
5. Reverse procedure when removing vehicle from stands.

Raise rear of vehicle

1. Position cup of hydraulic arm under differential casing.
2. Raise vehicle to enable axle stands to be installed under left and right hand axle tubes.
3. Lower jack until axle sits securely on axle stands, remove trolley jack.
4. Before commencing work on underside of vehicle re-check security of vehicle on stands.
5. Reverse procedure when removing vehicle from stands.

HYDRAULIC VEHICLE RAMP (FOUR POST)

Use only a 'drive on' type ramp which supports vehicle on its road wheels. If a 'wheel-free' condition is required, use a 'drive on' ramp incorporating a 'wheel-free' system providing support beneath axle casings. Alternatively, place vehicle on a firm, flat floor and support on axle stands.

TWO POST VEHICLE RAMPS

The manufacturer of LAND ROVER VEHICLES DOES NOT recommend using 'Two Post' ramps that employ four adjustable support arms. These are NOT considered safe for Land Rover vehicles. If vehicle is installed on a Two Post ramp responsibility for safety of vehicle and personnel performing service operations is in the hands of the Service Provider.

DYNAMOMETER TESTING

The front and rear axles cannot be driven independently.

WARNING: DO NOT attempt to drive individual wheels with vehicle supported on floor jacks or stands.

Four wheel dynamometers

Provided that front and rear dynamometer rollers are rotating at identical speeds and that normal workshop safety standards are applied, there is no speed restriction during testing except any that may apply to the tyres.

Two wheel dynamometers

IMPORTANT: Use a four wheel dynamometer for brake testing if possible.

If brake testing on a single axle rig is necessary it must be carried out with propeller shaft to rear axle removed, AND neutral selected in BOTH main gearbox and transfer gearbox. When checking brakes, run engine at idle speed to maintain servo vacuum.
If checking engine performance, the transfer box must be in high range and propeller shaft to stationary axle must be removed.

TOWING

CAUTION: The vehicle has permanent four-wheel drive. The following towing instructions must be adhered to:

Towing the vehicle on all four wheels with driver operating steering and brakes.

1. Turn ignition key to position ’1’ to release steering lock.
2. Select neutral in main gearbox and transfer gearbox.

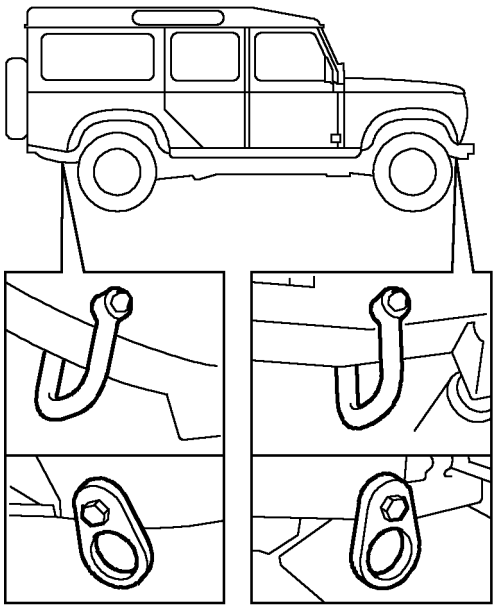

J6085

3. Secure tow rope, chain or cable to front towing eyes (alternative types shown).
4. Release the parking brake.

CAUTION: The brake servo and power assisted steering system will not be functional without the engine running. Greater pedal pressure will be required to apply the brakes, the steering system will require greater effort to turn the front road wheels. The vehicle tow connection should be used only in normal road conditions, ’snatch’ recovery should be avoided.

Rear suspended tow by breakdown vehicle

1. If the front axle is to be trailed turn ignition key to position ’1’ to release steering lock.
2. Select neutral in main gearbox and transfer box.

CAUTION: The steering wheel and/or linkage must be secured in a straight ahead position. DO NOT use the steering lock mechanism for this purpose.

TRANSPORTING THE VEHICLE BY TRAILER

Lashing/towing eyes are provided on front and rear of the chassis side members, see J6085, to facilitate the securing of the vehicle to a trailer or other means of transportation.

CAUTION: Underbody components must not be used as lashing points.

Install vehicle on trailer and apply park brake. Select neutral in main gearbox.

JUMP STARTING

WARNING: Hydrogen and oxygen gases are produced during normal battery operation. This gas mixture can explode if flames, sparks or lighted tobacco are brought near battery. When charging or using a battery in an enclosed space, always provide ventilation and shield your eyes.

Keep out of reach of children. Batteries contain sulphuric acid. Avoid contact with skin, eyes, or clothing. Also, shield eyes when working near battery to protect against possible splashing of acid solution. In case of acid contact with skin, eyes, or clothing, flush immediately with water for a minimum of fifteen minutes. If acid is swallowed, drink large quantities of milk or water, followed by milk of magnesia, a beaten egg, or vegetable oil.

SEEK MEDICAL AID IMMEDIATELY.

To Jump Start - Negative Ground Battery

WARNING: To avoid any possibility of injury use particular care when connecting a booster battery to a discharged battery.

1. Position vehicles so that jump leads will reach, ensuring that vehicles **DO NOT TOUCH,** alternatively a fully charged slave battery may be positioned on floor adjacent to vehicle.
2. Ensuring that ignition and all electrical accessories are switched off, that parking brake is applied and neutral is selected, connect the jump leads as follows;

A. Connect one end of first jumper cable to positive (+) terminal of booster battery.
B. Connect other end of first jumper cable to positive (+) terminal of discharged battery.
C. Connect one end of second jumper cable to negative terminal of booster battery.
D. Connect other end of second jumper cable to a good earth point on the disabled vehicle (eg. engine front lifting eye, as shown in J6086), **NOT TO NEGATIVE TERMINAL OF DISCHARGED BATTERY.** Keep jumper lead away from moving parts, pulleys, drive belts and fan blade assembly.

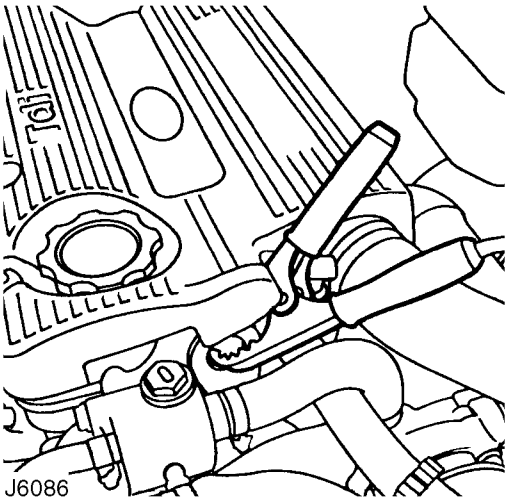

WARNING: Making final cable connection could cause an electrical arc which if made near battery could cause an explosion.

3. If booster battery is installed in another vehicle, start engine and allow to idle.
4. Start engine of vehicle with discharged battery, following starting procedure in Owners' Manual.

CAUTION: If vehicle fails to start within a maximum time of 12 seconds, switch ignition off and investigate cause. Failing to follow this instruction could result in irrepairable damage to catalyst, if fitted.

5. Remove negative (-) jumper cable from the engine and then terminal of booster battery.
6. Remove positive (+) jumper cable from positive terminals of booster battery and discharged battery.

ABBREVIATIONS AND SYMBOLS USED IN THIS MANUAL

Across flats (bolt size) ..... AF
After bottom dead centre ..... ABDC
After top dead centre ..... ATDC
Alternating current ..... a.c.
Ampere ..... amp
Ampere hour ..... amp hr
Before bottom dead centre ..... BBDC
Before top dead centre ..... BTDC
Bottom dead centre ..... BDC
Brake horse power ..... bhp
British Standards ..... BS
Carbon monoxide ..... CO
Centimetre ..... cm
Centigrade (Celsius) C
Cubic centimetre ..... cm^3
Cubic inch ..... in^3
Degree (angle) ..... deg or °
Degree (temperature) ..... deg or °
Diameter ..... dia.
Direct current ..... d.c.
Electronic Control Unit ..... ECU
Fahrenheit ..... F
Feet ..... ft
Feet per minute ..... ft/min
Fifth 5th
First 1st
Fluid ounce ..... fl oz
Foot pounds (torque) ..... lbf.ft
Fourth 4th
Gramme (force) ..... gf
Gramme (mass) ..... g
Gallons ..... gal
High tension (electrical) ..... H.T.
Internal diameter ..... I.D.
Inches of mercury ..... in. Hg
Inches ..... in
Kilogramme (force) ..... kgf
Kilogramme (mass.) ..... kg
Kilogramme centimetre (torque) ..... kgf.cm
Kilogramme per square millimetre ..... kgf/mm^2
Kilogramme per square centimetre ..... kgf/cm^2
Kilogramme metres (torque) ..... kgf.m
Kilometres ..... km
Kilometres per hour ..... km/h
Kilovolts ..... kV
Left-hand ..... LH
Left-hand steering ..... LHStg
Left-hand thread ..... LHThd
Litres ..... litre
Low tension ..... l.t.
Maximum ..... max.
Metre ..... m
Millilitre ..... ml
Millimetre ..... mm
Miles per gallon ..... mpg
Miles per hour ..... mph
Minute (angle) ..... ’
Minus (of tolerance) ..... -
Negative (electrical) ..... -
Newton metres (torque) ..... Nm
Number ..... No.
Ohms ..... ohm
Ounces (force) ..... ozf
Ounces (mass) ..... oz
Outside diameter ..... O.D.
Part number ..... Part No.
Percentage ..... %
Pints ..... pt
Plus (tolerance) ..... +
Positive (electrical) ..... +
Pound (force) ..... lbf
Pounds inch (torque) ..... lbf.in
Pound (mass) ..... lb
Pounds per square inch ..... P.S.I.
Ratio ..... :
Reference ..... ref.
Revolution per minute ..... rev/min
Right-hand ..... RH
Second (angle) ..... "
Second (numerical order) 2nd
Specific gravity ..... sp.gr.
Square centimetres ..... cm^2
Square inches ..... in^2
Standard wire gauge ..... s.w.g.
Synchroniser/Synchromesh ..... synchro.
Third 3rd
Top dead centre ..... TDC
United Kingdom ..... UK
Vehicle Identification Number ..... VIN
Volts V
Watts ..... W

SCREW THREADS

British Standard Pipe ..... BSP
Unified Coarse ..... UNC
Unified Fine ..... UNF

CROSS REFERENCE OF EMISSION SYSTEM TERMINOLOGY

NEW TERM	(ACRONYM)
Accelerator pedal	(AP)
Air cleaner	(ACL)
Air conditioning	(A/C)
Battery positive voltage	(B+)
Closed loop	(CL)
Closed throttle position	(CTP)
Canister purge valve	(CANPV)
Data link connector	(DLC)
Diagnostic trouble code	(DTC)
Distributor ignition	(DI)
Engine control module	(ECM)
Engine coolant level	(ECL)
Engine coolant temperature	(ECT)
Engine speed	(RPM)
Evaporative emission system	(EVAP)
Engine fuel temperature sensor	(EFTS)
4th gear, 3rd gear etc.	(4GR, 3GR)
Fuel pump	(FP)
Fan control module	(FCM)
Generator	(GEN)
Ground	(GND)
Heated oxygen sensor	(H02S)
Idle air control	(IAC)
Idle air control valve	(IACV)
Ignition control module	(ICM)
Intake air temperature	(IAT)
Manifold vacuum zone	(MVZ)
Mass air flow sensor	(MAF)
Open loop	(OL)
Relay module	(RM)
Solid state relay module	(SSRM)
Three way catalytic converter	(TWC)
Throttle body	(TB)
Throttle position sensor	(TP)
Transmission range	(TR)
Wide open throttle	(WOT)

OLD TERM	(ACRONYM)
Throttle pedal	(-)
Air cleaner	(-)
Air conditioning	(AC)
Battery plus, bat +, bat feed	(B+)
Closed loop	(-)
Closed throttle, idle position	(-)
Charcoal canister purge valve	(-)
Serial link	(-)
Fault code	(-)
Electronic ignition	(-)
Electronic control unit	(ECU)
Coolant level	(-)
Coolant temperature	(temp)
Coolant temperature thermistor	(-)
Engine speed	(rev/min)
Evaporative loss system	(ELC)
Fuel temperature thermistor	(-)
Fourth gear, 3rd gear	(-)
Fuel pump	(-)
Condenser fan timer	(-)
Alternator	(-)
Ground, earth	(B-)
Lambda (02) sensor	(-)
Idle speed control	(ISC)
Stepper motor	(-)
Ignition module	(-)
Intake temperature/ambient temperature	(-)
Manifold depression, vacuum	(-)
Air flow meter	(-)
Fault code display unit	(-)
Open loop	(-)
Relay	(-)
Control unit	(-)
Catalyst, catalytic converter	(CAT)
Throttle housing	(-)
Transmission gear	(-)
Full throttle, wide open throttle	(WOT)

VEHICLE IDENTIFICATION NUMBER (VIN)

The Vehicle Identification Number and the recommended maximum vehicle weights are stamped on a plate riveted to the brake pedal box in the engine compartment. The VIN is also stamped on a plate visible through the LH side of the windscreen.

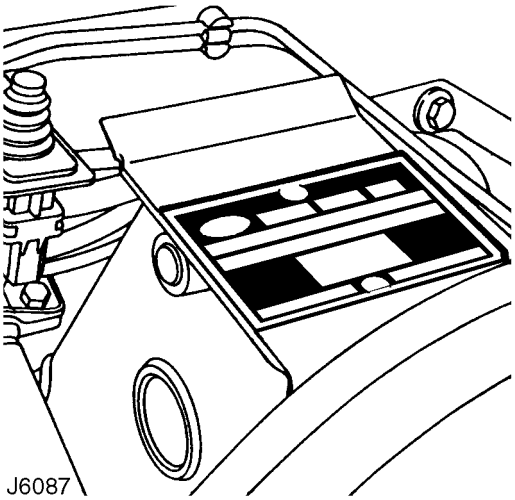
J6087

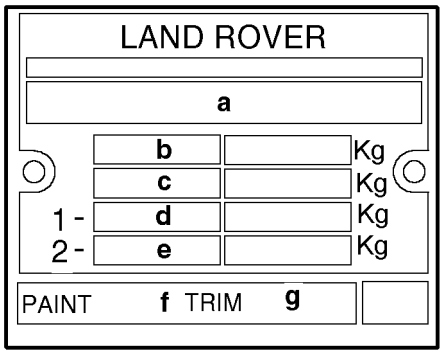

M01 0113B

a. Identification
b. Maximum permitted laden weight for vehicle
c. Maximum vehicle and trailer weight
d. Maximum road weight-front axle
e. Maximum road weight-rear axle
f. Paint code
g. Trim level

The number is also stamped on the RH side of the chassis to the rear of the front lashing eye, see J6089.

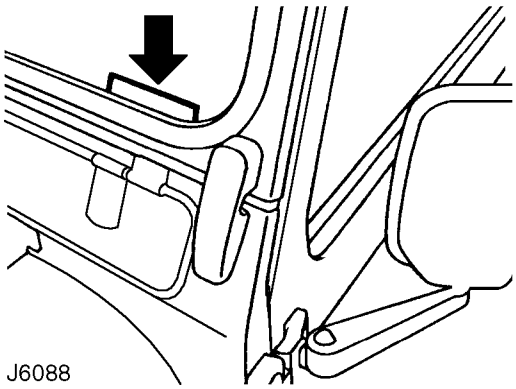
J6088

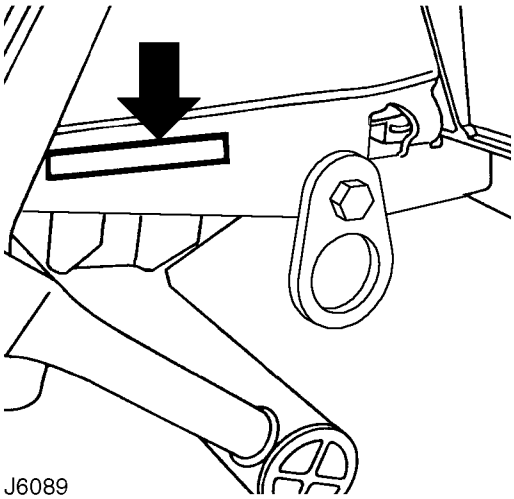
J6089

The Vehicle Identification Number identifies the manufacturer, model range, wheel base, body type, engine, steering, transmission, model year and place of manufacture. The following example shows the coding process.

SAL LD H M 8 7 X A

SAL = World manufacturer identifier
LD = Land Rover Defender
H = 110 inch, **V**= 90inch, **K**= 130 inch
M = 4 door Station Wagon, **A**= 90 Soft Top, Hard Top, Pick-up, **B**= 2 door Station Wagon, **E**= 2 door 130 Crew cab, **F**= 4 door 130 Crew cab, **H**= 130 High Capacity Pick-up
8= Td5 engine.
7= RH drive, 5 speed manaul, **8**= LH drive, 5 speed manual
X= 1999 MY, volume build.
A= Solihull build, **F**= CKD, assembled locally from kit

LOCATION OF IDENTIFICATION NUMBERS

Engine serial number - Td5 Engine

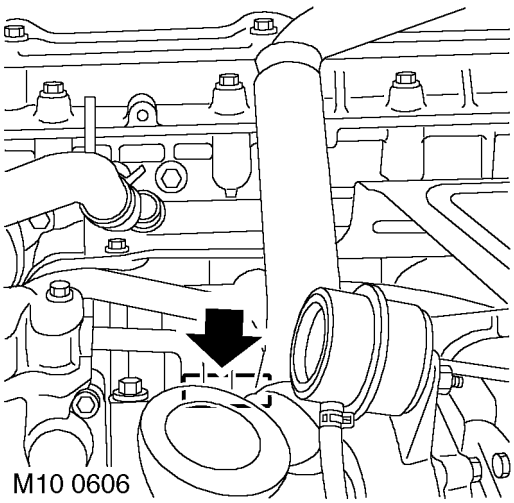

The Td5 engine number is stamped on the LH side of the cylinder block, below the exhaust manifold.

Main gearbox R380 serial number

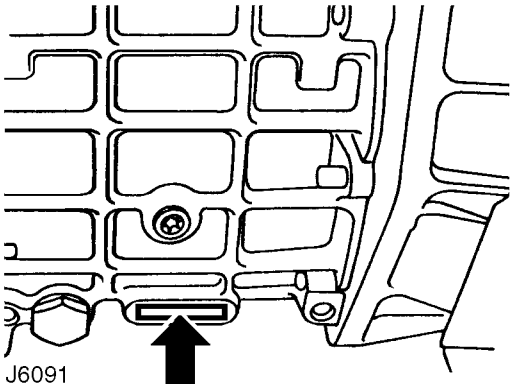

Stamped on a cast pad on the bottom RH side of the gearbox.

Transfer gearbox LT230 serial number

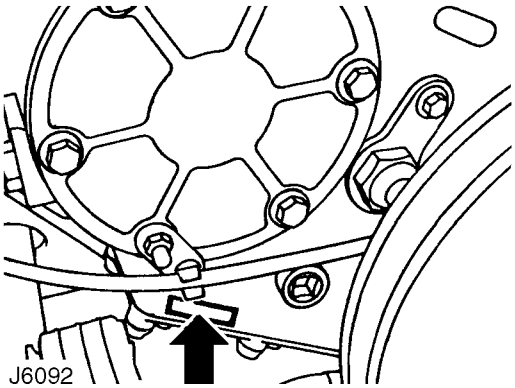

The serial number is stamped on the LH side of the gearbox casing below the mainshaft rear bearing housing adjacent to the bottom cover.

Front axle serial number

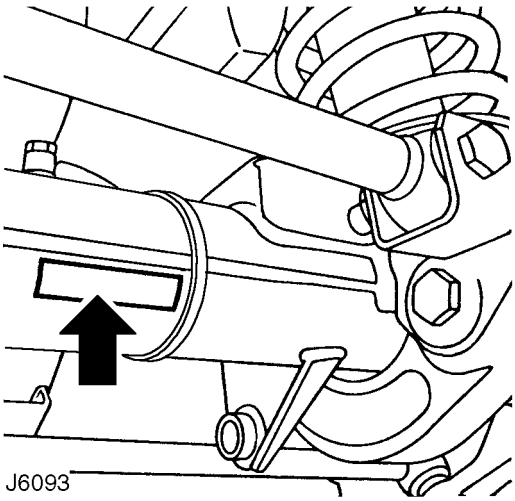

Stamped on the front of LH axle tube, inboard of radius arm mounting bracket.

Rear axle serial number

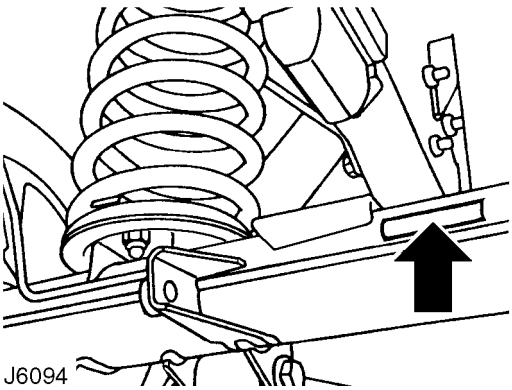

Stamped on the rear of LH axle tube, inboard of spring mounting.

FAULT DIAGNOSTIC EQUIPMENT

TESTBOOK

For Defender models fitted with the vehicle Anti-theft Immobilisation and Alarm System, diagnostic equipment, named TestBook, is available to assist in the diagnostic and fault finding abilities of the Dealer workshop. A diagnostic connector, located under the front centre seat, or cubby box, as shown below, is provided to facilitate the procedures.

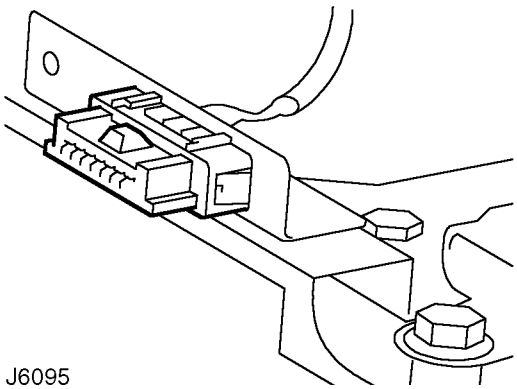

If an exhaust gas recirculation (EGR) system is fitted, this too can be checked using TestBook. A diagnostic connector, also located under the front centre seat or cubby box, is provided.

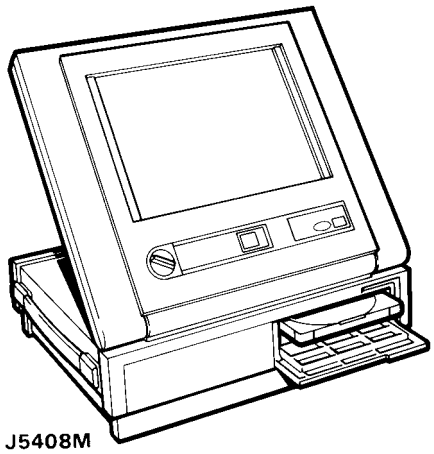

Features of Testbook include :-

Fully upgradable support for the technician.
Structured diagnostics to accommodate all skill levels.
Touch screen operation.
Direct print out of screen information and test results.

READING THIS SUPPLEMENT

This Supplement is divided into sections shown on the contents page, alongside a range of icons, familiar to service technicians.

Relevant information is contained within each of these sections. These are further divided into the following sub-sections which appear at the foot of each page :-

Description and operation.
Adjustment.
Repair.
Overhaul.

To avoid repeating information through the sections, where part of the repair operation impacts on another section, a cross reference is given to direct the reader to where the information is sited.

For example:
The maintenance section states the need to renew drive belt. A cross reference sites this information in:
Section 12 Engine
- Sub-section: Repair

04 - GENERAL SPECIFICATION DATA

CONTENTS

Page

INFORMATION

ENGINE - Td5 1
FUEL SYSTEM - Td5 3
COOLING SYSTEM - Td5 3
CLUTCH - Td5 3
TRANSMISSION - Td5 4
STEERING 5
SUSPENSION 6
ROAD SPRING DATA 6
SHOCK ABSORBERS 7
BRAKES 7
AIR CONDITIONING 8
WIPER MOTORS 8
ELECTRICAL 8
BULBS 9
VEHICLE WEIGHTS AND PAYLOAD 10
TOWING WEIGHTS 11
OFF-ROAD PERFORMANCE 11
TYRE SIZE AND PRESSURES 12
WHEELS 12
VEHICLE DIMENSIONS 13

ENGINE - Td5

Type	2.5 litre in-line direct injection Diesel, turbocharged and intercooled
Number of cylinders	5 in-line, No. 1 cylinder at front of engine
Bore	84.450 mm (3.3248 in)
Stroke	88.950 mm (3.5020 in)
Capacity	2498 cm^3(152.5 in^3)
Firing order	1 - 2 - 4 - 5 - 3
Compression ratio	19.5:1
Direction of rotation	Clockwise viewed from the front of the engine.
Dimensions	
Length	766 mm (30.1 in)
Width	708 mm (27.8 in)
Height	788 mm (31.0 in)
Emissions standard :-	
Engine Serial No. Prefixes 10P to 14P - EU2 Model	ECD 2
Engine Serial No. Prefixes 15P to 19P - EU3 Model	ECD 3

Lubrication

Type	Wet sump, pressure fed
Pump type	Eccentric rotor, crankshaft driven integral with stiffener plate.
Filter type:	
Primary	Centrifuge filter
Secondary	Disposable canister with full flow by-pass
Pressure at idle (cold)	3.0 bar (43.5 $lbf.in^2$)
Pressure at 3500 rev/min (hot)	1.5 - 3.0 bar (21.75 - 43.5 $lbf.in^2$)
Relief valve opening pressure	4.0 bar (58 $lbf.in^2$)
Low oil pressure switch opening pressure	0.2 - 0.6 bar (3.0 - 8.8 $lbf.in^2$)

Crankshaft

Main bearing journal diameter	61.9875 - 62.0125 mm
Crankpin journal diameter	53.99 - 54.01 mm
Crankshaft end float	0.020 - 0.250 mm

Main bearings

Number and type	6 half shells (5 main, 1 thrust)

Pistons

Type	Graphite compound skirt with combustion chamber in crown.
Clearance in cylinder bore	0.172 - 0.206 mm (measured at bottom of skirt, 90° to gudgeon pin)
Diameter	84.270 - 85.254 mm (measured 90° to gudgeon pin, and 40.00 mm from bottom of skirt.)

Gudgeon pins

Type ..... Fully floating, offset towards piston thrust side.

Piston rings

Type
- Upper compression ..... Barrel edge, chrome plated
- Lower compression ..... Taper faced
- Oil control ..... Bevelled ring with spring

New ring to groove clearance
- Upper compression ..... Not measured
- Lower compression ..... 0.050 - 0.082 mm (0.002 - 0.003 in)
- Oil control ..... 0.050 - 0.082 mm (0.002 - 0.003 in)

Piston ring fitted gap in cylinder bore
- Upper compression ..... 0.30 - 0.45 mm (0.0118 - 0.0177 in)
- Lower compression ..... 0.40 - 0.60 mm (0.0157 - 0.0236 in)
- Oil control ..... 0.25 - 0.40 mm (0.0098 - 0.0157 in)

Camshaft

Drive ..... Duplex chain
End float ..... 0.6 - 0.16 mm
Number of bearings 6

Tappets

Type ..... Hydraulic lash adjusters with followers

Valves

Stem diameter
- Exhaust ..... 6.905 ± 0.008 mm (0.271 ± 0.0003 in)
- Inlet ..... 6.915 ± 0.008 mm (0.272 ± 0.0003 in)

Head diameter
- Exhaust ..... 31.7 mm (1.25 in)
- Inlet ..... 34.7 mm (1.37 in)

Seat face angle
- Exhaust ..... 45°
- Inlet ..... 30°

Valve face angle
- Exhaust ..... 44°48’ ± 12’
- Inlet ..... 29°48’ ± 12’

Valve springs

Type ..... Parallel, single coil

FUEL SYSTEM - Td5

Type	Direct injection from pressure regulated supply with cooled return flow
Pressure regulator setting	4 bar (58 lbf.in^2)
Pump	Electric two stage submersible
Pump output	
Low pressure	30 l/h (6.6 gal/h) at 0.5 bar (7.25 lbf.in^2)
High pressure	180 l/h (39.6 gal/h) at 4 bar (58 lbf.in^2)
Max consumption	30 l/h (6.6 gal/h)
Injectors	Electronic unit injectors
Injector normal operating pressure	1500 bar (21750 lbf.in^2)
Filter	In-line canister filter/water separator with water detection

COOLING SYSTEM - Td5

Type	Pressurised spill return partial flow, thermostatically controlled
Cooling fans	11 blade axial flow on viscous coupling and 11 blade axial flow electric
Electric cooling fan switching points	
On	Vehicle speeds of 50 mph (80 km/h) and below while ambient temperature is 28°C (82°F) or above
Off	Vehicle speeds of 62.5 mph (100 km/h) and above or ambient temperatures of 25°C (77°F) and below
Coolant pump	Centrifugal impeller, belt driven from crankshaft
Thermostat	Waxstat with pressure relief valve
Thermostat opening temperature	
Initial opening	82°C (179°F)
Fully open	96°C (204°F)
Expansion tank cap relief valve operating pressure	1.4 bar (20.3 lbf.in^2)

CLUTCH - Td5

Type	Diaphragm spring, hydraulically operated with self-centering pre-loaded release bearing
Drive plate diameter	267 mm
Pressure plate diameter	270 mm

TRANSMISSION - Td5

Main gearbox

Type R380	Single helical constant mesh
Speeds	5 forward, 1 reverse, all synchromesh

Transfer box

Type LT230TE	Two speed reduction on main gearbox output. Front and rear drive permanently engaged via a lockable differential

Rear axle

Type	Spiral bevel, fully floating shafts
Ratio	3.54:1

Front axle

Type	Spiral bevel, enclosed constant velocity joints, fully floating shafts, 32° angularity of universal joint on full lock
Ratio	3.54:1

Propeller shafts

Type, front and rear	Tubular 51 mm dia.
Universal joints	Open type Hookes O3EHD

STEERING

Power steering box

Make/type	Adwest Varamatic - worm and roller box
Ratio	Variable: straight ahead 19.3:1 on lock 14.3:1
Steering wheel turns, lock-to-lock	3.375

Steering pump

Make/type	Hobourn-Eaton series 500

Steering geometry

Steering wheel diameter	412 mm (16.22 in)
Toe-out measurement	0 to 2 mm toe out
Toe-out included angle	0° to 0° 20’
Camber angle	0° *
Castor angle	3° *
Swivel pin inclination static	7° *

* Check with vehicle on level ground, in unladen condition and five gallons of fuel. Rock the front of the vehicle up and down to allow it to take up a normal static position.

Turning circle between kerbs

90 models:

265/75 x 16 tyres	12,65 m (41.5 ft)
All other tyres	11,70 m (38.4 ft)

110 models:

750 x 16 tyres	13,41 m (44 ft)

130 models:

750 x 16 tyres	15,24 m (50 ft)

SUSPENSION

Type	Coil springs controlled by telescopic dampers front and rear.
Front	Transverse location of axle by Panhard rod, and fore and aft location by two radius arms. Anti-roll bar fitted as standard on 90 models with 265/75 tyres and 130 models.
Rear	Fore and aft movement inhibited by two tubular trailing links. Lateral location of axle by a centrally positioned 'A' frame, upperlink assembly, bolted at the apex to a ball joint mounting. Anti-roll bar fitted as standard on 90 models with 265/75 tyres, 110 models with self levelling unit, and 130 models.

ROAD SPRING DATA

	Part No.	Colour Code
90 (2400 Kg)		
Front - Driver's side	NRC 9446	Blue/green
Front - Passenger side	NRC 9447	Blue/yellow
Rear - Driver's side	NRC 9448	Blue/red
Rear - Passenger side	NRC 9449	Yellow/white
90 (2550 Kg)		
Front - Driver's side	NRC 9446	Blue/green
Front - passenger side	NRC 9447	Blue/yellow
Rear - Driver's side	NRC 9462	Green/yellow/red
Rear - Passenger side	NRC 9463	Green/yellow/white
110 (3050 Kg)		
Front - both sides	NRC 8045	Yellow/yellow
Rear - both sides	NRC 6904	Red/green
110 Levelled (2950 Kg)		
Front - both sides	NRC 8045	Yellow/yellow
Rear - both sides	NRC 7000	Green/white
110 (3400 Kg)		
Front - both sides	NRC 8045	Yellow/yellow
Rear - both sides	NRC 6904	Red/green
Rear helper springs - both sides	RRC 3266	No colour code
110 (3600 Kg)		
Front - Driver's side	NRC 9448	Blue/red
Front - passenger side	NRC 9449	Yellow/white
Rear - both sides	NRC 6904	Red/green
Rear helper springs - both sides	RRC 3226	No colour code
130 (3500 Kg)		
Front - driver's side	NRC 9448	Blue/red
Front - passenger side	NRC 9449	Yellow/white
Rear - driver's side	NRC 6389	Red/red
Rear - passenger side	NRC 6904	Red/green
Front/rear helper springs - both sides	RRC 3266	No colour code

SHOCK ABSORBERS

Type	Telescopic, double-acting non-adjustable
Bore diameter	35.47mm

BRAKES

Front brake

Caliper	AP Lockheed, four opposed pistons
Operation	Hydraulic, self adjusting
Disc	90 - Solid, outboard, 110/130 - Ventilated, outboard
Disc diameter	298 mm (11.73 in)
Disc thickness	90 - 14,1 mm (0.56in), 110/130 - 24mm (0.95 in)
Wear limit	1 mm (0.04in) per side of disc
Disc run-out maximum	0,15mm (0.006 in)
Pad area	58 cm^2 (9.0 in^2)
Total swept area	801,3 cm^2 (124.2 in^2)
Pad material	Ferodo 3440 non asbestos
Pad minimum thickness	3 mm (0.12in)

Rear brake

Caliper	AP Lockheed opposed piston
Operation	Hydraulic, self adjusting
Disc	Solid, outboard
Disc diameter	90 - 290 mm (11.42 in), 110/130 - 298 mm (11.73)
Disc thickness	90 - 12,5 mm (0.49 in), 110/130 - 14,1 mm (0.56 in)
Wear limit	90 - 0,38 mm (0.015 in), 110/130 - 1,0 mm (0.04 in) per side of disc
Disc run-out maximum	0,15 mm (0.006 in)
Pad area	90 - 30,5 cm^2 (4.37 in^2), 110/130 - 36,2 cm^2 (5.61 in^2)
Total swept area	90 - 694 cm^2 (106.98 in^2)
Pad material	Ferodo 3440 non asbestos
Pad minimum thickness	UP TO 02MY - 3 mm (0.12 in)
Pad minimum thickness	From 02MY - 2 mm (0.08 in)

Parking brake

Type	Mechanical, cable operated drum brake on the rear of the transfer gearbox output shaft
Drum internal diameter	254 mm (10.0 in)
Width	70 mm (2.75 in)
Pad material	Ferodo 3611 non asbestos

Servo/master cylinder

Manufacturer	Lucas
Servo type	LSC 80
Master cylinder type	25,4 mm (1.0 in) diameter, tandem
Pressure reducing valve, failure conscious	Cut-in pressure, 90 - 24 bar (360 lbf/in^2) ratio 4.0:1, 110 - 43 bar (645 lbf/in^2) ratio 2.9:1*

NOTE: * Pressure reducing valves are not fitted to all 110 specifications.

AIR CONDITIONING

System	CFC free, expansion valve system
Compressor	Nippon Denso
Refrigerant	R134a CFC free
Charge quantity	750 g ± 50 g
Refrigerant oil	ND-OIL 8

WIPER MOTORS

Tailgate wiper motor

Make/type	IMOS (non-serviceable)
Running current, wet screen at 20°C ambient	1.0 to 2.8 amps
Wiper speed, wet screen at 20°C ambient	37 to 43 cycles per minute

Windscreen wiper motor

Make/type	Lucas 14W uprated two speed
Armature end float	0,1 to 0,2 mm
Brush length, minimum	4,8 mm
Brush spring tension	140 to 200 g
Resistance of armature winding at 16˚C (69˚F) measured between adjacent commutatator segments	0.23 to 0.35 ohms
Light running, rack disconnected: current at 13.5 V	2.0 amps
Wiper speed, wet screen, 60 seconds from cold	Low speed - 45 ± 3 rev/min, High speed - 65 ± 5 rev/min

ELECTRICAL

System	12 volt, negative ground

Battery

Make/type	Delphi GP31

Alternator

Type	Nippon Denso

Fuses

Type	Autofuse (blade type) blow ratings to suit individual circuits

Horns

Make/type	Mixo TR99

Starter motor

Make and type	Bosch 12v

BULBS

REPLACEMENT BULBS	TYPE		
Headlamps	12V	60/55W	Halogen
Front side lamps	12V	5W	
Side repeater lamps	12V	5W	
Tail lamps	12V	21W	
Cente High Mounted Stop Lamp	12V	21W	
Direction indicator lamps	12V	21W	
Number plate lamp	12V	4W	
Reverse lamp	12V	21W	
Rear fog guard lamp	12V	21W	
Interior roof lamps	12V	10W	
Instrument illumination	12V	1.2W	
Warning light panel	12V	1.2W	
Hazard warning switch	12V	1.2W	

CAUTION: The fitting of new bulbs with wattages in excess of those specified will result in damage to vehicle wiring and switches.

VEHICLE WEIGHTS AND PAYLOAD

When loading a vehicle to its maximum (Gross Vehicle Weight), consideration must be taken of the unladen vehicle weight and the distribution of the payload to ensure that axle loadings do not exceed the permitted maximum values.

It is the customer's responsibility to limit the vehicle's payload in an appropriate manner such that neither maximum axle loads nor Gross Vehicle Weight are exceeded.

Maximum EEC kerb weight and distribution - all optional equipment

VEHICLE AXLE WEIGHTS

90 models	**Station Wagon**	**Utility**
Front axle	1200 Kg (2645 lb)	1200 Kg (2645 lb)
Rear axle	1500 kg (3307 lb)	1500 Kg (3307 lb)
Gross vehicle weight	2550 Kg (5291 lb)	2400 Kg (5622 lb)

110 models	**Station Wagon**	**Utility**
Front axle	1200 Kg (2645 lb)	1200 Kg (2645 lb)
Rear axle	1750 Kg (3858 lb)	1850 Kg (4078 lb)
Gross vehicle weight	2950 Kg (6503 lb)	3050 Kg (6724 lb)

130 models	**Utility**
Front axle	1580 Kg (3483 lb)
Rear axle	2200 Kg (4850 lb)
Gross vehicle weight	3500 Kg (7716 lb)

NOTE: Axle weights are not accumulative. The individual maximum axle weights and gross vehicle weight must not be exceeded.

EEC VEHICLE KERB WEIGHTS

90 models	**Standard**	**Heavy Duty**
Soft top:	1770 Kg (3402 lb)	1993 Kg (4393 lb)
Pick-up:	1770 Kg (3402 lb)	1993 Kg (4393 lb)
Hard top:	1815 Kg (4001 lb)	1987 Kg (4380 lb)
Station wagon:	1870 Kg - 1885 Kg (4122 lb - 4155 lb)	1989 Kg - 1998 Kg (4385 lb - 4404 lb)

110 models		
Soft top:	1885 Kg - 2080 Kg	(4155 lb - 4585 lb)
High capacity pick-up:	1920 Kg - 2122 Kg	(4232 lb - 4678 lb)
Hard top:	1920 Kg - 2110 Kg	(4232 lb - 4651 lb)
Station wagon:	2055 Kg - 2229 Kg	(4530 lb - 4914 lb)

130 models	
Crew cab and high capacity pick-up:	2177 Kg - 2286 Kg (4667 lb - 5039 lb)

EEC kerb weight = Unladen weight + Full fuel tank + 75 Kg (165 lb).

TOWING WEIGHTS

	On-road	Off-road
Unbraked trailers	750 Kg (1653 lb)	500 Kg (1102 lb)
Trailers with overrun brakes	3500 Kg (7716 lb)	1000 Kg (2204 lb)
4 wheel trailers with coupled brakes *	4000 Kg (8818 lb)	1000 Kg (2204 lb)

NOTE: * Only applies to vehicles modified to accept coupled brakes.

NOTE: All weight figures are subject to local restrictions.

OFF-ROAD PERFORMANCE

90 models

Max. gradient (EEC kerb weight) ..... 45°

Approach angle:
- Soft top and Pick-up (EEC kerb weight) ..... 48°
- Hard top and station wagon (EEC kerb weight) ..... 51.5°

Departure angle
- Soft top and Pick-up (EEC kerb weight) ..... 49°

Hard top and Station wagon (EEC kerb weight) ..... 53°

Wading depth ..... 500 mm (20 in)

Min. ground clearance (unladen):
- Soft top and pick-up ..... 191 mm (7.5 in)
- Hard top and station wagon ..... 229 mm (9.0 in)

NOTE: Departure angles do not account for the addition of a tow hitch.

110 and 130 models

Max. gradient (EEC kerb weight) ..... 45°

Approach angle (EEC kerb weight) ..... 50°

Departure angle (EEC kerb weight)

110 models ..... 35°

130 models ..... 34°

Wading depth ..... 500 mm (20 in)

Min. ground clearance (unladen ..... 215 mm (8.5 in)

NOTE: Departure angles do not account for the addition of a tow hitch.

TYRE SIZE AND PRESSURES

	Front	Rear
90 models		
Normal - all load conditions		
205/80 R16 Radial	1,9 bar 28 lbf/in^2 2,0 kgf/cm^2	2,6 bar 38 lbf/in^2 2,7 kgf/cm^2
265/75 R16 Radial (multi terrain)	1,9 bar 28 lbf/in^2 2,0 kgf/cm^2	2,4 bar 35 lbf/in^2 2,5 kgf/cm^2
7.50 R16 Radial	1,9 bar 28 lbf/in^2 2,0 kgf/cm^2	2,6 bar 38 lbf/in^2 2,7 kgf/cm^2
110 models		
Normal - all load conditions		
7.50 R16 Radial	1,9 bar 28 lbf/in^2 2,0 kgf/cm^2	3,3 bar 48 lbf/in^2 3,4 kgf/cm^2
130 models		
Normal - all load conditions		
7.50 R16 Radial	3,0 bar 44 lbf/in^2 3,1 kgf/cm^2	4,5 bar 65 lbf/in^2 4,6 kgf/cm^2

WARNING: Tyre pressures must be checked with the tyres cold, as the pressure is about 0,21 bar (3 lbf/in^2, 0,2 kgf/cm^2) higher at running temperature. If the vehicle has been parked in the sun or high ambient temperatures, DO NOT reduce the tyre pressures, move the vehicle into the shade and wait for the tyres to cool before checking the pressures.

WARNING: Always use the same make and type of radial-ply tyres, front and rear. DO NOT use cross-ply tyres, or interchange tyres from front to rear.

- **If the the wheel is marked 'TUBED', an inner tube MUST be fitted, even with a tubeless tyre.**
- **If the wheel is marked 'TUBELESS', an inner tube must NOT be fitted.**

WHEELS

90 models

Steel wheel size:

Heavy duty - UK and Western Europe	6.5F X 16
Other markets	5.5F X 16
Alloy wheel size	7J X 16

110 models

Steel wheel size:

Heavy duty - UK and Western Europe	6.5F X 16
Other markets	5.5F X 16

130 models

Steel wheel size:

Heavy duty - UK and Western Europe	6.5F X 16
Other markets	5.5F X 16

VEHICLE DIMENSIONS

90 models

Overall length:
- Soft top and Pick-up ..... 3722 mm (146.5 in)
- Hard top and Station wagon ..... 3883 mm (152.9 in)

Overall width: ..... 1790 mm (70.5 in)

Overall height:
- Soft top ..... 1965 mm (77.4 in)
- Pick-up and Station wagon ..... 1963 mm (77.3 in)
- Hard top ..... 1972 mm (77.6 in)

Wheelbase ..... 2360 mm (92.9 in)
Track front/rear ..... 1486 mm (58.5 in)
Width between wheel boxes ..... 925 mm (36.4 in)

110 models

Overall length:
- Soft top and Pick-up ..... 4438 mm (175 in)
- High capacity pick-up ..... 4631 mm (182 in)
- Hard top/Station and County ..... 4599 mm (181 in)

Overall width: ..... 1790 mm (70.5 in)
Overall height: ..... 2035 mm (80.1 in)
Wheelbase ..... 2794 mm (110 in)
Track front/rear ..... 1486 mm (58.5 in)

Width between wheel boxes:
- High capacity pick-up ..... 1090 mm (43 in)
- all other models ..... 925 mm (36.4 in)

130 models

Overall length ..... 5132 mm (202 in)
Overall width ..... 1790 mm (70.5 in)
Overall height ..... 2035 mm (80.1 in)
Wheelbase ..... 3226 mm (127 in)
Track front/rear ..... 1486 mm (58.5 in)
Width between wheel boxes ..... 1090 mm (43 in)

05 - ENGINE TUNING DATA

CONTENTS

Page

INFORMATION

ENGINE - Td5 1
HEATER PLUGS - Td5 1
INJECTORS - Td5 1
TURBOCHARGER - Td5 1

ENGINE - Td5

Type	2.5 Litre direct injection Diesel, turbocharged, intercooled
Firing order	1 - 2 - 4 - 5 - 3
Injection timing	Controlled by ECM
Maximum governed speed	4850 rev/min
Maximum overrun speed	5460 rev/min
Idle speed	740 ± 50 rev/min

HEATER PLUGS - Td5

Make & type	Beru 12 V.
Number of plugs	Four plugs only, in cylinders 1, 2, 3 and 4

INJECTORS - Td5

Injectors

Make/Type	Lucas EV1
Nominal operating pressure	1500 bar (21750 lbf.in^2)

TURBOCHARGER - Td5

Make & type	Garrett GT 20

07 - GENERAL FITTING REMINDERS

CONTENTS

Page

INFORMATION

GENERAL FITTING REMINDERS 1
PRECAUTIONS AGAINST DAMAGE 1
SAFETY PRECAUTIONS 1
PREPARATION 2
DISMANTLING 2
INSPECTION-GENERAL 2
BALL AND ROLLER BEARINGS 3
OIL SEALS 4
JOINTS AND JOINT FACES 5
FLEXIBLE HYDRAULIC PIPES, HOSES 5
FUEL SYSTEM HOSES 6
METRIC BOLT IDENTIFICATION 6
METRIC NUT IDENTIFICATION 6
KEYS AND KEYWAYS 6
TAB WASHERS 6
COTTER PINS 7
NUTS 7
LOCKING WIRE 7
SCREW THREADS 7
UNIFIED THREAD IDENTIFICATION 7

GENERAL FITTING REMINDERS

WORKSHOP SAFETY IS YOUR RESPONSIBILITY!

The suggestions, cautions and warnings in the section are intended to serve as reminders for trained and experienced mechanics. This manual is not a definitive guide to automotive mechanics or workshop safety.

Shop equipment, shop environment, and the use and disposal of solvents, fluids, and chemicals are subject to government regulations which are intended to provide a level of safety. It is your responsibility to know and comply with such regulations.

PRECAUTIONS AGAINST DAMAGE

1. Always fit covers to protect fenders before commencing work in engine compartment.
2. Cover seats and carpets, wear clean overalls and wash hands or wear gloves before working inside vehicle.
3. Avoid spilling hydraulic fluid or battery acid on paint work. Wash off with water immediately if this occurs. Use Polythene sheets to protect carpets and seats.
4. Always use a recommended Service Tool where specified.
5. Protect temporarily exposed screw threads by replacing nuts or fitting plastic caps.

SAFETY PRECAUTIONS

1. Whenever possible, use a lift when working beneath vehicle, in preference to jacking. Chock wheels as well as applying parking brake.

WARNING: Do not use a pit when removing fuel system components.

2. Never rely on a jack alone to support vehicle. Use axle stands carefully placed at jacking points to provide rigid support.
3. Ensure that a suitable form of fire extinguisher is conveniently located.
4. Check that any lifting equipment used has adequate capacity and is fully serviceable.
5. Disconnect battery.

WARNING: Do not disconnect any pipes in air conditioning system, unless trained and instructed to do so. A refrigerant is used which can cause blindness if allowed to contact eyes.

6. Ensure that adequate ventilation is provided when volatile degreasing agents are being used.
7. Do not apply heat in an attempt to free stiff fixings; as well as causing damage to protective coatings, there is a risk of damage to electronic equipment and brake linings from stray heat.

PREPARATION

1. Clean components and surrounding area prior to removal.
2. Blank off any openings exposed by component removal using greaseproof paper and masking tape.
3. Immediately seal fuel, oil or hydraulic lines when separated, using plastic caps or plugs, to prevent loss of fluid and entry of dirt.
4. Close open ends of oilways, exposed by component removal, with tapered hardwood plugs or readily visible plastic plugs.
5. Immediately a component is removed, place it in a suitable container; use a separate container for each component and its associated parts.
6. Before dismantling a component, clean it thoroughly with a recommended cleaning agent; check that agent is suitable for all materials of component.
7. Clean bench and provide marking materials, labels, containers and locking wire before dismantling a component.

DISMANTLING

1. Observe scrupulous cleanliness when dismantling components, particularly when brake, fuel or hydraulic system parts are being worked on. A particle of dirt or a cloth fragment could cause a dangerous malfunction if trapped in these systems.
2. Blow out all tapped holes, crevices, oilways and fluid passages with an air line. Ensure that any O-rings used for sealing are correctly replaced or renewed, if disturbed.
3. Use marking ink to identify mating parts, to ensure correct reassembly. If a centre punch or scriber is used they may initiate cracks or distortion of components.
4. Wire together mating parts where necessary to prevent accidental interchange (e.g. roller bearing components).
5. Wire labels on to all parts which are to be renewed, and to parts requiring further inspection before being passed for reassembly; place these parts in separate containers from those containing parts for rebuild.
6. Do not discard a part due for renewal until it has been compared with the new part, to ensure that its correct replacement has been obtained.

INSPECTION-GENERAL

1. Never inspect a component for wear or dimensional check unless it is absolutely clean; a slight smear of grease can conceal an incipient failure.
2. When a component is to be checked dimensionally against figures quoted for it, use correct equipment (surface plates, micrometers, dial gauges, etc.) in serviceable condition. Makeshift checking equipment can be dangerous.
3. Reject a component if its dimensions are outside limits quoted, or if damage is apparent. A part may, however, be refitted if its critical dimension is exactly limit size, and is otherwise satisfactory.
4. Use ’Plastigauge’ 12 Type PG-1 for checking bearing surface clearances. Directions for its use, and a scale giving bearing clearances in 0,0025 mm steps are provided with it.

BALL AND ROLLER BEARINGS

CAUTION: Never refit a ball or roller bearing without first ensuring that it is in a fully serviceable condition.

1. Remove all traces of lubricant from bearing under inspection by washing in a suitable degreaser; maintain absolute cleanliness throughout operations.
2. Inspect visually for markings of any form on rolling elements, raceways, outer surface of outer rings or inner surface of inner rings. Reject any bearings found to be marked, since any marking in these areas indicates onset of wear.
3. Holding inner race between finger and thumb of one hand, spin outer race and check that it revolves absolutely smoothly. Repeat, holding outer race and spinning inner race.
4. Rotate outer ring gently with a reciprocating motion, while holding inner ring; feel for any check or obstruction to rotation, and reject bearing if action is not perfectly smooth.
5. Lubricate bearing generously with lubricant appropriate to installation.
6. Inspect shaft and bearing housing for discolouration or other marking suggesting that movement has taken place between bearing and seatings. (This is particularly to be expected if related markings were found in operation 2).
7. Ensure that shaft and housing are clean and free from burrs before fitting bearing.
8. If one bearing assembly of a pair shows an imperfection it is generally advisable to replace both with new bearings; an exception could be made if the faulty bearing had covered a low mileage, and it could be established that damage was confined to it only.

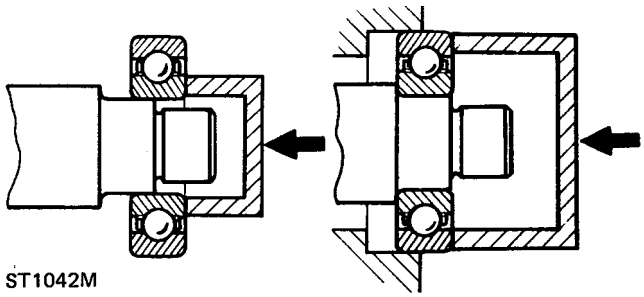

9. When fitting bearing to shaft, apply force only to inner ring of bearing, and only to outer ring when fitting into housing, as shown above.
10. In the case of grease lubricated bearings (e.g. hub bearings) fill space between bearing and outer seal with recommended grade of grease before fitting seal.
11. Always mark components of separable bearings (e.g. taper roller bearings) in dismantling, to ensure correct reassembly. Never fit new rollers in a used outer ring, always fit a complete new bearing assembly.

OIL SEALS

NOTE: Ensure that the seal running track is free from pits, scores, corrosion and general damage prior to fitting replacement seal.

1. Always fit new oil seals when rebuilding an assembly.
2. Carefully examine seal before fitting to ensure that it is clean and undamaged.
3. Coat the sealing lips with clean grease; pack dust excluder seals with grease, and heavily grease duplex seals in cavity between sealing lips.
4. Ensure that seal spring, if provided, is correctly fitted.

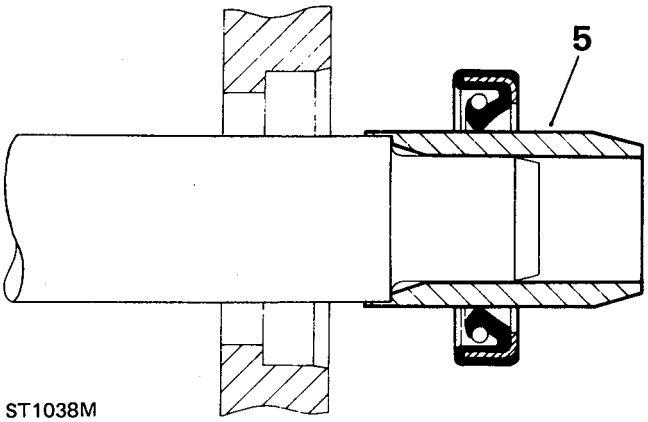

5. Place lip of seal towards fluid to be sealed and slide into position on shaft, using fitting sleeve when possible to protect sealing lip from damage by sharp corners, threads or splines. If fitting sleeve is not available, use plastic tube or tape to prevent damage to sealing lip.
6. Grease outside diameter of seal, place square to housing recess and press into position, using great care and if possible a 'bell piece' to ensure that seal is not tilted. In some cases it may be preferable to fit seal to housing before fitting to shaft. Never let weight of unsupported shaft rest in seal.

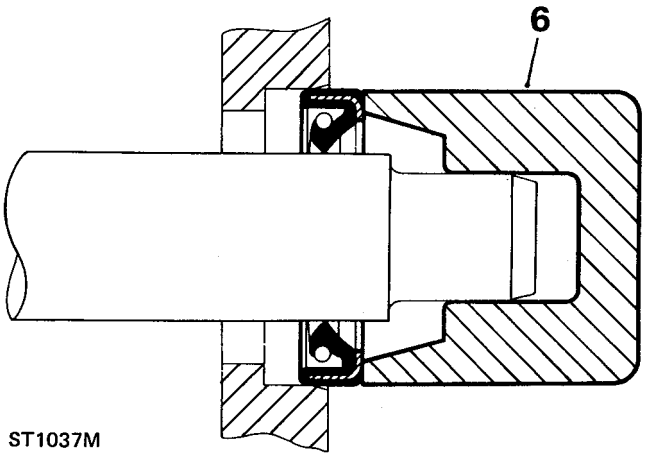

7. If correct service tool is not available, use a suitable drift approximately 0,4 mm (0.015 in) smaller than outside diameter of seal. Use a hammer **VERY GENTLY** on drift if a press is not suitable.
8. Press or drift seal in to depth of housing if housing is shouldered, or flush with face of housing where no shoulder is provided. Ensure that the seal does not enter the housing in a tilted position.

NOTE: Most cases of failure or leakage of oil seals are due to careless fitting, and resulting damage to both seals and sealing surfaces. Care in fitting is essential if good results are to be obtained. NEVER use a seal which has been improperly stored or handled, such as hung on a hook or nail.

JOINTS AND JOINT FACES

1. Always use correct gaskets where they are specified.
2. Use jointing compound only when recommended. Otherwise fit joints dry.
3. When jointing compound is used, apply in a thin uniform film to metal surfaces; take great care to prevent it from entering oilways, pipes or blind tapped holes.
4. Remove all traces of old jointing materials prior to reassembly. Do not use a tool which could damage joint faces.
5. Inspect joint faces for scratches or burrs and remove with a fine file or oil stone; do not allow removed material or dirt to enter tapped holes or enclosed parts.
6. Blow out any pipes, channels or crevices with compressed air, fit new 'O' rings or seals displaced by air blast.

FLEXIBLE HYDRAULIC PIPES, HOSES

1. Before removing any brake or power steering hose, clean end fittings and area surrounding them as thoroughly as possible.
2. Obtain appropriate plugs or caps before detaching hose end fittings, so that ports can be immediately covered to exclude dirt.
3. Clean hose externally and blow through with airline. Examine carefully for cracks, separation of plies, security of end fittings and external damage. Reject any hose found faulty.
4. When refitting hose, ensure that no unnecessary bends are introduced, and that hose is not twisted before or during tightening of union nuts.
5. Containers for hydraulic fluid must be kept absolutely clean.
6. Do not store brake fluid in an unsealed container. It will absorb water, and fluid in this condition would be dangerous to use due to a lowering of its boiling point.
7. Do not allow brake fluid to be contaminated with mineral oil, or use a container which has previously contained mineral oil.
8. Do not re-use brake fluid bled from system.
9. Always use clean brake fluid to clean hydraulic components.
10. Fit a cap to seal a hydraulic union and a plug to its socket after removal to prevent ingress of dirt.
11. Absolute cleanliness must be observed with hydraulic components at all times.
12. After any work on hydraulic systems, inspect carefully for leaks underneath the vehicle while a second operator applies maximum pressure to the brakes (engine running) and operates the steering.

FUEL SYSTEM HOSES

CAUTION: All fuel hoses are made up of two laminations, an armoured rubber outer sleeve and an inner viton core. If any of the fuel system hoses have been disconnected, it is imperative that the internal bore is inspected to ensure that the viton lining has not become separated from the amoured outer sleeve. A new hose must be fitted if separation is evident.

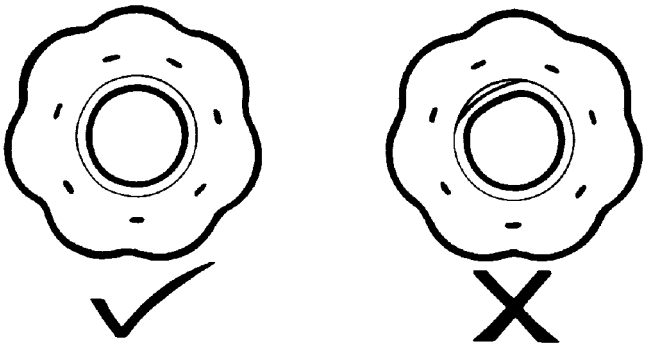

RR2302M

METRIC BOLT IDENTIFICATION

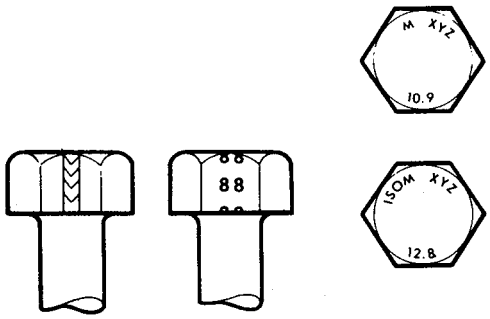

ST1035M

1. An ISO metric bolt or screw, made of steel and larger than 6 mm in diameter can be identified by either of the symbols ISO M or M embossed or indented on top of the head.
2. In addition to marks to identify the manufacture, the head is also marked with symbols to indicate the strength grade, e.g. 8.8, 12.9 or 14.9, where the first figure gives the minimum tensile strength of the bolt material in tens of kgf/mm^2.
3. Zinc plated ISO metric bolts and nuts are chromate passivated, a gold-bronze colour.

METRIC NUT IDENTIFICATION

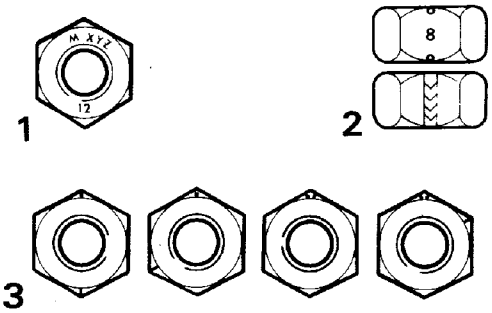

ST1036M

1. A nut with an ISO metric thread is marked on one face or on one of the flats of the hexagon with the strength grade symbol 8, 12 or 14. Some nuts with a strength 4, 5 or 6 are also marked and some have the metric symbol M on the flat opposite the strength grade marking.
2. A clock face system is used as an alternative method of indicating the strength grade. The external chamfers or a face of the nut is marked in a position relative to the appropriate hour mark on a clock face to indicate the strength grade.
3. A dot is used to locate the 12 O'clock position and a dash to indicate the strength grade. If the grade is above 12, two dots identify the 12 O'clock position.

KEYS AND KEYWAYS

1. Remove burrs from edges of keyways with a fine file and clean thoroughly before attempting to refit key.
2. Clean and inspect key closely; keys are suitable for refitting only if indistinguishable from new, as any indentation may indicate the onset of wear.

TAB WASHERS

1. Fit new washers in all places where they are used. Always fit a new tab washer.
2. Ensure that the new tab washer is of the same design as that replaced.

COTTER PINS

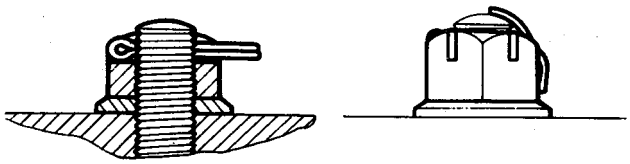

1. Fit new cotter pins throughout when replacing any unit.
2. Always fit cotter pins where cotter pins were originally used. Do not substitute spring washers: there is always a good reason for the use of a cotter pin.
3. All cotter pins should be fitted as shown unless otherwise stated.

NUTS

1. When tightening a slotted or castellated nut never loosen it to insert cotter pin or locking wire except in those recommended cases where this forms part of an adjustment. If difficulty is experienced, alternative washers or nuts should be selected, or washer thickness reduced.
2. Where self-locking nuts have been removed it is advisable to replace them with new ones of the same type.

NOTE: Where bearing pre-load is involved nuts should be tightened in accordance with special instructions.

LOCKING WIRE

1. Fit new locking wire of the correct type for all assemblies incorporating it.
2. Arrange wire so that its tension tends to tighten the bolt heads, or nuts, to which it is fitted.

SCREW THREADS

1. Both UNF and Metric threads to ISO standards are used. See below for thread identification.
2. Damaged threads must always be discarded. Cleaning up threads with a die or tap impairs the strength and closeness of fit of the threads and is not recommended.
3. Always ensure that replacement bolts are at least equal in strength to those replaced.
4. Do not allow oil, grease or jointing compound to enter blind threaded holes. The hydraulic action on screwing in the bolt or stud could split the housing.
5. Always tighten a nut or bolt to the recommended torque value. Damaged or corroded threads can affect the torque reading.
6. To check or re-tighten a bolt or screw to a specified torque value first loosen a quarter of a turn, then re-tighten to the correct value.
7. Oil thread lightly before tightening to ensure a free running thread, except in the case of threads treated with sealant/lubricant, and self-locking nuts.

UNIFIED THREAD IDENTIFICATION

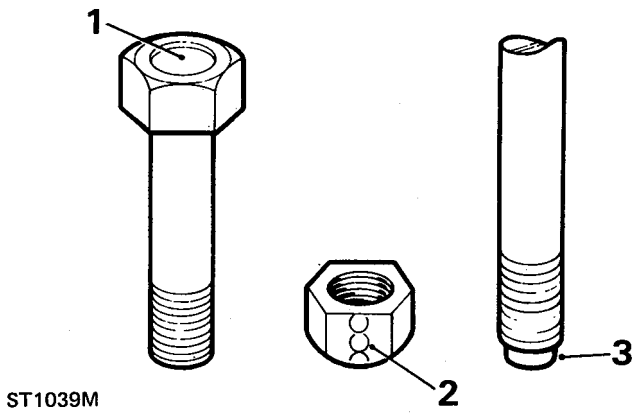

1. **Bolts**
   A circular recess is stamped in the upper surface of the bolt head.
2. **Nuts**
   A continuous line of circles is indented on one of the flats of the hexagon, parallel to the axis of the nut.
3. **Studs, Brake Rods, etc.**
   The component is reduced to the core diameter for a short length at its extremity.

09 - LUBRICANTS, FLUIDS AND CAPACITIES

CONTENTS

Page

INFORMATION

RECOMMENDED LUBRICANTS AND FLUIDS 1
LUBRICATION PRACTICE 2
CAPACITIES 3
ANTI-FREEZE 3
RECOMMENDED FUEL 3

RECOMMENDED LUBRICANTS AND FLUIDS

All climates and conditions

			AMBIENT TEMPERATURE °C								
COMPONENT	**SPECIFICATION**	**VISCOSITY**	**-30**	**-20**	**-10**	**0**	**10**	**20**	**30**	**40**	**50**
Td5 Engine sump	ACEA A1 and B1	5W/30, 5W/40 5W/50	━	━	━	━	━	━	━	━	━
Manual gearbox	Texaco MTF94		━	━	━	━	━	━	━	━	━
Final drive units	Molytex EP90	EP90			━	━	━	━	━	━	━
Swivel pin housings	Texaco EP00	EP00	━	━	━	━	━	━			
Power steering	ATF Dexron IID, or III Texaco cold climate PAS fluid 14315		━	━	━	━	━	━	━	━	━
Transfer box LT230TE	Texaco Multigear	75W-90R	━	━	━	━	━	━	━	━	━

Propeller shaft Front and Rear Lubrication nipples (hubs, ball joints etc.) Seat slides Door lock striker	NLGI - 2 Multi-purpose Lithium based GREASE
Brake and clutch reservoirs	Brake fluids having a minimum boiling point of 260° C (500° F) and complying with FMVSS 116 DOT4
Engine coolant	Use Texaco XLC long life coolant. Use one part anti-freeze to one part water for protection down to -36° C (-33° F). **IMPORTANT: Coolant solution must not fall below 50% anti-freeze otherwise damage to engine is liable to occur. Maximun concentration is 60%.**
Battery lugs, Earthing surfaces where paint has been removed	Petroleum jelly. **NOTE: Do not use Silicone Grease**
Air Conditioning System Refrigerant	Use only refrigerant R134a
Compressor Oil	ND-OIL 8

LUBRICATION PRACTICE

Use a high quality oil of the correct viscosity range and service classification in the engine during maintenance and when topping up. The use of oil not to the correct specification can lead to high oil and fuel consumption and ultimately to damaged components.

Oil to the correct specification contains additives which disperse the corrosive acids formed by combustion and prevent the formation of sludge which can block the oilways. Additional oil additives should not be used. Always adhere to the recommended servicing intervals.

WARNING: Many liquids and other substances used in motor vehicles are poisonous. They must not be consumed and must be kept away from open wounds. These substances, among others, include anti-freeze, windscreen washer additives, lubricants and various adhesives.

CAPACITIES

The following capacity figures are approximate and are provided as a guide only.

Capacities (approx.)*	Litres	Pints
Engine sump oil - Td5	7.20	12.67
Extra when refilling after fitting new filter	1.00	1.76
Manual gearbox	2.38	4.19
Transfer gearbox oil	2.30	4.00
Front differential	1.70	3.00
Rear differential		
90 Models	1.70	3.00
110 Models	2.26	4.00
Power steering box and reservoir LHD	2.90	5.00
Power steering box and reservoir RHD	3.40	6.00
Swivel pin housing oil/grease (each)	0.35	0.60
Fuel tank usable fuel		
90 Models	60.00	13.20 gall
110 & 130 Models	75.00	16.50 gall
Cooling system - Td5	13.00	22.88
Washer bottle	3,0	5.28

NOTE: * All levels must be checked by dipstick or level plugs as applicable.

ANTI-FREEZE

PERCENTAGE CONCENTRATION - 50%

PROTECTION - LOWER TEMPERATURE LIMIT

Complete protection
Vehicle may be driven away immediately from cold, -33° C (-36° F).

Safe limit protection
Coolant in semi-frozen state. Engine may be started and driven away after warm-up period, -41° C (-42° F).

Lower protection
Prevents frost damage to cylinder head, block and radiator. Thaw out before starting engine, -47° C (-53° F).

CAUTION: Anti-freeze content must never be allowed to fall below 50% otherwise damage to the engine is liable to occur. Also, anti-freeze content should not exceed 60% as this will greatly reduce the cooling effect of the coolant.

RECOMMENDED FUEL

Diesel fuel oil, distillate, diesel fuel, automotive gas or Derv to British standard 2869, Class A1 or A2

Using diesel fuel with a class rating lower than stated above could seriously impair vehicle performance.

10 - MAINTENANCE

CONTENTS

Page

MAINTENANCE

UNDERBONNET VIEW - Td5 1
SEATS AND SEAT BELTS 2
LAMPS, HORNS AND WARNING INDICATORS 2
WIPERS AND WASHERS 3
HANDBRAKE 3
BATTERY CONDITION - Td5 4
HANDSET BATTERY 5
HEADLAMP ALIGNMENT 5
ROAD WHEELS 6
TYRE PRESSURES, CONDITION AND TREAD DEPTH 6
BRAKE PADS, CALIPERS AND DISCS 7
ROAD WHEEL SPEED SENSOR HARNESS - Td5 7
FUEL FILTER ELEMENT 8
FUEL FILTER SEDIMENTER - Td5 8
INTERCOOLER / COOLING SYSTEM 9
AMBIENT AIR PRESSURE (AAP) SENSOR - Td5 9
DOOR LOCKS AND HINGES 10
ENGINE COOLANT 10
BRAKE FLUID 11
AIR FILTER ELEMENT AND DUMP VALVE 11
AUXILIARY DRIVE BELT 12
PAS FLUID, CLUTCH FLUID AND SCREEN WASHER LEVELS 12
STEERING BOX 13
ENGINE OIL 14
CENTRIFUGE ROTOR - Td5 14
FULL FLOW OIL FILTER 15
GEARBOX OIL 15
TRANSFER BOX OIL 16
FRONT AND REAR AXLE OIL 17
PROPELLER SHAFTS 18
CLUTCH PIPES AND UNIONS 18
PAS PIPES AND UNIONS 19
ENGINE, GEARBOX, TRANSFER BOX AND AXLES 19
EXHAUST SYSTEM 20
STEERING BOX AND SUSPENSION 20
STEERING BALL JOINTS 21
SHOCK ABSORBERS 22
TOWING BRACKET 22
ENGINE AND TRANSMISSION MOUNTINGS 23

10 - MAINTENANCE

CONTENTS

Page

ROAD TEST 23
ENDORSE SERVICE RECORD 24
REPORT ANY UNUSUAL FEATURES 24

UNDERBONNET VIEW - Td5

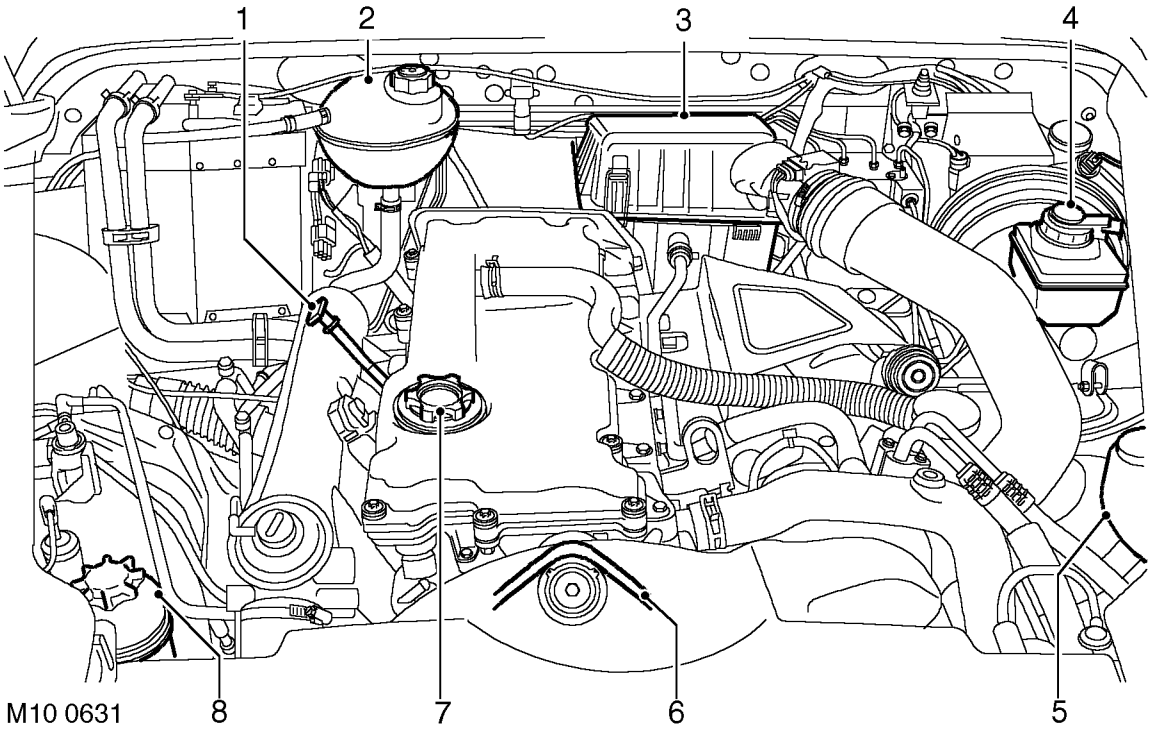

LHD shown

1. Engine oil dipstick
2. Coolant expansion tank
3. Air cleaner
4. Brake/clutch fluid reservoir filler cap
5. Windscreen washer reservior
6. Auxiliary drive belt
7. Engine oil filler cap
8. PAS fluid reservoir

SEATS AND SEAT BELTS

1. Check seat frames are secured to floor and show no signs of movement.
2. Check operation of seat slide and tilt mechanisms, ensuring there is no excessive play between seat cushion and seat back.
3. Check tightness of accessible seat fixings.
4. Fully extract seat belt and allow it to return under its own recoil mechanism.
5. Check entire length of seat belt webbing for signs of fraying or damage. Repeat for all belts.

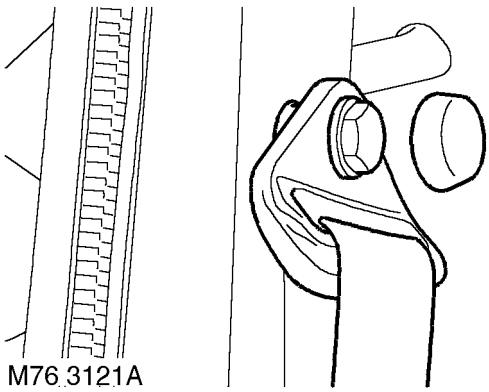

6. Check security of seat belt upper mountings.

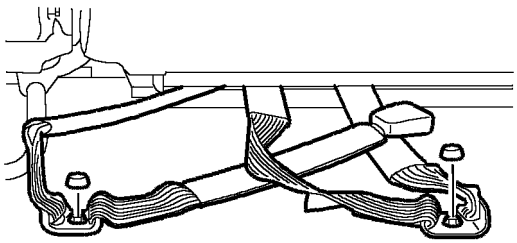

M76 3127A

7. Check security of seat belt buckle mountings.
8. Connect each belt to the correct buckle, check seat belt buckle and tongue are secure. Release seat belt buckle and check for correct operation.
9. Check tightness of accessible seat belt mountings

LAMPS, HORNS AND WARNING INDICATORS

1. Switch on side, head and tail lights and check operation.
2. Check headlamp dim/dip operation.
3. Check headlamp levelling operation.
4. Check turn signals and hazard warning lights operation.
5. Press brake pedal and check operation of brake lights.
6. Check all exterior lamp lenses for clarity and condition. Pay particular attention to head lamp lenses for signs of stone chips or damage.
7. Check horn for loud clear sound.
8. Check operation of all instrument pack warning and indicator lights.
9. Check for correct operation of interior courtesy lights.

WIPERS AND WASHERS

1. Operate screen washer and switch on wipers. Check washer jets are correctly aimed and check for smooth smearless operation across screen of wiper blades at all speeds, including intermittent.
2. Repeat operation for rear screen wipers/washers.
3. Check all wiper blades for condition and signs of splits or damage.

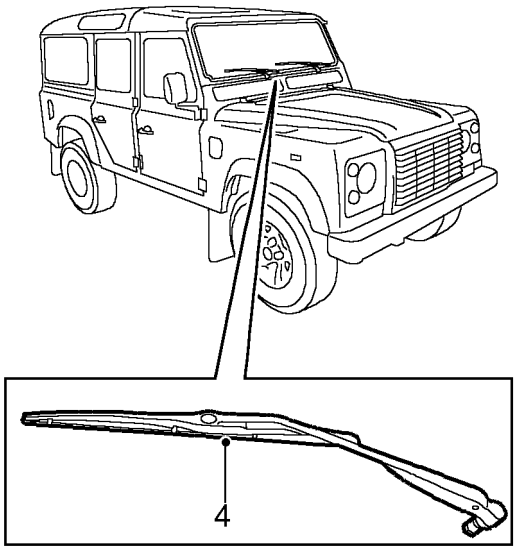

M10 0634

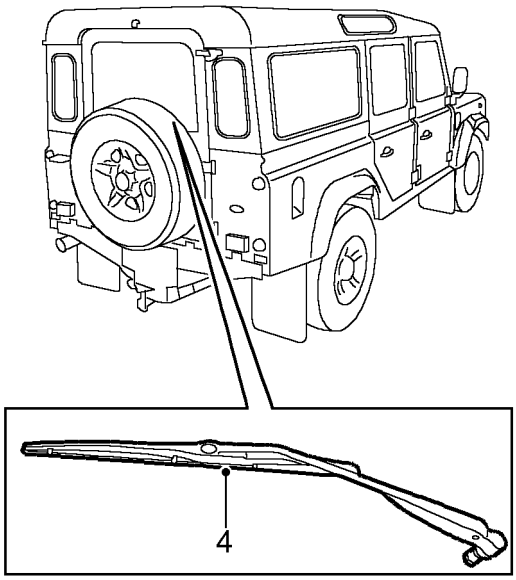

M10 0633

4. Check security of wiper arms.

HANDBRAKE

1. With the vehicle stationary, apply handbrake and check for correct operation. ***See BRAKES, Adjustment.***
2. Release handbrake and check for correct operation.

NOTE: Any adjustment required as a result of the checking process will be subject to additional labour and/or material cost and should not be carried out without the authorisation of the customer.

Adjust handbrake (First 12,000 miles/12 months only

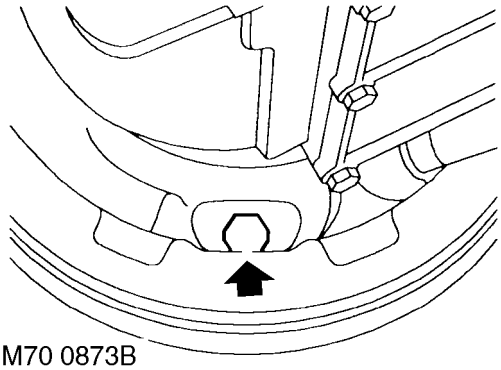

M70 0873B

1. Adjust handbrake cable. ***See BRAKES, Adjustment.***

NOTE: Additional time is built into the first 12,000/12 months service time to allow for handbrake cable adjustment.

BATTERY CONDITION - Td5

Remove

1. Remove drivers seat base.
2. Release clip securing battery cover.
3. Remove battery cover.

NOTE: The vehicle may be fitted with an alarm and immobilisation system. To prevent the alarm from sounding, it is important that the following procedure is used when disconnecting the battery.

4. Turn the ignition switch to position 'II', and then to position '0'.
5. Remove the ignition key.
6. Disconnect the vehicle -ve terminal within 15 seconds.

NOTE: Always disconnect the -ve terminal first. When replacing, connect the +ve terminal first.

Check

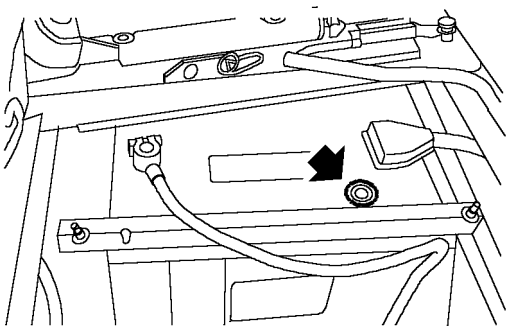

M10 0636

The battery fitted to Td5 models is designed to be maintenance free, so topping-up is not possible. On the top of the battery is a battery indicator. When the indicator shows:

- GREEN - The battery is in a good state of charge.
- DARK (turning to black) - The battery needs charging.
- CLEAR (or light yellow) - The battery needs replacing. Do not charge the battery or jump start the vehicle in this condition.
- If the green dot is missing, the battery needs charging.

NOTE: If the indicator shows clear or yellow, tap the indicator with the handle of a screwdriver to disperse any air bubbles. If the indicator colour remains unchanged, the battery will need replacing.

Refit

7. Clean and grease battery terminals and leads with petroleum jelly.
8. Connect leads to battery (+ve first) and tighten clamp bolts.
9. Fit battery cover and secure with clip.
10. Fit drivers seat base.

HANDSET BATTERY

Remove

NOTE: Do not remove a battery until you are ready to install the replacement. Always fit a Land Rover STC4080 or a Panasonic CR2032 replacement battery.

1. Unlock the vehicle and disarm the alarm system.
2. Turn the ignition switch to position 'II', then turn to position '0' and remove the key.
3. Carefully prise the handset apart, starting from the keyring end. Avoid damaging the seal between the two halves of the case.

CAUTION: Do not allow moisture to get inside the handset.

4. Slide the battery out of its clip, taking care to avoid touching the circuit board or the contact surfaces of the clip.
5. Press and hold one of the buttons for at least 5 seconds to drain any residual power from the handset.

Refit

6. Fit the new battery, ensuring that correct polarity is maintained (+ve side facing up). Finger marks will adversely affect battery life. Avoid touching the flat surfaces of the battery, and wipe clean before fitment.
7. Reassemble the two halves of the handset. Operate the Padlock symbol button at least 4 times within range of the vehicle to resynchronise the hanset.

HEADLAMP ALIGNMENT

1. Check alignment of headlamps. ***See ELECTRICAL, Adjustment.***

ROAD WHEELS

Remove

1. Loosen wheel nuts. Raise vehicle for wheel free condition and remove the wheel nuts.
2. Mark the wheel to stud relationship to ensure that the wheels are refitted in the same orientation.

Refit

3. Apply a thin coat of anti-seize compound to wheel hub centre.
4. Refit wheels to original hub position.

NOTE: When refitting road wheel nuts do not overtighten using powered tools. Ensure the wheel nuts are correctly torqued in the correct sequence.

5. Tighten wheel nuts.
   Steel wheels - ***100 Nm (80 lbf/ft)***
   Alloy wheels - ***130 Nm (96 lbf/ft)***
   Heavy Duty wheels - ***170 Nm (125 lbf/ft)***

TYRE PRESSURES, CONDITION AND TREAD DEPTH

1. Check for any apparent damage to tyres, paying particular attention to side walls.
2. Look at tyre treads and check for any unusual wear patterns which may indicate out of specification adjustment of steering or suspension.

NOTE: Any adjustments to steering or suspension will be subject to additional labour and/or material cost and should not be carried out without the authorisation of the customer.

3. Measure the tread depth across the width of the tyre and around the circumference. Annotate the maintenance check sheet with the lowest figure obtained from each tyre.

NOTE: Any requirement to replace tyres should be advised to the customer before any remedial work is carried out. This will be subject to additional labour and/or material cost and should not be carried out without the authorisation of the customer.

BRAKE PADS, CALIPERS AND DISCS

1. With front road wheels removed, check brake pad thickness and ensure that both pads are wearing evenly.
2. Check brake discs for signs of cracking, excessive scoring or oil contamination.

NOTE: Any requirement to replace brake pads or brake disc should be advised to the customer as this will incur additional labour and/or material cost and should not be carried out without the authorisation of the customer.

3. Check for any signs of brake fluid leakage from caliper seals, hoses or unions.
4. Using brake cleaner, remove excessive deposits of brake dust from pads, calipers and disc shields.

ROAD WHEEL SPEED SENSOR HARNESS - Td5

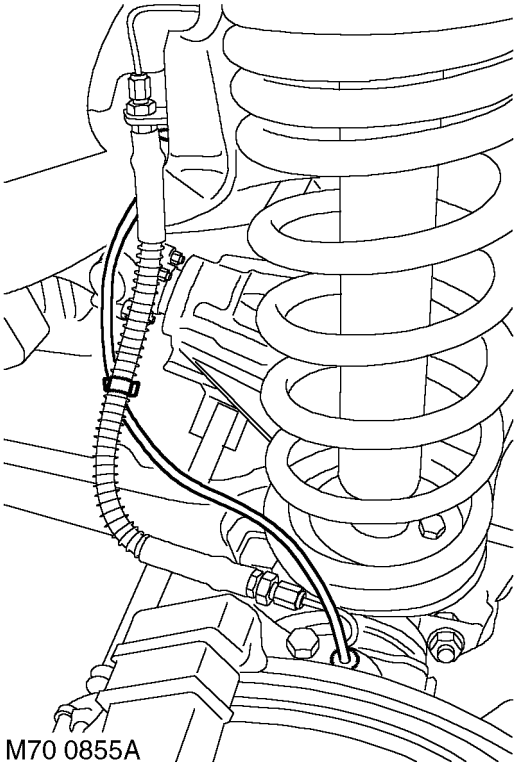
M70 0855A

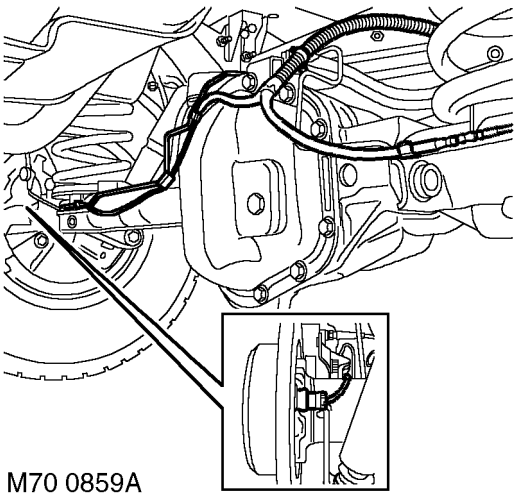
M70 0859A

1. Check each sensor harness is correctly and securely routed.
2. Inspect each harness for chafing or damage.

NOTE: Any requirement to replace a road wheel speed sensor should be advised to the customer as this will incur additional labour and/or material cost and should not be carried out without the authorisation of the customer.

FUEL FILTER ELEMENT

1. Renew fuel filter element. ***See FUEL SYSTEM, Repair.***

FUEL FILTER SEDIMENTER - Td5

WARNING: Fuel vapour is highly flammable and in contained speces is also explosive and toxic. Always have a fire extinguisher containing FOAM, CO2, GAS OR POWDER close at hand when handling or draining fuel.

1. Disconnect battery negative lead.
2. Position suitable container beneath fuel filter
3. Disconnect multiplug from sedimenter
4. Rotate sedimenter anti-clockwise until water flows from drain tube.
5. Allow to drain until diesel fuel flows from drain tube.
6. Rotate sedimenter fully clockwise.
7. Connect multiplug.
8. Reconnect battery negative lead.

INTERCOOLER / COOLING SYSTEM

1. Visually check for any obstructions in the radiator and intercooler matrix and remove debris as necessary.
2. Visually check fan blades for damage.
3. Check cooling, intercooler and heating systems for leaks, hoses and oil pipes for security and condition.
4. Check accessible hose clips for tightness.
5. Check coolant level, top-up if necessary

Cooling System Top-Up

1. With engine cold, remove expansion tank filler cap.
2. Top-up with recommended mixture of coolant until level reaches mark on expansion tank.
3. Fit expansion tank filler cap.

Intercooler Flush

1. Remove intercooler. ***See FUEL SYSTEM, Repair.***
2. Flush intercooler element using Unicorn Chemicals 'C' Solve following the manufaturers instructions.
3. Thoroughly dry intercooler ensuring that no trace of solvent remains in the element.
4. Refit intercooler. ***See FUEL SYSTEM, Repair.***

AMBIENT AIR PRESSURE (AAP) SENSOR - Td5

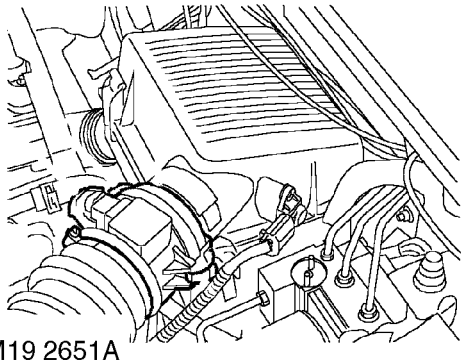

M19 2651A

1. Check ambient air pressure sensor for damage.

DOOR LOCKS AND HINGES

Front, rear and tail doors

1. Open each door in turn and lubricate door hinges and check strap using recommended lubricant.
2. Lubricate door lock, striker and private lock using PTFE lubricant. Remove excessive lubricant, particularly from door striker area, to avoid customer complaint.
3. Check tightness of accessible door lock and striker fixings
4. Open and close door to check for smooth, noise-free operation. Ensure door closes securely.
5. Check for smooth operation of private lock.

Bonnet

1. With bonnet open, lubricate hinges, striker, lock and safety catch using a suitable lubricant.

ENGINE COOLANT

1. Renew engine coolant. ***See COOLING SYSTEM, Adjustment.***

BRAKE FLUID

1. Renew brake fluid. ***See BRAKES, Adjustment.***

AIR FILTER ELEMENT AND DUMP VALVE

1. Replace air cleaner element. ***See FUEL SYSTEM, Repair.***

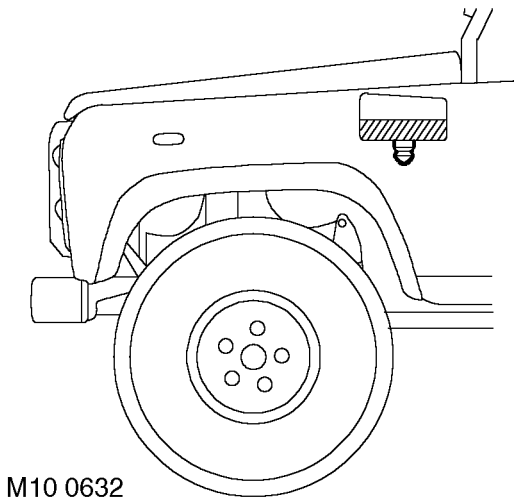

2. Remove all dirt from dump valve.

AUXILIARY DRIVE BELT

Check

1. Check auxiliary drive belt for signs of splits, fraying, oil contamination and wear.

NOTE: Any requirement to replace the auxiliary drive belt should be advised to the customer as this will incur additional labour and/or material cost and should not be carried out without the authorisation of the customer.

Renew

1. Renew auxiliary drive belt. ***See ELECTRICAL, Repair.***

NOTE: Additional time is built into the 96,000/8 year service time to allow for auxiliary drive belt renewal.

PAS FLUID, CLUTCH FLUID AND SCREEN WASHER LEVELS

PAS Fluid

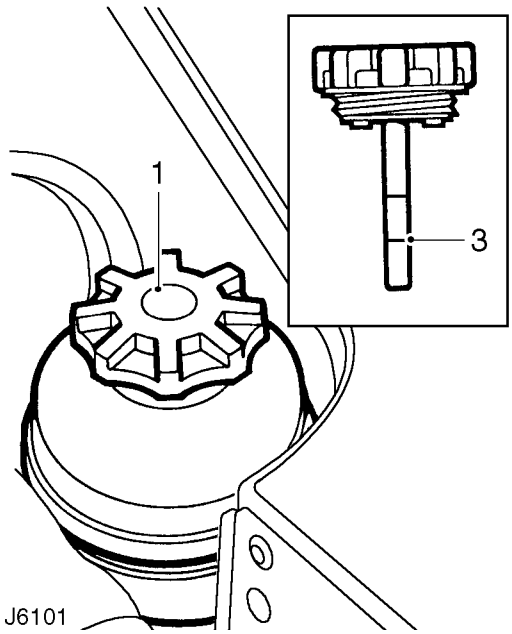

1. Clean arear around PAS reservoir filler cap, and remove cap.
2. Check fluid level in PAS reservoir.
3. Top-up if necessary to the correct level using recommended fluid. ***See LUBRICANTS, FLUIDS AND CAPACITIES, Information.***
4. Fit filler cap.

Clutch Fluid

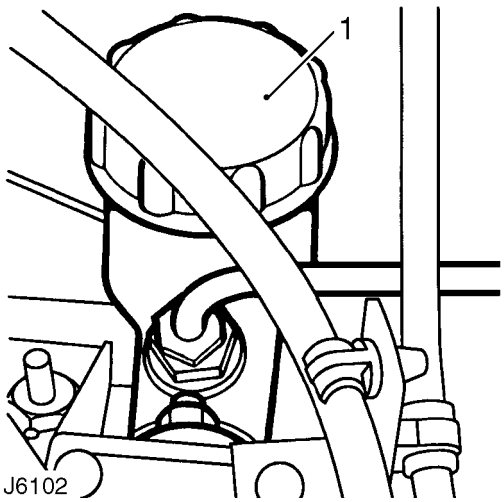

1. Clean area around clutch fluid reservoir cap, and remove cap.
2. Check fluid level in clutch fluid reservoir.
3. Top-up if necessary to the correct level using recommended fluid. ***See LUBRICANTS, FLUIDS AND CAPACITIES, Information.***
4. Fit filler cap.

Screen Washer Fluid

1. Clean area around washer fluid filler cap.
2. Check washer fluid level in reservoir.
3. Top-up if necessary to the correct level using recommended fluid. ***See LUBRICANTS, FLUIDS AND CAPACITIES, Information.***
4. Fit filler cap.

STEERING BOX

Check

1. Check steering box for fluid leaks.

Adjust

1. Check there is no backlash in steering box with the road wheels in the straight ahead position. Adjust if necessary. ***See STEERING, Adjustment.***

ENGINE OIL

WARNING: Avoid excessive skin contact with used engine oil. Used engine oil contains potentially harmful contaminants which may cause skin cancer or other serious skin disorders.

1. Remove underbelly panel. ***See CHASSIS AND BODY, Repair.***
2. Position suitable container beneath sump.
3. Clean arear around drain plug.

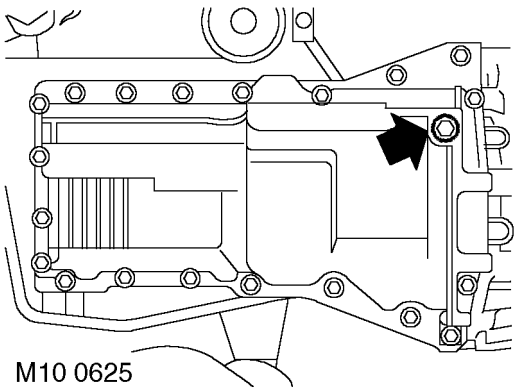

4. Remove oil drain plug, discard sealing washer.
5. Allow oil to drain.
6. Fit new sealing washer to oil drain plug.
7. Fit engine drain plug and tighten to ***23 Nm (17 lbf.ft).***
8. Fill engine with recommended grade of oil to correct mark on dipstick. ***See LUBRICANTS, FLUIDS AND CAPACITIES, Information.***
9. Fit underbelly panel. ***See CHASSIS AND BODY, Repair.***

CENTRIFUGE ROTOR - Td5

1. Renew centrifuge rotor. ***See ENGINE , Repair.***

FULL FLOW OIL FILTER

1. Renew full flow oil filter. ***See ENGINE , Repair.***

GEARBOX OIL

WARNING: Avoid excessive skin contact with used gearbox oil. Used gearbox oil contains potentially harmful contaminants which may cause skin cancer or other serious skin disorders.

1. Renew gearbox oil. ***See MANUAL GEARBOX, Adjustment.***

TRANSFER BOX OIL

WARNING: Avoid excessive skin contact with mineral oil. Mineral oils remove the natural fats from the skin, leading to dryness, irritation and dermatitis.

Check

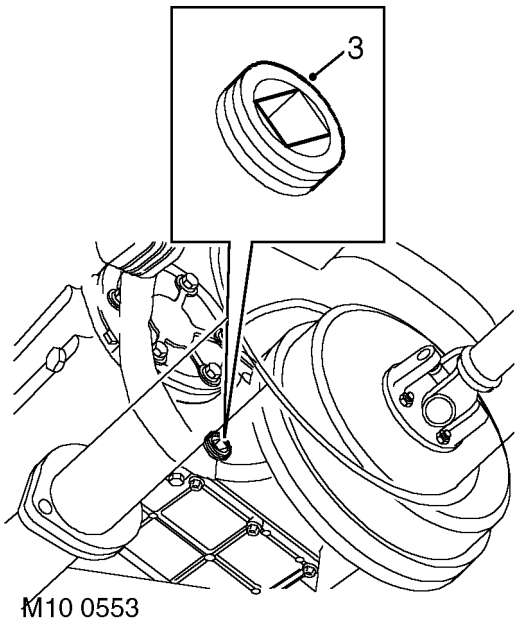

1. Remove underbelly panel. ***See CHASSIS AND BODY, Repair.***
2. Clean area around oil filler/level plug.
3. Remove oil filler/level plug.
4. Check that oil level is to bottom of oil filler/level plug hole.
5. Remove all traces of sealant from threads of oil filler/level plug.
6. Apply Loctite 290 to threads of oil filler/level plug and tighten to ***25 Nm (18 lbf.ft).***
7. Remove all traces of oil from main casing.
8. Fit underbelly panel. ***See CHASSIS AND BODY, Repair.***

Renew

1. Remove underbelly panel. ***See CHASSIS AND BODY, Repair.***
2. Place a suitable container beneath transfer box to catch any fluid spillage.
3. Clean area around oil filler/level and drain plugs.
4. Remove oil filler/level plug.
5. Remove oil drain plug.
6. Allow oil to drain.
7. Apply Loctite 290 to threads of oil drain plug.
8. Fit transfer box drain plug and tighten to ***30 Nm (22 lbf.ft).***
9. Fill transfer box with recommended oil to bottom of oil filler/level plug hole. ***See LUBRICANTS, FLUIDS AND CAPACITIES, Information.***
10. Remove all traces of sealant from threads of oil filler/level plug.
11. Apply Loctite 290 to threads of oil filler/level plug and tighten to ***25 Nm (18 lbf.ft).***
12. Remove all traces of oil from main casing.
13. Fit underbelly panel. ***See CHASSIS AND BODY, Repair.***

FRONT AND REAR AXLE OIL

Renew

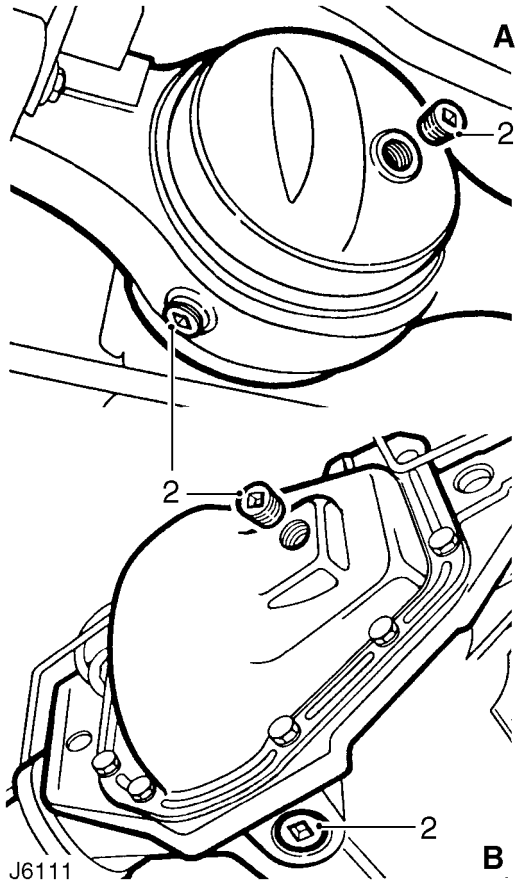

A - Front and rear axle, 90 models, front, 110/130 models.
B - Rear axle, 110/130 models.

WARNING: Avoid excessive skin contact with used axle oil. Used axle oil contains potentially harmful contaminants which may cause skin cancer or other serious skin disorders.

1. Ensure vehicle is level and place suitable tray under axle to be drained.
2. Using 13mm square drive wrench, remove drain and filler/level plugs from axle and allow oil to drain completely.
3. Clean and refit drain plug.
4. Inject new oil, until it runs out from filler/level hole. Allow excess oil to drain and wipe clean. ***See LUBRICANTS, FLUIDS AND CAPACITIES, Information.***
5. Clean and refit filler/level plug.

Check

1. Ensure vehicle is level.
2. Using 13 mm square drive wrench, remove filler/level plug.
3. If necessary inject new oiluntil oil runs out from filler/level hole. Allow excess oil to drain and wipe clean. ***See LUBRICANTS, FLUIDS AND CAPACITIES, Information.***
4. Clean and refit filler/level plug.

PROPELLER SHAFTS

1. Clean area around front universal joint grease nipple.

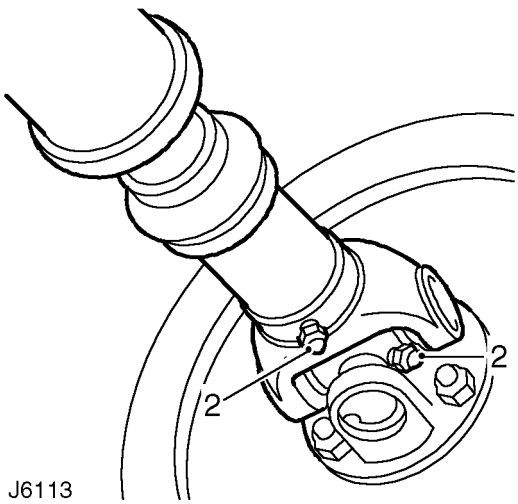

2. Apply recommended grease to the grease nipple. ***See LUBRICANTS, FLUIDS AND CAPACITIES, Information.***

CLUTCH PIPES AND UNIONS

Check

1. Check route of clutch pipe from master cylinder to slave cylinder. Ensure that pipe is correctly retained and shows no signs of fluid leakage or chafing.
2. Check unions for signs of fluid leakage.

PAS PIPES AND UNIONS

Check

1. Check PAS pipes for correct, secure routing and signs of chafing.
2. Check for signs of fluid leakage from PAS pump, hoses, and hose unions.

ENGINE, GEARBOX, TRANSFER BOX AND AXLES

Check

1. Check for oil leaks from engine, gearbox, tansfer box, and front and rear axles. Pay particular attention to areas around oil seals.

EXHAUST SYSTEM

1. Visually check condition of exhaust system for signs of damage.
2. Check condition of exhaust heat shields.
3. Check exhaust system is firmly secured and check condition of exhaust mounting rubbers, clamps and brackets.

STEERING BOX AND SUSPENSION

1. Check steering box fixings. Tighten if necessary to ***81 Nm (60 lbf.ft).***
2. Check LH and RH front radius arm fixings. Tighten if necessary. ***See FRONT SUSPENSION, Repair.***
3. Check Panhard rod fixings. Tighten if necessary. ***See FRONT SUSPENSION, Repair.***
4. Check all rear axle fixings. Tighten if necessary.

STEERING BALL JOINTS

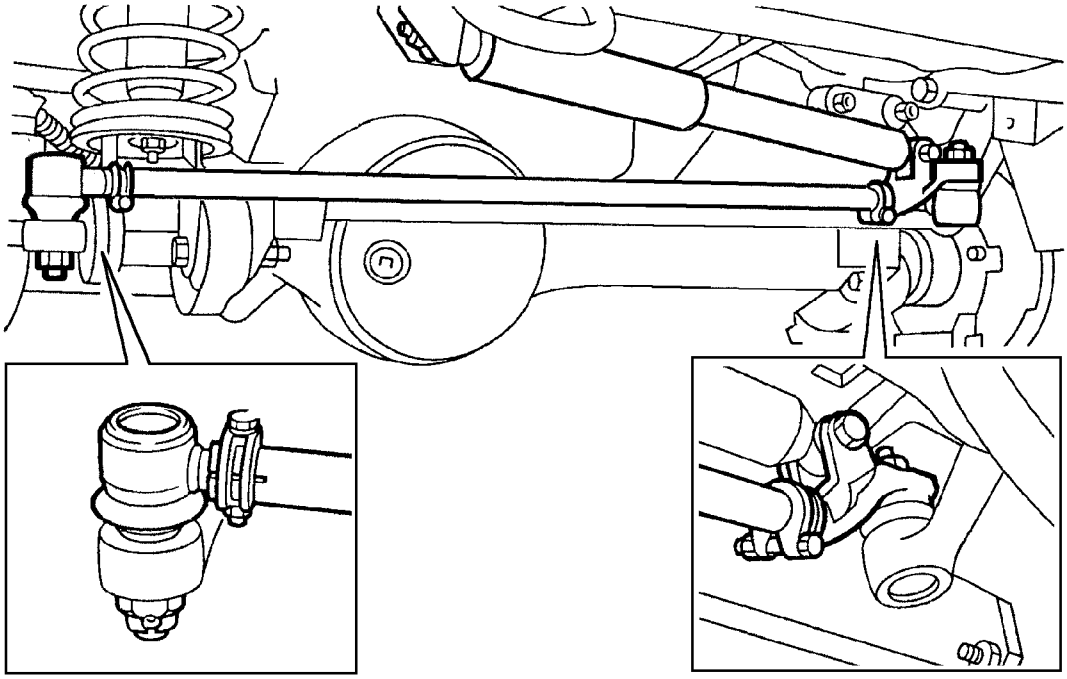

M570830

1. Check for wear in joints by moving ball joint up and down vigorously. If free movement is apparent, fit a new joint assembly.
2. Check condition of steering ball joints paying particular attention to dust covers.

NOTE: Any requirement to replace the steering ball joints should be advised to the customer as this will incur additional labour and/or material cost and should not be carried out without the authorisation of the customer.

NOTE: Ball joints are lubricated for life during manufacture and require no further lubrication unless the rubber boot has been dislodged or damaged. All joints should be checked at specified service intervals, but more frequently if vehicle is used under arduous conditions.

SHOCK ABSORBERS

1. Check for signs of leakage from suspension dampers.
2. Check for signs of suspension damper damage.

TOWING BRACKET

1. Check security of towing bracket.

ENGINE AND TRANSMISSION MOUNTINGS

1. Check condition of front LH engine mounting. Tighten fixings if necessary. ***See ENGINE , Repair.***
2. Check condition of front RH engine mounting. Tighten fixings if necessary. ***See ENGINE , Repair.***
3. Check condition of rear LH gearbox mounting. Tighten fixings if necessary. ***See ENGINE , Repair.***
4. Check condition of rear RH gearbox mounting. Tighten fixings if necessary. ***See ENGINE , Repair.***

ROAD TEST

There are two purposes for conducting a road test. Firstly, to ensure the work completed within the dealership meets the standards required as layed down by dealership processes. Secondly, for a skilled technician to assess the general condition of the vehicle and report any conditions that the customer should be made aware of.

CAUTION: Two wheel roller tests must not be carried out. Four wheel roller tests must be restricted to 3 mph (5 kph).

1. Check for correct operation of starter switch. Ensure the engine starts in a correct manner. Leave the engine running.
2. With vehicle stationary, turn steering from lock to lock. Check for smooth operation and ensure there is no undue noise from the power steering pump or drive belt.
3. Depress clutch and select all gears in turn. Check for smooth notch free engagement.
4. Drive vehicle on a short road test. Check all vehicle systems for correct operation. Pay particular attention to:
   Engine noise
   Gearbox noise
   Suspension noise
   Body noise
   Braking system operation
   Gear selection
   Engine performance
5. Check for correct operation of all instruments and warning devices where practical.
6. After road test, carry out a final inspection of the vehicle on vehicle ramps.
7. Check all underbonnet fluid levels and top-up if necessary.

ENDORSE SERVICE RECORD

1. Insert date and mileage of next service.
2. Insert current mileage.
3. Tick one of the boxes on the brake fluid replacement indicator.
4. Endorse service record with dealer stamp.
5. Sign and date the service record.
6. Sign and date the maintenance check sheet.

REPORT ANY UNUSUAL FEATURES

1. Produce a written report detailing additional work necessary, or items which may require attention prior to the next service.

12 - ENGINE

CONTENTS

Page

DESCRIPTION AND OPERATION

TD5 ENGINE 1
GENERAL 12
CYLINDER BLOCK 13
CRANKSHAFT, SUMP AND OIL PUMP 22
CYLINDER HEAD COMPONENTS 25
CAMSHAFT COVER COMPONENTS 30
CAMSHAFT TIMING CHAIN COMPONENTS 30
CYLINDER BLOCK FLOW 32
OIL COOLER / FILTER FLOW 34
CYLINDER HEAD FLOW 36

ADJUSTMENT

ENGINE OIL PRESSURE CHECK 1

REPAIR

CAMSHAFT 1
PULLEY - CRANKSHAFT 3
OIL SEAL - CRANKSHAFT - REAR 4
BEARING - SPIGOT - CRANKSHAFT 5
GASKET - CYLINDER HEAD 6
ROCKER SHAFT ASSEMBLY 11
GASKET - COVER - CAMSHAFT 13
ENGINE AND ANCILLARIES 14
MOUNTING - FRONT - LH 19
MOUNTING - FRONT - RH 20
MOUNTING - GEARBOX - REAR - LH 21
MOUNTING - GEARBOX - REAR - RH 22
FLYWHEEL 22
FILTER - OIL 23
STRAINER - OIL PICK-UP 24
PUMP - OIL 24
GASKET - ENGINE TO SUMP 26
SWITCH - OIL PRESSURE 28
VALVE - RELIEF - OIL PRESSURE 29
COOLER - ENGINE OIL 29
CENTRIFUGE ASSEMBLY 30
ROTOR - CENTRIFUGE 32

CONTENTS

Page

OIL SEAL - TIMING COVER 32
TIMING CHAIN AND SPROCKETS 33

OVERHAUL

GASKET - INLET MANIFOLD 1
GASKET - EXHAUST MANIFOLD 2
GASKET - CYLINDER HEAD 3
CYLINDER HEAD GASKET SELECTION 7
CYLINDER HEAD - OVERHAUL 8
GASKET - ENGINE SUMP 20
SEAL - CRANKSHAFT - REAR 21
STARTER RING GEAR 22
PUMP - OIL 23
TIMING CHAIN AND SPROCKETS 26
BEARINGS - CONNECTING RODS 30
PISTONS, CONNECTING RODS AND CYLINDER BORES 32
CRANKSHAFT 36

TD5 ENGINE

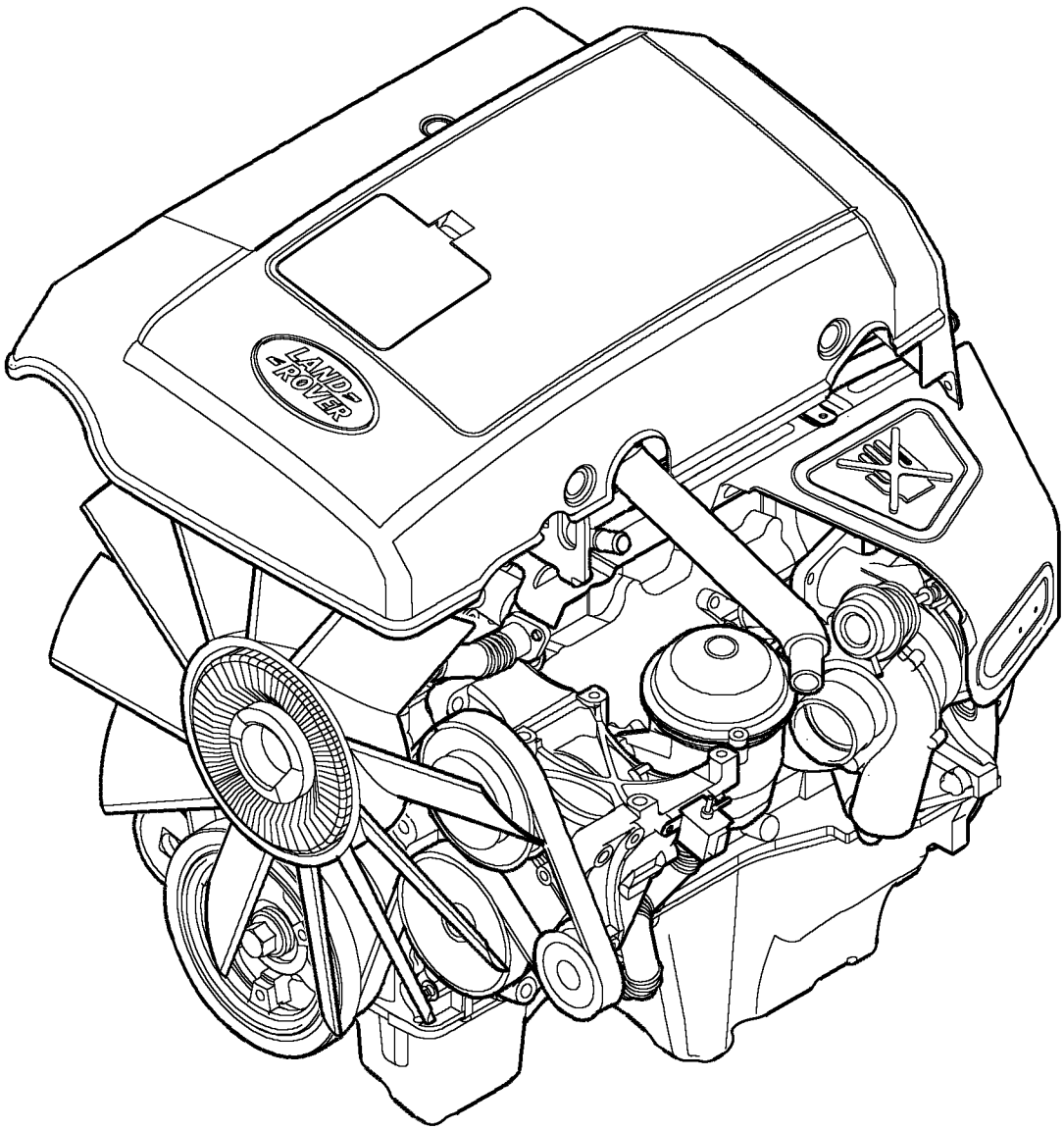

M12 4652

Cylinder block components

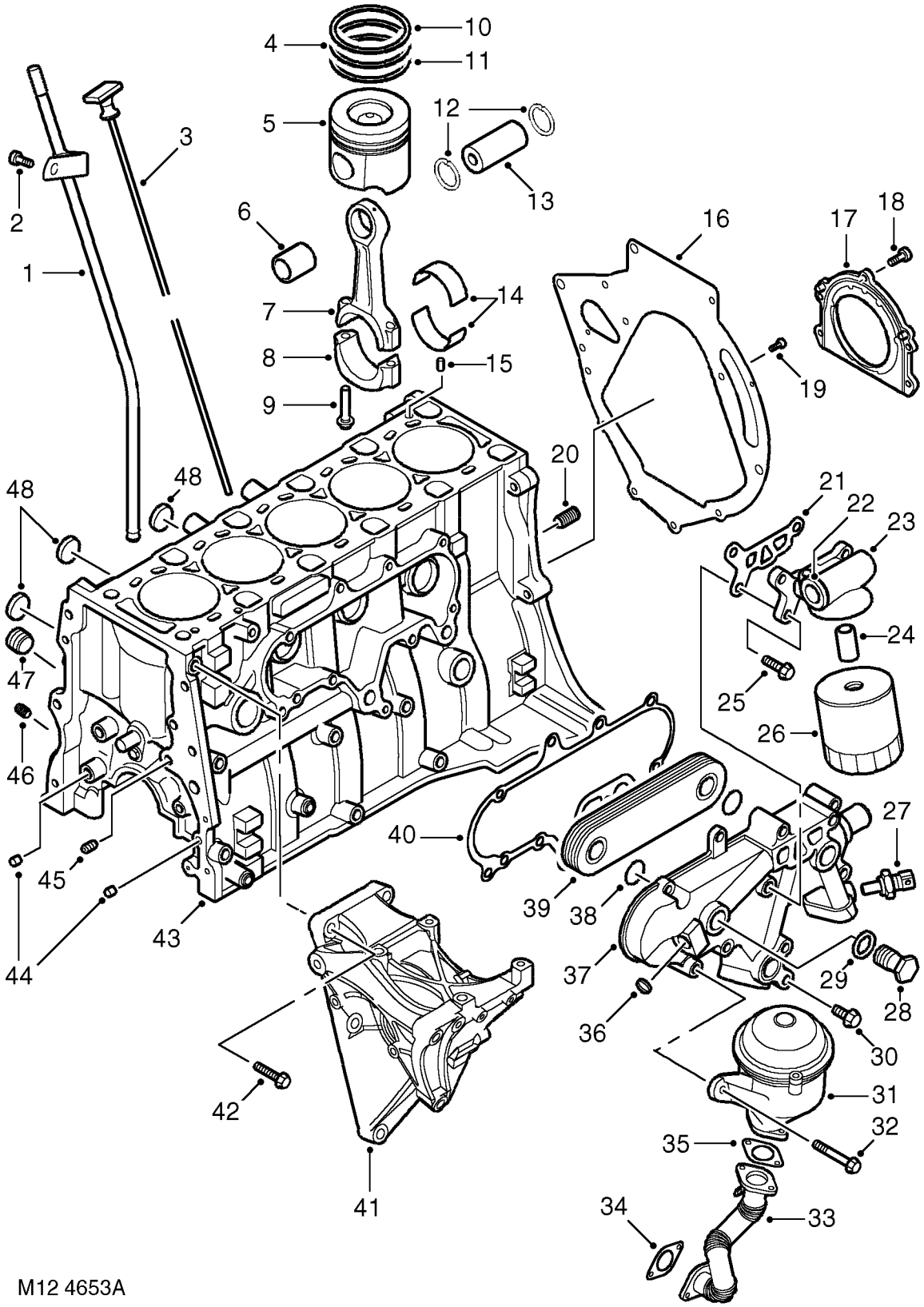

1. Oil dipstick tube
2. Screw - oil dipstick tube to camshaft carrier
3. Oil dipstick
4. 2nd piston ring
5. Piston
6. Small-end bush
7. Connecting rod
8. Big-end bearing cap
9. Connecting rod bolt (2 off per connecting rod)
10. Top piston ring
11. Oil control ring
12. Circlips (2 off per gudgeon pin)
13. Gudgeon pin
14. Big-end bearing shells
15. Dowels to cylinder head (2 off)
16. Gearbox shim plate
17. Rear crankshaft seal and housing
18. Screws - crankshaft seal flange to engine block (5 off)
19. Bolts - Gearbox shim plate to cylinder block (2 off)
20. Main oil gallery plug (rear)
21. Oil filter adaptor gasket
22. Oil filter adaptor thermostat
23. Oil filter adaptor assembly
24. Oil filter adaptor insert
25. Oil filter adaptor to cylinder block bolts (3 off)
26. Oil filter
27. Oil pressure switch
28. Oil cooler banjo bolts (2 off)
29. O-rings - oil cooler banjo bolts (2 off)
30. Oil cooler to cylinder block bolts (7 off)
31. Centrifuge assembly
32. Centrifuge to cylinder block bolts (3 off)
33. Centrifuge oil drain pipe
34. Oil drain pipe to sump gasket
35. Centrifuge to oil drain pipe gasket
36. Oil cooler plugs (3 off)
37. Oil cooler assembly
38. Oil cooler matrix ’O’ rings (2 off)
39. Oil cooler matrix
40. Oil cooler gasket
41. Coolant and PAS pump assembly bracket
42. Bracket bolts (5 off + 1 stud/nut)
43. Cylinder block
44. Dowels - timing chain cover (2 off)
45. Oil gallery delivery plug
46. Cross drilling plug
47. Coolant jacket plug
48. Core plugs (3 off)

Crankshaft, sump and oil pump

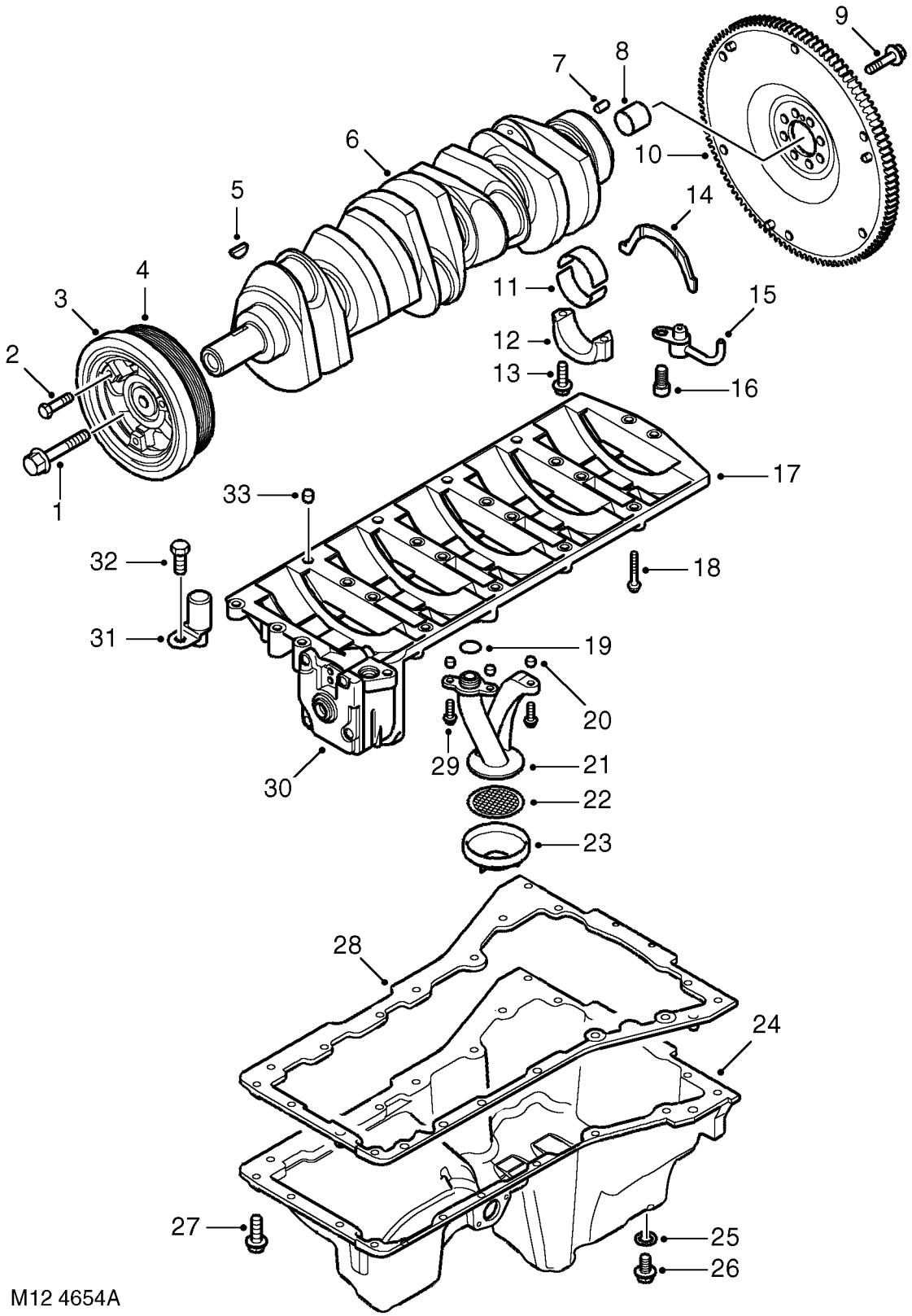

1. Crankshaft pulley bolt
2. TV Damper to crankshaft pulley bolts (3 off)
3. TV Damper
4. Crankshaft pulley
5. Woodruff key
6. Crankshaft
7. Crankshaft to flywheel dowel
8. Spigot bush
9. Flywheel to crankshaft bolts (8 off)
10. Flywheel assembly
11. Main bearing shells (6 pairs)
12. Main bearing caps (6 off)
13. Main bearing cap bolts (12 off)
14. Thrust washer (2 off at No. 3 Main bearing)
15. Piston lubrication jets (5 off)
16. Piston lubrication jet cap head screw (5 off)
17. Stiffener plate (oil pump integral)
18. Stiffener plate / oil pump assembly to cylinder block bolts (22 off)
19. Oil pick-up pipe O-ring
20. Oil pick-up pipe inserts (2 x 6mm; 1 x 10mm)
21. Upper oil pick-up pipe
22. Oil pick-up pipe gauze
23. Lower oil pick-up pipe
24. Sump
25. Oil drain plug seal
26. Oil drain plug
27. Sump to cylinder block bolts (20 off)
28. Sump gasket
29. Oil pick-up pipe bolts (3 off)
30. Oil pump
31. Chain lubrication jet
32. Chain lubrication jet screw
33. Stiffener to cylinder block dowel (2 off)

Cylinder head components

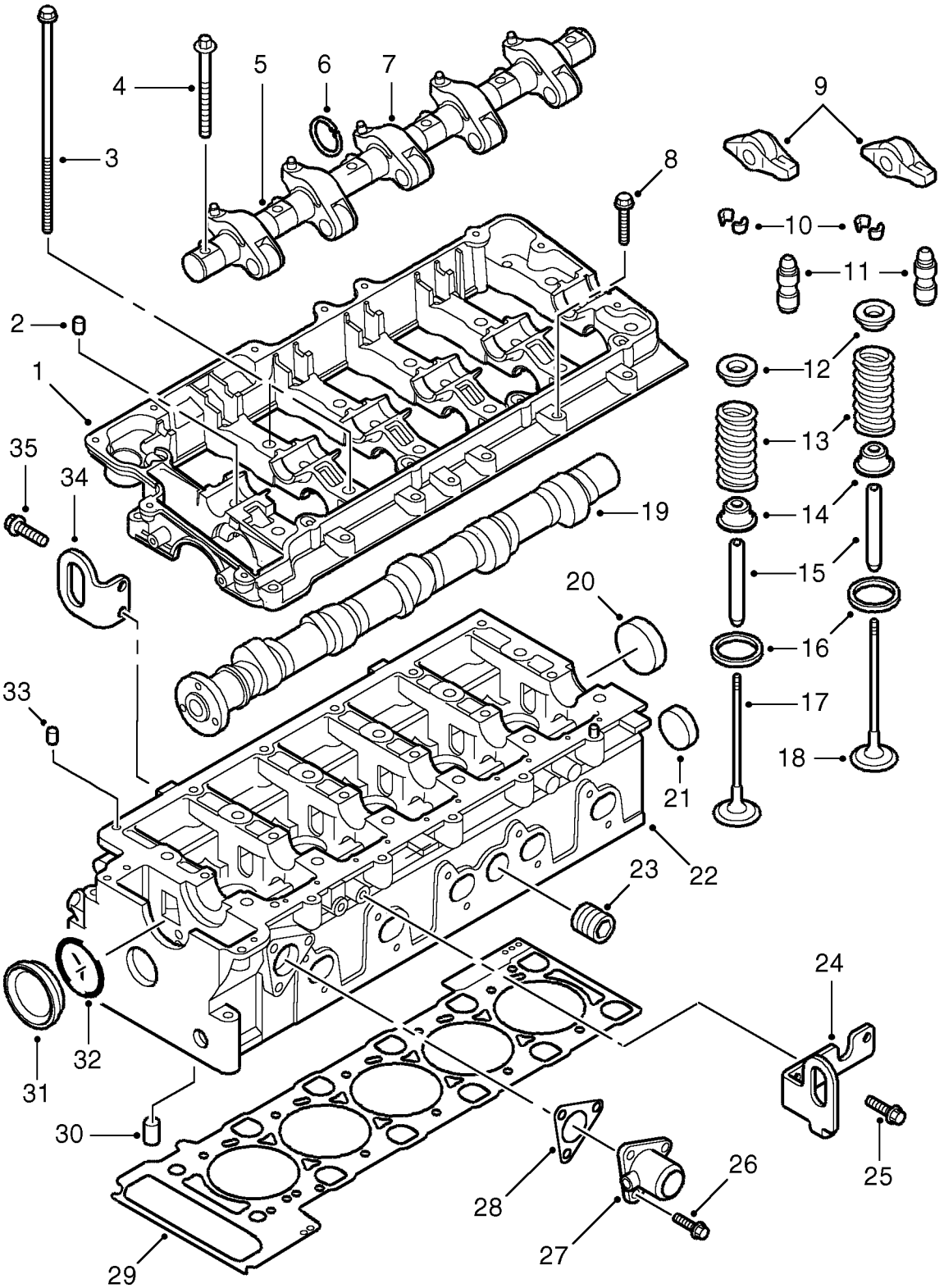

M12 4655A

1. Camshaft carrier
2. Dowel - rocker shaft to camshaft carrier (1 off)
3. Cylinder head bolts (12 off)
4. Rocker shaft to camshaft carrier bolts (6 off)
5. Rocker shaft
6. Circlips (10 off)
7. EUI Rocker arms (5 off)
8. Camshaft carrier to cylinder head screws (13 off)
9. Finger follower (10 off)
10. Valve spring collets (20 off)
11. Lash adjuster (10 off)
12. Valve spring retainer (10 off)
13. Valve spring (10 off)
14. Valve stem seal (10 off)
15. Valve guide (10 off)
16. Valve seat insert (10 off)
17. Inlet valve (5 off)
18. Exhaust valve (5 off)
19. Camshaft
20. Camshaft bore seal (rear)
21. Coolant jacket core plug
22. Cylinder head block
23. Water jacket threaded plug
24. Engine lifting bracket (LH)
25. Engine lifting bracket bolts (2 off)
26. Coolant outlet elbow to cylinder head bolts (3 off)
27. Coolant outlet elbow
28. Coolant outlet elbow gasket
29. Cylinder head gasket
30. Non-return valve (not removable, integral in cylinder head)
31. Camshaft bore end cap (front)
32. End cap seal
33. Cylinder head to cam carrier dowel (2 off)
34. Engine lifting bracket (RH)
35. Engine lifting bracket bolts (2 off)

Camshaft cover and engine cover

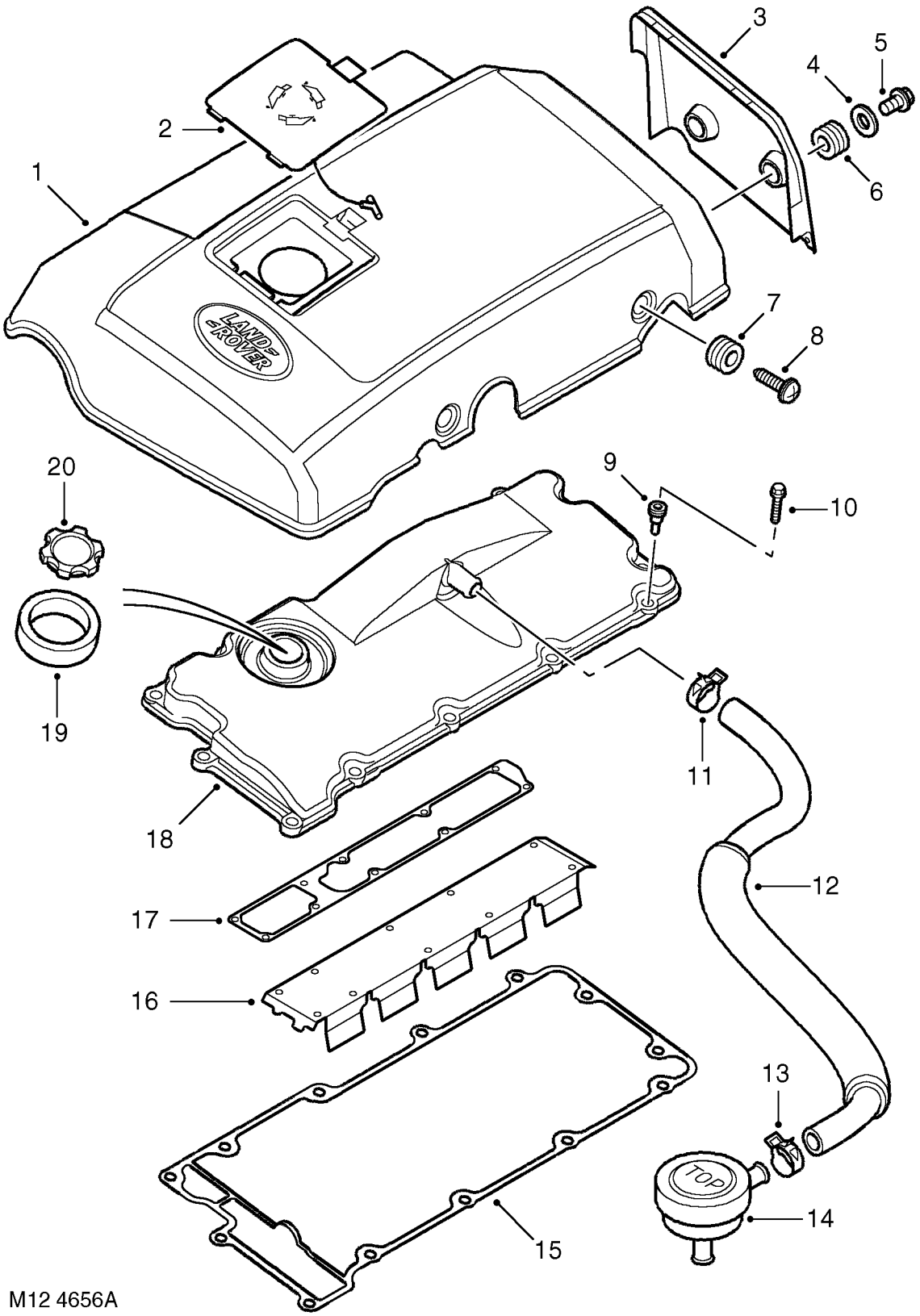

1. Acoustic cover
2. Oil filler flap
3. Rear acoustic cover
4. Rear acoustic cover inserts (2 off)
5. Rear acoustic cover grommets (2 off)
6. Rear acoustic cover screws (2 off)
7. Acoustic cover grommets (3 off)
8. Acoustic cover bolts (3 off)
9. Camshaft cover isolators (13 off)
10. Camshaft cover flange screws (13 off)
11. Breather hose clip
12. Breather hose
13. Breather hose to breather valve clip
14. Breather valve
15. Camshaft cover gasket
16. Oil separator plate
17. Oil separator plate gasket
18. Camshaft cover
19. Acoustic cover to camshaft cover seal
20. Oil filler cap and seal

Camshaft timing chain components

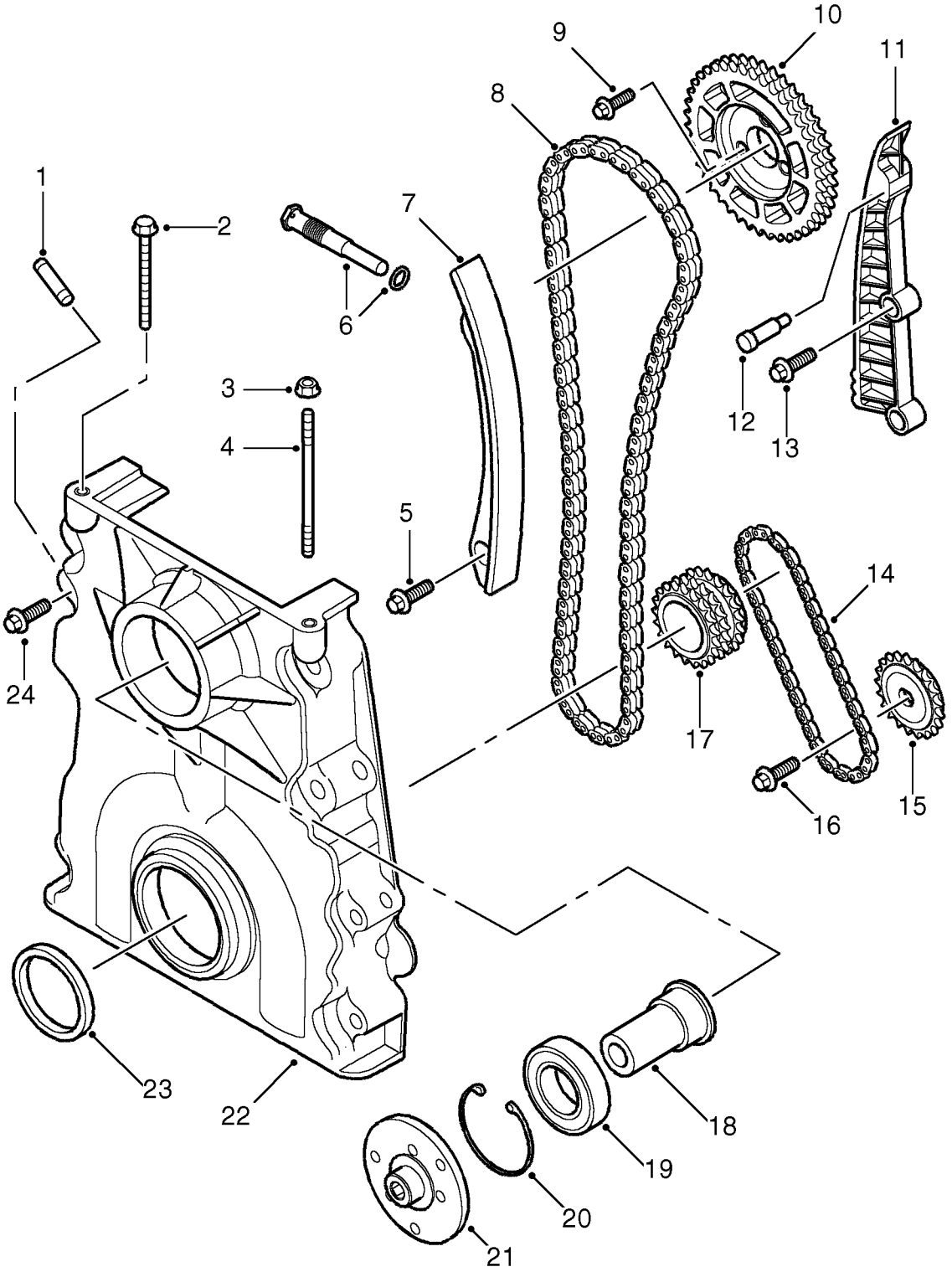

M12 4657A

1. Vacuum pump stub pipe
2. Cylinder head to timing chain cover bolt
3. Cylinder head to timing chain cover nut
4. Cylinder head to timing chain cover stud
5. Tensioner assembly pivot screw
6. Tensioner adjuster
7. Tensioner arm assembly
8. Duplex timing chain - crankshaft to camshaft sprocket
9. Camshaft sprocket bolts (3 off)
10. Camshaft sprocket
11. Fixed chain guide
12. Fixed guide pin
13. Fixed chain guide to cylinder block screws
14. Oil pump drive chain
15. Oil pump sprocket
16. Oil pump sprocket screw
17. Crankshaft sprockets
18. Bearing to viscous fan shaft
19. Viscous fan to cover bearing
20. Circlip
21. Hub - viscous fan to bearing flange
22. Timing chain cover
23. Timing chain cover to crankshaft seal
24. Timing chain to cylinder head screws (8 off)

GENERAL

The Td5 diesel engine is a 2.5 litre, 5 cylinder, in-line direct injection unit having 2 valves per cylinder, operated by a single overhead camshaft. The engine emissions on pre EU3 models comply with ECD2 (European Commission Directive) legislative requirements. EU3 models comply with ECD3 legislative requirements. Both units employ electronic engine management control, positive crankcase ventilation and exhaust gas recirculation to limit the emission of pollutants. The unit is water cooled and turbo-charged and is controlled by an electronic engine management system.

The cylinder block is a monobloc cast iron construction with an aluminium stiffening plate fitted to the bottom of the cylinder block to improve lower structure rigidity. The cylinder head and sump are cast aluminium. An acoustic cover is fitted over the upper engine to reduce engine generated noise.

The engine utilises the following features:

- **Electronic Unit Injectors (EUI's)** controlled by an Engine Management System for precise fuel delivery under all prevailing operating conditions.
- **Turbocharging** which delivers compressed air to the combustion chambers via an intercooler for improved power output.
- **Fuel Cooler**
- **Oil Cooler**
- **Centrifuge Oil Filter**
- **Hydraulic Lash Adjusters** with independent finger followers

CYLINDER BLOCK

The cylinders and crankcase are contained in a single cast iron construction. The cylinders are direct bored and plateau honed with lubrication oil supplied via lubrication jets for piston and gudgeon pin lubrication and cooling. It is not possible to rebore the cylinder block if the cylinders become worn or damaged. Three metal core plugs are fitted to the three centre cylinders on the right hand side of the cylinder block.

Lubrication oil is distributed throughout the block via the main oil gallery to critical moving parts through channels bored in the block which divert oil to the main and big-end bearings via oil holes machined into the crankshaft. Oil is also supplied from the cylinder block main gallery to the five lubrication jets which cool and lubricate the piston and gudgeon pins. Plugs are used to seal both ends of the main oil gallery at front and rear of the engine block. An oil cooler is fitted to the LH side of the engine block; ports in the oil cooler assembly mate with ports in the cylinder block to facilitate coolant flow. Oil is diverted through the oil cooler, centrifuge filter and full-flow filter before supplying the main oil gallery. A tapping in the oil filter housing provides a lubrication source for the turbocharger bearings and an oil pressure switch is included in a tapping in the oil cooler housing which determines whether sufficient oil pressure is available to provide engine lubrication and cooling.

Cylinder cooling is achieved by water circulating through chambers in the engine block casting. A threaded coolant jacket plug is located at the front RH side of the cylinder block.

Cast brackets are bolted to both sides of the engine block for mounting the engine to the chassis on the LH and RH hydramount studs.

The gearbox bolts directly to the engine block; a gearbox shim plate is located between the adjoining faces of the gearbox and the flywheel side of the engine block and is fixed to the rear of the engine block by two bolts. Two hollow metal dowels locate the rear of the cylinder block to the shim plate. The gearbox casing provides the mounting for the starter motor.

A port is included at the rear left hand side of the cylinder block which connects to the turbocharger oil drain pipe to return lubrication oil to the sump. A plug sealing the lubrication cross-drilling gallery is located at the front right hand side of the cylinder block and plugs for the main lubrication gallery are located at the front and rear of the cylinder block. Two plastic dowels are used to locate the cylinder head to the cylinder block and must be replaced every time the cylinder head is removed from the cylinder block.

Connecting rods

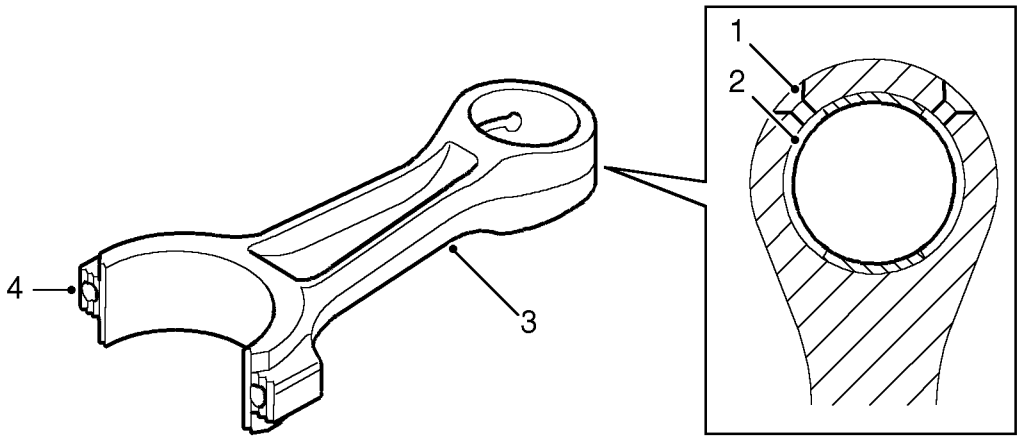

M12 4712

1. Small-end oil holes
2. Small-end bushing
3. Connecting rod
4. Serrated fracture

The connecting rods are machined, H-section steel forgings which feature a fracture-split at the big-end between the connecting rod and the bearing cap. The connecting rod features a serrated fracture across the big-end at right angles to the length of the connecting rod, this forms a unique mating surface between the connecting rod and the fractured end which is used as the big-end cap. The use of a fracture split in the big-end of the connecting rod ensures a perfect match for assembly on the crankshaft bearing journals and provides the connecting rod with strong resistance to lateral movement.

The end-cap fixing bolts are offset to ensure that the cap is fitted to the connecting rod in the correct orientation. If the end-cap is fitted incorrectly and the end-cap bolts tightened, the connecting rod must be replaced, since the matching serrations will have been damaged.

The big-end bearing shells are plain split halves without location tags. On EU2 vehicles the two halves of the bearing shells are of different construction. The upper half bearing shell fitted to the connecting rod is treated using the sputtering process to improve its resistance to wear. The connecting rod bearing shell can be identified by having a slighter darker colouration than the big-end bearing cap shell, and the back face of the connecting rod bearing shell has a shinier finish than the front face.

On EU3 vehicles both bearing shells are of the same construction as the connecting rod bearing shell.

The small-end of the connecting rod has a bushed solid eye which is free to move on the gudgeon pin, the bushing is a hand push, interference fit. The steel bushing has two slots machined in its upper surface for providing oil lubrication to the moving surface of the gudgeon pin. The oil slots must be correctly aligned to the oil slots provided in the small end of the connecting rod. The small-end lubrication is supplied by squirt feed from the piston lubrication jets.

Pistons

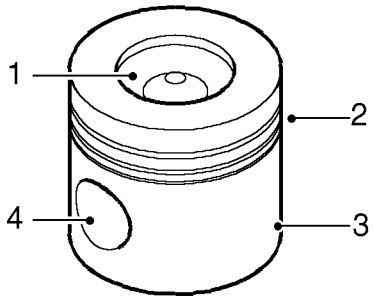

M12 4714

1. Bowl in piston head
2. Piston ring grooves
3. Graphite coated aluminium alloy skirt
4. Gudgeon pin bore

The five pistons have graphite compound coated aluminium alloy skirts which are gravity die cast and machined. Each of the pistons has phosphated, shaped gudgeon pin bores and a swirl chamber (bowl-in-piston) machined in the head which partly contains the inlet air that is compressed during the combustion process and helps provide turbulence for efficient air / fuel mixture to promote complete combustion. The recesses in the piston crowns also provide clearance for the valve heads.

CAUTION: Pre EU3 and EU3 pistons are not interchangeable due to the EU3 piston combustion bowl being offset.

The pistons are attached to the small-end of the connecting rods by fully floating gudgeon pins which are retained in the piston gudgeon pin bushings by circlips.

The pistons and gudgeon pins are gallery cooled, oil being supplied under pressure from the piston lubrication jets when the pistons are close to bottom dead centre.

Piston rings

Each piston is fitted with two compression rings and an oil control ring. The top compression ring is located in a steel insert ring carrier which helps to provide a minimal reaction to compression forces.

The top ring is barrel-edged and chrome-plated, the 2nd compression ring is taper-faced and the oil control ring is chrome-plated and features a bevelled ring with spring.

Oil cooler

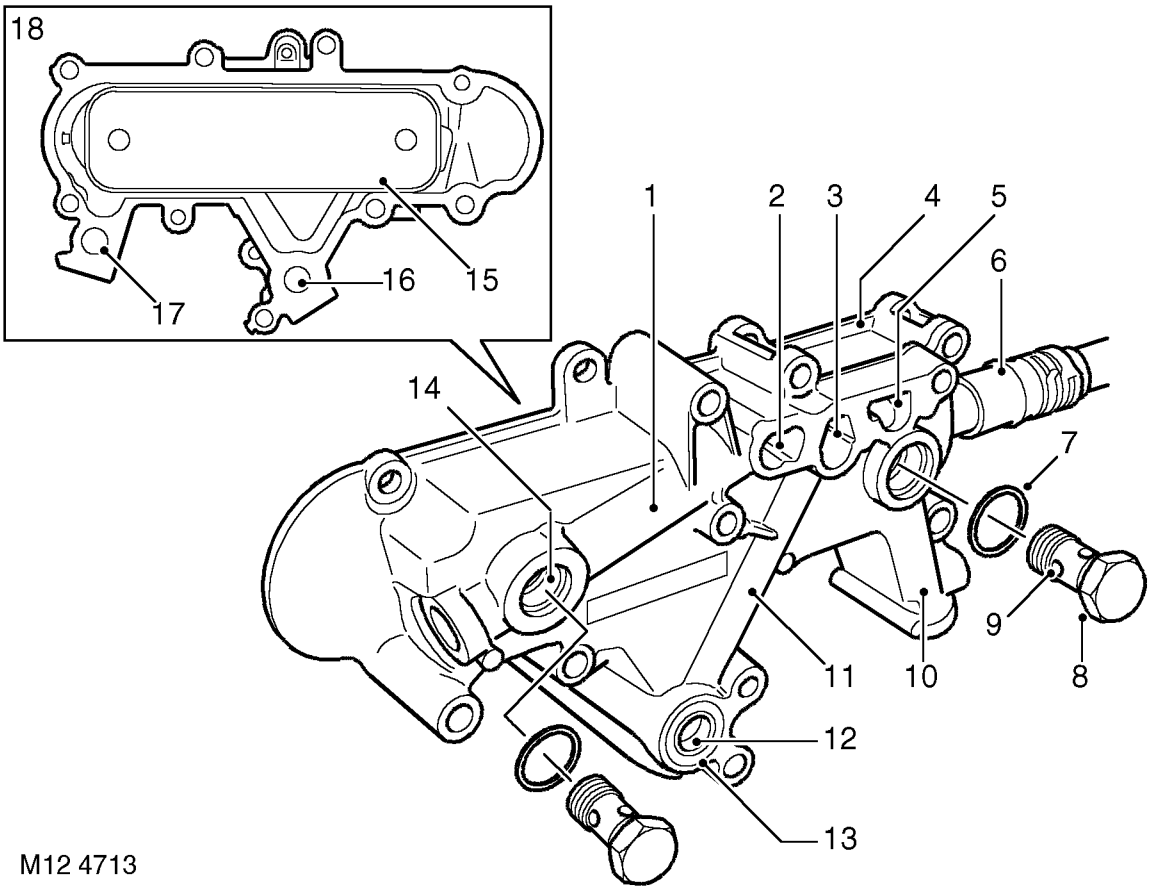

1. Front oil gallery - full-flow filter to oil cooler matrix
2. Full-flow filter adaptor outlet port to oil cooler (opens at 74°C)
3. Full-flow filter inlet port
4. Oil cooler housing
5. Full-flow filter outlet port to cylinder block
6. Coolant inlet port
7. Oil cooler banjo bolt seals (2 off)
8. Banjo bolts (2 off)
9. Banjo bolt oil holes - to oil cooler matrix
10. Rear oil gallery - full-flow filter / oil cooler outlet to cylinder block
11. Centre oil gallery - from pump to full-flow filter
12. Inlet port to centrifuge filter
13. Sealing ring - centrifuge filter housing to oil cooler housing
14. Port - oil cooler matrix
15. Oil cooler matrix
16. Inlet port from pump via cylinder block to oil cooler housing
17. Outlet port from oil cooler housing to cylinder block
18. Rear view of oil cooler housing

The engine oil cooler assembly is located on the left hand side of the engine block behind the oil centrifuge and oil filter. The housing is bolted to the engine block by seven bolts. A matrix is included in the oil cooler housing which acts as a heat exchanger. Coolant flow circulates through the oil cooler housing under pressure from the coolant pump and distributes the flow evenly around the matrix fins and then along the block into three core holes for cylinder cooling. Coolant enters the oil cooler through a pipe with a rubber hose extension at the rear side of the engine. The coolant hose is attached to the stub pipe of the oil cooler by a spring clip.

Oil, drawn from the sump by the oil pump, passes through the oil cooler via the cylinder block. The flow of coolant around the exterior surface of the oil cooler matrix cools a proportion of the engine oil flow as it passes through the oil cooler.

The oil cooler is sealed to the cylinder block by a gasket which must be replaced every time the oil cooler housing is removed.

Oil filters

The Td5 engine features two types of oil filter; the main filter is a standard disposable cartridge-type full flow oil filter which is augmented with a by-pass centrifuge filter used to filter out particulate matter having a smaller diameter smaller than 15 micron but greater than 3 micron.

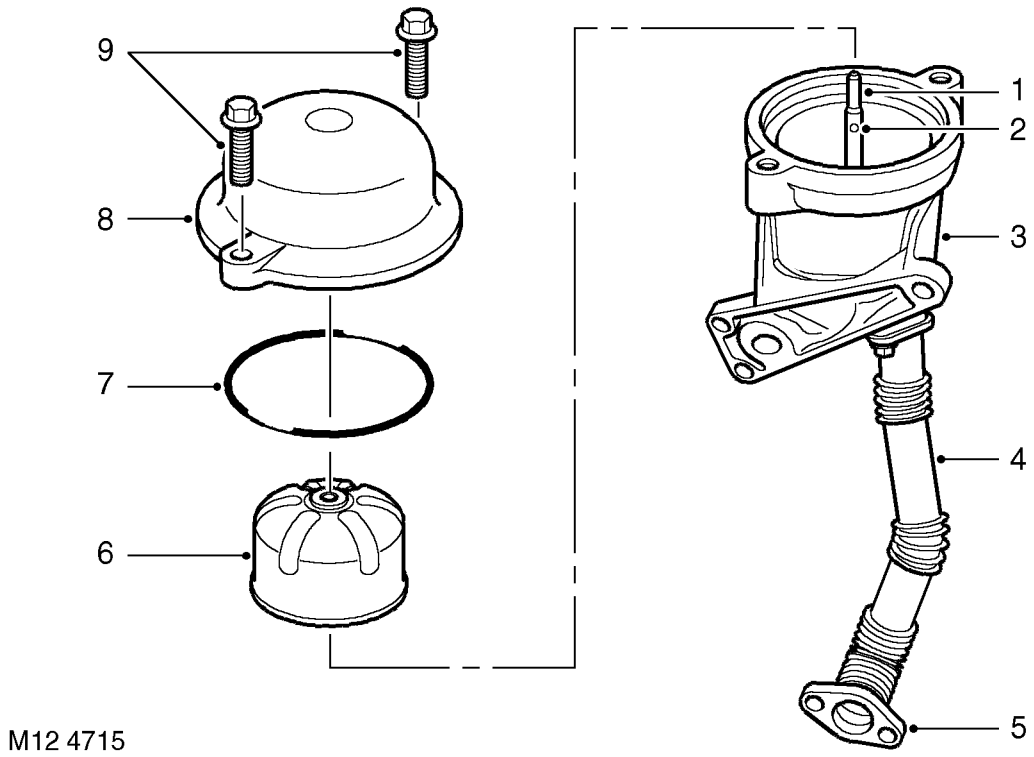

1. Centre spindle
2. Spindle oil holes (2 off)
3. Centrifuge filter housing
4. Centrifuge filter drain pipe
5. Port - centrifuge filter drain pipe to sump
6. Filter rotor
7. Internal seal
8. Cover
9. Cover screws (2 off)

The centrifuge filter is located on the left hand side of the engine block by the exhaust manifold and is housed in a pot which is bolted to the oil cooler housing by means of three bolts. The pot contains a rotor located on a central spindle which spins at up to 15,000 rev/min when oil is flowing through the unit under pressure. The rotor contains two fine holes drilled at obtuse angles which cause the rotor to spin about the centre spindle when high pressure oil is passing through it. The inner surface of the rotor captures carbon deposits and small particulate matter as it is thrown outwards under centrifugal force to form a sludge on the inner walls of the rotor. The unit is able to trap very fine impurities that build up in the oil that would be too small to filter using the normal paper-element type full-flow filters alone.

Full flow filter

Approximately 10% of the total oil flow enters the centrifuge pot through a side port in the pot casting which is mated to an outlet port at the lower side of the oil cooler housing. A rubber 'O' ring sits in a recess around the oil cooler port which seals the faces between the centrifuge pot and oil cooler port, and it must be replaced every time the centrifuge assembly is removed. Oil leaves the centrifuge pot through a drain tube which is attached to the base of the pot by means of two fixing screws. The lower end of the drain tube returns oil to the sump and is fixed to the sump by means of two screws. Gaskets are included at the port interfaces between the oil drain tube and the centrifuge pot and the oil drain tube and sump return port; these gaskets must be replaced every time the oil drain tube is removed.

The centrifuge cover is fixed to the pot by two screws and is sealed by an 'O' ring.

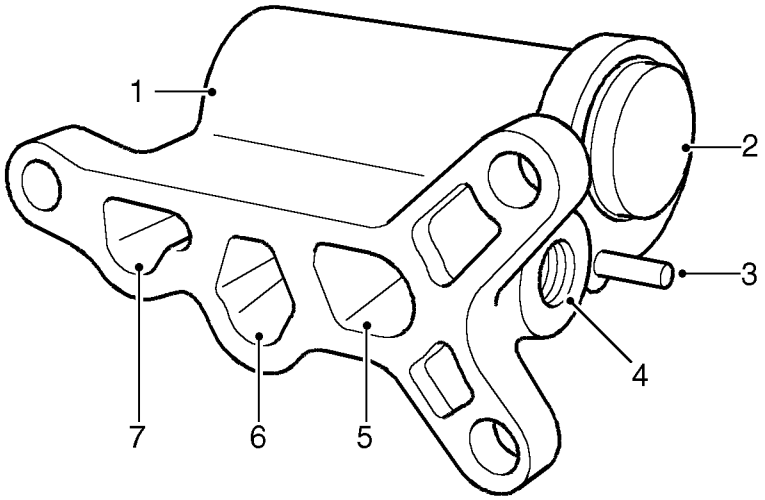

M12 4716

1. Full-flow filter housing
2. Thermostat
3. Roll-pin
4. Port - feed line to turbocharger
5. Outlet port from full-flow filter - higher than 74°C
6. Inlet port to full-flow filter
7. Outlet port from full-flow filter - lower than 74°C

The main filter is a conventional full flow cartridge type filter containing a paper element able to trap particles greater than 15 micron (0.015 mm) in diameter.

The cartridge is screwed to an adaptor casting by way of a hollow brass threaded insert which connects the filter outlet port to the adaptor casting. A sealing ring seals the union between the oil filter cartridge and the adaptor casting.

Oil filter housing thermostat

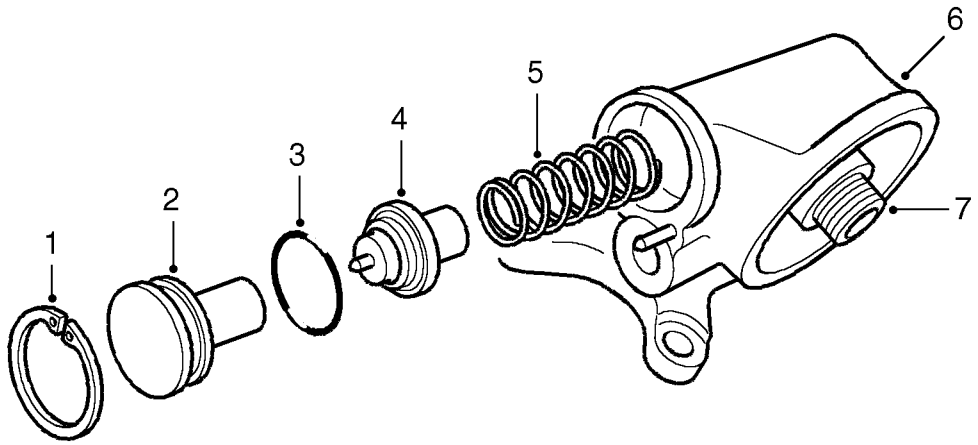

M12 4717

1. Circlip
2. Thermostat end cap
3. Oil seal
4. Thermostatic valve
5. Return spring
6. Oil filter housing
7. Threaded insert

The oil filter housing contains a thermostatically controlled valve to control the direction and proportion of oil flow through the oil cooler matrix. When the oil temperature is cool, the centre spindle of the thermostatic element is compressed. In this condition the valve completely seals the passage to the turbocharger feed tapping and flow is directed through the oil filter adaptor housing, passing from the outlet of the full-flow filter to the cylinder block via the rear oil return gallery in the oil cooler housing. A proportion of the oil flow from the right hand filter outlet port is passed through to the oil cooler matrix to supply the turbocharger oil feed line.

When the oil temperature rises, the heated wax in the thermostat causes the thermostat centre spindle to rise and push against the housing end cap, compressing the valve spring further and so opening the valve. In this condition, oil flow from the outlet side of the full-flow filter is allowed to pass directly to the turbocharger oil feed line and reverses the flow through the oil cooler matrix, which now delivers a proportion of cooled oil flow to the cylinder block via the outlet port at the right hand side of the oil cooler housing.

The filter canister contains a by-pass valve which opens when the engine is cold or if the filter becomes blocked. The by-pass valve opens when a pressure drop of greater than 1.6 kg/cm^2(157 kPa, 23 lbf/in^2) is experienced.

Oil pressure switch

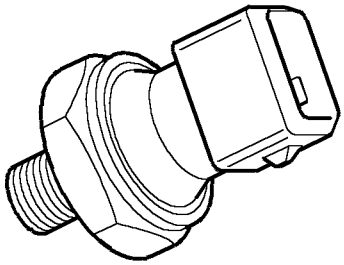

M12 4718

The oil pressure switch is located in a port on the outlet side of the oil cooler housing. It detects when a safe operating pressure has been reached during engine starting and initiates the illumination of a warning light in the instrument pack if the pressure drops below a given value.

CRANKSHAFT, SUMP AND OIL PUMP

The crankshaft, sump and oil pump components are described below:

Sump
The sump is a wet-type, of aluminium construction and is sealed to the engine block by means of a rubber gasket and twenty fixing bolts. The four bolts at the gearbox end of the sump are longer than the other sixteen bolts.

The sump gasket incorporates compression limiters (integrated metal sleeves) at the bolt holes, which are included to prevent distortion of the gasket when the sump to cylinder block bolts are being tightened.

An oil drain plug is fitted at the bottom of the oil sump reservoir. An oil return drain pipe is also attached to the oil sump which returns oil from the centrifugal filter.

Stiffener Plate
The stiffener plate assembly provides lower engine block rigidity and utilises dowels to align it to the bottom of the cylinder block. A rotary oil pump is integral with the stiffener plate and an oil pick-up and strainer assembly is fitted to the underside of the stiffener plate. The stiffener and oil pump assembly is secured to the cylinder block by 22 bolts.

Oil pump

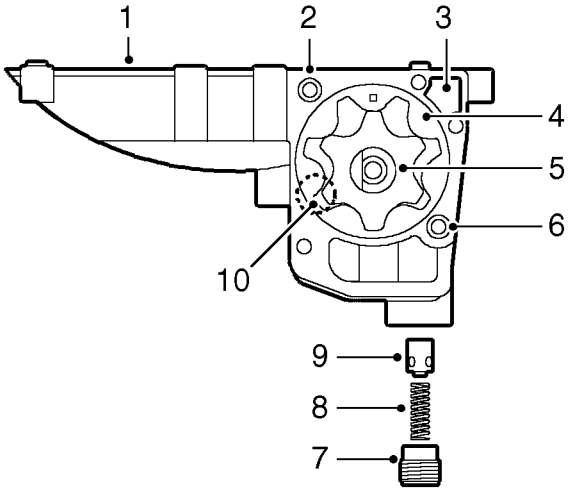

M12 4719

1. Stiffener plate
2. Ring dowel
3. Outlet port
4. Outer rotor
5. Inner rotor
6. Spring dowel
7. Oil pressure relief valve cap
8. Oil pressure relief valve spring
9. Oil pressure relief valve plunger
10. Inlet port

The eccentric rotor oil pump is integrated with the stiffener plate and contains no serviceable parts except for the pressure relief valve spring. The oil pump drive sprocket is attached to the front of the stiffener plate and is driven through a chain and sprocket system.

A pressure relief valve is included at the outlet side of the oil pump to restrict oil pressure at high engine speeds by recirculating oil through the relief valve back around the pump to the inlet. The relief valve and spring is a plunger type. When oil pressure is great enough to lift the plunger, oil is allowed to escape past the plunger to relieve pressure and prevent further rise.

Oil is delivered to the pump from the pick-up through a channel in the stiffener plate. The outlet side of the oil pump delivers pressurised oil flow to the engine block main oil delivery gallery through a port in the stiffener plate.

Piston lubrication jets

Piston lubrication jets are fitted to the cylinder block to provide lubrication to the cylinder walls and to the piston underskirt for cooling the pistons and lubricating the gudgeon pins. The input port to each lubrication jet mates with a port provided in each mounting position tapped at the underside of the cylinder block from the main oil delivery gallery. When oil pressure is sufficient to supply flow through the jets, oil is squirted to the inside of the cylinder walls to provide piston to wall lubrication and cooling and to the underside of the piston skirt at the bottom of the piston stroke (gallery cooled piston). The squirt jets also provide splash feed lubrication supply to the small end bearings of the connecting rods.

Each lubrication jet is fixed to a mounting position on the underside of the engine block by a single Torx screw.

Chain lubrication jet

A chain lubrication jet is located on the front face of the cylinder block, behind the front engine timing chain cover. The inlet port to the lubrication jet mates with an oil supply port from the cylinder block main oil delivery gallery. The lubrication jet is fixed to the front of the engine block by a single screw. Additional chain lubrication is provided by oil supply through a small aperture tapped from the cylinder head oil delivery gallery.

Crankshaft

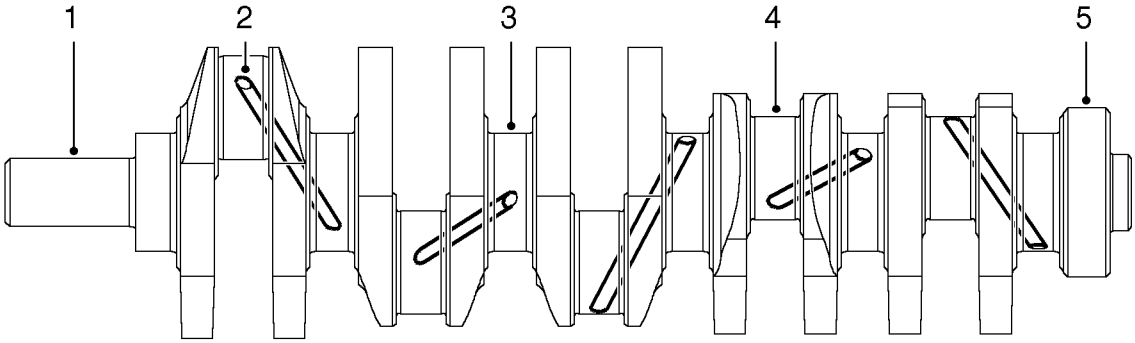

M12 4723

1. Front end to crankshaft sprocket
2. Oil supply cross-drillings
3. Main journals
4. Big-end journals
5. Rear end to flywheel

The crankshaft is constructed from cast iron and is surface-hardened. The areas between the crankshaft journals and the adjoining webs and balance weights are compressed using the cold roll process to form journal fillets.

Cross-drillings in the crankshaft between adjoining main and big-end bearings are used to divert lubrication oil to the big-end bearings.

A torsional vibration damper is attached to the crankshaft pulley by three bolts.

The crankshaft is carried in six main bearings, with end-float being controlled by thrust washers positioned on both sides of No. 3 main bearing.

Main bearings

There are six main bearings used to carry the crankshaft. Each of the bearing caps are of cast iron construction and are attached to the cylinder block by two bolts.

The bearing shells are of the split cylindrical type. The upper half bearing shells are grooved to facilitate the supply of lubrication oil to the bearings and fit into a recess in the underside of the cylinder block. The lower half bearing shells are smooth and fit into the bearing caps.

Steel-backed, thrust washers are included at each side of No. 3 main bearing to control crankshaft end-float. One side of each of the thrust washers is grooved, the grooved side of each of the thrust washers is fitted facing outward from No. 3 main bearing.

CYLINDER HEAD COMPONENTS

The cylinder head components are described below:

Cylinder head
The cylinder head is of aluminium construction. It is not possible to reface the cylinder head if it becomes worn or damaged. An alloy camshaft carrier is bolted directly to the upper surface of the cylinder head. Two dowels are included in the cylinder head upper face for correct location of the camshaft carrier.

The EU3 cylinder head has a single internal fuel rail for delivering fuel to the injectors and an external fuel pipe for returning spill fuel back to the fuel connector block. Therefore, pre EU3 and EU3 cylinder heads are not interchangeable.

CAUTION: The cylinder head incorporates drillings for the fuel injection system, any contamination which enters these drillings could cause engine running problems or injector failure. It is therefore, essential that absolute cleanliness is maintained when carrying out work on the cylinder head.

The camshaft carrier and cylinder head assembly is attached to the cylinder block by twelve cylinder head retaining bolts which pass through the camshaft carrier and the cylinder head to secure the assembly to the cylinder block.

CAUTION: The valve heads, tips of the injectors and glow plugs protrude below the face of the cylinder head and will be damaged if the cylinder head is stored face down.

The camshaft is located between the cylinder head and the camshaft carrier, and the bearing journals are line bored between the two components to form a matched pair.

CAUTION: Always fit plugs to open connections to prevent contamination.

The valve guides and valve seat inserts are sintered components which are an interference fit to the cylinder head. The cylinder head machining also provide the locations for the electronic unit injectors, glow plugs, hydraulic lash adjusters, finger followers and low pressure fuel rail.

Cooling to the cylinder head is provided by coolant flow through a water jacket machined into the cylinder head. Drillings through the block provide lubrication channels for pressurised oil supply to cylinder head components such as the lash adjusters, finger followers, rocker arms and camshaft bearings.

A coolant outlet elbow is fitted to the front LH side of the cylinder head to allow flow of coolant from the cylinder head back to the radiator. A metal gasket is used to seal the joint between the water outlet elbow and the cylinder head. A coolant temperature sensor is located in a port in the side of the water outlet elbow for monitoring coolant temperature.

A stub pipe is connected at the front RH side of the cylinder block above the timing cover which connects a pipe to supply oil to the vacuum pump. The timing chain tensioner adjuster is screwed in a thread in the cylinder head at a location on the front RH side of the engine below the oil feed port for the vacuum pump.

An access hole for the camshaft gear is included at the front of the cylinder head which is sealed with a plastic plug and rubber 'O' ring. A press-fit core plug for the chain chest is located on the front face of the cylinder head.

A press-fit core plug for the cylinder head water jacket is located at the rear of the cylinder head and a threaded brass plug for the water jacket is located on the LH side of the cylinder head beneath the exhaust manifold assembly.

Fuel connector block

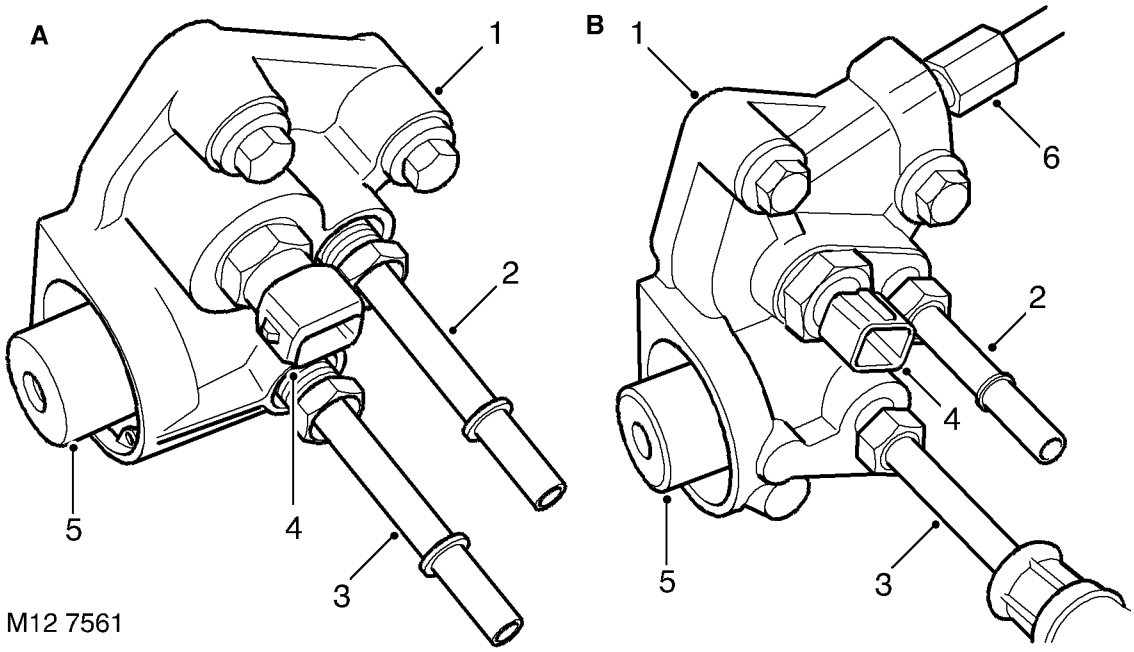

Type A - Non EU3 Models - Engine Serial No. Prefixes 10P to 14P
Type B - EU3 Models - Engine Serial No. Prefixes 15P to 19P

1. Fuel connector block assembly
2. Outlet stub pipe
3. Stub pipe - to fuel cooler
4. Fuel temperature sensor
5. Fuel pressure regulator
6. Spill return fuel connection (EU3 models only)

A cast and machined aluminium alloy fuel connector block assembly is located at the rear RH side of the cylinder head, attached by three flanged bolts. A metal gasket is used to seal the faces between the fuel connector block and the cylinder head, which must be replaced every time the fuel connector block is removed.

CAUTION: The cylinder head incorporates drillings for the fuel injection system, any contamination which enters these drillings could cause engine running problems or injector failure. It is therefore, essential that absolute cleanliness is maintained when carrying out work on the cylinder head.

CAUTION: The valve heads, tips of the injectors and glow plugs protrude below the face of the cylinder head and will be damaged if the cylinder head is stored face down.

Camshaft carrier
The cast aluminium alloy camshaft carrier is bolted to the cylinder head by thirteen screws. The camshaft carrier and cylinder head assembly is attached to the cylinder block by twelve cylinder head retaining bolts which pass through the camshaft carrier and the cylinder head to secure the assembly to the cylinder block.

The carrier is machined together with the cylinder head to form a matched pair for carrying the camshaft.

Non-return valve
A non-return valve is located at the front, bottom LH side of the cylinder head. The non-return valve prevents oil from draining from the lash adjusters and is an integral component within the cylinder head and is non-serviceable.

Camshaft
The camshaft is machined from cast steel and is located between the cylinder head and the camshaft carrier and the six bearing journals are line bored between the two components to form a matched pair. The machined camshaft has 15 lobes. Ten lobes operate the inlet and exhaust valves through hydraulic lash adjusters and finger followers which are located below the camshaft. Five larger lobes activate the injector rockers which are located above the camshaft on the rocker shaft and are used to generate fuel pressure in the EUI injectors.

The camshaft sprocket is driven via a Duplex chain connected to the crankshaft sprocket at a speed ratio of 2:1. The camshaft sprocket is fixed to the front end of the camshaft by three bolts.

Camshaft lubrication is by splash and channel fed via pressurised oil flowing through galleries in the cylinder head.

Rocker shaft and rocker arms

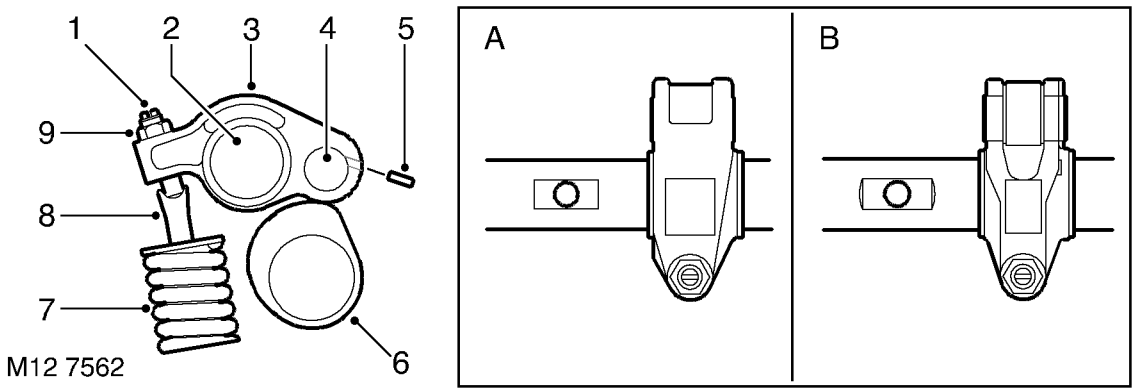

Type A - Non EU3 Models - Engine Serial No. Prefixes 10P to 14P
Type B - EU3 Models - Engine Serial No. Prefixes 15P to 19p

1. Rocker arm adjusting screw
2. Rocker shaft
3. Rocker arm
4. EUI pin and roller assembly
5. Roller pin retention slug
6. Camshaft lobe
7. Injector spring
8. Injector push-rod
9. Adjusting nut

The hollow rocker shaft is located in the camshaft carrier in six fixed mountings which sit above the camshaft. Six bolts are used to lock the rocker shaft to the camshaft carrier. The front rocker shaft bearing has a ring dowel located at the front rocker shaft mounting of the camshaft carrier for rocker shaft alignment. Two circlips hold each rocker arm in position at the relevant positions on the rocker shaft.

CAUTION: The rocker shaft from a pre EU3 engine must not be fitted to an EU3 engine. This is because the stroke of the EU3 injector has increased which requires the rocker to articulate over a larger angle.

The camshaft end of each rocker arm features a roller which is free to rotate about a pin which passes through two webs in the rocker arm, the roller pins are held in place by an interference fit retention slug passing through a hole in the front web of each rocker arm.

To correctly function against the higher loads of the EU3 engine the geometry of the contact between the injector pushrod and rocker arm adjusting screw has been modified. Both designs of adjusting screw are separately available, with the EU3 version identified by an engraved dimple on the slotted end.

Rocker shaft and rocker arm lubrication is by splash and channel fed via pressurised oil flowing through galleries in the cylinder head and through the rocker shaft.

Inlet and exhaust valves
The inlet and exhaust valves are mounted directly above the engine block cylinders.

Each valve is a forged and ground solid one-piece head and stem which is hardened by heat treatment. The stems are chrome-plated then ground for improved heat transfer, wear resistance and smooth operation. It is not possible to recut the valve's face angle, but the valves can be lapped to their seats using grinding paste.

The valve springs are made from spring steel and are of the parallel single-coil type. The bottom end of the spring rests on the flange of a spring seal which has a centre bore that locates on a recess ground into the lower valve stem. The top end of the spring is held in place by a spring cap which is held in position at the top end of the valve stem by split taper collets. The taper collets have grooves on the internal bore that locate in grooves ground into the upper stems of the valves.

The valve seats and valve guides are sintered and are an interference fit into the cylinder head. The valve seats and guides are non-serviceable.

Finger followers and lash adjusters

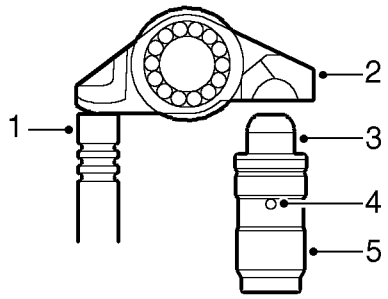

M12 4727

1. Valve stem
2. Finger follower
3. Lash adjuster plunger
4. Oil supply hole
5. Lash adjuster body

The valves are operated through finger followers and lash adjusters, actuated by the camshaft lobes. When the camshaft lobe presses down on the top of a finger follower roller mechanism, the respective valve is forced down opening the inlet or exhaust port.

The lash adjuster body contains a plunger and two chambers for oil feed and pressurised oil. Pressurised oil is supplied to the lash adjusters via the oil galleries in the cylinder head and through a hole in the side of the lash adjuster body. The oil passes into a feed chamber in the lash adjuster then through to a separate pressure chamber via a one way ball valve. Oil flow from the pressure chamber is determined by the amount of clearance between the lash adjuster outer body and the centre plunger, oil escapes up the side of the plunger every time the lash adjuster is operated, the downward pressure on the plunger forcing a corresponding amount of oil in the lash adjuster body to be displaced. When the downward pressure from the camshaft and finger follower is removed (i.e. after the trailing flank of the camshaft lobe has passed), oil pressure forces the lash adjuster's plunger up again. This pressure is not sufficient to effect the valve operation, but eliminates the clearance between the finger follower and top of the valve stem.

Timing chain guides

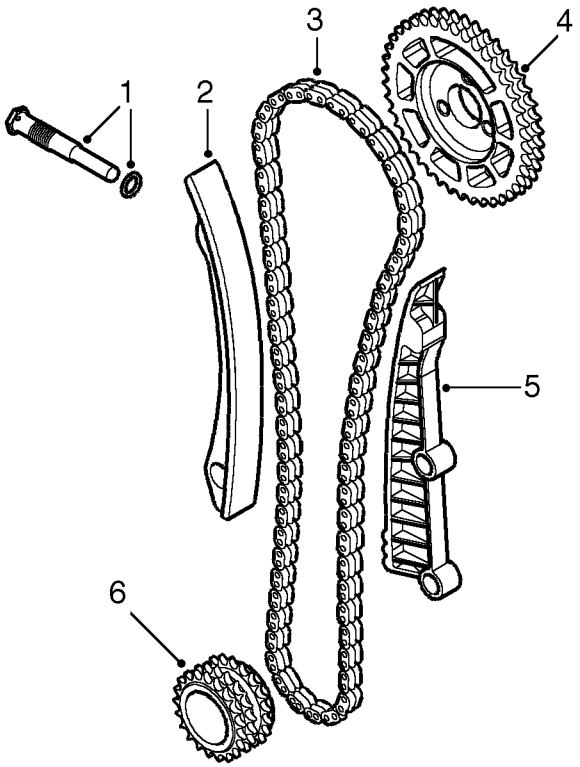

M12 4730

1. Hydraulic tensioner
2. Adjustable tensioner arm
3. Duplex timing chain
4. Camshaft sprocket
5. Fixed tensioner arm
6. Crankshaft sprocket

The crankshaft sprocket to camshaft sprocket timing chain is held taut by a tensioner arm acting on the slack side of the chain. The tensioner is automatically adjusted by means of an hydraulically operated tensioner adjuster. The drive side of the chain has a plastic guide attached to the front face of the cylinder block. The fixed guide is attached to the front of the engine block by two bolts. The tensioner arm is fixed to the front of the cylinder block by a single pivot bolt which allows the tensioner arm to pivot about its axis.

NOTE: The adjustable tensioner arm is not interchangeable between pre-EU3 and EU3 vehicles due to a change in geometry on the EU3 version.

CAMSHAFT COVER COMPONENTS

The camshaft cover cover components are described below:

Camshaft cover
The camshaft cover is cast from aluminium alloy and is fixed to the camshaft carrier / cylinder head assembly by thirteen bolts. The cover has spacers and sealing washers inserted into each of the thirteen bolt holes.

A breather hose is connected to a port at the top of the camshaft cover by means of a hose clip which vents crankcase gases back to the air intake via a breather valve in the air intake tract, located forward of the turbocharger in the flexible air intake duct.

A rubber seal is fitted between the camshaft cover and camshaft carrier.

An oil filler aperture is included in the top of the camshaft cover, which is sealed with a plastic cap with integral rubber seal.

CAMSHAFT TIMING CHAIN COMPONENTS

The timing chain cover and timing chain components are described below:

Timing chain cover
The timing chain cover is cast and machined aluminium alloy and is attached to the cylinder head by a bolt at the RH top of the cover and by a stud and nut at the LH top of the cover. Eight screws are used to attach the timing chain cover to the front of the engine block. The timing cover is located to the cylinder block front face by two dowels.

A viscous fan is attached to an idler pulley at the front of the engine block. The fan bearing is located on a shaft and held in place by a circlip and a bearing flange, the inner race of the fan bearing is an interference fit on the shaft. The fan idler pulley is attached to the bearing hub by three bolts and the fan itself is secured to the pulley and bearing shaft by a left-hand threaded nut.

The front of the crankshaft passes through a hole in the lower part of the timing cover. An oil seal is pressed into a recess in the front of the timing cover to seal the interface between the front of the crankshaft and the timing cover.

A stub pipe is fitted to the front RH side of the timing cover which is used to attach the oil drain pipe from the vacuum pump by means of a hose and spring clip.

Timing chains
The timing chain between the camshaft and crankshaft sprockets is a duplex type, each chain having 56 links. The timing chain is contained between a fixed plastic guide and an hydraulically adjustable plastic tensioner arm which are attached to the front of the engine block.

To cope with the higher injection loads of the EU3 engine, the timing drive between the camshaft and crankshaft has been upgraded. This requires thicker chain links to be used, therefore the individual pre EU3 and EU3 components are not interchangeable.

To distinguish between the two timing chains the links are different colours. A pre EU3 chain has blue links. An EU3 chain has bronze links.

The oil pump timing chain is a single type and traverses the oil pump sprocket and the rear crankshaft sprocket.

The timing chains are oil lubricated, with oil being provided by a chain lubrication jet and from oil flow returning back to the sump from the cylinder head. An oil hole is included at the front left hand side of the cylinder head which supplies oil from the cylinder head oil galleries.

Tensioner adjuster

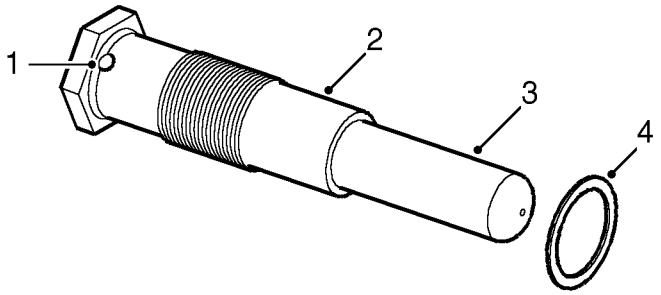

M12 4720A

1. Oil supply hole
2. Tensioner adjuster body
3. Tensioner adjuster plunger
4. Sealing ring

The tensioner adjuster is hydraulically operated, oil enters the adjuster from the pressurised oil supply flowing through the cylinder head to operate a plunger which pushes against a pivoting plastic tensioner arm. The lateral movement in the tensioner arm causes the timing chain to tension and consequently compensation for chain flutter and timing chain wear is automatically controlled. The adjuster is located at the front right hand side of the cylinder head, just above the timing chain cover and below the vacuum pump oil feed port. The adjuster body is threaded and screws into a tapping in the cylinder head. Holes are contained in the adjuster body to receive oil from the cylinder head galleries, the oil pressure is used to force the plunger out of the adjuster body to press the tensioner arm against the timing chain and so using the oil trapped in the adjuster body to act as a damper.

The internal damping of the hydraulic tensioner is tuned for each application. This means that pre-EU3 and EU3 components are not interchangeable.

Drive train sprockets

The camshaft sprocket has a double row of teeth which locate with the duplex timing chain. The sprocket is fitted to the camshaft by three bolts.

The oil pump sprocket is located on the front of the oil pump housing by a single retaining bolt. The sprocket has a single row of teeth which locates with the oil pump drive chain.

The crankshaft sprocket contains three rows of teeth, the rear row locates on the single oil pump chain and the front two rows locate with the duplex timing chain. The crankshaft sprocket has a slot in its internal diameter which locates with the Woodruff key on the crankshaft. The front of the crankshaft sprocket has a timing mark.

As a consequence of thicker chain links being used on EU3 vehicles, the thickness of the camshaft and crankshaft sprocket teeth has been reduced. Individual pre-EU3 and EU3 components are therefore not interchangeable.

CYLINDER BLOCK FLOW

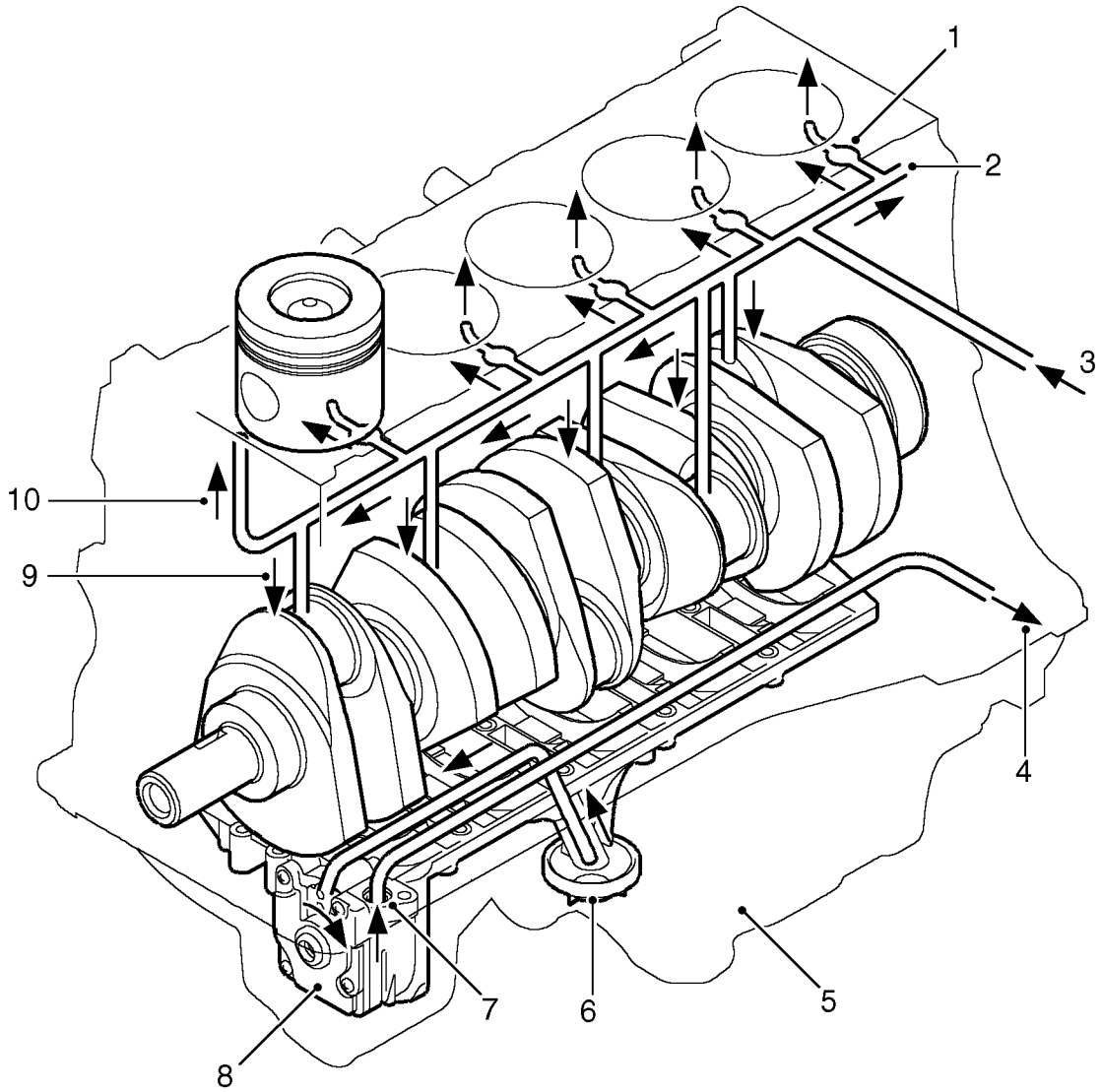

M12 4728

1. Oil squirt jets (5 off)
2. Main oil delivery gallery
3. Inflow from oil cooler housing
4. Flow to oil cooler / filters (from oil pump via cylinder block)
5. Sump
6. Oil pick-up pipe
7. Flow from oil pump (relief-valve in housing)
8. Oil pump
9. Cross-drilling supply to main and crankshaft bearings
10. To cylinder head

Oil from the sump is drawn up through a two-piece plastic pick-up which contains a mesh to siphon any relatively large pieces of material which could cause damage to the pump. The head of the pick-up is centrally immersed in the sump oil and oil is delivered to the inlet side of the eccentric rotor pump through a gallery in the stiffener plate.

Pressurised oil from the pump is passed through to the cylinder block where it is delivered to the centrifuge filter and full-flow filter via a port in the RH cylinder block which interfaces with a port in the centre gallery of the oil cooler housing. The oil pump contains an oil pressure relief valve which opens to allow oil to be recirculated back around the pump if the oil pressure increases to a high enough level.

10% of the oil flow from the pump is diverted through the centrifuge filter and returned to the sump via the centrifuge filter drain tube. The remaining 90% of the oil passes through the standard full-flow filter to the main oil gallery in the cylinder block.

OIL COOLER / FILTER FLOW (THERMOSTAT OPEN)

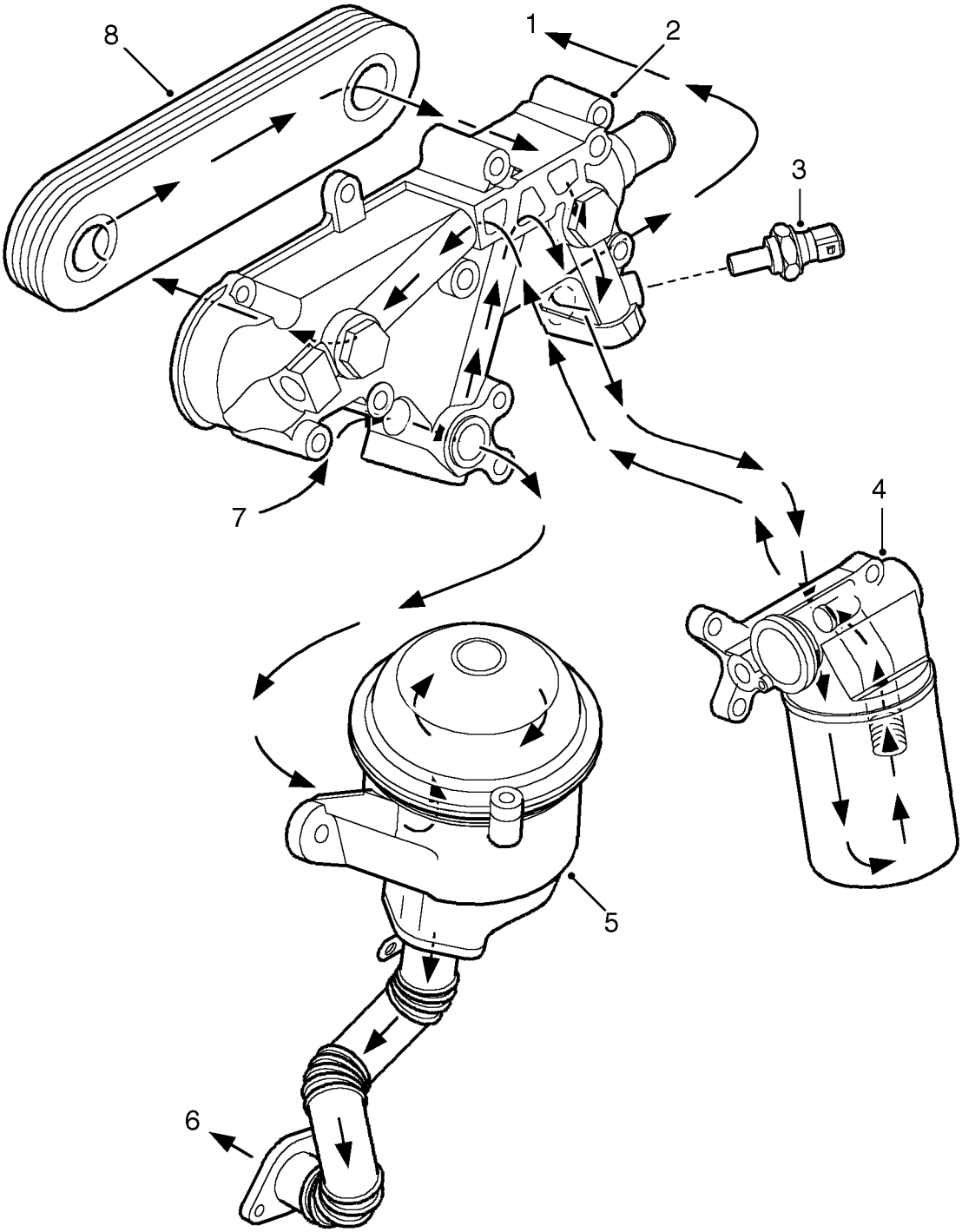

M12 4729

1. To cylinder block main gallery (from rear of oil cooler housing)
2. Oil cooler housing
3. Oil pressure switch
4. Full-flow filter
5. Centrifuge filter
6. Return to sump
7. Flow from oil pump (via cylinder block)
8. Oil cooler matrix

When the engine temperature is below 74°C, the thermostat in the full-flow filter adaptor housing is closed and a proportion of the oil flow to the main oil gallery is diverted to the oil cooler to supply an oil feed to the turbocharger bearings. Oil passes through the oil cooler to the front gallery in the oil cooler housing where there is a tapping to connect the feed pipe to the turbocharger. Oil used by the turbocharger bearings is returned to the sump through an oil drain pipe which connects to a port in the LH side of the cylinder block.

The remainder of the oil flow leaving the full-flow filter outlet is passed into the cylinder block via a port at the rear of oil cooler rear gallery.

When the oil temperature rises above 74°C the thermostat in the full-flow filter housing begins to open to allow a proportion of the oil from the full-flow filter to pass through the oil cooler before it reaches the main oil gallery in the cylinder block. In this instance, oil supply to the turbocharger bearings is fed directly from the full-flow filter without first passing through the oil cooler. Between 74°C and 88°C the thermostat valve plunger opens by about 9 mm (0.3 in) to allow proportionally more oil to flow through the oil cooler before being passed to the cylinder block main oil delivery gallery. Above 88°C the thermostat valve continues to open by about 1mm (0.03 in) for every 10°C increase in temperature until the valve is fully open, when all the oil flow to the cylinder block is forced to pass to the cylinder block via the oil cooler.

An oil pressure switch is located in a port in the rear gallery of the oil cooler housing to sense the oil pressure level before flow enters the main oil gallery in the engine block. A warning lamp in the instrument cluster is switched on if the oil pressure is detected as being too low.

Drillings from the cylinder block main oil gallery direct oil to the crankshaft main bearings and cross drillings in the crankshaft direct oil to the big-end bearings. An additional five drillings in the cylinder block supply oil at reduced pressure to the oil squirt jets for piston cooling and gudgeon pin lubrication.

Oil supply from the cylinder block is then passed to the cylinder head galleries through a non-return valve which is included as an integral item in the lower face of the cylinder head.

CYLINDER HEAD FLOW

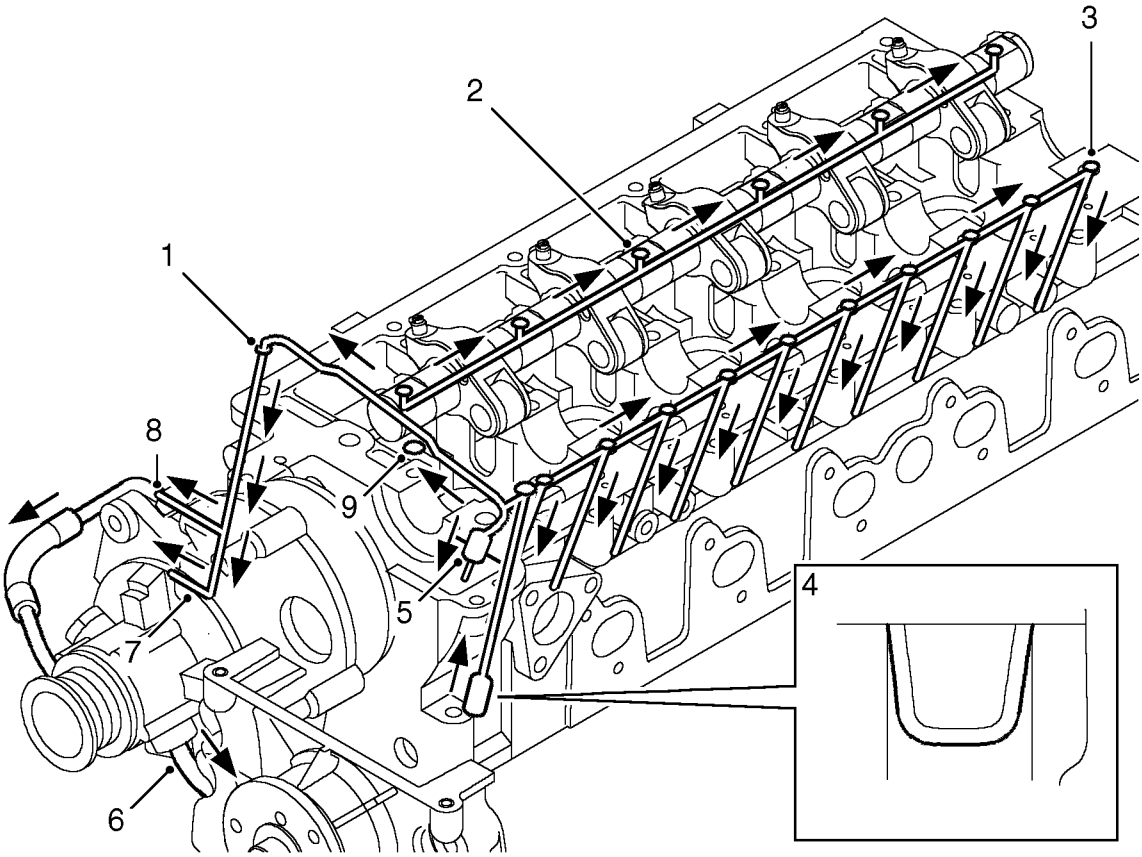

M12 4731A

1. Cast-in groove between cylinder head and camshaft carrier
2. Rocker shaft flow
3. Lash adjuster supply channels (10 off)
4. Non-return valve
5. Chain lubrication jet supply
6. Oil return from vacuum pump
7. Oil supply to timing chain tensioner adjuster
8. Oil supply to vacuum pump
9. Oil supply hole to camshaft sprocket and timing chain

Oil passes to the cylinder head from the cylinder block via a non-return valve which is included to prevent oil draining away from the lash adjusters when the engine is switched off.

Oil is passed to a cast-in groove between the top of the cylinder head and the camshaft carrier. The part of the channel on the top left hand side of the cylinder head has ten cross-drillings which supply oil to the hydraulic lash adjusters and finger followers. Lubrication oil fed to the lash adjusters passes up through the lash adjuster body and into the socket of the finger followers. The oil exits the finger followers through a small hole to lubricate the surfaces between the camshaft lobes and rollers.

An additional tapping is included at the front left hand side of the cylinder head to supply oil to the chain lubrication jet and a through hole near the front centre of the cylinder head allows a passage of oil through from the cast-in groove to lubricate the timing chain and camshaft sprocket.

At the centre front of the cylinder head, the cast-in groove channels oil into the rocker shaft via the front rocker shaft fixing. Oil flow through the rocker shaft and clearance around the rocker shaft fixings provides oil feed to the camshaft bearings.

A tapping towards the right hand side of the cylinder head diverts oil supply from the cast-in groove down to a stub pipe which attaches to a feed line to the vacuum pump. An hydraulic tensioner is located below the vacuum stub pipe which receives oil through a small hole in the side of the tensioner body to force a plunger against a plastic faced adjuster shoe for timing chain tensioning. Oil from the vacuum pump is returned to the a port in the timing chain cover via a short hose which connects to stub pipes at both ends using spring clips.

ENGINE OIL PRESSURE CHECK

Service repair no - 12.90.09.01

Check

1. Remove oil pressure switch. ***See Repair.***

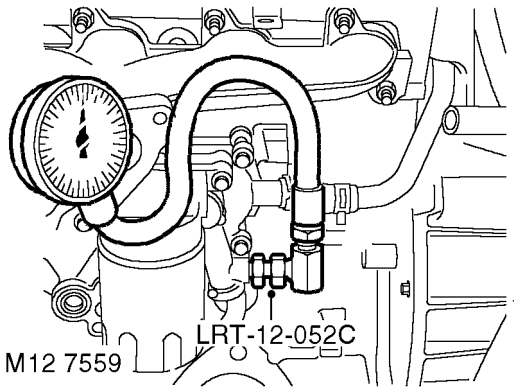

2. Connect pressure check kit **LRT-12-052C** adaptor and gauge to oil pressure switch position on oil cooler.
3. Check and if necessary, top-up engine oil.
4. Run engine at idle speed and check that oil pressure is within limits given.
5. Switch off ignition.
6. Remove oil pressure check kit **LRT-12-052C** .
7. Clean oil spillage.
8. Fit oil pressure switch. ***See Repair.***

Adjust

1. If engine oil pressure is not within specified limits, check condition of oil pump and/or main and connecting rod bearings.

CAMSHAFT

Service repair no - 12.13.02

Remove

1. Remove cylinder head gasket. ***See this Section.***

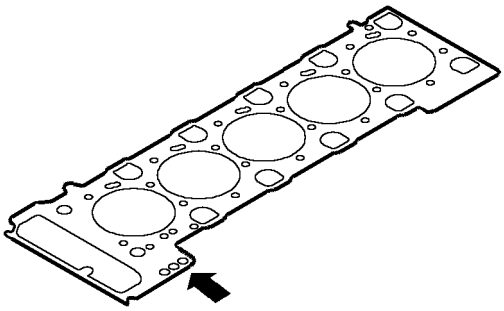

M12 7548

2. Note the gasket thickness indicator and ensure the same thickness gasket is used on refitment of cylinder head.

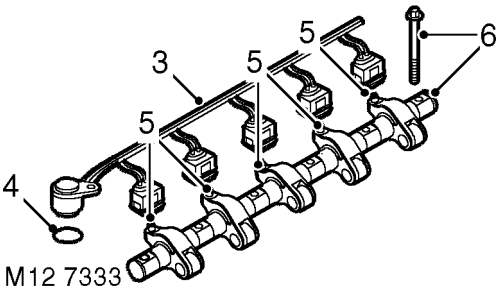

M12 7333

3. Disconnect multiplug from injector units and remove harness from camshaft carrier.
4. Remove and discard multiplug 'O' ring.
5. Loosen lock nuts and fully retract rocker adjusting screws.
6. Progressively loosen then remove and discard 6 bolts securing rocker shaft, remove shaft.

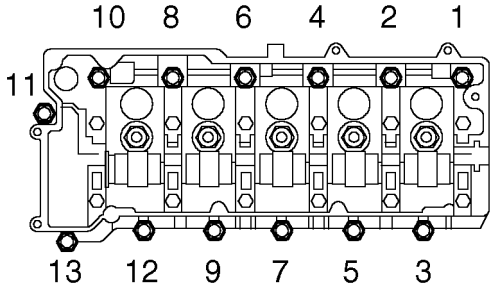

M12 7334

7. Using sequence shown, progressively loosen then remove 13 bolts securing camshaft carrier to cylinder head.

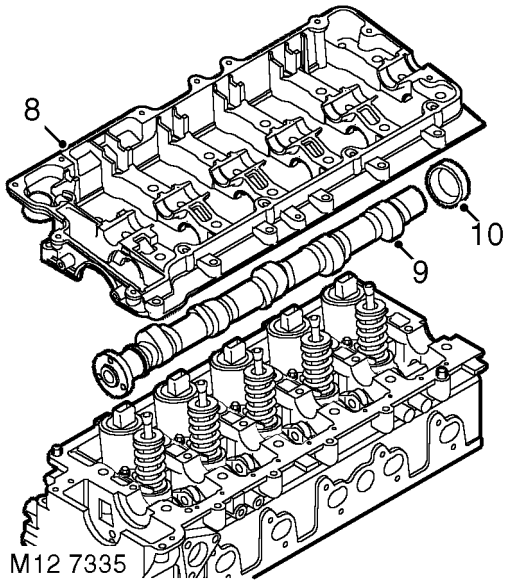

M12 7335

8. Gently tap the camshaft carrier upwards to break the sealant bond and remove carrier noting it is located by 2 dowels.
9. Remove camshaft.
10. Remove and discard camshaft rear oil seal.
11. Remove and discard lock nuts and rocker adjusting screws.
12. Check bearing surfaces in cylinder head and camshaft carrier for signs of scoring and wear.

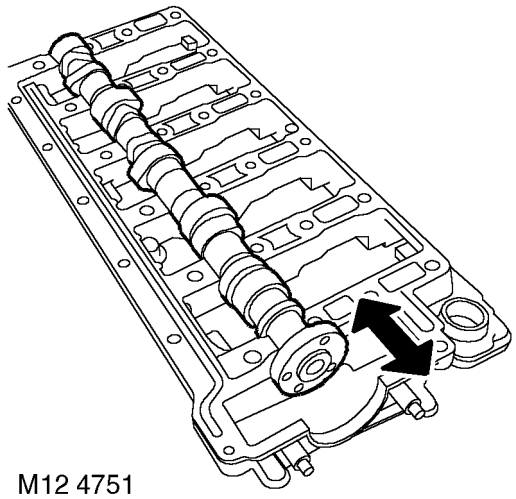

M12 4751

13. Position camshaft in camshaft carrier.
14. Check end-float of camshaft using a DTI. Camshaft end-float = 0.06 to 0.16 mm (0.002 to 0.006in).
15. Renew components as necessary to achieve correct end-float.

CAUTION: Cylinder head and camshaft carrier are machined together as an assembly. If bearing surfaces in either component are found to be damaged, complete assembly must be replaced.

NOTE: The procedure for checking camshaft bearing clearances is covered in Td5 Engine Overhaul section - Cylinder head - overhaul.

Refit

16. Using a suitable cleaning solvent, clean mating faces of cylinder head and camshaft carrier.
17. Blow out all oilways and waterways.
18. Ensure threaded holes in cylinder head and camshaft carrier are clean and dry.

CAUTION: Support each end of the cylinder head on blocks of wood. With camshaft carrier bolted down some valves and the injector nozzles will protrude from the face of cylinder head.

19. Fit new adjusting screws fully into rocker arms. Fit new lock nuts to screws but do tighten.

CAUTION: Ensure screws are correct for type of rocker arms fitted. Replacement screws for Engine Serial No. Prefixes 15P to 19P have a centre punch mark adjacent to the adjusting screw slot. These screws are not interchangeable with those fitted to Engine Serial No. Prefixes 10P to 14P.

20. Lubricate cams and bearing journals on camshaft, cylinder head and camshaft carrier with clean engine oil.
21. Position camshaft in cylinder head with the timing pin hole in the vertical position.

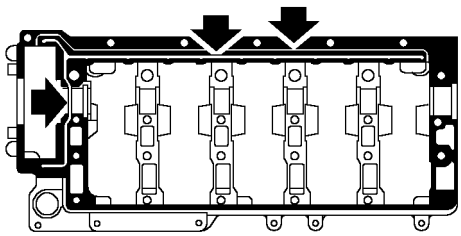

M12 7336

22. Apply an even film of sealant, Part No. STC 4600 to camshaft carrier face as shown and spread to an even film using a roller.

CAUTION: Ensure sealant does not block oilways (arrowed) or contaminate camshaft bearings. Assembly and bolt tightening must be completed within 20 minutes of applying sealant.

23. Fit camshaft carrier ensuring that it is correctly located on dowels.
24. Fit and lightly tighten camshaft carrier bolts.

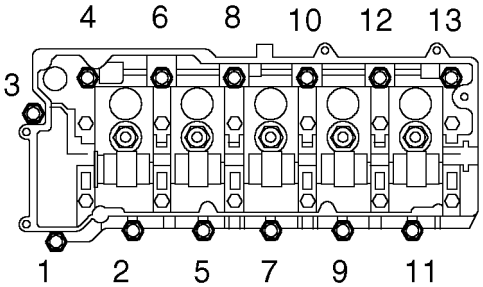

M12 7337

25. Using sequence shown, progressively tighten bolts to ***25 Nm (18 lbf.ft).***
26. Lubricate a new camshaft rear oil seal with engine oil, fit seal using a suitable mandrel.
27. Fit rocker shaft ensuring it is located on dowel, fit new bolts and working from the centre outwards, tighten bolts progressively to ***32 Nm (24 lbf.ft).***
28. Fit new 'O' ring to injector harness multiplug, fit harness and connect injector multiplugs.
29. Fit cylinder head gasket. ***See this Section.***
30. Before refitting the camshaft cover the fuel injector rockers must be adjusted.
31. Rotate engine clockwise until No. 1 injector lobe is at full lift.
32. Rotate rocker adjusting screw clockwise until the injector plunger is felt to bottom out.
33. Rotate rocker adjusting screw anti-clockwise 1 complete turn to give plunger the required bump clearance and tighten rocker adjusting screw locknut to ***16 Nm (12 lbf.ft)*** .
34. Carry out above procedure for the remaining 4 rockers.
35. After completion of rocker adjustment, slowly rotate engine clockwise 2 complete turns by hand to ensure that no injectors are bottoming out on their plungers.

PULLEY - CRANKSHAFT

Service repair no - 12.21.01

Remove

1. Remove underbelly panel. ***See CHASSIS AND BODY, Repair.***
2. Remove radiator. ***See COOLING SYSTEM, Repair.***

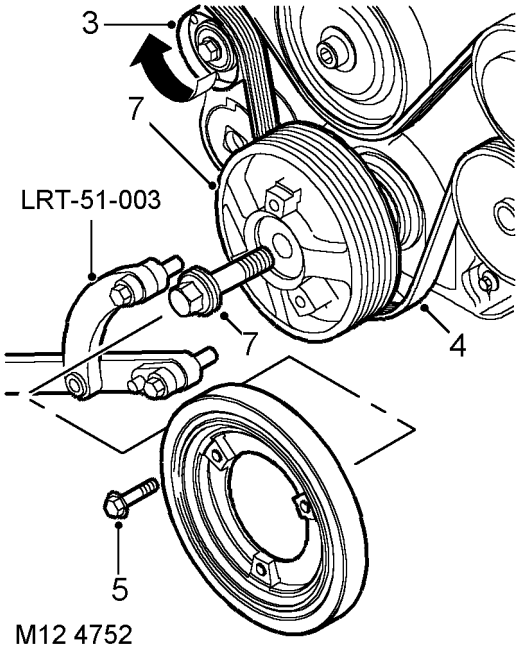

M12 4752

3. Using a 15 mm ring spanner release the auxiliary drive belt tensioner.
4. Remove auxiliary drive belt.
5. Remove 3 bolts and remove crankshaft damper.
6. Position **LRT-51-003** to crankshaft pulley and secure with 2 bolts.
7. Remove and discard crankshaft pulley bolt. Remove crankshaft pulley.
8. Remove 2 bolts and remove **LRT-51-003** .

Refit

9. Position new crankshaft pulley to vice.
10. Remove 3 bolts and remove damper from crankshaft pulley.
11. Using a lint free cloth, thoroughly clean oil seal recess and the running surface on crankshaft pulley.
12. Fit crankshaft pulley.
13. Fit **LRT-51-003** to crankshaft pulley and secure with 2 bolts.
14. Fit new crankshaft pulley bolt and tighten to ***460 Nm (340 lbf.ft).***

NOTE: It is recommended that a torque multiplier is used to tighten crankshaft pulley bolt.

15. Remove 2 bolts and remove **LRT-51-003** from crankshaft pulley.
16. Fit damper to crankshaft pulley, fit bolts and tighten to ***80 Nm (60 lbf.ft)*** .
17. Fit auxiliary drive belt.
18. Fit radiator. ***See COOLING SYSTEM, Repair.***
19. Fit underbelly panel. ***See CHASSIS AND BODY, Repair.***

OIL SEAL - CRANKSHAFT - REAR

Service repair no - 12.21.20

Remove

1. Remove flywheel. ***See this Section.***
2. Remove sump gasket. ***See this Section.***

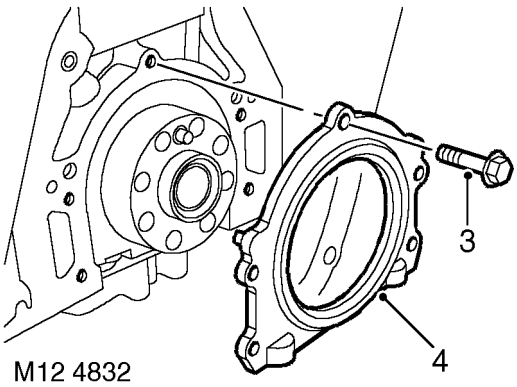

3. Remove 5 bolts securing oil seal housing to cylinder block.
4. Remove seal housing.

Refit

5. Clean seal housing mating face on cylinder block.

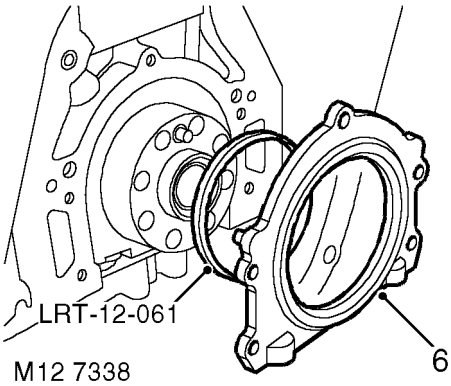

6. Position seal protector, **LRT-12-061** over crankshaft boss. Fit new seal and housing assembly and remove tool **LRT-12-061.**

CAUTION: Oil seal must be fitted dry.

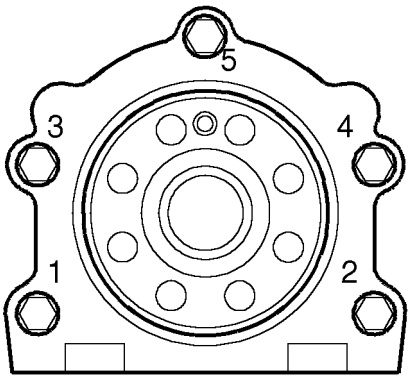

M12 7339

7. Fit oil seal housing bolts and using sequence shown, tighten to ***9 Nm (7 lbf.ft).***
8. Fit sump gasket. ***See this Section.***
9. Fit flywheel. ***See this Section.***

BEARING - SPIGOT - CRANKSHAFT

Service repair no - 12.21.45

Remove

1. Remove clutch assembly. ***See CLUTCH, Repair.***

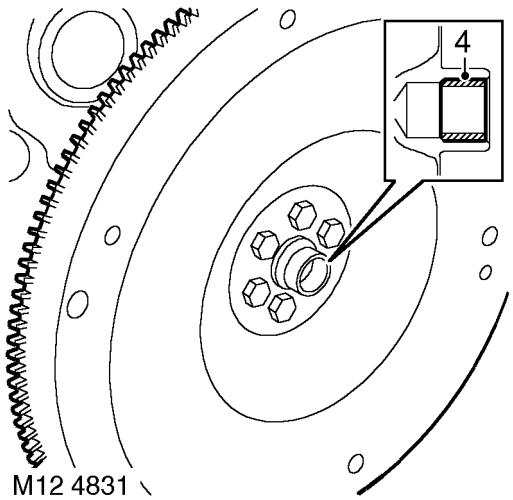

M12 4831

2. Tap a thread in spigot bush to accommodate a suitable impulse extractor.
3. Fit extractor to spigot bush.
4. Remove spigot bush from crankshaft.

Refit

5. Clean spigot bush and mating face in rear of crankshaft.
6. Fit new spigot bush to crankshaft using a suitable drift.
7. Fit clutch assembly. ***See CLUTCH, Repair.***

GASKET - CYLINDER HEAD

Service repair no - 12.29.02

Remove

NOTE: The following procedures cover engines fitted with or without an EGR cooler. The EGR cooler is bolted to the front of the cylinder head.

1. Remove underbelly panel. ***See CHASSIS AND BODY, Repair.***
2. Drain cooling system. ***See COOLING SYSTEM, Adjustment.***
3. Remove camshaft cover gasket. ***See this Section.***
4. Remove cooling fan. ***See COOLING SYSTEM, Repair.***

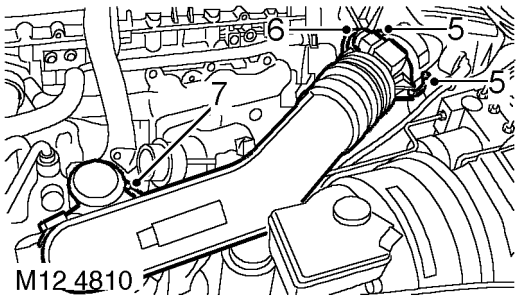

5. Release clips and disconnect air flow meter from air filter.
6. Disconnect multiplug from air flow meter.
7. Loosen clip and remove air inlet hose from turbocharger.

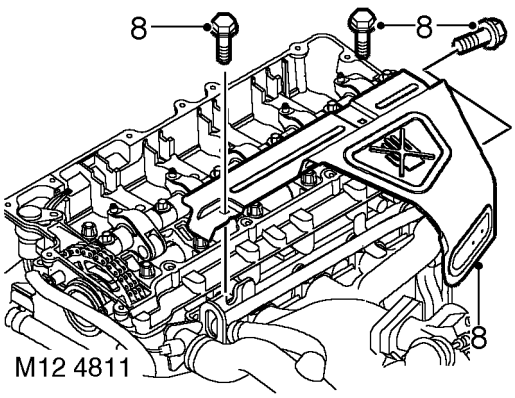

8. Remove 3 bolts and remove exhaust manifold heat shield.

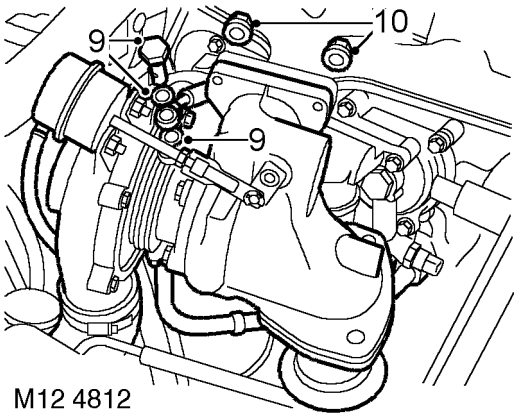

9. Remove turbocharger oil feed banjo bolt and discard sealing washers.
10. Remove 3 nuts, release turbocharger from exhaust manifold, discard gasket and tie turbocharger aside.

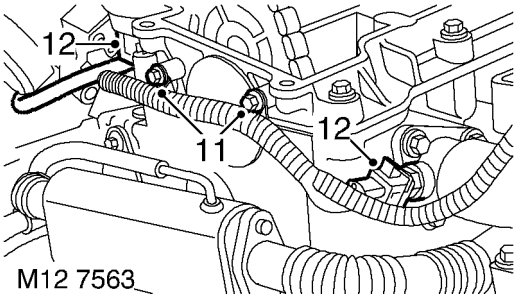

11. Remove 2 bolts securing engine harness to camshaft carrier.
12. Disconnect fuel injector, coolant and compressor sensors.

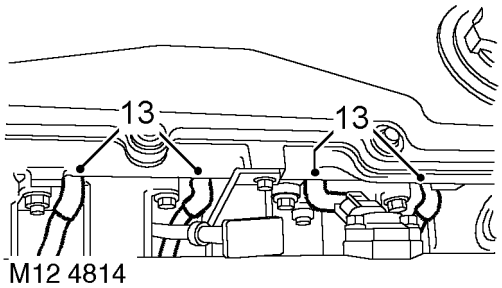

13. Disconnect 4 heater plug connectors.

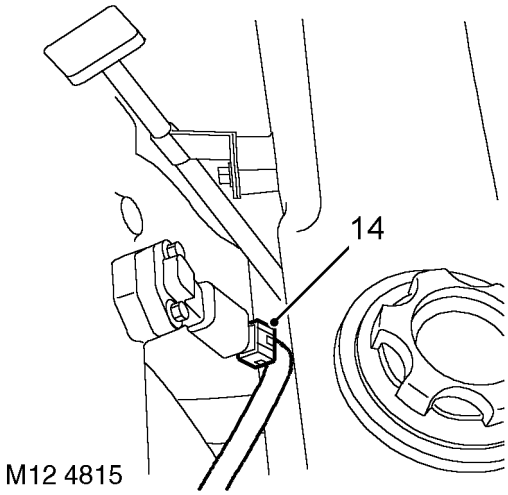

14. Disconnect MAP sensor multiplug from inlet manifold.

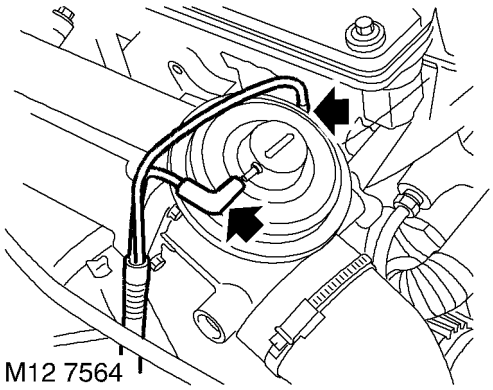

15. Position engine harness clear of inlet manifold.
16. Disconnect vacuum hose from EGR valve.
17. Loosen clip screw and disconnect air intake hose from EGR valve.

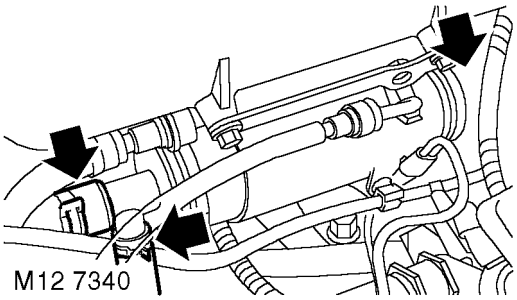

18. Release 3 clips and disconnect coolant hoses from fuel cooler.

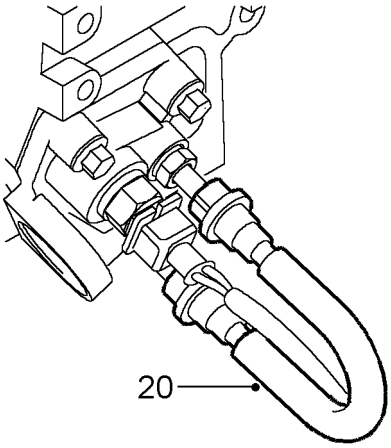

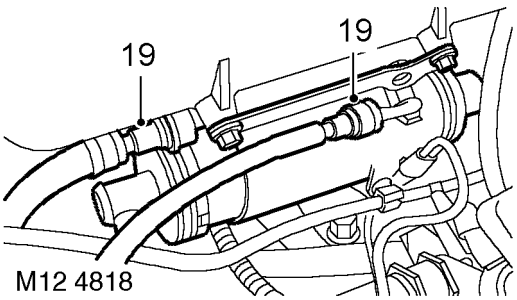

19. Disconnect fuel hoses, tank to fuel cooler and connector block on cylinder head.

CAUTION: Plug the connections.

20. Disconnect fuel hose from fuel cooler and secure to connector block on cylinder head. This is to prevent contamination of the fuel injection system.

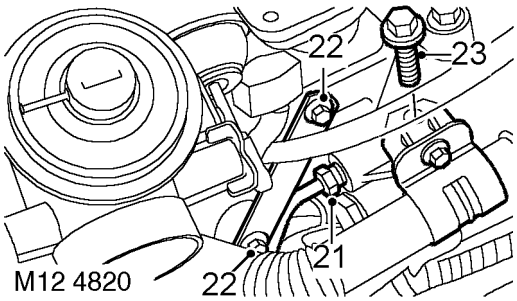

NOTE: Non EU3 model illustrated.

21. Loosen vacuum pipe union from cylinder head and discard 'O' ring.
22. Loosen 2 bolts and release alternator support bracket from cylinder head.
23. **Pre EU3 model:-** Remove bolt securing EGR valve pipe to cylinder head.
24. **EU3 model:-** Release the clips and disconnect the coolant hoses from the EGR cooler.

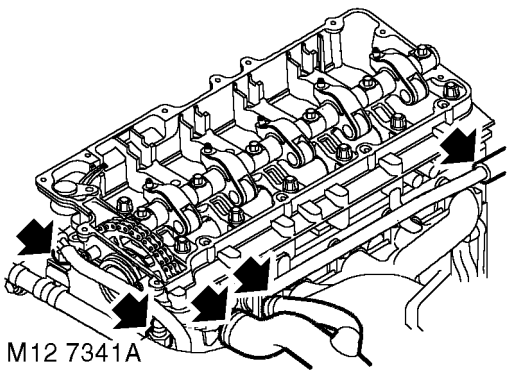

25. Release clips and disconnect top hose, heater hose and heater feed hose.
26. Remove the nut and bolt securing the cuylinder head to the timing chain cover.

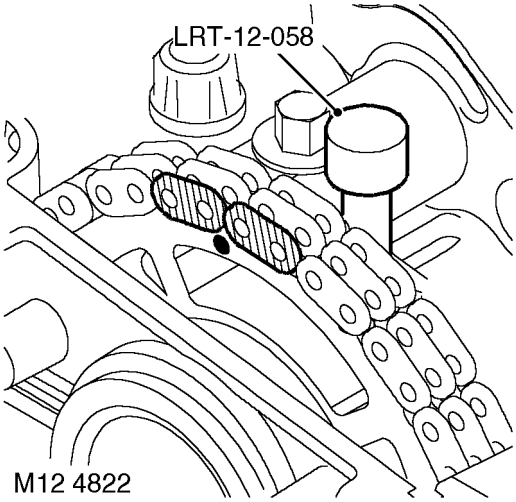

27. Rotate engine clockwise to align mark on camshaft sprocket between coloured links on timing chain.
28. Position **LRT-12-058** through camshaft carrier to lock camshaft.

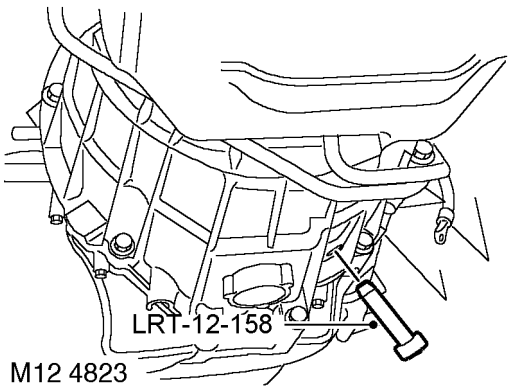

29. Position **LRT-12-158** through gearbox bell housing to lock crankshaft.

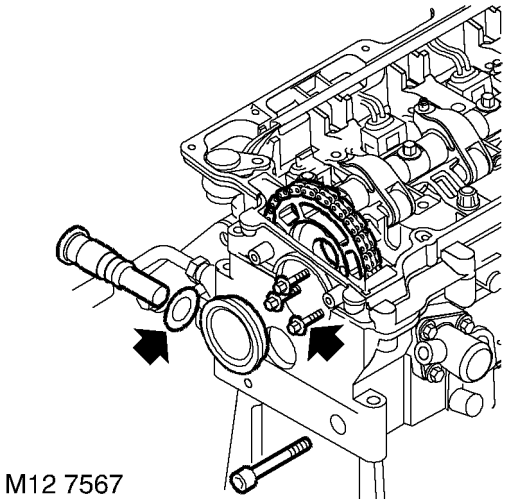

M12 7567

30. Remove timing chain tensioner and discard sealing washer.
31. Remove timing chain fixed guide Allen screw from front of cylinder head.
32. Lever out camshaft sprocket access plug from front of cylinder head and discard 'O' ring.
33. Remove 3 bolts and release sprocket from camshaft; discard bolts.

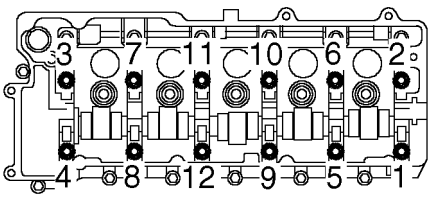

M12 7343

34. Using sequence shown, progressively loosen then remove and discard 12 cylinder head bolts together with their captive washers.

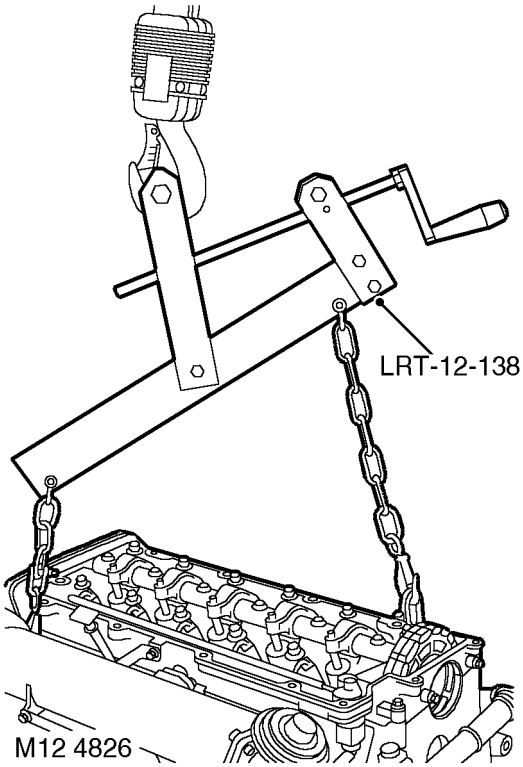

35. Using suitable lifting chains and **LRT-12-138** carefully remove cylinder head and place on wooden blocks or stands.

CAUTION: The tips of the injectors, heater plugs and valves protrude below the face of the cylinder head and could be damaged if the cylinder head is placed face down on a work bench.

36. Remove cylinder head gasket.

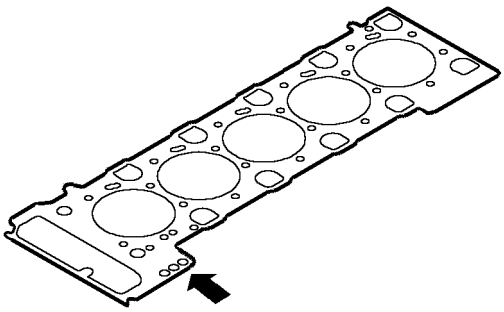

M12 7548

37. Note the gasket thickness indicator and ensure the same thickness gasket is used on refitment of cylinder head.
38. Remove and discard dowels from cylinder block.

Refit

39. Clean mating faces of cylinder head and cylinder block.

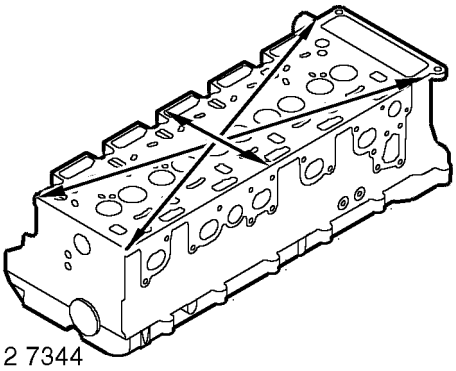

M12 7344

40. Check cylinder head for warping, across centre and from corner to corner:
Maximum warp = 0.10 mm (0.004 in)

CAUTION: Cylinder heads may not be refaced, replace cylinder head assembly if warping exceeds figure given.

41. Ensure coolant and oil passages are clean.
42. Clean dowel holes and fit new dowels.
43. Fit new cylinder head gasket of the correct thickness with the word 'TOP' uppermost.
44. Using assistance, fit cylinder head and locate on to dowels.
45. Carefully enter new cylinder head bolts together with their captive washers, **DO NOT DROP**. Lightly tighten bolts.

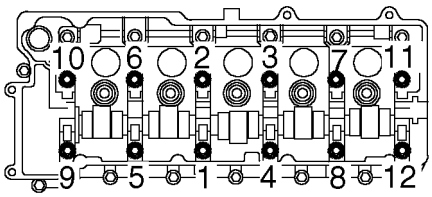

M12 4384

46. Using sequence shown, tighten cylinder head bolts to:-
Stage 1 - ***30 Nm (23 lbf.ft)***
Stage 2 - ***65 Nm (48 lbf.ft)***
Stage 3 - **90°**
Stage 4 - **Further 180°**
Stage 5 - **Further 45°**

CAUTION: Ensure correct tightening sequence is followed for all 5 tightening stages. Do not tighten bolts 315°in one operation.

47. Fit nut and bolt securing cylinder head to timing chain cover and tighten to ***25 Nm (18 lbf.ft)*** .
48. Clean camshaft sprocket and mating face on camshaft.
49. Ensure engine is set to TDC No. 1 cylinder and mark on camshaft sprocket is positioned between the 2 coloured links.
50. Position camshaft sprocket to camshaft, fit and lightly tighten new bolts then loosen bolts half a turn.
51. Clean fixed guide retaining pin and apply Loctite 242 to threads.
52. Fit and tighten fixed guide retaining pin to ***25 Nm (18 lbf.ft).***
53. Clean timing chain tensioner and fit new sealing washer.
54. Fit timing chain tensioner and tighten to ***45 Nm (33 lbf.ft)*** .
55. Tighten camshaft sprocket retaining bolts to ***36 Nm (27 lbf.ft).***
56. Remove **LRT-12-058** from camshaft.
57. Remove **LRT-12-158** from gearbox bell housing.
58. Clean access plug recess in cylinder head and fit new 'O' ring. Fit access plug.
59. Clean vacuum pump union.
60. Tighten vacuum pipe union to ***10 Nm (7lbf.ft)*** .
61. Fit bolts securing alternator bracket to cylinder head and tighten to ***25 Nm (18 lbf.ft).***
62. Connect top hose, heater hoses and secure with clips.

63. **Pre EU3 model:-** Fit bolt, EGR valve pipe to cylinder head and tighten to ***25 Nm (18 lbf.ft)*** .
64. **EU3 model:-** Connect coolant hoses to EGR cooler and secure with clips.
65. Position air intake hose to EGR valve and tighten clip screw.
66. Disconnect fuel hose from connector block and connect to fuel cooler.
67. Connect fuel hoses to fuel cooler and connector block on cylinder head.
68. Connect coolant hoses to fuel cooler and secure clips.
69. Connect vacuum hose to EGR valve.
70. Position engine harness and connect multiplugs and heater plug connectors.
71. Fit and tighten bolts, engine harness to camshaft carrier.
72. Clean exhaust manifold and mating face.
73. Fit new gasket to exhaust manifold, position turbocharger and tighten nuts to ***30 Nm (22 lbf. ft).***
74. Clean turbocharger feed hose bolt.
75. Position feed hose using new sealing washers, tighten bolt to ***25 Nm (18 lbf.ft)*** .
76. Position exhaust manifold heat shield, and tighten M6 bolts to ***10 Nm (7 lbf.ft)*** and M8 bolt to ***25 Nm (18 lbf.ft)*** .
77. Position air inlet hose to turbocharger and tighten clip screw.
78. Connect air flow meter to air filter and secure clips.
79. Connect air flow meter multiplug.
80. Fit cooling fan. ***See COOLING SYSTEM, Repair.***
81. Fit camshaft cover gasket. ***See this Section.***
82. Refill cooling system. ***See COOLING SYSTEM, Adjustment.***
83. Fit underbelly panel. ***See CHASSIS AND BODY, Repair.***

ROCKER SHAFT ASSEMBLY

Service repair no - 12.29.29

Remove

1. Remove cooling fan. ***See COOLING SYSTEM, Repair.***
2. Remove camshaft cover gasket. ***See this Section.***

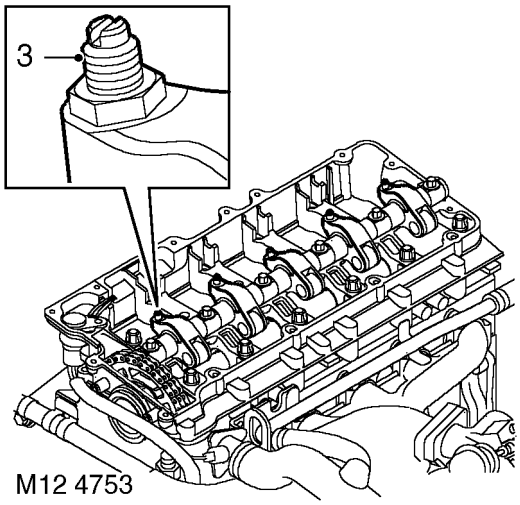

3. Loosen lock nuts and fully retract rocker adjusting screws to prevent damage on reassembly.

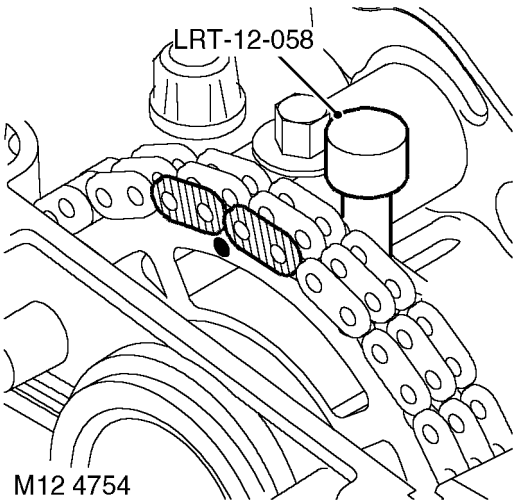

4. Rotate engine clockwise, until camshaft gear and timing chain marks are aligned and fit **LRT-12-058** through camshaft carrier to lock camshaft.

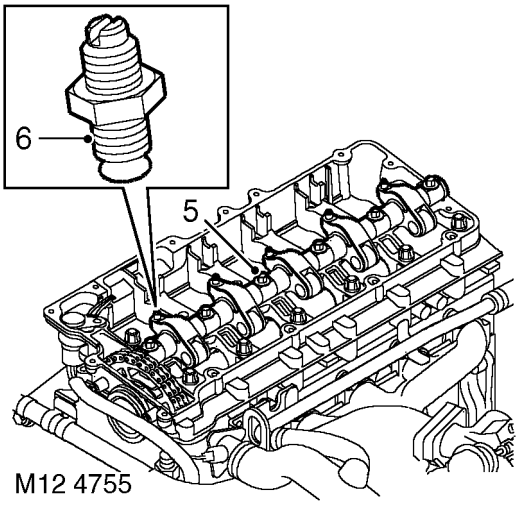

5. Progressively loosen then remove and discard 6 bolts; remove rocker shaft assembly.
6. Remove and discard lock nuts and rocker adjusting screws.

Refit

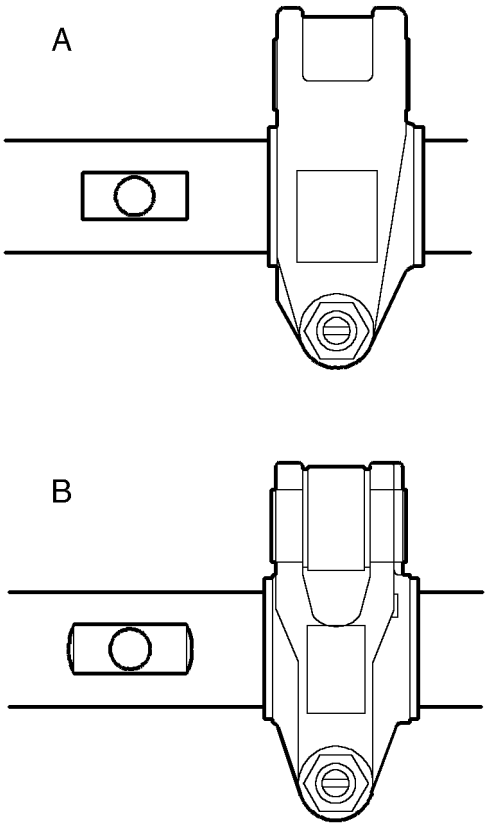

7. Clean rocker shaft and mating faces.

CAUTION: If rocker arms or shaft are to be replaced, ensure replacements are correct. Engine Serial No. Prefixes 10P to 14P are fitted with Type A rocker arms and shaft. Engine Serial No. Prefixes 15P to 19P are fitted with Type B rocker arms and shaft. Type B rocker arms and shaft may be fitted to Engine Serial No. Prefixes 10P to 14P as an assembly.

8. Fit new rocker adjusting screws into rocker arms. Fit new lock nuts to screws but do not tighten.

CAUTION: Ensure screws are correct for type of rocker arm fitted. Replacement screws for Engine Serial No. Prefixes 15P to 19P have a centre punch mark adjacent to the adjusting slot. These screws are not interchangeable with those fitted to Engine Sertial No. Prefixes 10P to 14P.

9. Fit rocker shaft ensuring it is located on dowel.
10. Fit new retaining bolts and working from the centre outwards, tighten bolts progressively to ***32 Nm (24 lbf. ft)*** .

11. Before refitting the camshaft cover, the fuel injector rockers must be adjusted.
12. Remove **LRT-12-058**.
13. Rotate engine clockwise until No. 1 injector lobe is at full lift.
14. Rotate rocker adjusting screw clockwise until the injector plunger is felt to bottom out.
15. Rotate rocker adjusting screw anti-clockwise 1 complete turn to give the plunger the required bump clearance and tighten rocker adjusting screw locknut to ***16 Nm (12 lbf.ft)*** .

CAUTION: Ensure screw does not turn as locknut is tightened.

16. Carry out above procedure for the remaining 4 rockers.
17. After completion of rocker adjustment, slowly rotate engine clockwise 2 complete turns by hand to ensure that no injectors are bottoming out on their plungers.
18. Fit camshaft cover gasket. ***See this Section.***
19. Fit cooling fan. ***See COOLING SYSTEM, Repair.***

GASKET - COVER - CAMSHAFT

Service repair no - 12.29.40

Remove

1. Remove battery cover.
2. Disconnect battery negative lead.
3. Remove 3 bolts and remove engine acoustic cover.

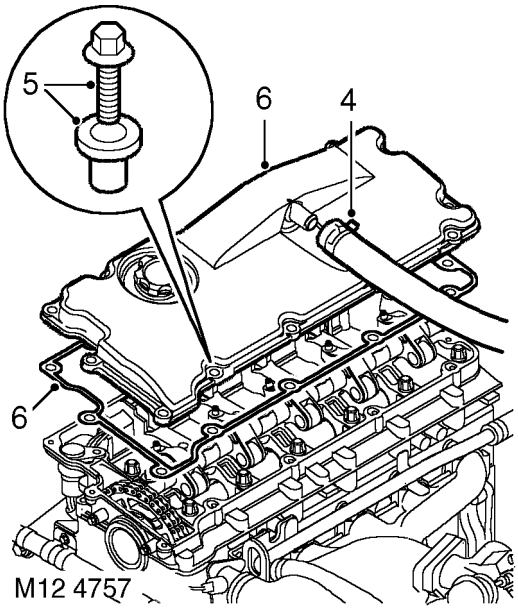

4. Release clip and disconnect breather hose from camshaft cover.
5. Remove 13 bolts, spacers and sealing washers from camshaft cover.
6. Remove camshaft cover and gasket.

Refit

7. Clean camshaft cover and mating face.
8. Renew sealing washers and spacers as necessary.

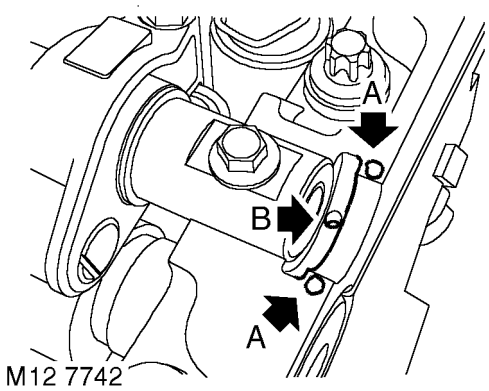

9. **Not EU3 model:-** Apply two 3 mm diameter beads of sealant, Part No.STC 5433 to areas 'A' shown on illustration.

CAUTION: Excessive use of sealant could result in blockage of oil drain hole, arrowed 'B' in illustration.

10. Fit new gasket to camshaft cover. fit cover and tighten bolts to ***10 Nm (7 lbf.ft)*** .
11. Position breather hose and secure clip.
12. Fit engine acoustic cover.
13. Reconnect battery negative lead.
14. Fit battery cover.

ENGINE AND ANCILLARIES

Service repair no - 12.41.01.99

Remove

1. Remove underbelly panel. ***See CHASSIS AND BODY, Repair.***
2. Drain engine oil.
3. Remove radiator. ***See COOLING SYSTEM, Repair.***
4. Remove turbocharger. ***See FUEL SYSTEM, Repair.***
5. Remove starter motor. ***See ELECTRICAL, Repair.***
6. Remove air filter. ***See FUEL SYSTEM, Repair.***

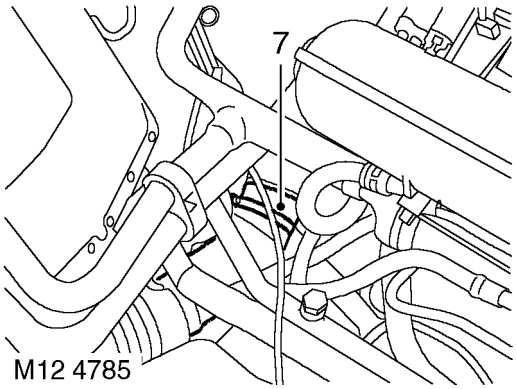

7. Loosen clip screw and release air intake hose from intake elbow.

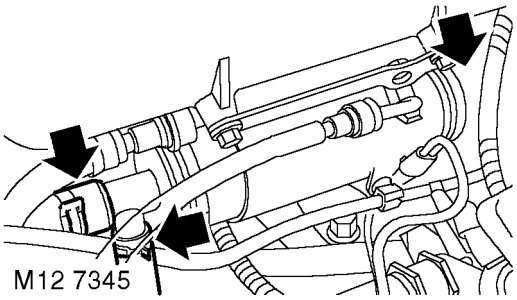

8. Release clips and disconnect coolant hoses from fuel cooler and coolant rail.

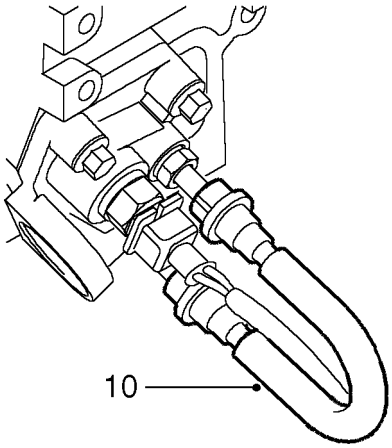

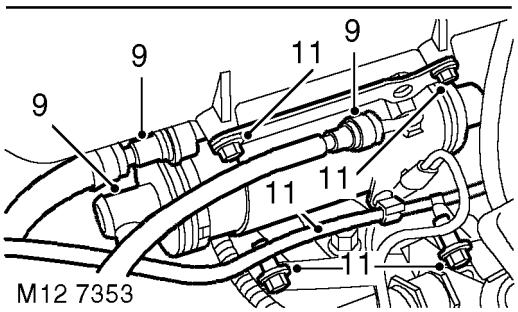

NOTE: Non EU3 model illustrated.

9. Disconnect fuel hoses, tank to fuel cooler and connector block on cylinder head.

CAUTION: Plug the connections.

10. Disconnect fuel hose from fuel cooler and secure to connector block on cylinder head. This to prevent contamination of the fuel system.
11. Release servo vacuum pipe, remove 4 bolts and remove fuel cooler.

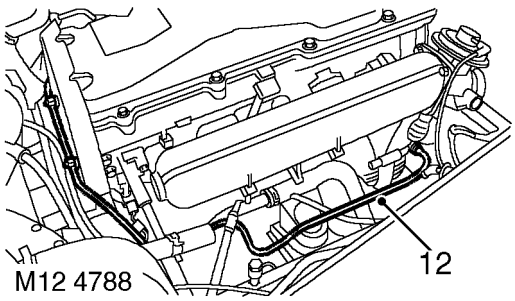

12. Release servo vacuum pipe from engine rear cover clips and vacuum pump.

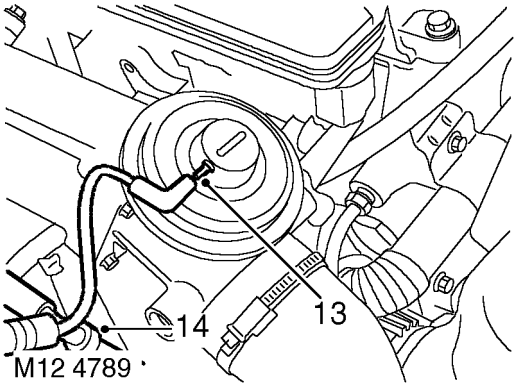

NOTE: Non EU3 model illustrated.

13. Disconnect vacuum hose from EGR valve.
14. Release EGR vacuum hose from vacuum pipe.

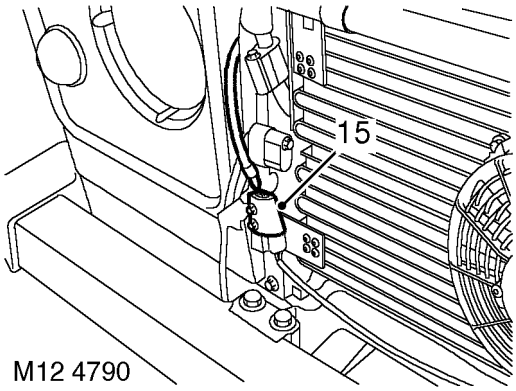

15. Disconnect multiplug from condensor cooling fan.

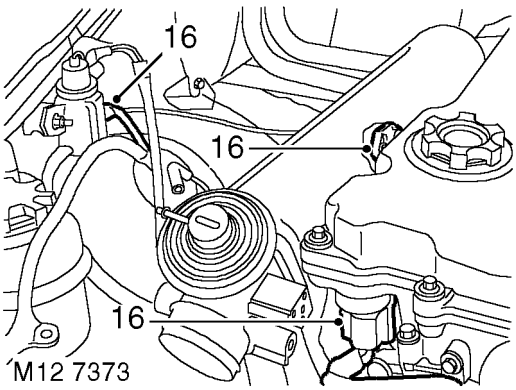

NOTE: Non EU3 model illustrated.

16. Disconnect multiplugs from EGR solenoid, inlet manifold sensor and injector harness.

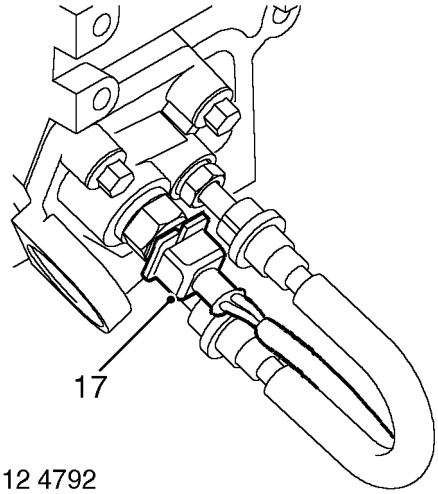

M12 4792

NOTE: Non EU3 model illustrated.

17. Disconnect multiplug from fuel temperature sensor.

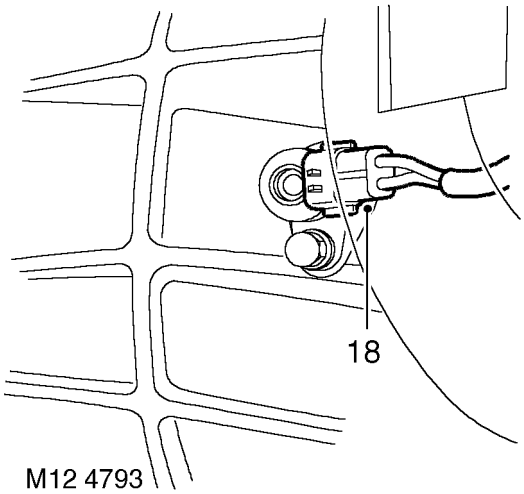

M12 4793

18. Disconnect multiplug from CKP sensor. Remove bolt securing CKP sensor, remove sensor and discard 'O' ring.

CAUTION: If fitted:- Retain CKP sensor spacer.

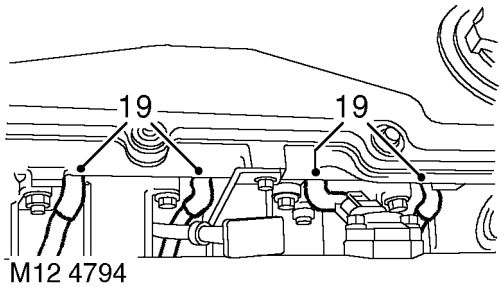

M12 4794

19. Disconnect 4 glow plug leads.

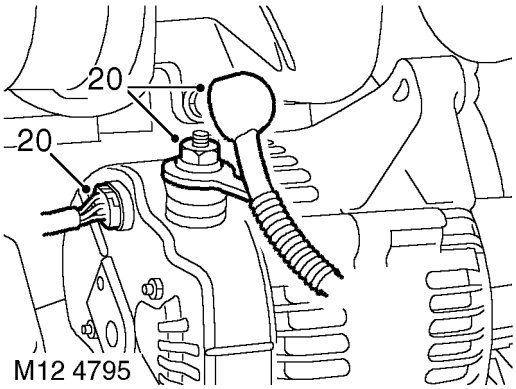

M12 4795

20. Remove nut securing alternator lead and disconnect multiplug.

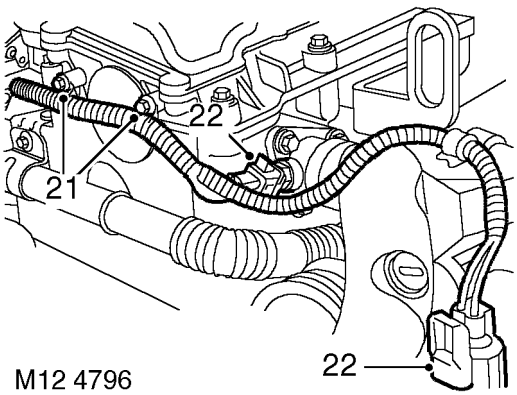

M12 4796

NOTE: Non EU3 model illustrated.

21. Remove 2 bolts securing engine harness to camshaft carrier.

22. Disconnect A/C compressor and ECT sensor multiplugs.

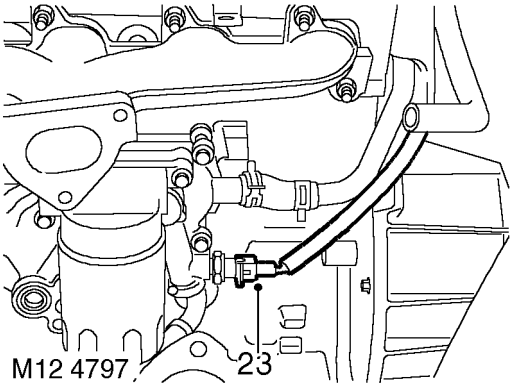

23. Disconnect oil pressure switch multiplug.
24. Release engine harness from underside of inlet manifold and tie aside.

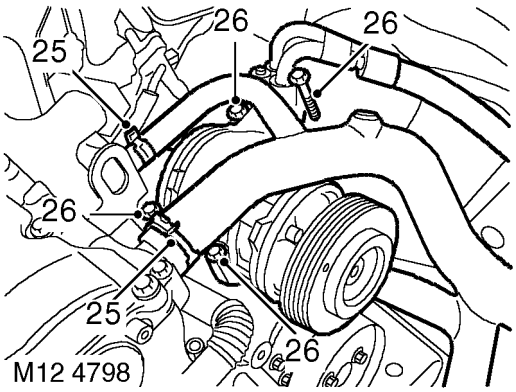

25. Release clips and remove coolant top hose from cylinder head and coolant rail.
26. Remove 4 bolts and move A/C compressor aside.

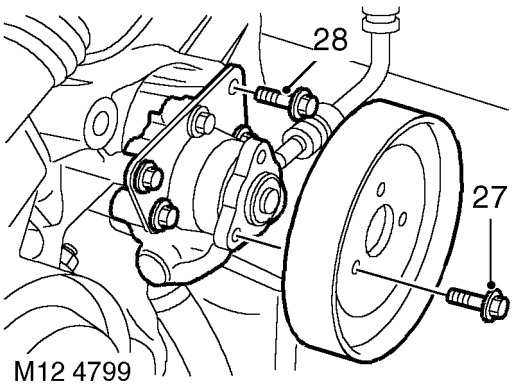

27. Remove 3 bolts and remove PAS pump pulley.
28. Remove 4 bolts and move PAS pump aside.
29. Raise vehicle on ramp.

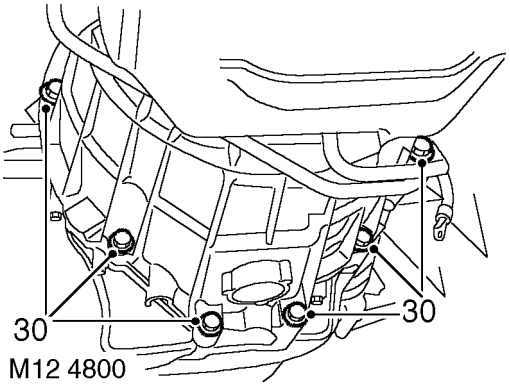

30. Remove 6 bolts securing gearbox housing to engine.
31. Lower vehicle ramp.

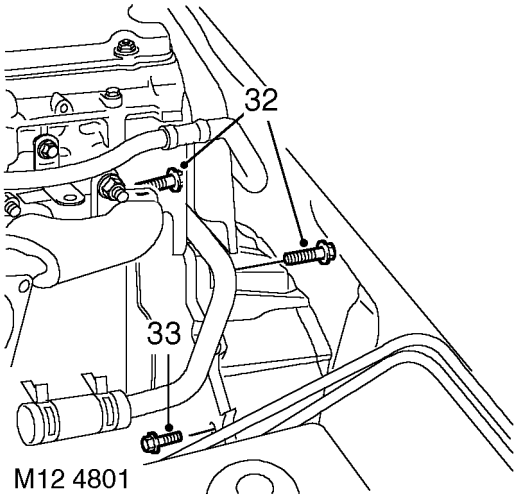

32. Remove 2 upper bolts securing gearbox housing to engine.
33. Remove bolt securing engine closing panel to gearbox.

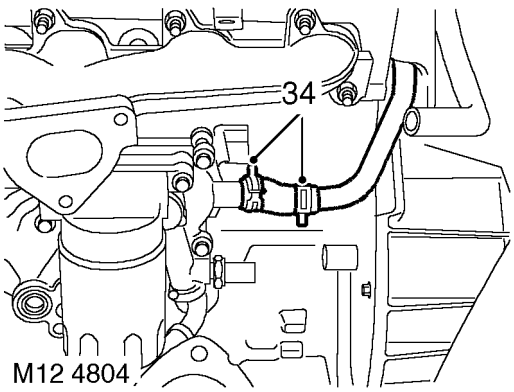

34. Release clip and coolant hose from engine oil cooler.

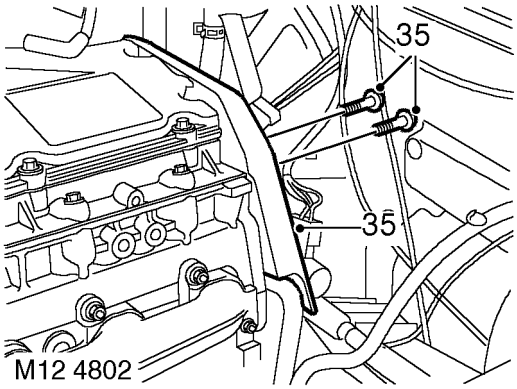

35. Remove 2 bolts and remove acoustic cover from rear of cylinder head.

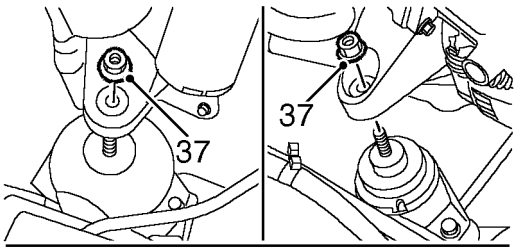

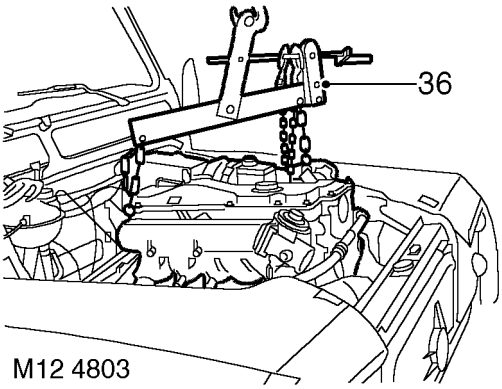

36. Fit **LRT-12-138** to suitable lifting chains and connect to lifting eyes on engine.
37. Remove 2 nuts from RH and LH front engine mountings.
38. Fit trolley jack to support gearbox.
39. With assistance raise chains and remove engine from vehicle.

Refit

40. With assistance, raise engine from bench and position in vehicle.
41. With assistance, align engine to gearbox input shaft.
42. Position 2 upper bolts securing gearbox housing to engine and tighten to ***50 Nm (37 lbf.ft).***
43. Lower engine onto mountings and tighten nuts to ***85 Nm (63 lbf.ft).***
44. Remove **LRT-12-138** from engine.
45. Fit and tighten bolt securing engine closing panel to gearbox.
46. Raise vehicle on ramp.
47. Fit bolts securing gearbox housing to engine and tighten to ***50 Nm (37 lbf.ft).***
48. Lower ramp.
49. Fit acoustic cover to rear of cylinder head and tighten bolts.
50. Position coolant hose to engine oil cooler and secure clip.
51. Position PAS pump and tighten bolts to ***25 Nm (18 lbf.ft).***
52. Position PAS pulley and tighten bolts to ***25 Nm (18 lbf.ft).***
53. Position A/C compressor and tighten bolts to ***25 Nm (18 lbf.ft).***
54. Route engine harness beneath inlet manifold and connect multiplugs to oil pressure switch, A/C compressor, and ECT sensor.
55. Fit and tighten bolts securing engine harness to camshaft carrier.
56. Connect multiplug to alternator.
57. Connect battery lead to alternator and tighten nut.
58. Clean CKP sensor and mating face.

CAUTION: If originally fitted:- Fit spacer to CKP sensor.

59. Using a new 'O' ring, fit CKP sensor, tighten bolt to ***10 Nm (7 lbf.ft)*** .
60. Connect CKP sensor multiplug.
61. Connect multiplugs to EGR solenoid, inlet manifold sensor, injector harness, fuel temperature sensor and CKP sensor.
62. Connect glow plug leads.
63. Connect multiplug to condensor cooling fan.
64. Connect vacuum hose to EGR valve.
65. Connect EGR vacuum hose to vacuum pipe.
66. Position pipe to vacuum pump and secure pipe to acoustic cover clips.
67. Position fuel cooler. Apply Loctite 242 to bolts and tighten to ***18 Nm (13 lbf.ft).***
68. Disconnect fuel hose from connector block and connect to fuel cooler.
69. Connect fuel hoses to fuel cooler and connector block on cylinder head.

70. Connect coolant hoses to fuel cooler and coolant rail and secure clips.
71. Fit air intake hose to intake elbow and tighten clip screw.
72. Fit starter motor. ***See ELECTRICAL, Repair.***
73. Fit turbocharger. ***See FUEL SYSTEM, Repair.***
74. Fit radiator. ***See COOLING SYSTEM, Repair.***
75. Fit air filter. ***See FUEL SYSTEM, Repair.***
76. Fill engine with oil.
77. Fit underbelly panel. ***See CHASSIS AND BODY, Repair.***

MOUNTING - FRONT - LH

Service repair no - 12.45.01

Remove

1. Remove centrifuge assembly. ***See this Section.***

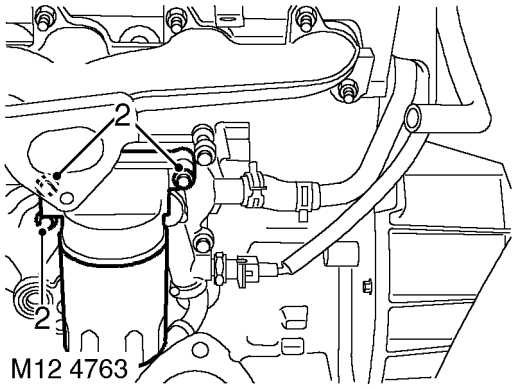

2. Remove 3 bolts, remove oil filter adaptor housing and discard gasket.
3. Fit suitable lifting chains to support engine.

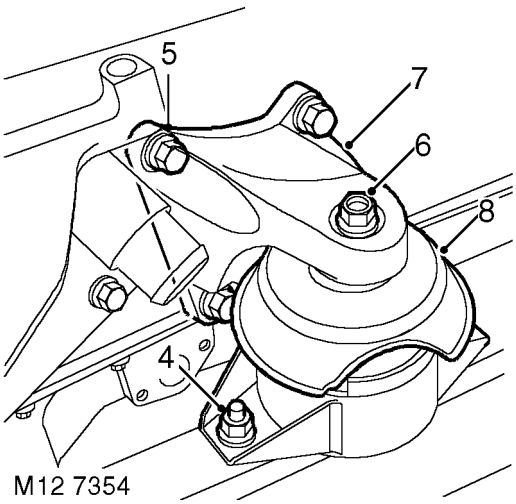

4. Remove 2 nuts securing engine mounting to chassis.
5. Remove 4 bolts securing engine mounting bracket to cylinder block.
6. Remove nut securing mounting to mounting bracket.
7. Remove mounting and mounting bracket.
8. Remove mounting shield.

Refit

9. Fit shield to mounting ensuring cut-away portion is correctly aligned.
10. Fit mounting and mounting bracket.
11. Fit mounting bracket to cylinder block bolts and tighten to ***48 Nm (35 lbf.ft)*** .
12. Fit nuts securing mounting to chassis and tighten to ***85 Nm (63 lbf.ft)*** .
13. Fit mounting to mounting bracket nut and tighten to ***85 Nm (63 lbf.ft)*** .
14. Remove engine support chains.
15. Clean oil filter adaptor housing and mating face.
16. Fit oil filter adaptor housing using a new gasket and tighten bolts to ***25 Nm (18 lbf.ft)*** .
17. Fit centrifuge assembly. ***See this Section.***

MOUNTING - FRONT - RH

Service repair no - 12.45.03

Remove

1. Remove engine acoustic cover. ***See this Section.***
2. Remove fixings, remove battery cover.
3. Disconnect battery negative lead.
4. Raise front of vehicle.

WARNING: Support on safety stands.

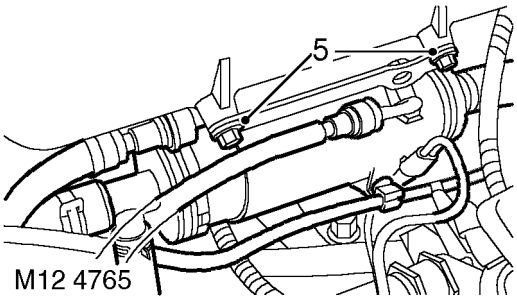

5. Remove 4 bolts, move fuel cooler to one side.
6. Fit suitable lifting chains to support engine.

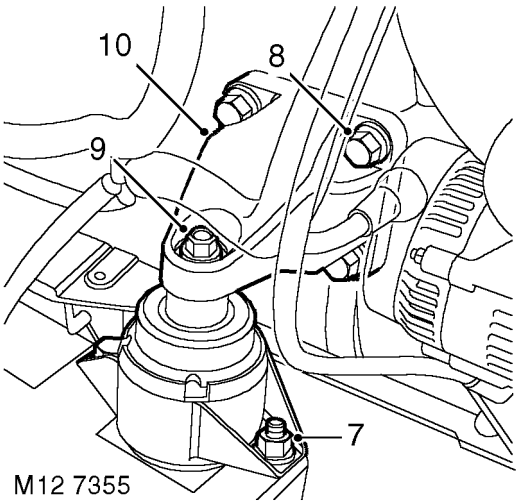

7. Remove 2 nuts securing engine mounting to chassis.
8. Remove 4 bolts securing engine mounting bracket to cylinder block.
9. Remove nut securing mounting to mounting bracket.
10. Remove mounting and mounting bracket.

Refit

11. Fit mounting and mounting bracket.
12. Fit mounting bracket to cylinder block bolts and tighten to ***48 Nm (35 lbf.ft)*** .
13. Fit nuts securing mounting to chassis and tighten to ***85 Nm (63 lbf. ft).***
14. Fit mounting to mounting bracket nut and tighten to ***85 Nm (63 lbf.ft)*** .
15. Remove engine support chains.
16. Position fuel cooler. Apply Loctite 242 to bolts and tighten to ***18 Nm (13 lbf.ft).***
17. Remove stand(s) and lower vehicle.
18. Reconnect battery negative lead.
19. Fit engine acoustic cover. ***See this Section.***

MOUNTING - GEARBOX - REAR - LH

Service repair no - 12.45.07

Remove

1. Raise vehicle on ramp.
2. Position jack to support gearbox.

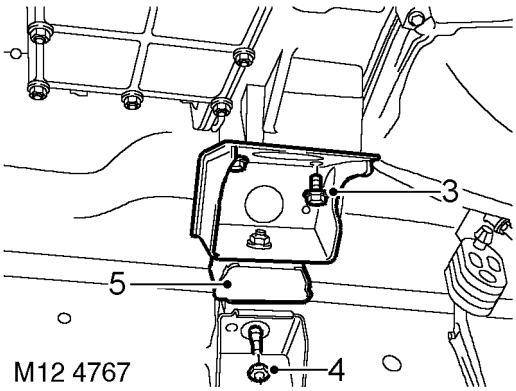

3. Remove 4 bolts securing mounting bracket to transfer gearbox.
4. Remove 2 nuts, remove mounting and mounting bracket.
5. Remove heat shield from mounting.

Refit

6. Clean mounting and mating faces.
7. Position heat shield to mounting.
8. Position mounting and mounting bracket and tighten nuts to ***48 Nm (35 lbf.ft)*** and bolts to ***85 Nm (63 lbf. ft).***
9. Lower support jack.
10. Lower vehicle.

MOUNTING - GEARBOX - REAR - RH

Service repair no - 12.45.09

Remove

1. Remove LH rear gearbox mounting. ***See this Section.***

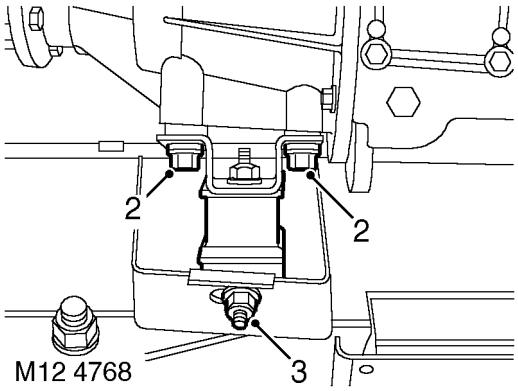

2. Remove 4 bolts securing mounting bracket to transfer gearbox.
3. Remove 2 nuts, remove mounting and mounting bracket.

Refit

4. Clean mounting and mating faces.
5. Position mounting and mounting bracket and tighten nuts to ***48 Nm (35 lbf.ft)*** and bolts to ***85 Nm (63 lbf.ft).***
6. Fit LH rear gearbox mounting. ***See this Section.***

FLYWHEEL

Service repair no - 12.53.07

Remove

1. Remove clutch assembly. ***See CLUTCH, Repair.***
2. Remove and discard 8 bolts securing flywheel to crankshaft and remove flywheel.

NOTE: Dowel located.

Refit

3. Clean flywheel and crankshaft mating face.
4. Position flywheel to crankshaft.
5. Fit new flywheel retaining bolts and tighten by diagonal selection to:
   Stage 1 - ***40 Nm (30 lbf.ft)***
   Stage 2 - **Further 90°**

CAUTION: Do not carry out stages 1 and 2 in one operation.

6. Fit clutch assembly. ***See CLUTCH, Repair.***

FILTER - OIL

Service repair no - 12.60.04

Remove

1. Remove 3 bolts and remove engine acoustic cover.

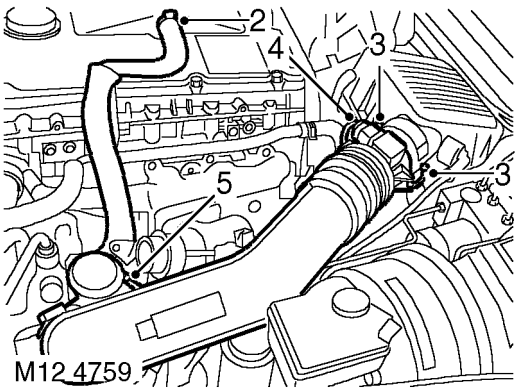

2. Release clip and disconnect breather hose from camshaft cover.
3. Release clips and disconnect air flow meter from air filter.
4. Disconnect multiplug from air flow meter.
5. Loosen clip screw and remove air inlet hose from turbocharger.

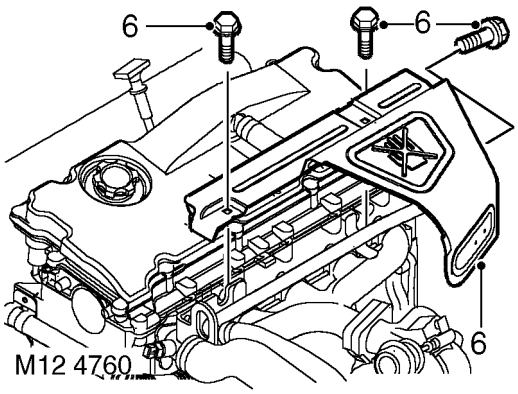

6. Remove 3 bolts and remove manifold heat shield.
7. Clean area around filter head and place a container beneath engine.

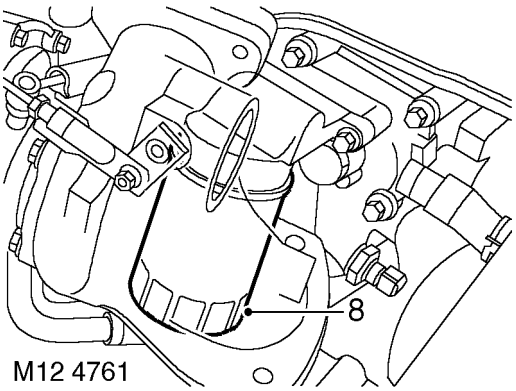

8. Using a strap wrench, unscrew and discard filter.

Refit

9. Clean mating face of filter head.
10. Lubricate sealing ring of new filter with clean engine oil.
11. Fit filter and tighten by hand until it seats then tighten a further half turn.
12. Start and run engine to check for leaks.
13. Stop engine, wait a few minutes, then check oil level.
14. Top up engine oil.
15. Position exhaust manifold heat shield and tighten 3 bolts.
16. Position air inlet hose to turbocharger and tighten clip screw.
17. Connect air flow meter to air filter and secure clips.
18. Connect air flow meter multiplug.
19. Connect breather hose and secure with clip.
20. Position engine acoustic cover.

STRAINER - OIL PICK-UP

Service repair no - 12.60.20

Remove

1. Remove sump gasket. ***See this Section.***

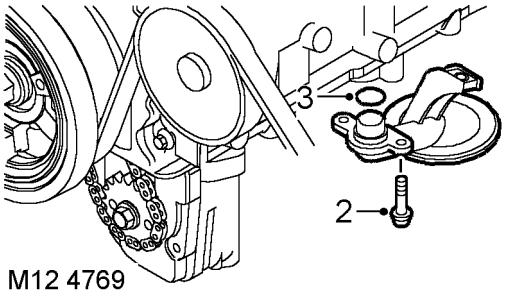

2. Remove 3 Torx screws securing oil pick-up strainer.
3. Remove and discard 'O'ring.

Refit

4. Clean oil pick-up strainer faces.
5. Fit new 'O' ring to oil pick-up strainer.
6. Fit oil pick-up strainer, apply Loctite 242 to threads of Torx screws; fit screws and tighten to ***10 Nm (7 lbf.ft).***
7. Fit new sump gasket. ***See this Section.***

PUMP - OIL

Service repair no - 12.60.26

Remove

1. Remove sump gasket. ***See this Section.***

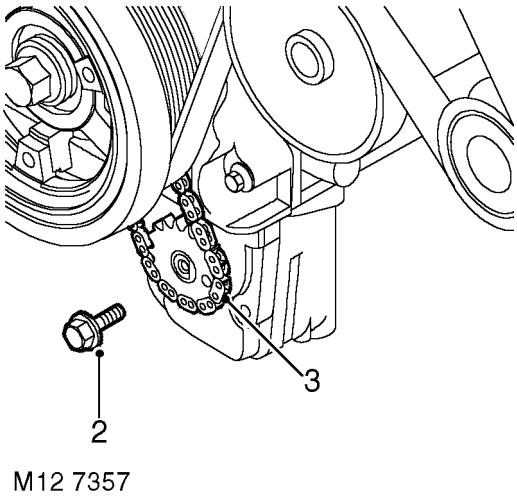

2. Remove bolt securing oil pump sprocket to oil pump drive spindle.
3. Remove sprocket from oil pump.

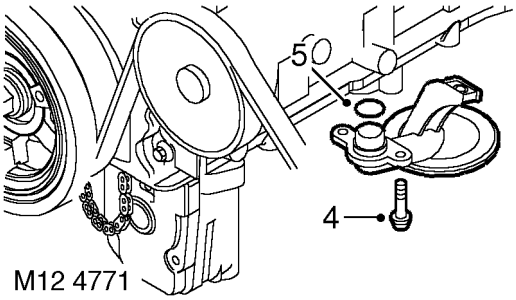

4. Remove 3 Torx screws securing oil pick-up strainer; remove strainer.
5. Remove and discard 'O' ring.

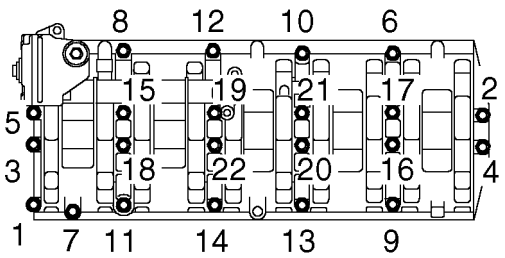

M12 7359

6. Using sequence shown, remove and discard 22 bolts securing oil pump and stiffener assembly.

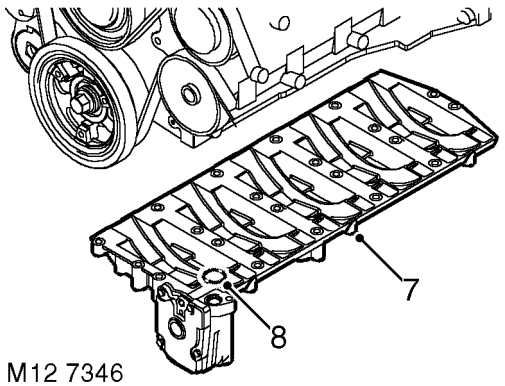

M12 7346

7. Remove oil pump and stiffener assembly.

NOTE: Dowel located.

8. Remove and discard ’O’ ring.

Refit

9. Clean mating faces of oil pump and stiffener assembly to main bearing caps and cylinder block.
10. Fit new ’O’ ring to oil pump housing.
11. Position oil pump and stiffener assembly on to cylinder block ensuring 2 dowels are correctly located.

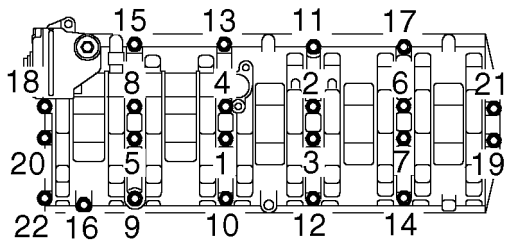

M12 7360

12. Fit new bolts and using sequence shown, tighten to ***13 Nm (10 lbf.ft)*** .
13. Lubricate a new ’O’ ring with engine oil and fit to oil pick-up strainer.
14. Fit oil pick-up strainer, apply Loctite 242 to threads of Torx screws; fit screws and tighten to ***10 Nm (7 lbf.ft).***

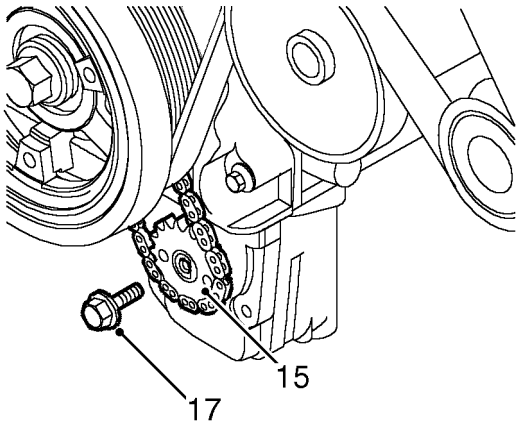

M12 7358

15. Position oil pump drive sprocket and chain on to oil pump ensuring that the 'D' shape on the drive sprocket is located on flat on the oil pump drive shaft.
16. Clean oil pump drive sprocket retaining bolt and apply Loctite 242 to bolt threads.
17. Fit oil pump drive sprocket retaining bolt and tighten to ***25 Nm (18 lbf.ft).***
18. Fit new sump gasket. ***See this Section.***

GASKET - ENGINE TO SUMP

Service repair no - 12.60.38

Remove

1. Remove battery cover.
2. Disconnect battery negative lead.
3. Remove exhaust front pipe. ***See MANIFOLD AND EXHAUST SYSTEM, Repair.***
4. Drain engine oil.

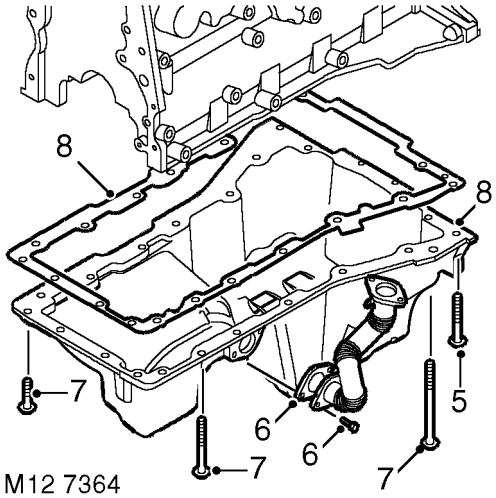

M12 7364

5. Loosen 4 bolts securing sump to gearbox bell housing.
6. Remove 2 bolts securing centrifuge drain pipe to sump and discard gasket.

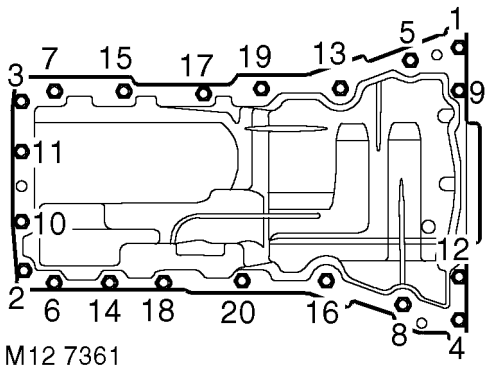

M12 7361

7. Using sequence shown and noting their fitted position, remove 20 bolts securing sump.
8. Remove sump, remove and discard gasket.

CAUTION: Do not lever between sump and cylinder block.

Refit

9. Clean sump and mating faces.

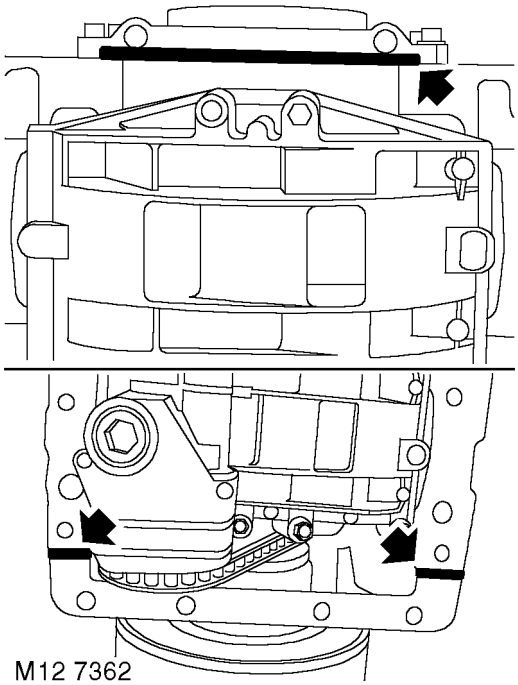

10. Apply a bead of sealant, Part No. STC 3254 to joint faces of timing chain cover and crankshaft rear oil seal.
11. Position new sump gasket.

CAUTION: Gasket must be fitted dry.

12. Position sump, fit bolts ensuring they are in their correct fitted position, lightly tighten bolts.
13. Fit bolts securing sump to gearbox bell housing and tighten to ***15 Nm (11 lbf.ft)*** .

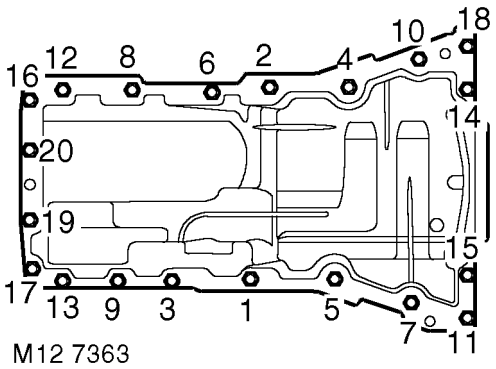

14. Using sequence shown, tighten sump bolts to ***25 Nm (18 lbf.ft)*** .
15. Tighten sump to gearbox bell housing bolts to ***50 Nm (37 lbf ft)*** .
16. Fit new gasket to centrifuge drain pipe and tighten bolts to ***10 Nm (7 lbf.ft)*** .
17. Fit exhaust front pipe. ***See MANIFOLD AND EXHAUST SYSTEM, Repair.***
18. Refill engine with oil.
19. Reconnect battery negative lead.
20. Refit battery cover.

SWITCH - OIL PRESSURE

Service repair no - 12.60.50

Remove

1. Remove fixings and remove engine acoustic cover.

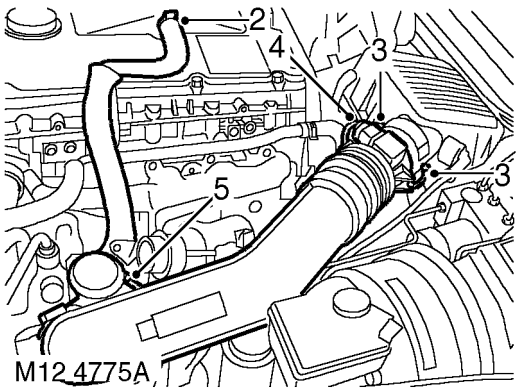

2. Release clip and disconnect breather hose from camshaft cover.
3. Release clips and disconnect air flow meter from air filter.
4. Disconnect multiplug from air flow meter.
5. Release clip screw and remove air inlet hose from turbocharger.

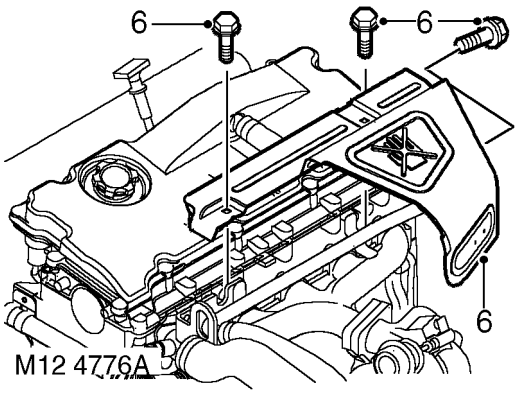

6. Remove 3 bolts and remove exhaust manifold heat shield.

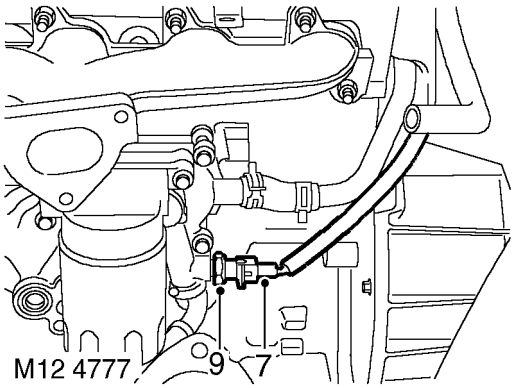

7. Disconnect multiplug from oil pressure switch.
8. Position container below switch to catch oil spillage.
9. Remove oil pressure switch.

Refit

10. Clean oil pressure switch threads.
11. Fit oil pressure switch and tighten to ***9 Nm (7 lbf.ft).***
12. Connect switch multiplug.
13. Position exhaust manifold heat shield and tighten M6 bolts to ***10 Nm (7 lbf.ft)*** and M8 bolt to ***25 Nm (18 lbf.ft)*** .
14. Position air inlet hose to turbocharger and tighten clip screw.
15. Connect air flow meter to air filter and secure clips.
16. Connect air flow meter multiplug.
17. Connect breather hose and secure clip.
18. Fit and secure engine acoustic cover.
19. Top up engine oil.

VALVE - RELIEF - OIL PRESSURE

Service repair no - 12.60.56

Remove

1. Remove sump gasket. ***See this Section.***

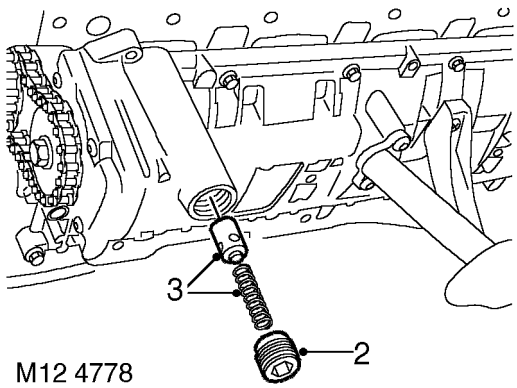

2. Remove and discard oil pressure relief valve plug from oil pump housing.
3. Remove spring and valve.

Refit

4. Clean valve and spring.
5. Clean valve seating inside oil pump housing.
6. Lubricate valve and seating.
7. Fit valve and spring to pump.
8. Apply Loctite 243 sealant to threads of a new plug.
9. Fit plug and tighten to ***23 Nm (17 lbf.ft)*** .
10. Fit sump gasket. ***See this Section.***
11. Check engine oil level, top-up if necessary.

COOLER - ENGINE OIL

Service repair no - 12.60.68

Remove

1. Drain cooling system. ***See COOLING SYSTEM, Adjustment.***
2. Remove centrifuge assembly. ***See this Section.***

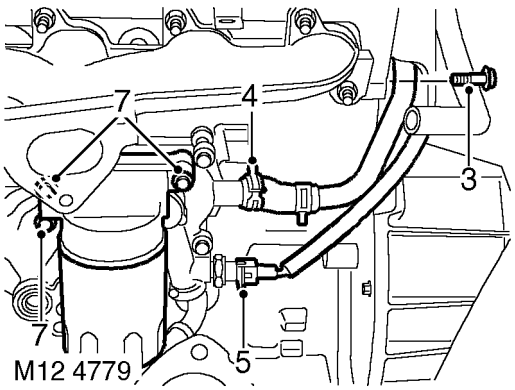

3. Remove clutch housing bolt and release coolant pipe from rear of engine.
4. Release clip and coolant hose from oil cooler.
5. Disconnect oil pressure switch multiplug.
6. Remove oil filter element using a suitable strap wrench.
7. Remove 3 bolts, remove oil filter adaptor and discard gasket.

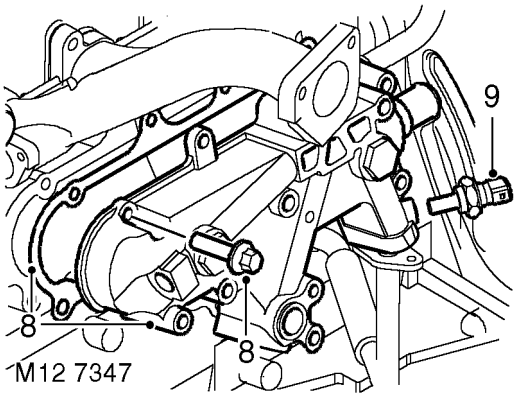

8. Remove 7 bolts, remove oil cooler and discard gasket.
9. Remove oil pressure switch.

Refit

10. Clean oil cooler and mating faces.
11. Fit oil pressure switch and tighten to ***9 Nm (7 lbf.ft)*** .
12. Position oil cooler using a new gasket and tighten bolts to ***25 Nm (18 lbf.ft)*** .
13. Position oil filter adaptor, fit new gasket and tighten bolts to ***25 Nm (18 lbf.ft).***
14. Position oil filter element hand tight then a further half turn.
15. Position coolant hose to oil cooler and secure clip.
16. Position coolant pipe and tighten clutch housing bolt to ***50 Nm (37 lbf.ft)*** .
17. Connect oil pressure switch multiplug.
18. Fit centrifuge assembly. ***See this Section.***
19. Refill cooling system. ***See COOLING SYSTEM, Adjustment.***
20. Top up engine oil.

CENTRIFUGE ASSEMBLY

Service repair no - 12.60.90

Remove

1. Remove fixings and remove underbelly panel. ***See CHASSIS AND BODY, Repair.***

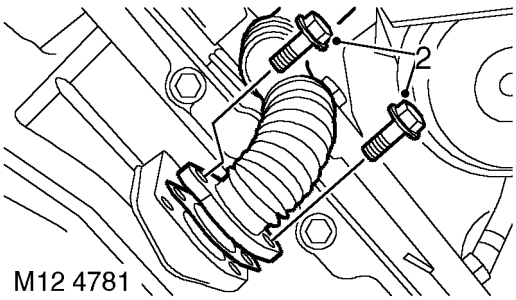

2. Remove 2 bolts securing centrifuge drain pipe to engine sump and discard gasket.
3. Remove turbocharger. ***See FUEL SYSTEM, Repair.***

Models with air conditioning only

4. Remove auxiliary drive belt. ***See ELECTRICAL, Repair.***

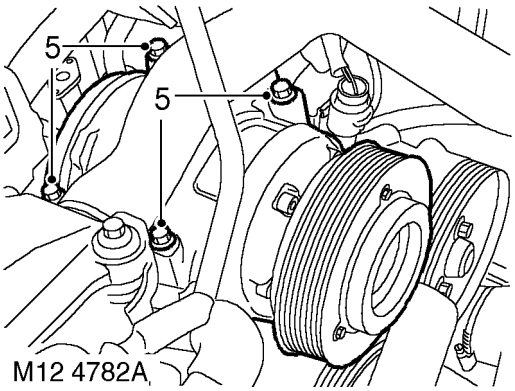

5. Remove 4 bolts securing compressor and move to one side.

All Models

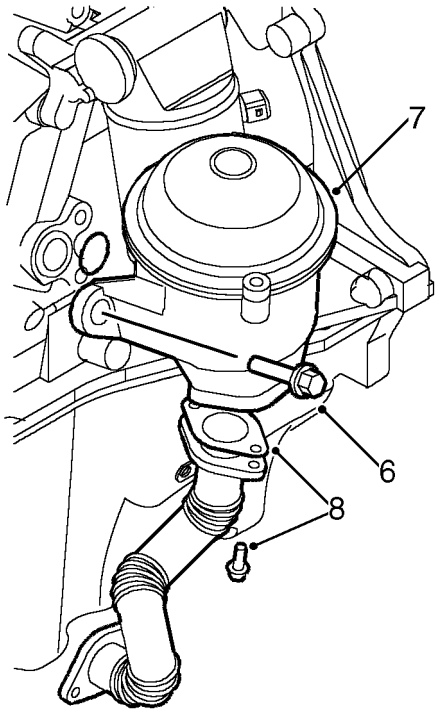

M12 4783

6. Remove 3 bolts securing centrifuge to engine oil cooler.
7. Remove centrifuge and discard 'O' ring.
8. Remove 2 bolts, remove drain pipe from centrifuge and discard gasket.

Refit

9. Clean mating faces of centrifuge, oil cooler and sump.
10. Position drain pipe to centrifuge using new gasket and tighten bolts to ***10 Nm (7 lbf.ft)*** .
11. Position new 'O' ring to oil cooler.
12. Position centrifuge and tighten bolts to ***25 Nm (18 lbf.ft)*** .
13. Align drain pipe to sump, fit new gasket and tighten bolts to ***10 Nm (7 lbf.ft)***

Models with air conditioning only

14. Position compressor and tighten bolts to ***25 Nm (18 lbf.ft)*** .
15. Fit auxiliary drive belt. ***See ELECTRICAL, Repair.***

All Models

16. Fit turbocharger. ***See FUEL SYSTEM, Repair.***
17. Fit underbelly panel. ***See CHASSIS AND BODY, Repair.***

ROTOR - CENTRIFUGE

Service repair no - 12.60.91

Remove

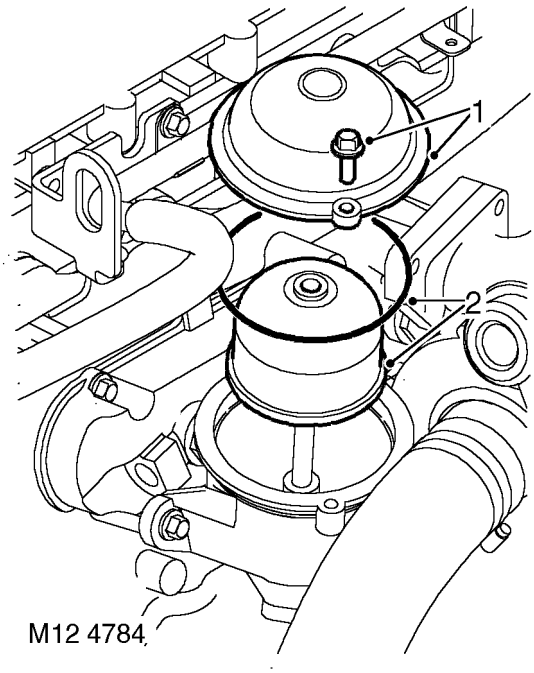

1. Remove 2 bolts and remove centrifuge cover.
2. Remove and discard 'O' ring and rotor

Refit

3. Clean centrifuge body and cover.
4. Fit new rotor.
5. Fit centrifuge cover using new 'O' ring and tighten bolts to ***9 Nm (7 lbf.ft)*** .

OIL SEAL - TIMING COVER

Service repair no - 12.65.05

Remove

1. Remove crankshaft pulley. ***See this Section.***

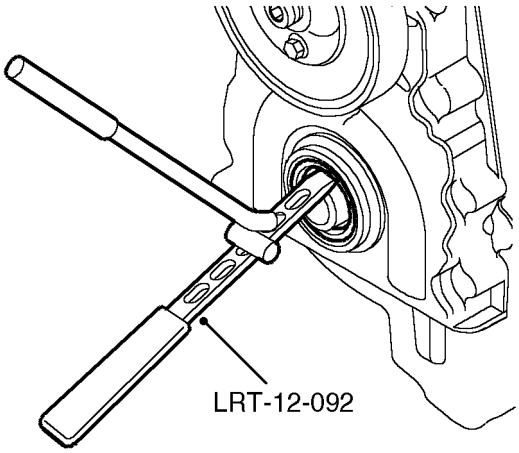

M12 4808

2. Position **LRT-12-092** into crankshaft front oil seal and discard seal.

Refit

3. Using a lint free cloth, thoroughly clean oil seal recess and the running surface on crankshaft pulley.

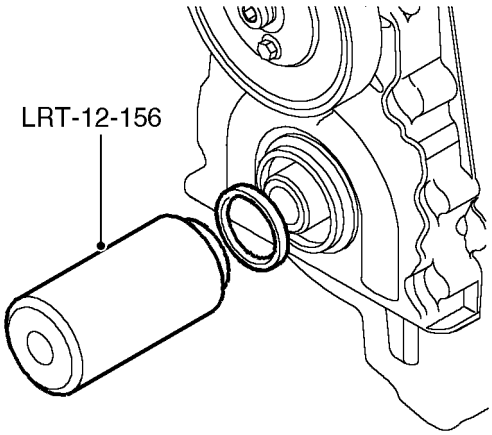

M12 4809A

4. Position new seal into timing chain housing. Drift seal into place using **LRT-12-156** .
5. Remove **LRT-12-156** .
6. Fit crankshaft pulley. ***See this Section.***

TIMING CHAIN AND SPROCKETS

Service repair no - 12.65.13

Remove

1. Remove crankshaft front oil seal. ***See this Section.***
2. Remove cylinder head gasket. ***See this Section.***
3. Remove sump gasket. ***See this Section.***

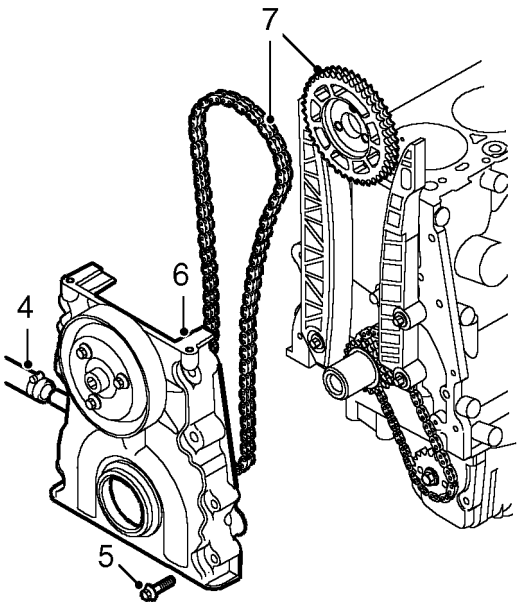

M12 4805

4. Release clip securing vacuum pump drain hose to timing chain cover.
5. Remove 8 bolts securing timing chain cover.
6. Remove cover.
7. Remove timing chain and camshaft sprocket.

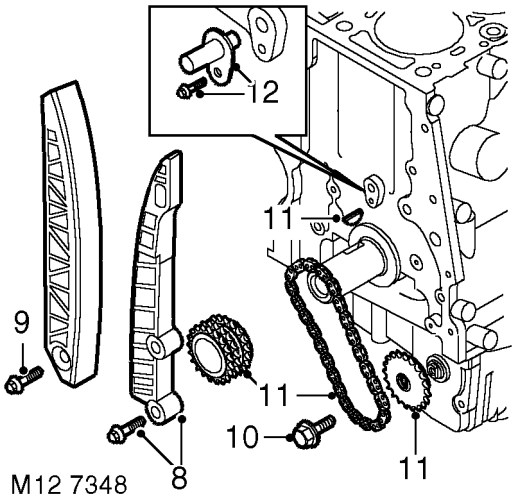

M12 7348

8. Remove 2 bolts and remove timing chain fixed guide.
9. Remove bolt and remove timing chain adjustable guide.
10. Remove bolt securing oil pump drive sprocket.
11. Remove crankshaft sprocket, oil pump drive chain and sprocket.
12. Remove bolt and remove timing chain lubrication jet.

Refit

13. Clean timing chain lubrication jet.
14. Fit lubrication jet and tighten bolt to ***10 Nm (7 lbf.ft)*** .
15. Clean oil pump drive sprocket bolt threads.
16. Clean timing sprockets and chain guides.
17. Ensure that crankshaft is set to TDC firing No. 1 cylinder.
18. Fit oil pump drive chain to crankshaft sprocket and fit sprocket to crankshaft.
19. Fit sprocket to oil pump.
20. Apply Loctite 242 to oil pump sprocket bolt threads and tighten bolt to ***25 Nm (18 lbf.ft)*** .
21. Fit timing chain fixed guide and tighten M10 bolt to ***45 Nm (34 lbf.ft)*** and M6 bolt to ***10 Nm (7 lbf.ft)*** .
22. Fit timing chain adjustable guide and tighten bolt to ***25 Nm (18 lbf.ft).***

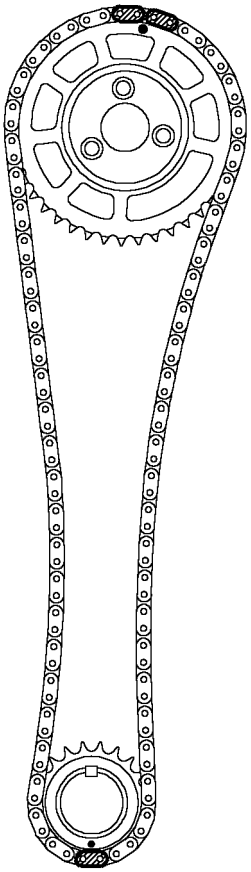

M12 4807

23. Fit camshaft sprocket to timing chain with timing mark between the 2 bluelinks.
24. Fit timing chain to crankshaft sprocket aligning blue link to timing mark.
25. Clean timing cover and mating face.
26. Apply an even film of sealant, Part No. STC 4600 to timing cover and spread to an even film using a roller.

CAUTION: Assembly and bolt tightening must be completed within 20 minutes of applying sealant.

27. With assistance, fit timing cover, connect vacuum pump drain hose and working progressively, tighten bolts to ***27 Nm (20 lbf.ft)*** .
28. Secure vacuum hose clip.
29. Fit cylinder head gasket. ***See this Section.***
30. Fit sump gasket. ***See this Section.***
31. Fit crankshaft front oil seal. ***See this Section.***

GASKET - INLET MANIFOLD

Service repair no - 30.15.08.01

Remove

NOTE: The following procedure covers both EU3 and non EU3 engines

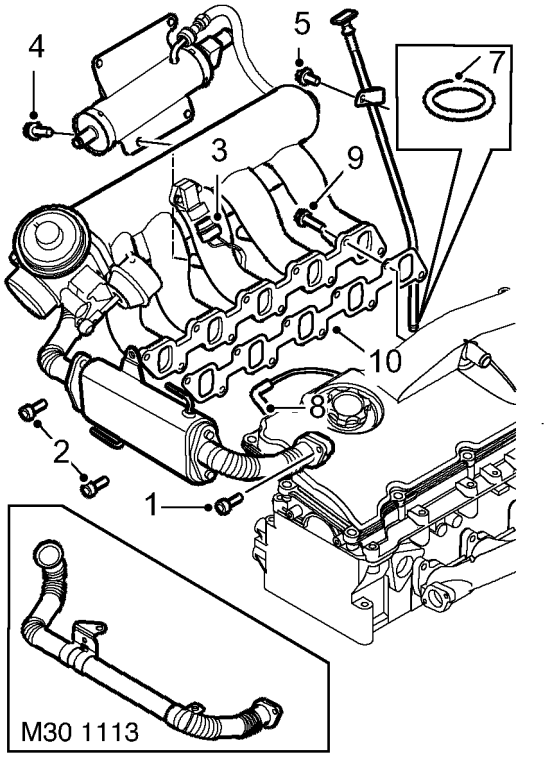

NOTE: EU3 Engine in main illustration, Pre EU3 condition shown in inset.

1. Remove and discard 2 Allen screws securing EGR pipe or EGR cooler to exhaust manifold.
2. Remove bolt securing EGR pipe to cylinder head, (if fitted)
3. Disconnect multiplug from IAT and MAP sensor.
4. Remove 4 bolts securing fuel cooler to inlet manifold. and remove cooler.
5. Remove bolt securing engine dipstick tube to camshaft carrier.
6. Release and remove engine dipstick tube.
7. Remove 'O' ring from dip stick tube.
8. Disconnect 4 leads from glow plugs.
9. Remove 2 nuts and 8 bolts and remove inlet manifold.
10. Remove manifold gasket.

Refit

1. Clean inlet manifold and mating face, clean mating faces of EGR pipe, exhaust manifold and EGR cooler (if fitted).
2. Fit new gasket.
3. Position inlet manifold and working from the centre outwards, fit inlet manifold nuts and bolts and tighten to ***25 Nm (18 lbf.ft).***
4. Connect glow plug leads.
5. Clean engine dipstick tube.
6. Fit new 'O' ring to dipstick tube.
7. Fit engine dipstick tube to camshaft carrier and tighten bolt to ***10 Nm (7 lbf.ft)*** .
8. Position fuel cooler and tighten bolts to ***25 Nm (18 lbf.ft)*** .
9. Connect multiplug to IAT and MAP sensor.
10. Position EGR pipe or EGR cooler to exhaust manifold and using new Allen screws tighten to ***10 Nm (7 lbf.ft)*** .
11. Fit EGR pipe clamp to cylinder head, (if fitted) and tighten bolt to ***10 Nm (7 lbf.ft)*** .

GASKET - EXHAUST MANIFOLD

Service repair no - 30.15.12.01

Remove

NOTE: The following procedure covers both EU3 and non EU3 engines

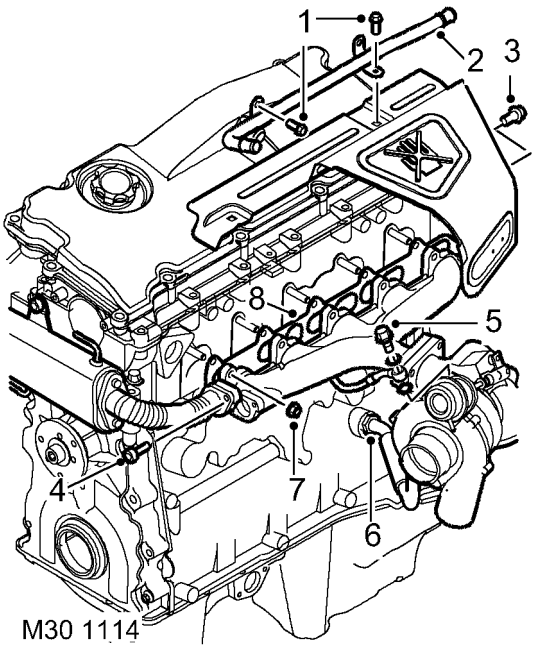

NOTE: EU3 engine illustrated.

1. Remove 3 bolts securing heater pipe to cylinder head and turbocharger heat shield.
2. Remove heater pipe.
3. Remove bolt and remove turbocharger heat shield.
4. Remove and discard 2 Allen screws securing EGR pipe to exhaust manifold.
5. Remove banjo bolt securing oil feed pipe to turbocharger and discard sealing washers.
6. Loosen turbocharger drain hose union at cylinder block.
7. Remove 10 nuts and remove exhaust manifold and turbocharger.
8. Remove manifold gasket.

Refit

1. Clean exhaust manifold mating faces.
2. Position exhaust manifold to cylinder head using new gasket and fit manifold nuts.
3. Working from the centre outwards, fit and tighten nuts to ***25 Nm (18 lbf.ft)*** .
4. Clean turbocharger drain and feed hose unions.
5. Fit turbocharger oil drain hose to cylinder block and tighten union to ***48 Nm (35 lbf.ft)*** .
6. Fit new sealing washers to turbocharger oil feed pipe, fit banjo bolt and tighten to ***25 Nm (18 lbf.ft)*** .
7. Position EGR pipe to exhaust manifold. Fit new Allen screws and tighten to ***10 Nm (7 lbf.ft)*** .
8. Position turbocharger heat shield.
9. Position heater pipe to cylinder head and tighten bolts to ***25 Nm (18 lbf.ft)*** .
10. Position exhaust manifold heatshield and tighten M6 bolts to ***9 Nm (7 lbf.ft)*** and M8 bolt to ***25 Nm (18 lbf.ft).***

GASKET - CYLINDER HEAD

Service repair no - 12.29.02.01

Remove

CAUTION: The following procedures should only be carried out when cylinder head is to be overhauled; for replacement of cylinder head gasket only, see Repairs section - Gasket - Cylinder head.

NOTE: The following procedure covers both EU3 and non EU3 engines

1. Remove exhaust manifold gasket. ***See MANIFOLD AND EXHAUST SYSTEM, Repair.***
2. Remove inlet manifold gasket. ***See MANIFOLD AND EXHAUST SYSTEM, Repair.***

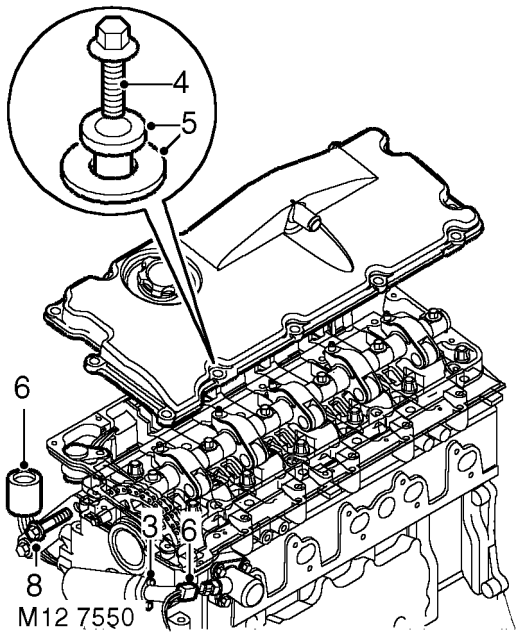

3. **Models with EGR cooler:** Remove and discard 2 Allen screws securing EGR pipe to cooler.
4. Progressively loosen then remove 13 bolts securing camshaft cover, remove cover; remove and discard gasket.
5. Remove isolators and sealing washers from cover.
6. Disconnect injector multiplug from camshaft carrier.
7. Disconnect multiplug from ECT sensor.
8. Remove bolt securing alternator strap bracket to cylinder head.

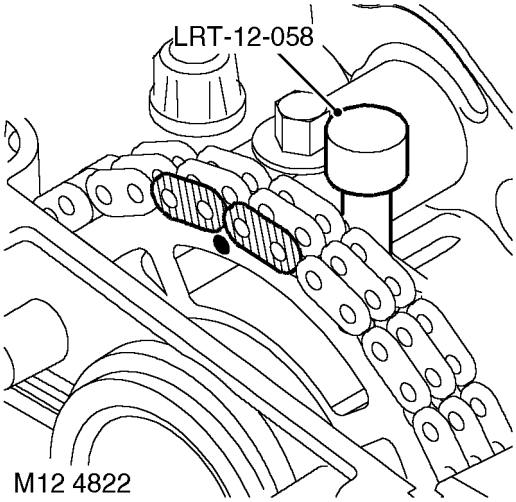

9. Set engine to TDC firing - No. 1 cylinder - coloured links on timing chain are aligned with timing mark on camshaft sprocket.
10. Fit timing pin **LRT-12-058** into slot in camshaft.

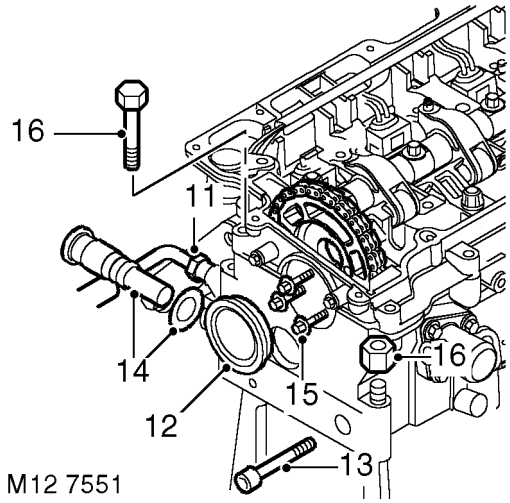

M12 7551

11. Disconnect alternator/vacuum pump oil feed pipe union from cylinder head, remove and discard 'O' ring.
12. Remove camshaft sprocket access plug from front of cylinder head, remove and discard 'O' ring.
13. Remove timing chain fixed guide Allen screw.
14. Remove timing chain tensioner, remove and discard sealing washer.
15. Remove and discard 3 bolts securing camshaft sprocket to camshaft; release sprocket from camshaft.
16. Remove bolt and nut securing front of cylinder head to timing chain cover.

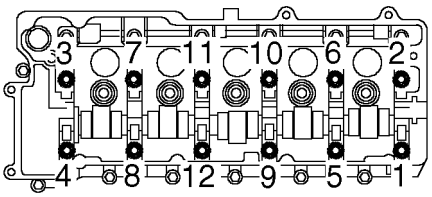

M12 7343

17. Using sequence shown, progressively loosen then remove 12 cylinder head bolts; discard bolts together with their captive washers.
18. Using assistance, remove cylinder head and place on 2 wooden blocks.

CAUTION: Cylinder head is dowel located, do not tap it sideways to free it from cylinder block. Support both ends of cylinder head on blocks of wood. With the camshaft carrier bolted down, the injector nozzles and some of the valves will protrude from the face of the cylinder head.

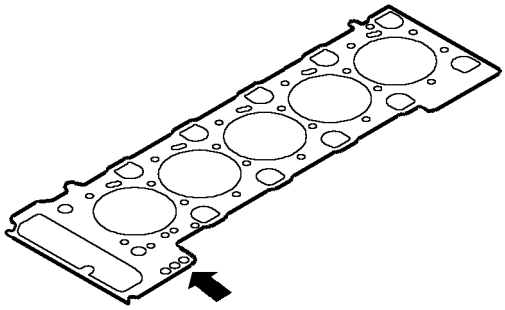
M12 7548

19. Remove the cylinder head gasket.
20. Note the gasket thickness indicator and ensure the same thickness gasket is used on refitment of the cylinder head.

CAUTION: If new pistons, connecting rods or crankshaft are fitted, it will be necessary to measure piston stand proud in order to determine thickness of gasket required. ***See this Section.***

21. Remove and discard 2 plastic locating dowels from cylinder block.
22. Carry out cylinder head overhaul procedures. ***See this Section.***

Refit

1. Thoroughly clean cylinder block and cylinder head mating faces.
2. Ensure coolant and oil passageways are clear and bolt holes are clean and dry.
3. Ensure locating dowel holes in cylinder block are clean and dry.
4. Fit new plastic locating dowels in cylinder block.
5. Fit new cylinder head gasket of the correct thickness with the word 'TOP' uppermost.

CAUTION: Gasket must be fitted dry.

6. Ensure that camshaft timing pin **LRT-12-158** is still in position and using assistance, fit cylinder head.
7. Carefully enter new cylinder head bolts together with their captive washers, **DO NOT DROP**. Lightly tighten bolts.

CAUTION: Cylinder head bolts are pre-lubricated and do not require additional lubrication.

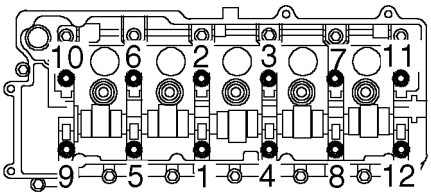

M12 4384

8. Using sequence shown, tighten cylinder head bolts to:
   Stage 1 - ***30 Nm (23 lbf.ft)***
   Stage 2 - ***65 Nm (48 lbf.ft)***
   Stage 3 - ***90°***
   Stage 4 - ***Further 180°***
   Stage 5 - ***Further 45°***

CAUTION: Ensure correct tightening sequence is followed for all 5 tightening stages. Do not tighten bolts 315°in one operation.

9. Fit cylinder head to timing chain cover nut and bolt and tighten to ***25 Nm (18 lbf.ft)*** .
10. Clean camshaft sprocket and mating face on camshaft.
11. Ensure engine is set to TDC firing - No.1 cylinder.

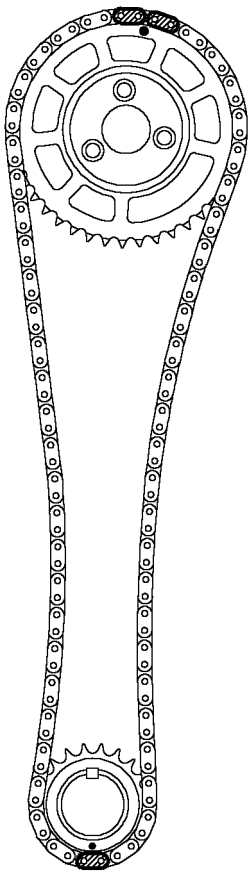

M12 4807

12. Check that mark on camshaft sprocket is positioned between the 2 coloured links on timing chain.
13. Position sprocket to camshaft, fit and lightly tighten 3 new bolts then loosen bolts half a turn.

14. Clean fixed guide Allen screw and apply Loctite 242 to screw threads.
15. Fit fixed timing chain guide Allen screw and tighten to ***25 Nm (18 lbf.ft)*** .
16. Clean timing chain tensioner and fit new sealing washer.
17. Fit timing chain tensioner and tighten to ***45 Nm (33 lbf.ft)*** .
18. Tighten camshaft sprocket bolts to ***36 Nm (27 lbf.ft)*** .
19. Remove tool **LRT-12-058** from camshaft.
20. Lubricate a new 'O' ring with engine oil and fit to camshaft sprocket access plug.
21. Fit camshaft sprocket access plug.
22. Clean alternator/vacuum pump oil feed hose union.
23. Lubricate a new 'O' ring with engine oil and fit to alternator/vacuum pump hose union.
24. Fit and tighten alternator/vacuum pump oil hose union to ***10 Nm (7 lbf.ft)*** .
25. Fit bolt securing alternator strap bracket to cylinder head and tighten to ***25 Nm (18 lbf.ft)*** .
26. Connect multiplugs to ECT sensor and EUIs.

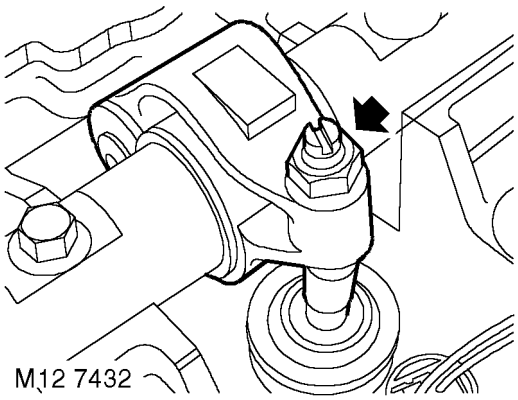

CAUTION: Following cylinder head overhaul, it will be necessary, before fitting the camshaft cover, to adjust the fuel injector rockers using the following procedures:

27. Rotate engine clockwise until No. 1 EUI lobe is at full lift.
28. Tighten No.1 rocker adjusting screw until the EUI plunger is felt to 'bottom out'.
29. Loosen rocker adjusting screw 1 complete turn to give EUI plunger the required bump clearance and tighten rocker adjusting screw locknut to ***16 Nm (12 lbf.ft)*** .

CAUTION: Ensure screw does not turn as locknut is tightened.

30. Carry out above procedures for the remaining 4 rocker arms.
31. After completion of rocker adjustment, slowly rotate engine clockwise 2 complete turns by hand to ensure that no EUI's are bottoming out on their plungers.
32. Clean camshaft cover and mating face.
33. Fit new sealing washers and isolators as necessary to camshaft cover.
34. Fit new camshaft cover gasket to cover.

CAUTION: Gasket must be fitted dry.

35. Fit camshaft cover to camshaft carrier, fit bolts and working from the centre outwards, tighten bolts to ***10 Nm (7 lbf.ft)*** .
36. Fit inlet manifold gasket. ***See MANIFOLD AND EXHAUST SYSTEM, Repair.***
37. Fit exhaust manifold gasket. ***See MANIFOLD AND EXHAUST SYSTEM, Repair.***
38. **EGR cooler fitted:-** Position EGR pipe to cooler, fit new Allen screws and tighten to ***10 Nm (7 lbf.ft).***

CYLINDER HEAD GASKET SELECTION

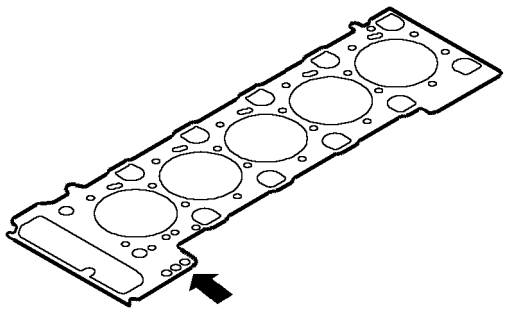

M12 7548

NOTE: There are three thicknesses of cylinder head gasket available and in order that the correct gasket is fitted, it will be necessary to determine the stand proud (protrusion) of each piston above the top face of the cylinder block. Gaskets have either 1, 2 or 3 identification holes and the following procedures must be followed in order that the correct gasket is selected.

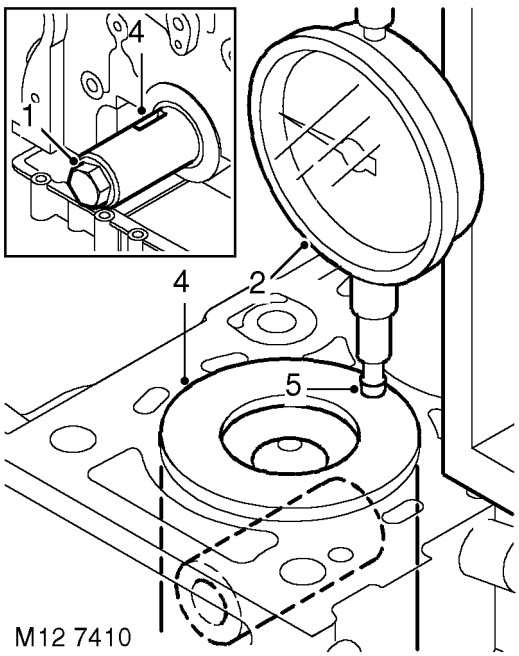

M12 7410

1. Temporarily fit and lightly tighten a new crankshaft pulley bolt.
2. Assemble a magnetic base DTI to cylinder block top face adjacent to No. 1 cylinder bore.
3. Position stylus to cylinder block top face and zero gauge.
4. Using crankshaft pulley bolt, rotate crankshaft in a clockwise direction until No.1 piston is at TDC - Woodruff key slot in crankshaft is at 12 o'clock.
5. Position stylus of DTI at edge of piston and directly over gudgeon pin axis.
6. Measure and record No.1 piston protrusion.

CAUTION: Measurement must be taken at front and rear of piston.

7. Establish average of the 2 readings taken.
8. Repeat above procedures for remaining pistons.
9. From readings obtained, determine HIGHEST piston protrusion figure and select the appropriate cylinder head gasket:
   Piston protrusion = 0.351 to 0.50 mm (0.014 to 0.02 in) - Select the 2 hole gasket.
   Piston protrusion = 0.501 to 0.57 mm (0.021 to 0.022 in) - Select the 1 hole gasket.
   Piston protrusion = 0.571 to 0.65 mm (0.022 to 0.025 in) - Select the 3 hole gasket.
10. Remove DTI.
11. Fit cylinder head gasket. ***See this Section.***

CYLINDER HEAD - OVERHAUL

Service repair no - 12.29.19.01

Dismantling

1. Remove cylinder head gasket. ***See this Section.***

CAUTION: Due to the design of the cylinder head which incorporates drillings for the fuel injection system, it is important that absolute cleanliness is adhered to when carrying out overhaul procedures.

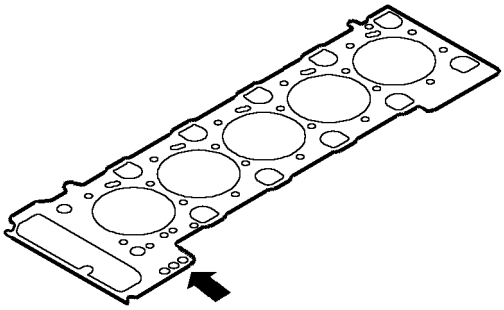

M12 7548

2. Note the gasket thickness indicator and ensure the same thickness gasket is used on refitment of cylinder head.

CAUTION: If new pistons, connecting rods or crankshaft are fitted, it will be necessary to determine thickness of gasket required. ***See this Section.***

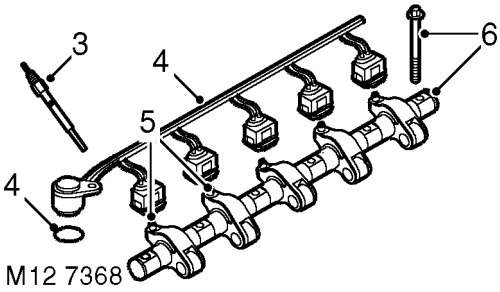

M12 7368

3. Remove 4 glow plugs.
4. Disconnect multiplugs from EUI's and remove harness from camshaft carrier. Remove and discard 'O' ring from harness multiplug.
5. Loosen lock nuts and fully unscrew rocker adjusting screws; discard locknuts and screws.
6. Remove and discard 6 bolts securing rocker shaft, remove shaft.

NOTE: Dowel located.

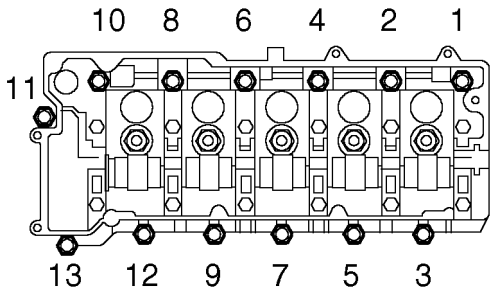

M12 7334

7. Using sequence shown, progressively loosen 13 bolts securing camshaft carrier to cylinder head until valve spring pressure is released; remove bolts.

CAUTION: Do not discard bolts at this stage.

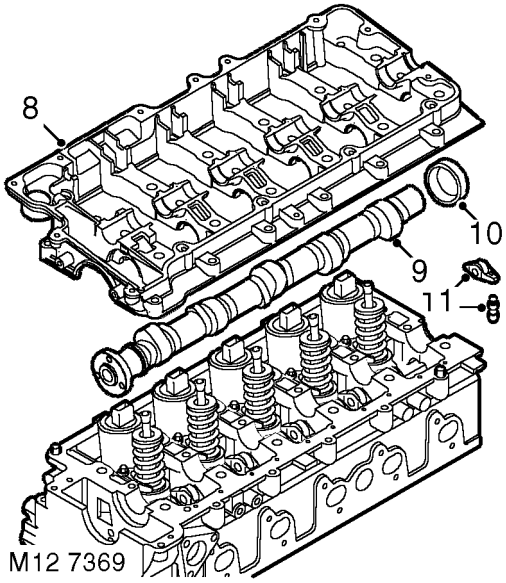

8. Gently tap camshaft carrier upwards to break sealant bond, remove carrier.

NOTE: Dowel located.

9. Remove camshaft.
10. Remove and discard camshaft rear oil seal.
11. Remove finger followers and lash adjusters.

CAUTION: Store lash adjusters and finger followers in their fitted order and store lash adjusters upright. Maintain absolute cleanliness when handling components.

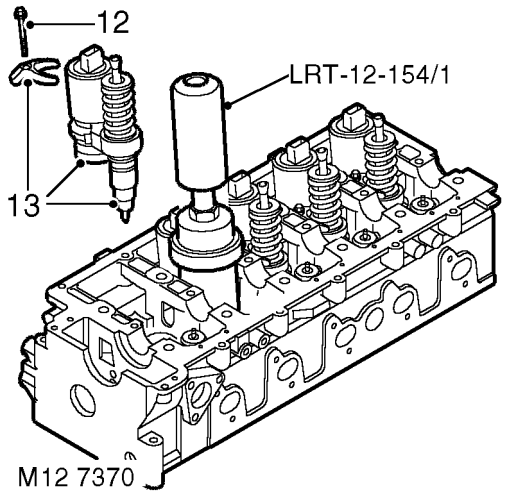

12. Remove and discard 5 bolts securing EUI retainers.
13. Using tool **LRT-12-154/1** remove EUI units from cylinder head and collect retainers. Remove reaction posts and keep in their fitted order.

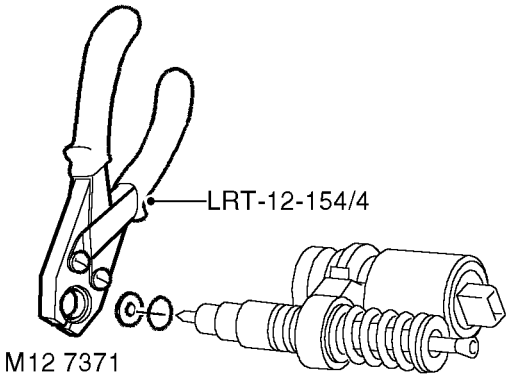

14. Using tool **LRT-12-154/4**, remove and discard sealing washer and 'O' ring from each EUI unit.
15. Support cylinder head clear of valves, use a hollow drift and tap each valve spring cap to free collets.

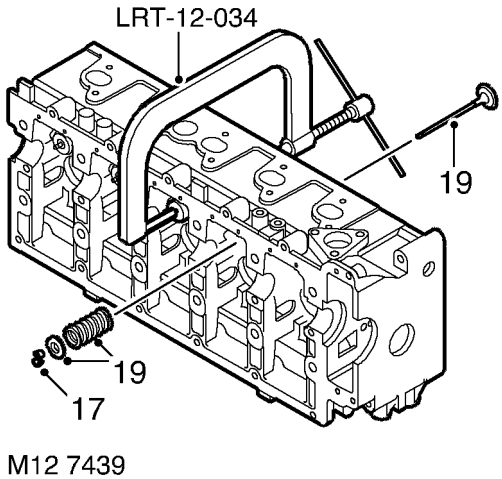

16. Using tool **LRT-12-034**, compress valve spring.
17. Remove 2 collets from valve stem using a stick magnet.
18. Remove tool **LRT-12-034**.
19. Remove valve spring cap, valve spring and valve.

CAUTION: Keep components in their fitted order.

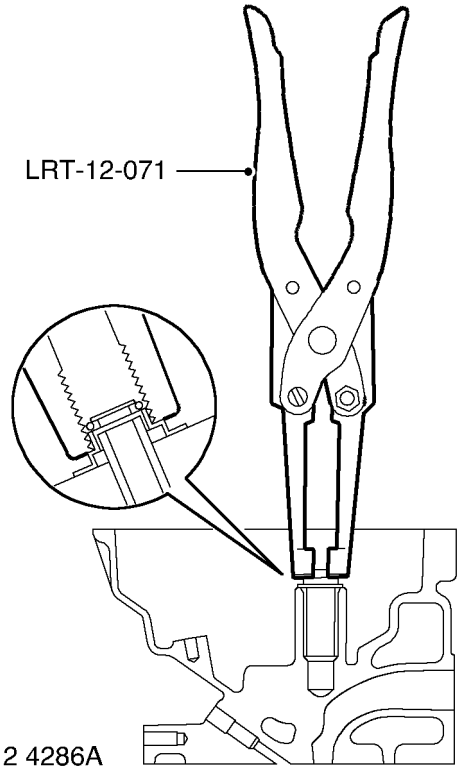

20. Using tool **LRT-12-071**, remove and discard valve stem oil seal.

21. Repeat above operations to remove remaining valves.

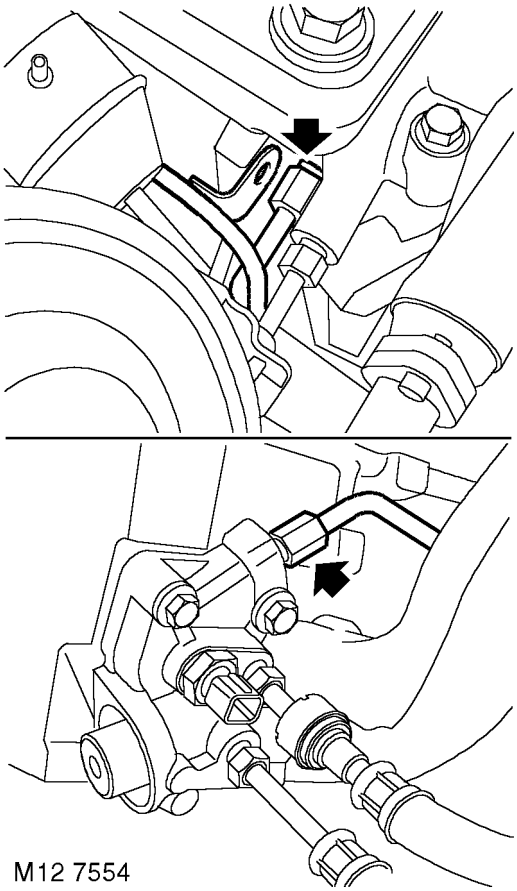

22. Engine Serial No. Prefixes 15P to 19P:-
Disconnect spill return pipe from cylinder head and fuel connector block, remove and discard 'O' rings.

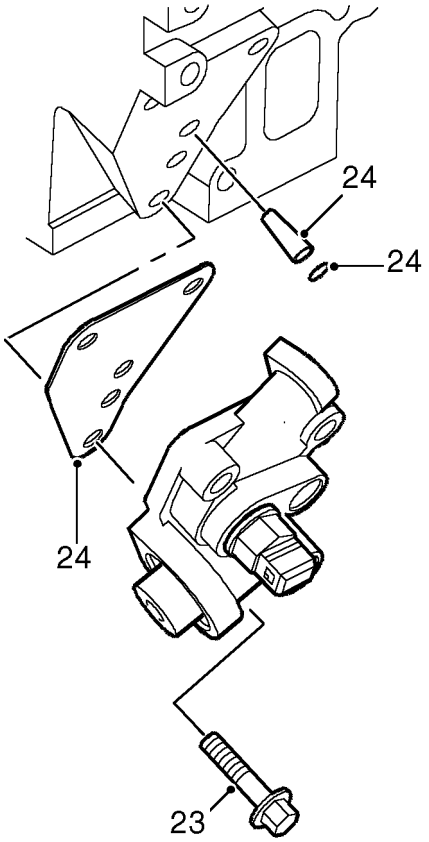

M12 7555

23. Remove 3 bolts and remove fuel connector block from cylinder head.
24. Remove and discard gasket, 'O' ring and fuel filter.
25. Remove spacer block and gasket (if fitted).

Cylinder head and camshaft carrier - cleaning

1. Thoroughly clean cylinder head mating faces, ensure oil and coolant passages are clear and bolt holes are clean and dry.

CAUTION: Take care to ensure that EUI drillings are clear.

2. Using suitable solvent, remove all traces of sealant and gasket material.

CAUTION: Do not use metal scrapers.

3. Remove all traces of oil from camshaft bearings and journals.
4. Clean glow plug threads.

Cylinder head - Inspection

1. Check core plugs for signs of leakage and corrosion, seal replacement plugs with Loctite 243.

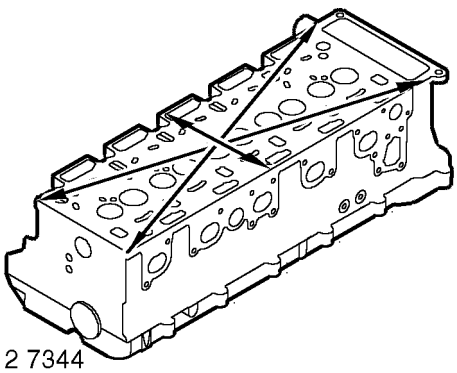

M12 7344

2. Check cylinder head for warping across centre and from corner to corner.
   Maximum cylinder head warp = 0.1 mm (0.004 in).

CAUTION: Cylinder heads may not be refaced, replace the head assembly if warping exceeds the limit given.

Lash adjusters and finger followers - Inspection

1. Check lash adjuster bores for scoring and signs of wear or damage.
2. Check lash adjusters for signs of wear, scoring and overheating, replace as necessary. Ensure oil hole in each lash adjuster is clear.

CAUTION: Store lash adjusters upright and in their fitted order.

3. Check finger followers for wear and that rollers are free to rotate.

CAUTION: Store finger followers in their fitted order.

Camshaft - Inspection

1. Check camshaft lobes and bearing journals for signs of scoring and wear.
2. Check bearing surfaces in cylinder head and camshaft carrier for signs of scoring and wear.

CAUTION: Cylinder head and camshaft carrier are machined together as an assembly, if bearing surfaces in either component are damaged, both components must be replaced as an assembly.

Camshaft - Check end-float

1. Position camshaft in camshaft carrier.

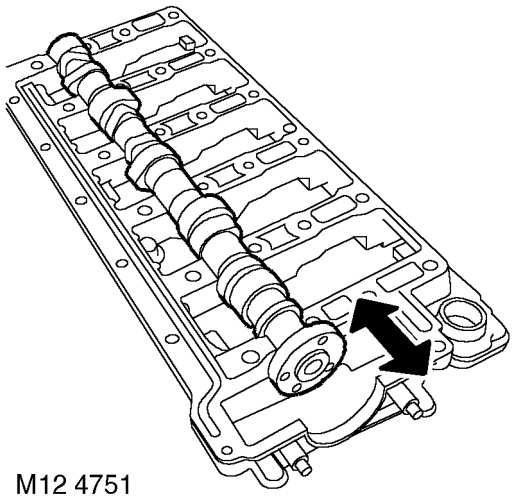

M12 4751

2. Check end-float of camshaft using a DTI. **Camshaft end-float =** 0.06 to 0.16 mm (0.002 to 0.006 in).

3. Renew components as necessary to achieve correct end-float.

Camshaft bearings - check clearance

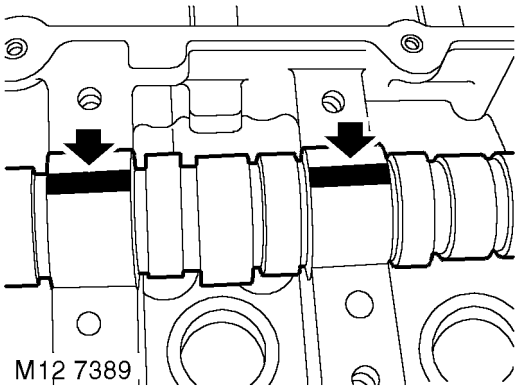

1. Position camshaft in cylinder head.
2. Place a piece of Plastigage along the centre line of each camshaft bearing journal.
3. Carefully fit the camshaft carrier ensuring it is located on dowels.

CAUTION: Do not rotate camshaft.

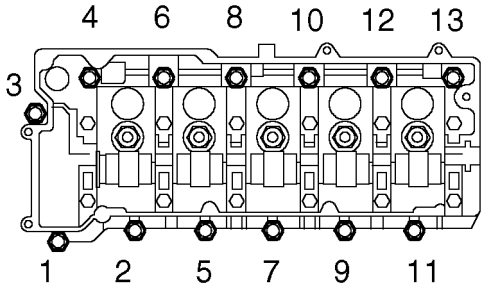

M12 7337

4. Fit original camshaft carrier retaining bolts and tighten in sequence shown to ***25 Nm (18 lbf.ft)*** .

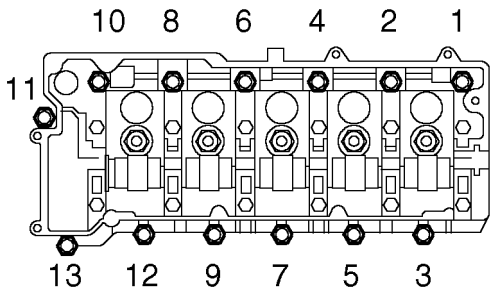

M12 7334

5. Using sequence shown, loosen then remove camshaft carrier retaining bolts.

CAUTION: Do not discard bolts at this stage.

6. Carefully remove camshaft carrier.

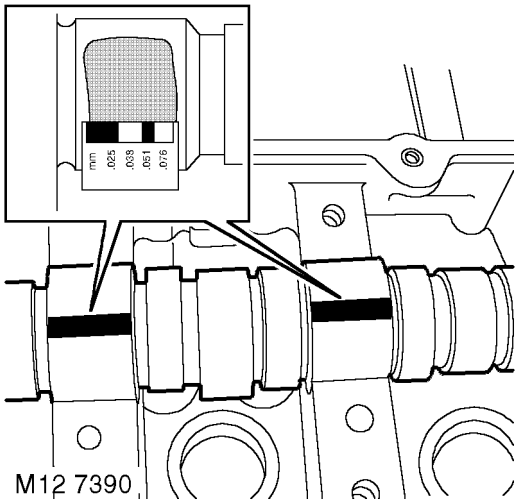

7. Measure and record widest portion of Plastigage on each camshaft bearing journal.
8. Compare figures obtained with camshaft bearing clearance.
   Camshaft bearing clearance = 0.04 to 0.10 mm (0.002 to 0.004 in).

9. If any bearing clearance is found to exceed figures given, repeat the above procedure using a new camshaft.

CAUTION: If, after repeating the bearing clearance check with a new camshaft the bearing clearances are still excessive, a new cylinder head and camshaft carrier assembly must be fitted.

10. Remove all traces of Plastigage using an oily cloth, do not use a scraper.
11. Discard camshaft carrier bolts.

Valve springs - Inspection

1. Check free length of valve springs:
   Free length =47.0 ± 0.25 mm (1.85 ± 0.011 in)

CAUTION: Valve springs must be replaced as a set, if springs are to be refitted, keep them in their fitted order.

Valves and valve guides - Inspection

1. Clean carbon from valves, check valves for burning, pitting or cracking; replace as necessary.
2. Clean carbon from valve seat inserts, remove all loose particles on completion.
3. Check valve seat inserts for pitting and burning.

CAUTION: It is not permissible to recut or replace valve seat inserts.

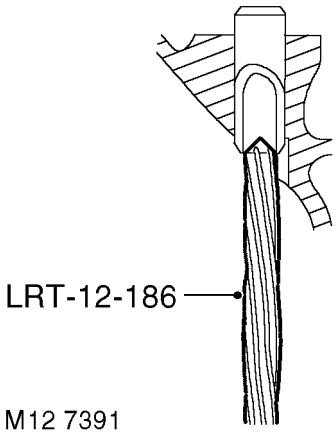

4. Remove carbon deposits from valve guides using tool **LRT-12-186**.

CAUTION: Tool must be inserted from combustion chamber face side of cylinder head, ensure all loose particles of carbon are removed on completion.

5. Check and record diameter of each valve stem.
   Valve stem diameter:
   Inlet = 6.907 to 6.923 mm (0.2719 to 0.2725 in)
   Exhaust = 6.897 to 6.913 mm (0.2715 to 0.2721 in)

6. Renew any valve if stem diameter is less than specified.
7. Check and record valve stem to guide clearance using the following procedures:
8. Insert each valve into its respective guide.
9. Extend valve head 10 mm (0.375 in) out of valve seat and position a DTI gauge to rear of valve head.
10. Move valve towards front of cylinder head and zero DTI gauge ensuring that stylus of gauge remains in contact with valve head.
11. Move valve towards rear of cylinder head, record gauge reading to give valve stem to guide clearance.
    Valve stem to guide clearance:
    Inlet valve = 0.025 to 0.059 mm (0.0009 to 0.0023 in)
    Exhaust valve = 0.035 to 0.069 mm (0.0013 to 0.0027 in)

CAUTION: If stem to guide clearance exceeds figures given and valve stem diameters were as specified, cylinder head assembly must be replaced; it is not possible to replace valve guides.

12. Repeat above procedures for remaining valves.

CAUTION: Keep valves in their fitted order.

13. Check face angle of each valve, renew any valve with incorrect face angles, do not attempt to recut.
    Valve face angle:
    Inlet = 29°48’ ± 12’
    Exhaust = 44°48’ ± 12’

Valves - Lapping-in

1. Lap each valve to its seat using grinding paste.
2. Apply Prussian Blue to valve seat, insert valve into guide and press it firmly, without rotating on to seat.
3. Remove valve and check that a continuous, even line of Prussian Blue has been transferred on to valve face.

NOTE: Line does not have to be across whole width of valve face.

4. Remove all traces of grinding paste on completion.
5. Check valve head stand-down. ***See this Section.***

Valve head stand down

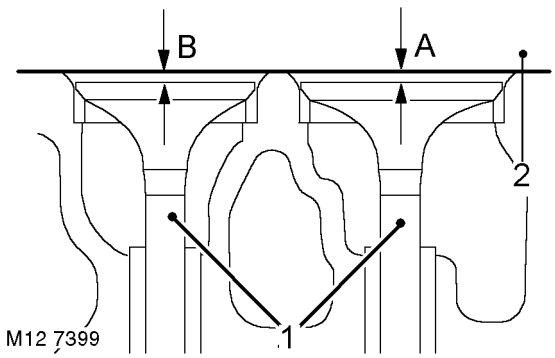

1. Insert each valve into its respective guide.
2. Using a straight edge and feeler gauges, check and record stand down of each valve head.
3. Compare figures obtained with figures given below.
   Valve head stand down:
   Inlet valve **A** = 0.555 to 0.825 mm (0.022 to 0.032 in)
   Exhaust valve **B** = 0.545 to 1.35 mm (0.021 to 0.053 in)

CAUTION: If any valve has a stand down greater than specified, repeat check using a new valve. If, after checking with a new valve, stand down is still excessive, cylinder head assembly must be replaced. It is not possible to replace valve seat inserts.

Rocker shaft - Dismantling

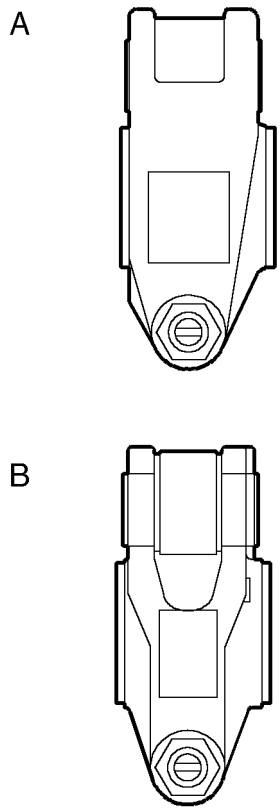

1. Suitably identify each rocker arm to its fitted position.

CAUTION: Identify type of rocker arm fitted. Engine Serial No. Prefixes 10P to 14P - Type A rocker arms. Engine Serial No. Prefixes 15P to 19P - Type B rocker arms. Type B rocker arms and type B rocker shaft may be fitted to Engine Serial No. Prefixes 10P to 14P as an assembly.

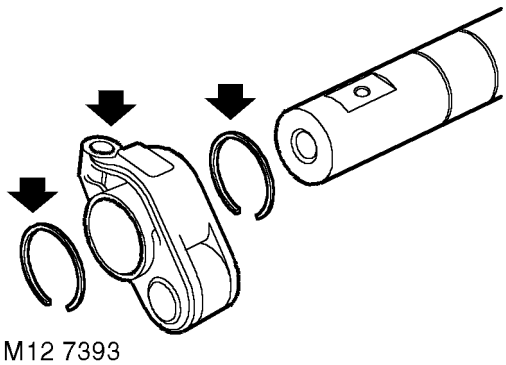

2. Remove and discard spring ring retaining rocker arm on shaft.
3. Remove rocker arm.
4. Remove and discard 2nd spring ring.

5. Repeat above procedures for remaining rocker arms.

CAUTION: Keep rocker arms in their fitted order.

Rocker arms and shaft - Inspection

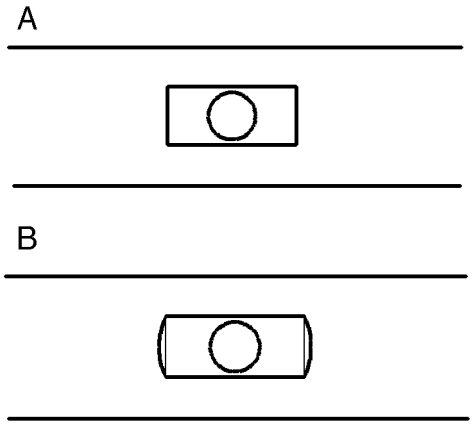

M12 7557

1. Clean rocker arms and shaft, ensure oilways are clear.

CAUTION: Identify type of rocker shaft fitted. Engine Serial No. Prefixes 10P to 14P - Type A rocker shaft. Engine Serial No. Prefixes 15P to 19P - Type B rocker shaft. Type B rocker arms and shaft may be fitted to Engine Serial No. Prefixes 10P to 14P as an assembly.

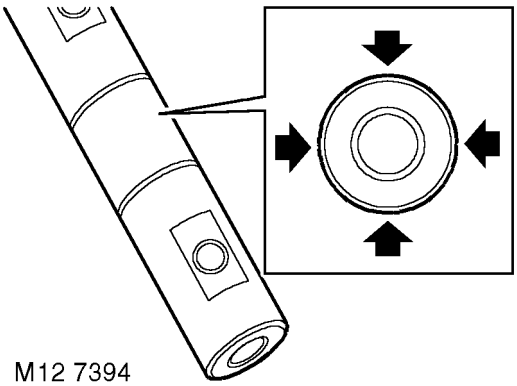

M12 7394

2. Check diameter of each rocker arm journal on shaft, take 2 measurements at 180°in centre of journal.
   Journal diameter = 26.971 to 26.998 mm (1.062 to 1.063 in)

CAUTION: Any ovality must be within limits given.

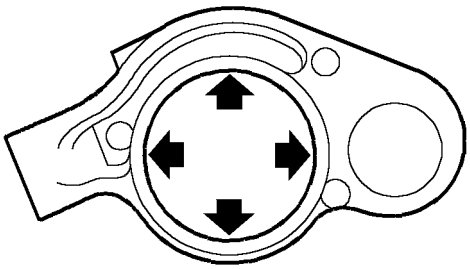

M12 7395

3. Using a vernier, check internal diameter of each rocker arm, take 2 measurements at 180°. **Rocker arm internal diameter =**27.0 to 27.013 mm (1.102 to 1.103 in)

CAUTION: Any ovality must be within limits given.

Rocker shaft - Assembling

1. Fit new spring ring to groove in rocker shaft.
2. Lubricate rocker shaft journals and rocker arms with engine oil.
3. Fit rocker arm to shaft ensuring that it is in its original fitted order.
4. Fit new spring ring to retain rocker arm.
5. Repeat above procedures for remaining rocker arms ensuring they are in their original fitted order.
6. Fit new rocker adjusting screws and locknuts to rocker arms; do not tighten screws fully into arms at this stage.

CAUTION: Ensure screws are correct for type of rocker arms fitted. Replacement screws for Engine Serial No. Prefixes 15P to 19P have a centre punch mark adjacent to the adjusting slot. These screws are not interchangeable with those fitted to Engine Serial No. Prefixes 10P to 14P.

Cylinder head - Assembling

1. Lubricate new valve stem oil seals with engine oil.

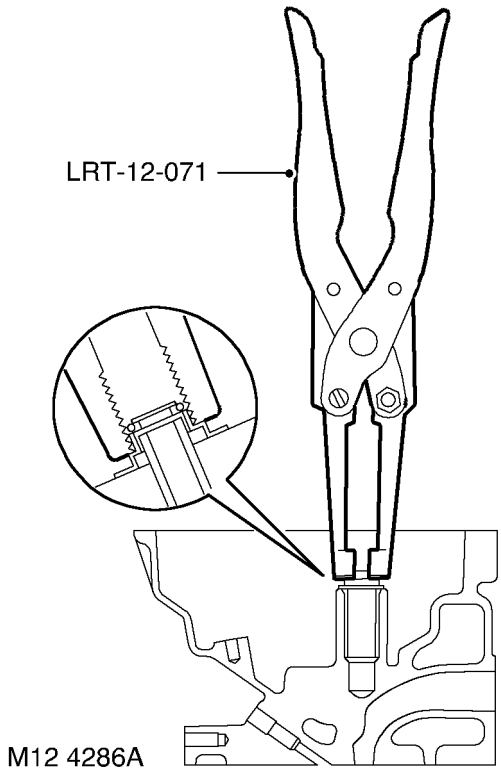

M12 4286A

2. Using tool **LRT-12-071**, fit valve stem oil seals.
3. Lubricate valve guides, valve stems, valve spring caps and springs with engine oil.

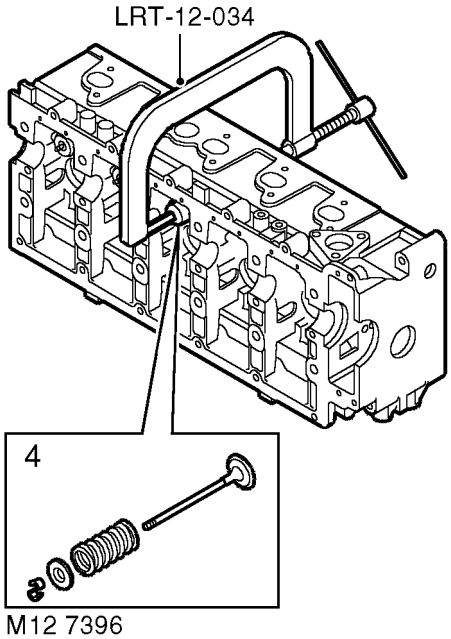

4. Assemble valves, springs and valve spring caps ensuring that they are in their original fitted order.
5. Compress valve springs using tool **LRT-12-034**, fit collets.
6. Using a wooden dowel and mallet, tap each spring cap lightly to seat collets.
7. Lubricate new injector 'O' rings with engine oil.

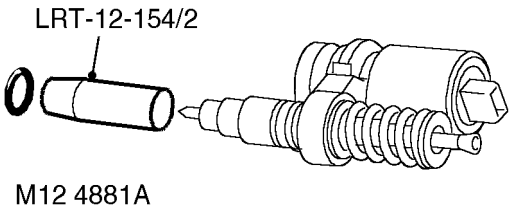

8. Using tool **LRT-12-154/2**, fit 'O' ring to each injector.

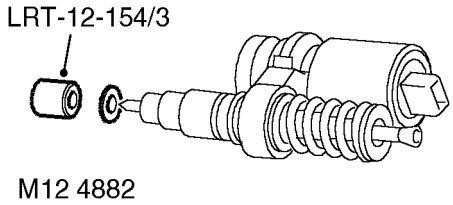

9. Using tool **LRT-12-154/3**, fit new sealing washer to each injector.
10. Support each end of cylinder head on blocks of wood.

CAUTION: Ensure blocks are clear of valves.

11. Position reaction posts in their original fitted order.
12. Carefully fit EUI's, ensuring they are in their original fitted order and that each retainer is located on its dowel.

CAUTION: If new EUI's are fitted, ensure replacements are correct. Engine Serial No. Prefixes 10P to 14 - Push rod bushes are coloured BLACK or BLUE. Engine Serial No. Prefixes 15P to 19P - Push rod bushes are coloured GREEN.

13. Fit new retainer bolts and tighten to ***32 Nm (24 lbf.ft)*** .

CAUTION: If new injectors are fitted they must be programmed for use with the ECM using Testbook.

14. Lubricate lash adjusters and bores with engine oil.
15. Fit lash adjusters ensuring they are in their original fitted order.

16. Lubricate finger followers with engine oil.
17. Fit finger followers ensuring they are in their original fitted order.
18. Lubricate cams and bearing journals on camshaft, cylinder head and camshaft carrier with engine oil.
19. Position camshaft in cylinder head with the timing pin hole in the vertical position.

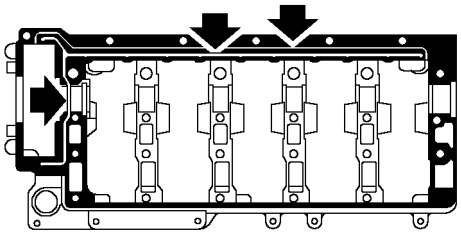

M12 7336

20. Apply an even film of sealant, Part No. STC 4600 to camshaft carrier face and spread to an even film using a roller.

CAUTION: Ensure sealant does not block oilways (arrowed) or contaminate camshaft bearings. Assembly and bolt tightening must be completed within 20 minutes of applying sealant.

21. Fit camshaft carrier ensuring it is correctly located on dowels.
22. Fit and lightly tighten new camshaft carrier bolts.

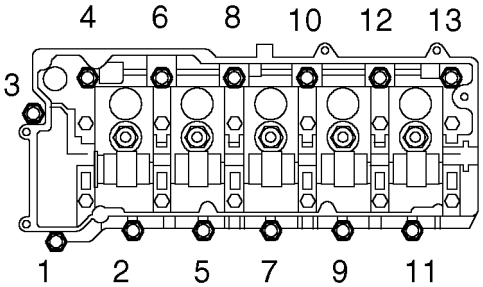

M12 7337

23. Using sequence shown, progressively tighten bolts to ***25 Nm (18 lbf.ft)*** .
24. Lubricate a new camshaft rear oil seal with engine oil, fit seal using a suitable mandrel.
25. Position rocker shaft on camshaft carrier, ensuring rocker shaft is located on dowel.
26. Fit new rocker shaft retaining bolts and working from the centre outwards, tighten bolts progressively to ***32 Nm (24 lbf.ft)*** .
27. Lubricate a new 'O' ring with engine oil and fit to injector harness multiplug.
28. Fit injector harness and connect multiplugs.
29. Clean fuel connector block and mating face.
30. Lubricate a new fuel filter 'O' ring with engine oil.
31. Fit new fuel filter, 'O' ring and gasket.

CAUTION: Gasket must be fitted dry.

32. Fit fuel connector block spacer and gasket (if fitted).
33. Fit fuel connector block, fit bolts and tighten to ***25 Nm (18 lbf.ft)*** .
34. Clean glow plugs.
35. Fit glow plugs to cylinder head and tighten to ***16 Nm (12 lbf.ft)*** .
36. **Engine Serial No. Prefixes 15P to 19P:-** Lubricate new 'O' rings with engine oil and fit to spill return pipe; fit pipe and tighten connectors to ***20 Nm (15 lbf.ft).***
37. Fit new cylinder head gasket. ***See this Section.***

CAUTION: Ensure that the fuel injector rockers are adjusted following the procedures given in Gasket - Cylinder head - Refit.

GASKET - ENGINE SUMP

Service repair no - 12.60.38.01

Remove

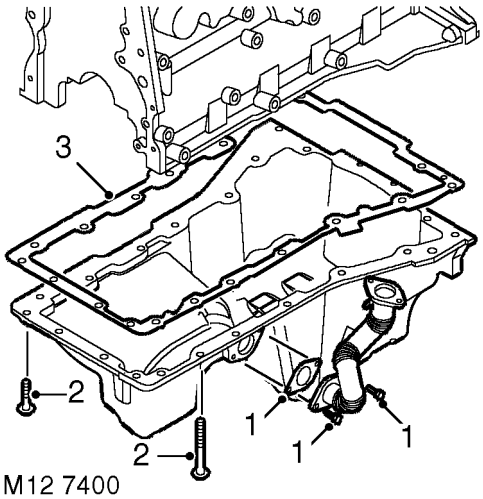

1. Remove 2 bolts securing centrifuge oil drain pipe to sump, remove and discard gasket.

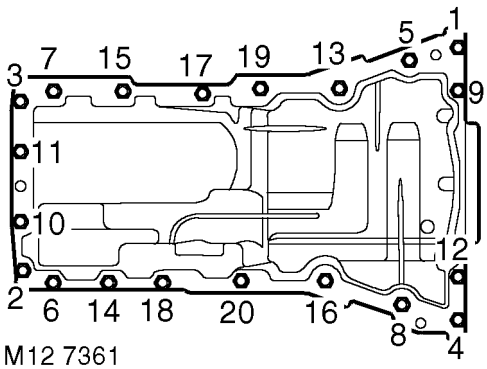

2. Using sequence shown and noting their fitted positions, remove 20 bolts securing sump to cylinder block.
3. Remove sump, remove and discard gasket.

CAUTION: Do not lever between sump and cylinder block.

Refit

1. Clean sump and mating faces, ensure bolt holes in cylinder block are clean and dry.
2. Using suitable solvent, remove all traces of sealant from joint faces of timing chain cover and crankshaft rear oil seal housing.
3. Clean centrifugal filter oil drain pipe and mating faces.

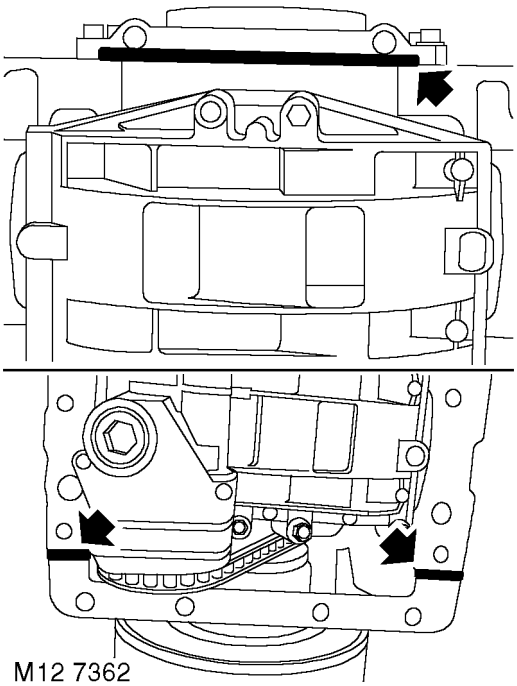

4. Apply a bead of sealant, Part No. STC 3254 to joint faces of timing chain cover and crankshaft rear oil seal housing.

CAUTION: Assembly and bolt tightening must be completed within 20 minutes of applying sealant.

5. Position new sump gasket.

CAUTION: Gasket must be fitted dry.

6. Position sump, fit and lightly tighten bolts ensuring they are in their original fitted positions.

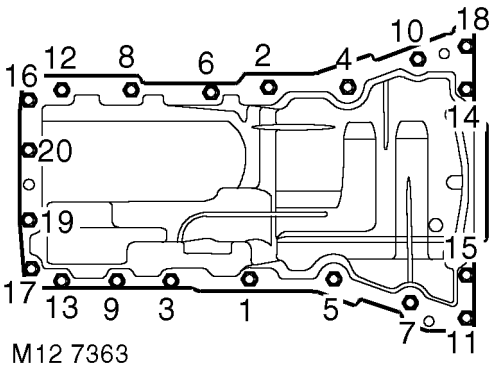

7. Using sequence shown, tighten sump bolts to ***25 Nm (18 lbf.ft)*** .
8. Fit new centrifuge oil drain pipe gasket.

CAUTION: Gasket must be fitted dry.

9. Fit centrifuge oil drain pipe, fit bolts and tighten to ***10 Nm (7 lbf.ft)*** .

SEAL - CRANKSHAFT - REAR

Service repair no - 12.21.20.01

Remove

1. Remove flywheel. ***See Repair.***
2. Remove sump gasket. ***See this Section.***

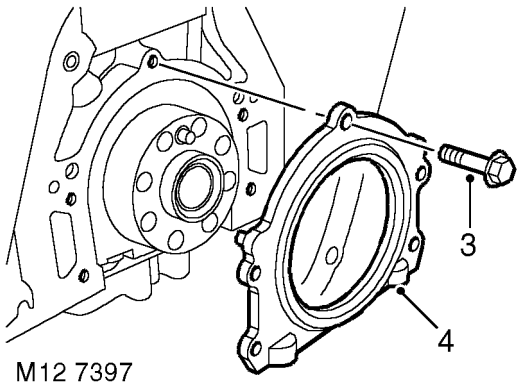

3. Remove 5 bolts securing crankshaft rear oil seal housing to cylinder block.
4. Remove and discard crankshaft rear oil seal and housing.

NOTE: Dowel located.

Refit

1. Clean crankshaft rear oil seal housing mating face on cylinder block, ensure bolt and dowel holes are clean and dry. Remove all traces of oil from oil seal running surface on crankshaft.

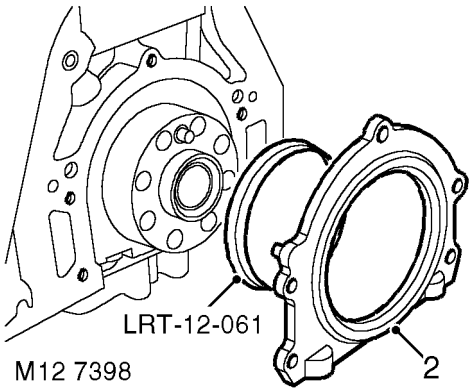

2. Position seal protector **LRT-12-061** over crankshaft boss. Fit new seal and housing, remove **LRT-12-061**.

CAUTION: Oil seal must be fitted dry.

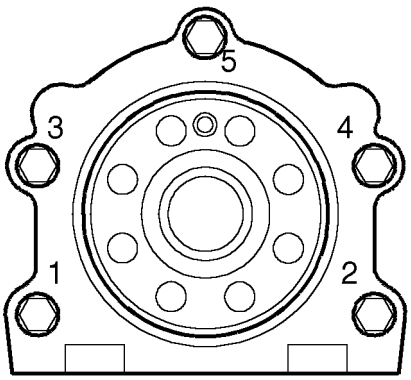

M12 7339

3. Fit oil seal housing bolts and using sequence shown, tighten to ***9 Nm (7 lbf.ft)*** .
4. Fit sump gasket. ***See this Section.***
5. Fit flywheel. ***See Repair.***

STARTER RING GEAR

Service repair no - 12.53.19

Remove.

1. Remove flywheel. ***See Repair.***

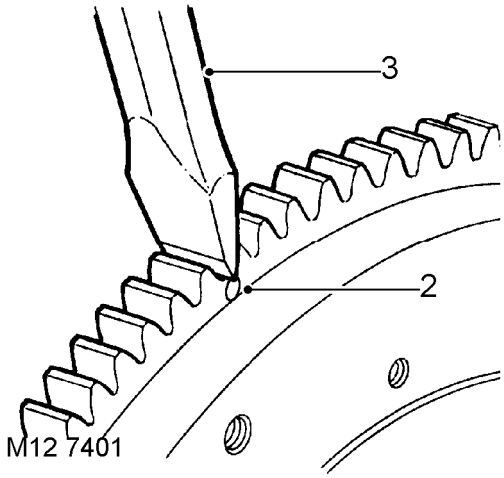

2. Drill a 3 mm (0.12 in) diameter hole at root of 2 teeth.
3. Apply a cold chisel to root of teeth, break ring gear and remove from flywheel.

WARNING: SUITABLE EYE PROTECTION MUST BE WORN.

Refit

1. Heat ring gear evenly to 350°C, indicated by light blue colour.
2. Locate ring gear on flywheel and press on to flange.

WARNING: Handle hot ring gear with care.

3. Allow ring gear to air cool.
4. Fit flywheel. ***See Repair.***

PUMP - OIL

Service repair no - 12.60.26.02

Remove

1. Remove sump gasket. ***See this Section.***

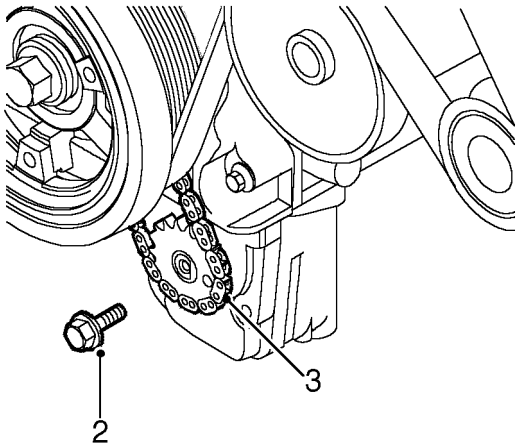

M12 7357

2. Remove bolt securing oil pump drive sprocket.
3. Release drive sprocket from chain, remove sprocket.

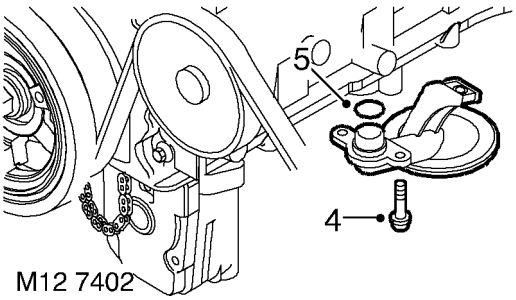

M12 7402

4. Remove 3 Torx screws securing oil pick-up strainer, remove strainer.
5. Remove and discard 'O' ring.

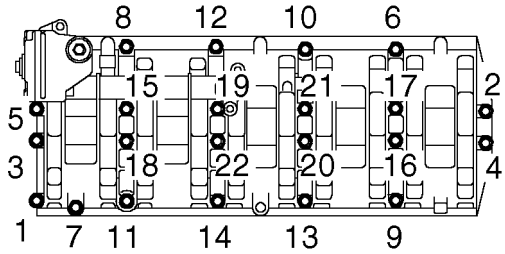

M12 7359

6. Using sequence shown, remove and discard 22 bolts securing oil pump and stiffener plate assembly to cylinder block.

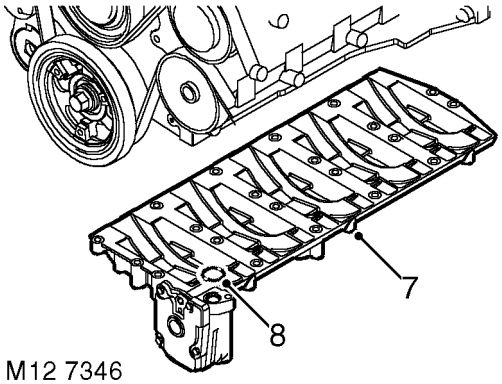

M12 7346

7. Remove oil pump and stiffener plate assembly.

NOTE: Dowel located.

8. Remove and discard 'O' ring from oil pump housing outlet.

Inspection

CAUTION: Inspection/overhaul procedures for the oil pump are limited to carrying out dimensional checks. In the event of wear or damage being found, a replacement pump and stiffener plate assembly must be fitted.

Oil pump

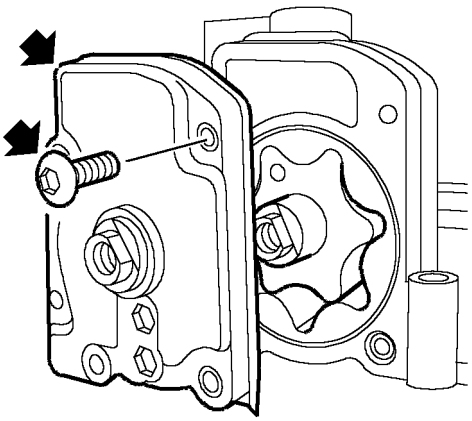

M12 7435

1. Remove and discard 5 screws securing cover to oil pump, remove cover.

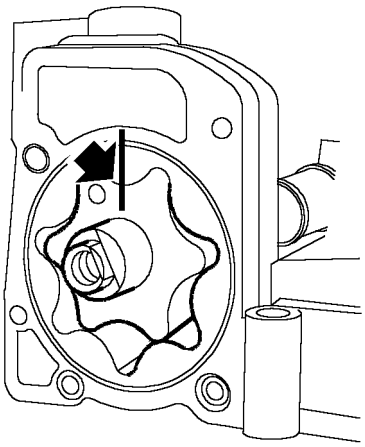

M12 7428

2. Using a felt tipped pen, make suitable alignment marks between inner and outer rotors and pump body.
3. Remove inner and outer rotors.
4. Check rotors, cover and pump body for signs of scoring and wear.
5. Fit rotors ensuring that reference marks are aligned and identification mark on inner rotor is facing outwards.

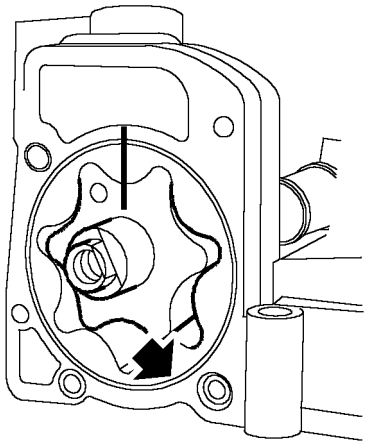

M12 7436

6. Using feeler gauges, check pump body to outer rotor clearance:
   Pump body to outer rotor clearance = 0.295 to 0.375 mm (0.012 to 0.015 in)

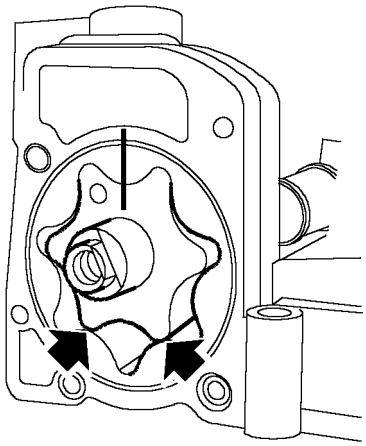

M12 7437

7. Using feeler gauges, check clearance of inner to outer rotor in 2 positions, both clearances must be within limit given:
   Inner to outer rotor clearance = 0.13 mm (0.05 in)

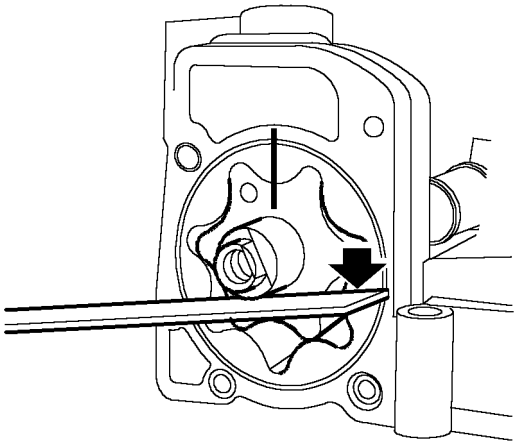

M12 7438

8. Place a straight edge across pump body and using feeler gauges, measure end-float of outer rotor:
   Outer rotor end-float = 0.038 to 0.075 mm (0.001 to 0.003 in)

9. Check drive shaft bush in pump cover for signs of scoring and wear.
10. Renew oil pump and stiffener plate assembly if excessive scoring exists or clearances exceed limits given.
11. Lubricate pump rotors and drive shaft bush with engine oil.
12. Fit rotors ensuring reference marks are aligned and identification mark on inner rotor is facing forwards.
13. Fit cover to pump, fit 5 new screws and tighten by diagonal selection to ***6 Nm (4.5 lbf.ft)*** .
14. Check that pump rotors rotate freely.

Oil pressure relief valve

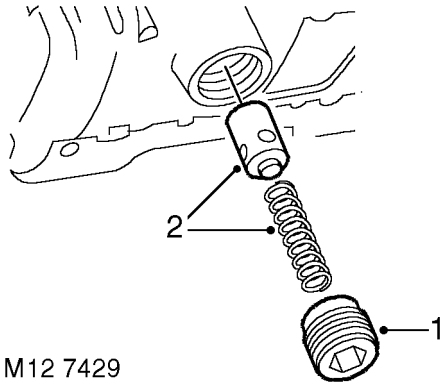

M12 7429

1. Remove and discard oil pressure relief valve plug.
2. Remove spring and relief valve plunger.
3. Clean valve plunger and spring.
4. Check valve plunger and relief valve bore for scoring and corrosion.

NOTE: Light scoring and corrosion may be removed using grade 600 emery cloth soaked in oil.

5. Check spring for distortion, check free length of spring:
   Spring free length = 42.00 mm (1.65 in)

CAUTION: Renew relief valve as an assembly.

6. Lubricate valve plunger and seating.
7. Fit valve plunger and spring to oil pump.
8. Apply Loctite 243 sealant to threads of a new plug.

CAUTION: Do not attempt to fit original plug.

9. Fit plug and tighten to ***23 Nm (17 lbf.ft)*** .

Refit

1. Clean mating faces of oil pump, stiffener plate assembly and cylinder block; ensure bolt and dowel holes are clean and dry.
2. Lubricate a new 'O' ring with engine oil and fit to oil pump housing outlet.
3. Position oil pump and stiffener plate assembly on to cylinder block ensuring 2 dowels are correctly located.

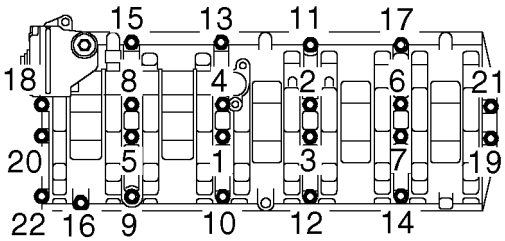

M12 7360

4. Fit new bolts and using sequence shown, tighten to ***13 Nm (10 lbf.ft)*** .
5. Lubricate a new 'O' ring with engine oil and fit to oil pick-up strainer.
6. Clean threads of oil pick-up strainer Torx screws and apply Loctite 242 to threads.
7. Fit oil pick-up strainer, fit Torx screws and tighten to ***10 Nm (8 lbf.ft)*** .
8. Position oil pump drive sprocket to chain and oil pump ensuring that the 'D' shape on the drive sprocket is located on the flat on the oil pump drive shaft.
9. Clean threads of oil pump drive sprocket retaining bolt and apply Loctite 242 to threads.
10. Fit oil pump drive sprocket bolt and tighten to ***25 Nm (18 lbf.ft)*** .
11. Fit sump gasket. ***See this Section.***

TIMING CHAIN AND SPROCKETS

Service repair no - 12.65.13.01

Remove

1. Remove cylinder head gasket. ***See this Section.***

CAUTION: If timing chain tensioner is to be replaced, ensure tensioner is correct for engine. Tensioner bodies are colour coded as follows:- Engine Serial No. Prefixes 10P to 14P - BLACK with, additionally, on later engines, YELLOW on tensioner hex. head. Engine Serial No. Prefixes 15P to 19P:- Body is coloured YELLOW. Later tensioners may be fitted to early engines provided that the modified adjustable guide is also fitted.

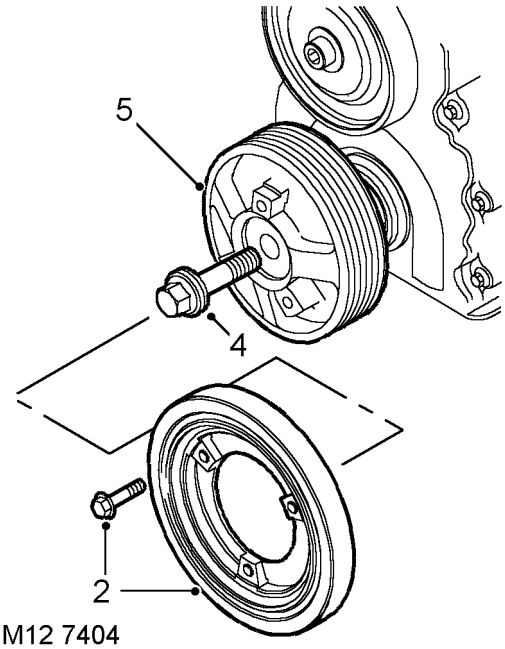

M12 7404

2. Remove 3 bolts securing crankshaft damper to pulley, remove damper.
3. Position **LRT-51-003** to crankshaft pulley and secure with 2 bolts.
4. Using assistance, restrain engine and remove crankshaft pulley bolt; discard bolt.

WARNING: CRANKSHAFT BOLT IS TIGHTENED TO 460 Nm (340 lbf.ft), ENSURE THAT ENGINE IS ADEQUATELY RESTRAINED.

5. Remove crankshaft pulley, remove bolts and tool.
6. Remove sump gasket. ***See this Section.***

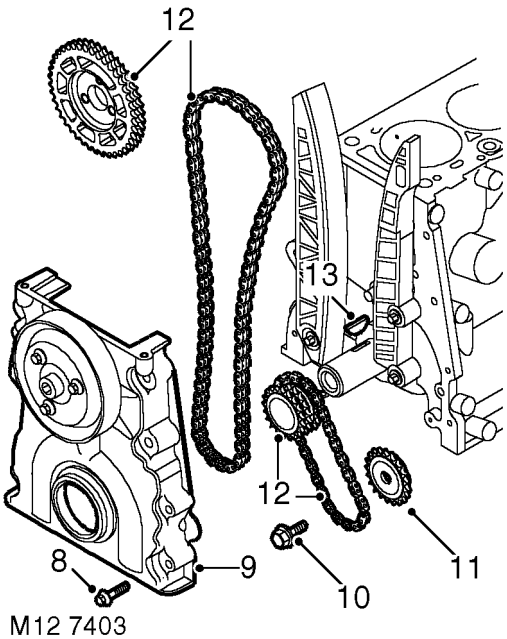

7. Noting their fitted positions, remove 8 bolts securing timing chain cover.
8. Remove timing chain cover.

NOTE: Dowel located.

9. Remove bolt securing oil pump drive sprocket.
10. Remove oil pump drive sprocket.
11. Remove camshaft and crankshaft sprockets together with timing and oil pump drive chains.
12. Remove Woodruff key from crankshaft.

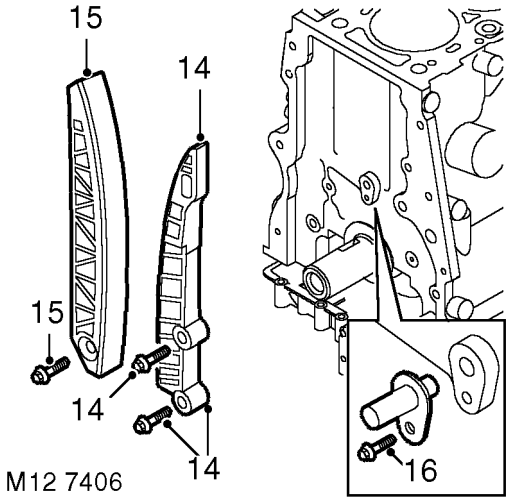

13. Remove 2 bolts and remove timing chain fixed guide.
14. Remove bolt and remove timing chain adjustable guide.
15. Remove bolt and remove timing chain lubrication jet.

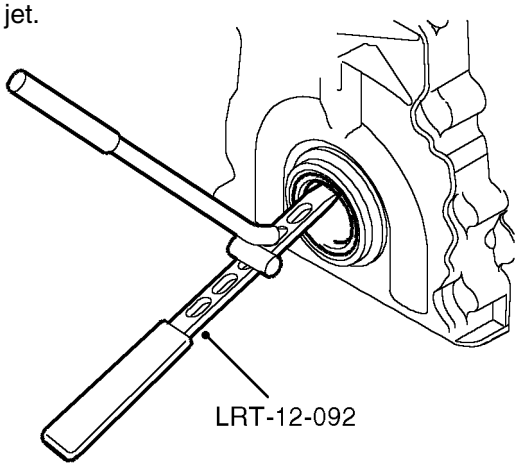

M12 7407

16. Using tool **LRT-12-092**, remove and discard oil seal from timing cover.

Inspection

1. Clean all components.
2. Check condition of timing chain running surfaces on adjustable and fixed guides.

CAUTION: Adjustable guide fitted to Engine Serial No. Prefixes 15P to 19P may be fitted to Engine Serial No. Prefixes 10P to 14P provided that timing chain tensioner having a YELLOW colour coded body is also fitted.

3. Check timing chains and sprockets for signs of wear.

CAUTION: Timing chains and sprockets fitted to Engine Serial No. Prefixes 15P to 19P may be fitted to Engine Serial No. Prefixes 10P to 14P as an assembly only, oil pump sprockets are interchangeable. Timing chains fitted to Engine Serial No. Prefixes 15P to 19P have BRONZE coloured timing links.

4. Check that drilling in timing chain lubrication jet is clear.
5. Clean oil seal recess in timing cover and oil seal running surface on crankshaft.
6. Remove all traces of sealant from mating faces of timing cover and cylinder block using suitable solvent.

CAUTION: Do not use metal scrapers.

7. Ensure bolt and dowel holes are clean and dry.
8. Clean oil pump sprocket bolt threads.

Refit

1. Fit timing chain lubrication jet.
2. Fit bolt securing lubrication jet and tighten to ***10 Nm (7 lbf.ft).***
3. If crankshaft has been rotated, check that No. 1 piston is at TDC using the following procedures:

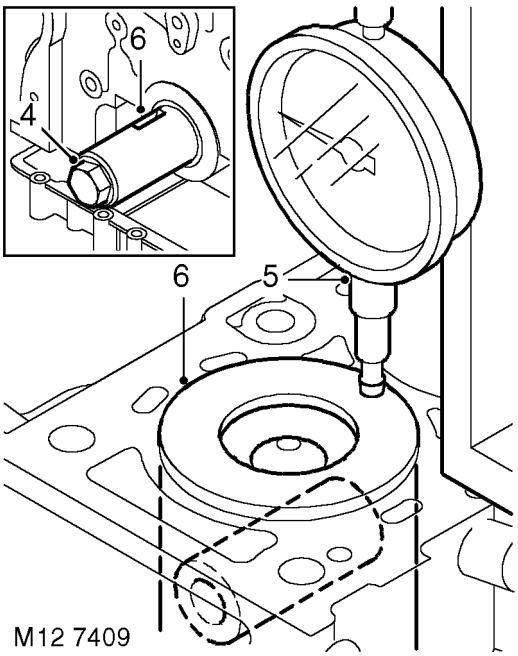

4. Temporarily fit and lightly tighten a new crankshaft pulley bolt.
5. Assemble a magnetic base DTI to cylinder block top face, position stylus to cylinder block top face and zero gauge.
6. Using crankshaft pulley bolt, rotate crankshaft clockwise until No. 1 piston is at top of its stroke and Woodruff key slot in crankshaft is at 12 o'clock position.
7. Position stylus of DTI to No. 1 piston crown and rotate crankshaft until highest reading is indicated on DTI.
8. Check that Woodruff key slot in crankshaft is still at 12 o'clock position indicating No. 1 piston is at TDC firing.
9. Remove DTI.

10. Remove crankshaft pulley bolt.
11. Fit Woodruff key to crankshaft.
12. Fit oil pump drive chain to rear row of teeth on crankshaft sprocket i.e. teeth furthest away from timing mark on sprocket.
13. Fit sprocket to crankshaft ensuring that timing mark on sprocket is facing towards front end of crankshaft.
14. Fit oil pump drive sprocket to oil pump and drive chain ensuring that 'D' shape on sprocket is located on flat on oil pump drive shaft.
15. Apply Loctite 242 to threads of oil pump drive sprocket bolt, fit bolt and tighten to ***25 Nm (18 lbf.ft)*** .
16. Fit timing chain fixed guide, fit bolts and tighten to:
    M6 bolt - ***10 Nm (7 lbf.ft)***
    M10 bolt - ***45 Nm (34 lbf.ft)***
17. Fit timing chain adjustable guide, fit bolt and tighten to ***25 Nm (18 lbf.ft)*** .

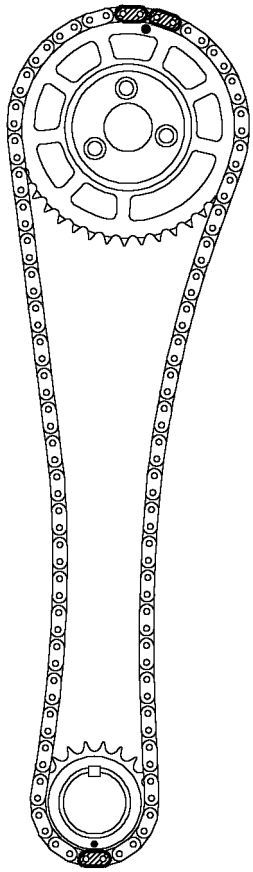

M12 4807

18. Fit camshaft sprocket to timing chain with timing mark on sprocket between the 2 coloured links, suitably retain sprocket to chain.
19. Fit timing chain to crankshaft sprocket aligning coloured link to timing mark on sprocket.

CAUTION: Ensure timing marks are positioned as shown - No. 1 piston at TDC firing.

20. Apply an even film film of sealant, Part No. STC 4600 to mating face of timing cover and spread to an even film using a roller.

CAUTION: Assembly and bolt tightening must be completed within 20 minutes of applying sealant.

21. Fit timing cover, fit bolts in their original fitted positions and working from the centre outwards, tighten progressively to ***27 Nm (20 lbf.ft)*** .

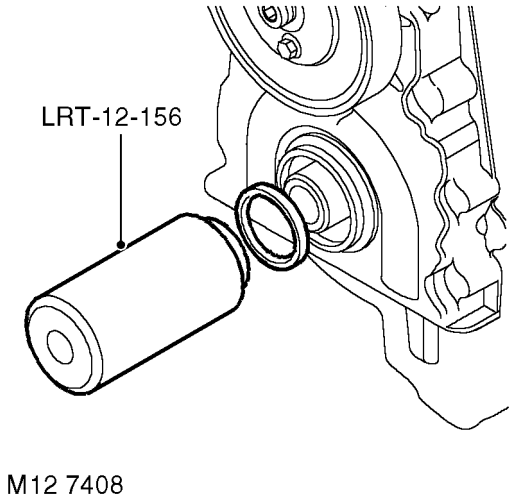

22. Fit oil seal guide, from seal kit, over end of crankshaft.
23. Fit new oil seal into timing cover using **LRT-12-156**.

CAUTION: Oil seal must be fitted dry.

24. Remove **LRT-12-156** and oil seal guide.
25. Fit crankshaft pulley, fit crankshaft pulley bolt.
26. Fit **LRT-51-003** to crankshaft pulley and secure with 2 bolts.
27. Using assistance, restrain engine and using a torque multiplier, tighten crankshaft bolt to ***460 Nm (340 lbf.ft)*** .

WARNING: DUE TO THE HIGH TORQUE LOADING REQUIRED, IT IS ESSENTIAL THAT ENGINE IS ADEQUATELY RESTRAINED.

28. Remove **LRT-51-003.**
29. Position damper to crankshaft pulley, fit 3 bolts and tighten to ***80 Nm (60 lbf.ft)*** .
30. Fit sump gasket. ***See this Section.***
31. Fit cylinder head gasket. ***See this Section.***

BEARINGS - CONNECTING RODS

Service repair no - 12.17.16.01

Remove

1. Remove oil pump. ***See this Section.***

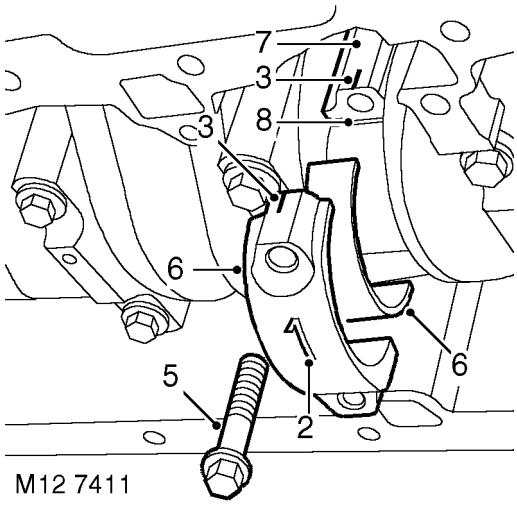

2. Mark cylinder reference number on each connecting rod big-end bearing cap.
3. Make suitable alignment marks between each big-end bearing cap and connecting rod.

CAUTION: Due to the 'fracture split' method of manufacturing connecting rods and bearing caps, incorrect fitting of cap to connecting rod will damage mating faces and necessitate replacement of connecting rod assembly.

4. Rotate crankshaft clockwise until No. 1 big-end is at BDC.
5. Remove and discard 2 bolts securing No. 1 big-end bearing cap.
6. Remove bearing cap, remove and discard big-end bearing shell.
7. Push connecting rod up cylinder bore until rod is clear of crankshaft journal.

CAUTION: Ensure that connecting rod does not contact cylinder bore or oil squirt jet and piston does not contact the valves or EUI's if the cylinder head is fitted.

8. Remove and discard big-end bearing shell from connecting rod.

CAUTION: Engine Serial No. Prefixes 10P to 14P:- The 'sputter type' connecting rod bearings fitted to these engines, identified by them having a slightly darker colour than the bearing cap shells should be replaced with the 'plain type' bearing shells fitted to Engine Serial No. Prefixes 15P to 19P.

9. Repeat above procedures for remaining big-end bearings.

CAUTION: Keep bearing caps in their fitted order.

Inspection

NOTE: If crankshaft is to be removed, big-end bearing journals should be checked when crankshaft is inspected.

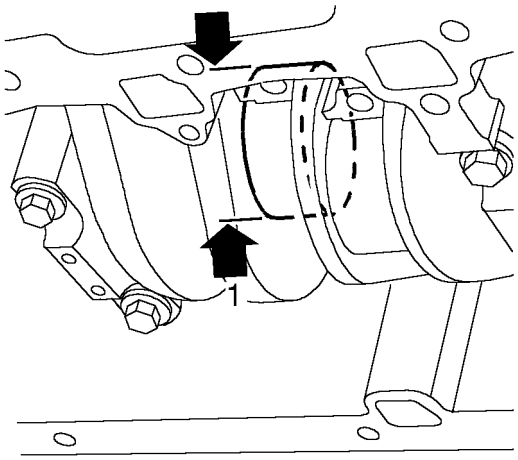

M12 7412

1. Check each big-end bearing journal for scoring, wear and ovality, make 3 checks at 120°intervals in centre of journal:
   Big-end journal diameter =
   54.000 ±0.01 mm (2.125 ±0.0004 in)

CAUTION: Big-end journals may not be reground undersize,only one size of big-end bearing shell is available and if journals are found to be scored, oval or worn, crankshaft must be replaced. Big-end bearing shells must be replaced whenever they have been removed.

Refit

1. Clean connecting rod journals and bearing shell locations.
2. Lubricate new big-end bearing shells with engine oil and fit to connecting rods and bearing caps ensuring that the 'sputter bearings' are fitted to the connecting rods.

NOTE: 'Sputter type' bearing shells can be identified by them by having a slightly darker colour.

3. Rotate crankshaft until No. 1 big-end bearing journal is at BDC.
4. Taking care not to damage oil squirt jet or to displace bearing shell, pull connecting rod on to crankshaft journal.
5. Check that bearing shell is correctly located in big-end bearing cap.
6. Fit No. 1 big-end bearing cap ensuring that reference marks are aligned.
7. Lightly oil threads of new big-end bearing cap bolts, fit bolts and tighten to:
   Stage 1 - ***20 Nm (15 lbf.ft)***
   Stage 2 - ***Further 80°***

CAUTION: Do not carry out stages 1 and 2 in one operation.

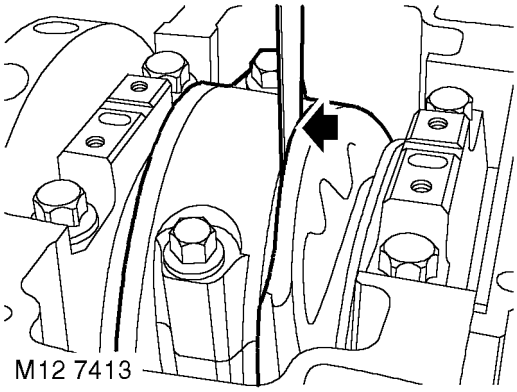

8. Carefully move connecting rod to one side of journal and using feeler gauges, measure end-float of connecting rod on journal: **Connecting rod end-float =** 0.2 to 0.5 mm (0.008 to 0.021 in).

CAUTION: If end-float exceeds limits given, replace connecting rod and repeat end-float check - See pistons, connecting rods and cylinder bores.

9. Repeat above procedures for remaining big-end bearings.
10. Fit oil pump. ***See this Section.***

PISTONS, CONNECTING RODS AND CYLINDER BORES

Service repair no - 12.17.02.01

Remove

1. Remove cylinder head gasket. ***See this Section.***
2. Remove connecting rod bearings. ***See this Section.***
3. Remove ridge of carbon from top of cylinder bore.
4. Suitably identify each piston and connecting rod assembly to its respective cylinder bore.
5. Carefully push connecting rod to top of cylinder bore taking care that connecting rod does not contact oil squirt jet or cylinder wall, remove each piston and connecting rod assembly in turn.
6. Using a suitable expander, remove and discard piston rings from pistons.
7. Using a squared off end of an old piston ring, clean carbon from ring grooves.
8. Clean carbon from piston crown and skirt.

CAUTION: Do not use abrasives on graphited area of piston skirt, do not use a wire brush or scraper on any part of the pistons.

9. Secure connecting rod in a soft jawed vice.
10. Suitably identify each piston to its connecting rod and fitted position of piston on rod.
11. Using suitable circlip pliers, remove and discard 2 circlips securing gudgeon pin.
12. Push gudgeon pin out of piston and connecting rod; remove piston.
13. Suitably identify each gudgeon pin to its respective piston.
14. Repeat above procedures for each piston.

Cylinder bores - Inspection

1. Check cylinder bores for scoring.

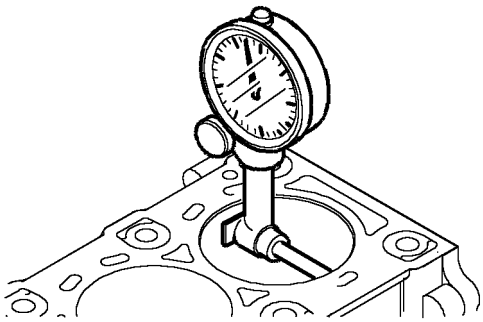

M12 7414

2. Measure cylinder bore wear and ovality at a point 70 mm (2.75 in) from top of each cylinder bore:
   Cylinder bore diameter = 84.460 to 84.442 mm (3.325 to 3.324 in)

CAUTION: Measurement must be taken from side to side and front to rear of bore:

CAUTION: Cylinder bore diameter and ovality must be within limits given above, no reboring, honing or glaze busting of cylinder bores is permissible; cylinder block must be replaced if bores are worn or excessively scored.

Pistons and connecting rods - Inspection

1. Check each piston for cracks, burning and damage.
2. Check connecting rods for alignment.

CAUTION: Do not attempt to straighten misaligned connecting rods.

3. Ensure small-end oil feed holes in connecting rods are clear.

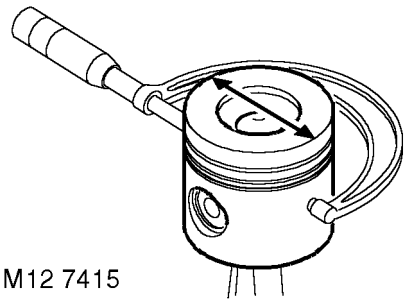

M12 7415

4. Measure and record diameter of each piston at right angles to gudgeon pin axis and 46 mm (1.81 in) from bottom of skirt:
   Piston diameter = 84.262 mm ± 0.009 mm (3.317 in ± 0.0003 in)

CAUTION: Measurement point must be on the graphited area of the piston.

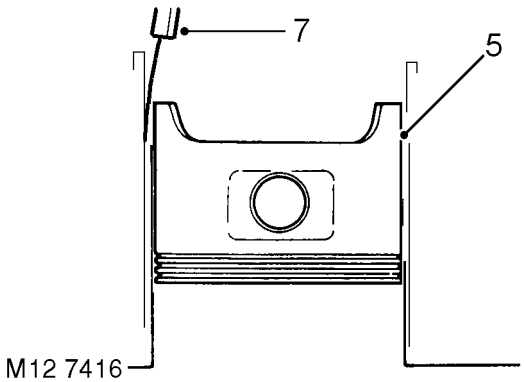

5. Starting with No. 1 piston, invert piston and with arrow on piston crown pointing towards REAR of cylinder block, insert piston into No. 1 cylinder bore.
6. Position piston with bottom of skirt 25 mm (1.0 in) from top of cylinder bore.
7. Using feeler gauges, measure and record clearance between piston skirt and LEFT HAND side of cylinder bore 60 mm (2.4 in) from top of bore:
   Piston to cylinder bore clearance = 0.171 to 0.207 mm (0.007 to 0.008 in)
8. Repeat above procedures for remaining pistons.

CAUTION: Oversize pistons are not available, if piston to cylinder bore clearance exceeds limits given, repeat check using a new piston; if clearances are still excessive, replace cylinder block.
Piston and 1st compression rings fitted to Engine Serial No. Prefixes 15P to 19P may be fitted to Engine Serial No. Prefixes 10P to 14P in engine sets only. Oil control and 2nd compression rings are interchangeable between all engines.

9. Check fit of each gudgeon pin in its piston. Pin must be a tight, sliding fit with no perceptible side play.

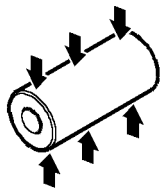

10. Measure gudgeon pin diameter at each end and centre of pin. Renew gudgeon pin and piston as an assembly if diameters are less than specified or if excessive pin to piston side play is evident.
    Gudgeon pin diameter = 29.995 to 30.000 mm (1.180 to 1.181 in)

11. Check connecting rod small-end bushes for wear, check that gudgeon pin is a sliding fit in the bush with no perceptible side play.

CAUTION: Small-end bushes cannot be replaced, a new connecting rod must be fitted.

Piston ring gaps - Checking

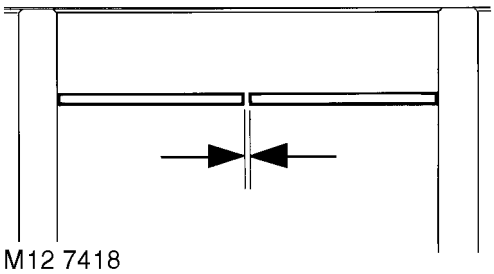

1. Insert new compression and oil control piston rings in turn into No. 1 cylinder bore 30 mm (1.25 in) from top of bore and check ring fitted gaps; ensure rings are kept square to bore when checking gaps.
   1st compression ring fitted gap = 0.30 to 0.40 mm (0.012 to 0.016 in)
   2nd compression ring fitted gap = 0.40 to 0.60 mm (0.016 to 0.024 in)
   Oil control ring fitted gap = 0.25 to 0.50 mm (0.01 to 0.02 in)
   Repeat for each cylinder bore in turn.

CAUTION: Ensure rings are suitably identified with the cylinder bore in which they were checked and are fitted to the piston for that bore.

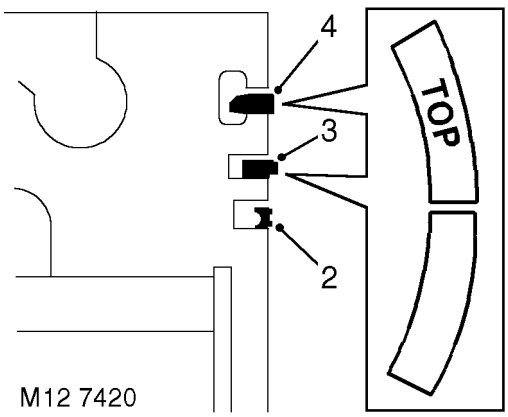

2. Fit oil control expander and ring to piston.
3. Fit 2nd compression ring with 'TOP' marking upwards.
4. Fit 1st compression ring with 'TOP' marking upwards.

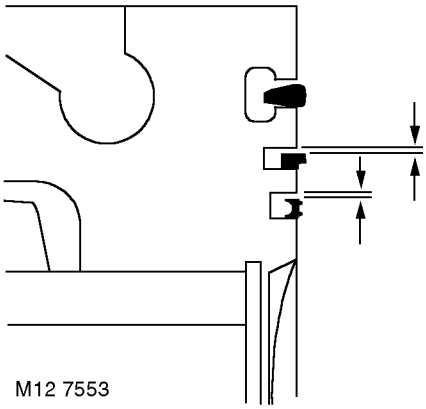

5. Check piston ring to groove clearance:
   1st compression ring - Not measured
   2nd compression ring = 0.050 to 0.082 mm (0.02 to 0.003 in)
   Oil control ring = 0.050 to 0.082 mm (0.02 to 0.003 in)

Pistons and connecting rods - Assembling

1. Lubricate gudgeon pin, gudgeon pin holes in piston and small-end bush with engine oil.
2. Position piston to its respective connecting rod with arrow on piston crown on the same side as the cast boss on the connecting rod.
3. Fit gudgeon pin to its respective piston and connecting rod; secure with new circlips.

CAUTION: Ensure circlips are fully seated in their grooves.

4. Repeat above procedures for remaining pistons.
5. Lubricate piston rings and cylinder bores with engine oil.
6. Check that rings are free to rotate, position ring gaps at 120°to each other and away from the thrust - LH side of piston - viewed from front of piston.
7. Using a suitable piston ring clamp, compress piston rings.
8. Insert connecting rod and piston into its respective cylinder bore, ensuring that the arrow on piston crown and the cast boss on connecting rod are facing towards the front of the cylinder block.

CAUTION: Ensure that connecting rod does not contact cylinder bore or oil squirt jet. Do not pull connecting rod fully down cylinder bore at this stage.

9. Check that the cut-out in piston skirt is positioned above the oil squirt jet.
10. Repeat for other pistons in turn ensuring that pistons and connecting rods are fitted in cylinder bores from which they were removed.
11. Fit connecting rod bearings. ***See this Section.***

CAUTION: If new pistons, connecting rods or crankshaft have been fitted, it will be necessary to select correct thickness of cylinder head gasket. ***See this Section.***

CRANKSHAFT

Service repair no - 12.21.33.01

Remove

1. Remove timing chain and sprockets. ***See this Section.***
2. Remove crankshaft rear oil seal. ***See this Section.***
3. Remove connecting rod bearings. ***See this Section.***

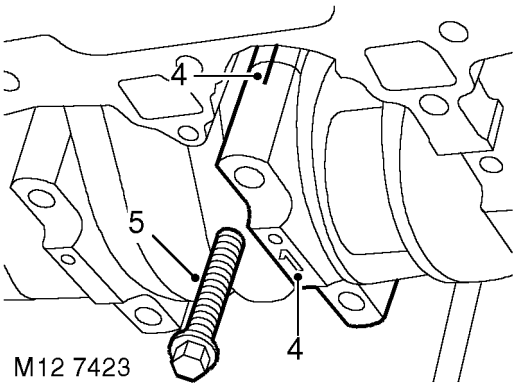

4. Check that cylinder reference number is on each main bearing cap. Make suitable alignment marks between each main bearing cap and cylinder block.
5. Starting at No. 3 main bearing cap and working outwards, progressively loosen, then remove 2 bolts securing each cap. Discard main bearing cap bolts.

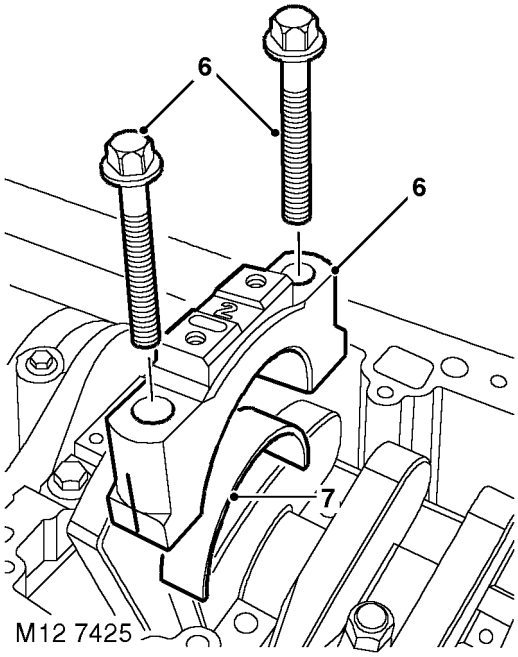

6. Fit 2 slave bolts into each main bearing cap in turn and ease bearing caps from cylinder block.
7. Remove and discard bearing shells from each cap.

NOTE: These bearing shells are plain.

8. Using assistance, remove crankshaft.
9. Remove and discard main bearing shells and 2 thrust washers from cylinder block.

NOTE: These bearing shells are grooved.

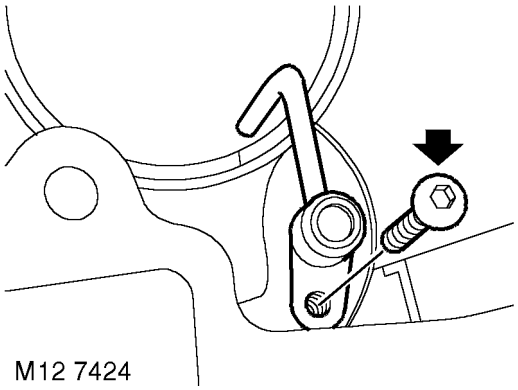

10. Remove Torx screw securing each oil squirt jet to cylinder block, remove squirt jets.

Cylinder block - Inspection

1. Clean main bearing shell and thrust washer locations in cylinder block, ensure bolt holes are clean and dry.
2. Clean main bearing caps.
3. Clean crankshaft bearing journals, check oilways are clear.
4. Ensure drillings in oil squirt jets are clear.
5. Check core plugs in cylinder block for corrosion or signs of leakage, seal replacement plugs with Loctite 243.

Crankshaft - Inspection

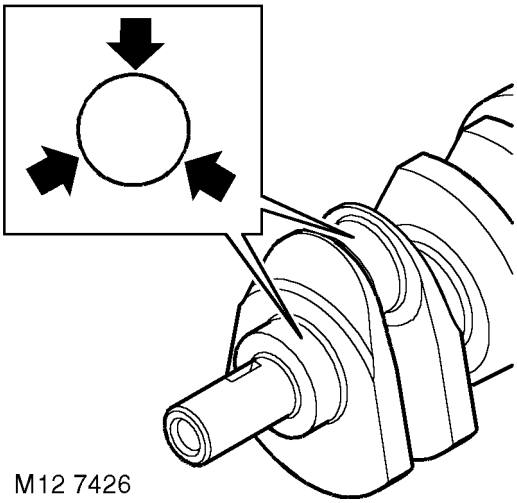

1. Check crankshaft main and big-end bearing journals for scoring, wear and ovality, make 3 checks at 120°intervals in centre of journals. Crankshaft bearing journal diameters:
   Main bearings =
   62.000 mm ±0.013 mm (2.441 in ±0.001 in)
   Big-end bearings =
   54.000 ±0.01 mm (2.125 ±0.0004in)

CAUTION: Crankshafts may not be reground, only one size of main and big-end bearing shell is available and if journals are found to be scored, oval or worn, crankshaft must be replaced. Main and big-end bearing shells and thrust washers must be replaced whenever they are removed.

Crankshaft spigot bush

1. Check crankshaft spigot bush for wear, replace if necessary using the following procedures:
2. Secure crankshaft in a suitably padded vice.
3. Tap a thread in spigot bush to accommodate a suitable impulse extractor.
4. Fit impulse extractor to spigot bush.
5. Remove spigot bush.
6. Clean spigot bush recess in crankshaft.
7. Fit new spigot bush to crankshaft using a suitable mandrel.

Crankshaft - Refit

1. Fit oil squirt jets, fit Torx screws and tighten to ***8 Nm (6 lbf.ft)*** .
2. Lubricate new, grooved, main bearing shells with engine oil and fit to cylinder block.
3. Lubricate new thrust washers with engine oil and fit, grooved side facing outwards, to recess in each side of cylinder block No. 3 main bearing.
4. Lubricate crankshaft journals with engine oil and using assistance, position crankshaft in cylinder block.
5. Lubricate new, plain, main bearing shells with engine oil and fit to main bearing caps.
6. Fit main bearing caps in their original fitted positions ensuring that reference marks are aligned.
7. Fit and lightly tighten new main bearing cap bolts.

CAUTION: Do not lubricate bolt threads.

8. Starting with No. 3 main bearing cap and working outwards, tighten main bearing cap bolts to:
   Stage 1 - ***33 Nm (24 lbf.ft)***
   Stage 2 - ***Further 90°***

CAUTION: Do not carry out stages 1 and 2 in one operation.

9. Check that crankshaft rotates smoothly.

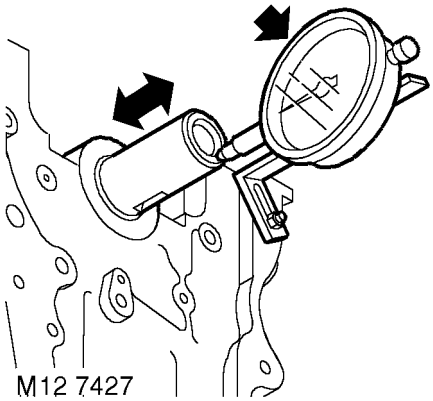

10. Assemble a magnetic base DTI to front of cylinder block with stylus of gauge on end of crankshaft.
11. Using suitably padded levers, move crankshaft rearwards and zero DTI.
12. Move crankshaft forwards and note crankshaft end-float reading on gauge.
    Crankshaft end-float = 0.02 to 0.25 mm (0.001 to 0.011 in)

CAUTION: Oversize thrust washers are not available, if end-float exceeds figure given, crankshaft must be replaced.

13. Remove DTI.
14. Fit connecting rod bearings. ***See this Section.***
15. Fit timing chain and sprockets. ***See this Section.***
16. Fit crankshaft rear oil seal. ***See this Section.***

17 - EMISSION CONTROL

CONTENTS

Page

DESCRIPTION AND OPERATION

EGR SYSTEM COMPONENTS - TYPE 1 2
EGR SYSTEM COMPONENTS - TYPE 2 4
EMISSION CONTROL SYSTEMS 6
CRANKCASE EMISSION CONTROL 7
EXHAUST GAS RECIRCULATION 8
EGR MODULATOR 9
INLET THROTTLE (ILT) MODULATOR 10
EGR VALVE 11
INLET THROTTLE (ILT) VALVE 12
IN-LINE AIR FILTER - PRE EUú MODELS 13
EGR SYSTEMS 14

REPAIR

VALVE - EGR - NON EU3 MODELS 1
VALVE - EGR - EU3 MODELS 2
INLET THROTTLE (ILT) MODULATOR 3
SOLENOID - VALVE - EGR 3

This page is intentionally left blank

EGR SYSTEM COMPONENTS - TYPE 1

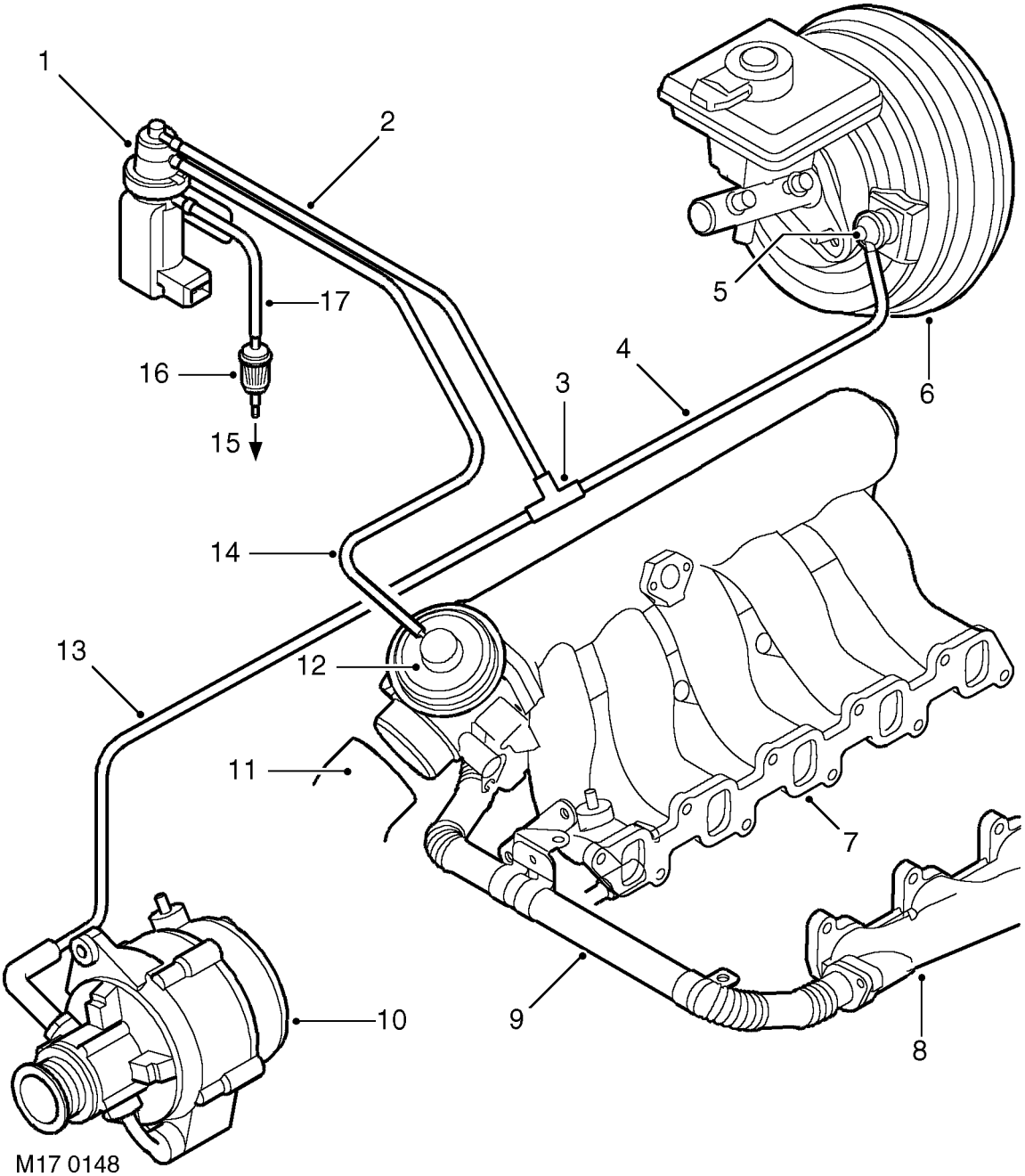

1. EGR Solenoid
2. Vacuum hose (light brown)
3. T-piece
4. Vacuum hose to brake servo
5. Non-return valve
6. Brake servo
7. Inlet manifold
8. Exhaust manifold
9. EGR pipe
10. Vacuum pump/alternator assembly
11. Air intake hose from intercooler
12. EGR valve assembly
13. Vacuum hose to vacuum pump
14. Vacuum hose to EGR valve suction port (blue)
15. To atmosphere
16. In-line filter
17. Vent hose - EGR solenoid to in-line filter (green)

EGR SYSTEM COMPONENTS - TYPE 2

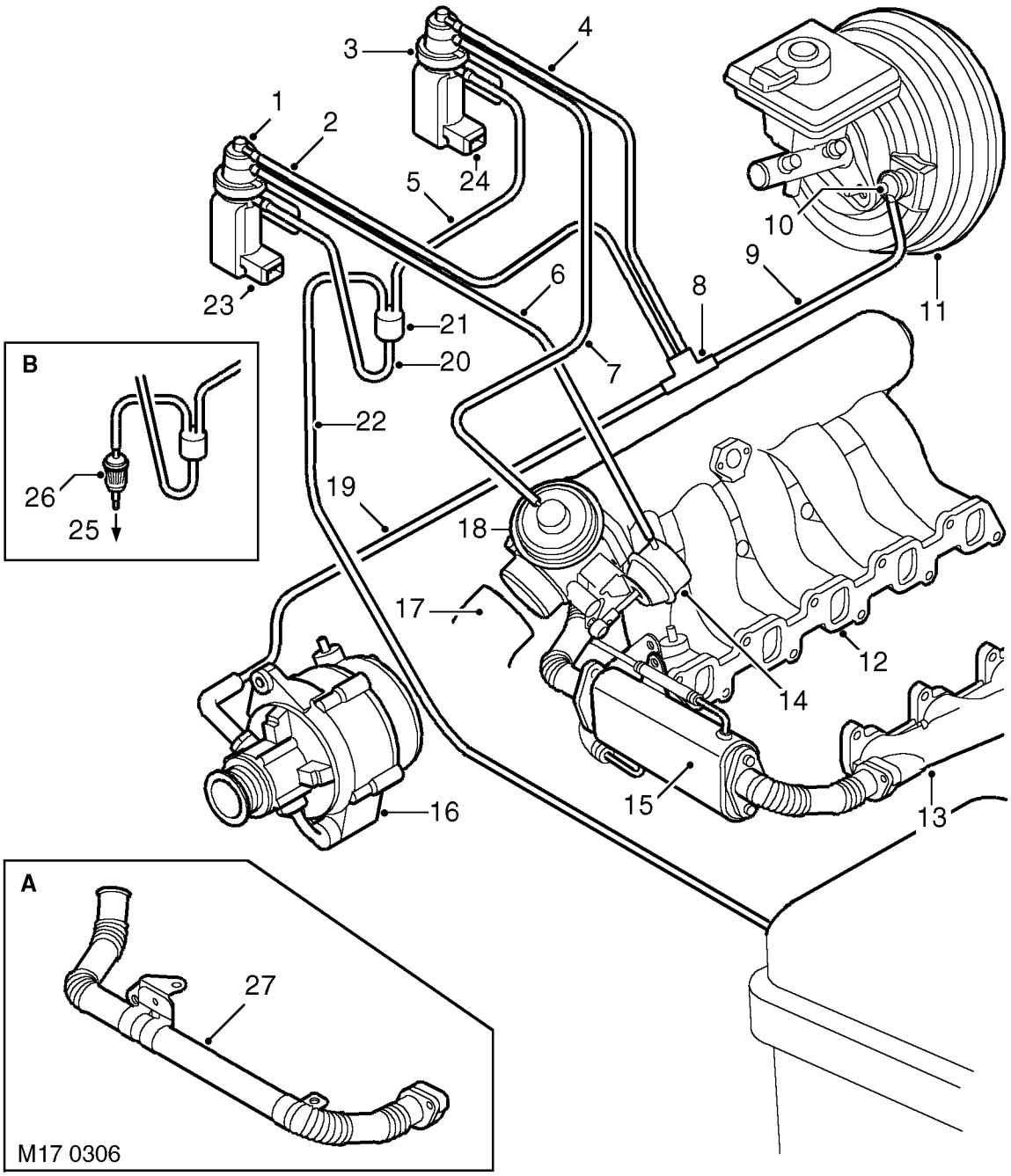

CAUTION: Inset A shows the Pre-EU3 condition for the EGR pipe. Inset B shows the Pre-EU3 condition filter and venting.

1. ILT valve modulator
2. ILT modulator vacuum hose (brown)
3. EGR valve modulator
4. EGR modulator vacuum hose (brown)
5. Vent hose - EGR modulator to in-line filter (green)
6. Vacuum hose to ILT valve suction port (blue)
7. Vacuum hose to EGR valve suction port (blue)
8. 'T'-piece (4-way)
9. Vacuum hose to brake servo
10. Non-return valve
11. Brake servo
12. Inlet manifold
13. Exhaust manifold
14. ILT valve
15. EGR cooler - EU-3 models
16. Vacuum pump/alternator assembly
17. Air intake hose from intercooler
18. EGR valve (incorporating ILT valve) assembly
19. Vacuum hose to vacuum pump
20. Vent hose - ILT valve modulator to in-line filter (green)
21. 3-way connector
22. Vent hose to air cleaner
23. ILT modulator harness connector (green)
24. EGR modulator harness connector (black)
25. To atmosphere - Pre-EU3 models
26. In-line filter - Pre-EU3 models
27. EGR pipe - Pre-EU3 models

EMISSION CONTROL SYSTEMS

Engine design has evolved in order to minimise the emission of harmful by-products. Emission control systems fitted to Land Rover vehicles are designed to maintain the emission levels within the legal limits pertaining for the specified market.

Despite the utilisation of specialised emission control equipment, it is still necessary to ensure that the engine is correctly maintained and is in good mechanical order, so that it operates at its optimum condition.

In addition to emissions improvements through engine design and the application of electronic engine management systems, special emission control systems are used to limit the pollutant levels developed under certain conditions. Two main types of additional emission control system are utilised with the Td5 engine to reduce levels of harmful emissions released into the atmosphere. These are as follows:

- Crankcase emission control - Also known as blow-by gas emissions from the engine crankcase.
- Exhaust gas recirculation - To reduce NO_2 emissions.

CRANKCASE EMISSION CONTROL

All internal combustion engines generate oil vapour and smoke in the crankcase as a result of high crankcase temperatures and piston ring and valve stem blow-by. A closed crankcase ventilation system is used to vent crankcase gases back to the air induction system and so reduce the emission of hydrocarbons.

Gases from the crankcase are drawn into the inlet manifold to be burnt in the combustion chambers with the fresh air/fuel mixture. The system provides effective emission control under all engine operating conditions.

Crankcase gases are drawn through the breather port in the top of the camshaft cover and routed through the breather hose and breather valve on the flexible air intake duct to be drawn into the turbocharger intake for delivery to the air inlet manifold via the intercooler.

An oil separator plate is included in the camshaft cover which removes the heavy particles of oil before the crankcase gas leaves via the camshaft cover port. The rocker cover features circular chambers which promote swirl in the oil mist emanating from the cylinder head and camshaft carrier. As the mist passes through the series of chambers between the rocker cover and oil separator plate, oil particles are thrown against the separator walls where they condense and fall back into the cylinder head via two air inlet holes located at each end of the rocker cover.

The breather valve is a pressure depression limiting valve which progressively closes as engine speed increases, thereby limiting the depression in the crankcase. The valve is of moulded plastic construction and has a port on the underside which plugs into a port in the flexible air duct. A port on the side of the breather valve connects to the camshaft cover port by means of a breather hose which is constructed from a heavy duty braided rubber hose which is held in place by hose clips. A corrugated plastic sleeve is used to give further protection to the breather hose. The breather valve is orientation sensitive, and ’TOP’ is marked on the upper surface to ensure it is mounted correctly.

It is important that the system is air tight. Hose connections to ports should be checked and the condition of the breather hose should be periodically inspected to ensure it is in good condition.

EXHAUST GAS RECIRCULATION

The exhaust gas recirculation (EGR) valve permits a controlled amount of exhaust gas to combine with the fresh air entering the engine. The exhaust gas reduces the combustion temperature by delaying the fuel burning rate, which assists in reducing the quantity of oxides of nitrogen.

On EU3 models, an EGR cooler is employed to further reduce the combustion temperature. By passing the exhaust gas through a bundle of pipes flooded by coolant, the density of the exhaust gas going into the engine is increased. This process further reduces the amount of NO_2 in the exhaust.

Recirculation of too much exhaust gas can result in higher emissions of soot, HC and CO due to insufficient air. The recirculated exhaust gas must be limited so that there is sufficient oxygen available for combustion of the injected fuel in the combustion chamber. To do this the ECM is used to control the precise quantity of exhaust gas to be recirculated in accordance with the prevailing operating conditions. Influencing factors include:

- The mass of air flow detected by the MAF sensor.
- The ambient air temperature detected by the AAP sensor. This is used to initiate adjustments to reduce the amount of smoke produced at high altitudes.
- The mass of air flow detected by the MAF sensor.
- The ambient air temperature detected by the AAP sensor. This is used to initiate adjustments to reduce the amount of smoke produced at high altitudes.

Other factors which are taken into consideration by the engine management system for determining the optimum operating condition include:

- Manifold inlet air temperature
- Coolant temperature
- Engine speed
- Fuel delivered

The main components of the EGR system are as follows.

EGR MODULATOR

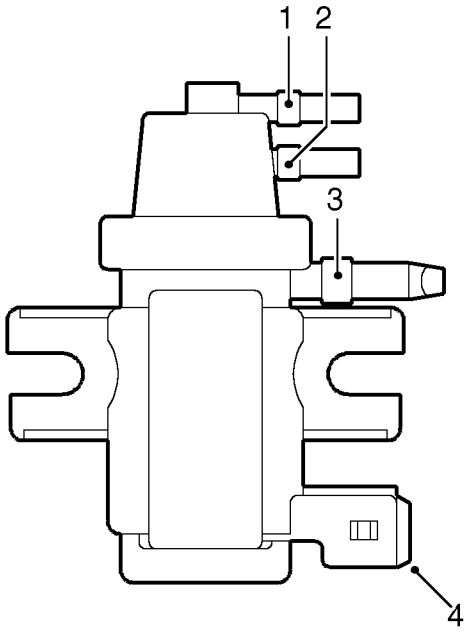

M17 0150

1. Port to vacuum source (white band)
2. Port to EGR valve (blue band)
3. Port to atmosphere via in-line filter (green band)
4. Harness connector

The EGR modulator is located on a plate fixed to the inner RH front wing. The modulator is attached to the plate by two studs, each with two nuts which secure the assembly to a rubber mounting, which helps reduce noise. The modulator must be mounted vertically with the two vacuum ports uppermost.

Modulator operation is controlled by a signal from the ECM which determines the required amount of EGR needed in response to inputs relating to air flow, engine operation, and ambient conditions. The modulator has a two pin connector at its base to connect it to the ECM via the engine harness.

The modulator features three ports:

- The top port is identified by a white band and connects to a T-piece in the vacuum line via a small bore light brown plastic hose. The two other ports on the T-piece connect to the vacuum line hoses of black vinyl tubing between the vacuum pump and the brake servo assembly attached to the bulkhead. The vacuum pump end of the tubing terminates in a rubber elbow, which gives a vacuum tight seal on the suction port of the vacuum pump. The brake servo end of the tubing terminates with a non-return valve in a plastic housing which plugs into the front face of the brake servo housing.
- The middle port is identified by a blue band, and connects to the suction port on the EGR valve through a small bore blue plastic hose.
- The lower port is identified by a green band and connects to atmosphere through an in-line filter via a small bore green plastic hose.

The blue and brown vacuum hoses are protected by corrugated plastic sheaths. The ends of the hoses are fitted with rubber boots to ensure vacuum tight seals at the component ports.

INLET THROTTLE (ILT) MODULATOR

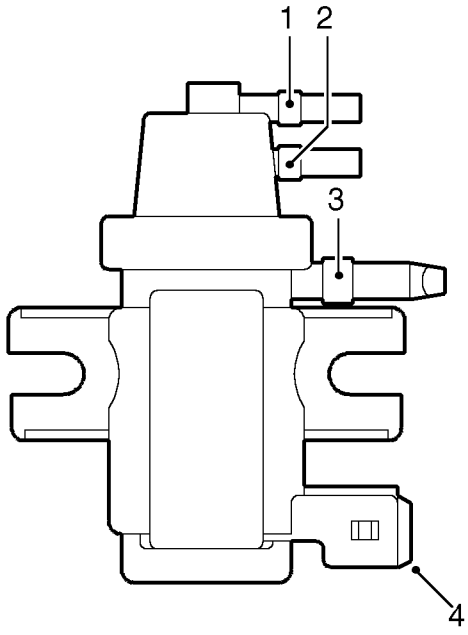

M17 0150

1. Port to vacuum source (white band)
2. Port to ILT valve (blue band)
3. Port to atmosphere via in-line filter (green band)
4. Harness connector (green)

The ILT modulator is located on a plate fixed to the inner wing on the RH side of the engine below the EGR modulator. The modulator is attached to the plate by two through-studs, each with two nuts which secure the modulator assembly to a rubber mounting which helps to reduce noise. The modulator must be mounted in the vertical orientation with the two vacuum ports uppermost.

The modulator operation is controlled by a signal from the ECM which determines the required ratio of exhaust gas to fresh inlet air needed in response to inputs relating to air flow and engine operating and ambient conditions. The modulator has a green two-pin connector at its base to connect it to the ECM through the engine harness.

The ILT valve modulator features three ports:

- The top port is identified by a white band and connects to a 'T'-piece in the vacuum line via a small-bore brown plastic hose where it is connected in parallel with the vacuum source line to the EGR valve modulator. The two other ports on the 'T'-piece connect vacuum line hoses of black vinyl tubing between the vacuum pump attached to the alternator and the brake-servo assembly attached to the bulkhead.
- The middle port is identified by a blue band and connects to the suction port on the ILT valve through a small-bore blue plastic hose.
- The lower port is identified by a green band and connects to atmosphere through an in-line filter via a green plastic hose and a three-way connector positioned in-line between the modulators and the filter. The ILT modulator hose is connected opposite to the two parallel ports at the three-way connector which connect the vent lines to the EGR valve modulator and the in-line filter. The other port of the in-line filter vents directly to atmosphere.

The blue and brown vacuum hoses are protected by corrugated plastic sheaths. The ends of the hoses are fitted with rubber boots to ensure vacuum tight seals at the component ports.

EGR VALVE

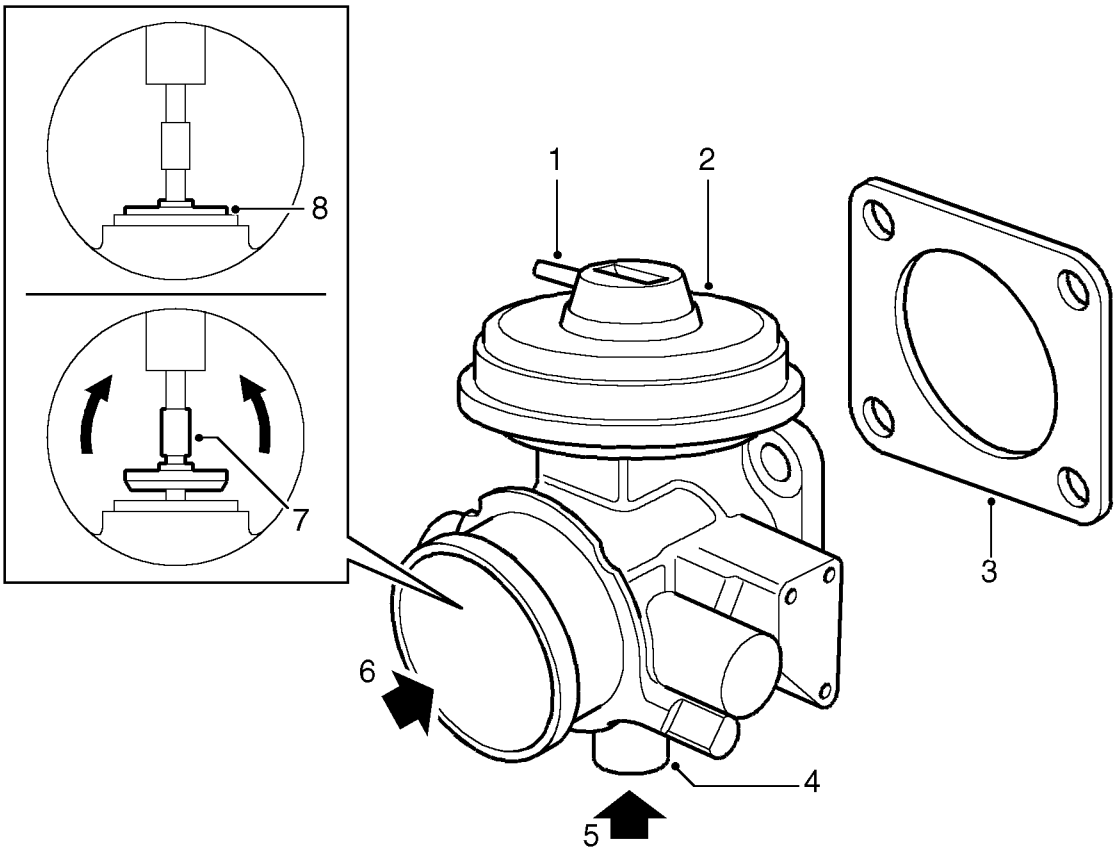

M17 0153

1. EGR valve vacuum port
2. EGR valve assembly
3. Gasket - EGR valve to inlet manifold
4. EGR pipe connection
5. Exhaust gas intake
6. Intake air
7. EGR valve open (vacuum applied to EGR valve)
8. EGR valve closed (no vacuum applied to EGR valve)

The EGR valve is a cast and machined assembly which locates on the front end of the inlet manifold assembly. The machined faces of the EGR assembly and the inlet manifold are attached attached together using four bolts passing through the four corners of a flange in the EGR assembly to tappings in the front face of the inlet manifold. A gasket is used to seal the interface between the EGR valve and the front face of the inlet manifold. The gasket should be changed every time the EGR valve assembly is removed from the air intake manifold.

The intake side of the EGR valve allows the passage of fresh intercooled air through to the inlet manifold via a rubber hose which is attached to the front face of the EGR valve assembly by a metal band clamp. The bottom port of the EGR valve is connected to the EGR pipe using a metal band clamp.

A vacuum port on top of the EGR valve connects the EGR solenoid through a blue, small bore suction hose. When a vacuum is applied to the EGR valve suction port it causes a spindle with sealing disc (EGR valve) to be raised, thereby opening the port at the EGR pipe to allow the recirculated exhaust gas to pass through into the inlet manifold. When the vacuum is removed from the suction port the EGR valve returns to its rest position under the influence of a spring to tightly close the exhaust gas port. Thus, controlled opening of the EGR valve determines the mass of recirculated gas allowed to flow through to the inlet manifold.

INLET THROTTLE (ILT) VALVE

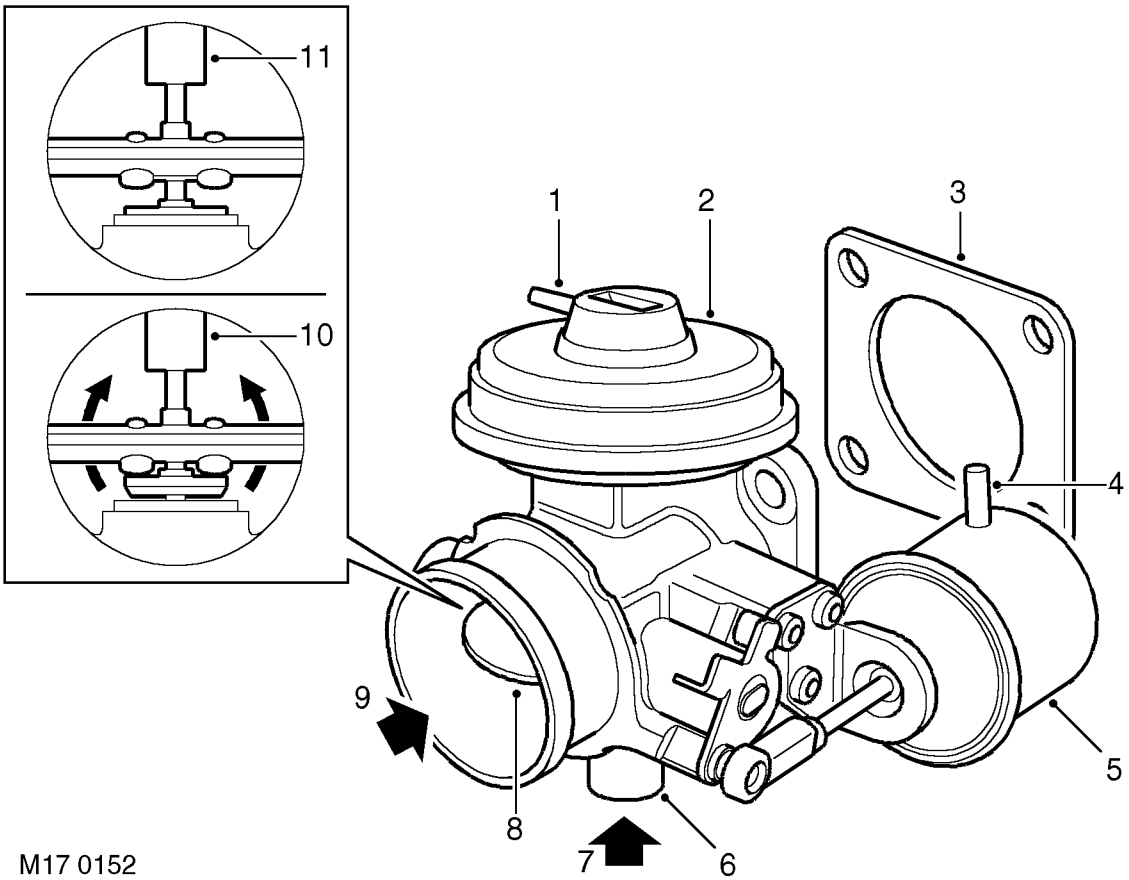

1. EGR valve vacuum port
2. EGR valve assembly
3. Gasket - EGR valve to inlet manifold
4. ILT valve vacuum port
5. ILT valve
6. EGR pipe connection
7. Exhaust gas intake
8. ILT valve - butterfly
9. Intake air
10. EGR valve open (vacuum applied to EGR valve; ILT valve butterfly shown fully open)
11. EGR valve closed (no vacuum to EGR valve; ILT butterfly valve shown fully open)

The ILT valve is used on certain exhaust gas recirculation systems in addition to the standard EGR valve described above. The ILT valve assembly is mounted at right angles to the EGR valve on the left hand side of the EGR valve assembly. It is fixed to the EGR valve assembly by three screws.

A vacuum port on top of the ILT valve connects to the ILT modulator though a blue, small-bore suction hose. When a vacuum is applied to the inlet throttle (ILT) valve suction port, a butterfly valve in the inlet manifold closes via a spindle and lever mechanism, limiting the supply of fresh intercooled air and creating a depression in the intake manifold which in turn causes a greater suction at the open port to the EGR delivery pipe. When the vacuum source is removed from the ILT valve suction port, a spring returns the butterfly to its fully open position. The ILT valve and EGR valve are operated in conjunction to control the proportional masses of fresh intake air and recirculated exhaust gas that is allowed to flow through to the inlet manifold.

The EGR valve and ILT valve should be replaced as a single assembly.

IN-LINE AIR FILTER - PRE EUú MODELS

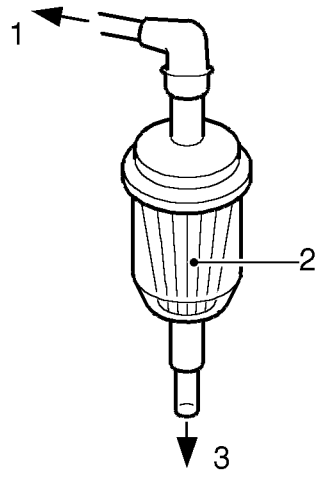

1. To modulator vent port
2. Filter element
3. To atmosphere

The in-line air filter is placed in the ventilation line from the EGR modulator. The modulator needs to be able to vent to atmosphere in order to release the vacuum supplied to the EGR valve. The filter prevents contamination entering the modulator via the vent port which could cause failure. The filter should be periodically changed in accordance with the recommended service intervals. The filter is attached to the RH inner front wing, and is held in position by a clamping bracket. The filter must be mounted vertically.

NOTE: EU3 models are not fitted with an in-line air filter. The ventilation line connects directly to the air cleaner housing, where it vents to atmosphere.

EGR SYSTEMS

There are two types of exhaust gas recirculation system used with the Td5 engine dependent on legislation and market requirements, these are type 1 and type 2.

Type 1 EGR system is fitted to all Td5's built up to the introduction of 2002 MY, except for Japanese specification vehicles.

Type 2 EGR system is fitted to all Japanese specification vehicles and was introduced into European markets for 2002 MY to meet EU3 emission requirements. An additional feature introduced at 2002 MY is the EGR cooler, which is bolted to the front of the cylinder head.

EGR System - Type 1

This EGR system features a modulator which is electrically controlled to modulate a vacuum source to the EGR valve. The controlled vacuum opens the valve by the amount required to ensure the optimal proportion of exhaust gas is allowed through to the inlet manifold to be combined with the fresh air intake. Control feedback is achieved by monitoring the mass of fresh air flowing through the MAF sensor.

EGR modulator operation is controlled by a signal from the ECM, which determines the required amount of EGR needed in response to inputs relating to air flow and engine operating and ambient conditions. The ECM is low-side driven, sinking current returned from the vacuum modulator for switching operating condition.

The exhaust gases are routed from the exhaust manifold through a shaped metal pipe which connects to the underside of the EGR valve. The pipe is held securely in position to the front of the cylinder head using a clamp bracket. The EGR pipe is attached to a mating port at the front end of the exhaust manifold using 2 Allen screws, and at the EGR valve assembly by a metal band clamp. The 2 Allen screws should be replaced every time the EGR pipe is removed.

CAUTION: Extreme caution should be exercised when removing and refitting the EGR pipe to avoid damage.

When a vacuum is applied to the EGR suction port, it causes a spindle with sealing disc (EGR valve) to be raised, thus opening the port at the EGR pipe to allow the recirculated exhaust gas to pass through into the inlet manifold. The valve is spring loaded so that when the vacuum is removed from the suction port the valve returns to its rest position to tightly close the exhaust gas port.

By controlling the quantity of recirculated exhaust gas available in the inlet manifold, the optimum mix for the prevailing engine operating conditions can be maintained. This ensures the intake gas to the combustion chambers will have burning rate properties which will reduce NO_X emissions to an acceptable level. Normally, full recirculation is only applicable when NO_X emissions are most prevalent.

EGR System - Type 2

This system features twin modulators mounted one above the other on a metal plate located on the inner wing at the RH side of the engine. The modulators are electrically controlled by the engine management system and are used to modulate a vacuum source to the EGR valve and a supplementary Inlet Throttle (ILT) valve; the two valves are controlled to operate in tandem. The ILT valve vacuum pot is mounted adjacent to the EGR valve housing and has a linkage which connects to a butterfly valve mounted in front of the EGR valve at the air intake manifold.

The modulator operations are electrically controlled by signals from the engine management system which determines the required volume of exhaust gas needed in response to inputs relating to air flow, engine operating conditions and ambient parameters such as temperature and altitude. The engine management ECM switches on the circuit by completing the path to ground, operating the vacuum modulators.

Pre EU3 models: The exhaust gases are routed from the exhaust manifold through a shaped metal pipe which connects to the underside of the EGR valve. The pipe is held securely in position to the front of the engine cylinder head using a metal clamp bracket. The EGR pipe is attached to a mating port at the front end of the exhaust manifold using two Allen screws and at the EGR valve assembly by a metal band clamp. The two Allen screws fixing the EGR pipe to the exhaust manifold should be replaced every time the EGR pipe is removed.

CAUTION: Extreme care should be exercised when removing and refitting the EGR pipe to avoid damage.

EU3 models: The exhaust gases are routed from the exhaust manifold through the EGR cooler to the underside of the EGR valve. The EGR cooler is bolted to the front of the engine cylinder head. An EGR pipe connects the EGR cooler to the exhaust manifold and is secured by two Allen screws. The two Allen screws fixing the EGR pipe to the exhaust manifold should be replaced every time the EGR pipe is removed. A second pipe connects the EGR cooler to the EGR valve; this pipe is secured to the EGR valve by a clip, and to the cooler by two Allen screws.

CAUTION: Extreme care should be exercised when removing and refitting the EGR pipe to avoid damage. When refitting the EGR cooler, always tighten the pipe connections BEFORE tightening the bolts securing the cooler to the cylinder head.

When a vacuum is applied to the EGR suction port, it causes a spindle with sealing disc (EGR valve) to be raised, opening the port at the EGR pipe to allow the recirculated exhaust gas to pass through into the inlet manifold. The valve is spring loaded so that when the vacuum is removed from the suction port, the valve returns to its rest position to tightly close the exhaust gas port.

A vacuum is simultaneously applied to the inlet throttle (ILT) valve suction port which causes the butterfly valve in the inlet manifold to close by means of a spindle and lever mechanism. Closing the butterfly valve limits the supply of fresh intercooled air entering the inlet manifold and causes a depression within the inlet manifold to create a greater suction at the open port to the EGR delivery pipe. In this condition a greater mass of recirculated exhaust gas is drawn into the inlet manifold for use in the combustion process. When the vacuum is released from the ILT valve suction port a spring returns the butterfly valve to its fully open position.

By controlling the quantities of recirculated exhaust gas and fresh intake air available in the inlet manifold, the optimum mix for the prevailing engine operating conditions can be maintained which ensures the intake gas to the combustion chambers will have burning rate properties which will reduce the NO_2 emissions to an acceptable level. Normally, full recirculation is only applicable when the NO_2 emissions are most prevalent.

VALVE - EGR - NON EU3 MODELS

Service repair no - 17.45.01

Remove

1. Disconnect battery negative lead.
2. Remove 3 bolts and remove engine acoustic cover.
3. Remove cooling fan. ***See COOLING SYSTEM, Repair.***
4. Remove battery cover.
5. Disconnect battery negative lead.

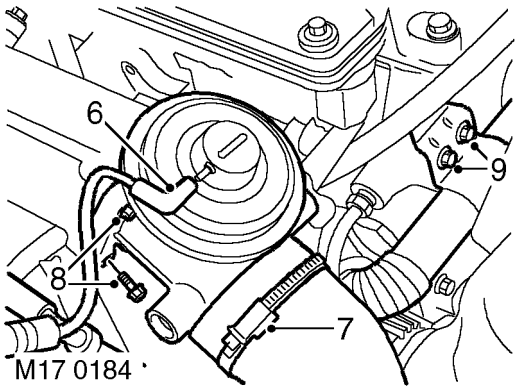

6. Disconnect vacuum hose from EGR valve
7. Loosen clip screw and release air intake from EGR valve.
8. Remove 4 bolts, release EGR valve from inlet manifold and discard gasket.
9. Remove 2 bolts and release EGR valve clip from cylinder head.

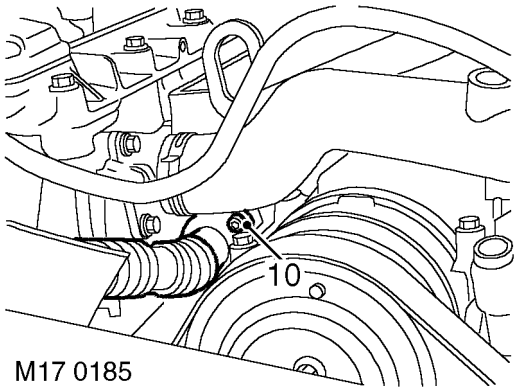

10. Remove and discard 2 Allen screws securing EGR valve pipe to exhaust manifold.
11. Remove EGR valve assembly.
12. Remove clip and remove pipe from EGR valve.

Refit

13. Clean EGR valve and mating face on pipe.
14. Position pipe to EGR valve, fit retaining clip and finger tighten bolt.
15. Clean inlet manifold face.
16. Position EGR valve to inlet manifold using new gasket and tighten bolts to ***10 Nm (7lbf.ft).***
17. Position air intake hose and tighten clip screw.
18. Position EGR pipe bracket, fit bolts and finger tighten.
19. Position EGR valve pipe to exhaust manifold and finger tighten allen screws
20. Tighten EGR valve clip to ***5 Nm (3 lbf.ft).***
21. Tighten EGR pipe bracket bolts to ***10 Nm (7 lbf.ft).***
22. Tighten 2 Allen screws to ***10 Nm (7 lbf.ft).***
23. Connect vacuum hose to EGR valve.
24. Fit cooling fan. ***See COOLING SYSTEM, Repair.***
25. Fit engine acoustic cover.
26. Reconnect battery negative lead.
27. Fit battery cover.

VALVE - EGR - EU3 MODELS

Service repair no - 17.45.01

Remove

1. Release turnbuckles and remove battery cover.
2. Disconnect battery earth lead.
3. Remove 3 bolts and remove engine acoustic cover.
4. Remove cooling fan coupling. ***See COOLING SYSTEM, Repair.***

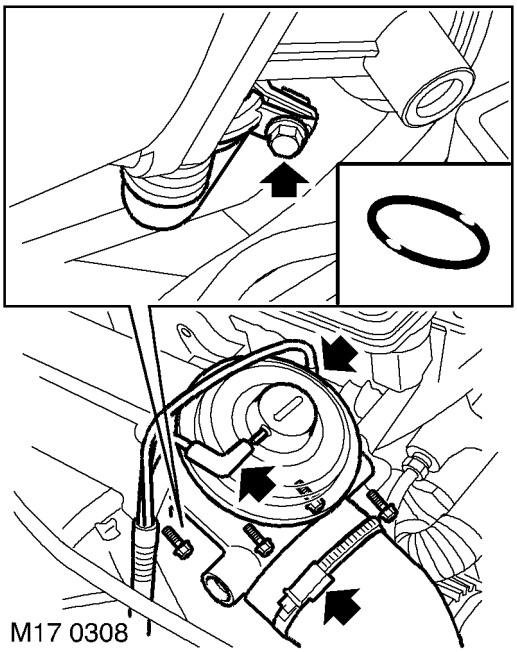

5. Disconnect vacuum hose(s) from EGR valve.
6. Loosen screw and disconnect air intake hose from EGR valve.
7. Remove screw and remove clamp securing EGR pipe to EGR valve.
8. Remove 4 bolts securing EGR valve, remove valve and discard gasket.
9. Discard EGR pipe gasket.

Refit

10. Clean EGR valve and mating faces.
11. Fit new gasket to EGR pipe.
12. Using new gasket, position EGR valve to inlet manifold fit bolts and tighten to ***10 Nm (7 lbf.ft).***
13. Fit EGR pipe clamp and tighten screw to ***6 Nm (4.4 lbf.ft).***
14. Connect air intake hose to EGR valve and tighten clip.
15. Connect vacuum hoses to EGR valve.
16. Fit cooling fan coupling. ***See COOLING SYSTEM, Repair.***
17. Fit engine acoustic cover and tighten bolts to ***10 Nm (7 lbf.ft).***
18. Connect battery earth lead.
19. Fit battery cover and secure the fixings.

INLET THROTTLE (ILT) MODULATOR

Service repair no - 17.45.03

Remove

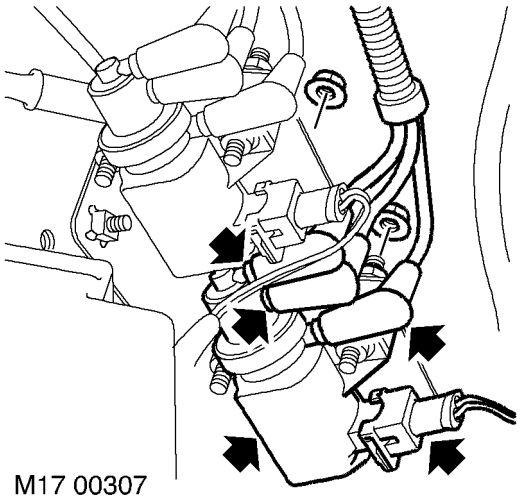

1. Identify the fitted positions of the 3 vacuum pipes, then disconnect from the ILT modulator valve.
2. Disconnect multiplug from ILT modulator.
3. Remove 2 nuts securing modulator and remove ILT modulator from its moutings.

Refit

4. Fit ILT modulator to its mountings, fit the nuts and tighten to ***10 Nm (7 lbf.ft).***
5. Connect vacuum pipes to the positions identified during removal.
6. Connect multiplug to ILT modulator.

SOLENOID - VALVE - EGR

Service repair no - 17.45.04

Remove

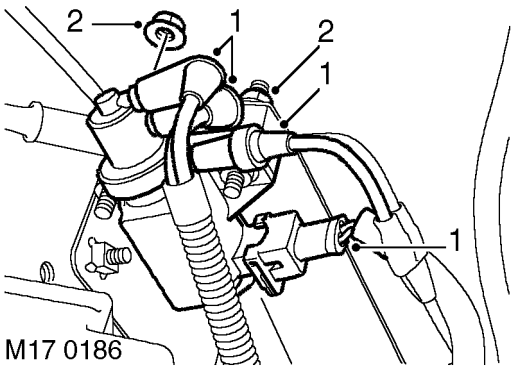

1. Disconnect vacuum pipes and multiplug from EGR solenoid.
2. Remove 2 nuts and remove EGR solenoid.

Refit

3. Position EGR solenoid and tighten securing nuts.
4. Connect vacuum hoses and multiplug.

18 - ENGINE MANAGEMENT SYSTEM

CONTENTS

Page

DESCRIPTION AND OPERATION

COMPONENT LOCATION 2
DESCRIPTION 5
ENGINE CONTROL MODULE (ECM) 6
SENSOR - MASS AIR FLOW (MAF) 7
SENSOR - AMBIENT AIR PRESSURE AND 8
SENSOR - MANIFOLD ABSOLUTE PRESSURE 9
SENSOR - ENGINE COOLANT TEMPERATURE 11
SENSOR - CRANKSHAFT SPEED AND 12
SENSOR - THROTTLE POSITION (TP) 14
SENSOR - THROTTLE POSITION (TP) 15
ELECTRONIC UNIT INJECTOR (EUI) 18
SENSOR - FUEL TEMPERATURE (FT) 20
RELAY - FUEL PUMP 21
RELAY - MAIN 21
SWITCH - BRAKE PEDAL 22
SWITCH - CLUTCH PEDAL 22
MODULATOR - EXHAUST GAS REGULATOR (EGR) 23
WARNING LAMP - GLOW PLUG 23
GLOW PLUGS 24
TURBOCHARGER 26
INTERCOOLER 27
OPERATION 28

REPAIR

ENGINE CONTROL MODULE (ECM) 1
SENSOR - ENGINE COOLANT TEMPERATURE (ECT) 1
SENSOR - CRANKSHAFT SPEED AND POSITION (CKP) 2

This page is intentionally left blank

COMPONENT LOCATION

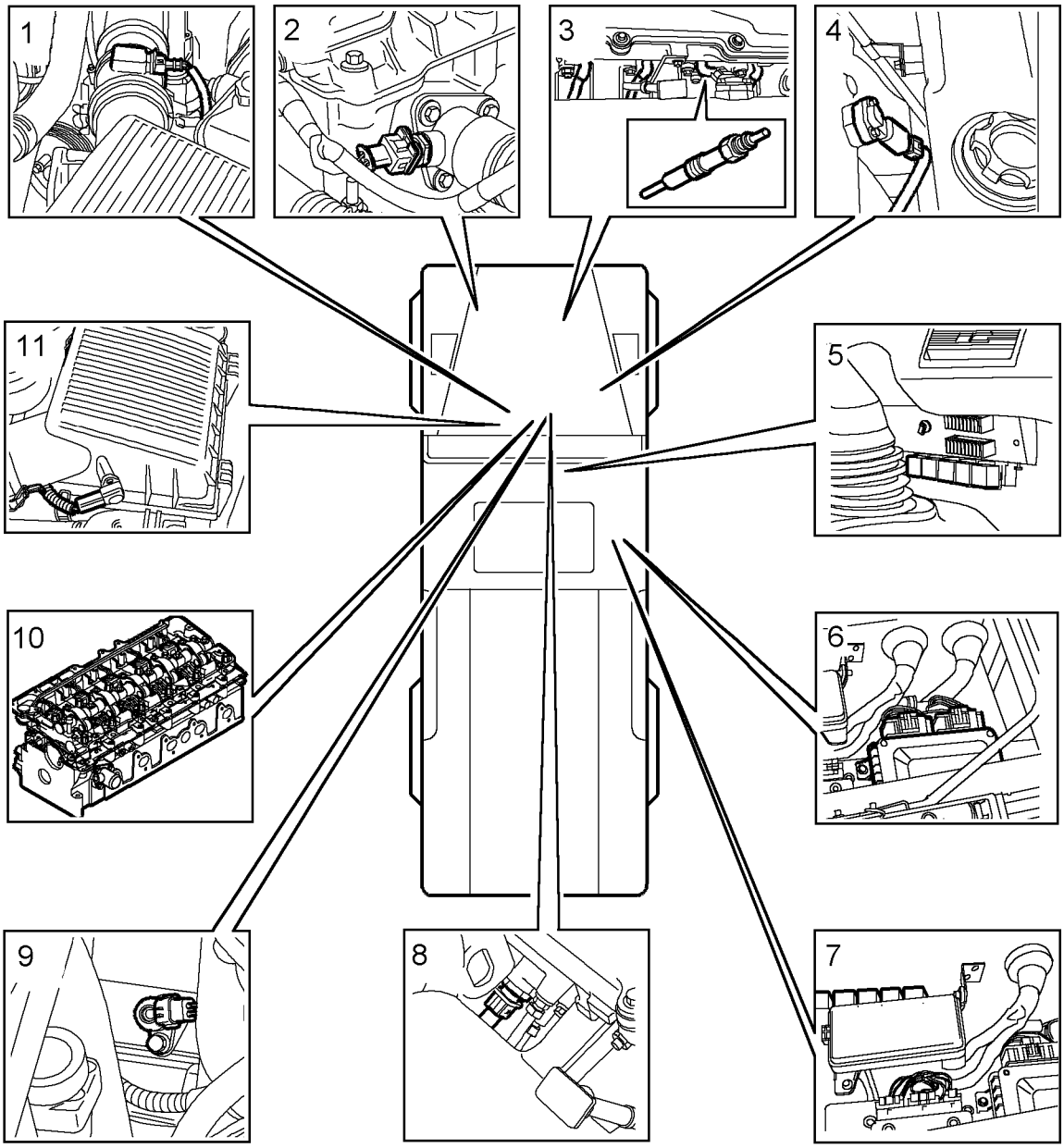

M18 0356

1. Mass Air Flow (MAF) sensor.
2. Engine Coolant Temperature (ECT) sensor.
3. Glow plugs.
4. Manifold Absolute Pressure (MAP) / Inlet Air Temperature (IAT) sensor.
5. Fuel pump relay.
6. Engine Control Module (ECM).
7. Air Conditioning (A/C) and cooling fan relay.
8. Fuel Temperature (FT) sensor.
9. Crankshaft Speed and Position (CKP) sensor.
10. Electronic Unit Injectors (EUI).
11. Ambient Air Pressure (AAP) sensor.

Passenger Compartment

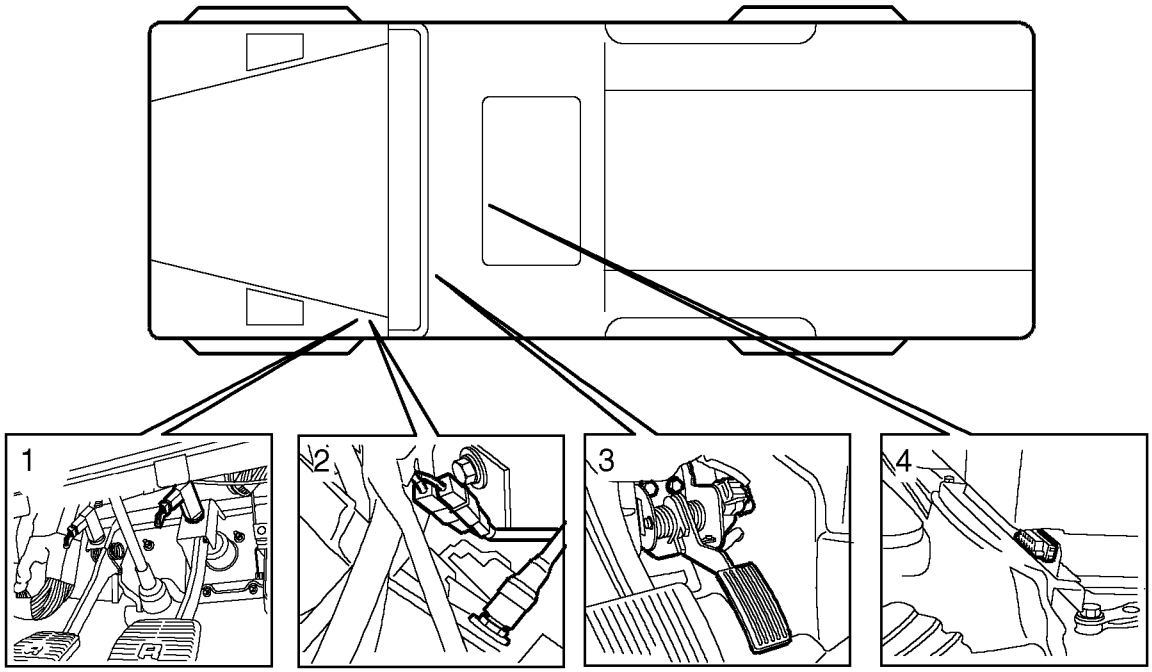

M18 0357

1. Brake pedal switch.
2. Clutch pedal switch.
3. Accelerator pedal switch.
4. Diagnostic connector.

DESCRIPTION

General

An engine control module (ECM) controls the five cylinder direct injection diesel engine, and works on the drive by wire principal. This means there is no throttle cable, the ECM controls the drivers needs via a signal from the Throttle Position (TP) sensor on the throttle pedal.

The ECM is a full authoritative diesel specific microprocessor that also incorporates features for air conditioning. In addition, the ECM supplies output control for the Exhaust Gas Recirculation (EGR) and turbocharger boost pressure. The ECM has a self diagnostic function, which is able to provide backup strategies for most sensor failures.

The ECM processes information from the following input sources:

- Mass Air Flow (MAF) sensor.
- Ambient Air Pressure (AAP) sensor.
- Manifold Absolute Pressure (MAP) / Inlet Air Temperature (IAT) sensor.
- Engine Coolant Temperature (ECT) sensor.
- Crankshaft Speed and Position (CKP) sensor.
- Throttle Position (TP) sensor.
- Fuel Temperature (FT) sensor.
- Air conditioning request.
- Air conditioning fan request.
- Brake pedal switch.
- Clutch pedal switch.

The input from the sensors constantly updates the ECM with the current operating condition of the engine. Once the ECM has compared current information with stored information within its memory, it can make any adjustment it requires to the operation of the engine via the following:

- Air conditioning clutch relay.
- Air conditioning cooling fan relay.
- Electronic vacuum regulator solenoid.
- Fuel pump relay.
- Glow plug warning lamp.
- Glow plugs.
- Fuel injectors.
- Main relay.
- Turbocharger wastegate modulator.
- Temperature gauge.

The ECM interfaces with the following:

- Serial communication link.
- Instrument pack.

ENGINE CONTROL MODULE (ECM)

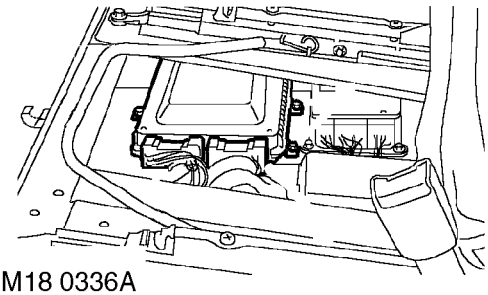

M18 0336A

The ECM is made from aluminium alloy and is located under the RH front seat. The ECM has an interface of 72 pins via two connectors providing both input information and output control. The ECM receives information from the sensors to inform it of the current state of the engine. The ECM then refers this information to stored values in its memory and makes any changes to the operation of the engine necessary via the actuators. This is a rolling process and is called adaptive strategy. By using this adaptive strategy the ECM is able to control the engine to give optimum driveability throughout all operating conditions. There is no ECM self test, although the ECM saves driveability data from the last journey. Power down of the ECM can take between 10 seconds and 10 minutes dependent on coolant temperature.

SENSOR - MASS AIR FLOW (MAF)

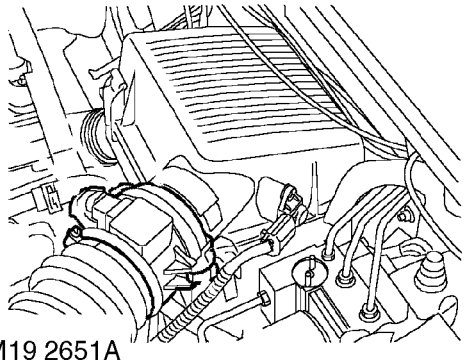

M19 2651A

The MAF sensor is located in the intake system between the air filter housing and the turbocharger. The ECM uses the information generated by the MAF sensor to control exhaust gas recirculation (EGR).

The MAF sensor works on the hot film principal. The MAF sensor has 2 sensing elements contained within a film. One element is controlled at ambient temperature e.g. 25 °C (77 °F) while the other is heated to 200 °C (360 °F) above this temperature e.g. 225 °C (437 °F). As air passes through the MAF sensor the hot film will be cooled. The current required to keep the constant 200 °C (360 °F) difference provides a precise although non-linear signal of the air drawn into the engine. The MAF sensor sends a voltage of between 0 and 5 volts to the ECM, proportional to the mass of the incoming air. This calculation allows the ECM to set the EGR ratio for varying operating conditions.

Inputs / Outputs
The MAF sensor receives battery voltage (C0149-3) via the ECM on a brown/orange wire. Signal output on a slate/light green wire from the MAF sensor (C0149-2) to the ECM (C0158-11) is a variable voltage proportional to the air drawn into the engine. The MAF sensor is provided an earth (C0149-1) via the ECM (C0158-20) on a pink/black wire.

The MAF sensor can fail or supply an incorrect signal if one or more of the following occurs:
- Sensor open circuit.
- Short circuit to vehicle supply.
- Short circuit to vehicle earth.
- Contaminated sensor element.
- Damaged sensor element.
- Damaged wiring harness.
- MAF sensor supplies incorrect signal (due to air leak or air inlet restriction).

In the event of a MAF sensor signal failure any of the following symptoms my be observed:
- During driving, engine speed may dip before recovering.
- Difficult starting.
- Engine stalls after starting.
- Delayed throttle response.
- EGR inoperative.
- Reduced engine performance.
- MAF signal out of parameters.

In the event of a MAF sensor failure, the ECM will use a fixed default value from its memory.

SENSOR - AMBIENT AIR PRESSURE AND TEMPERATURE (AAP)

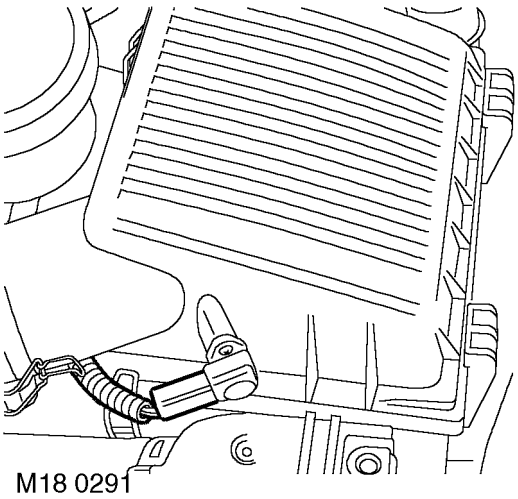

The AAP sensor is located in the top of the air filter housing. It provides a voltage signal relative to ambient air pressure to the ECM. The AAP sensor works on the piezo crystal principal. Piezo crystals are pressure sensitive and will oscillate in accordance to changes in air pressure. The AAP sensor produces a voltage between 0 and 5 volts proportional to the pressure level of the air in the air filter housing. A reading of 0 volts indicates low pressure and a reading of 5 volts a high pressure. The ECM uses this signal for the following functions.

- To maintain manifold boost pressure.
- To reduce exhaust smoke emissions while driving at high altitudes.
- Control of the EGR system.

Inputs / Outputs

The ECM (C0158-8) supplies the AAP sensor (C0188-3) with a 5 volt feed on a pink/purple wire. The output signal from the AAP sensor (C0188-2) is sent to the ECM (C0158-10) on a white/yellow wire. The AAP sensor is earthed (C0188-1) via the ECM (C0158-30) on a pink/black wire.

The AAP sensor can fail, or supply an incorrect signal if one or more of the following occurs:

- Sensor open circuit.
- Short circuit to vehicle supply.
- Short circuit to vehicle earth.
- Contaminated sensor element.
- Damaged sensor element.
- Resistance in wiring harness.

In the event of an AAP sensor signal failure, any of the following symptoms may be observed:

- Altitude compensation inoperative (engine will produce black smoke).
- Active boost control inoperative.
- Turbocharger boost pressure limited to 1 bar (14.5 lbf.in^2).
- EGR altitude compensation inoperative.

In the event of a AAP sensor failure, the ECM will use a fixed default value from its memory.

SENSOR - MANIFOLD ABSOLUTE PRESSURE (MAP) / INLET AIR TEMPERATURE (IAT)

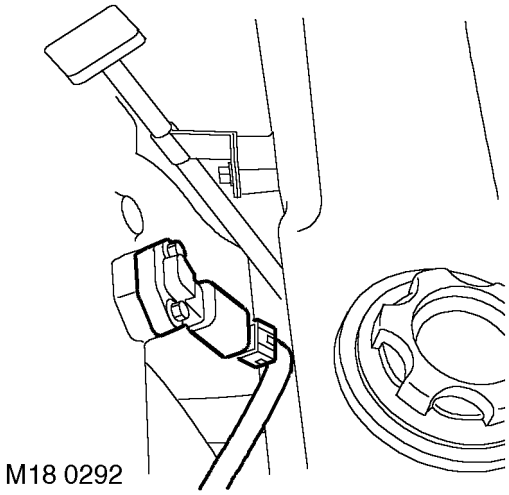

The MAP/IAT sensors are combined in one unit located in the inlet manifold. It provides pressure and temperature information about the air in the inlet manifold to the ECM. The ECM compares the voltage signal to stored values and compensates fuel delivery as necessary. The ECM uses the signal from the MAP/IAT sensor for the following functions:

- To calculate the delivered fuel limits.
- To calculate the air mass in the cylinder.
- To calculate the air speed density.
- To calculate the air temperature.

The MAP sensor works on the piezo crystal principal. Piezo crystals are pressure sensitive and will oscillate in accordance to changes in air pressure. The MAP sensor produces a voltage between 0 and 5 volts proportional to the pressure level of the air in the inlet manifold. A reading of 0 volts indicates a low pressure, a reading of 5 volts a high pressure.

The IAT portion of the sensor works as a Negative Temperature Co-efficient (NTC) sensor. As air temperature rises, the resistance in the sensor decreases. As temperature decreases the resistance in the sensor increases. The ECM compares the voltage signal to stored values and compensates fuel delivery as necessary.

Inputs / Outputs

The MAP/IAT sensor (C0567-3) is provided a 5 volt supply by the ECM (C0158-8) on a pink/purple wire. The MAP/IAT sensor provides the ECM with 2 outputs. The MAP sensor output (C0567-4) is connected to the ECM (C0158-6) by a white/yellow wire. The IAT sensor output (C0567-2) is connected to the ECM (C0158-34) on a green/black wire. The MAP/IAT sensor is earthed (C0567-1) via the ECM (C0158-17) on a pink/black wire.

The MAP/IAT sensor can fail, or supply an incorrect signal if one or more of the following occur:
- Sensor open circuit.
- Short circuit to vehicle supply.
- Short circuit to vehicle earth.
- Contaminated sensor element.
- Damaged sensor element.
- Resistance in wiring harness.

In the event of a MAP/IAT sensor failure any of the following symptoms may be observed:
- If the MAP sensor fails manifold pressure is set to a pre-determined default value and the engine performance will be reduced.
- If the IAT sensor fails the ECM will set air temperature to a fixed value. The ECM will use a fixed default value from its memory.

SENSOR - ENGINE COOLANT TEMPERATURE (ECT)

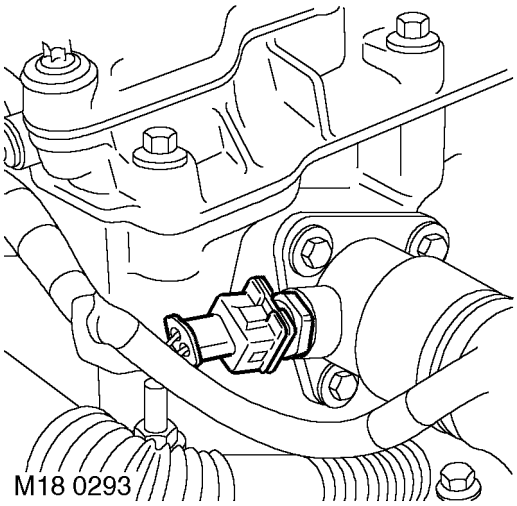

The ECT sensor is located in the coolant outlet elbow on top of the engine. It provides the ECM with engine coolant temperature information. The ECM uses this information for the following functions:

- Fuelling calculations.
- Temperature gauge.
- To limit engine operation if coolant temperature is to high.
- Cooling fan operation.
- Glow plug operating time.

The ECT works as an NTC sensor. As temperature rises, the resistance in the sensor decreases, as temperature decreases, the resistance in the sensor increases. The ECM compares the voltage signal to stored values and compensates fuel delivery to ensure optimum driveability at all times.

Inputs / Outputs

The ECT sensor (C0169-2) is provided a feed by the ECM (C0158-7) on a pink/green wire. The sensor is provided an earth path (C0169-1) via the ECM (C0158-18) on a pink/black wire.

The ECT can fail or supply an incorrect signal if one or more of the following occurs:

- Sensor open circuit.
- Short circuit to vehicle supply.
- Short circuit to vehicle earth.
- Incorrect mechanical fitting.
- Signal fixed above 40 °C (104 °F) not detected.
- Signal fixed below 40 °C (104 °F) not detected.

In the event of an ECT sensor failure, any of the following symptoms may be observed:

- Difficult cold start.
- Difficult hot start.
- Driveability concerns.
- Instrument pack warning lamp illuminated.
- Temperature gauge reads excessively hot.
- Temperature gauge reads excessively cold.

In the event of a component failure the ECM calculates coolant temperature from the fuel temperature signal. If this occurs, the limit of engine operation if coolant temperature becomes too high becomes inoperative.

SENSOR - CRANKSHAFT SPEED AND POSITION (CKP)

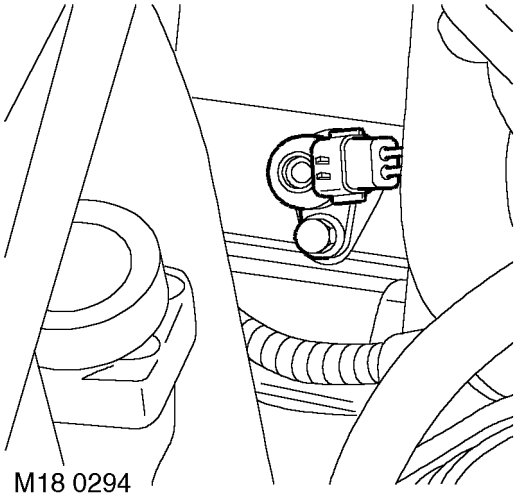

The CKP sensor is located in the transmission housing with its tip adjacent to the outer circumference of the flywheel. The CKP sensor works on the variable reluctance principal, which sends a signal back to the ECM in the form of an ac voltage.

The ECM uses the signal from the CKP sensor for the following functions.
- To calculate engine speed.
- To determine engine crank position.
- To determine fuel injection timing.

The CKP sensor works as a Variable Reluctance Sensor (VRS). It uses an electromagnet and a target ring to generate a signal. As the target ring passes the tip of the CKP sensor the magnetic field produced by the sensor is cut and then re-instated. The ECM measures the signal as an ac voltage.

The outer circumference of the flywheel acts as the target ring for the sensor. The flywheel is divided into 36 segments, each of 10°. 31 segments have drilled holes and 5 segments are spaces. This equals 360°or one engine revolution. The 5 spaces correspond to the TDC position of the 5 cylinders. This allows the ECM to control fuel injection timing for each of the cylinders.

Inputs / Outputs
The two pins of the CKP sensor (C1068-1 & C1068-2) are both outputs. The ECM (C0158-13 & C0158-36) processes the outputs of the sensor. To protect the integrity of the CKP sensor signal, an earth screen is used.

The ECM measures the outputs from the CKP sensor. The ECM (C0158-13) measures a positive signal on a pink/black wire, and a negative signal (C0158-36) on a white/blue wire. The earth path for the sensor is via the ECM (C0158-16).

Voltage generation from the CKP sensor is relative to engine speed. The values from a good CKP sensor are as follows:

- 2 to 3 volts with engine cranking.
- Rising to 6 to 6.5 volts from 1000 rev/min upwards.

The above readings are dependent upon the correct air gap between the tip of the CKP sensor and the passing teeth of the reluctor ring.

The CKP sensor can fail or supply an incorrect signal if one or more of the following occurs:

- Sensor assembly loose.
- Incorrect spacer fitted.
- Sensor open circuit.
- Sensor short circuit.
- Incorrect fitting and integrity of the sensor.
- Water ingress.

In the event of a CKP sensor signal failure, any of the following symptoms may be observed:

- Engine cranks but fails to start.
- Engine misfires (CKP sensor incorrectly fitted).
- Engine runs roughly or stalls (CKP sensor incorrectly fitted).

The CKP sensor does not have a back-up strategy. If it fails the engine will stop running and fail to start.

SENSOR - THROTTLE POSITION (TP)
UP TO VIN 607224

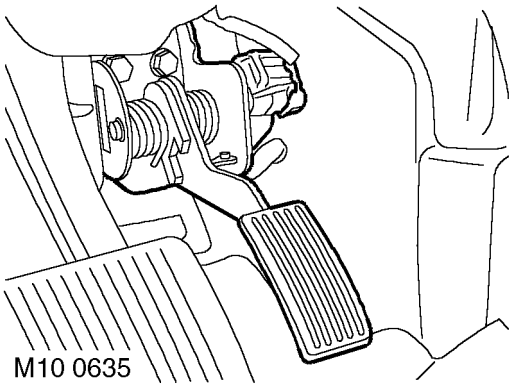

The TP sensor is located on the throttle pedal assembly. It detects throttle pedal movement and position. It uses two position sensors to provide the ECM with the exact throttle pedal position. As the pedal operates, the voltage of one position sensor increases as the other decreases.

Input / Output
The ECM (C0658-14) provides a 5 volt reference feed to both sensors (C0787-B & C0787-J) on white/purple wires via header 291. The signal output from sensor 1 (C0787-F) is connected to the ECM (C0658-12) by a white/green wire. Signal output from sensor 2 (C787-K) is connected to the ECM (C0658-36) by a white/slate wire. An earth path is provided for both sensors (C0787-B & C0787-G) on black/yellow wires via the ECM (C0658-26)

The TP sensor can fail or supply an incorrect signal if one or more of the following occurs:
- Sensor open circuit.
- Short circuit to vehicle supply.
- Short circuit to vehicle earth.
- Water ingress.
- Sensor incorrectly fitted.

In the event of a TP sensor signal failure, any of the following symptoms may be observed:
- Engine performance concern.
- Delayed throttle response.
- Failure of emission control.

If the TP sensor fails, the engine will only run at idle speed until the fault is eliminated.

SENSOR - THROTTLE POSITION (TP) FROM VIN 607225

Defender vehicles from VIN 607225 use three track thick film potentiometers. No idle speed sender switch is used on this type of sensor because the ECM can compare the two or three sets of signals to implement idle speed control and over-run fuel shut-off. The two potentiometers are known as track 1 and 2 potentiometers. The track 3 potentiometer on later models is used to improve the resolution of the pedal. The ECM provides a 5V supply and receives a signal from each of the potentiometer tracks.

Td5 TP Sensor Signal Output

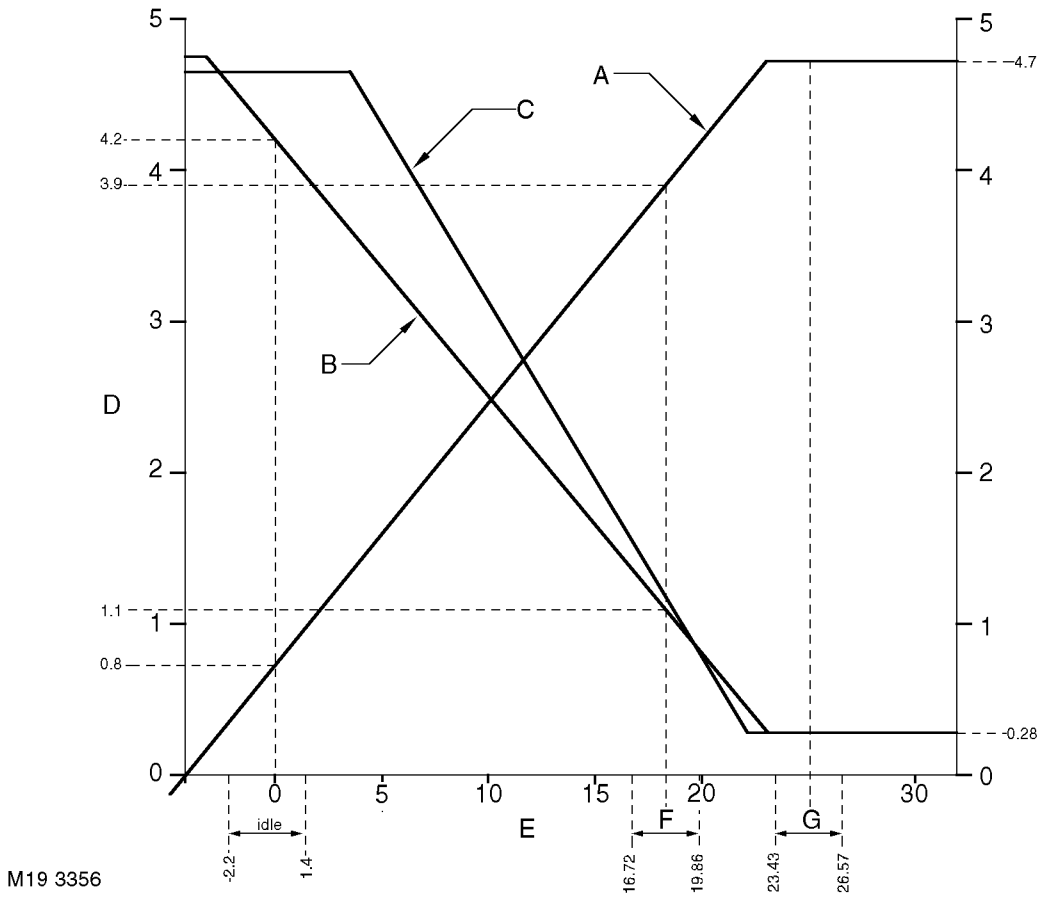

- A = Track 1
- B = Track 2
- C = Track 3
- D = Voltage
- E = Pedal Angle (Degrees)
- F = Not applicable for Defender
- G = Wide open throttle stop tolerance band

With reference to the above graph, at idle (throttle released), track 2 returns a signal of 4.2V to the ECM and track 1 returns a signal of 0.8V. The ECM calculates the sum of these two figures which totals 5.0V.

On Defender models, at wide open throttle, track 2 returns a signal of 0.28V and track 1 returns a signal of 4.7V to the ECM. The ECM calculates the sum of these two figures which totals 5.0V.

The ECM uses this strategy to error check the TP sensor signal and ensure that the requested throttle position is applied. The third potentiometer track measures the tolerance of tracks 1 and 2 and provides an improved functionality check of the pedal angle.

NOTE: Three track TP sensors cannot be fitted as replacements on vehicles previously fitted with two track TP sensors. Replacement ECM's are configured for two track TP sensors and can be fitted to all Td5 models. When replacement ECM's are fitted to vehicles using three track TP sensors, TestBook must be used to configure the ECM for three track TP sensor use.

If the TP sensor fails, the ECM will illuminate the MIL and the engine will operate at normal idle speed only.

This page is intentionally left blank

ELECTRONIC UNIT INJECTOR (EUI)

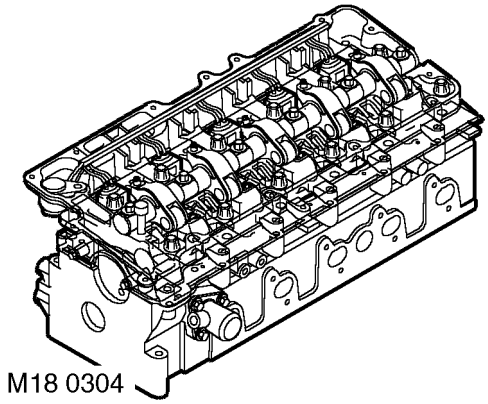

The EUI's are located in the top of the engine inside the camshaft cover. There is one EUI per cylinder. They inject finely atomised fuel directly into the combustion chamber. Each EUI has its own electrical connection, which is linked to a common harness also located under the camshaft cover. Each of the EUI's has its own 5 letter grading code. This code is used so that greater EUI precision is achieved.

Using an injection timing map within its memory and information from the CKP sensor the ECM is able to determine precise crankshaft angle. When the ECM determines the crankshaft speed and position it closes the spill valve within the EUI. Fuel pressure rises inside the EUI to a predetermined limit of 1500 bar (22,000 lbf.in^2) on pre EU3 models, and 1750 bar (25,500 lbf.in^2) on EU3 models . At this limit the pintle lifts off its seat allowing the fuel to inject into the combustion chamber. The ECM de-energises the spill valve to control the quantity of fuel delivered. This causes a rapid pressure drop within the EUI which allows the EUI return spring to re-seat the pintle, ending fuel delivery.

The electrical circuit that drives the EUI works in two stages depending on battery voltage. If battery voltage is between 9 and 16 volts the EUI's will provide normal engine performance. If however battery voltage falls to between 6 and 9 volts on pre EU3 models, EUI operation is restricted to a limit of 2100 rev/min. On EU3 models, EUI operation is restricted to idle. If the vehicle is fitted with a new ECM, the EUI grades for that specific vehicle must be downloaded to the new ECM using TestBook. In the event of the engine failing to rev above 3000 rev/min it is probable that the EUI grading has not been completed.

Input / Output
Input to the EUI takes the form of both mechanical and electrical signals. The mechanical input to the EUI is diesel fuel via the fuel pump operating at approximately 4 to 5 bar (58 to 72 lbf.in^2). Each of the EUI's is operated mechanically by an overhead camshaft to enable injection pressures of up to 1500 bar (22,000 lbf.in^2) on pre EU3 models, and 1750 bar (25,500 lbf.in^2) on EU3 models, to be achieved. The ECM controls the EUI's to ensure that fuel delivery is precise and as intended.

The EUI's earth paths are as follows:
- EUI 1 (C0522-1) via the ECM (C0158-25) on a yellow wire.
- EUI 2 (C0523-1) via the ECM (C0158-26) on a yellow/brown wire.
- EUI 3 (C0524-1) via the ECM (C0158-27) on a yellow/blue wire.
- EUI 4 (C0525-1) via the ECM (C0158-24) on a yellow/red wire.
- EUI 5 (C0526-1) via the ECM (C0158-1) on a yellow/purple wire.

The EUI can fail if one or more of the following occurs:
- Open circuit.
- Short circuit to voltage supply.
- Short circuit to vehicle earth.
- Wiring loom fault.
- Connector water ingress.
- Connector failure due to excess heat.

In the event of an EUI failure, any of the following symptoms may be observed:
- Engine misfire.
- Idle faults.
- Reduced engine performance.
- Reduced fuel economy.
- Difficult cold start.
- Difficult hot start.
- Excess smoke.

SENSOR - FUEL TEMPERATURE (FT)

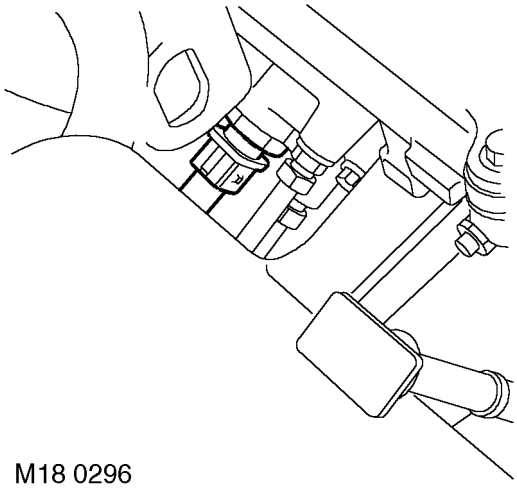

M18 0296

The FT sensor is located at the RH rear of the engine in the connector block, with the tip of the sensor inserted at least 10mm into the fuel flow. This allows the sensor to respond correctly to changes in fuel density in relation to fuel temperature.

The FT sensor works as an NTC sensor. As fuel temperature rises the resistance in the sensor decreases. As temperature decreases the resistance in the sensor increases. The ECM is able to compare the voltage signal to stored values and compensates fuel delivery as necessary for hot engine start.

The operating range of the sensor is -40 to 130 °C (-40 to 266 °F).

Input / Output
The ECM (C0158-19) provides the FT sensor (C0184-2) with a 5 volt supply signal on a yellow/white wire. The sensor is earthed (C0184-1) via the ECM (C0158-5) on a pink/black wire.

The FT sensor can fail or supply an incorrect signal if one or more of the following occurs:
- Sensor open circuit.
- Short circuit to vehicle supply.
- Short circuit to vehicle earth.
- Sensor fitted incorrectly.

In the event of an FT sensor signal failure any of the following symptoms may be observed:
- Difficult cold start.
- Difficult hot start.
- Driveability concern.

In the event of a component failure, the ECM reverts to a fixed value of 60 °C stored in its memory.

RELAY - FUEL PUMP

The fuel pump relay is located in the engine compartment fuse box. It switches on the fuel pump to draw fuel from the tank to the electronic unit injectors (EUI).

Input / Output
The fuel pump relay is a 4 pin normally open relay. The fuel pump relay (C0730-4) is provided with a feed by the main relay (C0063-78) via header 291 on a brown/orange wire. An earth path is provided for the fuel pump relay (C0730-6) via the ECM (C658-5) on a blue/purple wire. This energises the fuel pump relay and allows a feed to be provided to the fuel pump. When the ECM interrupts the earth, the relay is de-energised and the fuel pump stops operating.

The fuel pump relay can fail in one or more of the following ways:
- Relay open circuit.
- Short circuit to vehicle supply.
- Short circuit to vehicle earth.
- Broken relay return spring.

In the event of a fuel pump relay failure any of the following symptoms may be observed:
- Engine will crank but not start.
- If the engine is running, it will stop.

RELAY - MAIN

The main relay is located in the engine compartment fuse box and supplies battery voltage to the following:
- The ECM.
- The MAF sensor.
- Fuel pump relay.

Input / Output
The main relay is a 4 pin normally open relay, which must be energised to provide a voltage to the ECM. The main relay (C0063-86) is provided with an earth path via a transistor within the ECM (C0658-21) on a blue/red wire. When the earth path is completed, the relay is energised and supplies the ECM (C0658-3, C0658-22 & C0658-27) with a feed on brown/orange wires via header 291.

The main relay can fail in the following ways:
- Relay open circuit.
- Short circuit to vehicle supply.
- Short circuit to vehicle earth.
- Broken relay return spring.

In the event of a main relay failure any of the following symptoms may be observed:
- Engine will crank but not start.
- If the engine is running, it will stop.

For the ECM start up to take place the ignition feed when the switch is in position ’II’ must be greater than 6.0 volts.

SWITCH - BRAKE PEDAL

The brake pedal switch is located at the rear of the brake pedal box, and activates when the brake pedal is operated. The ECM uses the signal from the brake pedal to activate the brake lamps and to limit fuelling under braking.

The brake pedal switch can fail in any of the following ways:
- Switch open circuit.
- Short circuit to vehicle supply.
- Short circuit to earth.

SWITCH - CLUTCH PEDAL

The clutch pedal switch is located on the clutch master cylinder and is activated when the clutch pedal is operated. The ECM uses the signal from the clutch pedal switch to provide surge damping during gear change. Surge damping stops engine speed rising dramatically (engine flaring) during gear change. Surge damping assists driveability as follows:
- Smoother gear change.
- Greater exhaust gas emission control.
- Improved fuel consumption.

Input / Output
When the clutch pedal is in the rest position, the clutch switch is closed. This allows a feed to flow from the switch (C0667-1) to the ECM (C0658-35) on a black/white wire. When the clutch pedal is pressed the switch contacts open, cutting the feed to the ECM.

The clutch pedal switch can fail in any one of the following ways:
- Switch open circuit.
- Short circuit to vehicle supply.
- Short circuit to vehicle earth.

In the event of a clutch pedal switch failure surge damping will be inactive.

MODULATOR - EXHAUST GAS REGULATOR (EGR)

The EGR modulator is located on the RH side inner front wing. It regulates the vacuum source to the EGR valve allowing it to open or close. The ECM utilises the EGR modulator to control the amount of exhaust gas being recirculated in order to reduce exhaust emissions and combustion noise. Optimum EGR is usually obtained when the vehicle is operating at light throttle openings, and the vehicle is cruising at approximately 2000 to 3000 rev/min.

Input / Output
The EGR modulator (C0191-1) receives a feed from the main relay (C0063-87) on a brown/orange wire via header 294. The earth path for the modulator (C0191-2) is controlled by the ECM (C0158-3) on a blue wire. The length of time the ECM supplies an earth is how long the exhaust gases are allowed to recirculate. The ECM decides how long to supply the earth by looking at engine temperature and engine load.

The EGR modulator can fail in one or more of the following ways:
- Solenoid open circuit.
- Short circuit to vehicle supply.
- Short circuit to earth.

In the event of an EGR modulator failure, the EGR system will become inoperative.

WARNING LAMP - GLOW PLUG

The glow plug warning lamp is located in the instrument pack. It illuminates to alert the driver that the glow plugs are being heated prior to the engine being started. The length of time that the lamp illuminates and the glow plugs are operating prior to cranking is the pre-heat period. The length of time of this period is determined by the ECT sensor signal, controlled by the ECM.

GLOW PLUGS

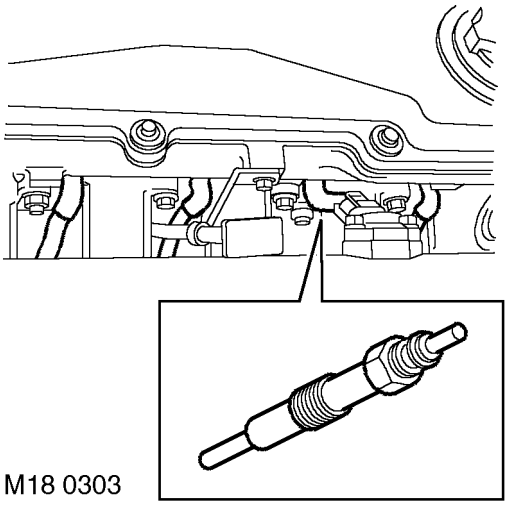

The 4 glow plugs are located in the engine block on the inlet side, in cylinders 1 to 4. Cylinder 5 has no glow plug. The glow plugs are a vital part of the engine starting strategy. The purpose of the glow plugs are:

- Assist cold engine start.
- Reduce exhaust emissions at low engine load/speed.

The main part of the glow plug is a tubular heating element that protrudes into the combustion chamber of the engine.The heating element contains a spiral filament that is encased in magnesium oxide powder. At the tip of the tubular heating element is the heater coil. Behind the heater coil and connected in series is a control coil. The control coil regulates the heater coil to ensure that it does not overheat and cause a possible failure. The glow plug circuit has its own control relay, located underneath the RH front seat.

Pre-heat is the length of time the glow plugs operate prior to engine cranking. The ECM controls the pre-heat time of the glow plugs based on battery voltage and coolant temperature information via the glow plug relay.

Post-heat is the length of time the glow plugs operate after the engine starts. The ECM controls the post-heat time based upon ECT information. If the ECT fails the ECM will operate pre-post heat time strategies with default values from its memory. In this case, the engine will be difficult to start.

Input / Output

The glow plugs receive a feed from the glow plug relay (C0215-3) on a yellow/black then individual black wires. The ECM provides the earth path for the glow plug relay (C0151-6), working in tandem with the Alarm ECU. The supply voltage heats the coils to approximately 1000 °C (1832 °F). The glow plug circuit is wired in parallel, the body of each glow plug is screwed directly into the engine block which provides each glow plug with an earth path. The glow plugs can fail in one or more of the following ways:

- Heater coil open circuit.
- Control coil open circuit.
- Poor earth quality.
- Short circuit to vehicle supply.
- Short circuit to vehicle earth.
- Harness fault.
- Relay windings open circuit.
- Incorrect relay fitted.

In the event of a glow plug failure, any of the following symptoms may be observed:

- Difficult starting.
- Excessive smoke emissions after engine start.

TURBOCHARGER

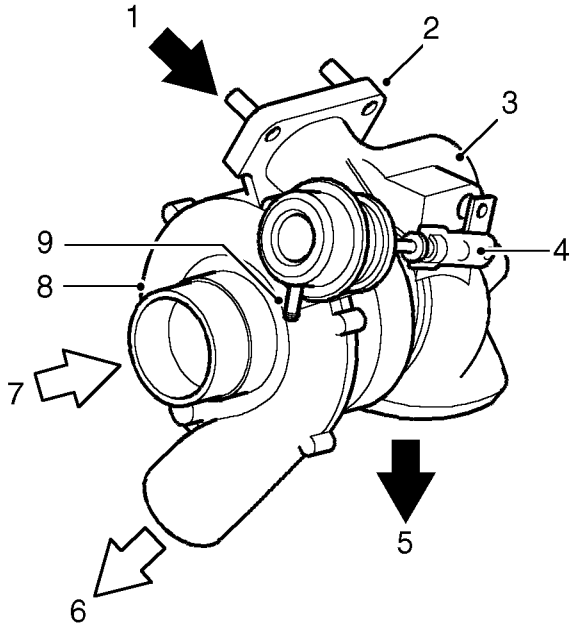

1. Exhaust gas from manifold
2. Studs to exhaust manifold
3. Turbocharger cast iron housing
4. Wastegate valve linkage
5. Exhaust gas out to front exhaust pipe
6. Compressed air intake
7. Fresh air intake
8. Turbocharger aluminium alloy housing
9. Wastegate valve vacuum port

The Td5 engine utilises a Garrett GT20 turbocharger with an electronically controlled wastegate modulator to improve engine performance. The turbocharger uses the engines exhaust gas to spin a turbine at very high speed. This causes inlet air on the other side of the turbine to be drawn in through the turbocharger intake for compression.The inlet air is carried round by the vanes of the compressor and then thrown out under centrifugal force from the turbochargers outlet duct. This compression of air enables a greater quantity of air to be delivered to the inlet manifold via an intercooler. Combustion is improved through better volumetric efficiency. The use of a turbocharger improves fuel consumption and increases engine torque and power. Exhaust noise is also reduced due to the smoothing out of exhaust pulsations.

The rear cast iron body of the turbocharger housing connects to a port on the exhaust manifold at the LH side of the cylinder head by three studs and nuts. The interface between the exhaust manifold and the turbocharger housing is separated by a metal gasket. The exhaust outlet of the turbocharger is located at the bottom of the turbocharger cast iron housing. It is connected to the exhaust system front downpipe and is attached by three studs and nuts. The interface between the turbocharger housing and the exhaust front pipe is separated by a metal gasket.

The front casing of the turbocharger is constructed from aluminium alloy and is connected to the air inlet duct by a metal band clip. The compressed air outlet is connected to the intercooler by a metal pipe which has rubber hose extensions at each end attached by metal band clips.

The turbocharger is exposed to extremely high operating temperatures (up to 1000 °C, 1832 °F) because of the hot exhaust gases and the high speed revolution of the turbine (up to 15,000 rev/min). In order to resist wear of the turbine bearings a flow of lubrication oil is supplied from the engine lubrication system to keep the bearings cool. Oil is supplied from a tapping at the front of the full-flow filter adaptor housing via a metal pipe with banjo connections. Oil is returned to the sump via a metal pipe which connects to the cylinder block at a port below the turbocharger assembly.

A heatshield is attached to the LH side of the engine to protect adjacent components from the heat generated at the turbocharger. The heatshield is attached to the engine by 2 bolts. An additional bolt attaches the heatshield to the turbocharger casting.

The ECM controls the amount of boost pressure the engine receives by way of the turbocharger. When full boost is reached a control signal is sent to the wastegate modulator, and a vacuum is applied to the wastegate valve. The wastegate valve opens, bypassing some of the exhaust gases away from the turbine to be output to the exhaust system.

The engine should be allowed to idle for 15 seconds following engine start up and before the engine is switched off to protect the turbocharger by maintaining oil supply to the turbine bearings.

INTERCOOLER

The intercooler is an air-to-air heat exchanger which lowers the intake air temperature to obtain a higher air density for better combustion efficiency. The intercooler receives compressed air from the turbocharger via a metal pipe. It cools the intake air via the intercooler matrix and delivers it to the intake manifold by means of a rubber hose which connects between the intercooler outlet and the intake manifold. The rubber hose is connected to ports at each end by metal clips.

The intercooler is located at the front of the engine bay, forward of the radiator.

OPERATION

Engine Management

The ECM controls the operation of the engine using stored information within its memory. This guarantees optimum performance from the engine in terms of torque delivery, fuel consumption and exhaust emissions in all operating conditions, while still giving optimum driveability.

The ECM will receive information from its sensors under all operating conditions, especially during:

- Cold starting.
- Hot starting.
- Idle.
- Wide open throttle.
- Acceleration.
- Adaptive strategy.
- Backup strategy for sensor failures.

The ECM receives information from various sensors to determine the current operating state of the engine. The ECM then refers this information to stored values in its memory and makes any necessary changes to optimise air/fuel mixture and fuel injection timing. The ECM controls the air/fuel mixture and fuel injection timing via the Electronic Unit Injectors (EUI), by the length of time the EUI's are to inject fuel into the cylinder. This is a rolling process and is called adaptive strategy. By using this adaptive strategy the ECM is able to control the engine to give optimum driveability under all operating conditions.

During cold start conditions the ECM uses ECT information to allow more fuel to be injected into the cylinders. This, combined with the glow plug timing strategy supplied by the ECM, facilitates good cold starting.

During hot start conditions, the ECM uses ECT and FT information to implement the optimum fuelling strategy to facilitate good hot starting.

During idle and wide open throttle conditions, the ECM uses mapped information within its memory to respond to input information from the TP sensor to implement the optimum fuelling strategy to facilitate idle and wide open throttle.

To achieve an adaptive strategy for acceleration, the ECM uses input information from the CKP sensor, the TP sensor, the ECT sensor, the MAP/IAT sensor, and the FT sensor. This is compared to mapped information within its memory to implement the optimum fuelling strategy to facilitate acceleration.

Fuel Delivery / Injection Control

The fuel delivery/injection control delivers a precise amount of finely atomised fuel to mix with the air in the combustion chamber to create a controlled explosion. To precisely control fuel delivery and control fuel injection, the following input conditions must be met:

- CKP information.
- Injection timing map information.
- FT information.
- ECT information.

The ECM monitors the conditions required for optimum combustion of fuel in the cylinder from the various sensors around the engine and then compares it against stored information. From this calculation, the ECM can adjust the quantity and timing of the fuel being delivered into the cylinder. The ECM uses CKP information as follows:

- To calculate engine speed.
- To determine engine crankshaft position.

Engine speed and crankshaft position allows the ECM to determine fuel injection timing.

The ECM also uses ECT and FT information to allow optimum fuel delivery and injection control for all engine coolant and fuel temperatures.

ENGINE CONTROL MODULE (ECM)

Service repair no - 18.30.03

Remove

1. Release fixings and remove battery cover.
2. Disconnect battery negative lead.

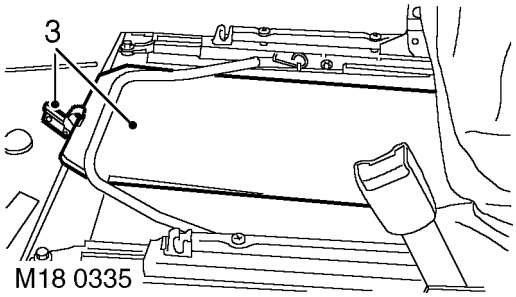

3. Remove RH seat cushion, release clip and remove ECM access panel.

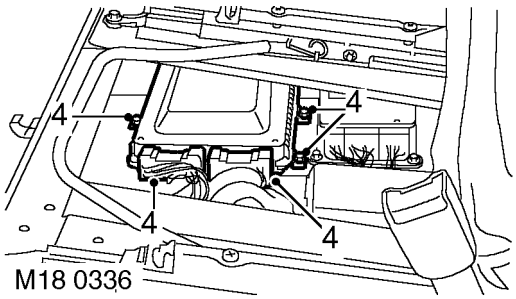

4. Remove 3 bolts, release ECM and disconnect 2 multiplugs. Remove ECM.

Refit

5. Position new ECM and connect multiplugs.
6. Fit ECM and tighten bolts.
7. Fit access panel and RH seat cushion.
8. Reconnect battery negative lead.
9. Fit battery cover and secure with fixings.

SENSOR - ENGINE COOLANT TEMPERATURE (ECT)

Service repair no - 18.30.10

Remove

1. Disconnect battery negative lead.

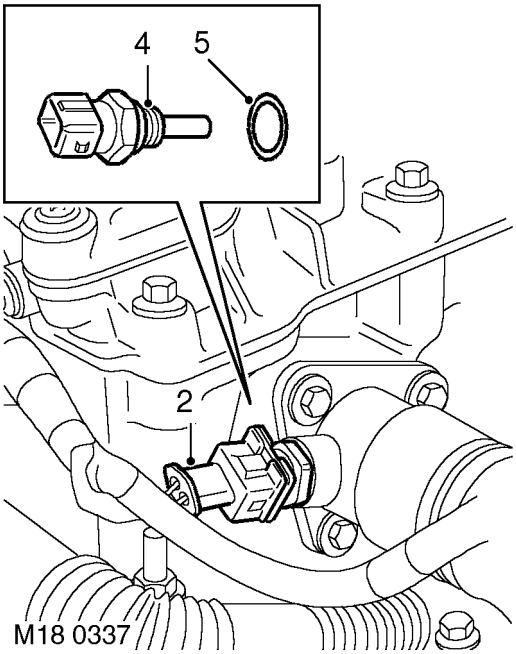

2. Remove spring clip and disconnect ECT sensor multiplug.
3. Position cloth around ECT sensor to absorb coolant spillage.
4. Remove ECT sensor.
5. Remove sealing washer and discard.

Refit

6. Clean sealing washer, sensor threads and sensor location.
7. Coat sensor threads with Loctite 577 and fit new sealing washer.
8. Fit ECT sensor and tighten to ***20 Nm (14 lbf.ft).***
9. Fit spring clip to multiplug and connect multiplug to ECT sensor.
10. Top up cooling system.
11. Run engine to normal operating temperature. Check for leaks around ECT sensor.
12. Reconnect battery negative lead.

SENSOR - CRANKSHAFT SPEED AND POSITION (CKP)

Service repair no - 18.30.12

Remove

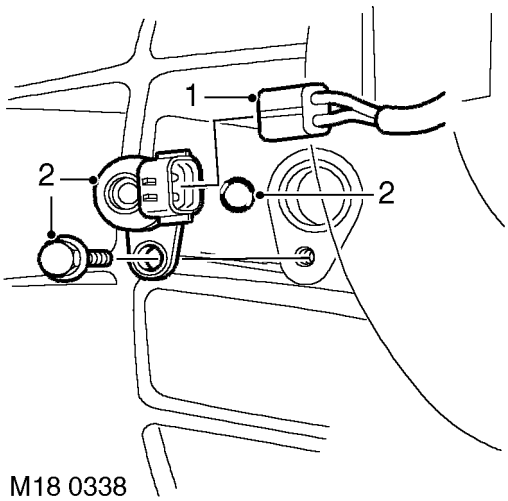

1. Disconnect CKP sensor multiplug.
2. Remove bolt, remove CKP sensor from gearbox housing and discard 'O' ring.
3. If fitted, collect spacer.

Refit

4. Clean gearbox housing and CKP sensor.
5. If fitted, refit spacer.
6. Fit new 'O' ring, position CKP sensor to gearbox housing and tighten bolt to ***10 Nm (7 lbf.ft)*** .
7. Connect sensor multiplug.

19 - FUEL SYSTEM

CONTENTS

Page

DESCRIPTION AND OPERATION

COMPONENT LOCATION 1
DESCRIPTION 2
FUEL PUMP AND FUEL GAUGE SENDER 3
FUEL PRESSURE REGULATOR 5
INJECTORS 7
FUEL FILTER 9
WATER SENSOR 10
OPERATION 11

ADJUSTMENT

HEATER PLUG TEST 1
FUEL SYSTEM - BLEED 1
FUEL TANK - DRAIN 2

REPAIR

ELEMENT - AIR FILTER 1
SENSOR - FUEL TEMPERATURE 1
SWITCH - INERTIA - FUEL CUT OFF 2
SENSOR - MASS AIR FLOW (MAF) 2
SENSOR - COMBINED MAP AND IAT 3
SENSOR - AMBIENT AIR PRESSURE (AAP) 3
ELEMENT - FUEL FILTER 4
COOLER - FUEL 4
TURBOCHARGER 5
FILTER ASSEMBLY - AIR 6
INJECTOR - SET 7
HEATER PLUGS - SET 9
INTERCOOLER 9
POTENTIOMETER - THROTTLE 10
PUMP - FUEL 10
REGULATOR - FUEL PRESSURE 11
FUEL TANK 12
NECK - FUEL TANK FILLER 14

COMPONENT LOCATION

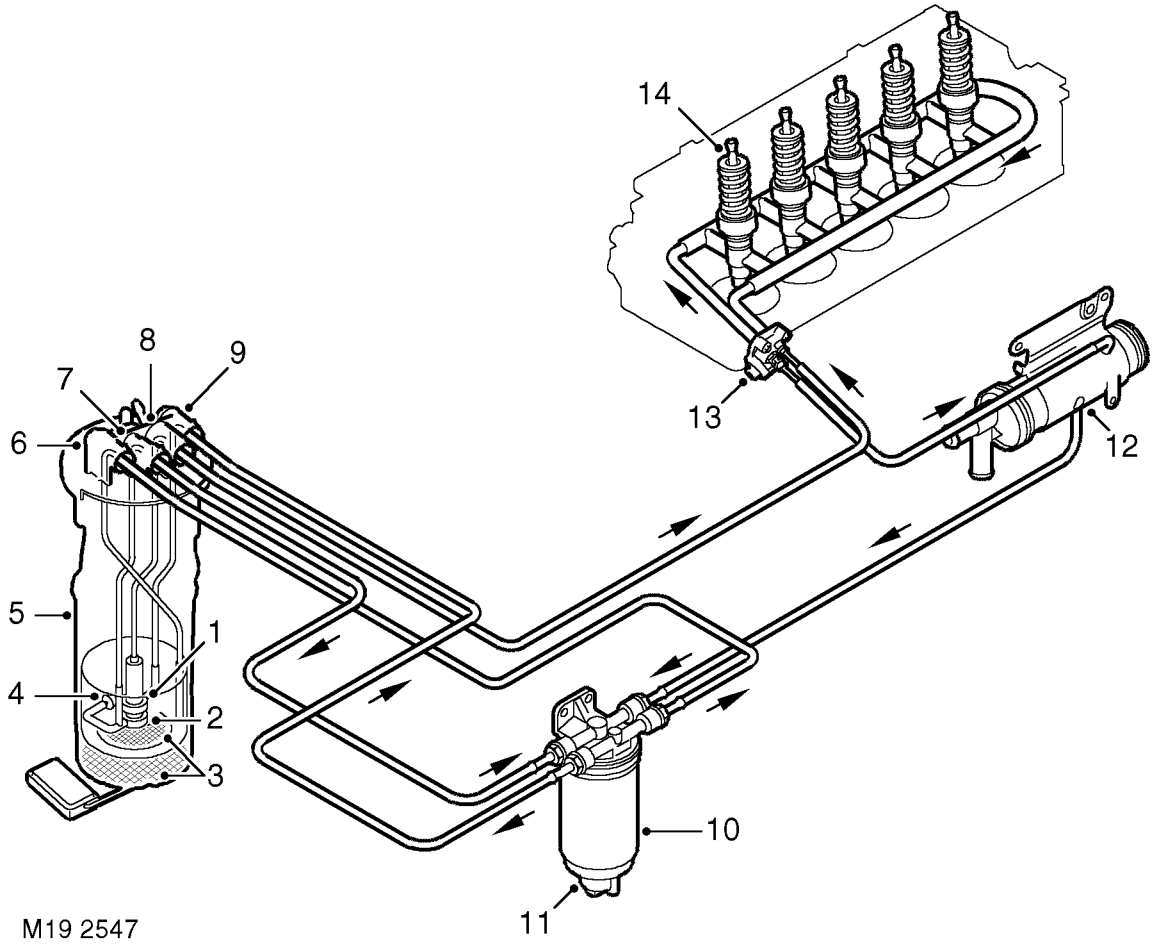

1. HP stage
2. LP stage
3. Filters
4. Jet pump
5. Fuel pump and fuel gauge sender unit
6. LP return connection
7. LP feed connection
8. HP feed connection
9. Air bleed connection
10. Fuel filter
11. Water sensor
12. Fuel cooler
13. Fuel pressure regulator
14. Electronic Unit Injectors

DESCRIPTION

General

The fuel delivery system comprises a fuel tank, fuel pump, fuel pressure regulator, five injectors and a fuel filter. The system is controlled by the ECM, which energises the fuel pump relay and controls the operation and timing of each injector solenoid.

Unlike other Diesel engines, the Td5 has no injection pump. The diesel direct injection system receives fuel at pressure from a two stage fuel pump located in the fuel tank. The system incorporates a fuel return to the fuel pump, via a fuel cooler attached to the inlet manifold, and a fuel filter. A fuel pressure regulator is located in a housing on the rear of the cylinder head. The regulator maintains the fuel delivered to the injectors at a constant pressure and returns excess fuel back to the fuel filter and pump via the fuel cooler.

A fuel filter is positioned on the chassis longitudinal, below the RH rear wheel arch. The fuel feed and return to and from the engine passes through the filter. The filter also incorporates a water sensor, which illuminates a warning lamp in the instrument pack.

A moulded fuel tank is located at the rear underside of the vehicle between the chassis longitudinals. The tank provides the attachment for the fuel pump and the fuel gauge sender unit, which is located inside the tank.

Fuel Tank and Breather

The fuel tank and breather system is a major part of the fuel delivery system. The fuel tank and breathers are located at the rear of the vehicle between the chassis longitudinals.

Fuel Tank

The moulded fuel tank is made from High Molecular Weight (HMW) High Density Polyethylene (HDPE), and is manufactured using a proportion of recycled plastic.

The tank is held in position by a metal cradle which is secured to the chassis cross members by four bolts, two holding the front of the cradle in position, two holding the rear. The fuel tank has a useable capacity of 75 litres (16.5 gallons).

An aperture in the top surface of the tank allows for the fitment of the fuel pump and fuel gauge sender unit, which is retained with a locking ring. A reflective metallic covering is attached to the tank with three scrivets to shield the tank from heat generated by the exhaust system.

Fuel Tank Breather System

The fuel tank filler tube incorporates a tank vent which allows air and fuel vapour displaced from the tank when filling to vent to atmosphere via the filler neck.

A breather spout within the tank controls the tank ’Full’ height. When fuel covers the spout it prevents fuel vapour and air from escaping from the tank. This causes the fuel to ’back-up’ in the filler tube and shuts off the filler gun. The position of the spout ensures that when the filler gun shuts off, a vapour space of approximately 10% of the tanks total capacity remains. The vapour space ensures that the Roll Over Value (ROV) is always above the fuel level and vapour can escape and allow the tank to breathe.

The ROV is welded to the top surface of the tank. It is connected by a tube to the filler tube, which in turn is connected to the atmospheric vent pipe. The ROV allows fuel vapour to pass through it during normal vehicle operation. In the event of the vehicle being overturned the valve shuts off, sealing the tank and preventing fuel from spilling from the atmospheric vent pipe.

FUEL PUMP AND FUEL GAUGE SENDER

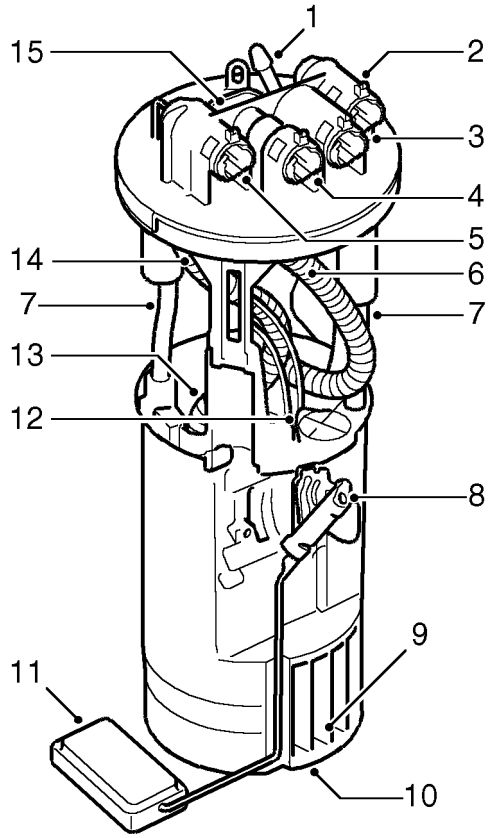

M19 2549

1. Fuel burning heater feed pipe (not used)
2. Air bleed connection (natural)
3. HP feed connection (green)
4. LP feed connection (blue)
5. LP return connection (black)
6. Pump feed pipe.
7. Spring
8. Fuel gauge sender unit
9. Swirl pot
10. Gauze filter
11. Fuel gauge sender float
12. Electrical connections
13. HP/LP two stage pump
14. Pump LP return pipe
15. Electrical connector

The fuel pump is a self priming, wet type, two stage pump, which is emersed in fuel in the tank. It operates at all times when the ignition switch is in position 'II'. If the engine is not started, the ECM will 'time-out' after three minutes and de-energise the fuel pump relay.

The fuel pump assembly is retained with a locking ring and sealed with a rubber seal. The locking ring requires a special tool for removal and refitment. The fuel gauge sender is integral with the fuel pump. The sender is submerged in the fuel and is operated by a float which moves with the fuel level in the tank.

Fuel Pump
The fuel pump assembly comprises a top cover which locates the electrical connector, and four fuel pipe couplings. The top cover is attached to a plastic cup shaped housing and retained on three sliding clips. Two coil springs are located between the cover and the housing and ensure that the fuel pump remains seated positively at the bottom of the tank when installed.

The housing locates the two stage fuel pump and also the fuel gauge sender unit. The lower part of the housing is the swirl pot which maintains a constant level of fuel at the fuel pick-up. A coarse filter is located in the base of the housing and prevents the ingress of contaminants into the pump and the fuel system from the fuel being drawn into the pump. A fine filter is located in the intake to the low pressure stage to protect the pump from contaminants. Flexible pipes connect the couplings on the top cover to the pump.

A non-return valve is located in the base of the housing. When the fuel tank is full, fuel pressure keeps the valve lifted from its seat, allowing fuel to flow into the swirl pot. As the tank level reduces, the fuel pressure in the tank reduces causing the valve to close. When the valve is closed, fuel is retained in the swirl pot, ensuring that the swirl pot remains full and maintains a constant supply to the fuel pump.

The two stage pump comprises a high and low pressure stage. The low pressure stage draws fuel from the swirl pot through a filter. The low pressure stage pumps fluid at a pressure of 0.75 bar (10.9 lbf.in) and a flow of 30 litres/hour (8 US Gallons/hour) to the fuel filter. A proportion of the fuel from the low pressure stage also passes, via a restrictor, through a jet pump which keeps fuel circulating in the swirl pot. The high pressure stage draws the low pressure fuel from the fuel filter and pressurises it to a pressure of 4.0 bar (58 lbf.in). The pressurised fuel is then passed from the pump to the injectors at a flow of 180 litres/hour (47.6 US Gallons/hour). A fuel pressure regulator is located at the rear of the engine and ensures that the delivery pressure remains at 4.0 bar (58 lbf.in) by controlling the amount of fuel returning to the fuel tank.

The fuel pump has a maximum current draw of 15 Amps at 12 Volts and is supplied a feed (C0114-1) from the fuel pump relay (C0730-2) on a white/purple wire.

Fuel Gauge Sender
The fuel gauge sender unit comprises a rotary potentiometer operated by a float. The float rises and falls with the fuel level in the tank and moves the potentiometer accordingly.

A feed is supplied to the fuel gauge sender (C0114-1) by the fuel pump relay (C0730-2) on a purple/white then white/purple wire. The sender is earthed (C0114-3) on a slate/black wire via header 287. The output voltage (C0114-2) from the sender to the instrument pack (C1061-3) varies in relation to the fuel level. This output voltage is connected to the fuel gauge C1054-2). The fuel gauge receives a battery voltage input (C1054-3) on a white/green wire. This is compared with the output voltage from the potentiometer. The difference between the two voltages determines the deflection of the fuel gauge pointer.

FUEL PRESSURE REGULATOR

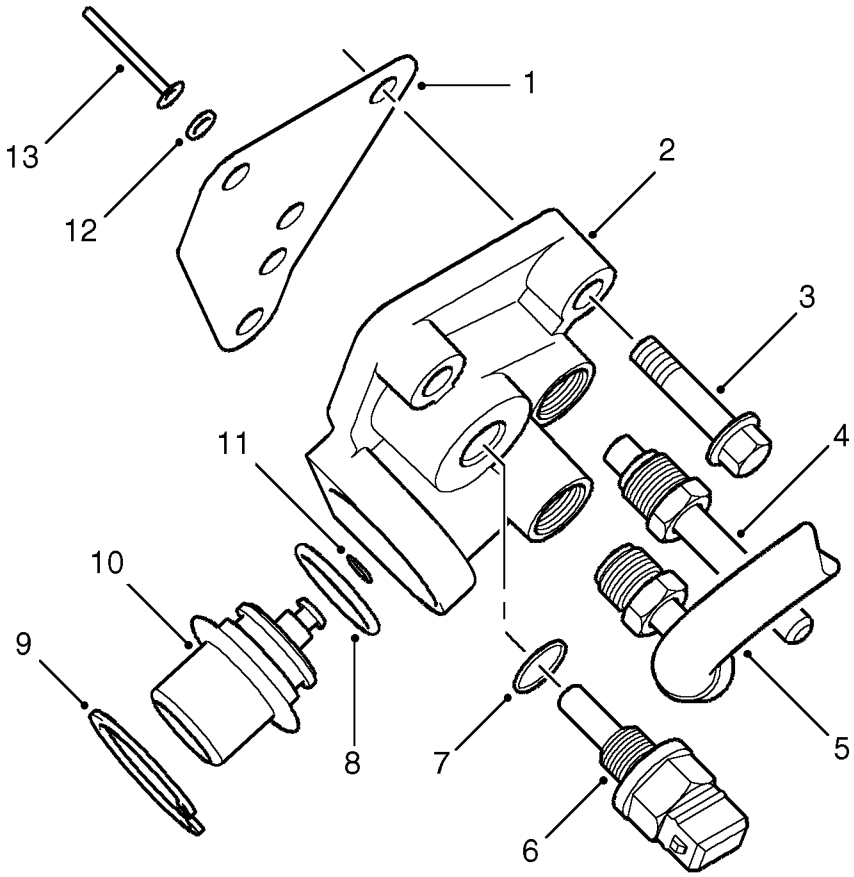

NOTE: Non EU3 Model illustrated.

1. Gasket
2. Housing
3. Bolt
4. Fuel feed union and pipe
5. Fuel return union and hose
6. Fuel temperature sensor
7. Bonded seal
8. 'O' ring
9. Circlip
10. Fuel pressure regulator
11. 'O' ring
12. 'O' ring
13. Gauze filter

The fuel pressure regulator is located in a cast alloy housing which is attached to the rear right hand corner of the cylinder head with three flanged bolts and sealed with a metal gasket. Two ports in the housing connect with ports in the cylinder head for fuel pressure feed and return. A gauze filter is located in the pressure feed port in the cylinder head, and filters the fuel before it reaches the injectors. The filter is a fit for life item but can be changed if required. An 'O' ring is located in a recess in the cylinder head and provides additional sealing for the pressure feed port between the gauze filter, the cylinder head, and the housing.

A union and pipe is attached to the feed port in the housing and connects with a quick release coupling to the fuel pressure feed pipe from the fuel pump. A second union and hose is located in the return port and provides the fuel return connection to the fuel cooler. A third port provides location for the fuel temperature sensor, which is sealed to the housing with a bonded seal. The fuel temperature sensor is used by the ECM for engine management.

The fuel pressure regulator is located in a machined port in the lower part of the housing. The regulator is sealed in the housing with two 'O' rings and secured with an internal clip.

The regulator maintains the fuel pump delivery pressure at 4 bar (58 $lbf.in^2$). When the fuel pressure exceeds 4 bar (58 $lbf.in^2$), the regulator opens and allows fuel to return to the fuel tank via the fuel cooler. The fuel returned from the regulator is directed back into the fuel filter before being drawn by the high pressure stage of the fuel pump and directed back to the injectors. A special tool can be attached to the regulator housing fuel feed port and allows for the fitment of a suitable gauge to measure fuel pump delivery pressure.

INJECTORS

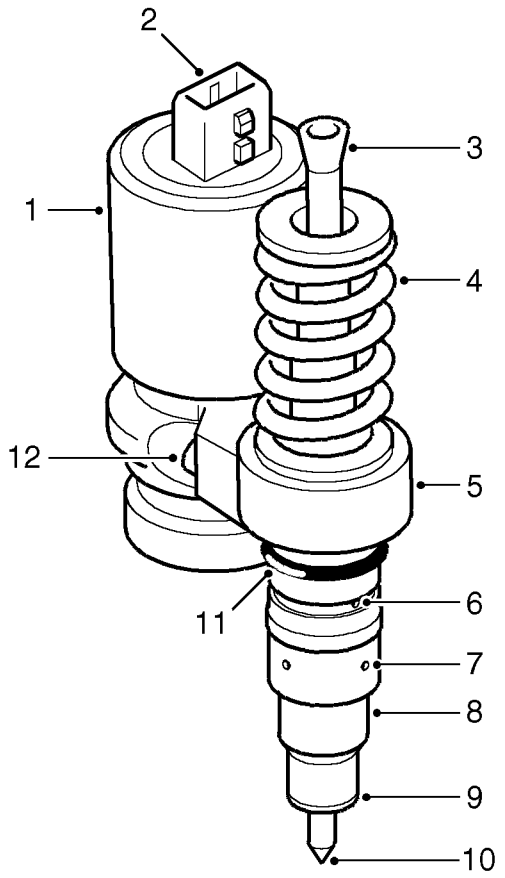

1. Solenoid housing
2. Electrical connector
3. Push rod socket
4. Push rod return spring
5. Housing
6. Fuel delivery port
7. Fuel return port
8. Nozzle cap nut
9. Copper washer
10. Nozzle
11. 'O' ring
12. Cap screw

The five injectors are located in the cylinder head adjacent the camshaft, with the nozzle of each injector protruding directly into the cylinder. Each injector is sealed into the cylinder head with a 'O' ring and copper washer and secured with a clamp and bolt.

Each injector is operated mechanically by an overhead camshaft and rocker, and electrically by a solenoid controlled by the ECM. Each injector is supplied with pressurised fuel from the pump via the regulator housing and internal drillings in the cylinder head.

The solenoid housing is secured to the injector body with two cap screws and is a sealed unit. It has a two pin electrical connector on its top face.

The injector body is machined from a forging. The body has a machined central bore which locates the push rod. A thread on the outer diameter provides the attachment for the nozzle cap nut. The body also provides attachment for the solenoid housing.

The injector push rod is operated from the rocker and cam assembly by a sprocket. The push rod is located in the housing bore and retained in its extended position by a push rod return spring. The powerful spring ensures that the push rod socket is always in contact with the rocking lever and the cam.

The lower part of the injector housing locates the spring loaded nozzle. The nozzle is retained in the housing by a nozzle cap nut which is screwed onto the housing. The nozzle cap nut has four holes around its circumference which connect to the fuel pump drilling in the cylinder head. The injector housing has ports located above the nozzle cap nut which connect with the fuel delivery drilling in the cylinder head. An 'O' ring seals the injector in the machined location in the cylinder head and a copper washer seals the injector from the combustion chamber.

The injectors are supplied with pressurised fuel from the fuel pump via the pressure regulator housing and internal drillings in the cylinder head. Each injector sprays fuel directly into the cylinder at approximately 1500 bar (22000 lbf.in) atomising the fuel and mixing it with intake air prior to combustion.

The camshaft and rocker arrangement depresses the push rod which pressurises the fuel within the injector. When the injector is required to inject fuel into the cylinder, the ECM energises the solenoid which closes a valve within the solenoid housing. The closure of the valve stops the fuel entering the return line to the pump, trapping it in the injector. The compression of the fuel by the push rod causes rapid pressurisation of the fuel which lifts the injector nozzle, forcing the fuel into the cylinder at high pressure. The ECM controls the injection timing by altering the time at which the solenoid is energised and the injection period by controlling the period for which the solenoid is energised.

FUEL FILTER

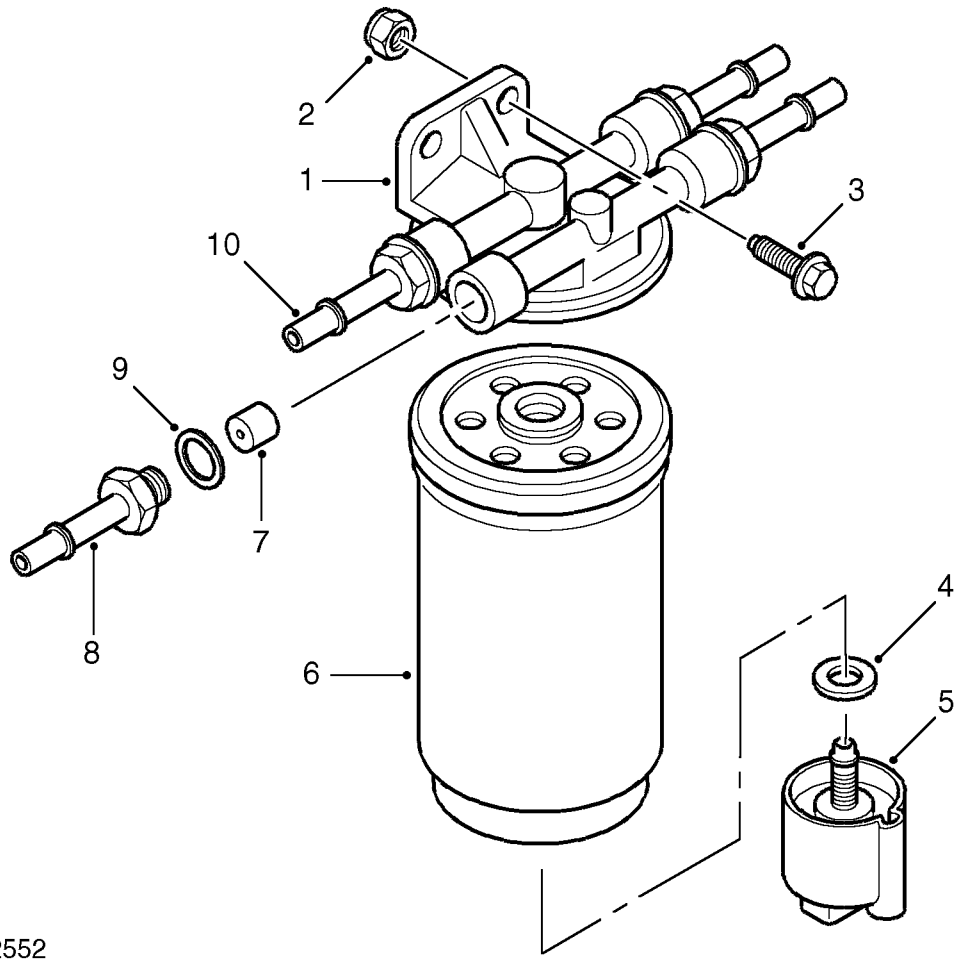

1. Filter body
2. Nut
3. Bolt
4. Rubber washer
5. Water sensor
6. Filter element
7. Air bleed valve
8. Air bleed connection
9. Copper washer
10. Connector

The fuel filter is mounted on the chassis longitudinal below the rear RH wheel arch. The filter has four quick release coupling connections; low pressure feed from the fuel pump, low pressure return to the fuel pump, return line from the fuel pressure regulator and a bleed line to the fuel pump. The fuel filter removes particulate matter from the fuel and also separates water which accumulates at the bottom of the filter.

An air bleed valve is located in the bleed line connection. The valve comprises a restrictor and a membrane. The restrictor has a small hole in its centre. This allows air and fuel to pass through the membrane. Air can pass through the membrane, but once the membrane is wet with fuel, it will not allow further fuel to pass through.

The fuel filter has a replaceable screw-on cannister type filter element which is sealed to the filter body with rubber seals. The lower part of the cannister has a screw connection for a water sensor. The filter has a flow rate of 180 litres/hour (47.6 US Gallons/hour).

WATER SENSOR

The water sensor has a three pin electrical connector. When the sensor detects water in the fuel filter it illuminates a warning lamp in the instrument pack.

The water sensor attachment thread has a slot machined down one side. The filter can be purged of water by partially unscrewing the sensor which aligns the slot in the threads with a corresponding hole in the sensor. When aligned, water and fuel can flow down the slot and flows from a small cast tube on the side of the sensor. Re-tightening the sensor mis-aligns the slot and stops the flow of fuel.

The sensor operates by measuring the resistance between its two electrodes, which are submerged in fuel, and activated by the presence of water. When the ignition switch is moved to position 'II', the warning lamp will illuminate for approximately 2 seconds to check warning lamp functionality.

When the filter is full with fuel and no water is present, the resistance of the Diesel fuel will show a reading of 15 mA maximum on the feed wire to the instrument pack. When sufficient water surrounds both electrodes, the resistance of the water will show a reading of 130 mA maximum. This will supply sufficient voltage to the instrument pack to illuminate the warning lamp, and alert the driver to the presence of water in the fuel system.

OPERATION

The low pressure stage of the fuel pump draws fuel from the swirl pot and pumps it into the fuel filter. The high pressure stage of the fuel pump draws the fuel from the fuel filter and pumps it along the fuel feed pipe to the cylinder head.

The fuel enters the cylinder head through a connection on the fuel pressure regulator housing and supplies each injector with pressurised fuel. The fuel pressure regulator maintains the fuel pressure at the injectors at 4 bar (58 lbf.in) by returning excess fuel back to the fuel filter. The returned fuel passes through the fuel cooler in the engine compartment before it passes to the fuel filter.

When the engine is running, each injector is operated by an overhead camshaft which depresses a push rod in each injector at a timed interval. When the cam has depressed the push rod and the push rod is returning to its extended position, fuel is drawn from the fuel supply drilling in the injector.

When the ECM determines that injection is required, the ECM transmits an electrical pulse which energises the fast acting solenoid, closing the spill valve on the injector and locking fuel in the injector body. As the cam begins to depress the push rod, the fuel in the injector is rapidly pressurised. When the pressure exceeds the nozzle spring pressure, the nozzle opens and injects fuel at very high pressure into the cylinder.

When the ECM determines that the injection period should end, the solenoid is rapidly de-energised, opening the spill valve on the injector and allowing fuel to pass into the return circuit.

The ECM controls the injection timing by altering the time at which the solenoid is energised, and the injection period by controlling the period for which the solenoid is energised.

HEATER PLUG TEST

Service repair no - 19.90.20.01

Check

1. **Test out of engine**
2. Remove heater plug. ***See Repair.***

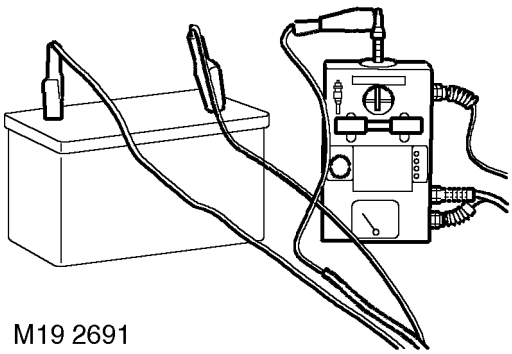

M19 2691

3. Using **LRT-12-511,** connect RED lead to battery '+' positive and the BLACK lead to battery '-' negative.
4. Position heater plug into tester and retain with spring loaded bar.
5. Connect YELLOW lead to heater plug terminal.
6. Press red button on tester and note ammeter reading. Keep button depressed, heater plug tip should start to glow after 5 seconds

CAUTION: The heater plug tip must glow first, if it fails to do so, replace heater plug.

7. The ammeter reading should show an initial current draw of 25 amps, which should fall to 12 amps after 20 seconds.
8. Refit heater plug. ***See Repair.***

FUEL SYSTEM - BLEED

Service repair no - 19.50.07

Fuel Purging Procedure

1. If the vehicle runs out of fuel, or the fuel level is so low that the fuel system draws air into the fuel rail, the fuel rail will need to be purged before the engine will start. This can be achieved by following a set procedure. The process does not require the use of any specialist equipment and can be performed by the driver of the vehicle. **The process is as follows:**
2. Switch off ignition and wait 15 seconds.
3. Turn ignition key to position 2 and wait 3 minutes, (this ensures that the fuel system purges all the air from the fuel rail within the cylinder head).
4. Depress the throttle pedal to more than 90% of its total travel, (to the throttle stop).
5. Crank the engine keeping the throttle pedal depressed.

NOTE: This operation is controlled by the ECM and it is important that the purging operation is not carried out on a vehicle that has not run out of fuel. If it is carried out unnecessarily it can lead to the engine flooding and failing to start.
This operation will be cancelled:

6. As soon as engine speed exceeds 600 rev/min.
7. The driver allows the throttle pedal to close to a position less than 90% of its travel.
8. The ignition key is released from the start position.

NOTE: The engine must not be cranked for more than 30 seconds in any one period.

9. Repeat the above procedure if the engine fails to start.

FUEL TANK - DRAIN

Service repair no - 19.55.02

1. Remove battery cover.
2. Disconnect both leads from battery, earth lead first.

WARNING: Fuel vapour is highly flammable and in contained spaces is also explosive and toxic. Always have a fire extinguisher containing FOAM, CO2, GAS OR POWDER close at hand when handling or draining fuel.

3. Using a fuel recovery appliance, drain the fuel from the tank into a sealed container. Follow the manufacturers instructions for the connection and safe use of the appliance.
4. Remove filler cap and insert hose into filler neck.
5. Connect bowser earth line. Drain fuel.
6. Connect battery leads.
7. Fit battery cover.

ELEMENT - AIR FILTER

Service repair no - 19.10.10

Remove

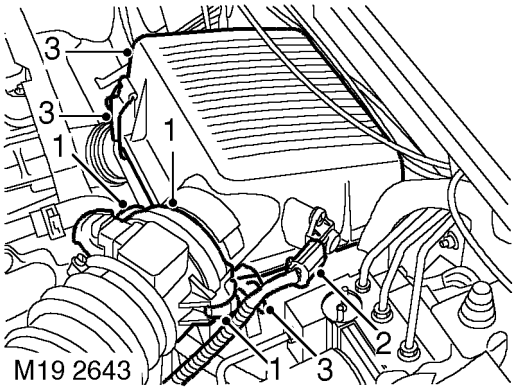

1. Release 2 clips and disconnect air flow meter from air filter cover.
2. Disconnect multiplug from AAP sensor.
3. Release 2 clips and remove cover from air filter.

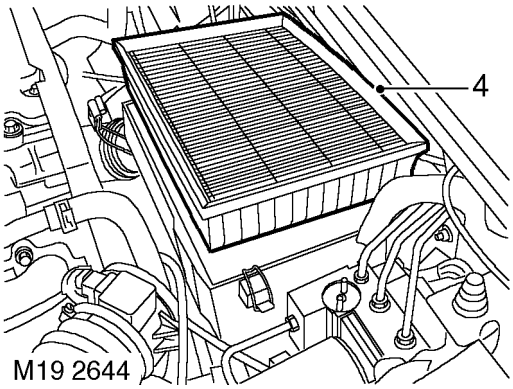

4. Remove air filter element.

Refit

5. Clean air filter body and cover.
6. Fit new air filter element.
7. Position air cleaner cover and secure clips.
8. Position air flow meter and secure clips.
9. Connect AAP sensor multiplug.

SENSOR - FUEL TEMPERATURE

Service repair no - 19.22.08

Remove

1. Remove 3 bolts and remove engine acoustic cover.
2. Release fixings and remove battery cover.
3. Disconnect battery negative lead.

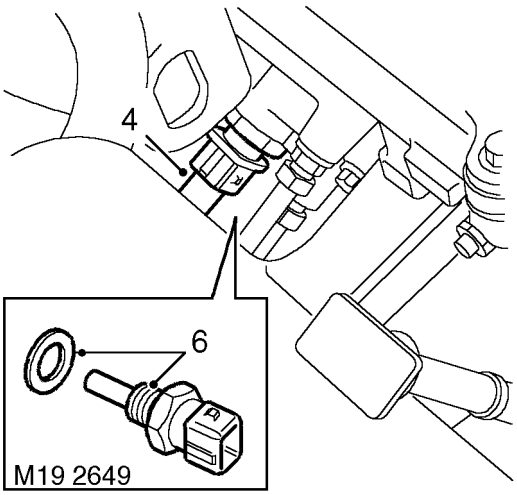

4. Disconnect multiplug from fuel temperature sensor.
5. Thoroughly clean area around fuel temperature sensor before removal.
6. Remove fuel temperature sensor and discard sealing washer.

Refit

7. Clean fuel temperature sensor mating faces.
8. Fit new sealing washer and tighten fuel temperature sensor to ***13 Nm (9 lbf. ft)*** .
9. Connect multiplug to fuel temperature sensor.
10. Reconnect battery negative lead.
11. Fit battery cover and secure fixings.
12. Fit engine acoustic cover and secure with bolts.

SWITCH - INERTIA - FUEL CUT OFF

Service repair no - 19.22.09

Remove

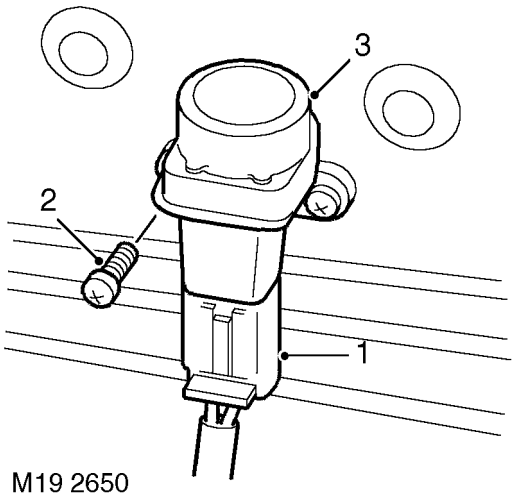

1. Disconnect multiplug from fuel cut off switch.
2. Remove 2 screws securing switch to bulkhead.
3. Remove switch.

Refit

4. Position switch to bulkhead.
5. Fit screws securing switch to bulkhead.
6. Connect multiplug.
7. Press top of switch to set switch.

SENSOR - MASS AIR FLOW (MAF)

Service repair no - 19.22.25

Remove

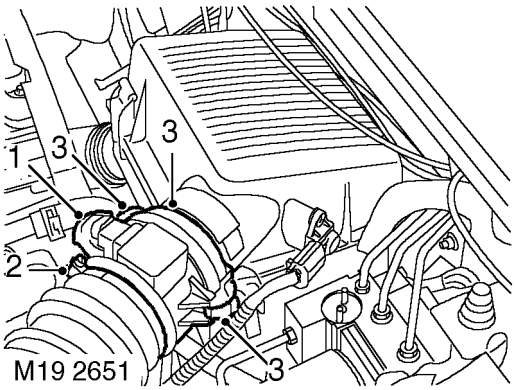

1. Disconnect multiplug from MAF sensor.
2. Loosen clip screw and release air intake hose from MAF sensor.
3. Release 2 clips and remove sensor from air cleaner.

Refit

4. Position sensor to air cleaner and secure clips.
5. Position air intake hose and tighten clip screw.
6. Connect multiplug.

SENSOR - COMBINED MAP AND IAT

Service repair no - 19.22.26

Remove

1. Remove 3 bolts and remove engine acoustic cover.

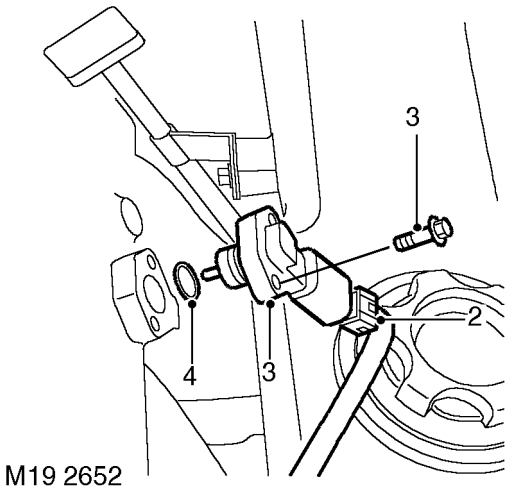

2. Disconnect multiplug from combined MAP and IAT sensor,
3. Remove 2 bolts securing sensor to inlet manifold.
4. Remove sensor and discard 'O' ring.

Refit

5. Clean sensor and mating face.
6. Fit new 'O' ring and position sensor to manifold.
7. Fit and tighten MAF and IAT sensor bolts to ***9 Nm (7 lbf.ft)***
8. Fit engine acoustic cover and secure with bolts.

SENSOR - AMBIENT AIR PRESSURE (AAP)

Service repair no - 19.22.27

Remove

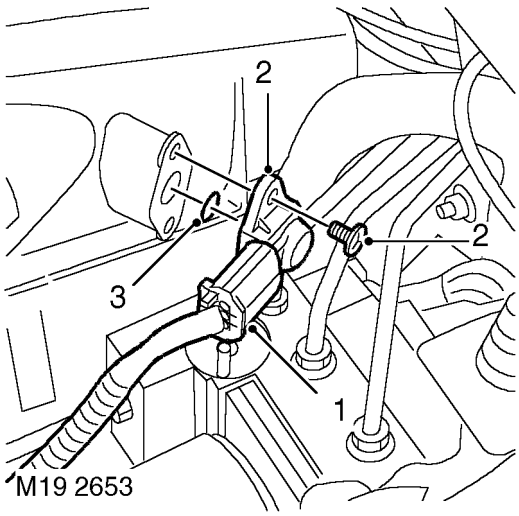

1. Disconnect multiplug from AAP sensor.
2. Remove 2 screws and remove sensor.
3. Remove and discard 'O' ring.

Refit

4. Clean sensor and air cleaner cover.
5. Fit new 'O' ring, fit sensor and tighten screws.
6. Connect multiplug to AAP sensor.

ELEMENT - FUEL FILTER

Service repair no - 19.25.07

Remove

1. Release fixings and remove battery cover.
2. Disconnect battery negative lead.
3. Raise rear of vehicle.

WARNING: Support on safety stands.

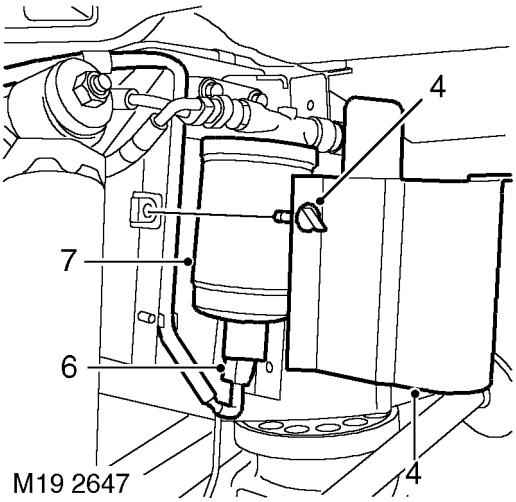

4. Release fixing and remove fuel filter cover.
5. Clean area around fuel filter.
6. Disconnect multiplug from filter element.
7. Remove fuel filter element.

Refit

8. Clean fuel filter and mating face.
9. Fit new fuel filter element and connect multiplug.
10. Position fuel filter cover and secure with fixing.
11. Remove stand(s) and lower vehicle.
12. Reconnect battery negative lead.
13. Fit and secure battery cover.

COOLER - FUEL

Service repair no - 19.25.30

Remove

1. Remove 3 bolts and remove engine acoustic cover.
2. Remove battery cover.
3. Disconnect battery negative lead.
4. Drain cooling system. ***See COOLING SYSTEM, Adjustment.***

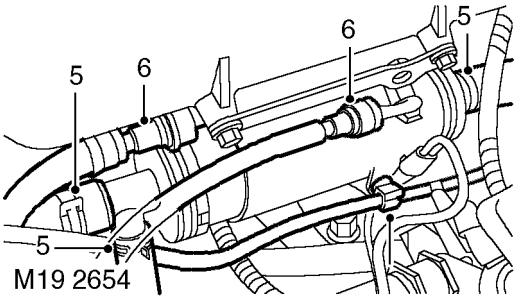

5. Release 3 clips and disconnect 3 coolant hoses from fuel cooler.
6. Release 2 fuel hoses from fuel cooler.

CAUTION: Plug the connections.

7. Release vacuum pipe clip from fuel cooler.
8. Remove 4 bolts securing fuel cooler to inlet manifold and remove cooler.

Refit

9. Clean fuel hose connections.
10. Position fuel cooler to inlet manifold. Apply Loctite 242 to bolts and tighten to ***18 Nm (13 lbf.ft).***
11. Connect fuel hoses.
12. Connect coolant hoses, secure with clips.
13. Secure vacuum hose to fuel cooler.
14. Refill cooling system. ***See COOLING SYSTEM, Adjustment.***
15. Fit engine acoustic cover and secure with bolts.
16. Reconnect battery negative lead.
17. Fit battery cover.

TURBOCHARGER

Service repair no - 19.42.01

Remove

1. Remove battery cover.
2. Disconnect battery negative lead.
3. Remove 3 bolts and remove engine acoustic cover.

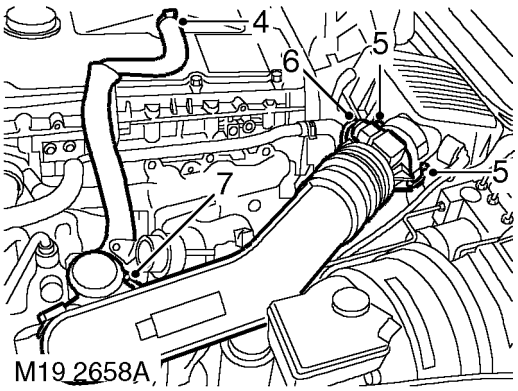

4. Release clip and disconnect breather hose from camshaft cover.
5. Release clips and disconnect air flow meter from air filter.
6. Disconnect multiplug from air flow meter.
7. Loosen clip screw and remove air inlet hose from turbocharger.

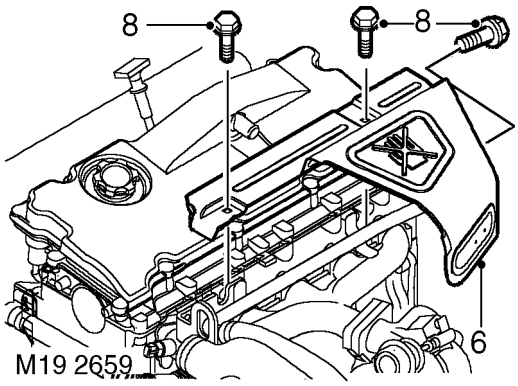

8. Remove 3 bolts and remove exhaust manifold heat shield.

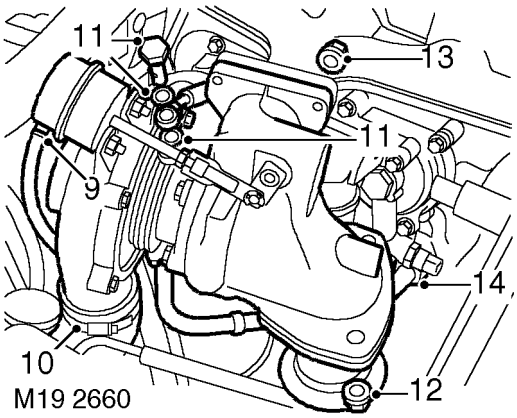

9. Release clip and disconnect vacuum hose from turbocharger wastegate.
10. Loosen clip screw and release air outlet hose from turbocharger.
11. Remove turbocharger oil feed banjo bolt and discard sealing washers.
12. Remove 3 nuts and release exhaust front pipe from turbocharger and discard gasket.
13. Remove 3 nuts securing turbocharger to exhaust manifold.
14. Loosen and unscrew turbocharger drain pipe union from cylinder block.
15. Remove turbocharger and discard gasket.

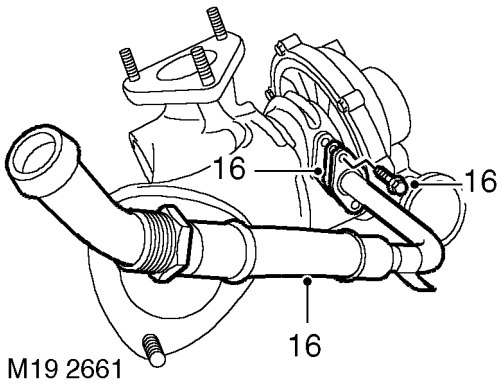

16. Remove 2 bolts and remove turbocharger oil drain pipe. Discard gasket.

Refit

17. Clean turbocharger and oil drain pipe mating faces.
18. Using a NEW gasket, fit turbocharger drain pipe and tighten bolts to ***10 Nm (7 lbf.ft).***
19. Using a new gasket fit turbocharger to exhaust manifold and tighten nuts to ***30 Nm (22 lbf. ft)*** .
20. Position oil drain pipe to cylinder block and tighten union.
21. Using new gasket, align exhaust front pipe and tighten nuts to ***30 Nm (22 lbf.ft)***
22. Fit banjo bolt to oil feed pipe using new sealing washers and tighten to ***25 Nm (18 lbf.ft)*** .
23. Position air outlet hose to turbocharger and tighten clip screw.
24. Position and secure vacuum hose to turbocharger wastegate.
25. Position exhaust manifold heat shield and tighten M6 bolts to ***9 Nm (7 lbf.ft)*** and M8 bolt to ***25 Nm (18 lbf.ft)*** .
26. Position air inlet hose to turbocharger and tighten clip screw.
27. Connect air flow meter to air filter and secure clips.
28. Connect air flow meter multiplug.
29. Connect breather hose and secure clip.
30. Fit engine acoustic cover and secure with bolts.
31. Reconnect battery negative lead.
32. Fit battery cover.

FILTER ASSEMBLY - AIR

Service repair no - 19.10.01

Remove

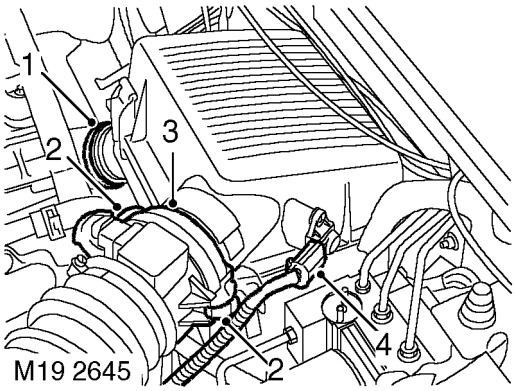

1. Loosen clip screw and release intake hose from air filter.
2. Release 2 clips securing air flow meter.
3. Release air flow meter from air filter cover and position aside.
4. Disconnect multiplug from AAP sensor.

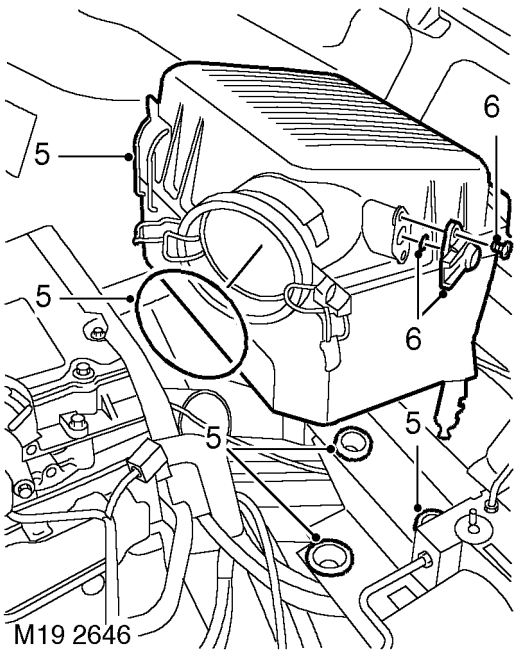

5. Release air filter from 3 grommets, remove assembly and discard 'O' ring.
6. Remove 2 screws, remove AAP sensor and discard 'O' ring.

Refit

7. Clean air flow meter faces.
8. Fit new 'O' ring to air filter.
9. Clean AAP sensor.
10. Using new 'O' ring, fit AAP sensor and tighten screws.
11. Position air filter assembly and secure in grommets.
12. Position air flow meter and secure clips.
13. Position intake hose to air filter and tighten clip screw.

INJECTOR - SET

Service repair no - 19.60.12

Remove

1. Remove cooling fan. ***See COOLING SYSTEM, Repair.***
2. Remove rocker shaft. ***See ENGINE , Repair.***
3. Position container to catch fuel spillage.

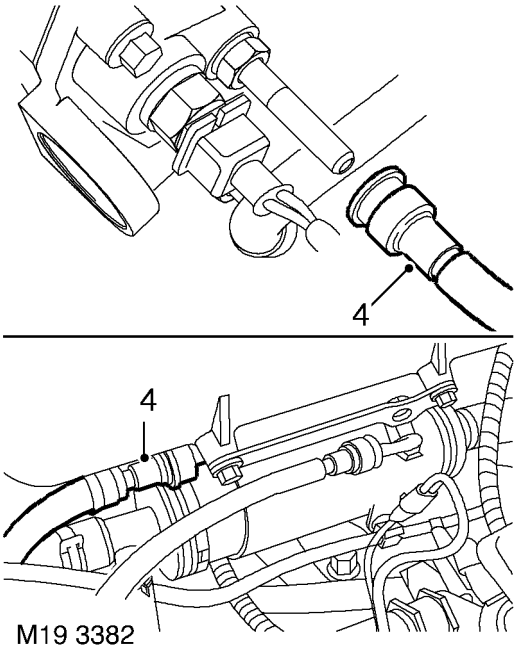

4. Disconnect quick release fuel hose connectors from fuel connector block on cylinder head and fuel cooler to drain fuel from cylinder head.
5. Disconnect 5 multiplugs from injectors.
6. Remove Torx bolt securing injector unit to cylinder head.

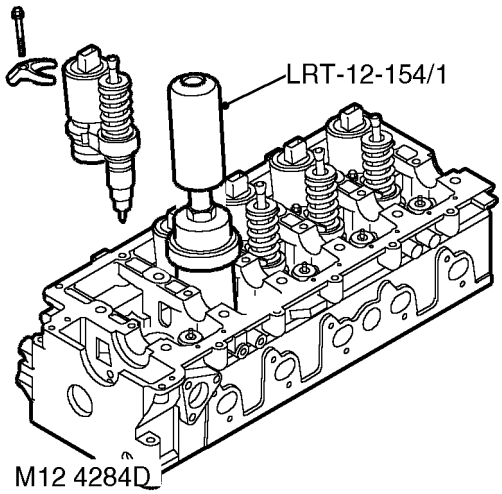

7. Assemble **LRT-12-154/1** to injector unit, screw in slide hammer and remove injector.

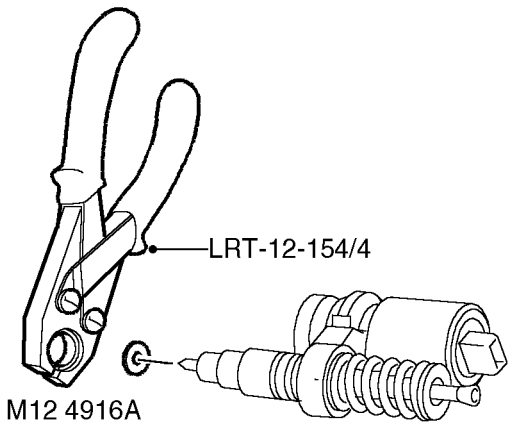

8. Using **LRT-12-154/4,** remove and discard sealing washer.

9. Remove and discard 'O' ring seal.
10. Rotate engine to align camshaft lobes for access of injector removal tool.
11. Carry out above procedure to remove the remaining 4 injectors.
12. Rotate engine manually until each cylinder being worked on is at TDC, and remove excess fuel from piston bowl using a syringe.

Refit

13. Clean injector unit and mating faces in cylinder head.

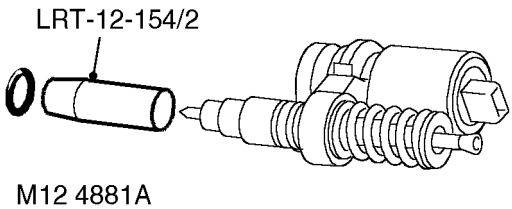

14. Position **LRT-12-154/2** to injector units and fit new 'O' rings.

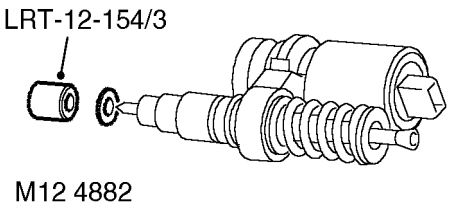

15. Fit new sealing washers to injector nozzles using **LRT-12-154/3.**
16. Fit retainers to injectors, carefully fit injectors ensuring retainer is located on its dowel and tighten bolt to ***32 Nm (24 lbf.ft)***
17. Connect multiplug to injector.
18. Repeat above operation for remaining injectors.
19. Connect fuel hoses.
20. New injectors must be programmed using TestBook.
21. Fit rocker shaft. ***See ENGINE , Repair.***
22. Fit cooling fan. ***See COOLING SYSTEM, Repair.***

HEATER PLUGS - SET

Service repair no - 19.60.31

Remove

1. Remove 3 bolts and remove engine acoustic cover.
2. Remove battery cover.
3. Disconnect battery negative lead.

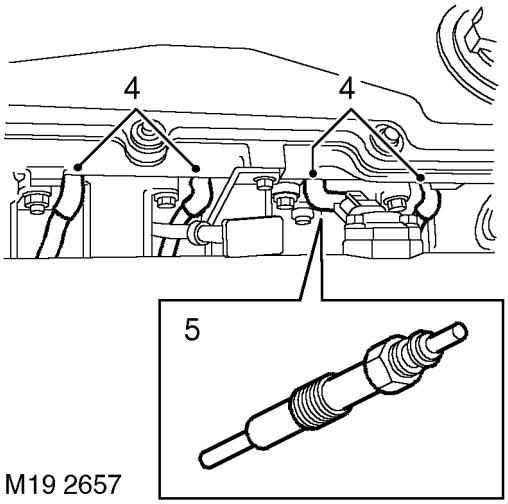

M19 2657

4. Disconnect 4 heater plug leads.
5. Loosen and remove 4 heater plugs.

Refit

6. Throughly clean heater plugs and seating area in cylinder head.
7. Apply a suitable anti-seize compound to threads of heater plugs.
8. Fit heater plugs and tighten to ***16 Nm (12 lbf. ft)*** .
9. Connect heater plug leads.
10. Fit engine acoustic cover.
11. Reconnect battery negative lead.
12. Fit battery cover.

INTERCOOLER

Service repair no - 19.42.15

Remove

1. Remove radiator. ***See COOLING SYSTEM, Repair.***

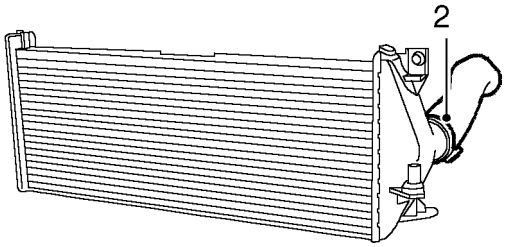

M19 2648

2. Release clip and remove air hose from intercooler.

Refit

3. Position air hose to intercooler and secure with clip.
4. Fit radiator. ***See COOLING SYSTEM, Repair.***

POTENTIOMETER - THROTTLE

Service repair no - 19.30.14

Remove

NOTE: The throttle potentiometer is an integral part of the throttle pedal assembly and must not be dismantled.

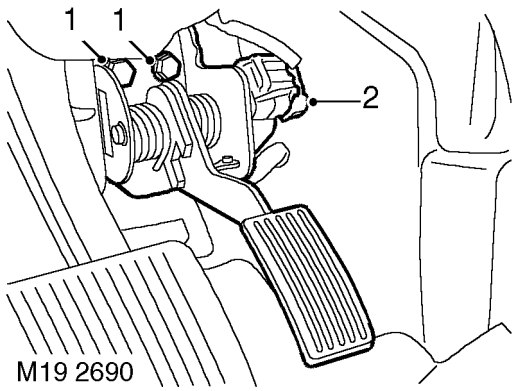

1. With assistance remove 2 nuts and bolts securing throttle pedal to body.
2. Disconnect multiplug from throttle potentiometer and remove throttle pedal.

Refit

NOTE: From Vin 607225 a three track throttle potentiometer was fitted in place of a two track potentiometer. Three track potentiometers cannot be fitted to vehicles previously fitted with two track potentiometers. Two track potentiometers can be fitted to vehicles previously fitted with three track potentiometers, but TestBook must be used to configure the ECM.

3. Connect multiplug to throttle potentiometer.
4. Position throttle pedal assembly, tighten nuts and bolts to ***25 Nm (18 lbf.ft).***

PUMP - FUEL

Service repair no - 19.45.08

Remove

1. Remove fuel tank. ***See this Section.***

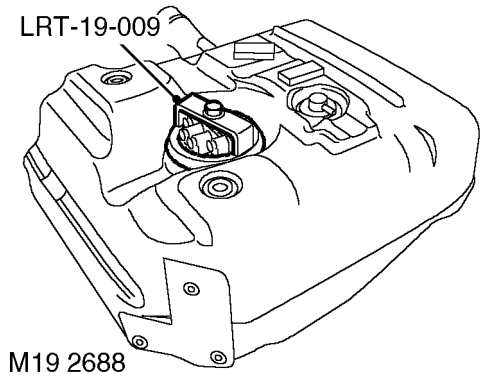

2. Using **LRT-19-009** remove locking ring from fuel pump housing.
3. Remove fuel pump from tank and discard sealing ring.

Refit

4. Clean pump housing and mating face on fuel tank.
5. Fit seal to pump housing.
6. Fit pump to fuel tank and secure with locking ring.
7. Fit fuel tank. ***See this Section.***

REGULATOR - FUEL PRESSURE

Service repair no - 19.45.06

Remove

1. Remove battery cover.
2. Disconnect battery negative lead.
3. Remove 3 bolts and remove engine acoustic cover.

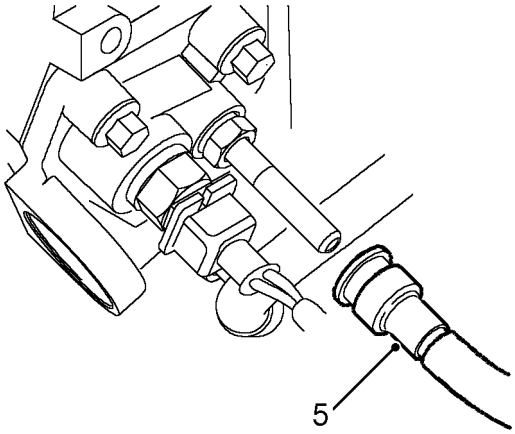

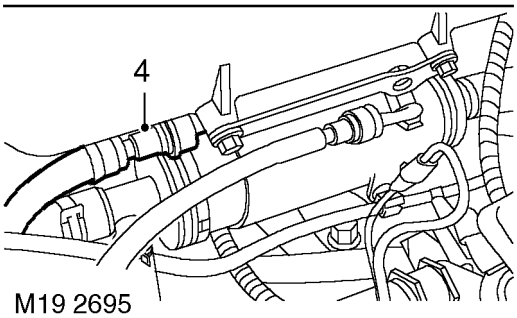

M19 2695

4. Release hose from fuel cooler.
5. Release fuel hoses from pressure regulator.

CAUTION: Plug the connections.

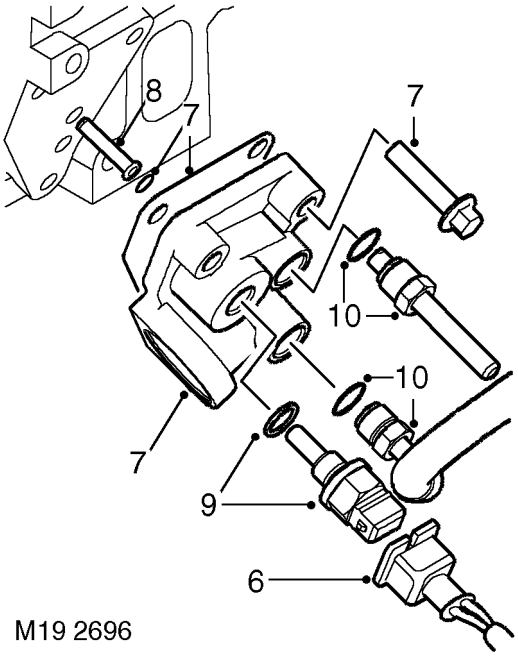

M19 2696

6. Disconnect multiplug from fuel temperature sensor.
7. Remove 3 bolts, remove pressure regulator from cylinder head and collect gasket and 'O'ring.
8. Remove fuel filter from cylinder head.
9. Remove fuel temperature sensor and discard sealing washer.
10. Remove fuel hose and fuel pipe and discard 'O' rings.

Refit

11. Clean fuel pressure regulator, mating face and fuel filter.
12. Clean fuel pipe unions.
13. Fit fuel pipe and fuel hose to pressure regulator using new 'O' rings.
14. Fit fuel temperature sensor using new sealing washer and tighten to ***14 Nm (11 lbf.ft)*** .
15. Fit fuel filter to cylinder head.
16. Using a new gasket and 'O' ring position pressure regulator and tighten bolts to ***25 Nm (18 lbf.ft)*** .
17. Connect fuel temperature sensor.
18. Connect fuel hoses to pressure regulator and fuel cooler.
19. Fit engine acoustic cover.
20. Reconnect battery negative lead.
21. Fit battery cover.

FUEL TANK

Service repair no - 19.55.01

Remove

1. Drain fuel tank. ***See Adjustment.***
2. Raise rear of vehicle.

WARNING: Support on safety stands.

Vehicles fitted with tow bar

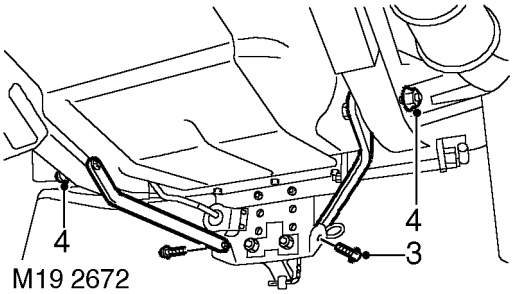

3. Remove 2 bolts securing support bars to drop plate.
4. Loosen 2 nuts securing support bars to chassis.

All Vehicles

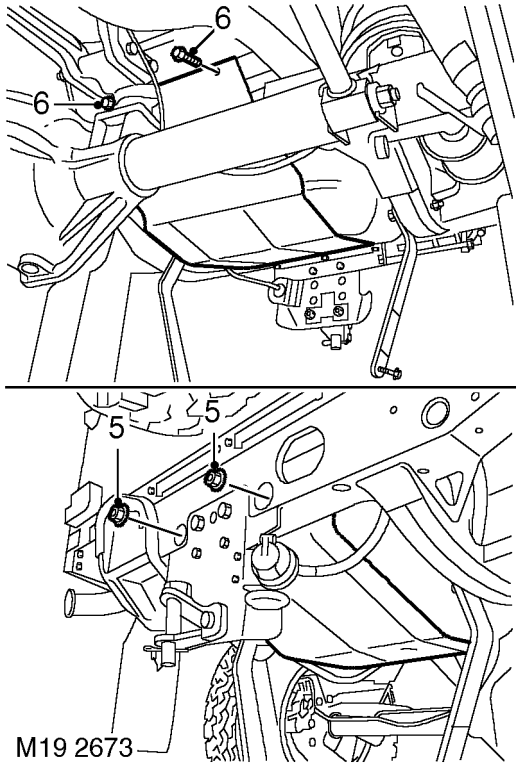

5. Remove 2 nuts securing fuel tank support to rear chassis member.
6. Remove 2 bolts securing fuel tank support plate to chassis member.

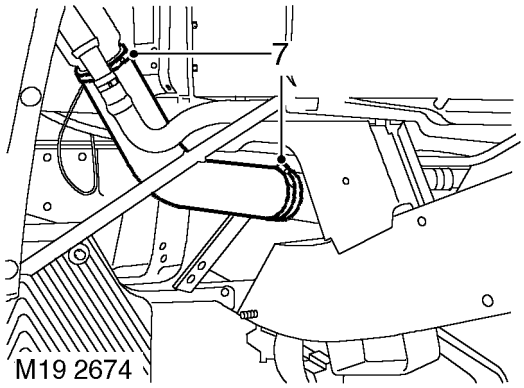

7. Release clip securing filler hose and release hose from filler neck.

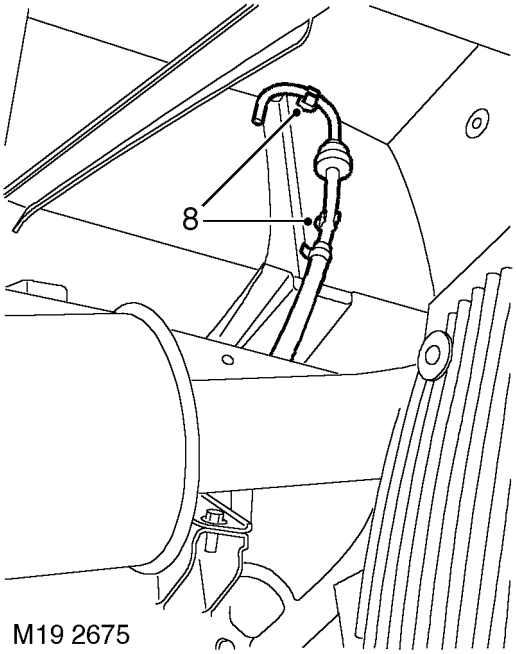

M19 2675

8. Disconnect vent hose from clips on rear chassis member.
9. Support weight of fuel tank.
10. With assistance, lower fuel tank and remove support plate.

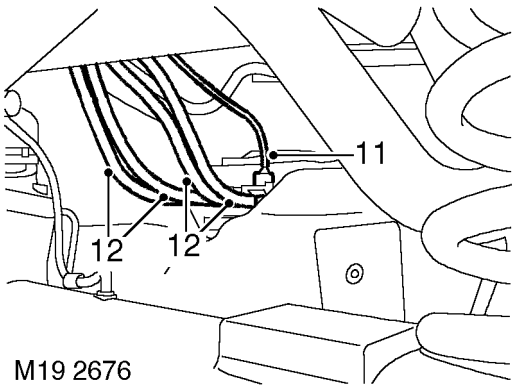

M19 2676

11. Disconnect multiplug from fuel pump.
12. Noting their fitted position, disconnect 4 fuel hoses from fuel pump.

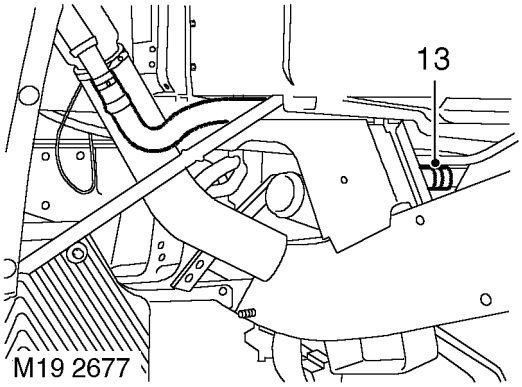

M19 2677

13. Release clip and disconnect filler neck breather from fuel tank.
14. With assistance, lower and remove fuel tank.

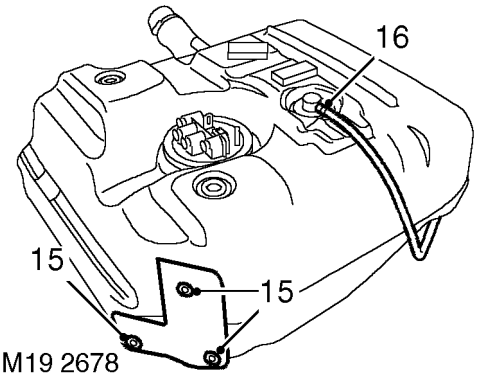

M19 2678

15. Remove 2 scrivits securing heat shield remove heat shield.
16. Release clip securing breather hose to tank and remove hose.

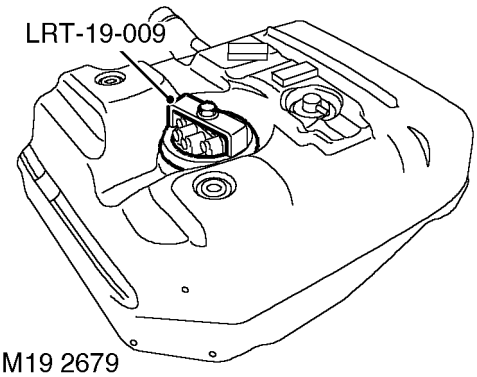

M19 2679

17. Using **LRT-19-009** remove fuel pump locking ring.
18. Remove fuel pump and discard sealing ring.

Refit

19. Clean fuel pump and mating face.
20. Fit new fuel pump sealing ring.
21. Fit fuel pump and secure with locking ring.
22. Fit breather hose and secure clip.
23. Position heat shield and secure with scrivits.
24. With assistance position fuel tank and support plate.
25. Connect fuel hoses and multiplug to fuel pump.
26. Connect filler neck breather and secure clip.
27. Position vent hose and secure to chassis clips.
28. Raise fuel tank to its fitted position.
29. Fit nuts and bolts securing fuel tank and tighten to ***25 Nm (18 lbf.ft)*** .
30. Connect filler hose and secure clip.

Vehicles fitted with tow bar

31. Position support bar and tighten nuts and bolts.
32. Reconnect battery negative lead.
33. Fit battery cover.

NECK - FUEL TANK FILLER

Service repair no - 19.55.07

Remove

1. Drain fuel tank. ***See Adjustment.***

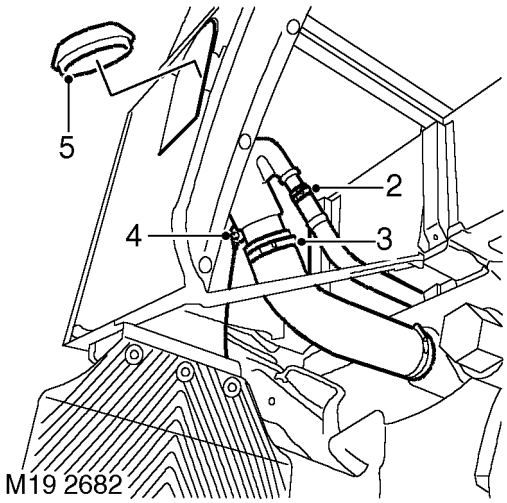

2. Loosen clip securing breather hose to fuel filler neck and release hose.
3. Loosen clip securing fuel filler hose to neck and release hose.
4. Remove screw and release earth lead from filler neck.
5. Remove grommet securing filler neck to body.
6. Remove filler neck from body.

Refit

7. Fit filler neck to body.
8. Coat rubber grommet with soap solution.
9. Fit rubber grommet securing filler neck to body.
10. Connect earth lead and tighten screw.
11. Connect filler hose to neck and tighten clip.
12. Fit breather hose to filler neck and secure with clip.

26 - COOLING SYSTEM

CONTENTS

Page

DESCRIPTION AND OPERATION

COOLING SYSTEM COMPONENT LAYOUT 2
COOLING SYSTEM COOLANT FLOW 4
GENERAL 5
OPERATION 11

ADJUSTMENT

DRAIN AND REFILL 1

REPAIR

COUPLING - COOLING FAN 1
THERMOSTAT 1
PUMP - COOLANT 2
RADIATOR 3

This page is intentionally left blank

COOLING SYSTEM COMPONENT LAYOUT

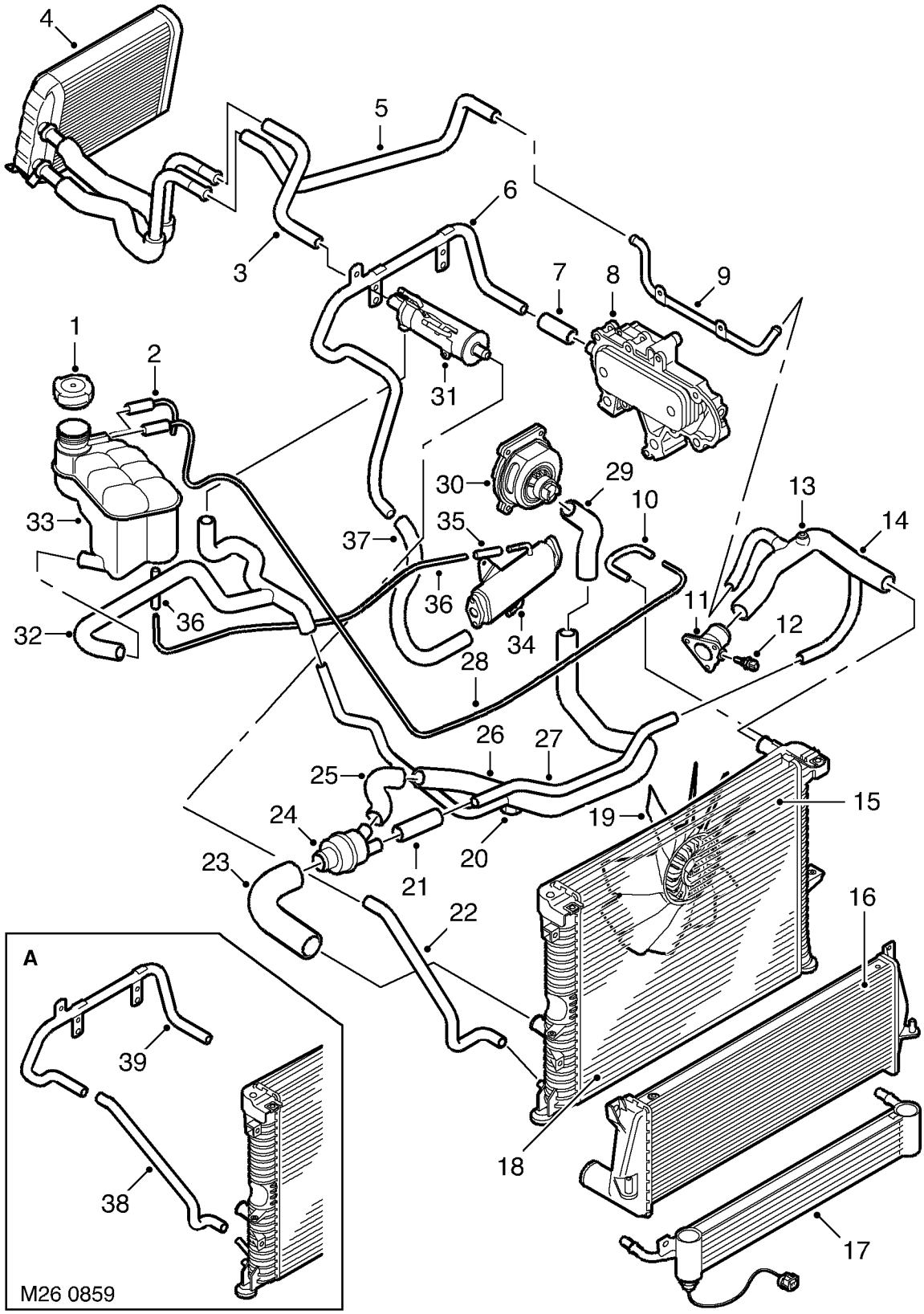

NOTE: Inset A shows differences for Pre EU3 models

1. Pressure cap
2. Overflow pipe
3. Heater return hose
4. Heater matrix
5. Heater inlet hose
6. Oil cooler return pipe - EU3 models
7. Connecting hose
8. Oil cooler housing assembly
9. Heater inlet pipe
10. Connecting hose
11. Outlet housing
12. Engine Coolant Temperature (ECT) sensor
13. Bleed screw
14. Radiator top hose
15. Radiator - upper
16. Intercooler
17. Gearbox oil cooler
18. Radiator - lower
19. Viscous fan
20. Drain plug
21. Connecting hose
22. Fuel cooler feed hose
23. Radiator bottom hose
24. Thermostat housing
25. Connecting hose
26. Coolant pump feed pipe
27. Coolant by-pass pipe
28. Radiator bleed pipe
29. Connecting hose
30. Coolant pump
31. Fuel cooler
32. Heater/expansion tank return hose
33. Expansion tank
34. EGR Cooler - EU3 models
35. Connecting hose - EU3 models
36. Connecting hose - EU3 models
37. Hose - EGR Cooler to oil cooler return pipe - EU3 models
38. Radiator lower feed hose - Pre EU3 models
39. Oil cooler return pipe - Pre EU3 models

COOLING SYSTEM COOLANT FLOW

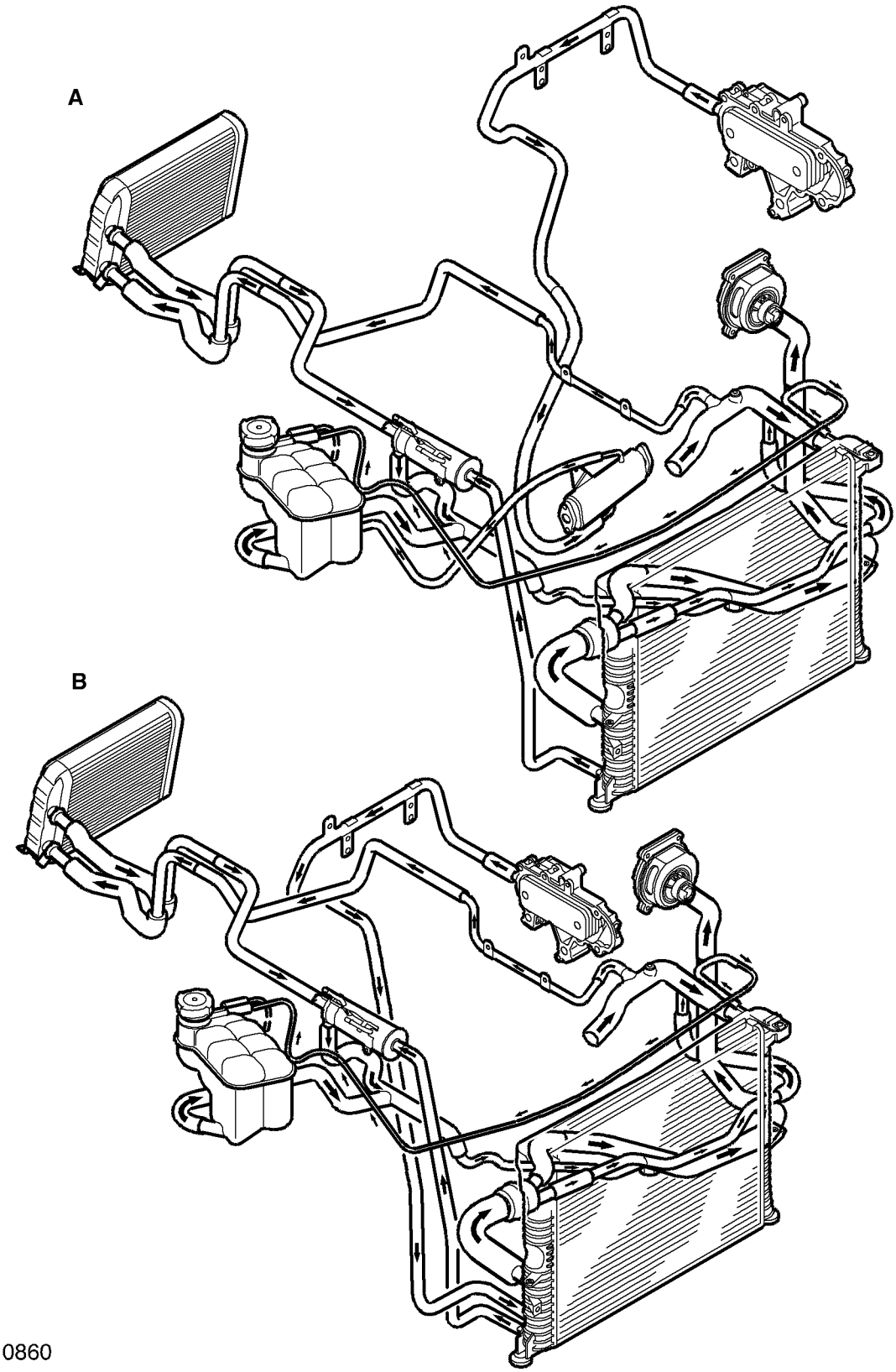

M26 0860

A - EU 3 Models

B- Pre EU3 Models

GENERAL

The cooling system used on the Diesel engine is a pressure relief by-pass type system which allows coolant to circulate around the engine block and heater circuit when the thermostat is closed. With coolant not passing through the by-pass or the radiator promotes faster heater warm-up which in turn improves passenger comfort.

A coolant pump is mounted on a casting behind the PAS pump and is driven from the PAS pump at crankshaft speed by the auxiliary drive belt. The pump mounting casting connects with passages in the cylinder block and pumps coolant from the radiator through the cylinder block.

A viscous fan is attached to an idler pulley at the front of the engine. The fan is attached to a threaded spigot on the pulley with a right hand threaded nut. The fan draws air through the radiator to assist in cooling when the vehicle is stationary. The fan rotational speed is controlled relative to the running temperature of the engine by a thermostatic valve regulated by a bi-metallic coil.

The cooling system uses a 50/50 mix of anti-freeze and water.

Thermostat Housing
A plastic thermostat housing is located behind the radiator. The housing has three connections which locate the radiator bottom hose, top hose and coolant pump feed pipe. The housing contains a wax element thermostat and a spring loaded by-pass flow valve.

Thermostat - Main valve
The thermostat is used to maintain the coolant at the optimum temperature for efficient combustion and to aid engine warm-up. The thermostat is closed at temperatures below approximately 82 °C (179 °F). When the coolant temperature reaches approximately 82 °C the thermostat starts to open and is fully open at approximately 96 °C (204 °F). In this condition the full flow of coolant is directed through the radiator.

The thermostat is exposed to 90% hot coolant from the engine on one side and 10% cold coolant returning from the radiator bottom hose on the other side.

Hot coolant from the engine passes from the by-pass pipe through four sensing holes in the flow valve into a tube surrounding 90% of the thermostat sensitive area. Cold coolant returning from the radiator, cooled by the ambient air, conducts through 10% of the thermostat sensitive area.

In cold ambient temperatures, the engine temperature is raised approximately 10 °C (50 °F) to compensate for the heat loss of 10% exposure to the cold coolant returning from the radiator bottom hose.

By-pass flow valve
The by-pass flow valve is held closed by a light spring. It operates to further aid heater warm-up. When the main valve is closed and the engine speed is below 1500 rev/min, the coolant pump does not produce sufficient flow and pressure to open the valve. In this condition the valve prevents coolant circulating through the by-pass circuit and forces the coolant through the heater matrix only. This provides a higher flow of warm coolant through the heater matrix to improve passenger comfort in cold conditions.

When the engine speed increases above 1500 rev/min the coolant pump produces a greater flow and pressure than the heater circuit can take. The pressure acts on the flow valve and overcomes the valve spring pressure, opening the valve and limiting the pressure in the heater circuit. The valve modulates to provide maximum coolant flow through the heater matrix and yet allowing excess coolant to flow into the by-pass circuit to provide the engines cooling needs at higher engine rev/min.

Outlet Housing
A cast aluminium outlet housing is attached to the cylinder head with three bolts and sealed with a gasket. Coolant leaves the engine through the outlet housing and is directed through a hose to the heater matrix, the radiator or the by-pass circuit.

An Engine Coolant Temperature (ECT) sensor is installed in a threaded port on the side of the outlet housing. The sensor monitors coolant temperature emerging from the engine and sends signals to the Engine Control Module (ECM) for engine management and temperature gauge operation.

Expansion Tank
The expansion tank is located in the engine compartment. The tank is made from moulded plastic and attached to brackets on the right hand inner wing. A maximum coolant when cold level is moulded onto the tank.

Excess coolant created by heat expansion is returned to the expansion tank from the radiator bleed pipe at the top of the radiator. An outlet pipe is connected into the coolant pump feed hose and replaces the coolant displaced by heat expansion into the system when the engine is cool.

The expansion tank is fitted with a sealed pressure cap. The cap contains a pressure relief valve which opens to allow excessive pressure and coolant to vent through the overflow pipe. The relief valve is open at a pressure of 1.4 bar (20 lbf.in) and above.

Heater Matrix
The heater matrix is fitted in the heater assembly inside the passenger compartment. Two pipes pass through the bulkhead into the engine compartment and provide coolant flow to and from the matrix. The pipes from the bulkhead are connected to the matrix, sealed with 'O' rings and clamped with circular rings.

The matrix is constructed from aluminium with two end tanks interconnected with tubes. Aluminium fins are located between the tubes and conduct heat from the hot coolant flowing through the tubes. Air from the heater assembly is warmed as it passes through the matrix fins. The warm air is then distributed in to the passenger compartment as required.

When the engine is running, coolant from the engine is constantly circulated through the heater matrix.

Radiator
The 44 row radiator is located at the front of the vehicle in the engine compartment. The cross flow type radiator is manufactured from aluminium with moulded plastic end tanks interconnected with tubes. The bottom four rows are separate from the upper radiator and form the lower radiator for the fuel cooler. Aluminium fins are located between the tubes and conduct heat from the hot coolant flowing through the tubes, reducing the coolant temperature as it flows through the radiator. Air intake from the front of the vehicle when moving carries the heat away from the fins. When the vehicle is stationary, the viscous fan draws air through the radiator fins to prevent the engine from overheating.

Two connections at the top of the radiator provide for the attachment of the top hose from the outlet housing and bleed pipe to the expansion tank. Three connections at the bottom of the radiator allow for the attachment of the bottom hose to the thermostat housing and the return hose from the oil cooler and the feed hose to the fuel cooler.

The bottom four rows of the lower radiator are dedicated to the fuel cooler. The upper of the two connections at the bottom of the radiator receives coolant from the oil cooler. This is fed through the four rows of the lower radiator in a dual pass and emerges at the lower connection. The dual pass lowers the coolant temperature by up to 24 °C before being passed to the fuel cooler. Two smaller radiators are located in front of the cooling radiator. The upper radiator is the intercooler for the air intake system and the lower radiator provides cooling of the gearbox oil.

Pipes and Hoses
The coolant circuit comprises flexible hoses and metal formed pipes which direct the coolant into and out of the engine, radiator and heater matrix. Plastic pipes are used for the bleed and overflow pipes to the expansion tank. A bleed screw is installed in the radiator top hose and is used to bleed air during system filling. A drain plug to drain the heater and cylinder block circuit of coolant is located on the underside of the coolant pump feed pipe.

Oil Cooler
The oil cooler is located on the left hand side of the engine block behind the oil centrifuge and oil filter. Oil from the oil pump is passed through a heat exchanger which is surrounded by coolant in a housing on the side of the engine.

Full water pump flow is directed along the cooler housing which also distributes the flow evenly along the block into three core holes for cylinder cooling. This cools the engine oil before it is passed into the engine. A small percentage of the coolant from the oil cooler passes into a metal pipe behind the engine. It then flows into the lower radiator via a hose.

Fuel Cooler
The fuel cooler is located on the right hand side of the engine and is attached to the inlet manifold. The cooler is cylindrical in design and has a coolant feed connection at its forward end. A 'T' connection at the rear of the cooler provides a connection for the coolant return from the heater matrix and coolant return from the fuel cooler.

The 'T' connection houses a thermostat which opens at approximately 82 °C. This prevents the cooler operating in cold climates. Two quick release couplings on the cooler allow for the connection of the fuel feed from the pressure regulator and return to the fuel tank. A counter flow system is used within the cooler.

Fuel flows around a coolant jacket within the cooler and flows from the back to the front of the cooler. As the hot fuel cools travelling slowly forwards it meets progressively colder coolant travelling in the opposite direction maintaining a differential cooling effect.

Coolant Pump

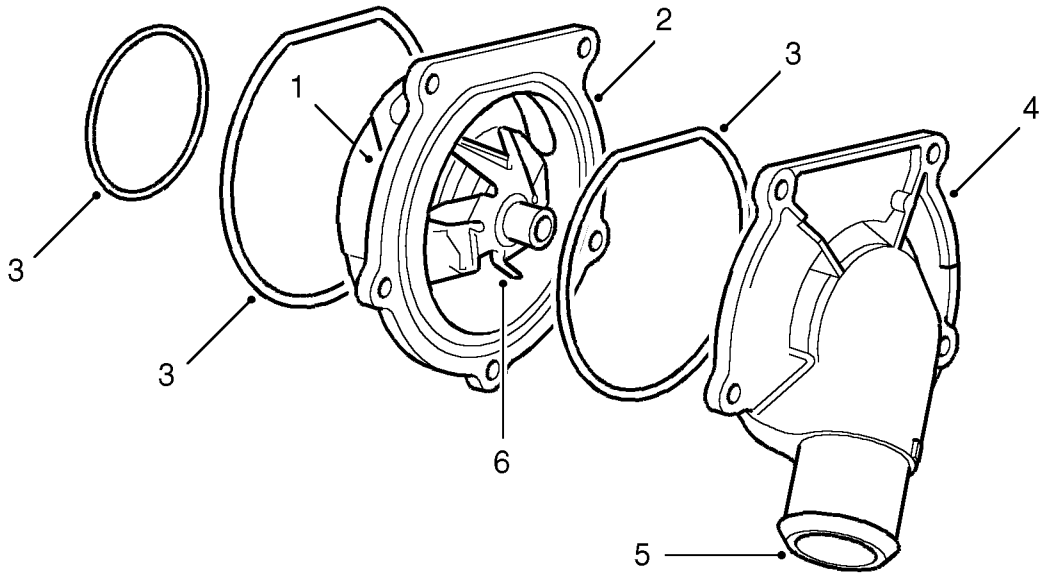

M26 0557

1. Drive lugs (hidden)
2. Housing
3. 'O' rings
4. Cover
5. Feed hose connection
6. Impeller

The coolant pump is attached on the left hand side of the engine, behind the PAS pump. A cast housing, bolted to the cylinder block provides a common attachment point for both pumps. The housing has galleries which connect the coolant pump to the cylinder block and the oil cooler housing. The coolant pump comprises a shaft, a housing and a cover.

The shaft, which passes through the alloy housing, is supported at each end by bearings. Seals at each end of the shaft protect the bearings from the coolant. The forward end of the shaft has two lugs which engage with the PAS pump shaft. The opposite end of the shaft is fitted with an impeller which draws coolant from the feed pipe and circulates it through galleries in the cylinder block. The shaft is driven by the auxiliary drive belt at the same rotational speed as the crankshaft by a pulley attached to the PAS pump.

The pump is sealed in the cast housing with two 'O' rings. An outer cover is positioned over the pump and secured with six bolts and sealed to the pump with an 'O' ring. The cover provides the attachment for the feed pipe connecting hose.

Viscous Fan

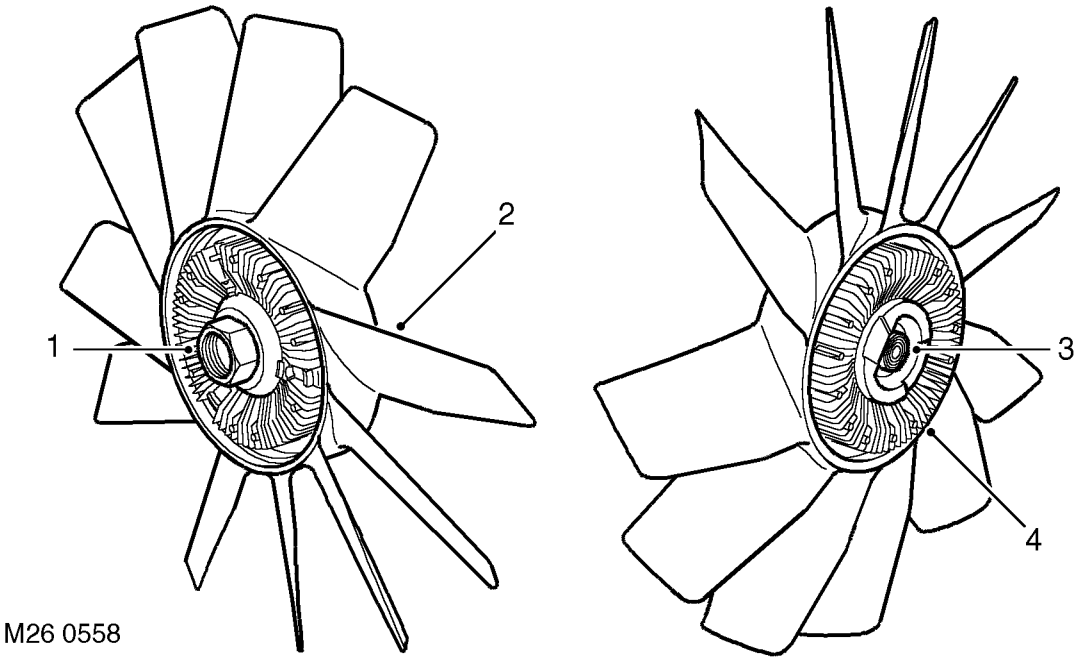

1. Idler pulley drive attachment
2. Fan blades
3. Bi-metallic coil
4. Body

The viscous fan provides a means of controlling the speed of the fan relative to the operating temperature of the engine. The fan rotation draws air through the radiator, reducing engine coolant temperatures when the vehicle is stationary or moving slowly.

The viscous fan is attached to an idler pulley at the front of the engine which is driven at crankshaft speed by the auxiliary drive belt. The fan is secured to the pulley by a right hand threaded nut. The nut is positively attached to the fan spindle which is supported on bearings in the fan body. The viscous drive comprises a circular drive plate attached to the spindle and driven from the idler pulley. The drive plate and body have interlocking annular grooves with a small clearance which provides the drive when silicone fluid enters the fluid chamber. A bi-metallic coil is fitted externally on the forward face of the body. The coil is connected to and operates a valve in the body. The valve operates on a valve plate with ports that connect the reservoir to the fluid chamber. The valve plate also has return ports which, when the valve is closed, scoop fluid from the fluid chamber and push it into the reservoir under centrifugal force.

Silicone fluid is retained in a reservoir at the front of the body. When the engine is off and the fan is stationary, the silicone fluid level stabilises between the reservoir and the fluid chamber. This will result in the fan operating when the engine is started, but the drive will be removed quickly after the fan starts rotating and the fan will ’freewheel’.

At low radiator temperatures, the fan operation is not required and the bi-metallic coil keeps the valve closed, separating the silicone fluid from the drive plate. This allows the fan to 'freewheel' reducing the load on the engine, improving fuel consumption and reducing noise generated by the rotation of the fan.

When the radiator temperature increases, the bi-metallic coil reacts and moves the valve, allowing silicone fluid to flow into the fluid chamber. The resistance to shear of the silicone fluid creates drag on the drive plate and provides drive to the body and the fan blades.

OPERATION

Coolant Flow - Engine Warm Up

During warm up the coolant pump moves fluid through the cylinder block and it emerges from the outlet housing. From the outlet housing, the warm coolant flow is prevented from flowing through the upper and lower radiators because both thermostats are closed. The coolant is directed into the heater circuit.

Some coolant from the by-pass pipe can pass through small sensing holes in the flow valve. The warm coolant enters a tube in the thermostat housing and surrounds 90% of the thermostat sensitive area. Cold coolant returning from the radiator bottom hose conducts through 10% of the thermostat sensitive area. In cold ambient temperatures the engine temperature can be raised by up to 10°C (50°F) to compensate for the heat loss of the 10% exposure to the cold coolant return from the radiator bottom hose.

At engine speeds below 1500 rev/min, the by-pass valve is closed only allowing the small flow through the sensing holes. As the engine speed increases above 1500 rev/min, the greater flow and pressure from pump overcomes the light spring and opens the by-pass flow valve. The flow valve opens to meet the engine's cooling needs at higher engine speeds and prevents excess pressure in the cooling system. With both thermostats closed, maximum flow is directed through the heater circuit.

The heater matrix acts as a heat exchanger reducing the coolant temperature as it passes through the matrix. Coolant emerges from the heater matrix and flows to the fuel cooler 'T' connection via the heater return hose. From the fuel cooler the coolant is directed into the coolant pump feed pipe and recirculated around the heater circuit. In this condition the cooling system is operating at maximum heater performance.

Coolant Flow - Engine Hot

As the coolant temperature increases the main thermostat opens. This allows some coolant from the outlet housing to flow through the top hose and into the radiator to be cooled. The hot coolant flows from the left tank in the radiator, along the tubes to the right tank. The air flowing through the fins between the tubes cools the coolant as it passes through the radiator.

A controlled flow of the lower temperature coolant is drawn by the pump and blended with hot coolant from the by-pass and the heater return pipes in the pump feed pipe. The pump then passes this coolant, via the cylinder block, to the oil cooler housing, cooling the engine oil before entering the block to cool the cylinders.

When the fuel temperature increases, the heat from the fuel conducts through the fuel cooler 'T' connection and causes the fuel thermostat to open. Coolant from the cylinder block flows through the oil cooler and via a pipe and hose enters the lower radiator. The lower temperature coolant from the oil cooler housing is subjected to an additional two passes through the lower radiator to further reduce the coolant temperature. From the lower radiator the coolant flows , via a hose, to the fuel cooler.

As the hot fuel cools, travelling slowly forwards through the cooler, it meets the progressively colder coolant travelling in the opposite direction from the lower radiator.

Viscous Fan Operation

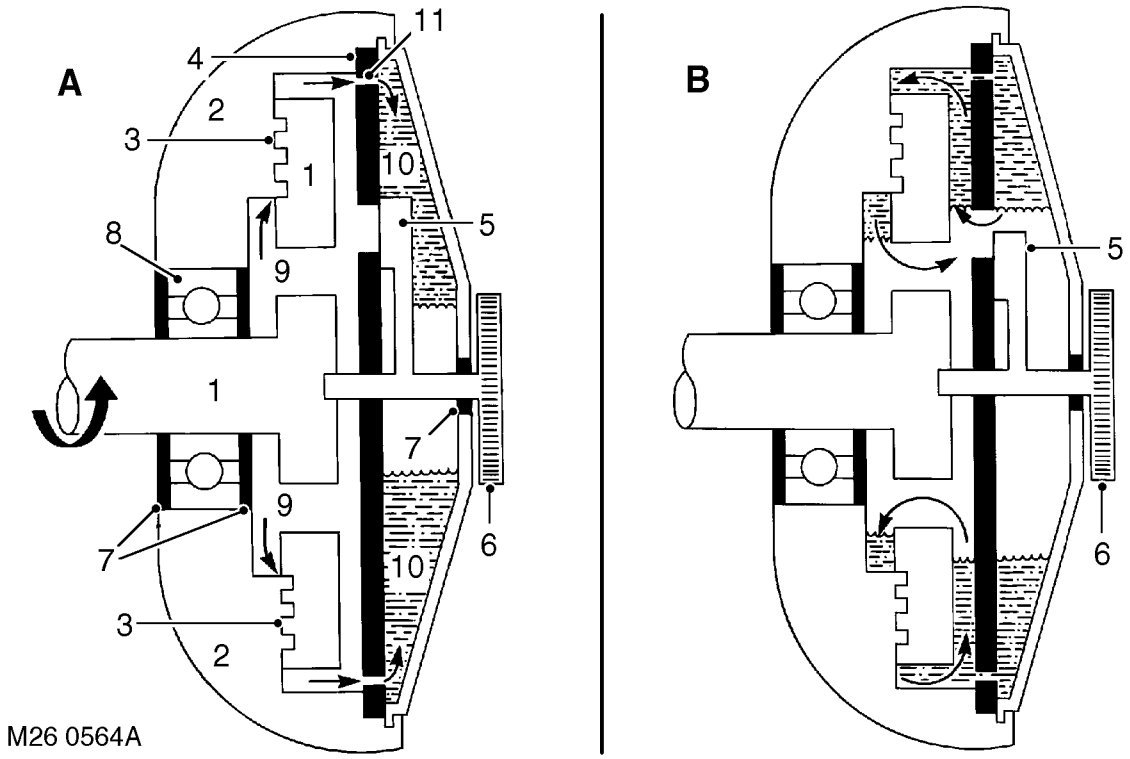

A = Cold
B = Hot

1. Drive plate
2. Fan body
3. Clearance
4. Valve plate
5. Valve
6. Bi-metallic coil
7. Fluid seals
8. Ball race
9. Fluid chamber
10. Reservoir
11. Return port

When the engine is off and the fan is not rotating, the silicone fluid stabilises within the fluid chamber and the reservoir. The fluid levels equalise due to the return port in the valve plate being open between the fluid chamber and the reservoir. In this condition, when the engine is started, silicone fluid is present in the fluid chamber and causes drag to occur between the drive plate and the body. This causes the fan to operate initially when the engine is started.

As the fan speed increases, centrifugal force and a scoop formed on the fluid chamber side of the valve plate, pushes the silicone fluid through the return port in the valve plate into the reservoir. As the fluid chamber empties, the drag between the drive plate and the body is reduced, causing the drive plate to slip. This reduces the rotational speed of the fan and allows it to ’freewheel’.

When the coolant temperature is low, the heat emitted from the radiator does not affect the bi-metallic coil. The valve remains closed, preventing fluid escaping from the reservoir into the fluid chamber. In this condition the fan will ’freewheel’ at a slow speed.

As the coolant temperature increases, the heat emitted from the radiator causes the bi-metallic coil to tighten. This movement of the coil moves the valve to which it is attached. The rotation of the valve exposes ports in the valve plate which allow the silicone fluid to spill into the fluid chamber. As the fluid flows into the clearance between the annular grooves in the drive plate and body, drag is created between the two components. The drag is due to the viscosity and shear qualities of the silicone fluid and causes the drive plate to rotate the body and fan blades.

As the coolant temperature decreases, the bi-metallic coil expands, rotating the valve and closing off the ports in the valve plate. When the valve is closed, centrifugal force pushes the silicone fluid through the return port, emptying the fluid chamber. As the fluid chamber empties, the drag between the drive plate and the body is reduced and the body slips on the drive plate, slowing the rotational speed of the fan.

DRAIN AND REFILL

Service repair no - 26.10.01

WARNING: Hot coolant

Drain

1. Remove engine acoustic cover.
2. Visually check engine and cooling system for signs of coolant leaks.
3. Examine hoses for signs of cracking, distortion and security of connections.
4. Position drain tray to collect coolant.

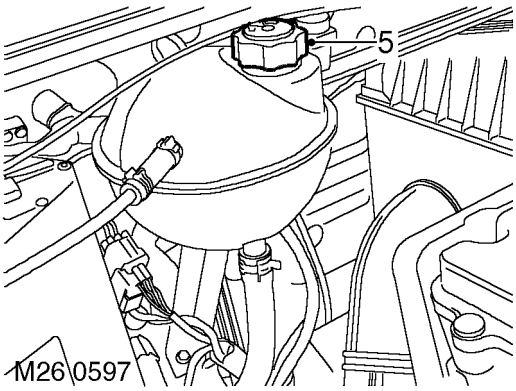

5. Remove expansion tank filler cap.
6. Loosen clip screws securing air inlet hose to intercooler and inlet manifold, release and remove hose.

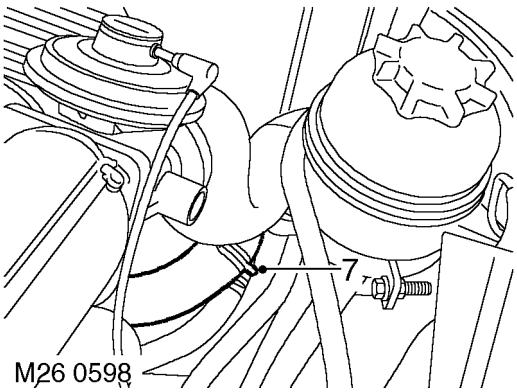

7. Release clip and disconnect bottom hose from radiator.
8. Allow cooling system to drain.
9. Disconnect bottom hose from radiator.

Refill

1. Flush system with water under low pressure.
2. Do not use water under high pressure as it could damage the radiator.
3. Connect bottom hose to radiator and secure hose with clip.
4. Prepare coolant to required concentration.
5. Position heater temperature control to maximum hot position.
6. Remove bleed screw from top hose.
7. Fill system slowly through coolant expansion tank until a steady flow of coolant is emitted from the bleed hole in top hose.
8. Fit bleed screw to top hose.
9. Continue filling system until coolant level reaches 'MAX' mark on expansion tank.
10. Fit expansion tank filler cap.
11. Position air intake hose and tighten clip screws.
12. Start and run engine until normal running temperature is reached.
13. If fitted, DO NOT operate air conditioning.
14. Switch off engine and allow to cool.
15. Check for leaks and top-up coolant to 'MAX' mark on expansion tank.

COUPLING - COOLING FAN

Service repair no - 26.25.19

Remove

1. Remove battery cover.
2. Disconnect battery negative lead.
3. Remove 3 bolts and remove engine acoustic cover.
4. Remove cooling fan cowl.

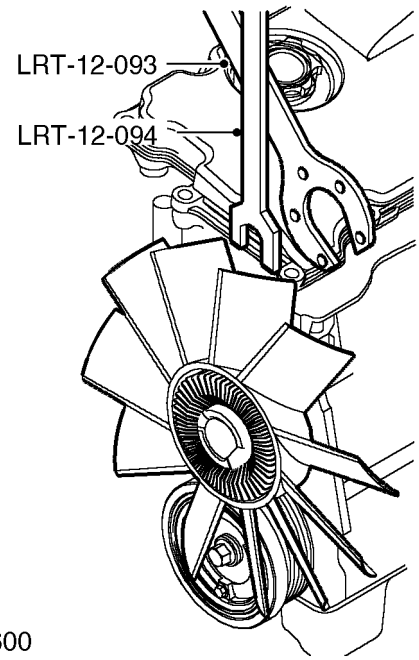

M26 0600

NOTE: Thread is RH.

5. Remove cooling fan using **LRT-12-093** and **LRT-12-094**.

Refit

6. Position cooling fan and tighten using **LRT-12-093** and **LRT-12-094**.
7. Fit cooling fan cowl.
8. Fit engine acoustic cover.
9. Reconnect battery negative lead.
10. Fit battery cover.

THERMOSTAT

Service repair no - 26.45.09

Remove

1. Drain cooling system. ***See Adjustment.***
2. Remove cooling fan. ***See this Section.***

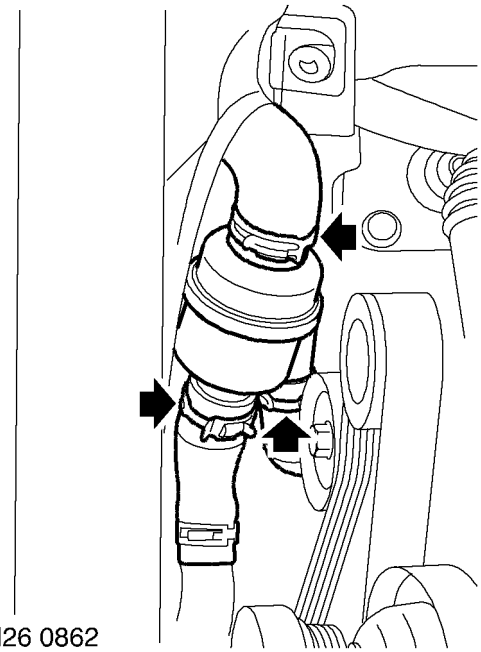

M26 0862

3. Release 3 clips and disconnect coolant hoses from thermostat.
4. Remove thermostat.

Refit

5. Position thermostat, connect hoses and secure with clips.
6. Fit cooling fan. ***See this Section.***
7. Fill cooling system. ***See Adjustment.***

PUMP - COOLANT

Service repair no - 26.50.01

Remove

1. Drain cooling system. ***See Adjustment.***
2. Remove centrifuge. ***See ENGINE , Repair.***

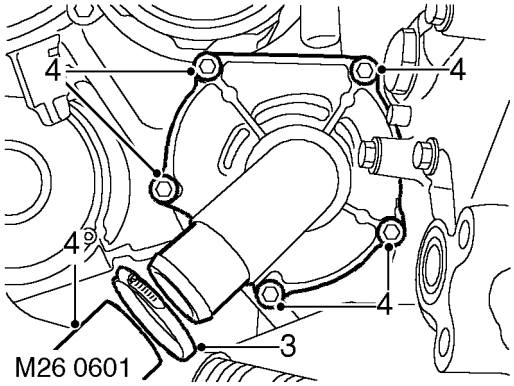

3. Release clip and hose from coolant pump cover.
4. Remove 5 bolts securing coolant pump cover.

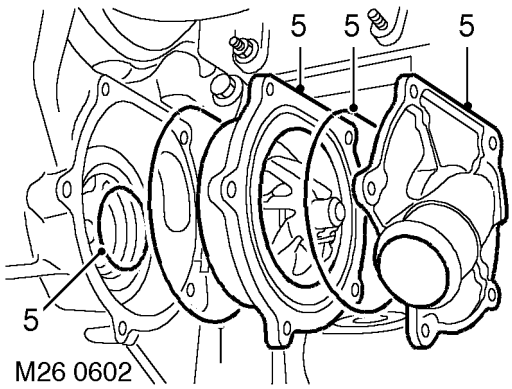

5. Remove cover and coolant pump from housing and discard 'O' rings.

Refit

6. Clean coolant pump housing and mating faces.
7. Fit new 'O' rings to coolant pump and cover.
8. Fit coolant pump and cover and tighten bolts to ***9 Nm (7 lbf.ft).***
9. Connect hose to pump cover and secure clip.
10. Refit centrifuge. ***See ENGINE , Repair.***
11. Refill cooling system. ***See Adjustment.***

RADIATOR

Service repair no - 26.40.01

Remove

1. Remove front grille. ***See CHASSIS AND BODY, Repair.***
2. Drain cooling system. ***See Adjustment.***
3. Remove cooling fan. ***See this Section.***

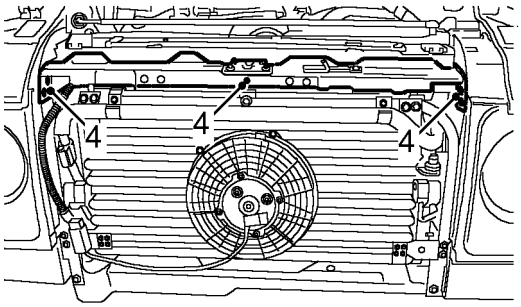

M26 0591

4. Remove 5 bolts and move bonnet platform aside.

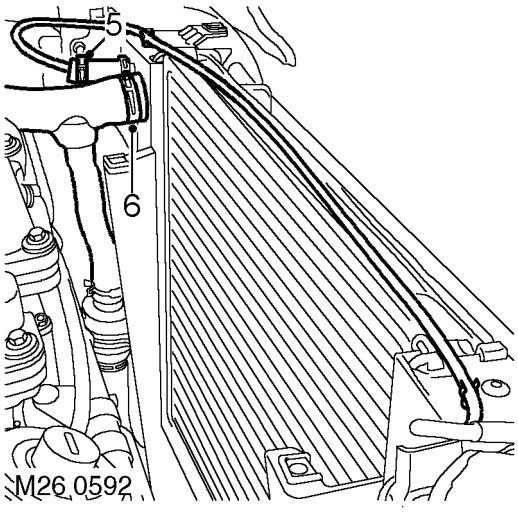

M26 0592

5. Release clip and disconnect bleed hose from radiator.
6. Release clip and disconnect top hose from radiator.

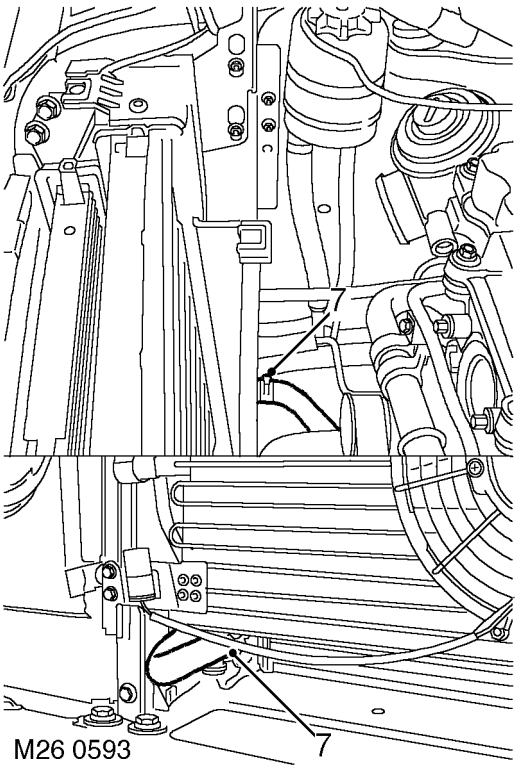

M26 0593

7. Release clip and disconnect fuel cooler hose from radiator.
8. Release clip and disconnect coolant rail hose from radiator.

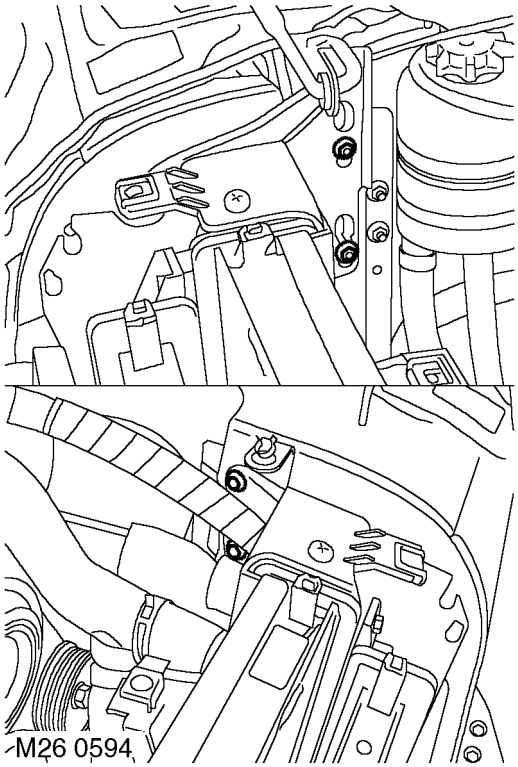
M26 0594

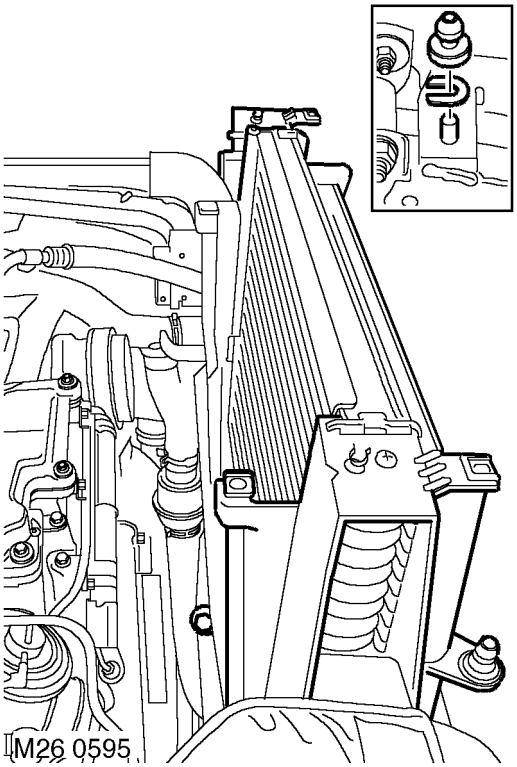
M26 0595

9. Remove 4 bolts securing RH and LH radiator mounting brackets to body and remove brackets.
10. Release clip and release air hose from turbocharger inlet pipe.
11. Release bottom hose from bracket on lower cooling fan cowl.
12. Remove radiator assembly and collect lower mounting spacers.

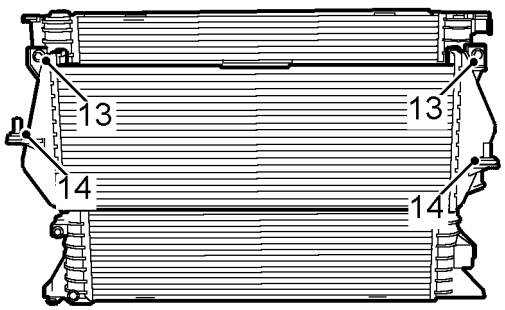

M26 0596

13. Remove 2 bolts and remove intercooler from radiator. Collect 2 nuts from radiator side brackets.
14. Remove 2 rubber mountings from intercooler.
15. Remove 2 screws and remove lower cooling fan cowl from radiator.
16. Remove 2 rubber mountings from bottom of radiator.

Refit

17. Fit rubber mountings to bottom of radiator.
18. Fit lower cooling fan cowl to radiator and secure with screws.
19. Fit nuts to radiator side brackets.
20. Position intercooler to radiator and tighten bolts.
21. Fit rubber mountings to intercooler.
22. Position mounting spacers and fit radiator.
23. Fit bottom hose into bracket on lower cooling fan cowl.
24. Position air hose to turbocharger pipe and secure with clip.
25. Position LH and RH radiator mounting brackets to body and radiator and tighten bolts.
26. Position coolant rail hose to radiator and secure with clip.
27. Position fuel cooler hose to radiator and secure with clip.
28. Position top hose to radiator and secure with clip.
29. Position bleed hose to radiator and secure with clip.
30. Position bonnet platform and tighten bolts.
31. Fit cooling fan. ***See this Section.***
32. Fit front grille. ***See CHASSIS AND BODY, Repair.***
33. Fill cooling system. ***See Adjustment.***

30 - MANIFOLD AND EXHAUST SYSTEM

CONTENTS

Page

DESCRIPTION AND OPERATION

MANIFOLD COMPONENT LAYOUT 1
DESCRIPTION 2

REPAIR

PIPE - EXHAUST - FRONT 1
SILENCER - INTERMEDIATE 2
EXHAUST - TAIL PIPE AND SILENCER 3
GASKET - INLET MANIFOLD 3
GASKET - EXHAUST MANIFOLD 5

MANIFOLD COMPONENT LAYOUT

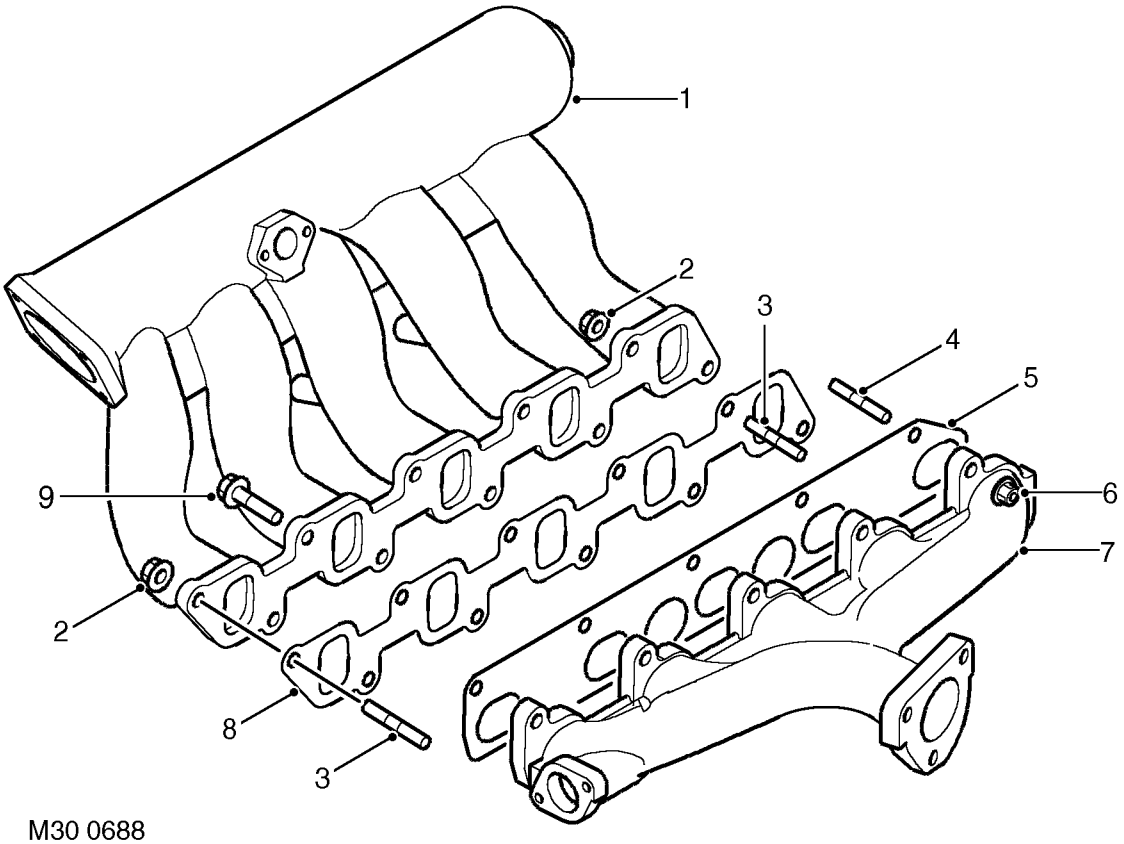

M30 0688

1. Inlet manifold
2. Flanged nut - 2 off
3. Stud - 2 off
4. Stud - 10 off
5. Exhaust gasket
6. Flanged nut - 10 off
7. Exhaust manifold
8. Inlet gasket
9. Flanged bolt - 8 off

DESCRIPTION

General

The diesel engine has the inlet manifold attached to the right hand side of the engine and the exhaust manifold attached to the left hand side of the engine. The inlet manifold directs cooled compressed air from the turbocharger and intercooler into the cylinders, where it is mixed with fuel from the injectors. Exhaust gases from the exhaust manifold can also be directed into the inlet manifold via a pipe from the exhaust manifold and an Exhaust Gas Recirculation (EGR) valve on the inlet manifold. The exhaust manifold allows combustion gases from the cylinders to leave the engine where they are directed into the exhaust system and turbocharger.

The exhaust system is attached to the turbocharger and is directed along the underside of the vehicle to emit exhaust gases from a tail pipe at the rear of the vehicle. A silencer is installed midway along the system and a second tail silencer is located at the rear of the vehicle.

Inlet manifold

The inlet manifold is a one piece aluminium casting. The manifold is secured to the cylinder head with two studs and flanged nuts and eight flanged bolts. A one piece laminated gasket seals the manifold to the cylinder head.

Four threaded bosses on the manifold provide for the attachment of the fuel cooler. The fuel cooler is secured to the manifold with four bolts. A boss with two threaded holes allows for the attachment of the combined intake air temperature/pressure sensor. The sensor is secured to the manifold with two screws and sealed with a gasket.

At the forward end of the manifold, a machined face and four threaded holes provide for the attachment of the EGR valve. The valve is sealed to the manifold with a gasket.

Exhaust manifold

The exhaust manifold is made from cast iron. The manifold has five ports, one from each cylinder, which merge into one flanged outlet connection positioned centrally on the manifold.

The manifold is attached to the cylinder head with ten studs and flanged nuts. A laminated metal gasket seals the manifold to the cylinder head. The flanged outlet on the manifold provides the attachment for the turbocharger, which is attached with three studs and flanged nuts and sealed with a metal laminated gasket.

A second flanged outlet, located at the forward end of the manifold, provides attachment for the EGR pipe. The EGR pipe is secured to the manifold with two cap screws and connected to the EGR valve mounted on the inlet manifold. There is no gasket used between the pipe and the exhaust manifold.

Exhaust system

The exhaust system comprises a front pipe, an intermediate pipe which incorporates a silencer and a tail pipe assembly which also has a silencer. The exhaust system is constructed mainly of 63 mm (2.48 in) diameter extruded pipe with a 1.5 mm (0.06 in) wall thickness. All pipes are aluminized to resist corrosion and the silencers are fabricated from stainless steel sheet.

Front pipe assembly
The front pipe is of welded and fabricated tubular construction. The front pipe is connected to a flange on the turbocharger and secured with three flanged nuts and sealed with a metal laminated gasket. The front pipe incorporates a flexible pipe near the connection with the turbocharger and terminates in a flanged connection with the intermediate pipe.

The flexible pipe is formed into a concertina shape with woven metal strands around its outer diameter. The flexible pipe allows for ease of exhaust system alignment and also absorbs engine vibration. The woven metal strands also increase the longevity of the flexible pipe.

The front pipe is attached via a bracket and a mounting rubber to the chassis. The mounting rubber allows ease of alignment and vibration absorption.

Intermediate pipe and silencer
The intermediate pipe is of welded and fabricated tubular construction. It connects at its forward end to the front pipe flange. Two captive studs on the intermediate pipe flange allow for attachment to the front pipe with locknuts. The rear section of intermediate pipe connects to the tail pipe assembly via a flanged joint, sealed with a metal gasket and secured with locknuts and studs.

The forward and rear sections are joined by a silencer. The silencer is fabricated from stainless steel sheet to form the body of the silencer. An end plate closes each end of the silencer and is attached to the body with seam joints. Perforated baffle tubes, inside the silencer, are connected to the inlet and outlet pipes on each end plate. Internal baffle plates support the baffle tubes and, together with a stainless steel fibre packing, absorb combustion noise as the exhaust gases pass through the silencer.

The intermediate pipe is attached by two brackets, positioned at each end of the silencer, and two mounting rubbers to the chassis. The mounting rubber allows for ease of alignment and vibration absorption.

Tail pipe assembly
The tail pipe is of welded and fabricated construction. The tail pipe connects to the intermediate pipe with a flanged joint secured with locknuts and sealed with a metal gasket. The pipe is shaped to locate above the rear axle allowing clearance for axle articulation. The pipe is also curved to clear the left hand side of the fuel tank which has a reflective shield to protect the tank from heat generated from the pipe.

A fabricated silencer is located at the rear of the tail pipe. The silencer is circular in section and is constructed from stainless steel sheet. A baffle tube is located inside the silencer and the space around the baffle tube is packed with a stainless steel fibre. The holes in the baffle tube allow the packing to further reduce combustion noise from the engine. The tail pipe from the silencer is curved downwards at the rear of the vehicle and directs exhaust gases towards the ground. The curved pipe allows the exhaust gases to be dissipated by the airflow under the vehicle and prevents the gases from being drawn behind the vehicle.

The tail pipe is attached by a bracket, positioned forward of the silencer, and a mounting rubber to the chassis. The mounting rubber allows ease of alignment and vibration absorption.

PIPE - EXHAUST - FRONT

Service repair no - 30.10.09

Remove

1. Remove engine acoustic cover. ***See ENGINE , Repair.***

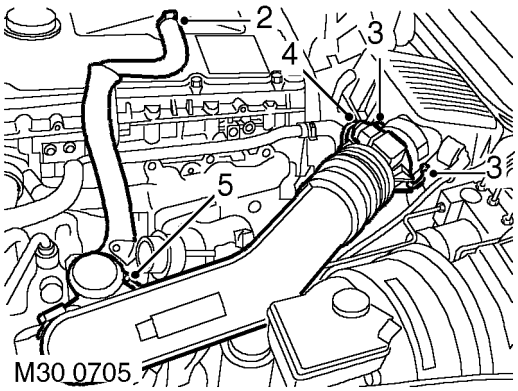

2. Release clip and disconnect breather hose from camshaft cover.
3. Release clips and disconnect air flow meter from air filter.
4. Disconnect multiplug from air flow meter.
5. Loosen clip screw and remove air inlet hose from turbocharger.

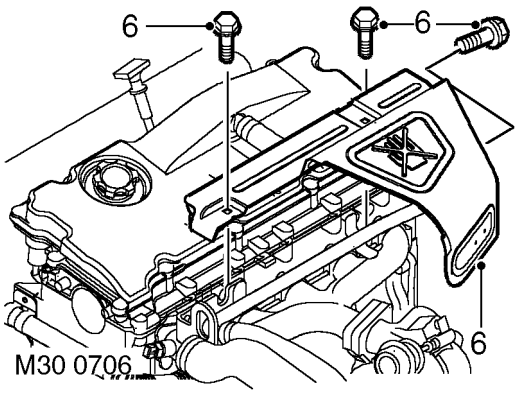

6. Remove 3 bolts and remove exhaust manifold heat shield.

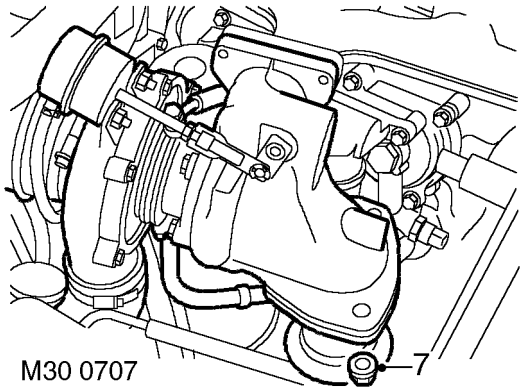

7. Remove 3 nuts, release front pipe from turbocharger and discard gasket.
8. Remove underbelly panel. ***See CHASSIS AND BODY, Repair.***

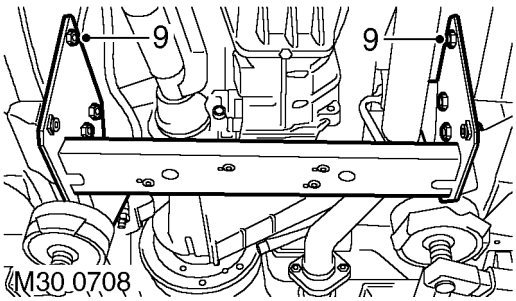

9. Remove 8 nuts and bolts and remove chassis cross member.

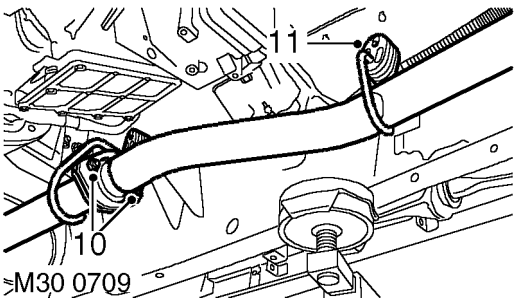

10. Remove 2 nuts, release front pipe from intermediate silencer.
11. Release front pipe from mounting rubber and remove pipe.

Refit

12. Clean front pipe and mating faces.
13. Position front pipe and using new gaskets, align to intermediate pipe and turbocharger.
14. Connect mounting rubber to front pipe.
15. Fit and tighten exhaust flange nuts to ***27 Nm (20 lbf.ft)*** .
16. Fit chassis cross member, and tighten bolts to ***45 Nm (33 lbf.ft)***
17. Fit underbelly panel. ***See CHASSIS AND BODY, Repair.***
18. Position new gasket and front pipe to turbocharger and tighten nuts to ***27 Nm (20 lbf.ft).***
19. Position exhaust manifold heat shield and tighten M6 bolts to ***10 Nm (7 lbf.ft)*** and M8 bolt to ***25 Nm(18 lbf.ft)*** .
20. Position air inlet hose to turbocharger and tighten clip screw.
21. Connect air flow meter to air filter and secure clips.
22. Connect air flow meter multiplug.
23. Connect breather hose and secure clip.
24. Fit engine acoustic cover. ***See ENGINE , Repair.***

SILENCER - INTERMEDIATE

Service repair no - 30.10.11

Remove

1. Raise vehicle on a 4 post ramp.

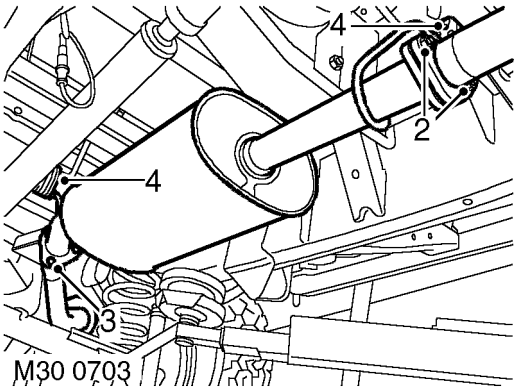

2. Remove 2 nuts securing intermediate silencer to front pipe.
3. Remove 3 nuts securing intermediate silencer to tail pipe.
4. Release intermediate silencer from rubber mountings and remove silencer.
5. Remove and discard gasket from tail pipe flange.

Refit

6. Clean intermediate silencer and mating faces.
7. Fit new gasket to tail pipe flange.
8. Position intermediate silencer to rubber mountings and tail pipe flange.
9. Fit nuts securing intermediate silencer to front pipe and tail pipe and tighten to ***25 Nm (18 lbf.ft).***

EXHAUST - TAIL PIPE AND SILENCER

Service repair no - 30.10.22

Remove

1. Raise vehicle on ramp.

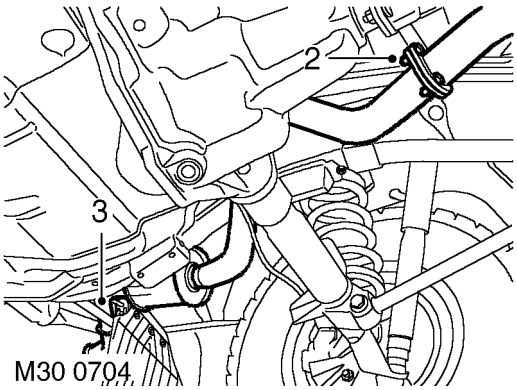

2. Remove 3 nuts securing silencer to tail pipe.
3. Release tail pipe from mounting and remove tail pipe.
4. Collect silencer to tail pipe gasket.

Refit

5. Clean silencer and tail pipe mating faces.
6. Position tail pipe and secure on mounting rubber.
7. Using a new gasket, align silencer to tail pipe.
8. Fit nuts to silencer and tighten to ***25 Nm (18 lbf.ft).***

GASKET - INLET MANIFOLD

Service repair no - 30.15.08

Remove

1. Remove battery cover.
2. Disconnect battery negative lead.
3. Remove 3 bolts and remove engine acoustic cover.
4. Release retainers and remove cooling fan cowl.

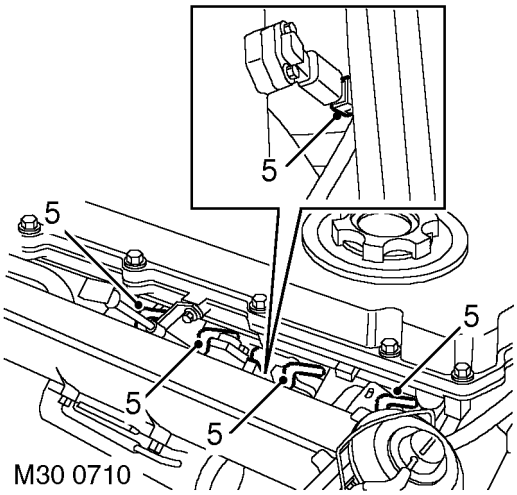

5. Disconnect multiplug from manifold air pressure sensor and release 4 glow plug leads.

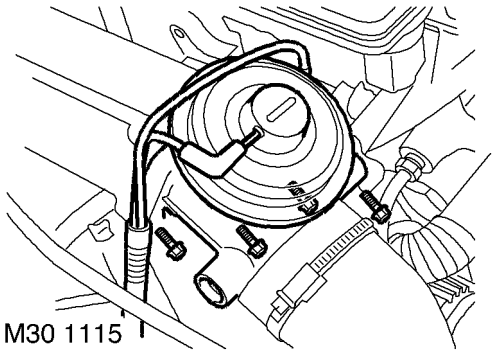

6. Remove 4 bolts, release EGR valve from inlet manifold and discard gasket.

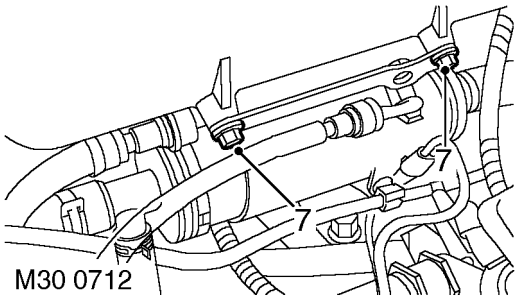

7. Remove 4 bolts securing fuel cooler to inlet manifold.

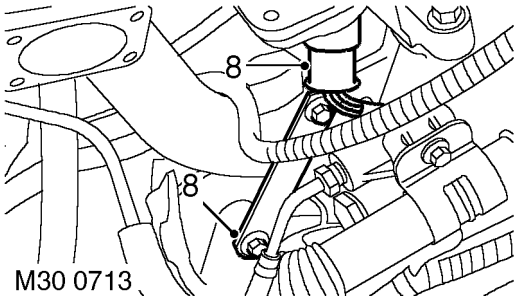

8. Remove 2 bolts and remove alternator support bracket and disconnect fuel injector harness multiplug.

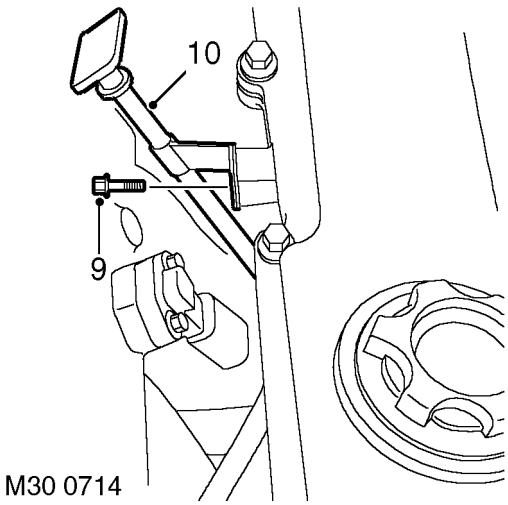

9. Remove bolt securing engine dip stick tube to camshaft carrier.
10. Remove dip stick tube and discard 'O' ring.

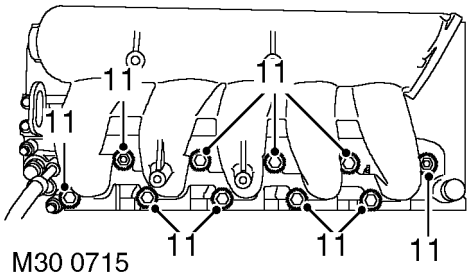

11. Remove 2 nuts and 8 bolts securing inlet manifold to cylinder head.

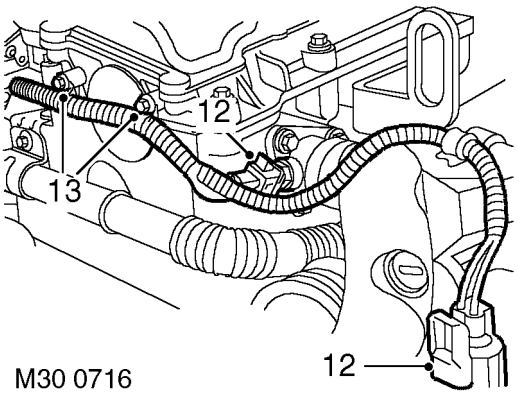

12. Disconnect multiplugs from turbocharger boost control soleniod, ECT sensor, ambient air pressure sensor, MAF sensor, and A/C compressor.

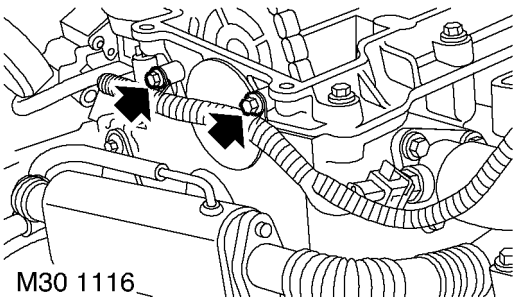

NOTE: EU3 Model illustrated.

13. Remove 2 bolts securing harness to camshaft carrier.
14. Release harness from engine and inlet manifold.
15. Remove inlet manifold and gasket.

Refit

16. Clean inlet manifold and mating face.
17. Fit new gasket.
18. Fit inlet manifold, and working from the centre outwards, tighten nuts and bolts to ***25 Nm (18 lbf.ft).***
19. Position harness to sensors and connect multiplugs.
20. Tighten harness clip bolts to camshaft carrier to ***10 Nm (7 lbf.ft).***
21. Clean dip stick tube and fit new 'O' ring.
22. Fit dip stick tube and tighten bolt to ***10 Nm (7 lbf.ft).***
23. Connect glow plug leads.
24. Fit alternator support bracket and tighten bolts to ***45 Nm (33 lbf.ft).***
25. Position fuel cooler. Apply Loctite 242 to bolts and tighten to ***18 Nm (13 lbf.ft).***
26. Fit new gasket, position EGR valve and tighten bolts to ***9 Nm (7 lbf.ft).***
27. Connect multiplug to MAP sensor.
28. Fit cooling fan cowl.
29. Fit engine acoustic cover.
30. Reconnect battery negative lead.
31. Fit battery cover.

GASKET - EXHAUST MANIFOLD

Service repair no - 30.15.12

Remove

1. Remove turbocharger. ***See FUEL SYSTEM, Repair.***
2. **Models with A/C:** Remove auxiliary drive belt. ***See ELECTRICAL, Repair.***

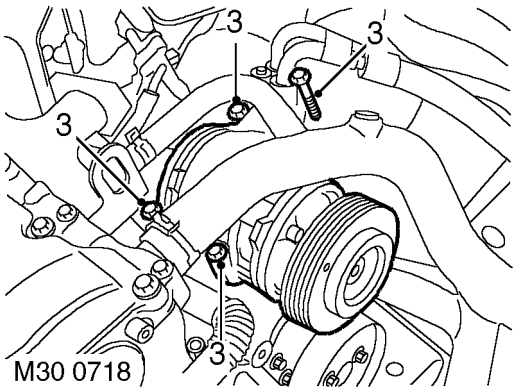

3. Remove 4 bolts securing compressor and move to one side.
   All Models

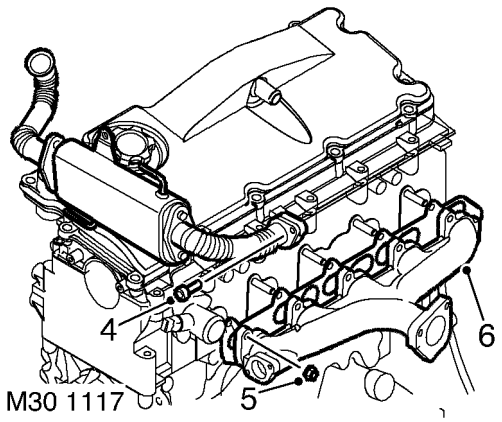

NOTE: EU3 Model illustrated.

4. Remove and discard 2 Allen screws securing EGR pipe to exhaust manifold.
5. Remove 10 nuts securing exhaust manifold to cylinder head.
6. Remove exhaust manifold and gasket.

Refit

7. Clean exhaust manifold and mating face.
8. Fit exhaust manifold with new gasket and tighten nuts to ***25 Nm (18 lbf.ft)*** .
9. **Models with A/C:** Position compressor and tighten bolts to ***25 Nm (18 lbf.ft).***

10. **All Models:** Position EGR valve pipe, fit new allen screws and tighten to ***10 Nm (7 lbf.ft).***
11. Fit turbocharger. ***See FUEL SYSTEM, Repair.***
12. **Models with A/C:** Fit auxiliary drive belt. ***See ELECTRICAL, Repair.***

33 - CLUTCH

CONTENTS

Page

DESCRIPTION AND OPERATION

CLUTCH COMPONENTS 2
HYDRAULIC OPERATION 4
DESCRIPTION 6
OPERATION 12

ADJUSTMENT

HYDRAULIC SYSTEM - BLEED 1

REPAIR

CLUTCH ASSEMBLY 1
BEARING - CLUTCH RELEASE 2
CLUTCH - MASTER CYLINDER LH DRIVE 2
CYLINDER - CLUTCH SLAVE 4

This page is intentionally left blank

CLUTCH COMPONENTS

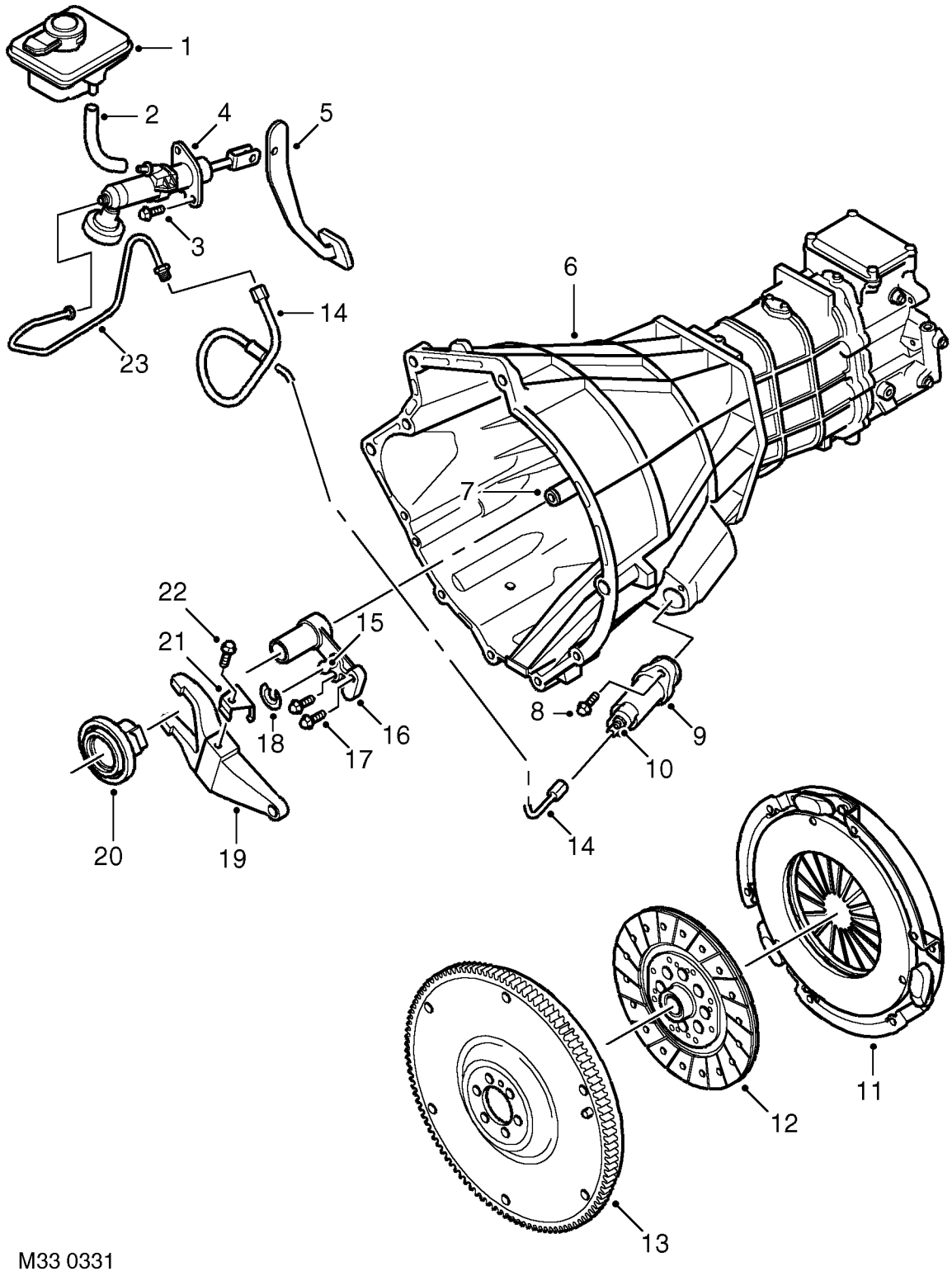

1. Brake/clutch reservoir
2. Connecting hose
3. Bolt - 2 off
4. Master cylinder
5. Clutch pedal
6. Gearbox housing
7. Primary driveshaft
8. Bolt - 2 off
9. Slave cylinder
10. Bleed nipple
11. Pressure plate
12. Drive plate
13. Dual mass flywheel
14. Metal hydraulic pipe
15. Ball spigot
16. Clutch release bearing sleeve
17. Bolt - 2 off
18. Pivot washer
19. Release lever
20. Release bearing
21. Retaining clip
22. Bolt
23. Plastic hydraulic pipe

HYDRAULIC OPERATION

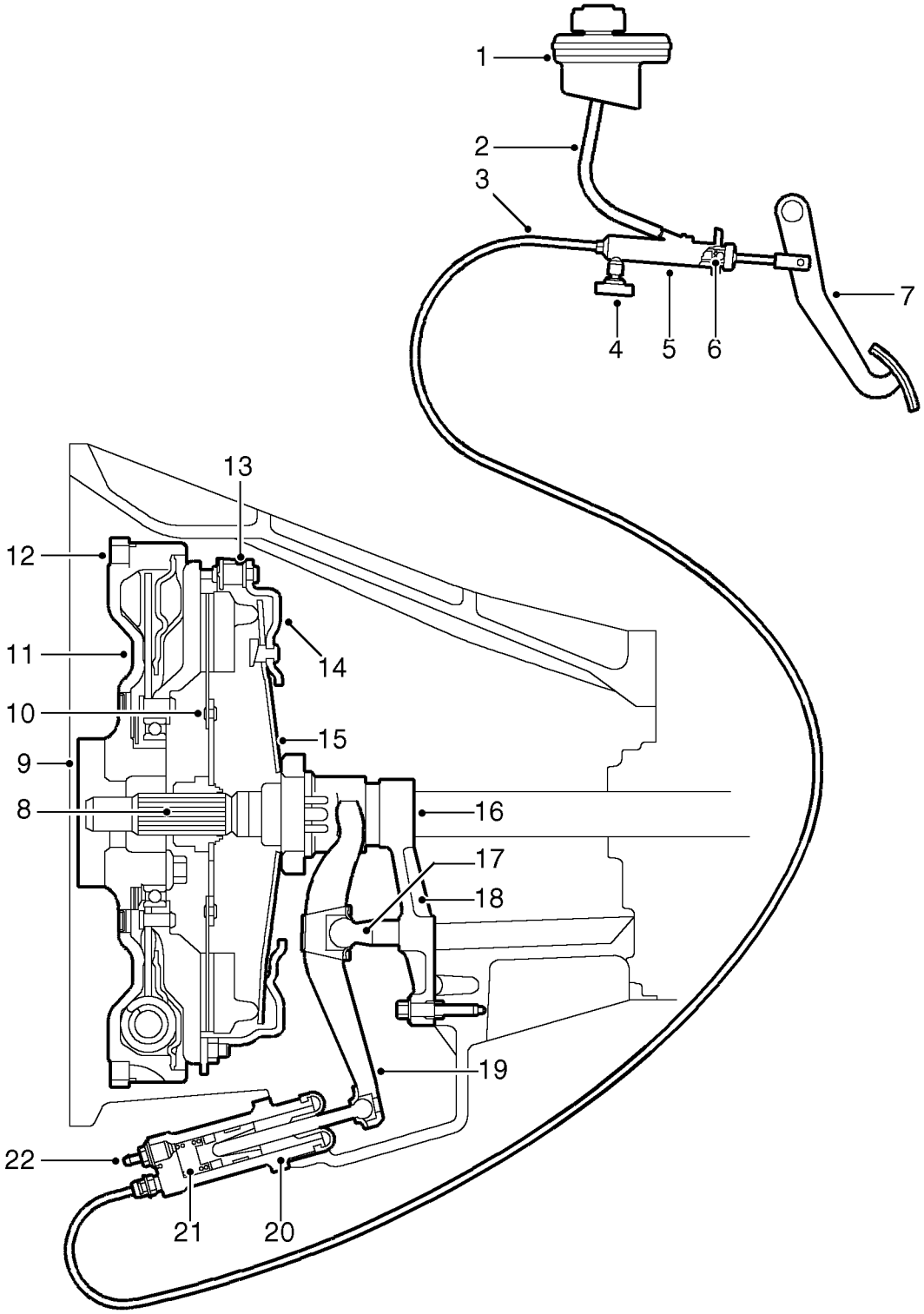

M33 0335

1. Brake/clutch reservoir
2. Fluid supply pipe
3. Hydraulic feed pipe
4. Damper
5. Master cylinder
6. Piston
7. Clutch pedal
8. Primary driveshaft
9. Engine crankshaft
10. Drive plate
11. Dual mass flywheel
12. Ring gear
13. Leaf spring
14. Cover - pressure plate
15. Diaphragm
16. Release bearing
17. Ball spigot
18. Release bearing sleeve
19. Release lever
20. Slave cylinder
21. Piston
22. Bleed nipple

DESCRIPTION

General

The clutch system is a diaphragm type clutch operated by a hydraulic cylinder. The drive plate is of the rigid centre type with no integral damping springs. The flywheel is of the dual mass type with damping springs integral with the flywheel. The clutch requires no adjustment to compensate for wear.

Hydraulic Clutch

The hydraulic clutch comprises a master cylinder, slave cylinder and a hydraulic reservoir. The master and slave cylinders are connected to each other hydraulically by plastic and metal pipes. The plastic section of the pipe allows ease of pipe routing and also absorbs engine movements and vibrations.

The master cylinder comprises a body with a central bore. Two ports in the body connect the bore to the hydraulic feed pipe to the slave cylinder and the fluid reservoir. The bore is also connected to a damper which prevents engine pulses being transferred hydraulically to the clutch pedal. A piston is fitted in the bore and has an external rod which is attached to the clutch pedal with a pin. Two coil springs on the clutch pedal reduce the effort required to depress the pedal.

The master cylinder is mounted on the bulkhead and secured with two bolts. The cylinder is connected to the shared brake/clutch reservoir on the brake servo by a braided connecting hose.

The slave cylinder is located on the left hand side of the gearbox housing and secured with two bolts. A heat shield is fitted to protect the underside of the slave cylinder from heat generated from the exhaust system. The slave cylinder comprises a cylinder with a piston and a rod. A port in the cylinder body provides the attachment for the hydraulic feed pipe from the master cylinder. A second port is fitted witha bleed nipple used for removing air from the hydraulic system after servicing. The piston rod locates on a clutch release lever located in the gearbox housing. The rod is positively retained on the release lever with a clip.

Clutch Mechanism

The clutch mechanism comprises a flywheel, drive plate, pressure plate, release lever and a release bearing. The clutch mechanism is fully enclosed at the rear of the engine by the gearbox housing.

A clutch release bearing sleeve is attached in the gearbox housing with two bolts and located on two dowels. A spigot with a ball end is formed on the release bearing sleeve and provides a mounting and pivot point for the clutch release lever. A dished pivot washer is located on the ball of the spigot. When the release lever is located on the ball, the pivot washer seats against the rear face of the release lever. A spring clip is located on the lever and the pivot washer and secures the lever on the spigot. A small bolt retains the spring clip in position.

The release lever is forked at its inner end and locates on the clutch release bearing carrier. The outer end of the release lever has a nylon seat which locates the slave cylinder piston rod. A second nylon seat, positioned centrally on the release lever, locates on the ball spigot of the release bearing sleeve and allows the release lever to pivot freely around the ball.

The clutch release bearing locates on the clutch release lever and release bearing sleeve. The bearing is retained on a carrier which has two flats to prevent the carrier rotating on the release lever. A clip retains the release lever on the carrier. The bearing and carrier are not serviceable individually.

Dual Mass Flywheel

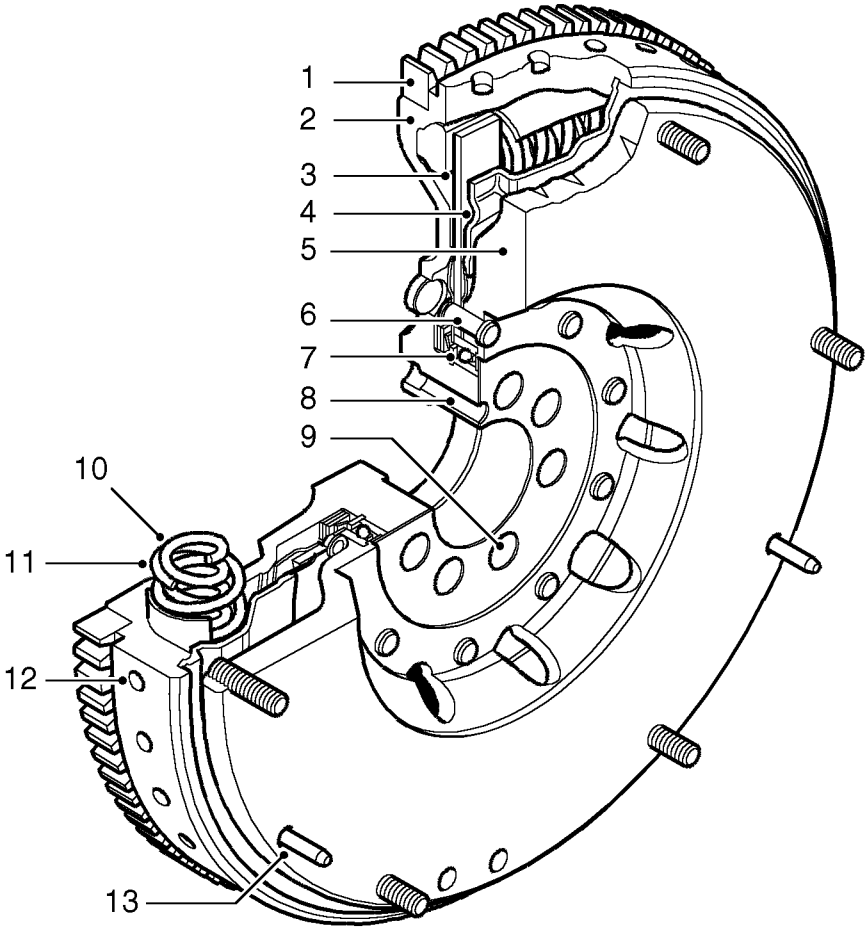

M33 0334

1. Ring gear
2. Primary flywheel
3. Inner drive plate
4. Spring housing
5. Secondary flywheel
6. Rivet
7. Ball bearing
8. Dowel location hole
9. Mounting hole
10. Inner spring
11. Outer spring
12. Crankshaft position sensing holes
13. Pressure plate locating dowel

The dual mass flywheel is bolted on the rear of the crankshaft with eight bolts. A dowel on the crankshaft flange ensures that the flywheel is correctly located. A ring gear is fitted on the outer diameter of the flywheel. The ring gear is not serviceable. Thirty blind holes are drilled in the outer diameter of the flywheel adjacent to the ring gear. The holes are positioned at 10° intervals with four 20° spaces. The holes are used by the crankshaft position sensor for engine management.

The dual mass flywheel is used to insulate the gearbox from torsional and transient vibrations produced by the engine. The flywheel comprises primary and secondary flywheels with the drive between the two transferred by a torsional damper which comprises four coil springs. The springs are located in the inside diameter of the primary flywheel. Two of the springs are of smaller diameter and fit inside the larger diameter springs.

The primary flywheel locates the ring gear and is attached to the crankshaft flange with eight bolts. The two pairs of coil springs are located in a recess in the flywheel between two riveted retainers. A roller bearing is pressed onto the central boss of the primary flywheel and retained with a riveted plate. The bearing provides the mounting for the secondary flywheel.

The secondary flywheel comprises two parts; an outer flywheel which provides the friction surface for the clutch drive plate and an inner drive plate which transfers the drive from the primary flywheel, via the coil springs, to the outer flywheel. The two components of the secondary flywheel are secured to each other with rivets. The inner drive plate is located between the two pairs of coil springs and can rotate on the ball bearing in either direction against the combined compression force of the four coil springs. Under high torque loading conditions the secondary flywheel can rotate in either direction up to 70° in relation to the primary flywheel.

The operating face of the secondary flywheel is machined to provide a smooth surface for the drive plate to engage on. Three dowels and six studs and nuts provide for the location and attachment of the pressure plate.

Pressure plate

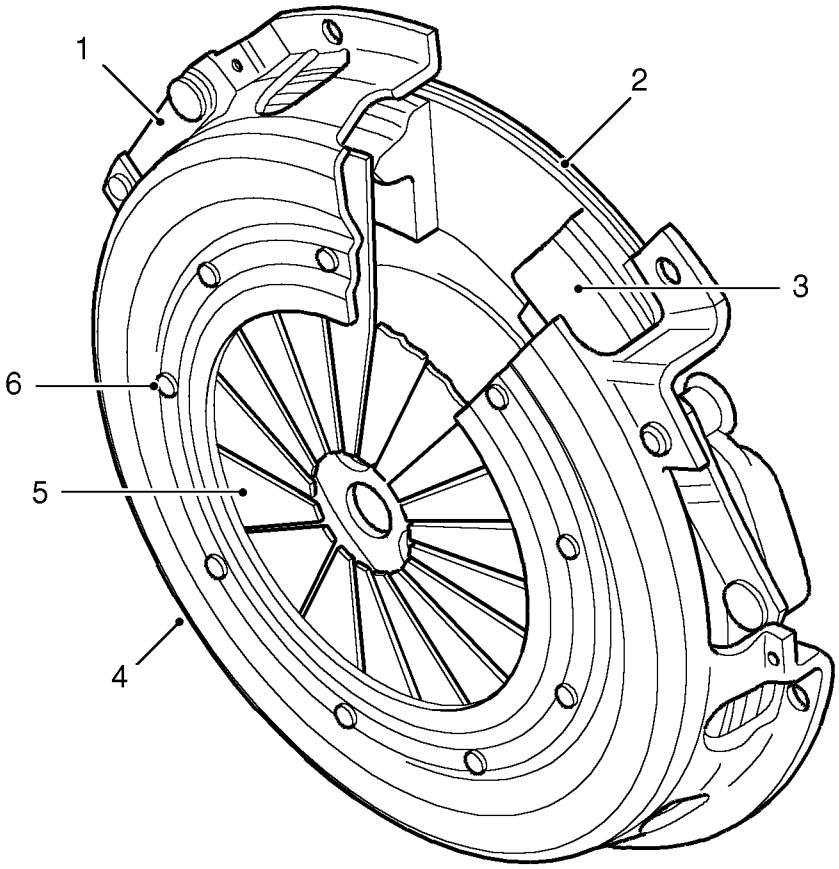

M33 0332

1. Leaf spring
2. Drive plate
3. Pressure plate
4. Cover
5. Diaphragm
6. Rivet

The pressure plate assembly comprises a pressure plate, cover and diaphragm and is mounted on and rotates with the dual mass flywheel.

The pressure plate is forged from cast iron and machined to provide a smooth surface for the drive plate to engage on. Three lugs on the outer diameter of the pressure plate connect it via three leaf spring to the cover. The leaf springs have three tempered steel leaves which assist in pulling the pressure plate away from the drive plate when the clutch pedal is depressed.

The cover is made from pressed steel and houses all pressure plate components. Shouldered rivets support the diaphragm inside the cover. The rivets heads are chamfered to allow the diaphragm to pivot when pressure is applied to it by the release bearing. Three holes in the cover locate on the dowels on the flywheel and six further holes provide for the attachment of the cover to the flywheel with six nuts. Larger holes in the cover provide ventilation for the drive plate and pressure plate and flywheel contact surfaces.

The diaphragm comprises a cast ring with eighteen fingers. The diaphragm is attached to the cover with nine shouldered rivets. The inner head of each rivet is chamfered to allow the diaphragm to pivot when the clutch is depressed or released. When pressure is applied to the fingers of the diaphragm by the release bearing, the diaphragm pivots on the rivets and moves away from the pressure plate, releasing the force applied to the pressure plate and allowing the drive plate to slip between the pressure plate and the flywheel.

Drive plate

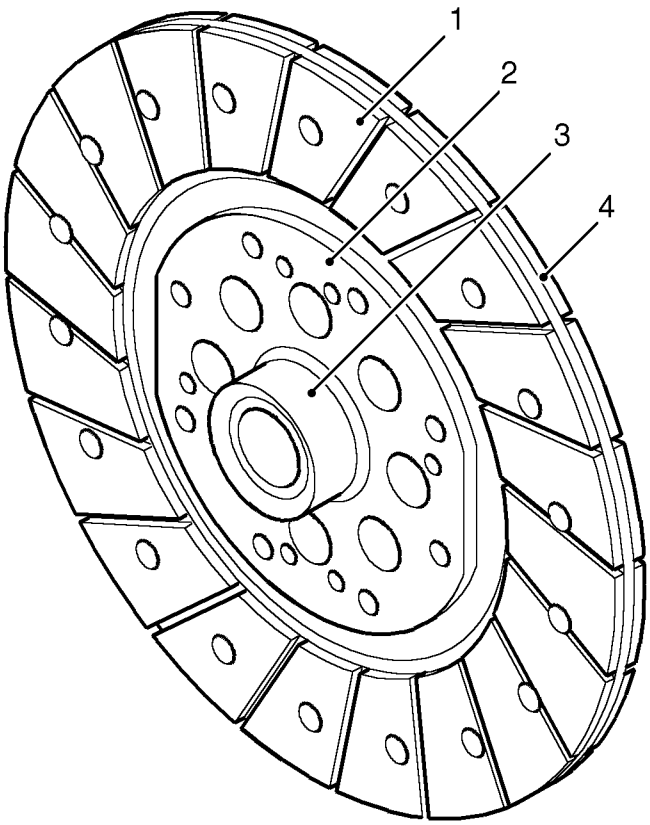

M33 0333

1. Friction material
2. Inner plate
3. Hub
4. Spring steel plate

The drive plate is of the rigid centre type and is sandwiched between the flywheel and the pressure plate. The drive plate has a splined hub which engages with the splines on the primary drive shaft from the gearbox. The hub is attached to an inner plate which is pressed onto the hub. A spring steel plate is riveted to the inner plate with eight rivets and provides the attachment surface for the drive plate friction material. The spring steel plate allows some axial compliance and contributes to smooth clutch operation. The friction material comprises two 267 mm (10.5 in.) discs which are secured with rivets to each side of the spring steel plate. The rivets are installed through recessed holes in the disc and emerge in recessed holes in the opposite disc.

OPERATION

Hydraulic operation

When the clutch pedal is depressed, the master cylinder piston is pushed into the master cylinder. The movement of the piston pressurises the fluid in the master cylinder, forcing the pressurised fluid into the hydraulic feed pipe to the slave cylinder. The hydraulic pressure is felt at the slave cylinder piston which moves under the hydraulic force applied, pushing the clutch release lever via the piston rod.

When the clutch pedal is released, the force applied to the release lever by the fingers of the diaphragm, moves the release lever, which pushes the slave cylinder piston into the cylinder. The displaced hydraulic fluid is pushed up the hydraulic feed pipe and returns to the master cylinder.

Mechanism operation

When the clutch pedal is depressed, hydraulic pressure extends the piston and rod in the slave cylinder. The extension of the piston pushes the rod against the outer end of the release lever which pivots around the ball spigot.

The inner end of the release lever pivots towards the engine applying pressure to the release bearing. The release bearing slides along the release bearing sleeve and pushes on the fingers of the diaphragm. The diaphragm pivots around the chamfered rivets in the cover. As the diaphragm is deflected, it removes pressure from the pressure plate. The pressure plate moves away from the drive plate assisted by the three leaf springs.

The removal of force from the pressure plate on the drive plate reduces the friction between the dual mass flywheel, drive plate and pressure plate. The drive plate slips between the flywheel and the pressure plate preventing rotary movement being transferred from the flywheel and pressure plate to the primary driveshaft.

When the clutch pedal is released, hydraulic force is removed from the piston in the slave cylinder. This allows the fingers of the diaphragm to push the release bearing along the release bearing sleeve. The movement of the release bearing moves the release lever which pivots on the ball spigot, pushing the piston and rod back into the slave cylinder.

The removal of pressure from the release bearing on the diaphragm, causes the diaphragm to pivot around the chamfered rivets in the cover. The force applied to the pressure plate from the diaphragm overcomes the force of the leaf springs and the pressure plate moves towards the drive plate and flywheel.

The pressure plate applies pressure to the drive plate which is pushed against the flywheel. As the clutch pedal is progressively released, the friction between the drive plate, flywheel and pressure plate increases. The increase in friction transfers the rotary movement of the flywheel and pressure plate to the drive plate, which in turn starts to rotate the primary drive shaft. When the clutch pedal is released fully, the force applied by the diaphragm to the pressure plate forces the drive plate onto the flywheel with no slippage.

HYDRAULIC SYSTEM - BLEED

Service repair no - 33.15.01

Check

CAUTION: Ensure the fluid in the reservoir is maintained between the minimum and maximum levels throughout the bleed procedure using new brake fluid.

CAUTION: Brake fluid will damage paint finished surfaces. If spilled, immediately remove fluid and clean area with water.

1. Top up clutch system reservoir.
2. Raise front of vehicle and support on stands.

WARNING: Do not work on or under a vehicle supported only by a jack. Always support the vehicle on safety stands.

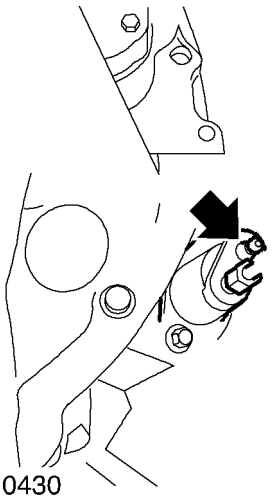

M33 0430

3. Remove dust cap, connect bleed tube to bleed screw and submerge free end into a clear container of brake fluid.
4. Loosen bleed screw, then apply steady pressure to the clutch pedal, depressing it through its full stroke. Allow the pedal to return unassisted.
5. Repeat the procedure until a flow of clean, air-free fluid is purged into the container.
6. Hold pedal down and tighten bleed screw to ***9 Nm (7 lbf.ft).***
7. Check and top up reservoir.

CAUTION: Never re-use fluid that has been bled from the system.

8. Remove stands and lower vehicle.

CLUTCH ASSEMBLY

Service repair no - 33.10.01.01

Remove

1. Remove gearbox assembly. ***See MANUAL GEARBOX, Repair.***
2. Restrain flywheel.

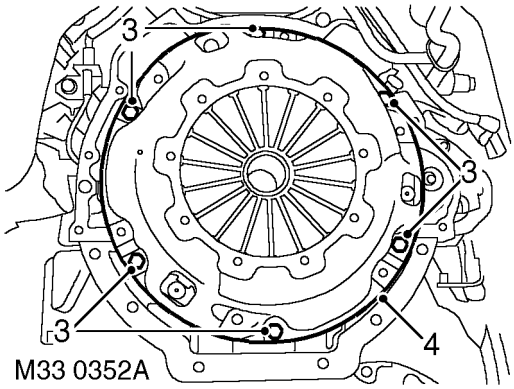

3. Working in sequence, loosen 6 nuts securing clutch cover to flywheel.
4. Remove clutch cover and clutch plate.

Refit

5. Clean clutch cover and flywheel mating faces and spigot bush in end of crankshaft.
6. Position clutch drive plate to flywheel with 'gearbox side' facing towards gearbox.

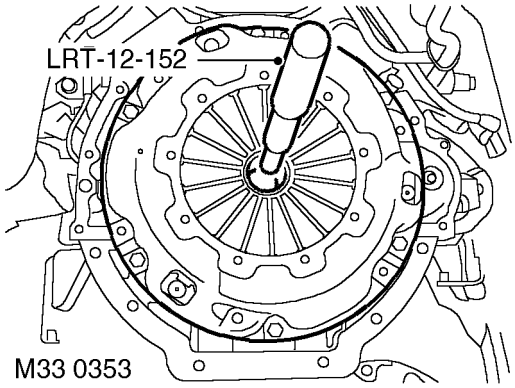

7. Position **LRT-12-152** alignment tool through drive plate into spigot bearing in crankshaft.
8. Fit clutch cover and locate on dowels.
9. Position clutch cover nuts and tighten in diagonal sequence to ***25 Nm (18 lbf.ft).***
10. Fit gearbox assembly. ***See MANUAL GEARBOX, Repair.***

BEARING - CLUTCH RELEASE

Service repair no - 33.25.12

Remove

1. Remove gearbox assembly. ***See MANUAL GEARBOX, Repair.***

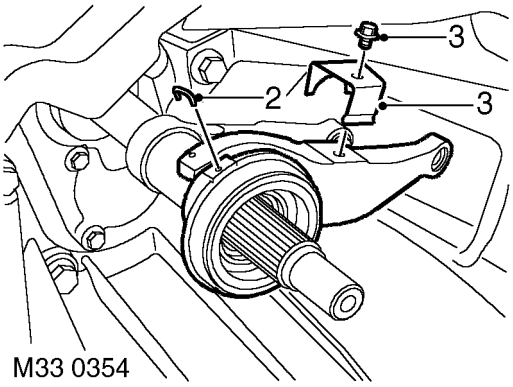

2. Remove retaining peg and remove release bearing.
3. Remove bolt securing clutch release fork, remove retaining clip and remove clutch release fork.

Refit

4. Clean release fork.
5. Examine clutch release fork pivot points for wear.
6. Apply a smear of Molybdenum disulphide grease to release fork pivot points.
7. Fit retaining clip ensuring it locates over pivot point washer.
8. Fit bolt and tighten to ***10 Nm (7 lbf.ft).***
9. Clean release bearing and bearing sleeve mating faces.
10. Apply smear of Molybdenum disulphide grease to release bearing sleeve.
11. Fit release bearing and secure with retaining peg.
12. Fit gearbox assembly. ***See MANUAL GEARBOX, Repair.***

CLUTCH - MASTER CYLINDER LH DRIVE

Service repair no - 33.20.01

Remove

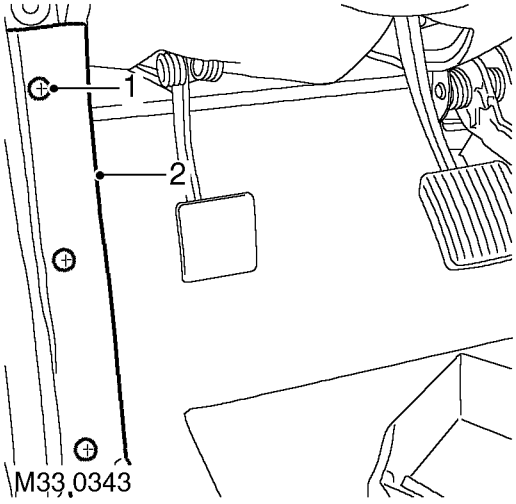

1. Remove 3 screws securing closing panel to lower 'A' post.
2. Release closing panel sufficient to gain access to clutch and brake pedal bracket bolts.
3. Remove clutch pedal rubber.

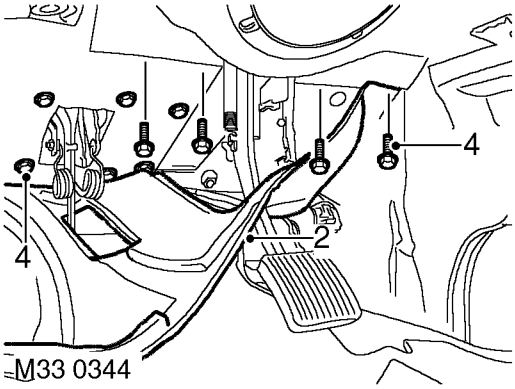

4. Remove 12 bolts securing clutch and brake pedal brackets to body.

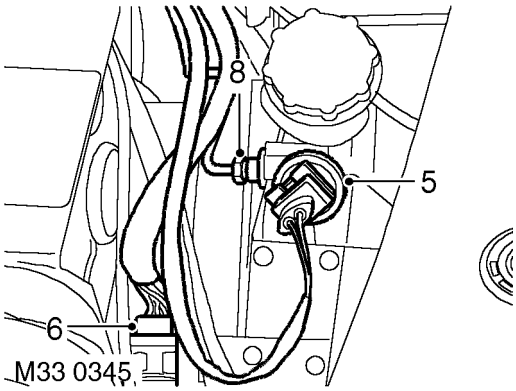

5. Disconnect multiplug from clutch pedal sensor.
6. Disconnect muliplug and harness clip from pedal bracket.
7. Position cloth to collect fluid spillage.
8. Loosen pipe union, release pipe and plug pipe and master cylinder.
9. Move brake master cylinder assembly aside and lift out clutch master cylinder assembly.

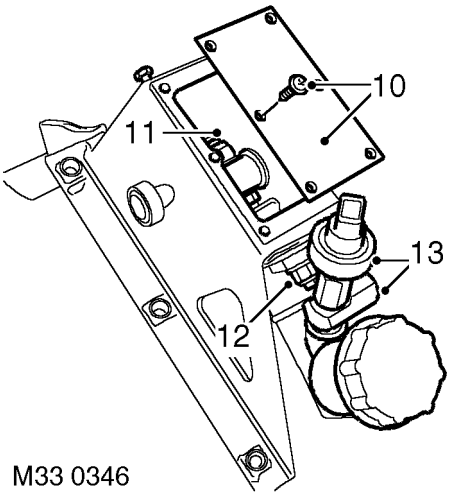

10. Remove 6 screws, remove pedal box top cover and discard gasket.
11. Remove nut securing push rod to clutch pedal trunnion.
12. Remove 2 bolts and remove clutch master cylinder from pedal bracket.
13. Remove clutch pedal sensor and pipe union from master cylinder and discard sealing washers.

Refit

14. Clean sensor and pipe union.
15. Fit clutch pedal sensor and pipe to master cylinder using new sealing washers.
16. Position master cylinder to pedal bracket and align push rod to pedal trunnion.
17. Fit bolts and nuts and secure master cylinder to pedal bracket.
18. Fit nut securing push rod to clutch pedal trunnion but do not tighten nut at this stage.
19. Move brake master cylinder aside and position clutch master cylinder assembly.
20. Clean clutch pipe union.
21. Align pipe and tighten union.
22. Connect multiplug to clutch pedal sensor.
23. Tighten bolts securing clutch pedal and brake pedal brackets to body.
24. Fit clutch pedal rubber.
25. Position closing panel and tighten screws to lower ’A’ post.

Clutch pedal setting

1. Loosen both locknuts on master cylinder push rod.
2. Check distance from lower edge of clutch pedal to floor. Correct measurement is 140 mm (5.50 in) without floor mat.
3. Adjust pedal stop to obtain correct setting.
4. Adjust master cylinder push rod to obtain approximately 1.5 mm (0.06 in) free play between push rod and master cylinder piston.
5. Tighten push rod locknuts.
6. Check operation of clutch pedal and ensure that there is minimum of 6 mm (0.25in) of free play before pressure is felt.
7. Fit pedal box top cover and multiplug bracket using a new gasket and secure with screws.
8. Connect multiplug and harness clip to pedal bracket.
9. Bleed clutch hydraulic system. ***See Adjustment.***

CYLINDER - CLUTCH SLAVE

Service repair no - 33.35.01

Remove

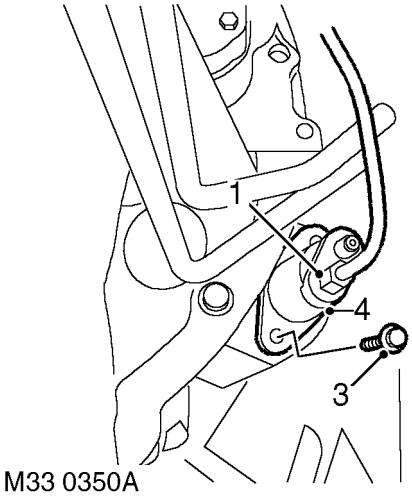

1. Disconnect pipe from slave cylinder.

CAUTION: Plug the connections.

2. Position container to catch spillage.
3. Remove 2 bolts securing slave cylinder to bell housing.
4. Withdraw slave cylinder from bell housing and push rod.

Refit

5. Clean ends of pipes, bell housing and slave cylinder mating faces.
6. Lubricate end of push rod with Molybdenum disulphide gease.
7. Locate slave cylinder to push rod and bell housing.
8. Fit bolts and tighten to ***25 Nm (18 lbf.ft).***
9. Connect clutch pipe to slave clyinder.
10. Bleed clutch system. ***See Adjustment.***

37 - MANUAL GEARBOX

CONTENTS

Page

ADJUSTMENT

SPRINGS - GEAR LEVER BIAS 1
GEARBOX OIL - DRAIN AND REFILL 2

REPAIR

COVER - FRONT - RESEAL AND FIT NEW INPUT SHAFT OIL SEAL 1
LEVER - GEAR CHANGE 3
MECHANISM AND HOUSING - GEAR SELECTOR 4
MECHANISM AND HOUSING - GEAR SELECTOR - RESEAL 6
GEARBOX 7
SWITCH - REVERSE LIGHT 12

SPRINGS - GEAR LEVER BIAS

Service repair no - 37.16.26

Check

NOTE: The purpose of this adjustment is to set both bolts so that the bias spring legs apply equal pressure on both ends of the gear lever cross pin when 3rd or 4th gear is engaged. This will ensure that when the gear lever is in neutral, the gear change mechanism is automatically aligned for 3rd or 4th gears.

1. Remove gear lever knobs.
2. Release and remove gear lever gaiter.
3. Select 3rd or 4th gear.

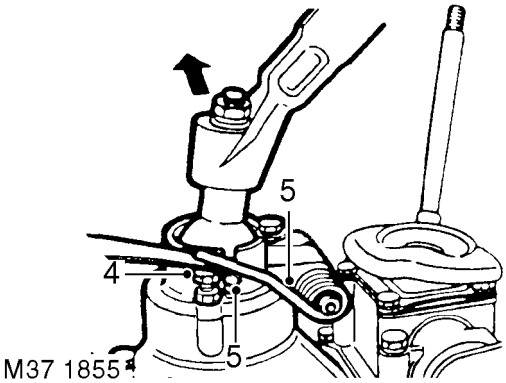

4. Adjust the two adjusting screws until both legs of the spring are approximately 0.5 mm (0.02 in) clear of cross pin in the gear lever.
5. Apply a light load to the gear lever in a RH direction and adjust the LH adjusting screw downwards until the LH spring leg just makes contact with the cross pin.
6. Repeat the same procedure for the RH adjusting screw.
7. Lower both adjusting screws equal amounts until the radial play is just eliminated. Tighten lock nuts.
8. Return gear lever to neutral position and move gear lever across the gate several times. The gear lever should return to the 3rd and 4th gate.
9. Fit gear lever gaiter.
10. Fit gear lever knobs.

GEARBOX OIL - DRAIN AND REFILL

Service repair no - 37.24.01

Drain

1. The oil should be drained when the gearbox is warm and the vehicle is standing on a level surface.

WARNING: Observe due care when draining gearbox as oil can be very hot.

2. Raise vehicle on ramp.
3. Position container to collect oil.
4. Clean area around filler/level plug.

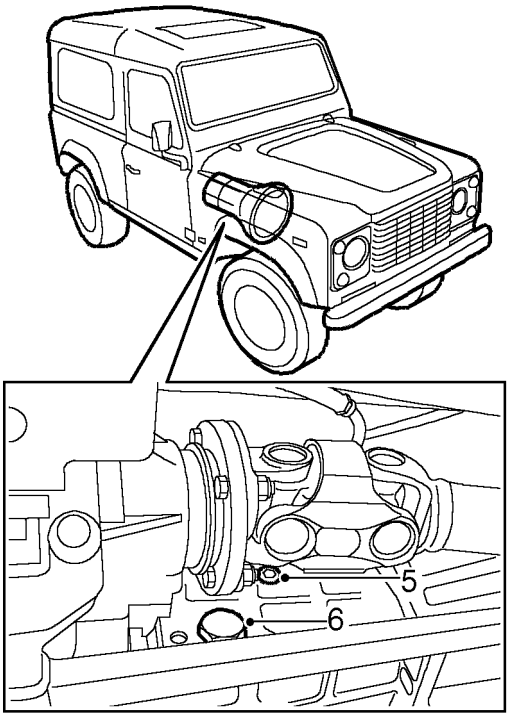

M37 1441

5. Remove filler/level plug.

NOTE: Later gearboxes: Use No. 55 Torx bit to remove filler/level plug.

6. Remove gearbox drain plug and discard sealing washer.

Refill

1. Clean gearbox drain plug and fit new sealing washer.
2. Fit gearbox drain plug and tighten to ***50 Nm (36 lbf.ft).***
3. Fill gearbox with correct grade of oil. ***See LUBRICANTS, FLUIDS AND CAPACITIES, Information.***
4. Apply Loctite 290 to the filler/level plug and tighten to ***30 Nm (22 lbf.ft).***
5. Remove fluid container.
6. Lower vehicle on ramp.

COVER - FRONT - RESEAL AND FIT NEW INPUT SHAFT OIL SEAL

Service repair no - 37.12.33.01

Remove

1. Remove gearbox. ***See this Section.***

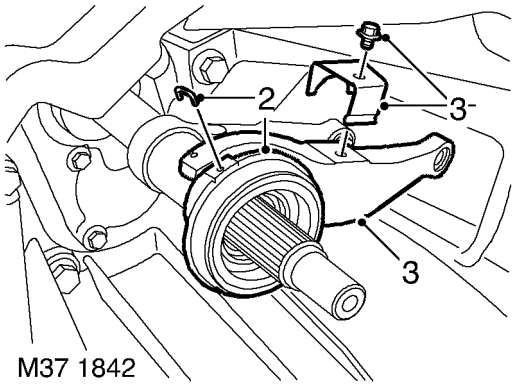

2. Remove retaining peg and remove release bearing.
3. Remove bolt securing clutch release fork, remove retaining clip and remove clutch release fork.

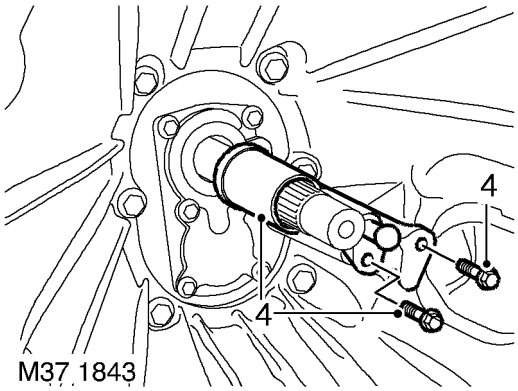

4. Remove 2 bolts securing release bearing sleeve, remove bearing sleeve.

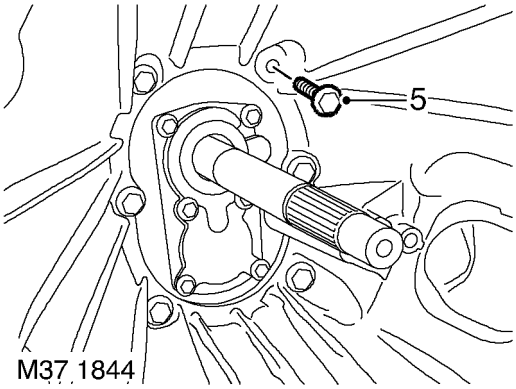

5. Remove 6 bolts securing clutch housing, remove housing.

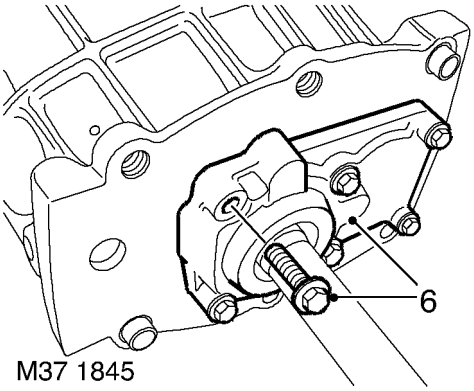

6. Remove and discard 6 bolts securing front cover, remove cover.

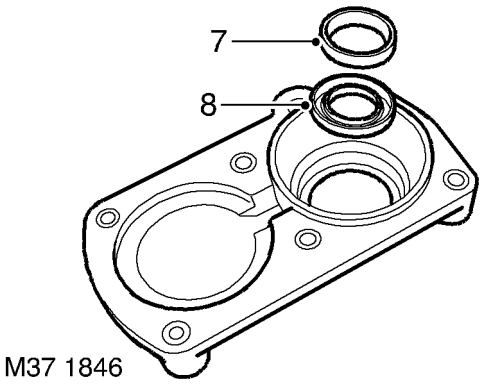

7. Using a soft metal drift, carefully remove input shaft front bearing track from front cover.

CAUTION: Take care not to damage bearing track, if track is damaged, it will be necessary to fit a new input shaft front bearing.

8. Remove input shaft oil seal from front cover; discard oil seal.

Refit

9. Using a suitable solvent clean seal recess, front cover and gearbox mating faces; clean threads of bolts and bolt holes.
10. Clean bearings and bearing races.
11. Lubricate a new oil seal with gearbox oil.
12. Fit oil seal using a suitable mandrel.
13. Fit input shaft front bearing track using a press and suitable mandrel.
14. Apply sealant, Part No. STC 4404 to front cover.
15. Position front cover, apply Loctite 290 to threads of bolts; fit new bolts and tighten by diagonal selection to ***25 Nm (18 lbf.ft).***
16. Clean clutch housing mating faces, dowels and dowel holes.
17. Position clutch housing, fit bolts and tighten by diagonal selection to ***75 Nm (55 lbf.ft).***
18. Clean bearing sleeve mating faces, dowel and dowel holes.
19. Position bearing sleeve, fit bolts and tighten to ***25 Nm (18 lbf.ft).***
20. Examine clutch release fork pivot points for wear and replace as required.
21. Apply a smear of Molybdenum disulphide grease to pivot points and position release fork.
22. Fit retaining clip ensuring it locates over pivot point washer, fit bolt and tighten to ***10 Nm (7 lbf.ft).***
23. Clean release bearing and bearing sleeve mating faces.
24. Apply smear of Molybdenum disulphide grease to release bearing sleeve.
25. Fit release bearing and secure with retaining peg.
26. Fit gearbox. ***See this Section.***

LEVER - GEAR CHANGE

Service repair no - 37.16.04

Remove

1. Remove gear lever knob.
2. Release and remove gear lever gaiter(s).

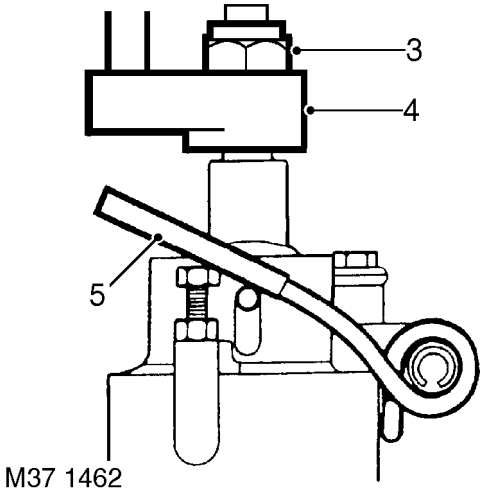

3. Remove nut securing upper gear lever to lower gear lever.
4. Remove upper gear lever from lower gear lever.
5. Using a suitable piece of tubing fitted over end of bias spring, release both ends of bias spring from ball pins.

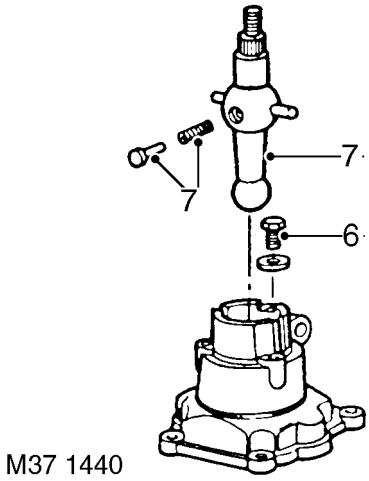

6. Remove bolt and special washer securing gear lever to housing.
7. Carefully withdraw gear lever from housing ensuring that spring loaded nylon pad is retained during removal.

WARNING: Personal injury may result if nylon pad is not retained.

Refit

8. Clean gear lever, housing and nylon pad.
9. Lubricate ball pin with multi-purpose grease and fit nylon pad and spring.
10. Depress nylon pad against spring pressure, position gear lever in housing with the nylon pad facing away from bias spring location.
11. Fit gear lever retaining bolt and special washer and tighten bolt to ***10 Nm (7 lbf.ft).***
12. Using a suitable piece of tubing fitted over ends of bias spring, locate each end of bias spring to ball pins.
13. Fit upper gear lever to lower gear lever and tighten retaining nut to ***25 Nm (18 lbf.ft).***
14. Adjust bias spring. ***See Adjustment.***
15. Fit gear lever gaiter(s).
16. Fit gear lever knob.

MECHANISM AND HOUSING - GEAR SELECTOR

Service repair no - 37.16.37

Remove

1. Remove gear lever knobs.
2. Remove gearbox tunnel carpet.
3. Remove gear lever gaiter(s)
4. Release and remove insulation pad from around gear levers.

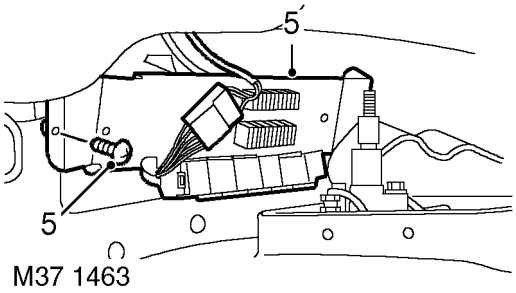

5. Remove 2 screws securing relay/fuse panel and collect 2 spacers.
6. Release bulkhead carpet from LH side of tunnel and move aside.

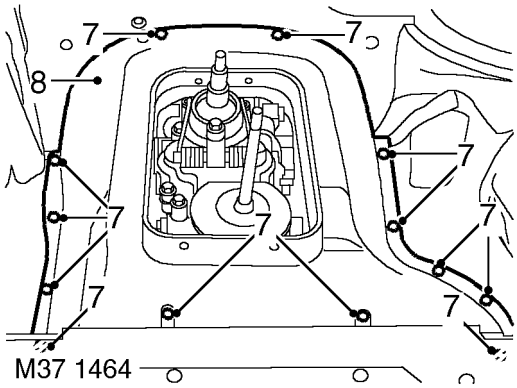

7. Remove 13 screws securing tunnel cover.
8. Release and remove tunnel cover.

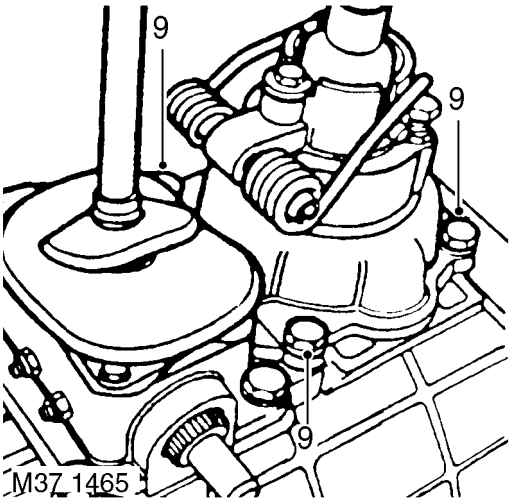

9. Remove 4 bolts securing gear change housing, remove housing, remove and discard gasket.

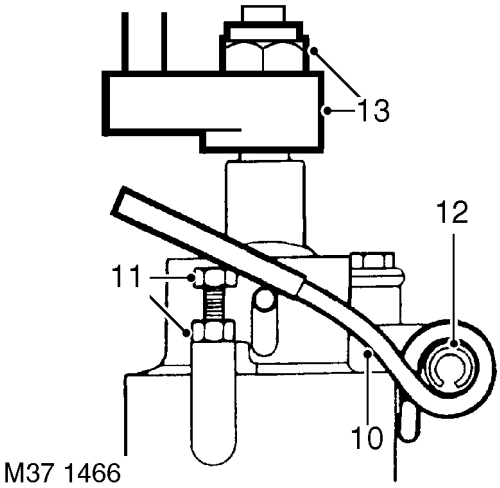

10. Using a suitable piece of tubing located over ends of bias spring, release both ends of bias spring from ball pins.
11. Loosen locknuts and remove bias spring adjusting screws.
12. Drift out roll pin, remove bias spring.
13. Remove nut and extension from lower gear lever.

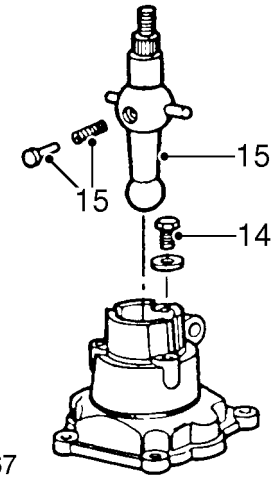

M37 1467

14. Remove bolt and special washer securing lower gear lever in housing.
15. Carefully withdraw lower gear lever from the housing ensuring that the spring loaded nylon pad is retained during removal.

WARNING: Personal injury may result if nylon pad is not retained.

16. Release nylon pad, recover spring.

Refit

17. Clean components, gear change housing and mating face on remote housing.
18. Apply multi - purpose grease to ball pin and fit spring and nylon pad.
19. Depress nylon pad against spring pressure, position lower gear lever in housing with the nylon pad facing away from bias spring location.
20. Fit lower gear lever retaining bolt and special washer and tighten bolt to ***10 Nm (7 lbf.ft).***
21. Fit upper gear lever to lower gear lever and tighten nut to ***25 Nm (18 lbf.ft).***
22. Drift new roll pin into housing.
23. Fit bias spring adjusting screws and locknuts.
24. Using a suitable piece of tubing, locate both ends of bias spring over ball pins.
25. Fit new gasket to remote housing, position gear change housing to remote housing and tighten bolts to ***25 Nm (18 lbf.ft).***
26. Adjust bias springs. ***See Adjustment.***
27. Fit and align tunnel cover, fit and tighten screws.
28. Secure bulkhead carpet to LH side of tunnel.
29. Position relay/fuse panel, fit spacers and tighten screws.
30. Fit insulation pad around gear levers.
31. Fit gear lever gaiter(s).
32. Fit gearbox tunnel carpet.
33. Fit gear lever knobs.

MECHANISM AND HOUSING - GEAR SELECTOR - RESEAL

Service repair no - 37.16.37.01

Remove

1. Remove gear lever knobs.
2. Remove gearbox tunnel carpet.
3. Remove gear lever gaiter(s).
4. Release and remove insulation pad from around gear levers.

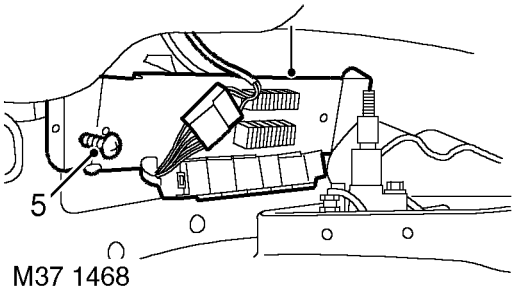

5. Remove 2 screws securing relay/fuse panel and collect 2 spacers.
6. Release bulkhead carpet from LH side of tunnel and move aside.

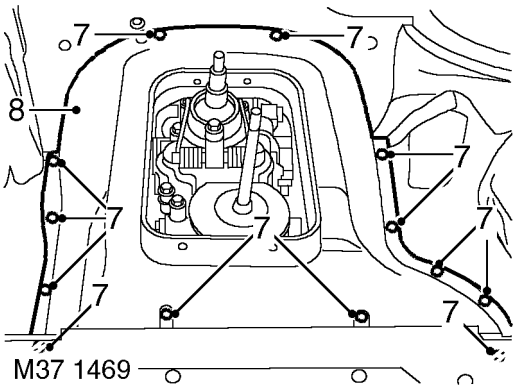

7. Remove 13 screws securing tunnel cover.
8. Release and remove tunnel cover.

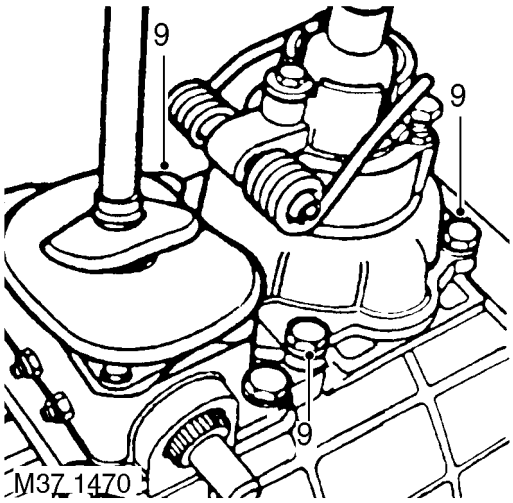

9. Remove 4 bolts securing gear change housing, remove housing, remove and discard gasket.

Refit

10. Clean gear change housing and mating face on remote housing.
11. Fit new gasket to remote housing, position gear change housing to remote housing; fit bolts and tighten to ***25 Nm (18 lbf.ft).***
12. Fit and align tunnel cover, fit and tighten screws.
13. Secure bulkhead carpet to LH side of tunnel.
14. Position relay/fuse panel, fit spacers and tighten screws.
15. Fit insulation pad around gear levers.
16. Fit gear lever gaiter(s).
17. Fit gearbox tunnel carpet.
18. Fit gear lever knobs.

GEARBOX

Service repair no - 37.20.02.99

Remove

1. Disconnect battery negative lead.
2. Remove gear lever and transfer gearbox lever knobs.
3. Remove gearbox tunnel carpet.
4. Remove gear lever cover.

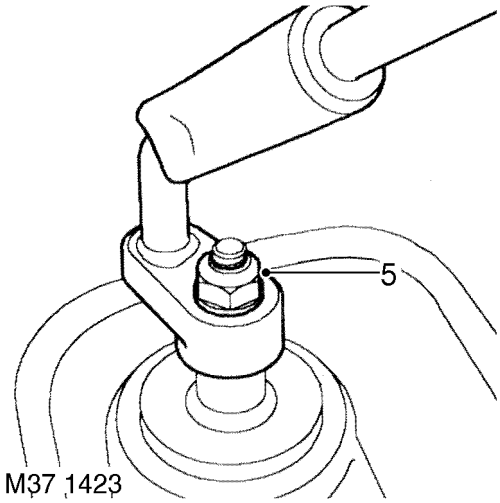

5. Remove nut and washer securing gear lever to lower splined lever.
6. Mark gear lever spline setting to lower lever and remove lever.
7. Release and remove insulation pad from tunnel.

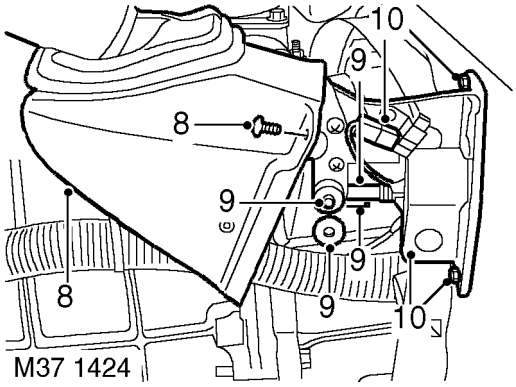

8. Remove trim stud and lift up handbrake gaiter for access to clevis pin.
9. Remove split pin, clevis pin, washer and disconnect cable from handbrake lever; discard split pin.
10. Remove 2 bolts securing hand-brake lever to body, disconnect Lucar and remove lever.

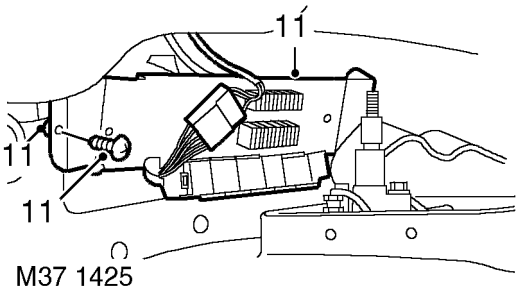

11. Remove 2 screws securing relay panel and collect 2 spacers.

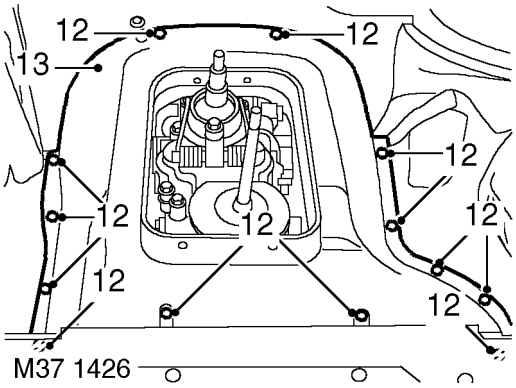

12. Remove 13 screws securing tunnel cover.
13. Release and remove tunnel cover.
14. Remove cooling fan. ***See COOLING SYSTEM, Repair.***
15. Remove air filter. ***See FUEL SYSTEM, Repair.***

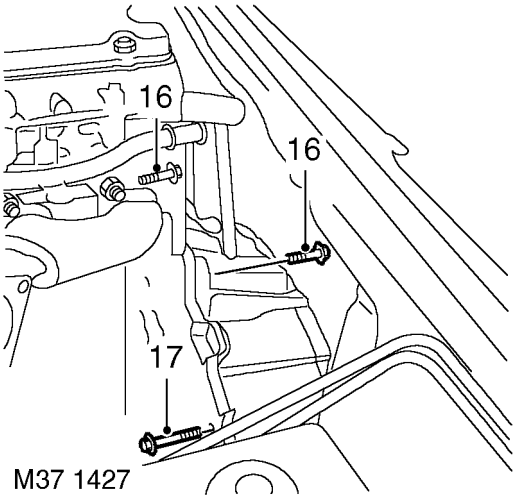

16. Remove 2 upper bolts securing clutch housing to engine.
17. Remove bolt securing shim to clutch housing.

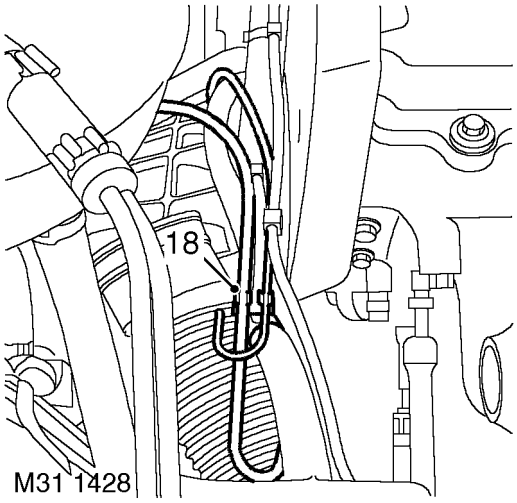

18. Release gearbox breather pipes from clips on heater hose.
19. Remove starter motor. ***See ELECTRICAL, Repair.***
20. Remove exhaust front pipe. ***See MANIFOLD AND EXHAUST SYSTEM, Repair.***
21. Drain gearbox oil. ***See Adjustment.***
22. Drain transfer gearbox oil. ***See MAINTENANCE ,***

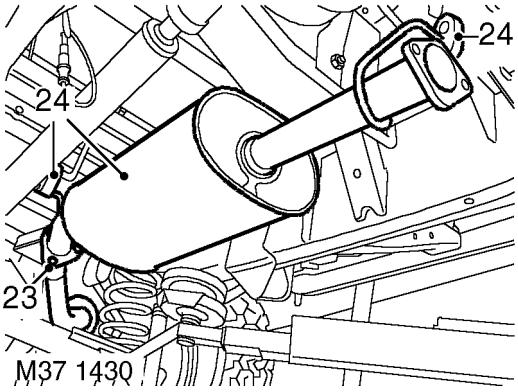

23. Remove 3 nuts securing intermediate silencer to tail pipe.
24. Release silencer from mounting rubbers, remove silencer and discard gasket.
25. Mark front and rear propeller shaft to transfer gearbox flanges for reassembly purposes.

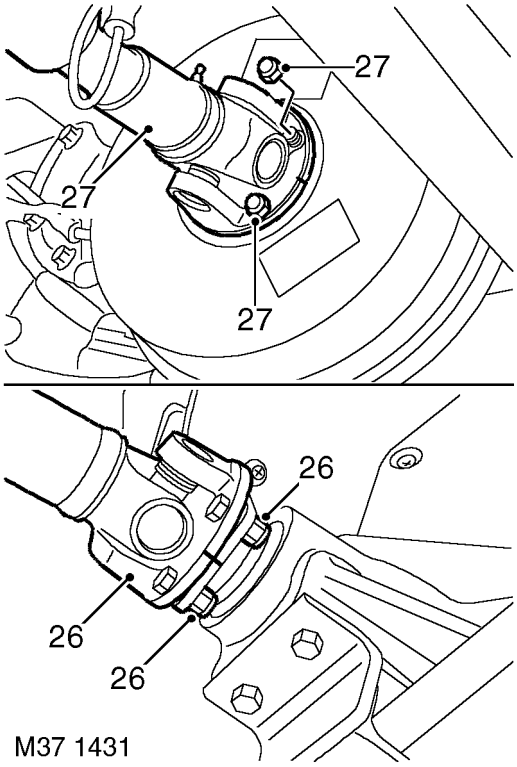

26. Remove 4 nuts securing front propeller shaft to transfer gearbox, release propeller shaft from output drive flange.
27. Remove 4 nuts, release rear propeller shaft from brake drum.

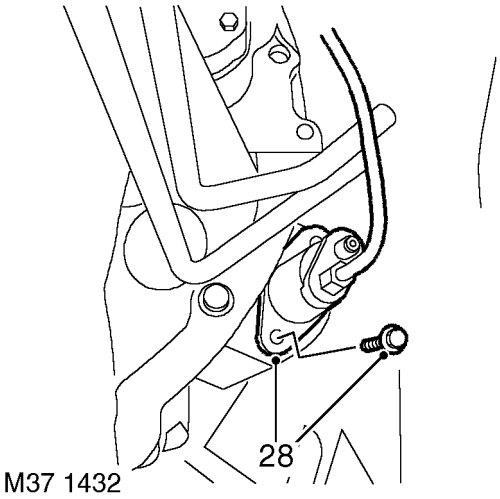

28. Remove 2 bolts securing clutch slave cylinder, release slave cylinder and position aside.

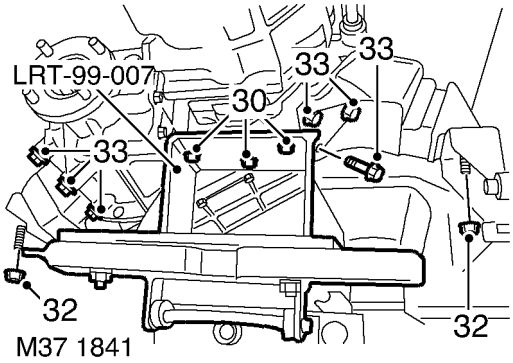

29. Fit support plate **LRT-99-007** to gearbox jack.
30. Position gearbox jack and support plate to gearbox and secure with 3 bolts.
31. Support the weight of gearbox.
32. Remove 4 nuts securing LH and RH mountings to chassis and transfer gearbox mounting brackets.
33. Remove bolts securing mountings to gearbox, raise gearbox and remove both mountings and heat shield from LH mounting and brackets.

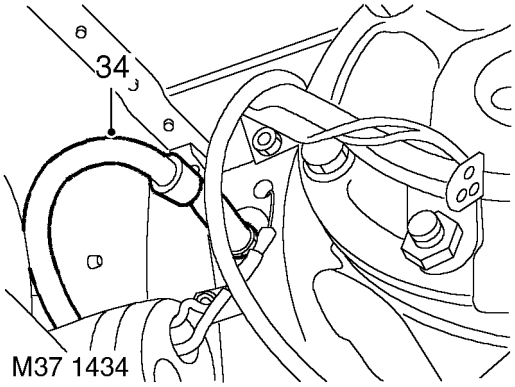

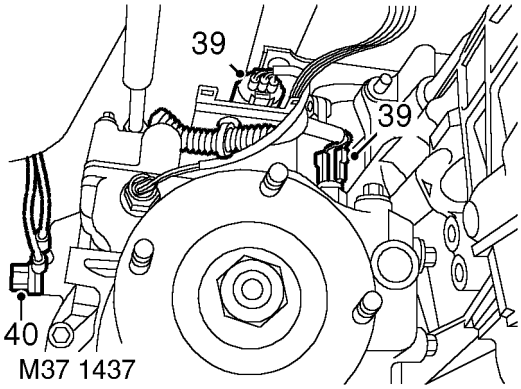

34. Pull handbrake cable through heel board.

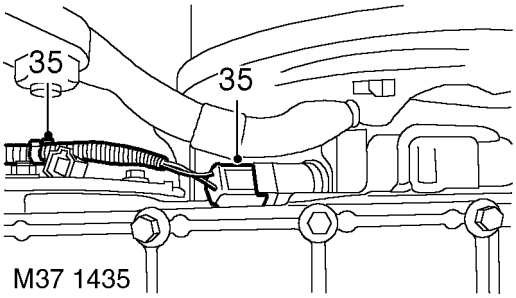

35. Disconnect multiplug from speed sensor and release harness from clip on transfer gearbox.

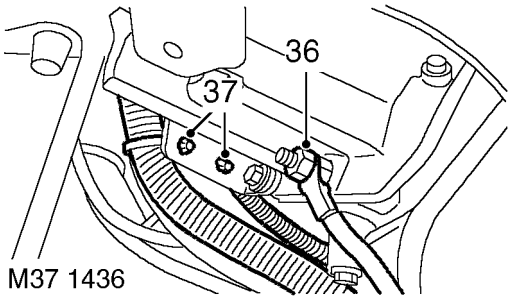

36. Remove retaining nut and release battery earth lead from transfer gearbox.
37. Release body harness clips from bracket on top of transfer gearbox.
38. Lower gearbox jack sufficiently to allow transfer gearbox lever to clear tunnel.

39. Disconnect 2 Lucars from differential lock switch, multiplug from reverse light switch and multiplug from low ratio detect switch - if fitted and release multiplug from bracket.
40. Remove bolt and release earth leads from RH side of transfer gearbox.
41. Support the weight of the engine.

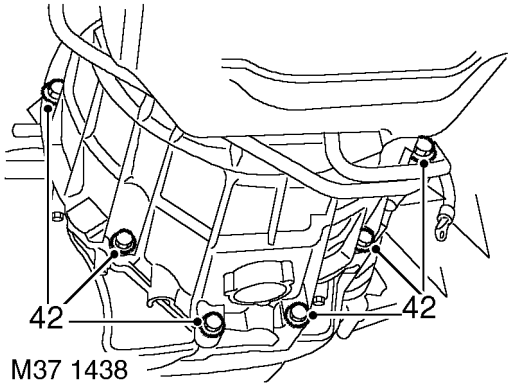

42. Remove 6 bolts securing clutch housing to engine.
43. With assistance, remove gearbox from engine.

Refit

44. Clean gearbox to engine mating faces, dowels and dowel holes.
45. With assistance raise gearbox on jack and align to clutch and engine.
46. Fit lower bolts securing clutch housing to engine and tighten to ***50 Nm (37 lbf.ft).***

NOTE: Do not fit upper bolts at this stage.

47. Fit earth leads and secure with bolt.
48. Connect Lucars to differential lock switch, multiplug to reverse light switch, position multiplug to bracket and connect low ratio detect multiplug - if fitted.
49. Raise gearbox jack and guide transfer gearbox lever through tunnel.
50. Secure body harness clips to bracket on top of transfer gearbox.
51. Position battery earth lead to transfer gearbox and tighten retaining nut.
52. Connect multiplug to speed sensor and secure harness in clip on transfer gearbox.
53. Position mounting brackets and rubber mountings, positioning heat shield to LH mounting and tighten bracket bolts to ***85 Nm (63 lbf.ft).***
54. Position nuts to mountings and tighten to ***48 Nm (35 lbf.ft).***
55. Remove 3 bolts securing support plate **LRT-99-007** to gearbox.
56. Position handbrake cable through heel board.
57. Position clutch slave cylinder, fit bolts and tighten to ***25 Nm (18 lbf.ft).***
58. Clean propeller shafts and mating faces.
59. Position propeller shafts, align to marks and tighten nuts to ***48 Nm (35 lbf.ft).***
60. Clean intermediate silencer and tail pipe mating faces.
61. Position silencer and secure on mountings, using a new gasket align to tail pipe, fit nuts and tighten to ***25 Nm (18 lbf.ft).***
62. Refill gearbox with oil. ***See Adjustment.***
63. Refill transfer gearbox with oil. ***See MAINTENANCE ,***
64. Fit exhaust front pipe. ***See MANIFOLD AND EXHAUST SYSTEM, Repair.***
65. Refit starter motor. ***See ELECTRICAL, Repair.***

66. Fit bolt securing shim plate to clutch housing and tighten ***10 Nm (7 lbf.ft).***
67. Position heater pipe to gearbox housing, fit upper bolts securing clutch housing to engine and tighten to ***50 Nm (37 lbf.ft).***
68. Position gearbox breather pipes to clips on heater hose.
69. Fit air cleaner. ***See FUEL SYSTEM, Repair.***
70. Fit cooling fan. ***See COOLING SYSTEM, Repair.***
71. Fit and align tunnel cover, fit and tighten screws.
72. Position relay panel, fit spacers and tighten screws.
73. Position hand-brake lever and tighten bolts to ***25 Nm (18 lbf.ft).***
74. Connect handbrake cable to lever, fit clevis pin, washer and new split pin.
75. Connect Lucar to hand-brake switch.
76. Position gaiter to handbrake lever and secure with trim stud.
77. Locate insulation pad over gear levers and fit to tunnel cover.
78. Align spline marks, fit gear lever to lower lever, fit washer and secure with retaining nut.
79. Position gear lever cover.
80. Position gearbox tunnel carpet.
81. Fit gear lever and transfer gear lever knobs.
82. Reconnect battery negative lead.
83. Fit battery cover.

SWITCH - REVERSE LIGHT

Service repair no - 37.27.01

Remove

1. Remove gear lever knobs.
2. Remove gearbox tunnel carpet.
3. Remove gear lever (s) gaiter.
4. Release and remove insulation pad from around gear levers.

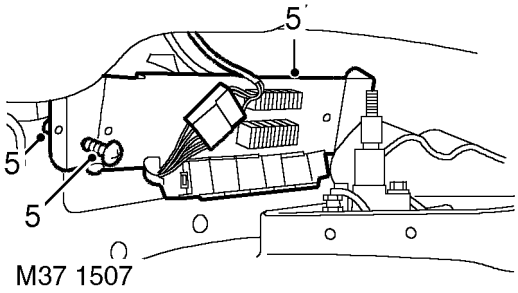

5. Remove 2 screws securing relay/fuse panel and collect 2 spacers.
6. Release bulkhead carpet from LH side of tunnel and move aside.

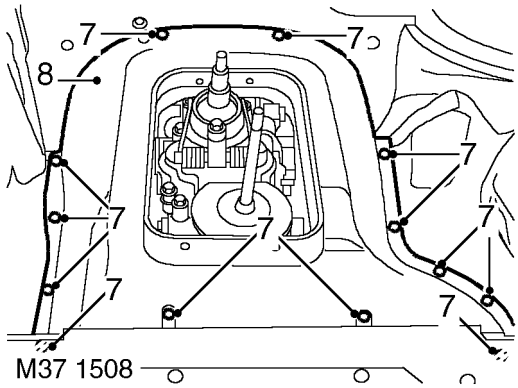

7. Remove 13 screws securing tunnel cover.
8. Release and remove tunnel cover.

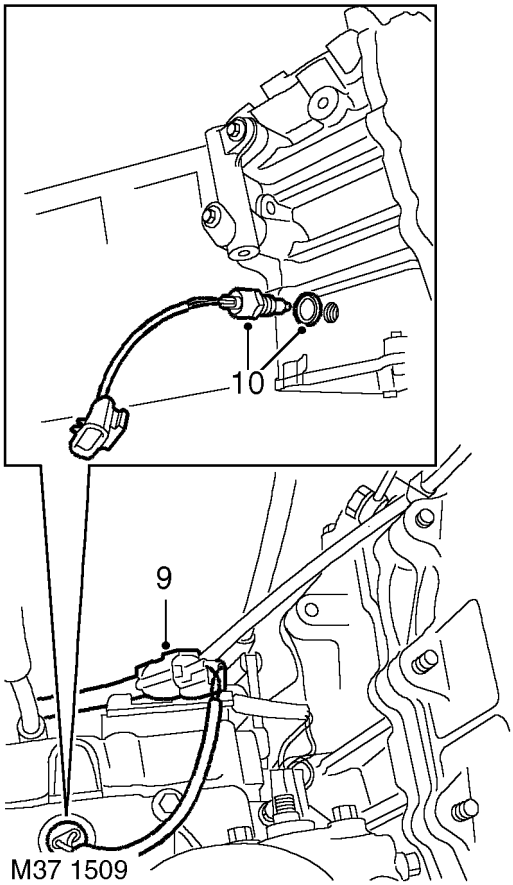

9. Disconnect reverse light switch multiplug.
10. Remove switch and discard sealing washer.

Refit

11. Clean switch and mating face on gearbox.
12. Fit new sealing washer and fit switch to gearbox.
13. Connect reverse light switch multiplug.
14. Fit and align tunnel cover, fit and tighten screws.
15. Secure bulkhead carpet to LH side of tunnel.
16. Position relay/fuse panel, fit spacers and tighten screws.
17. Fit insulation pad around gear levers.
18. Fit gear lever (s) gaiter.
19. Fit gearbox tunnel carpet.
20. Fit gear lever knobs.

41 - TRANSFER GEARBOX

CONTENTS

Page

ADJUSTMENT

DIFFERENTIAL LOCK WARNING LAMP SWITCH 1
HIGH/LOW SELECTOR LINKAGE 1

REPAIR

BOTTOM COVER - TRANSFER GEARBOX - RESEAL 1
TRANSFER GEARBOX 1
GASKET - REAR COVER PLATE 6
SWITCH - DIFFERENTIAL LOCK WARNING LAMP 7
SEAL - INPUT SHAFT 8
SEAL - FRONT OUTPUT SHAFT 9
SEAL - REAR OUTPUT SHAFT 10
GASKET - REAR OUTPUT SHAFT HOUSING 12
SWITCH - LOW DETECT 13

DIFFERENTIAL LOCK WARNING LAMP SWITCH

Service repair no - 41.20.36

Adjust

NOTE: This procedure is only necessary for switches fitted with a locknut in place of the threaded spacer.

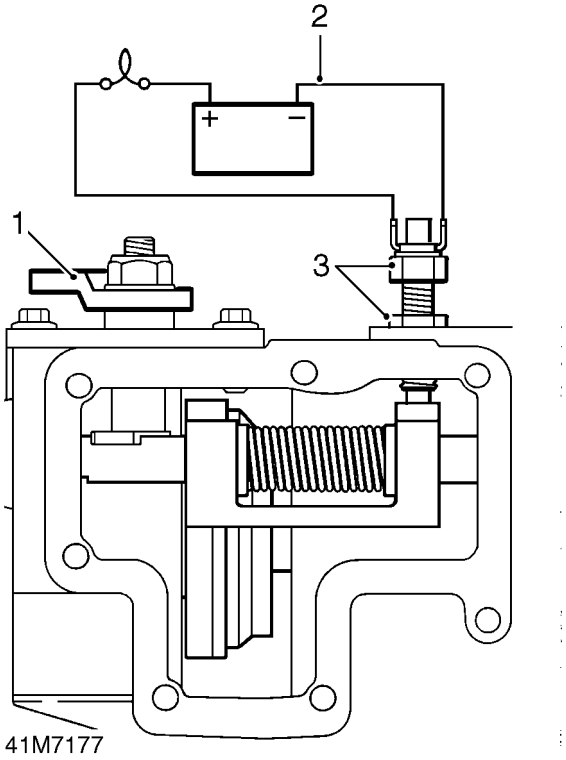

1. Move differential lock selector fork to differential locked position.
2. Connect a 12V test lamp and battery to differential lock warning lamp switch.
3. Screw switch in until test lamp is illuminated then screw switch in a further 1/2 turn; tighten locknut.
4. Disengage differential lock, check that test lamp is extinguished.
5. Remove test lamp.

HIGH/LOW SELECTOR LINKAGE

Service repair no - 41.20.46

Adjust

1. Disconnect battery negative lead.
2. Remove gear lever knobs.
3. Remove gearbox tunnel carpet.
4. Remove gear lever (s) gaiter.
5. Release and remove insulation pad from around gear levers.

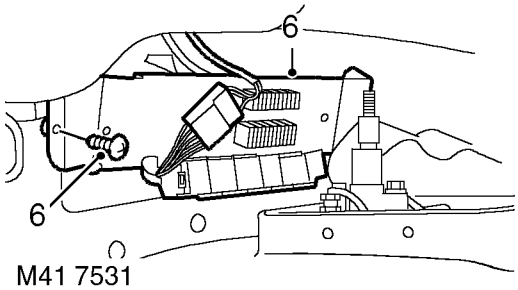

6. Remove 2 screws securing relay/fuse panel and collect 2 spacers.
7. Release bulkhead carpet from LH side of tunnel and move aside.
8. Remove 2 bolts securing hand-brake lever to body and move aside.

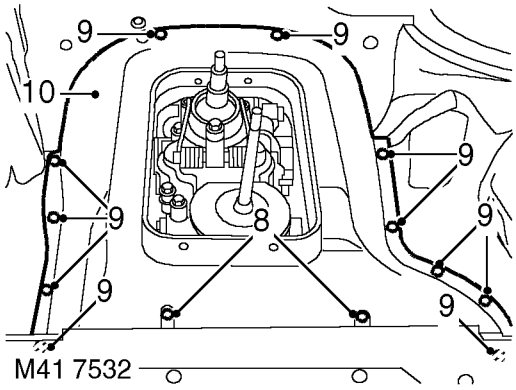

9. Remove 13 screws securing tunnel cover.
10. Release and remove tunnel cover.
11. Loosen linkage locknut.

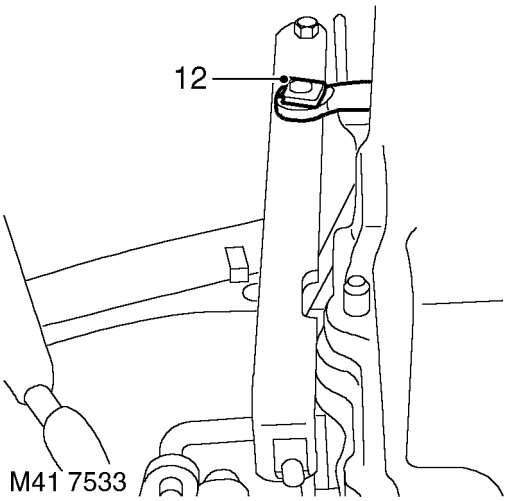

12. Remove clevis pin clip and clevis pin securing high-low selector linkage to lever.
13. Select neutral in transfer gearbox.
14. Move gear lever to neutral position.
15. Align linkage and check that clevis pin passes through linkage without binding.
16. If binding occurs, adjust linkage until clevis pin passes through without binding.
17. Fit clevis pin and clevis pin clip.
18. Tighten locknut.
19. Fit and align tunnel cover and secure with screws.
20. Position hand-brake lever and tighten bolts to ***25 Nm (18 lbf.ft).***
21. Secure bulkhead carpet to LH side of tunnel.
22. Position relay/fuse panel, fit spacers and tighten screws.
23. Position insulation pad around gear levers.
24. Fit gear lever gaiter.
25. Fit gearbox tunnel carpet.
26. Fit gear lever knobs.
27. Reconnect battery negative lead.

BOTTOM COVER - TRANSFER GEARBOX - RESEAL

Service repair no - 41.20.06

1. Raise vehicle on ramp.
2. Remove 6 bolts securing rear underbelly panel and remove panel.
3. Drain transfer gearbox oil.

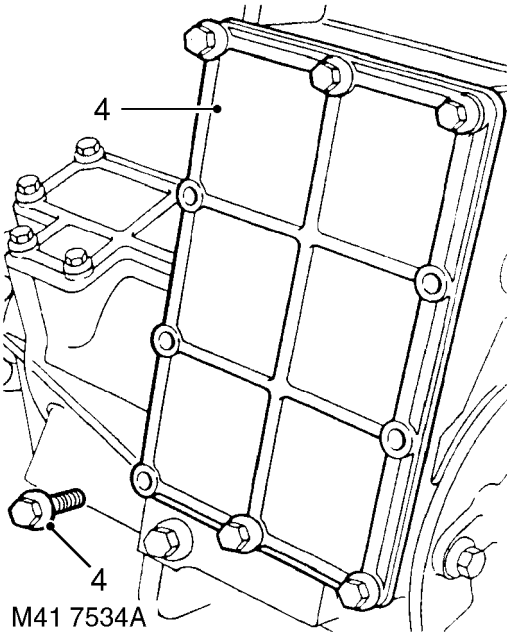

4. Remove 10 bolts securing bottom cover to transfer gearbox and remove cover.

Refit

5. Clean bottom cover and mating face on transfer gearbox.
6. Clean bolt threads.
7. Apply Loctite 290 to bolt threads.
8. Apply Hylosil RTV sealant to bottom cover sealing face.
9. Position bottom cover, fit bolts and tighten to ***25 Nm (18 lbf.ft).***
10. Fill transfer gearbox with oil.
11. Fit rear underbelly panel and tighten bolts.
12. Lower vehicle on ramp.

TRANSFER GEARBOX

Service repair no - 41.20.25.99

Remove

1. Position vehicle on a '4 post' ramp
2. Remove battery cover.
3. Disconnect battery negative lead.
4. Select low range gear and leave vehicle in neutral.
5. Remove gear lever knobs.
6. Remove gearbox tunnel carpet.
7. Remove gear lever cover.
8. Release and remove insulation pad.
9. Remove cubby box. ***See CHASSIS AND BODY, Repair.***

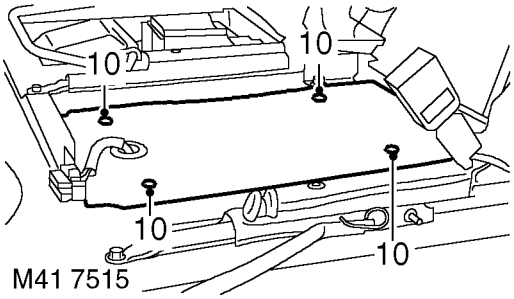

10. Remove 4 screws securing access panel, diagnostic plug mounting bracket and place aside.

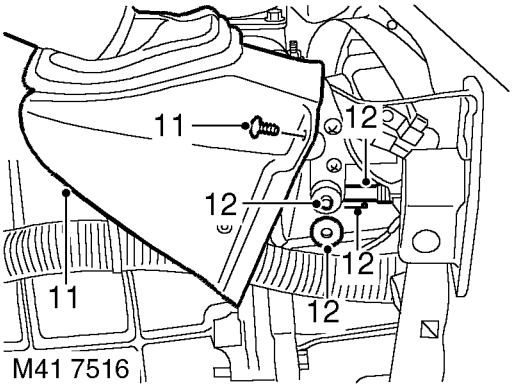

11. Remove trim stud and lift up handbrake gaiter for access to clevis pin.
12. Remove split pin, washer, clevis pin and disconnect cable from handbrake lever.

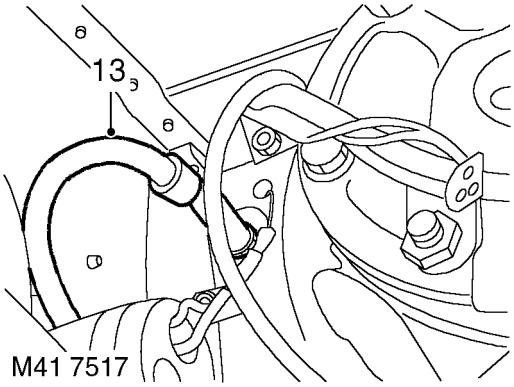

13. Release handbrake outer cable from heelboard.

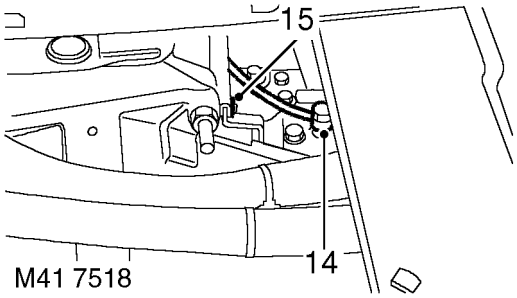

14. Remove breather pipe banjo bolt from transfer gearbox high/low cross shaft housing and discard sealing washers.
15. Remove retaining clip and disconnect high/low operating rod from lever.
16. Remove cooling fan. ***See COOLING SYSTEM, Repair.***
17. Remove front exhaust pipe. ***See MANIFOLD AND EXHAUST SYSTEM, Repair.***
18. Drain transfer gearbox oil.

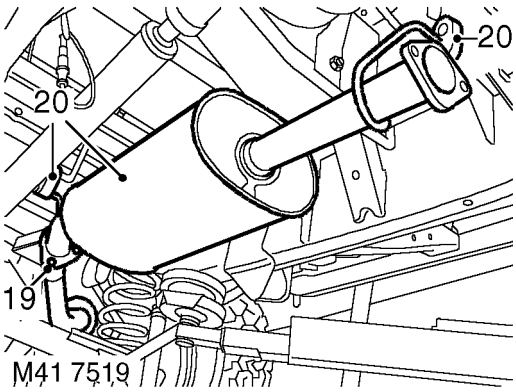

19. Remove 3 nuts securing intermediate silencer to tail pipe.
20. Release intermediate silencer from rubber mountings and remove silencer from tail pipe, discard gasket.

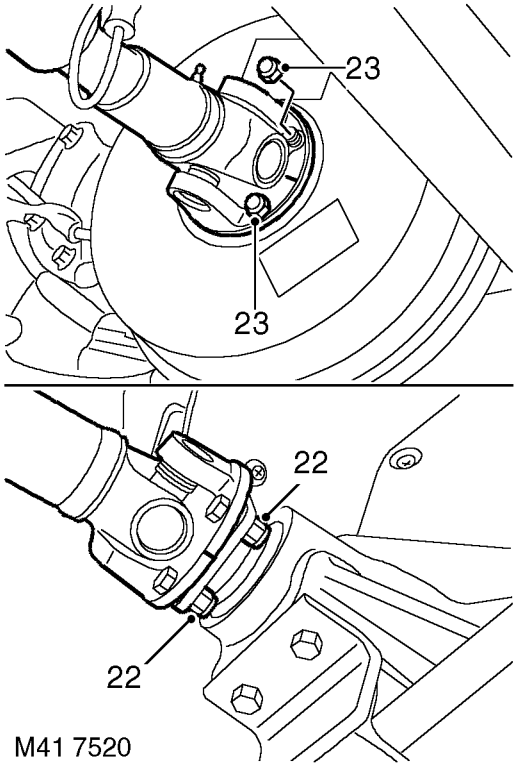

21. Using a centre punch, mark relationship between front propeller shaft and transfer gearbox drive flanges and rear propeller shaft and brake drum drive flanges.
22. Remove 4 nuts securing front propeller shaft to transfer gearbox drive flange and remove propeller shaft.
23. Remove 4 nuts securing rear propeller shaft to brake drum flange.
24. Release propeller shaft and tie aside.

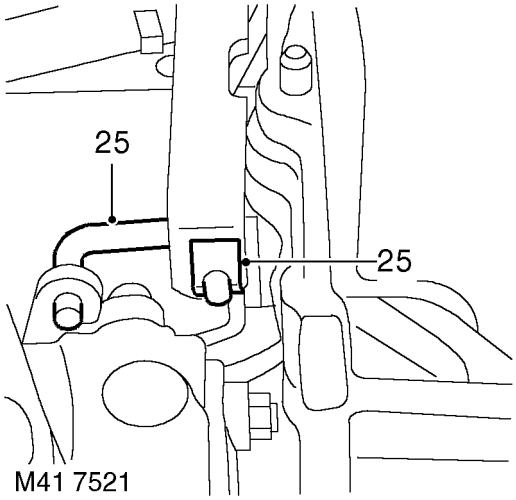

25. Remove retaining clip at lower end of pivot arm and disconnect differential lock control operating rod.

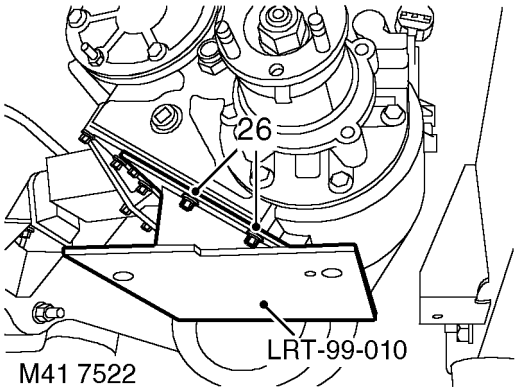

26. Remove 4 central bolts from transfer gearbox bottom cover, position support plate **LRT-99-010** to transfer gearbox and tighten bolts.
27. Position gearbox support jack and secure support plate to jack using 4 bolts.
28. Support the weight of the transfer gearbox.

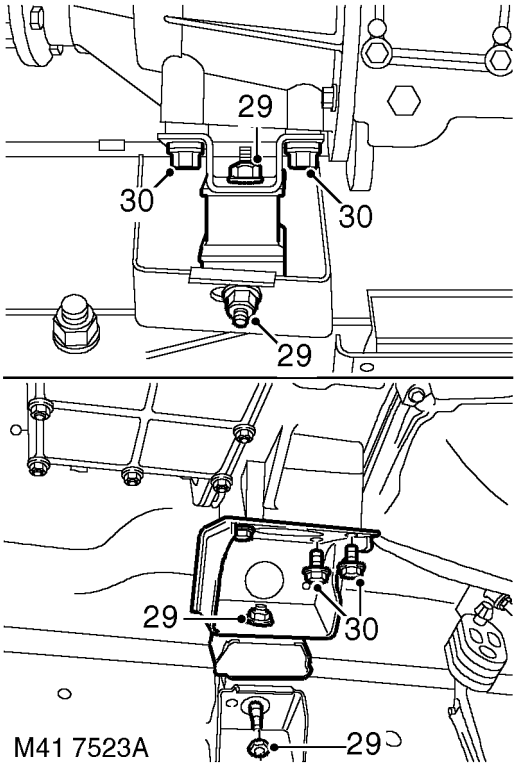

29. Remove 4 nuts securing LH and RH mountings to chassis and transfer gearbox mounting brackets.
30. Remove 8 bolts securing mounting brackets to transfer gearbox, raise gearbox and remove both mountings, heat shield from LH mounting and brackets.

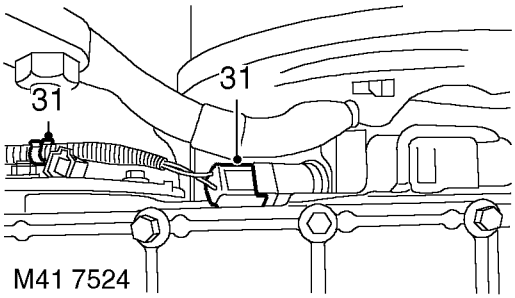

31. Disconnect multiplug from speed sensor and release harness from clip on transfer gearbox.

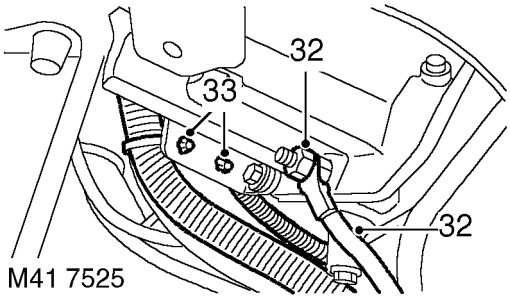

32. Remove retaining nut and release battery earth lead from transfer gearbox.
33. Release body harness clips from bracket on top of transfer gearbox.
34. Lower gearbox jack sufficiently to allow transfer gearbox lever to clear tunnel.

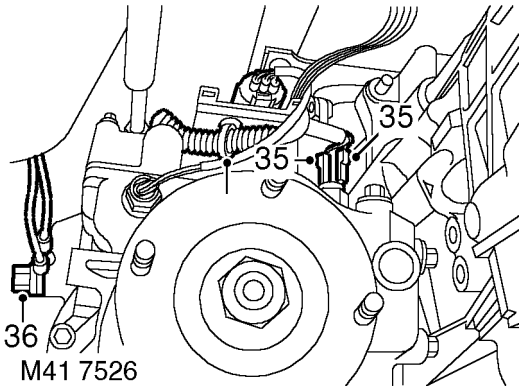

35. Disconnect Lucars from differential lock warning lamp switch and multiplug from low ratio detect switch, and release multiplug from bracket.
36. Remove bolt and release earth leads from RH side of transfer gearbox.
37. Move the high/low selector lever upwards to gain access to adjacent nut securing transfer gearbox to main gearbox.
38. Position a jack to support main gearbox and engine.

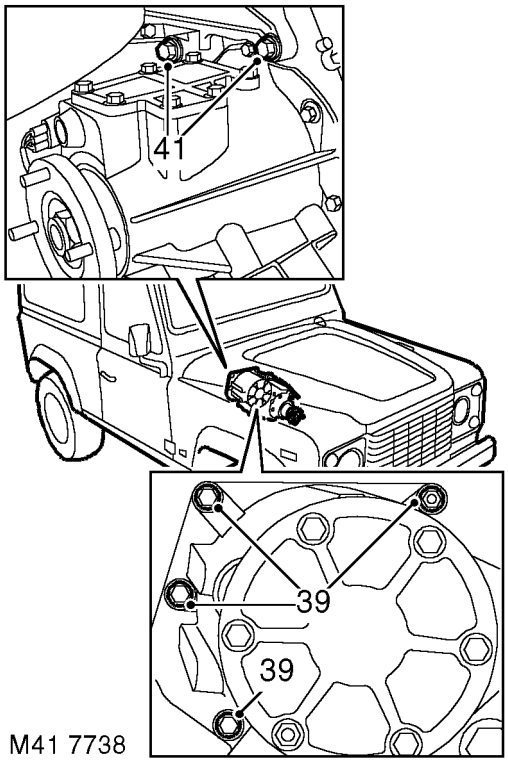

39. Noting their fitted positions, remove 4 bolts securing transfer gearbox to main gearbox extension case.
40. Fit 3 guide studs **LRT-41-009** through transfer gearbox bolt holes to support it during during removal.
41. Remove 2 nuts securing transfer gearbox to main gearbox extension case.

CAUTION: If studs are removed during this operation, they must be discarded and new studs fitted.

42. With assistance, remove transfer gearbox from main gearbox.

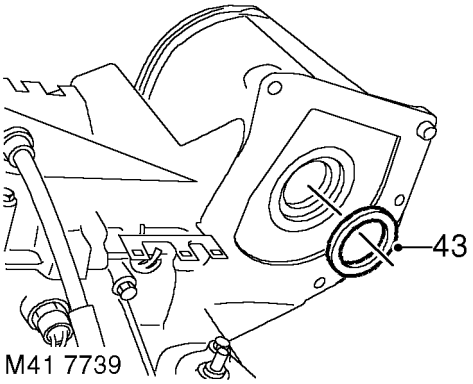

43. If transfer gearbox is to be refitted, remove and discard input shaft oil seal.

Refit

44. Clean mating faces of main gearbox extension case and transfer gearbox.
45. Remove all traces of sealant from threads of transfer gearbox securing bolts and studs.
46. Clean input shaft oil seal recess in transfer gearbox.
47. Lubricate new input shaft oil seal with transfer gearbox oil.

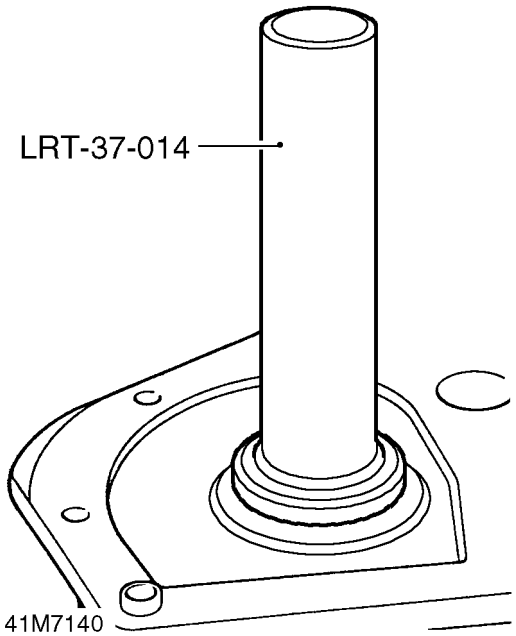

48. Using tool **LRT-37-014**, fit input shaft oil seal, lip side facing inwards.

49. Ensure guide studs **LRT-41-009** are fitted in main gearbox extension case.

CAUTION: If securing studs were removed during transfer gearbox removal, apply Loctite 290 to threads of new studs; fit studs and tighten to 45 Nm (33 lbf.ft).

50. Secure transfer gearbox to support plate **LRT-99-010**, fit and tighten 4 bolts.
51. Raise transmission hoist until transfer gearbox can be located over guide studs **LRT-41-009**.
52. Apply Loctite 290 to threads of securing bolts and studs.
53. Fit and lightly tighten 2 nuts to secure transfer gearbox to main gearbox extension case.
54. Remove guide studs **LRT-41-009.**
55. Ensuring bolts are in their original fitted locations, fit and lightly tighten 4 bolts to secure transfer gearbox to main gearbox extension case.
56. Progressively tighten nuts and bolts to ***45 Nm (33 lbf.ft).***
57. Position earth leads to RH side of transfer gearbox, fit and tighten bolt.
58. Connect low ratio detect switch multiplug and secure to bracket. Connect Lucars to differential lock warning lamp switch.
59. Raise gearbox jack and guide transfer gearbox lever through tunnel.
60. Connect body harness clips to bracket on top of transfer gearbox.
61. Position earth lead to transfer gearbox, tighten nut to ***45 Nm (33 lbf.ft).***
62. Connect speed sensor multiplug and secure harness in clip.
63. Position heat shield to LH mounting, fit mountings and brackets and tighten bolts to ***85 Nm (63 lbf.ft).***
64. Fit nuts securing RH and LH mountings and tighten to ***48 Nm (35 lbf.ft).***
65. Position breather pipe to transfer gear box, fit new sealing washers and tighten banjo bolts to ***15 Nm (11 lbf.ft).***
66. Remove bolts securing support plate to gearbox jack.
67. Remove bolts securing **LRT-99-010** to transfer gearbox.
68. Apply Loctite 290 to threads of bottom cover securing bolts, fit bolts and tighten to ***25 Nm (18 lbf.ft)***
69. Position differential lock control rod and secure with retaining clip.
70. Clean rear propeller shaft to brake drum flange mating faces.

71. Release propeller shaft, align flange markings and connect to studs.
72. Fit nuts securing propeller shaft and tighten to ***48 Nm (33 lbf.ft).***
73. Clean front propeller to transfer gearbox flange mating faces.
74. Fit propeller shaft, align flange markings and tighten nuts to ***48 Nm (33 lbf.ft).***
75. Using new gasket, fit intermediate silencer and tighten nuts to ***25 Nm (18 lbf.ft).***
76. Fit exhaust front pipe. ***See MANIFOLD AND EXHAUST SYSTEM, Repair.***
77. Refill transfer gearbox with recommended oil.
78. Fit cooling fan cowl.
79. Fit high/low operating rod and secure with retaining clip.
80. Position handbrake outer cable to heelboard.
81. Position handbrake cable to lever, fit clevis pin, washer and new split pin.
82. Position handbrake gaiter and secure with trim studs.
83. Fit insulation pad to tunnel.
84. Fit gear lever cover.
85. Fit gear lever knobs.
86. Position diagnostic plug bracket, access panel and tighten screws.
87. Fit carpet to transmission tunnel.
88. Fit cubby box. ***See CHASSIS AND BODY, Repair.***
89. Fit cooling fan. ***See COOLING SYSTEM, Repair.***
90. Reconnect battery negative lead.
91. Fit battery cover.

GASKET - REAR COVER PLATE

Service repair no - 41.20.30

Remove

1. Raise vehicle on '4 post ramp'.

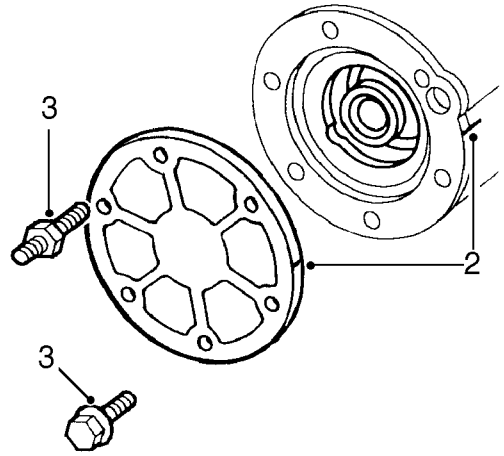

M41 7547

2. Mark rear cover plate to bearing housing for assembly purposes.
3. Noting fitted position of stud bolt and harness clip bracket, remove 5 bolts and stud bolt securing cover plate.
4. Collect harness clip bracket.
5. Remove cover plate.

Refit

6. Clean cover plate and mating face.
7. Apply Hylosil RTV 102 to rear cover mating face.
8. Align reference marks, fit cover plate.
9. Clean cover bolts and apply Loctite 290 threads of bolts and stud nut.
10. Position clip bracket, fit stud nut and bolts, tighten by diagonal selection to ***25 Nm (18 lbf.ft).***
11. Check/top-up transfer gearbox oil.
12. Lower vehicle.

SWITCH - DIFFERENTIAL LOCK WARNING LAMP

Service repair no - 41.20.34

Remove

1. Remove battery cover.
2. Disconnect battery negative lead.
3. Remove gear lever knobs.
4. Remove gearbox tunnel carpet.
5. Remove gear lever (s) gaiter.
6. Release and remove insulation pad from around gear levers.

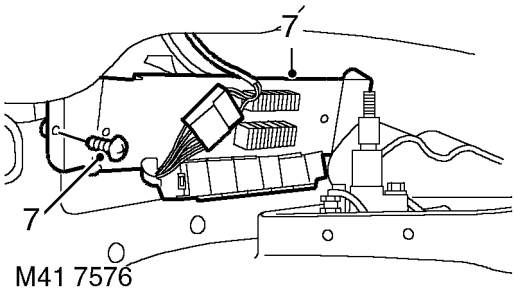

7. Remove 2 screws securing relay/fuse panel and collect 2 spacers.
8. Release bulkhead carpet from LH side of tunnel and move aside.
9. Remove 2 bolts securing hand-brake lever to body and move aside.

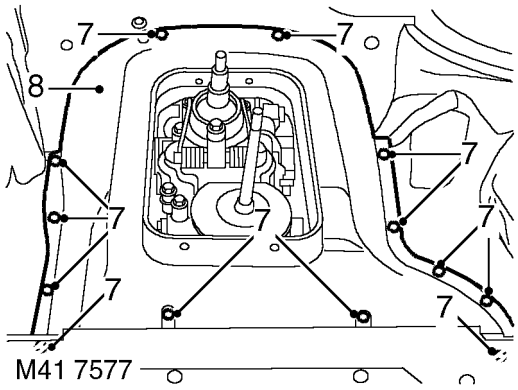

10. Remove 13 screws securing tunnel cover.
11. Release and remove tunnel cover.

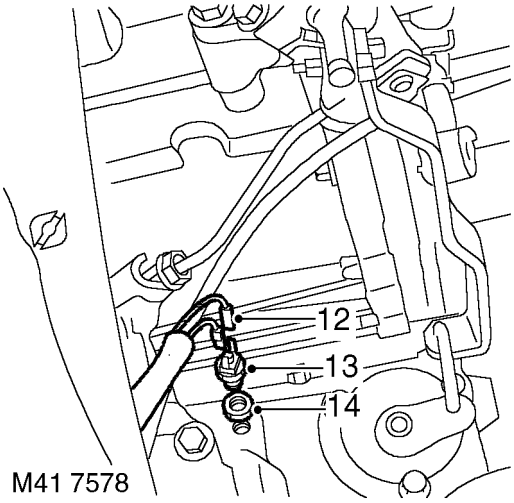

12. Disconnect Lucars from differential lock warning lamp switch.
13. Loosen and remove switch.

NOTE: Locknut fitted in place of spacer on early transfer boxes.

14. Remove locknut/spacer from switch.

Refit

15. Clean switch, locknut/spacer and mating face on gearbox.

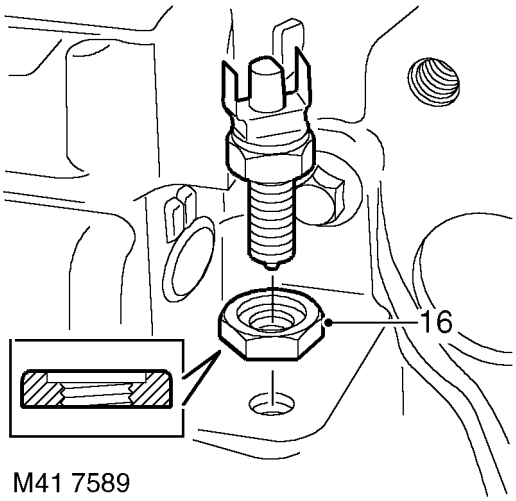

16. Fit locknutnut/spacer to switch with counterbore on spacer positioned towards switch head.

NOTE: To ensure that the switch setting is correct, make sure the spacer is fully tightened to switch head, (no gap).

17. Apply Hylomar PL32 sealant to switch threads.
18. Position switch into gearbox housing until locknut/spacer bottoms out on housing.
19. **Switches fitted with spacer:** Tighten spacer securing differential lock switch to ***11 Nm (8 lbf.ft).***
20. Connect Lucars to switch.
21. **Switches fitted with locknut:** Adjust switch. ***See Adjustment.***
22. Fit and align tunnel cover, fit and tighten screws.
23. Fit hand-brake lever and tighten bolts to ***25 Nm (18 lbf.ft).***
24. Secure bulkhead carpet to LH side of tunnel.
25. Position relay/fuse panel, fit spacers and tighten screws.
26. Fit insulation pad around gear levers.
27. Fit gear lever (s) gaiter.
28. Fit gearbox tunnel carpet.
29. Fit gear lever knobs.
30. Reconnect battery negative lead.
31. Fit battery cover.

SEAL - INPUT SHAFT

Service repair no - 41.20.50

Remove

1. Remove transfer gearbox. ***See this Section.***

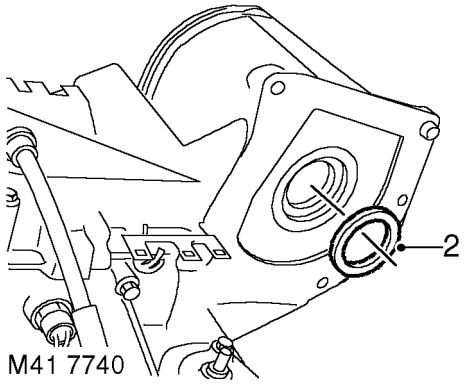

2. Remove and discard input shaft oil seal from transfer gearbox.

Refit

3. Clean oil seal recess in transfer gearbox.
4. Lubricate new oil seal with transfer gearbox oil.

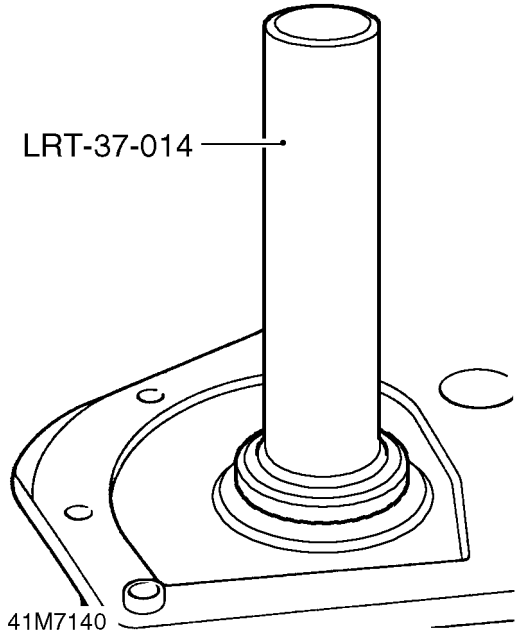

5. Using **LRT-37-014**, fit input shaft seal to transfer gearbox.
6. Fit transfer gearbox. ***See this Section.***

SEAL - FRONT OUTPUT SHAFT

Service repair no - 41.20.51

Remove

1. Position vehicle on 4 post ramp.
2. Remove underbelly panel ***See CHASSIS AND BODY, Repair.***
3. Mark front propeller shaft to transfer gearbox flanges for reassembly purposes.

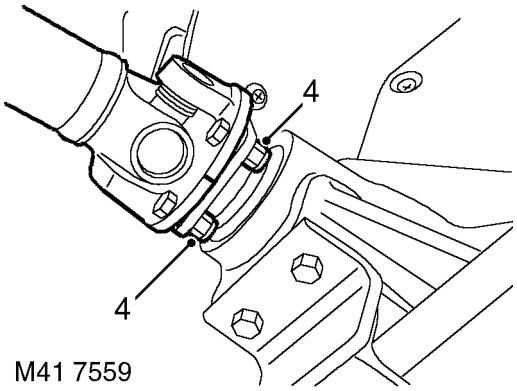

4. Remove and discard 4 nuts securing front propeller shaft to transfer gearbox drive flange, and release propeller shaft from flange.

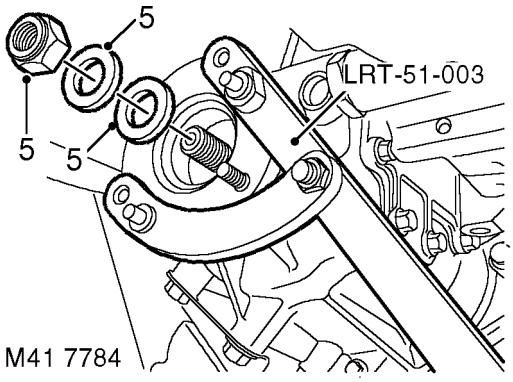

5. Restrain transfer gearbox drive flange using **LRT-51-003** , remove and discard drive flange nut, remove and discard steel and felt washers.

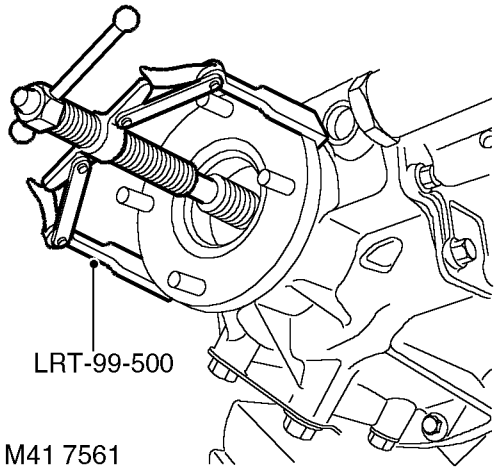

6. Using **LRT-99-500** if necessary remove drive flange from transfer gearbox.

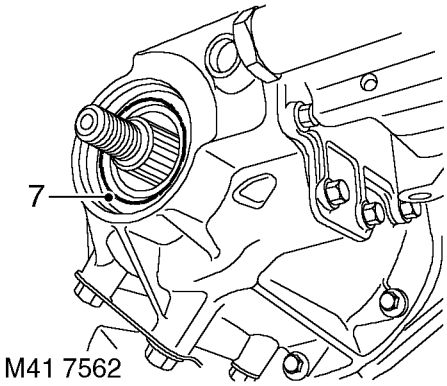

7. Remove and discard front input shaft oil seal from transfer gearbox.

Refit

8. Clean oil seal recess.
9. Lubricate new input shaft oil seal with transfer gearbox oil.

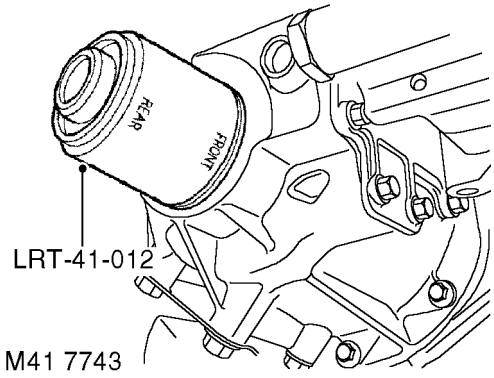

10. Fit oil seal using **LRT-41-012**.

NOTE: Use end of tool marked 'FRONT' to fit seal.

11. Position drive flange, fit new felt and steel washers.

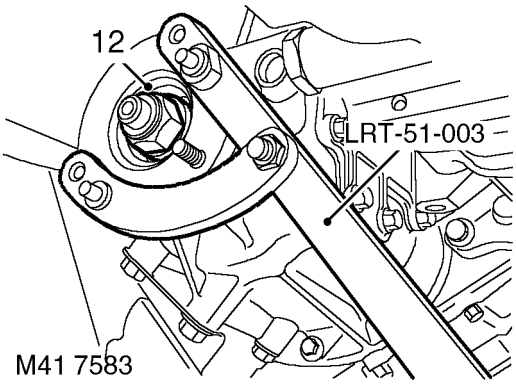

12. Position **LRT-51-003** fit new drive flange nut and tighten to ***148 Nm (109 lbf.ft).***
13. Align marks and position front propeller shaft to output flange. Fit new nuts and tighten to ***48 Nm (35 lbf.ft).***
14. Fit underbelly panel. ***See CHASSIS AND BODY, Repair.***
15. Check/top-up transfer gearbox oil.

SEAL - REAR OUTPUT SHAFT

Service repair no - 41.20.54

Remove

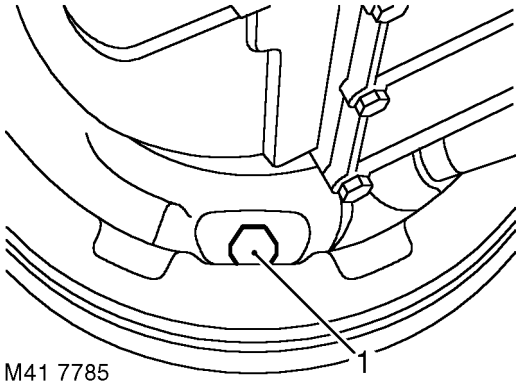

1. Loosen brake shoe adjuster bolt.
2. Remove rear propeller shaft. ***See PROPELLER SHAFTS, Repair.***

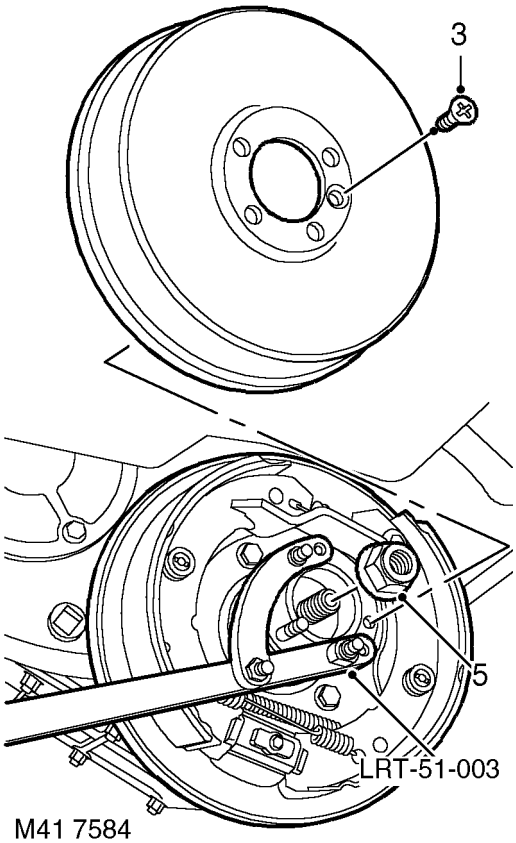

M41 7584

3. Remove screw securing brake drum.
4. Remove brake drum.
5. Restrain transfer gearbox drive flange using **LRT-51-003** , remove and discard drive flange nut, remove and discard steel and felt washers.

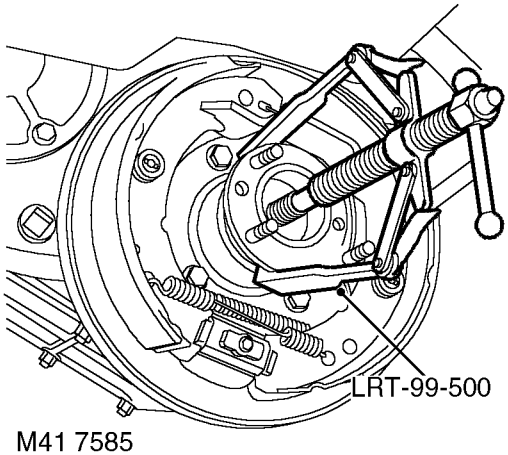

M41 7585

6. Using **LRT-99-500** if necessary, remove drive flange from transfer gearbox.

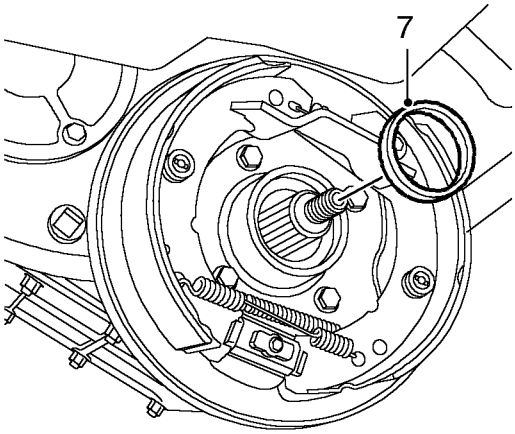

M41 7586

7. Remove and discard rear output shaft oil seal from transfer gearbox.

Refit

8. Clean seal recess.
9. Lubricate new oil seal with transfer gearbox oil.

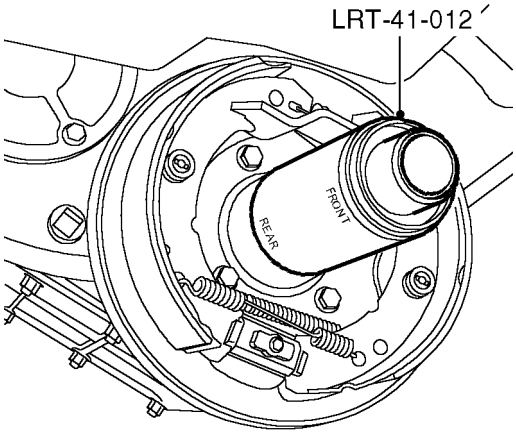

M41 7744

10. Fit new seal using **LRT-41-012** .

NOTE: Use end of tool marked 'REAR' to fit seal.

11. Position drive flange, fit new felt and steel washers.

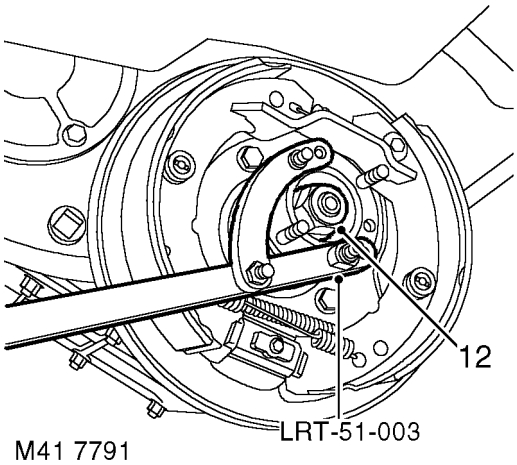

M41 7791

12. Position **LRT-51-003** fit and tighten new drive flange nut to ***148 Nm (109 lbf.ft).***
13. Position brake drum and tighten screw.
14. Tighten adjuster bolt to ***25 Nm (18 lbf.ft)*** then back off 1 1/2 turns.
15. Check that brake drum is free to rotate.
16. Fit propeller shaft. ***See PROPELLER SHAFTS, Repair.***
17. Top-up transfer gearbox oil.

GASKET - REAR OUTPUT SHAFT HOUSING

Service repair no - 41.20.55

Remove

1. Drain transfer gearbox oil. ***See MAINTENANCE ,***
2. Remove rear output shaft seal. ***See this Section.***

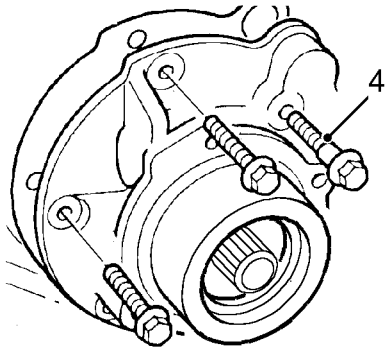

M41 7563

3. Mark output shaft housing to main casing for assembly purposes.
4. Note position of shoulder bolt, remove 6 bolts securing housing to main casing.

Refit

5. Clean output shaft housing, mating face on main casing and sealant from bolt threads.
6. Apply Hylosil RTV 102 to mating flange on output shaft housing.
7. Fit output shaft housing to main casing ensuring that splines of output shaft are engaged in differential.
8. Apply Loctite 290 to bolt threads.
9. Fit bolts and tighten by diagonal selection to ***45 Nm (33 lbf.ft).***
10. Fit rear output shaft seal. ***See this Section.***
11. Fill transfer gearbox with oil. ***See MAINTENANCE ,***

SWITCH - LOW DETECT

Service repair no - 41.30.05

Remove

1. Remove battery cover.
2. Disconnect battery negative lead.
3. Remove gear lever knobs.
4. Remove gearbox tunnel carpet.
5. Remove gear lever(s) gaiter.
6. Release and remove insulation pad from around gear levers.

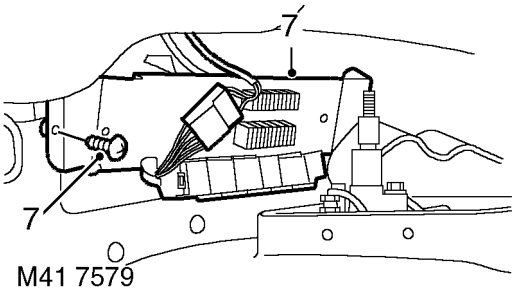

7. Remove 2 screws securing relay/fuse panel and collect 2 spacers.
8. Release bulkhead carpet from LH side of tunnel and move aside.
9. Remove 2 bolts securing hand-brake lever to body and move lever aside.

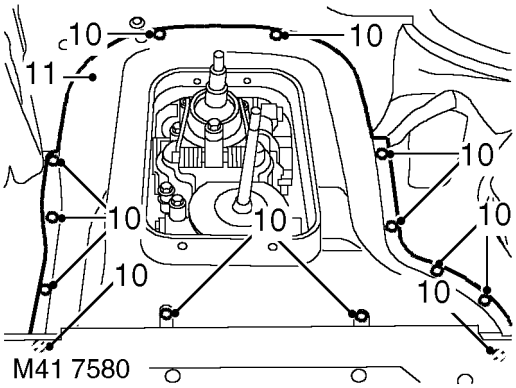

10. Remove 13 screws securing tunnel cover.
11. Release and remove tunnel cover.
12. Release switch multiplug from bracket on transfer gearbox, disconnect from harness.

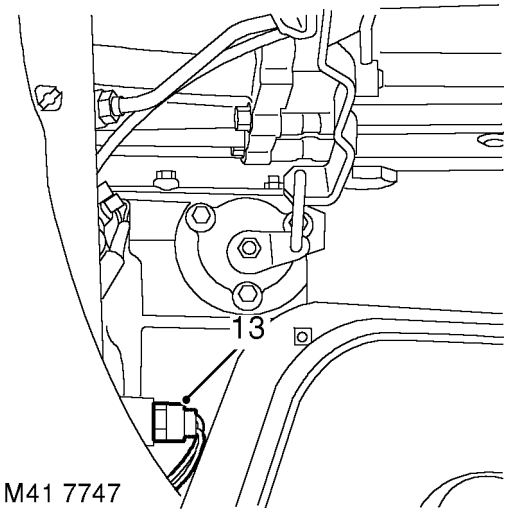

13. Remove switch.

Refit

14. Clean switch and mating face on transfer gearbox.
15. Fit nut/spacer to switch with counterbore positioned towards switch head.
16. Apply Hylomar PL32 sealant to switch threads.
17. Fit switch and tighten to ***24 Nm (19 lbf.ft).***
18. Connect multiplug to harness.
19. Fit and align tunnel cover, fit and tighten screws.
20. Position hand-brake lever and tighten bolts to ***25 Nm (18 lbf.ft).***
21. Secure bulkhead carpet to LH side of tunnel.
22. Position relay/fuse panel, fit spacers and tighten screws.
23. Fit insulation pad around gear levers.
24. Fit gear lever (s) gaiter.
25. Fit gearbox tunnel carpet.
26. Fit gear lever knobs.
27. Reconnect battery negative lead.
28. Fit battery cover.

47 - PROPELLER SHAFTS

CONTENTS

Page

REPAIR

PROPELLER SHAFT - FRONT 1
PROPELLER SHAFT - REAR 1

OVERHAUL

PROPELLER SHAFT - FRONT 1
PROPELLOR SHAFT - REAR 2

PROPELLER SHAFT - FRONT

Service repair no - 47.15.02

Remove

1. Remove underbelly panel. ***See CHASSIS AND BODY, Repair.***

NOTE: To remove the underbelly panel, the propeller shaft has to be released from the front differential flange.

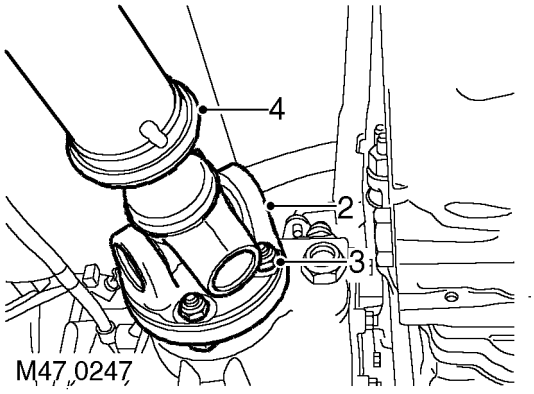

2. Mark propeller shaft to transfer gearbox.
3. Remove 4 nuts securing propeller shaft to transfer gearbox flange.
4. Remove propeller shaft.

Refit

5. Clean propeller shaft flanges and mating faces.
6. Position propeller shaft to transfer gearbox flange and tighten nuts to ***48 Nm (35 lbf.ft).***
7. Fit underbelly panel. ***See CHASSIS AND BODY, Repair.***

PROPELLER SHAFT - REAR

Service repair no - 47.15.03

Remove

1. Raise rear of vehicle.

WARNING: Support on safety stands.

2. Using a centre punch, mark relationship of propeller shaft flanges.

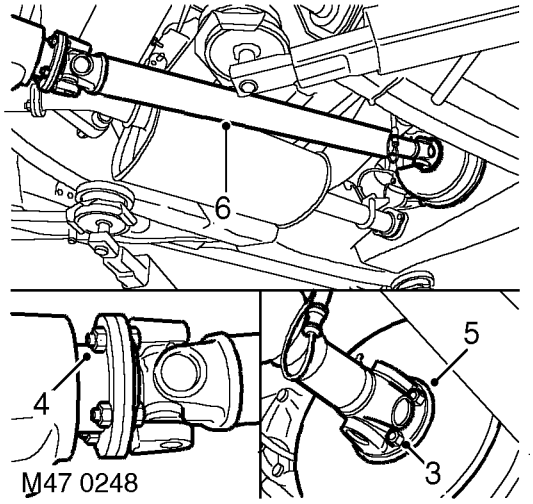

3. Remove 4 nuts securing propeller shaft to park brake flange.

NOTE: Rotation of propeller shaft may be required during the above procedure.

4. Remove 4 nuts and bolts securing propeller shaft to rear axle flange.

NOTE: Rotation of propeller shaft may be required during the above procedure.

5. Release propeller shaft from park brake.
6. Remove propeller shaft.

Refit

7. Grease propeller shaft universal joints.
8. Grease propeller shaft spline.
9. Clean propeller shaft flange mating faces.
10. Fit propeller shaft to park brake flange bolts.

NOTE: Ensure relationship marks align.

11. Position propeller shaft to rear axle flange and fit bolts.
12. Fit nuts and bolts securing propeller shaft to rear axle flange and tighten to ***48 Nm (35 lbf.ft).***

NOTE: Rotation of propeller shaft may be required during the above procedure.

13. Fit nuts securing propeller shaft to park brake and tighten to ***48 Nm (35 lbf.ft).***

NOTE: Rotation of propeller shaft may be required during the above procedure.

14. Remove stand(s) and lower vehicle.

PROPELLER SHAFT - FRONT

Service repair no - 47.15.11

Remove

1. Remove front propeller shaft. ***See Repair.***
2. Thoroughly examine universal joints for signs of damage or wear.
3. Clean universal joint bearing cups and circlips.

CAUTION: To ensure correct assembly and reduce possibility of imbalance, before removing propeller shaft joint mark position of spider pin relative to journal yoke ears.

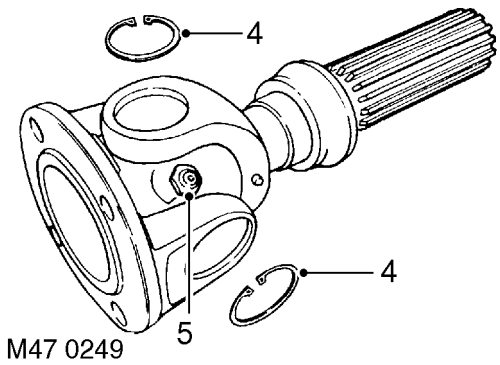

M47 0249

4. Remove circlips.
5. Note position and remove grease nipple.

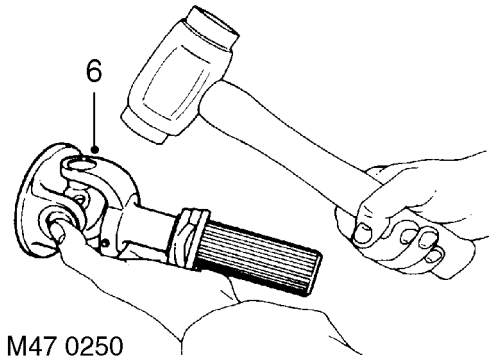

M47 0250

6. Tap yokes to eject bearing cups.
7. Remove bearing cups.
8. Remove spider.
9. Clean yokes and bearing cup locations.

Refit

10. Remove bearing cups from new spider.
11. Check all needle rollers are present and positioned in bearing cups.

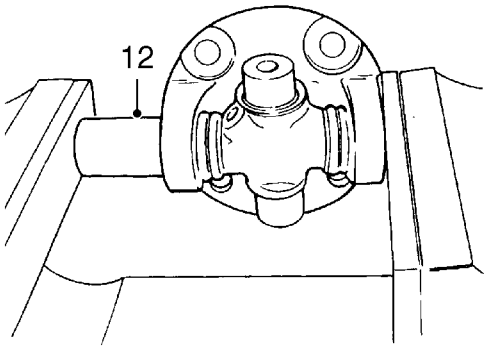

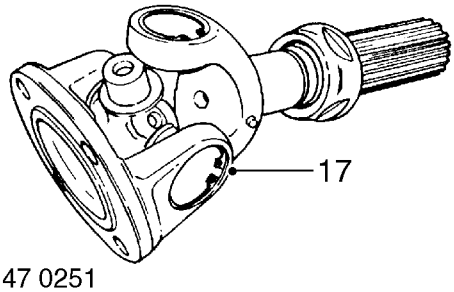

M47 0251

12. Enter new spider with seals into yokes of propeller shaft flange.
13. Partially insert one bearing cup into flange yoke and enter spider trunnion into bearing cup.
14. Insert opposite bearing cup into flange yoke.
15. Press both cups into place.
16. Press each cup into its respective yoke up to lower land of circlip groove. Damage may be caused to cups and seals if cups pass this point.
17. Fit circlips and check no end float exists.
18. Fit grease nipple and lubricate
19. Repeat instructions for opposite end of propeller shaft as described in 1 to 9.
20. Fit front propeller shaft. ***See Repair.***

PROPELLOR SHAFT - REAR

Service repair no - 47.15.12

Remove

1. Remove rear propeller shaft. ***See Repair.***
2. Thoroughly examine universal joint for signs of damage or wear.
3. Clean universal joint bearing cups and circlips.

CAUTION: To ensure correct assembly and reduce possibility of imbalance, before removing propeller shaft joint mark position of spider pin relative to journal yoke ears.

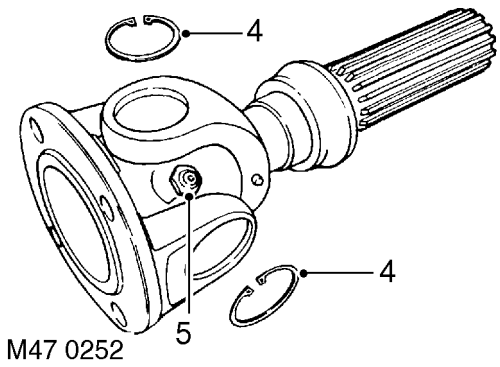

M47 0252

4. Remove circlips.
5. Remove grease nipple.

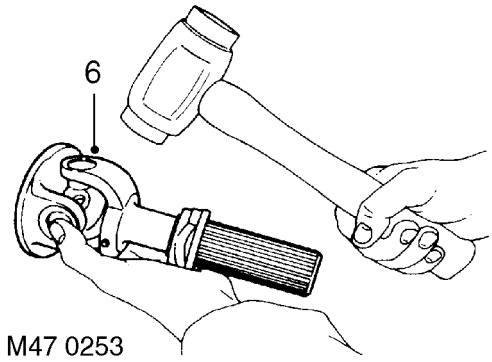

M47 0253

6. Tap yokes to eject bearing cups.
7. Remove bearing cups.
8. Remove spider.
9. Clean yokes and bearing cup locations.

Refit

10. Remove bearing cups from new spider.
11. Check all needle rollers are present and positioned in bearing cups.

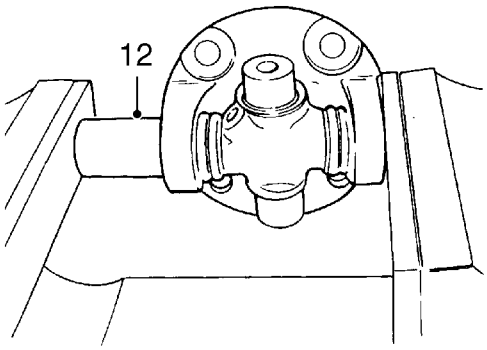

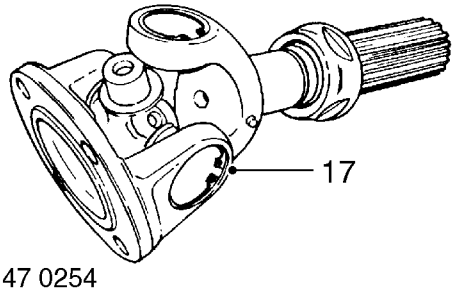

M47 0254

12. Enter new spider with seals into yokes of propeller shaft flange.
13. Partially insert one bearing cup into flange yoke and enter spider trunnion into bearing cup.
14. Insert opposite bearing cup into flange yoke.
15. Press both cups into place.
16. Press each cup into its respective yoke up to lower land of circlip groove. Damage may be caused to cups and seals if cups pass this point.
17. Fit circlips and check no end float exists.
18. Fit grease nipple and lubricate.
19. Repeat instructions for opposite end of propeller shaft as described in 3 to 9.
20. Fit rear propeller shaft. ***See Repair.***

51 - REAR AXLE AND FINAL DRIVE

CONTENTS

Page

DESCRIPTION AND OPERATION

DESCRIPTION 1

FAULT DIAGNOSIS

FAULT DIAGNOSIS 1

REPAIR

REAR AXLE 1
REAR HUB ASSEMBLY - 90 3
DIFFERENTIAL ASSEMBLY - 90 5

OVERHAUL

DIFFERENTIAL ASSEMBLY - 110/130 1
REAR HUB ASSEMBLY - 90 10
REAR STUB AXLE - 90 12
REAR STUB AXLE - 110/130 13

DESCRIPTION

The welded steel rear axle casing houses a separate spiral bevel type differential unit, which is off set to the right of the vehicle centre line. The differential unit drives the rear wheels via the axle shafts and fully floating hubs which are mounted on tapered roller bearings.

Lubrication

The differential is lubricated with oil and the hub bearings with grease.

The hub bearings are fitted with inner and outer seals. The outer seals prevent the differential oil mixing with the hub grease and the inner seals prevent dirt ingress into the hub.

Ventilation

Ventilation of the hub bearings is through the outer oil seals and the differential ventilation pipe, which terminates at a high level.

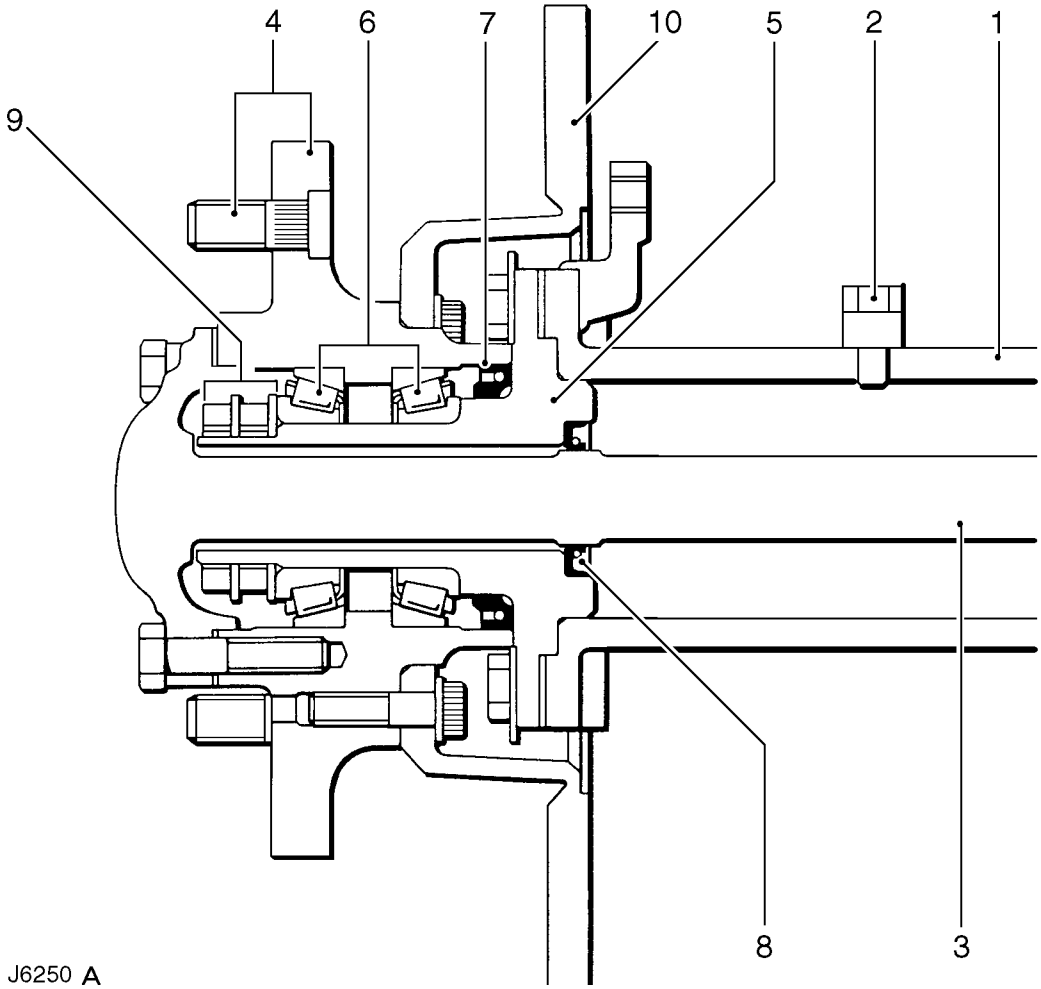

Rear axle hub - 90

1. Axle casing
2. Ventilation pipe
3. Axle shaft
4. Wheel studs and hub
5. Wheel bearing stub axle
6. Wheel bearings
7. Inner hub seal
8. Outer hub/axle shaft seal
9. Hub lock plate, thrust washer and nuts
10. Brake disc

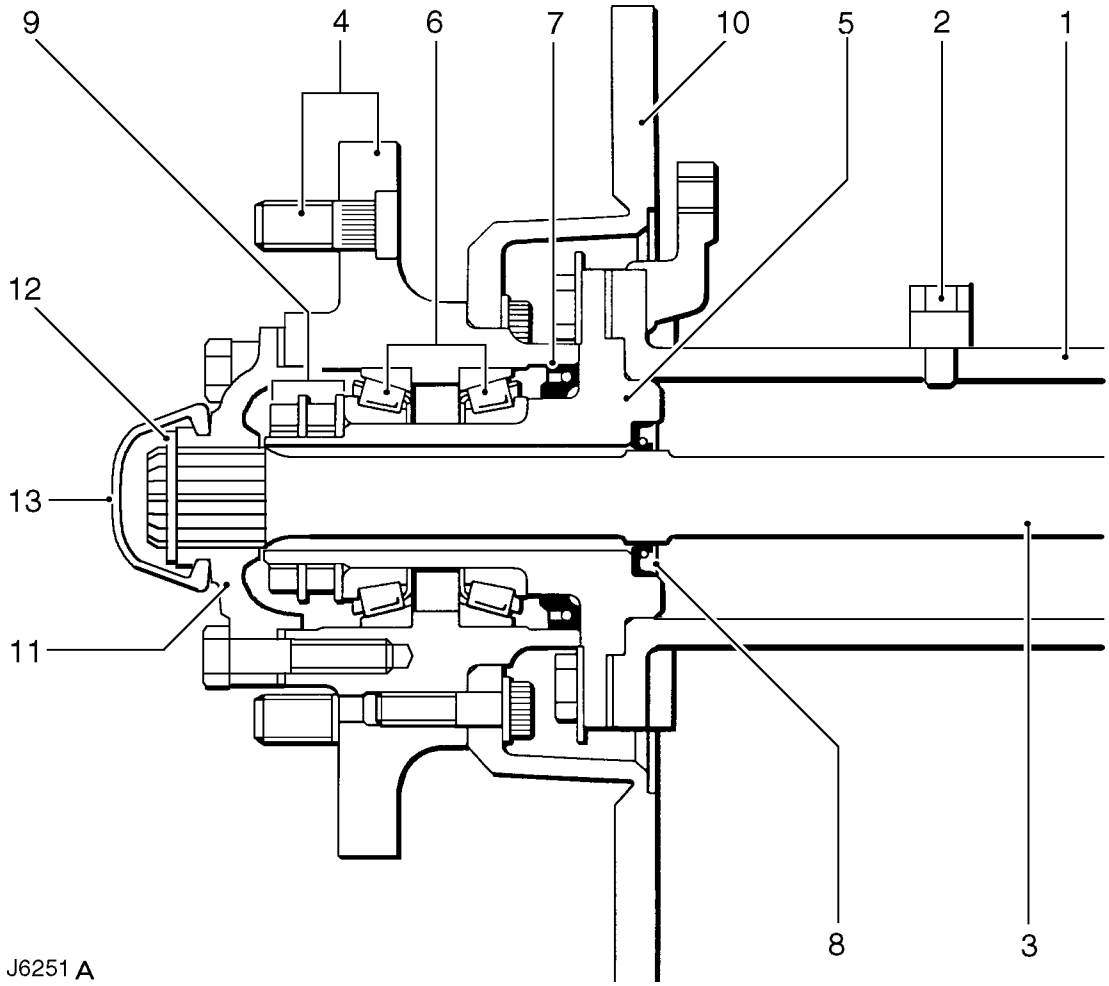

Rear axle hub - 110/130

1. Axle casing
2. Ventilation pipe
3. Axle shaft
4. Wheel studs and hub
5. Wheel bearing stub axle
6. Wheel bearings
7. Inner hub seal
8. Outer hub/axle shaft seal
9. Hub lock plate, thrust washer and nuts
10. Brake disc
11. Drive flange
12. Drive shaft circlip
13. Dust cap

FAULT DIAGNOSIS

Complaint - Oil leaks

An external leak of lubrication from the hub seals can be caused by a faulty internal seal. For example, if the seals which separate the differential from the hubs are faulty and the vehicle is operating or parked on an embankment, oil from the differential may flood one hub resulting in a lack of lubrication in the differential.

When a seal is found to be leaking check the axle ventilation system, as a blockage can cause internal pressure to force oil past the seals.

See 'Description and Operation' for illustrations of oil seal locations.

When investigating hub seal leaks check the grease for dilution with oil. Also check the differential oil level, for signs of metal particles in the oil and the condition of internal seals.

If the vehicle is driven in deep water with defective oil seals, water may contaminate the lubricants and raise the differential oil level, giving a false impression that the housing has been over filled.

Do not assume that a high oil level in the differential is due to over filling or, that a low level is because of an external leak.

REAR AXLE

Service repair no - 51.25.01

Remove

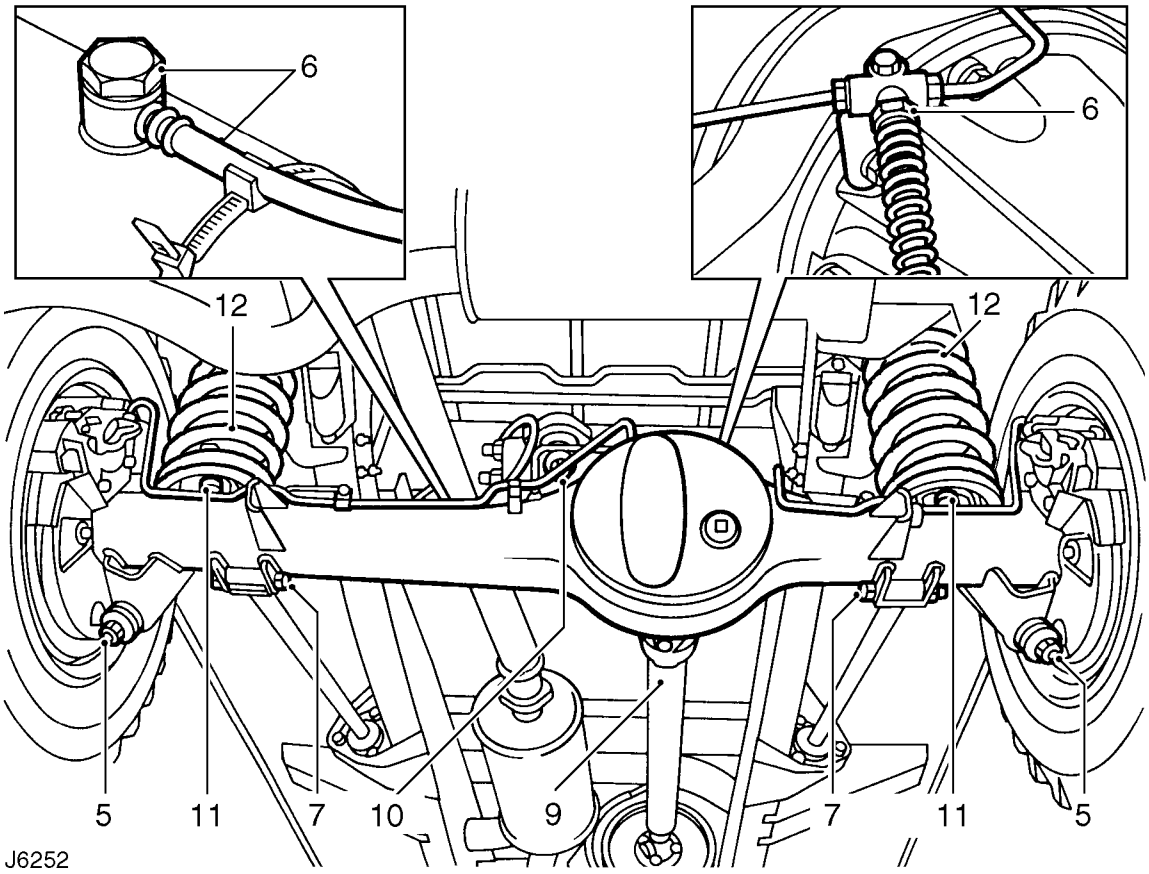

WARNING: Remove and refit of axle requires a further two persons to steady the axle when lowering or repositioning axle.

1. Drain brake system.
2. Support chassis rear.
3. Remove road wheels.
4. Support axle weight with hydraulic jack.
5. Disconnect shock absorbers.
6. Disconnect flexible brake hose at RH chassis side member and breather hose at banjo connection on axle casing.
7. Disconnect lower links at axle.
8. Mark differential and propeller shaft flanges with identification marks for assembly.
9. Remove 4 nuts and bolts, lower propeller shaft and tie to one side.
10. Disconnect pivot bracket ball joint at axle bracket.
11. Release bolts and remove coil spring retaining plates.
12. Lower axle and remove road springs.
13. If applicable, remove anti-roll bar links at axle ***See REAR SUSPENSION, Repair. anti-roll bar*** .
14. Remove axle assembly.

Refit

15. Position axle and fit lower links. Tighten fixings to ***176 Nm (130 lbf/ft).***
16. If applicable, fit anti-roll bar links to axle ***See REAR SUSPENSION, Repair. Anti-roll bar links*** .
17. Raise axle and locate road springs.
18. Fit coil spring retaining plates and secure with fixing bolts.
19. Secure pivot bracket ball joint to axle bracket. Tighten fixing to ***176 Nm (130 lbf/ft).***
20. Align propeller shaft to differential drive flange and tighten fixings to ***47 Nm (35 lbf/ft).***
21. Reconnect flexible brake hose and axle breather hose.
22. Refit shock absorbers.
23. Fit road wheels and tighten to correct torque:
    Alloy wheels - ***130 Nm (96 lbf/ft)***
    Steel wheels - ***100 Nm (80 lbf/ft)***
    Heavy Duty wheels - ***170 Nm (125 lbf/ft)***
24. Remove rear chassis support.
25. Bleed brake system ***See BRAKES, Repair. brake system bleed*** .

REAR HUB ASSEMBLY - 90

Service repair no - 64.15.01

Remove

1. Place rear axle onto axle stands and remove road wheel.
2. Release brake hose clips and remove brake caliper bolts. Secure to one side.

WARNING: Take care not to kink brake hose.

3. Remove 5 bolts and withdraw axle shaft.
4. Remove joint washer.
5. Bend back lock washer tabs.
6. Remove locknut and lock washer.
7. Remove hub adjusting nut.
8. Remove spacing washer.
9. Remove hub and brake disc assembly complete with bearings.

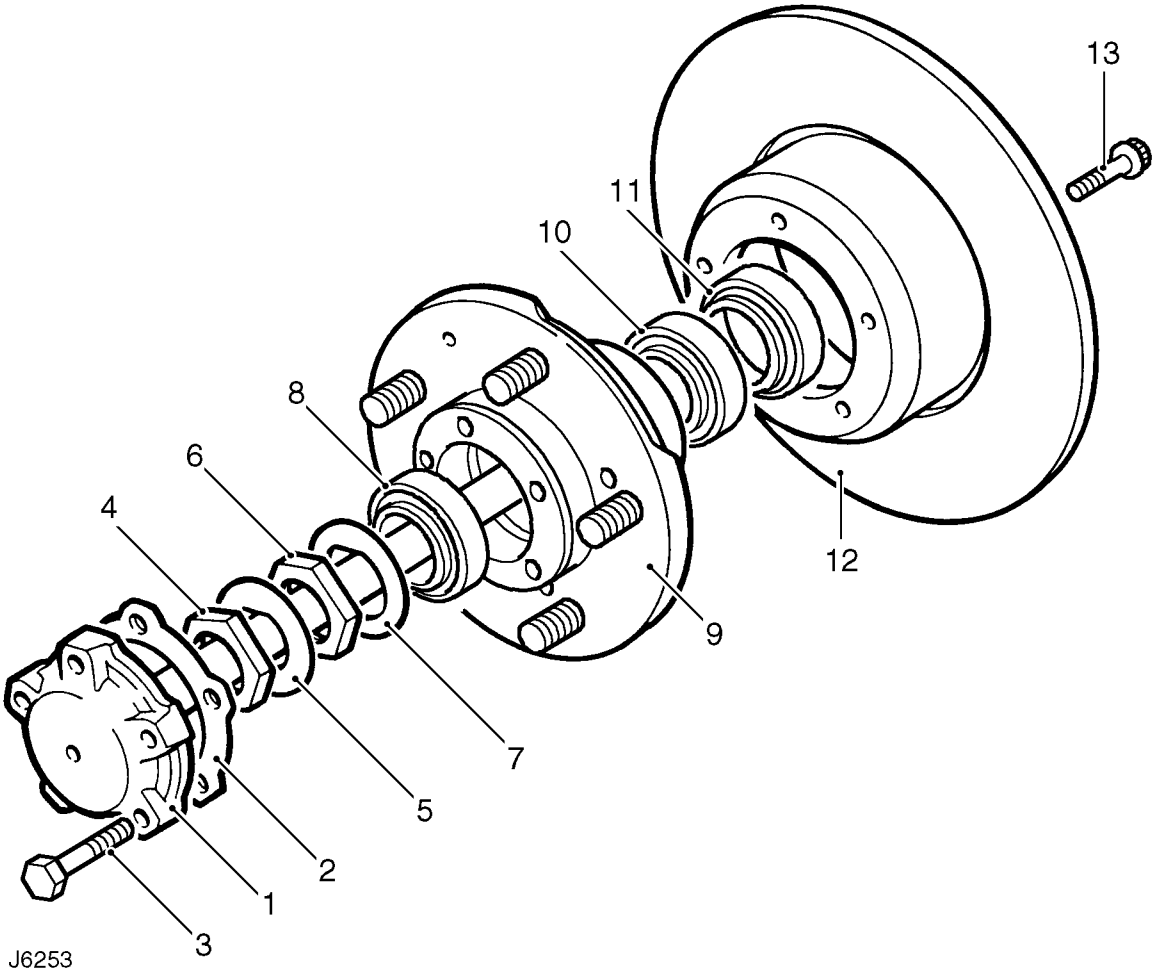

Rear hub components - 90

1. Axle shaft.
2. Axle shaft joint washer.
3. Axle shaft retaining bolt.
4. Lock nut.
5. Lock washer.
6. Hub adjusting nut.
7. Spacing washer.
8. Outer bearing.
9. Hub.
10. Inner bearing.
11. Grease seal.
12. Brake disc.
13. Disc retaining bolt.

Refit

10. Clean stub axle.
11. Fit hub assembly to stub axle.

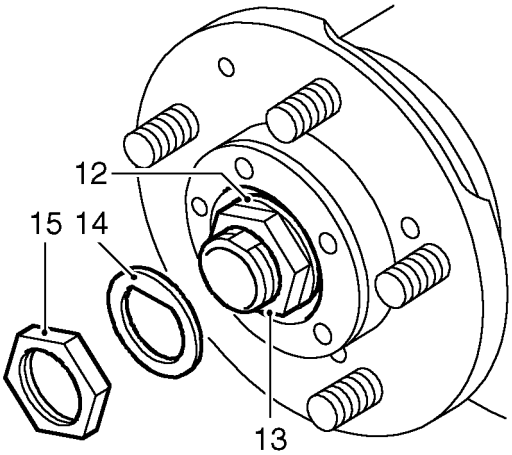

12. Fit spacing washer.
13. Fit hub adjusting nut. Tighten to ***50 Nm (37 lbf/ft).*** Ensure hub is free to rotate with no bearing play. Back off adjusting nut 90° and tighten to ***10 Nm (7 lbf/ft).***
14. Fit a new lock washer.
15. Fit locknut. Tighten to ***50 Nm (37 lbf/ft).***
16. Tab over lock washer to secure adjusting nut and locknut.
17. Using a new joint washer fit axle shaft to hub. Tighten bolts to ***65 Nm (48 lbf/ft).***
18. Fit brake caliper. Tighten bolts to ***82 Nm (61 lbf/ft).*** Secure brake pipes to axle casing.
19. Fit road wheel, remove axle stands and tighten road wheel nuts to correct torque:
    Alloy wheels - ***130 Nm (96 lbf/ft)***
    Steel wheels - ***100 Nm (80 lbf/ft)***
    Heavy duty wheels - ***170 Nm (125 lbf/ft)***
20. Operate foot brake to locate brake pads before driving vehicle.

DIFFERENTIAL ASSEMBLY - 90

Service repair no - 51.15.01

Remove

1. Using suitable container, drain axle oil.
2. Mark differential and propeller shaft flanges to facilitate reassembly.

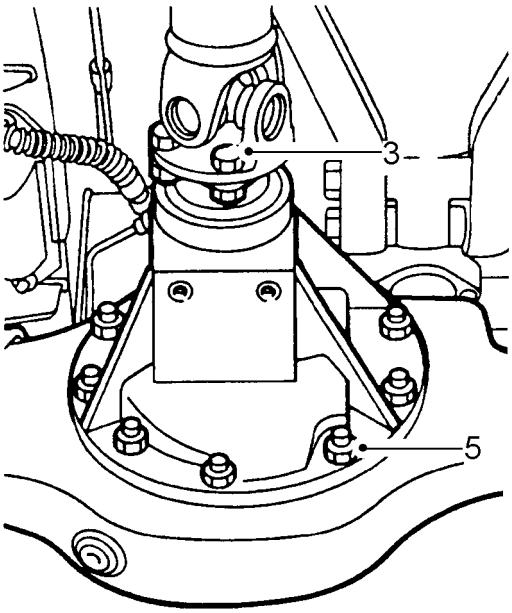

51M0028

3. Remove 4 bolts and disconnect propeller shaft from differential. Tie aside.
4. Remove 5 hub drive member bolts and withdraw axle half shafts sufficiently to disengage from differential unit.
5. Remove 10 nuts securing differential to axle case.
6. Withdraw differential unit.

NOTE: The differential unit can only be serviced as a complete assembly with matching drive pinion. For advice ring Land Rover Service Department.

Refit

7. Ensure mating faces are clean and apply a bead of RTV sealant to axle case.
8. Support differential unit and position on axle casing.
9. Secure with self locking nuts and tighten to ***40 Nm (30lbf/ft).***
10. Align marks on flanges and secure propeller shaft to differential. Tighten bolts to ***48 Nm (35 lbf/ft).***
11. Refit half shafts, using new drive member gaskets. Tighten bolts to ***65 Nm (48 lbf/ft).***
12. Refill axle oil with approved lubricant ***See LUBRICANTS, FLUIDS AND CAPACITIES, Information. Recommended lubricants and fluids*** .

DIFFERENTIAL ASSEMBLY - 110/130

Service repair no - 51.15.07

Overhaul

1. Drain off differential lubricating oil, and refit plug.
2. Remove rear axle assembly from vehicle ***See Repair. Rear axle***
3. Remove hub driving member fixings.
4. Withdraw driving member and axle shaft sufficiently to disengage differential.
5. Repeat instruction 4 for other axle shaft.

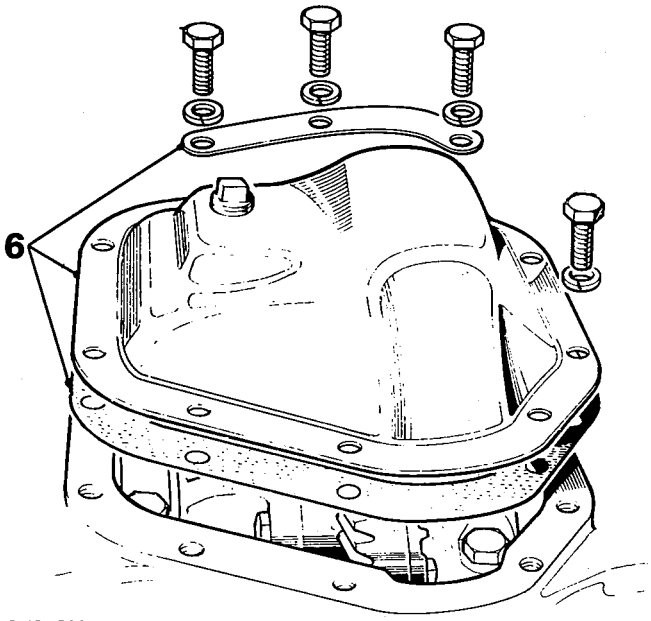

ST650M

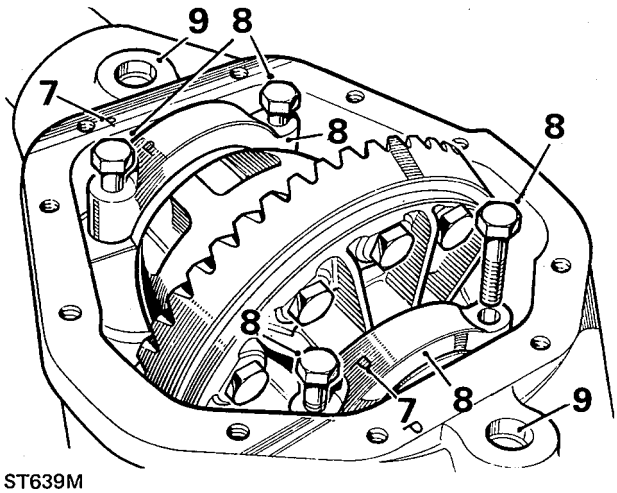

ST639M

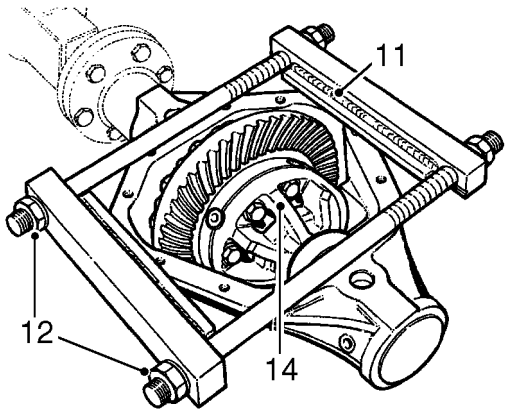

M54 0202

6. Remove fixings and support strip at differential cover and withdraw cover and joint washer.
7. Note relationship marking on bearing caps and axle casing to ensure correct refitting.
8. Remove fixings and withdraw differential bearing caps.
9. Clean out and examine spreader tool peg holes provided in gear casing face; ensure that holes are free from dirt and burrs and damage.
10. Ensure that turnbuckle adjuster is free to turn.

Using axle compressor LRT-51-503

11. Place tool on to differential casing, as illustrated, with weld seam uppermost. Ensure that plates rest squarely on differential machined surface and end bars butt against edges of casing.
12. Tighten adjusting nuts by hand only, until all slack is taken up.
13. Continue to tighten both nuts alternately with a spanner, one flat at a time, to a maximum of three flats.
14. Carefully lever-out differential assembly.

CAUTION: To prevent permanent damage to the gear carrier case, it must not be over-stretched. Each flat on the turnbuckle is numbered to enable a check to be made on the amount turned. The maximum stretch permitted is 0,30 mm, equivalent to three flats.

15. Ease off adjuster and remove spreader.

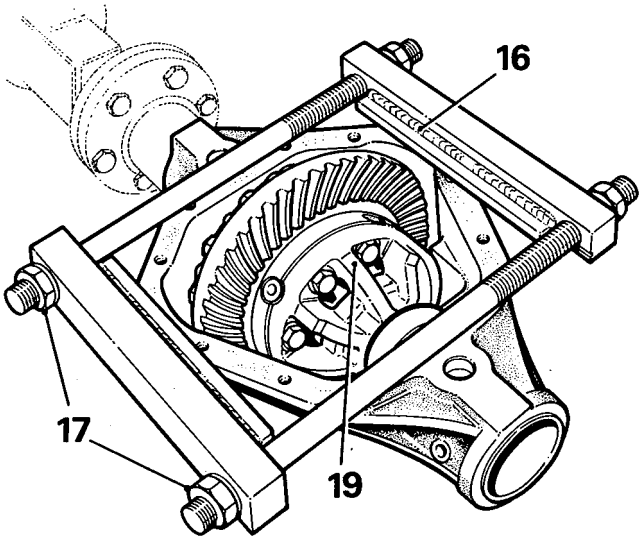

ST597M

Using axle compressor LRT-51-503

16. Place tool on to differential casing, as illustrated, with weld seam uppermost. Ensure that plates rest squarely on differential machined surface and end bars butt against edges of casing.
17. Tighten adjusting nuts by hand only, until all slack is taken up.
18. Continue to tighten both nuts alternately with a spanner, one flat at a time, to a maximum of three flats.
19. Carefully lever-out differential assembly.

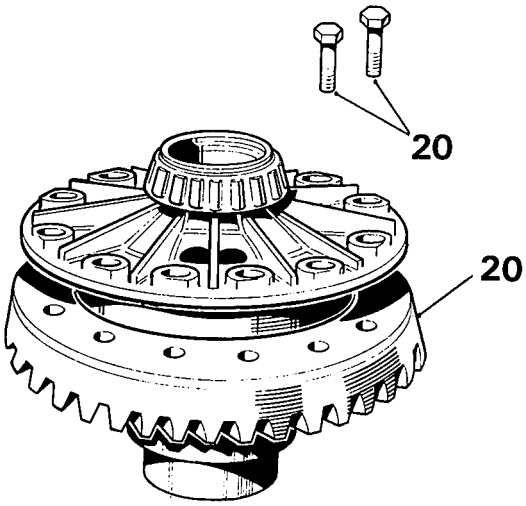

ST652M

Dismantle differential

20. Add alignment marks between crown wheel and differential case for reassembly purposes, then remove fixings and withdraw crown wheel.

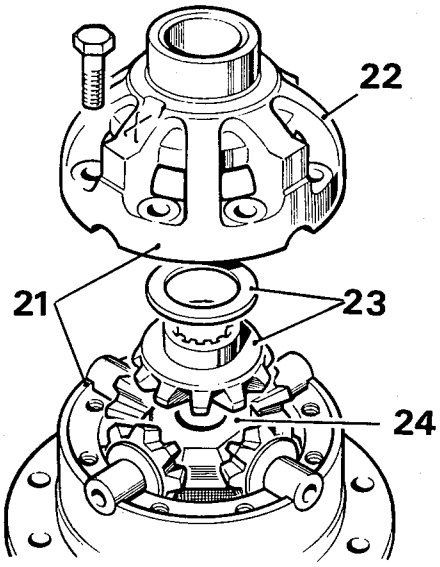

ST653M

21. Note alignment markings on two differential casings to ensure correct refitting, then remove fixings.
22. Lift off upper case.
23. Withdraw upper differential wheel and thrust washer.
24. Lift out cross-shaft and pinions.

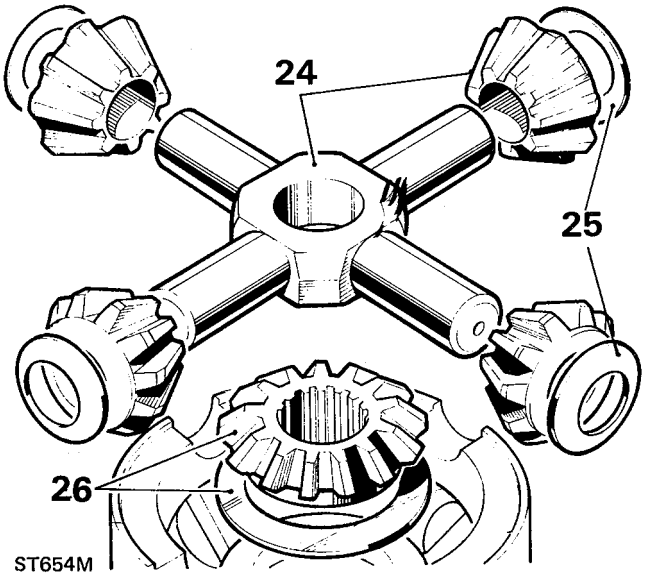

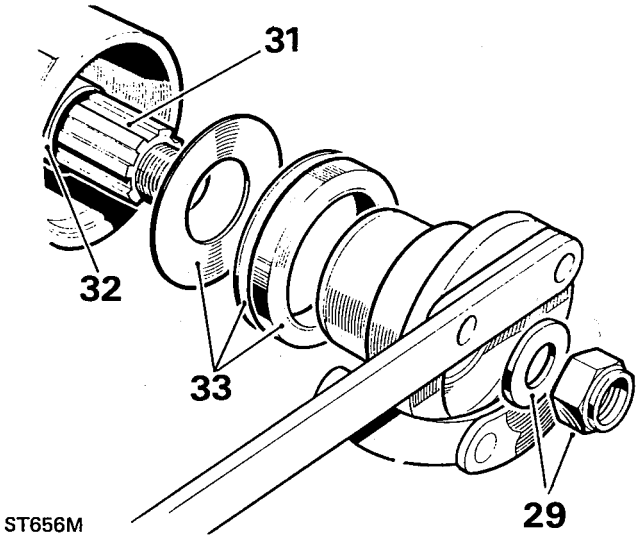

25. Withdraw four dished thrust washers.
26. Withdraw lower differential wheel and thrust washer.

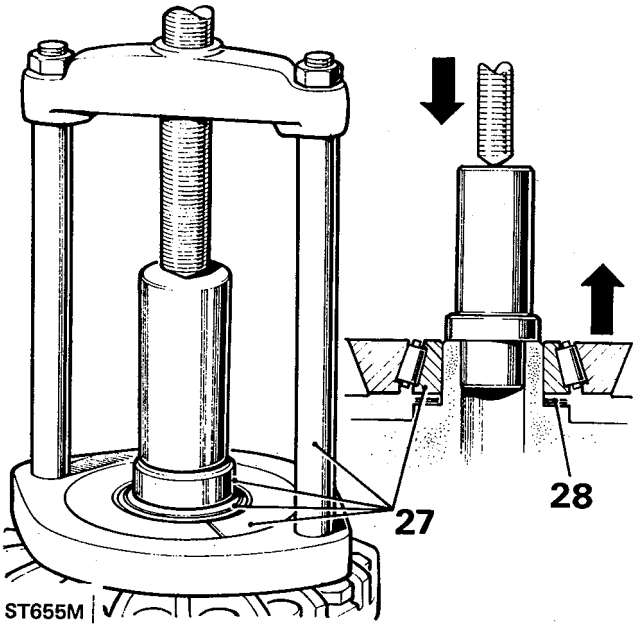

27. Remove differential bearing cones using **LRT-51-500**, adaptors 1 and 2 and press **LRT-99-002**.
28. Withdraw shim washers fitted between bearing cones and differential casings.

Remove final drive pinion

29. Using **LTR-51-003** to prevent coupling flange from rotating, remove flange locknut and plain washer.
30. Support drive pinion and remove coupling flange by tapping with a hide hammer.
31. Withdraw drive pinion together with inner bearing cone.
32. Withdraw and discard collapsable bearing spacer.
33. Withdraw oil seal, gasket and oil thrower.

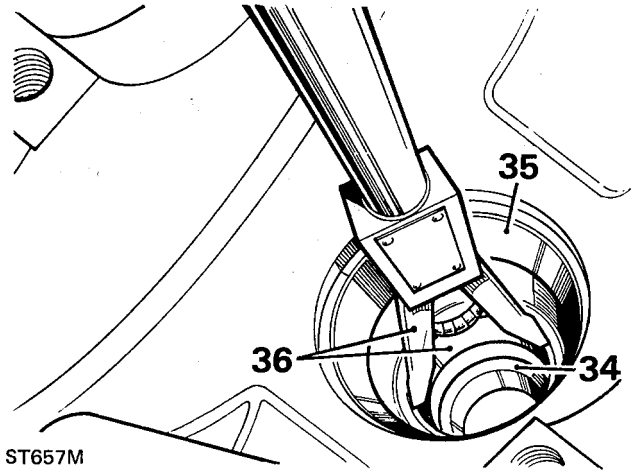

34. Withdraw outer bearing cone.
35. Using **LRT-51-502**, extract pinion inner bearing cup and shim washers from casing. Note shim washer thickness.
36. Extract pinion outer bearing cup from casing using **LRT-51-502**.

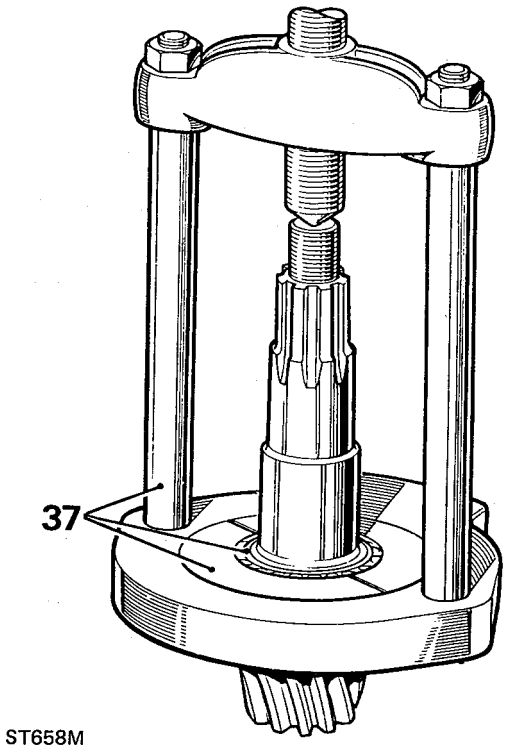

37. Using **LRT-51-500** and press **LRT-99-002**, remove inner bearing cone from pinion.

INSPECTION

38. Examine all components for obvious wear or damage.
39. Bearing cones must be a press fit on their locations, except drive pinion flange and bearing which is a slide fit.
40. The crown wheel and pinion are supplied as a matched pair and must not be interchanged separately. A new crown wheel and pinion matched pair may be fitted to an original gear carrier casing if sound. original crown wheel and pinion, if sound, may be fitted into a replacement casing.
41. The two parts of differential unit casing are matched and must not be replaced separately.
42. Discard and renew all thrust washers.
43. Differential housings with worn thrust washer seatings must be replaced as a pair.
44. Examine differential case to crown wheel joint face for burrs and damage which could lead to crown wheel run-out when fitted.

ASSEMBLE

Differential

45. Fit differential lower wheel and thrust washer to differential case. See illustration following instruction 23.
46. Fit dished thrust washers.
47. Fit cross-shaft and pinions.
48. Fit differential upper wheel and thrust washer.
49. Fit differential upper case lining-up marks.
50. Secure assembly with bolts using Loctite 'Studlock' grade CVX on threads and tighten evenly and diametrically to ***95 Nm (70 lbf/ft).***

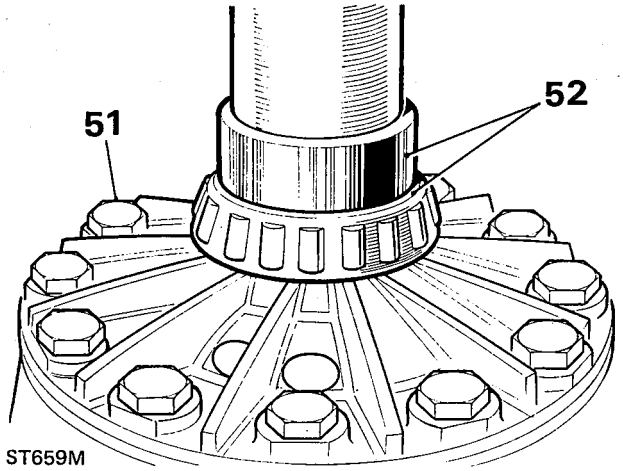

51. Fit crown wheel to differential casing. Use Loctite 'Studlock' grade CVX on fixing bolt threads and tighten to correct torque.
52. Press on differential roller bearing cones less shim washers, using **LRT-51-504**, and leave to one side until required for instruction 96.
53. Fit bearing cups to differential.
54. Fit differential unit and bearings to gear carrier casing, and rotate unit to centralize bearings. Do not fit bearing caps.

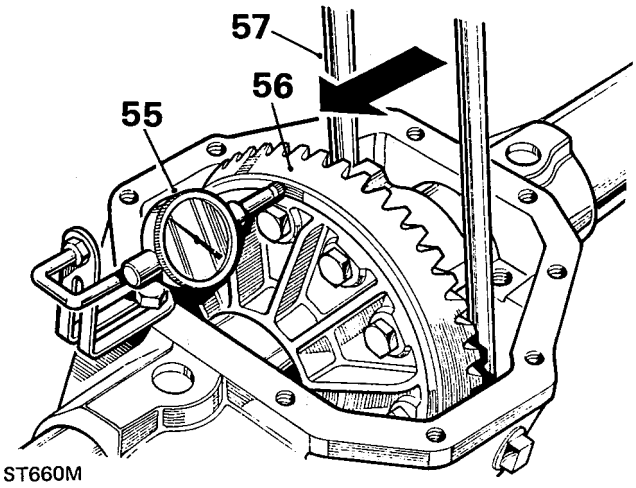

55. Position a suitable dial gauge indicator on casing with stylus registering on back face of crown wheel.
56. Rotate differential and check total indicated run-out on crown wheel back face. This must not exceed 0,05 mm. If run-out is excessive, check mating faces for dirt and damage; if necessary, select a new radial position for crown wheel. When satisfactory, continue with following check.

Differential bearing adjustment

57. Insert two levers between casing and differential unit at one side.
58. Move differential unit fully to one side of casing; do not tilt unit.
59. Rotate differential unit to settle bearings, continue to lever differential to side, then zero dial gauge indicator.
60. Lever assembly fully to other side of casing, rotate unit to settle bearings, then note total indicator reading.
61. Add 0,127 mm, for bearing pre-load, to total noted in preceding instruction. The sum is then equal to nominal value of shims required for differential bearings. Shims are available in range 0,07 mm, 0,12 mm, 0,25 mm and 0,76 mm. Select total value of shims required.
62. Remove differential unit and bearings and place aside. Do not fit shim washers until subsequent 'Differential backlash' checks have been made, instructions 96 to 102.

Fit drive pinion

63. Select shim washers of same thickness value as those removed from under pinion inner cup, instruction 35, and place ready for fitting.

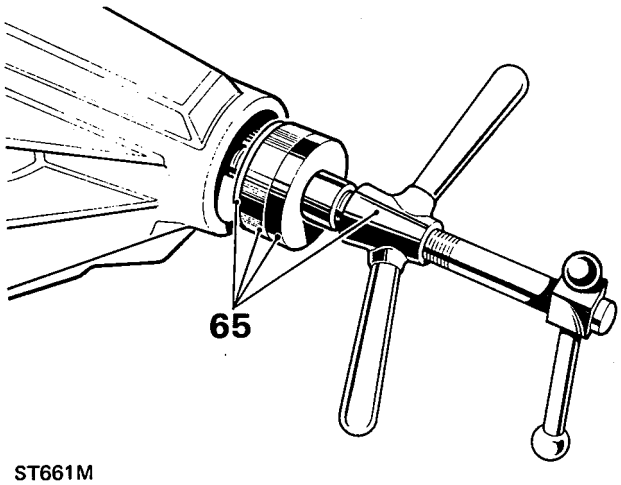

64. Position outer bearing replacer **LRT-51-505**, detail 2, and outer bearing cup on press **LRT-99-502**.
65. Locate assembly into pinion housing nose.
66. Place selected shim washers on to inner bearing cup seating.

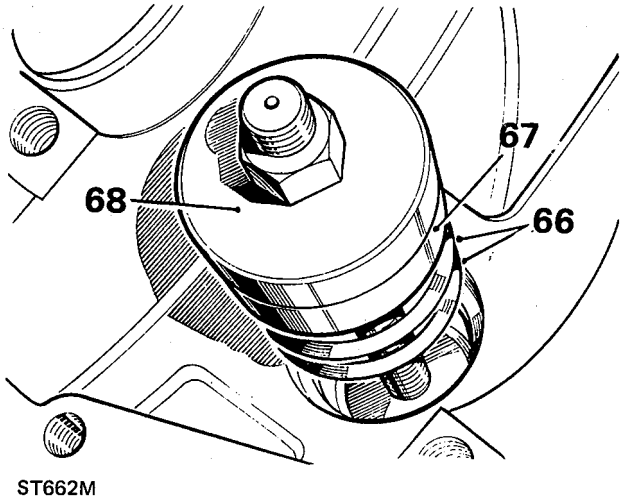

67. Position inner bearing cup in casing.
68. Position inner bearing replacer **LRT-51-505**, detail 1, onto **LRT-99-502** and secure with fixing nut.
69. Hold still centre screw and turn butterfly lever to draw in bearing cups.

Note: If above tools are not available, a suitable piece of tubing, positioned on bearing inner race and a hand press may be used.

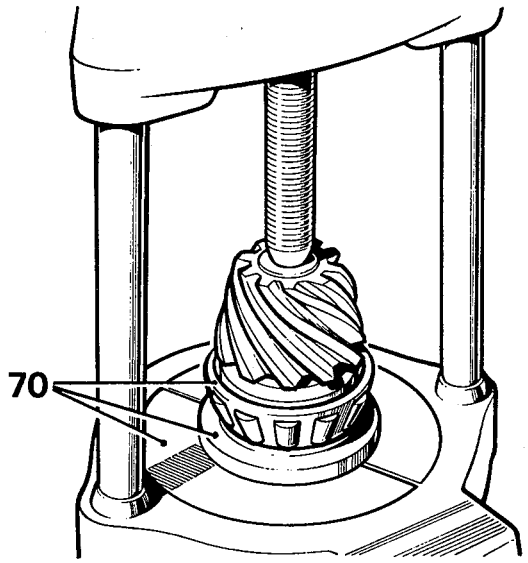

ST638M

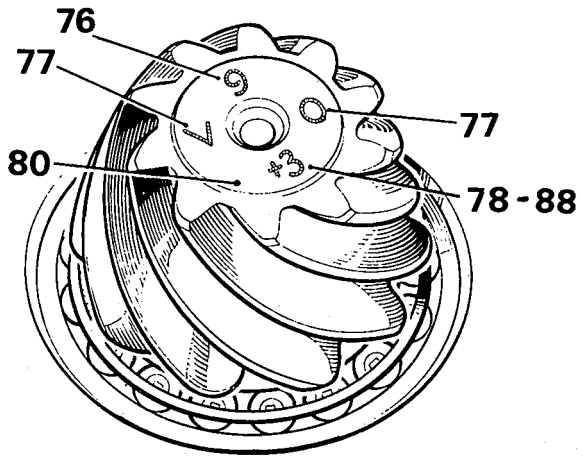

ST649M

70. Support inner bearing on bed of hand press and press drive pinion into bearing.
71. Position pinion and bearing in casing; omit collapsable spacer at this stage.
72. Fit outer bearing cone onto pinion.
73. Fit coupling flange and plain washer and loosely fit flange nut.
74. Tighten coupling flange locknut to remove end-float from pinion.
75. Rotate pinion to settle bearings and slowly tighten flange locknut. Use a spring balance to obtain a torque resistance of 11 Kgf/cm (18 lbf/in) to rotate pinion.

Drive pinion markings

76. Check that serial number marked on pinion end face matches that marked on crown wheel.
77. The markings on end face adjacent to serial number are of no significance during servicing.
78. The figure marked on end face opposite to serial number indicates, in thousandths of an inch, deviation from nominal required to correctly set pinion. A pinion marked plus (+) must be set below nominal, a minus (-) pinion must be set above nominal. An unmarked pinion must be set at nominal.

79. The nominal setting dimension is represented by setting gauge block **LRT-54-503**, which is referenced from pinion end face to bottom radius of differential bearing bore.

Drive pinion adjustment

80. Ensure that pinion end face is free of raised burrs around etched markings.
81. Remove keep disc from magnetized base of dial gauge tool **LRT-99-006**.
82. Place dial gauge and setting gauge **LRT-54-503** on a flat surface and zero dial gauge stylus on to setting gauge.

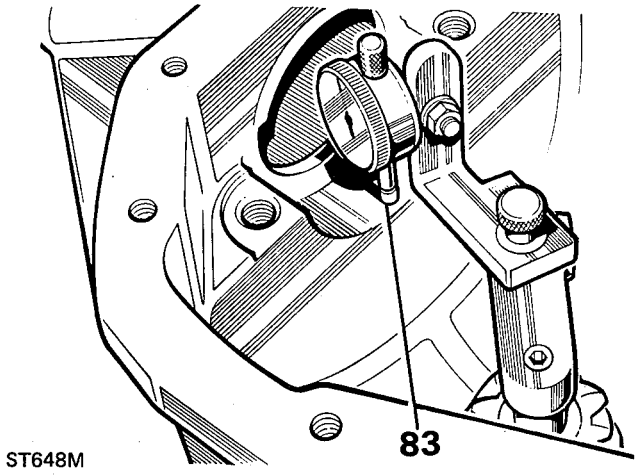

ST648M

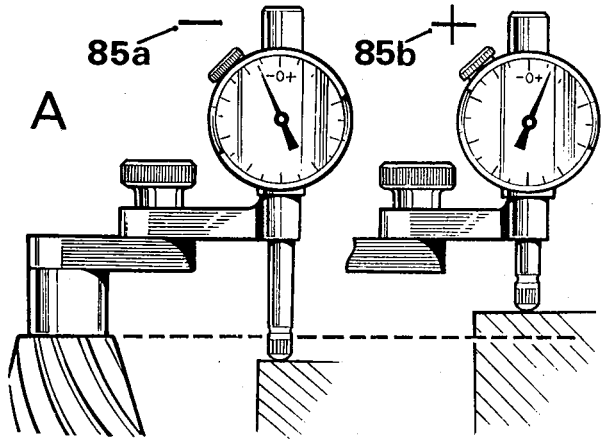

ST645M

83. Position dial gauge centrally on pinion end face with stylus registering on lowest point on one differential bearing bore. Note dial gauge deviation from zeroed setting.

84. Repeat on other bearing bore. Add together readings, then halve sum to obtain mean reading. Note whether stylus has moved up or down from zeroed setting.

Example 1

Reading obtained LH side..... + 0.1524mm
Reading obtained RH side..... - 0.0762mm

Add + 0.1524mm - 0.0762mm = + 0.0762mm

Divide by 2 (0.0762 divided by 2)= 0.0381mm

Therefore subtract 0.0381mm from shim thickness behind pinion inner bearing track.

Example 2

Reading obtained LH side..... + 0.1524mm
Reading obtained RH side..... - 0.2032mm

Add + 0.1524mm - 0.2032mm = + 0.0508mm

Divide by 2 (0.0508 divided by 2)= 0.0254mm

Therefore add 0.0254mm from shim thickness behind pinion inner bearing track.

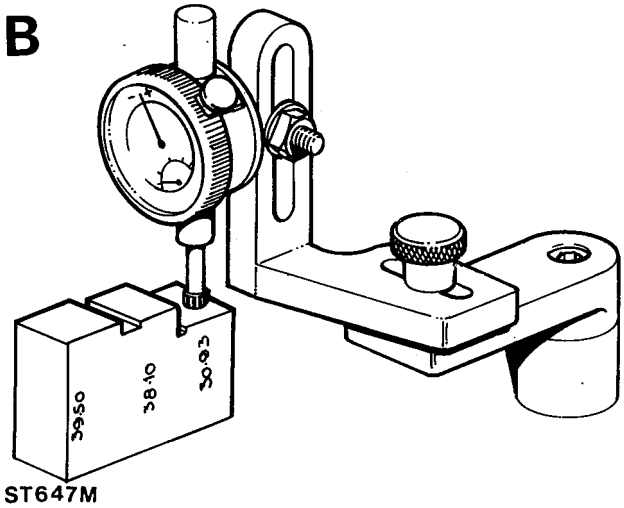

ST647M

Pinion height setting block LRT-54-503

85. Where stylus has moved down (85a), amount is equivalent to thickness of shims that must be removed from under pinion inner cup to bring pinion down to nominal position. Where stylus has moved up (85b), amount is equivalent to additional thickness of shims required to bring pinion up to nominal position.

Ensure that height marked 30.93 mm is used for this differential.

86. Before adjusting shim thickness, check pinion face marking and if it has a plus (+) figure, subtract that from shim thickness figure obtained in previous instruction. Alternatively if pinion has a minus (-) figure, add amount to shim thickness figure.

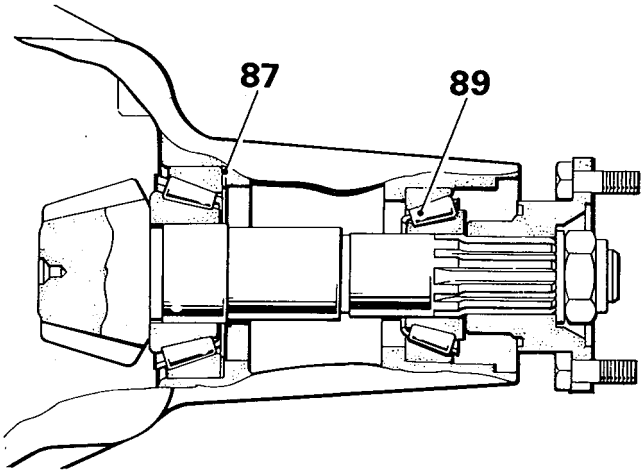

ST646M

87. Adjust shim thickness under pinion inner cup as necessary, by amount determined in instructions 85 and 86.
88. Recheck pinion height setting instructions 82 to 84. If setting is correct, mean reading on dial gauge will agree with figure marked on pinion end face. For example, with an end face marking of +3, dial gauge reading should indicate that pinion is 0.003 in (0.0762 mm) below nominal.
89. When pinion setting is satisfactory, temporarily remove pinion outer bearing.
90. Fit a new collapsable bearing spacer, flared end outward, to drive pinion and refit outer bearing.
91. Fit pinion oil seal.
92. Fit oil seal gasket.
93. Fit pinion oil seal, lipped side first, using general purpose grease or, where available, a molybdenum disulphide based grease on seal lip, using **LRT-51-002** to drift in seal.
94. Fit coupling flange and plain washer and loosely fit a new flange nut. Secure **LRT-51-003** to coupling flange, using slave fixings.

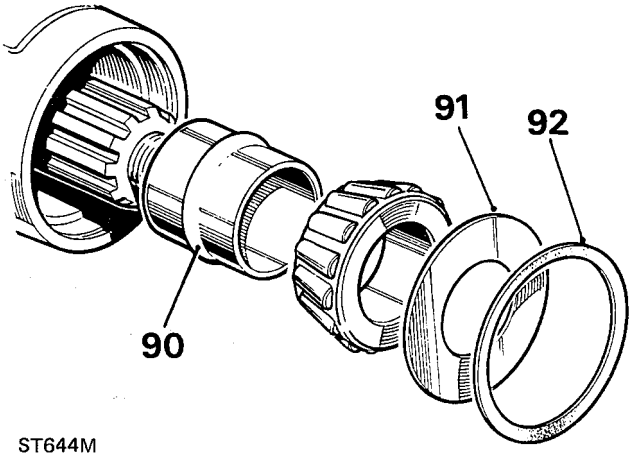

ST644M

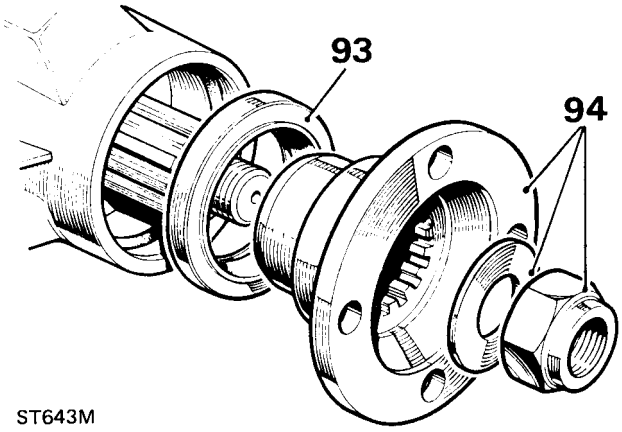

ST643M

95. Alternately tighten flange nut and check drive pinion resistance to rotation until following figures are achieved, as applicable:
A. Assemblies re-using original pinion bearings: 17,3 to 34,5 kgf cm.
B. Assemblies with new pinion bearings: 34,5 to 46,0 kgf cm.

NOTE: Once the bearing spacer has started to collapse the torque resistance build-up is rapid, therefore check frequently, using a spring balance, to ensure the correct figures are not exceeded, otherwise a new collapsable bearing spacer will be required.

Differential backlash checks

96. Pick up differential unit as left after instruction 52.

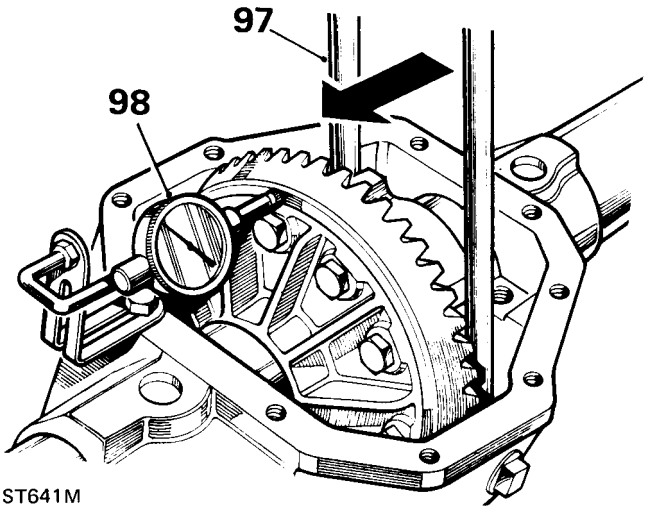

97. Fit differential unit and lever unit away from drive pinion until opposite bearing cup is seated against housing. Do not tilt unit.
98. Install a dial gauge on casing with its stylus resting on back face of crown wheel. Zero the gauge.
99. Lever differential unit to engage crown wheel teeth in full mesh with drive pinion teeth. Do not tilt unit.
100. Note total reading obtained on dial gauge.
101. From this figure subtract 0,25 mm to obtain correct crown wheel backlash when fitted. The result indicates value of shimming to be fitted between differential case and bearing cone at crown wheel side of differential.
102. Fit shim value determined in instruction 101, taking shims from pack previously determined during 'Differential bearing adjustment' checks, instructions 57 to 62 **LRT-51-500** details 1 and 2, press **LRT-99-002**, and **LRT-51-504**.
103. Fit remaining shims from instruction 101 to opposite side of differential. **LRT-51-501** details 1 and 2, press **LRT-99-002**, and **LRT-51-504**.
104. Fit differential unit with shims and bearings to axle casing, using axle compressor **LRT-51-503** .
105. Remove axle compressor
106. Fit bearing caps in their correct position, referring to relationship markings on caps and on axle casing.
107. Tighten bearing caps fixings to ***135 Nm (100 lbf/ft).***

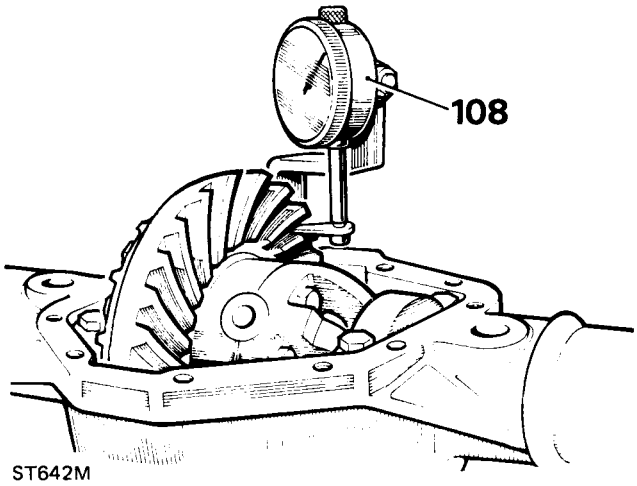

108. Mount a dial gauge on axle casing with stylus resting on a crown wheel tooth.
109. Prevent drive pinion from rotating and check crown wheel backlash which must be 0,15 to 0,27 mm. If backlash is not within specified limits, repeat differential backlash checks, instructions 96 to 102 looking for possible errors.
110. Fit differential cover and new gasket, coating both sides of gasket with Hylomar PL 32M or an equivalent non-setting sealant. Torque load for fixings is ***30 Nm (22 lbf/ft).***
111. Reverse instructions 3 to 5 and coat threads of hub driving member bolts with Loctite 'Studlock' grade CVX and fit and tighten bolts evenly to correct torque.
112. Fit rear axle assembly to vehicle ***See Repair. Rear axle*** .
113. Replenish differential with recommended lubricant ***See LUBRICANTS, FLUIDS AND CAPACITIES, Information. Recommended lubricants and fluids*** . After initial axle run, check oil level and replenish as necessary to filler/level plug hole.
114. Where major running parts have been replaced during servicing, it is a recommended practice to allow axle assembly to 'run in' by avoiding, where possible, heavy loads and high speeds during initial running.

REAR HUB ASSEMBLY - 90

Service repair no - 64.15.13.

1. Remove rear hub ***See Repair. Rear hub assembly*** .
2. Remove outer bearing.
3. Mark, for reassembly, position of hub to brake disc.
4. Remove 5 bolts and separate hub from brake disc.

WARNING: A maximum of two road wheel retaining studs can be renewed. Should more studs be unserviceable fit new hub with studs.

5. Remove grease seal and inner bearing from hub.
6. Remove inner and outer bearing tracks.

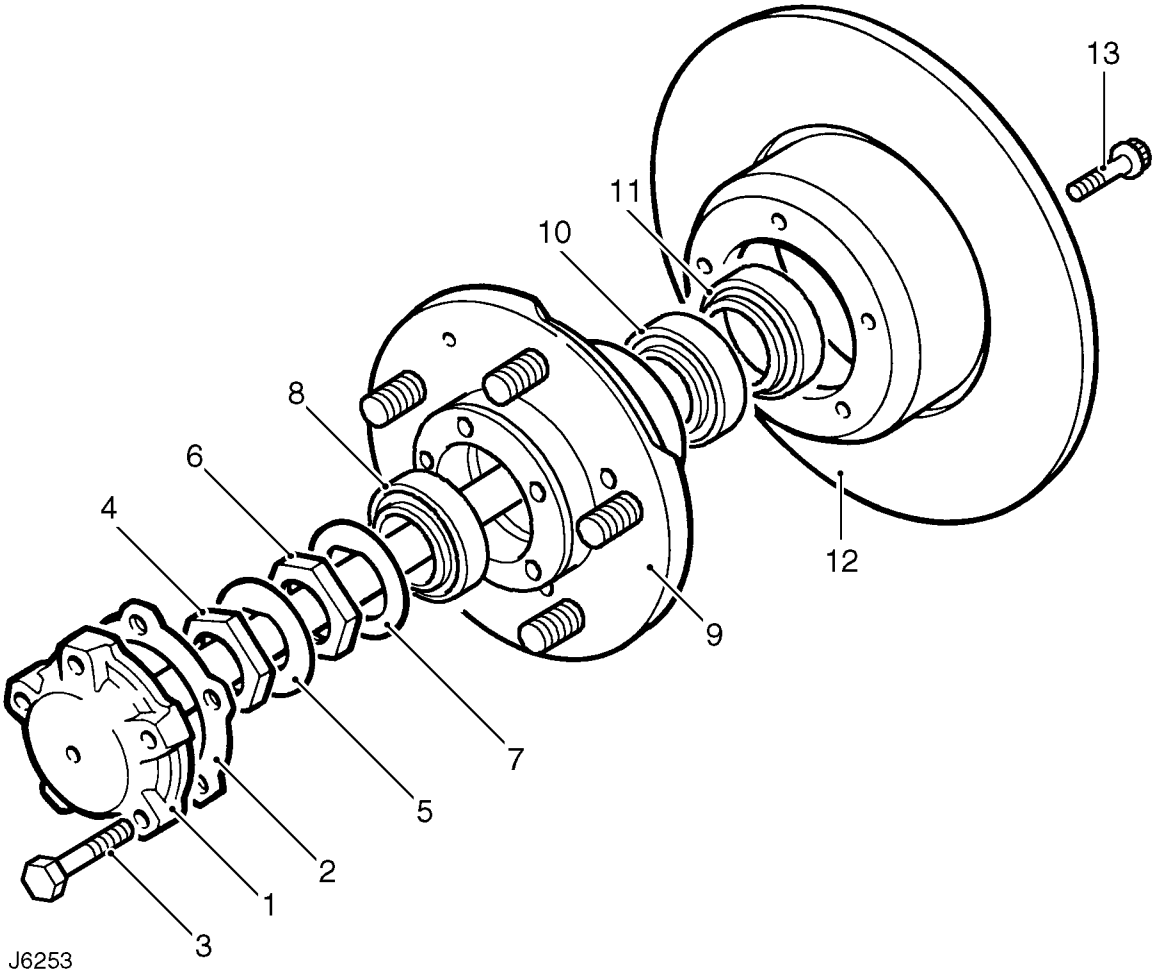

REAR HUB COMPONENTS - 90

1. Axle shaft.
2. Axle shaft joint washer.
3. Axle shaft retaining bolt.
4. Lock nut.
5. Lock washer.
6. Hub adjusting nut.
7. Spacing washer.
8. Outer bearing.
9. Hub.
10. Inner bearing.
11. Grease seal.
12. Brake disc.
13. Disc retaining bolt.

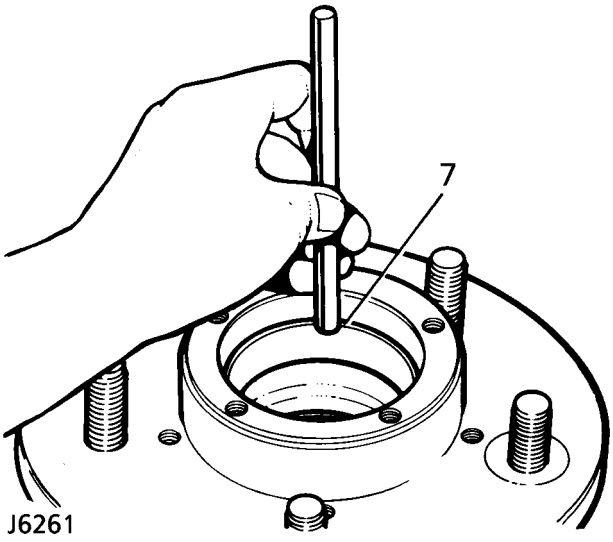

Refit

7. Clean hub and fit inner and outer bearing tracks.
8. Pack hub inner bearing with grease and fit to hub.

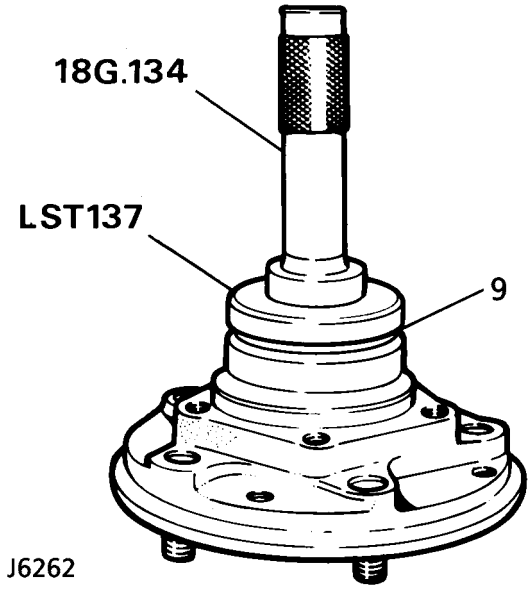

9. With lip side leading, fit a new seal flush with rear face of hub. Using service tool **LRT-54-003 (LST137)** seal replacer and drift. Apply grease between seal lips.
10. Assemble brake disc to hub, line up reassembly marks. Applying Loctite 270, fit and tighten retaining bolts to ***73 Nm (54 lbf/ft).***
11. Pack hub outer bearing with grease and fit to hub.
12. Fit rear hub assembly ***See Repair. Rear hub assembly*** .

REAR STUB AXLE - 90

Service repair no - 64.15.22.

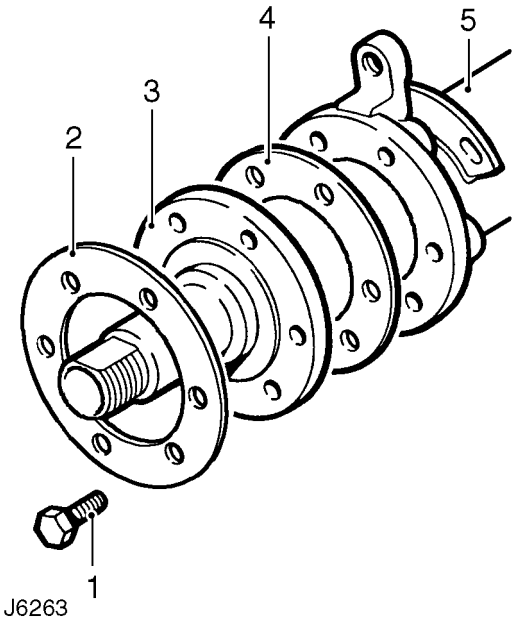

STUB AXLE COMPONENTS

1. Stub axle to axle casing bolt.
2. Mud shield.
3. Stub axle.
4. Stub axle joint washer.
5. Axle case.

Overhaul

1. Remove hub assembly ***See Repair. Rear hub assembly*** .
2. Remove 6 bolts from stub axle to axle casing.
3. Remove mud shield.
4. Remove stub axle and joint washer.

Renew rear stub axle oil seal

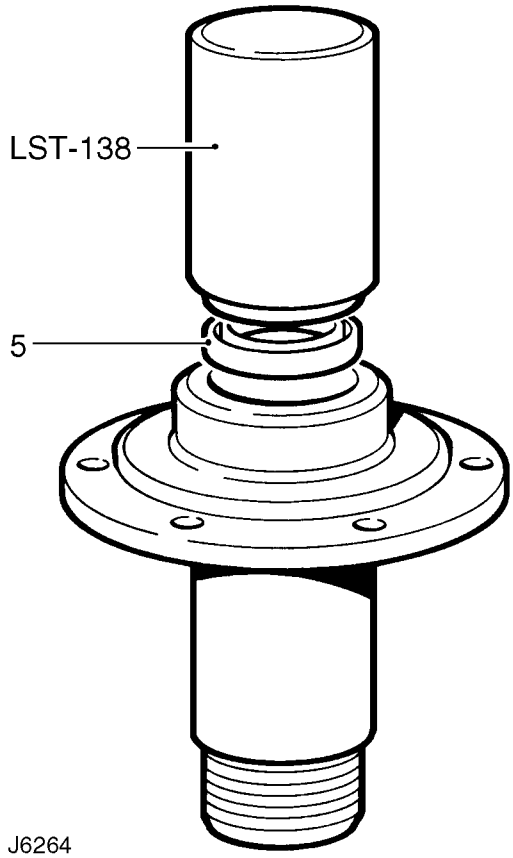

5. Remove and discard oil seal. Lubricate seal and lip with EP90 oil. Using special tool **LRT-51-004 (LST 138)** fit new oil seal lip side trailing so that seal is flush with rear face of stub axle.

Refit

6. Fit new joint washer, stub axle and mud shield bolts. Tighten bolts to ***65 Nm (48 lbf/ft).***
7. Refit hub assembly ***See Repair. Rear Hub Assembly*** .

REAR STUB AXLE - 110/130

Service repair no - 64.15.22

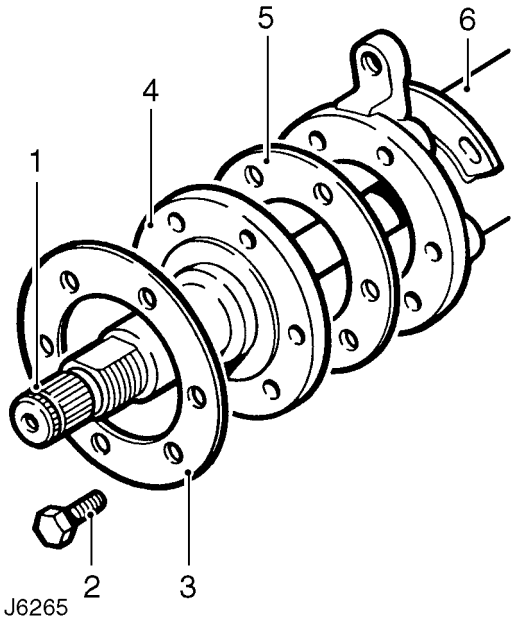

STUB AXLE COMPONENTS

1. Rear axle shaft
2. Stub axle to axle casing bolt
3. Mud shield
4. Stub axle
5. Stub axle joint washer
6. Axle case

Overhaul

1. Remove hub assembly ***See REAR SUSPENSION, Repair. Rear hub bearing*** .
2. Remove 6 bolts from stub axle to axle casing.
3. Remove mud shield.
4. Remove stub axle and joint washer.
5. Remove rear axle shaft from axle casing.

Renew rear stub axle oil seal

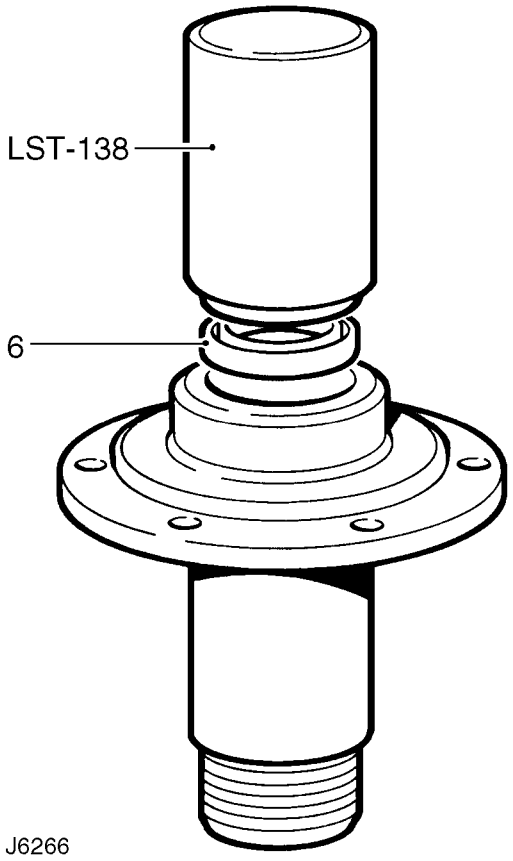

6. Remove and discard oil seal. Lubricate seal and lip EP90 oil. Using special tool **LRT-51-004** (LST138) fit new seal lip side trailing so that seal is flush with rear face of stub axle.

Refit

7. Fit new joint washer, stub axle and mud shield. Tighten bolts to ***65 Nm (48 lbf/ft).***
8. Fit rear axle shaft, avoid damaging stub axle seal.
9. Refit hub assembly ***See REAR SUSPENSION, Repair. Rear hub bearing*** .

54 - FRONT AXLE AND FINAL DRIVE

CONTENTS

Page

DESCRIPTION AND OPERATION

DESCRIPTION 1

FAULT DIAGNOSIS

FAULT DIAGNOSIS 1

REPAIR

FRONT AXLE ASSEMBLY 1

OVERHAUL

FRONT DIFFERENTIAL 1
FRONT HUB 1
FRONT STUB AXLE, CONSTANT VELOCITY JOINT AND SWIVEL PIN HOUSING 3

DESCRIPTION

The welded steel front axle casing houses a separate spiral bevel type differential unit, which is off-set to the right of the vehicle centre line. The differential unit drives the front wheels via the axle shafts and constant velocity joints which are totally enclosed in the spherical and swivel housings.

The front wheels are pivoted on tape roller bearings at the top and bottom of the swivel housing. The wheel hubs on all axles are supported by two taper bearings and driven by drive flanges which are splined to the one piece, stub shaft/constant velocity joint.

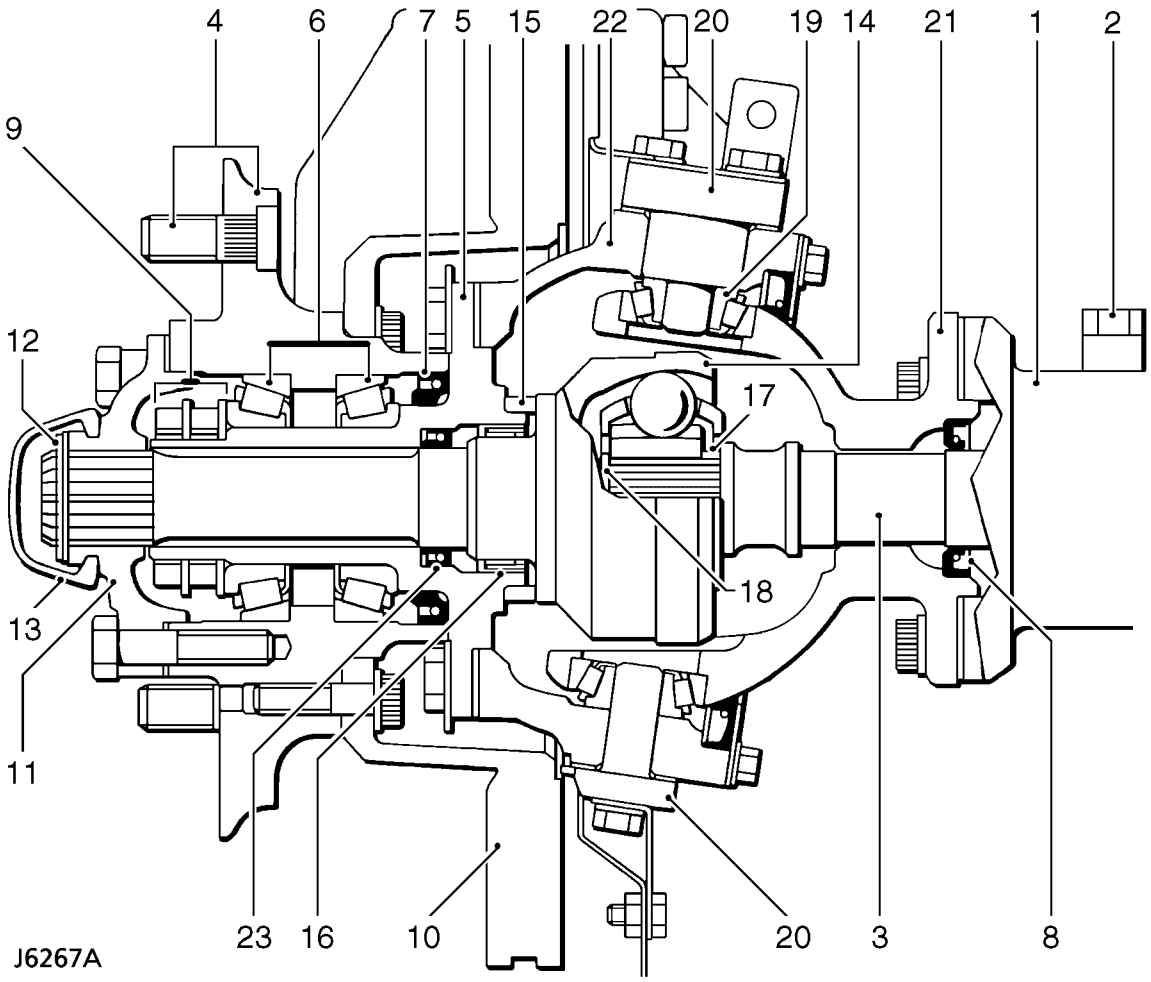

Front axle hub and swivel housing

1. Axle casing
2. Ventilation pipe
3. Axle shaft
4. Wheel studs and hub
5. Stub axle
6. Wheel bearings
7. Inner and outer hub seals
8. Axle shaft seal
9. Hub lock plate, thrust washer and nuts
10. Brake disc
11. Drive flange
12. Shim washer and circlip
13. Dust cap
14. Constant velocity joint/shaft
15. Thrust collar for CV joint
16. Roller bearing
17. Spacer
18. Circlip
19. Top and bottom swivel taper bearing
20. Top and bottom swivel pins
21. Spherical housing, seal and retainer
22. Swivel housing
23. Constant velocity shaft seal

Lubrication

The differential, swivel pin housing and wheel hubs are individually lubricated and separated by oil seals (7) and (8), see J6267A, to prevent oil transfer across the axle when the vehicle is traversing steep inclines. The wheel bearings are lubricated with grease and the swivel housing and differential with oil. On later vehicles, identified by having only a filler plug in the swivel housing, grease is used to lubricate the housing assembly,

Ventilation

Ventilation of the differential is through a plastic pipe (2) which terminates at a high level in the vehicle axle. The swivel housings ventilate through axle shaft oil seals (8) into the differential and the hub bearings vent via the oil seals into the swivel housing.

FAULT DIAGNOSIS

Complaint - Oil leaks

An external leak of lubrication can be caused by a faulty internal seal. For example, if the seals which separate the differential from the swivel housings are faulty and the vehicle is operating or parked on an embankment, oil may leak across the axle leaving one swivel with a high level and the opposite swivel and differential lacking lubrication.

See 'Description and Operation' for illustrations of oil seal locations.

When investigating leaks or checking oil levels, it is essential that all the lubrication is drained from any housing with a high level and that the other levels are checked.

Swivel oil should be checked for signs of grease leaking from the hub bearings and oil contamination of the hub grease.

Check that the axle ventilation system is clear, as a blockage can cause internal pressure to force oil past the seals.

If the vehicle is driven in deep water with defective oil seals, water may contaminate the lubricants and when checked, give a false impression that the housing has been over filled with oil.

Do not assume that a high oil level is due to over filling or, that a low level is because of an external leak.

FRONT AXLE ASSEMBLY

Service repair no - 54.10.01

Remove

WARNING: Remove and refit of axle requires a further two persons to steady axle when lowering or repositioning axle.

1. Support chassis front.
2. Remove road wheels.
3. Support axle weight with hydraulic jack.

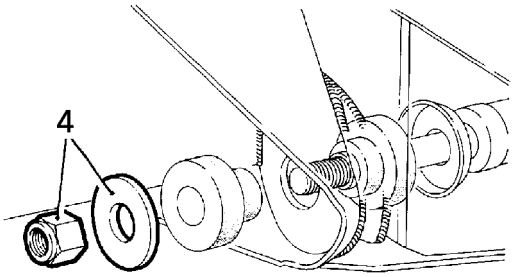

RR983

4. Remove radius arms to chassis frame nuts.
5. Disconnect steering damper from track rod. Using a extractor remove track rod links from swivel pin arms.
6. Remove four nuts and bolts securing radius arms to axle bracket.
7. Remove radius arms.
8. Remove bolts securing brake hose brackets . Refit bolts to prevent oil leakage.
9. Remove bolts from brake calipers and tie to one side.
10. Remove nuts and washers securing shock absorbers to axle.
11. Disconnect drag link from swivel pin housing arm.
12. Remove two nuts and bolts securing panhard rod to axle bracket. Lift rod clear of axle.
13. Mark for reassembly drive shaft flanges. Remove four nuts and bolts, tie propeller shaft to one side.

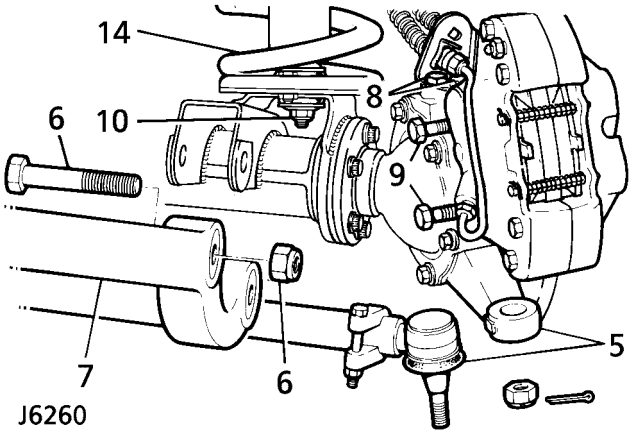

14. Release axle ventilation pipe banjo and lower axle assembly. Remove road springs.
15. Disconnect anti-roll bar link ***See FRONT SUSPENSION, Repair. Anti-roll bar ball*** .
16. Remove axle assembly.

Refit

17. Position axle under vehicle, supporting left side of axle, and fit anti-roll bar links ***See FRONT SUSPENSION, Repair. Anti-roll bar links*** .
18. Fit propeller shaft. Tighten bolts to ***47 Nm (35 lbf/ft).***
19. Fit panhard rod to axle bracket. Tighten bolts to ***88 Nm (65 lbf/ft).***
20. Fit drag link to swivel pin arm. Tighten fixings to ***40 Nm (30 lbf/ft).***
21. Fit shock absorbers to axle.
22. Fit brake calipers. Tighten bolts to ***82 Nm (60 lbf/ft).***
23. Tighten upper swivel pin bolts to ***78 Nm (58 lbf/ft).***
24. Fit radius arms to axle brackets. Tighten bolts to ***197 Nm (145 lbf/ft).***
25. Fit steering damper to track rod.
26. Fit radius arms to chassis side member. Tighten fixings to ***197 Nm (145 lbf/ft).***
27. Tighten track rod end to ***40 Nm (30 lbf/ft)*** and fit new split pin.
28. Remove chassis supports, fit road wheels and tighten to correct torque:
    Alloy wheels - ***130 Nm (96 lbf/ft)***
    Steel wheels - ***100 Nm (80 lbf/ft)***
    Heavy duty wheels - ***170 Nm (125 lbf/ft)***

FRONT DIFFERENTIAL

Service repair no - 54.10.07.

Overhaul

NOTE: The front axle differential, for all models, is the same as that fitted to the 90 rear axle and can only be serviced as a complete assembly ***See REAR AXLE AND FINAL DRIVE, Repair. Differential assembly - 90*** **.**

FRONT HUB

Service repair no - 60.25.14.

Overhaul

1. Remove hub assembly ***See FRONT SUSPENSION, Repair. Front hub bearings*** .
2. Remove outer bearing.
3. Mark, for reassembly, relationship between hub and brake disc, if original hub is to be refitted.
4. Remove 5 bolts and separate hub from brake disc.
5. Drift out grease seal and inner bearing from hub and discard seal.

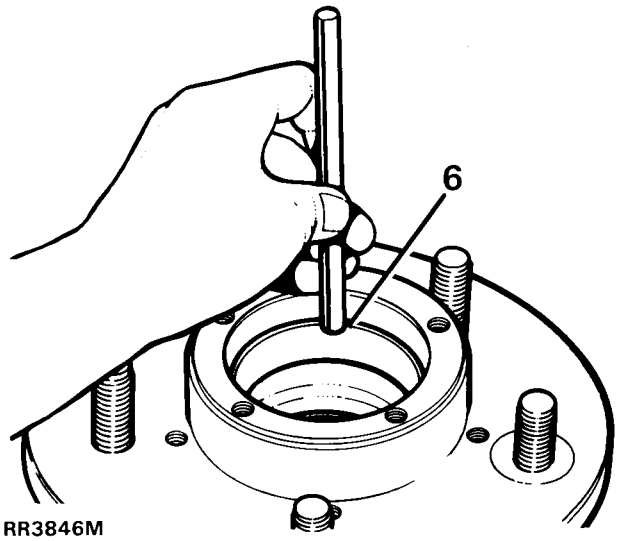

6. Drift out inner and outer bearing tracks.
7. Clean hub and drift in inner and outer bearing tracks.
8. Pack hub inner bearing with recommended grease and fit to hub.

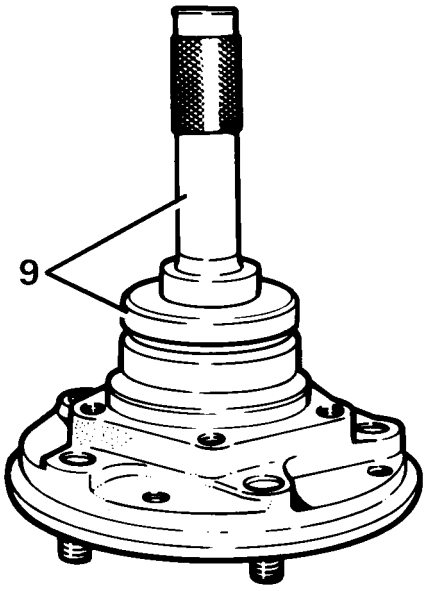

RR3845M

9. With lip side leading fit new seal to hub using special tool **LST 137** seal replacer and drift **18G 134**. Drive in seal flush with rear face of hub. Apply grease between seal lips.
10. Fit brake disc to hub, lining up to marks made during dismantling. Applying Loctite 270, fit retaining bolts. Tighten to ***73 Nm (54 lbf/ft).***
11. Grease and fit outer bearing to hub.
12. Fit hub assembly ***See FRONT SUSPENSION, Repair. Front hub bearings*** .

FRONT STUB AXLE, CONSTANT VELOCITY JOINT AND SWIVEL PIN HOUSING

Service repair no - 60.15.43.

Remove stub axle, axle shaft and constant velocity joint.

1. Remove front hub assembly ***See FRONT SUSPENSION, Repair. Front hub bearings*** .
2. Drain swivel pin housing and refit plug.

NOTE: On later vehicles the swivel pin housing is filled with grease for life, the level and drain plugs being deleted.

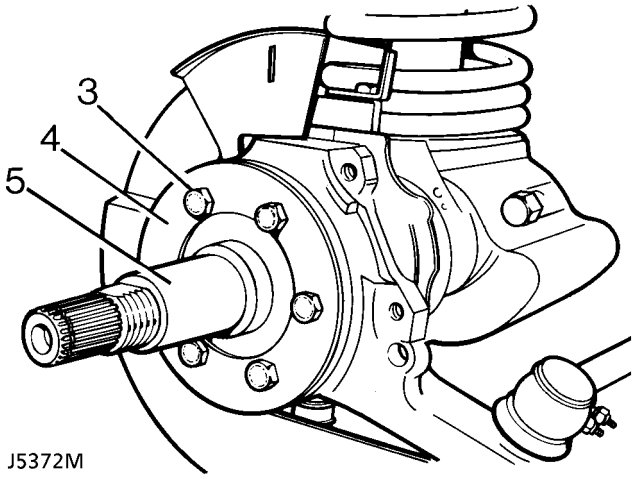

3. Remove 6 bolts retaining stub axle to swivel housing.
4. Remove mud shield.
5. Remove stub axle and joint washer.

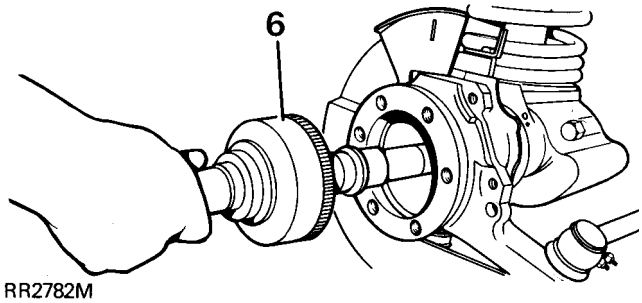

6. Wthdraw axle shaft and constant velocity joint from axle casing.

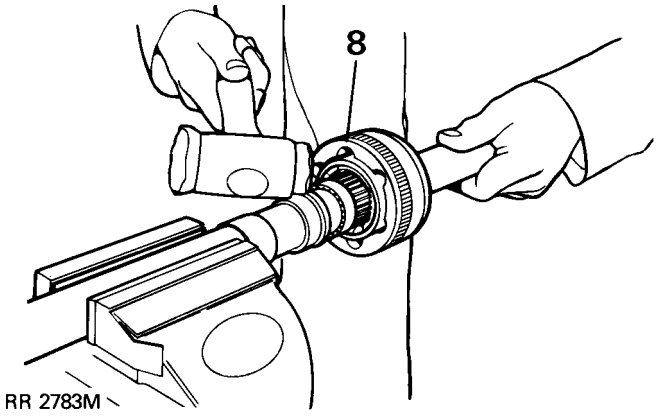

Remove constant velocity joint from axle shaft

7. Hold axle shaft firmly in a soft jawed vice.
8. Using a soft mallet drive constant velocity joint from shaft.
9. Remove circlip and collar from axle shaft.

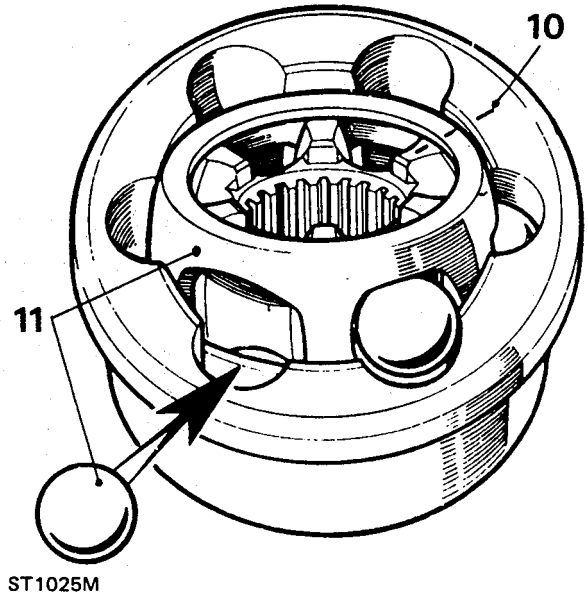

Constant velocity joint

10. Mark positions of constant velocity joint, inner and outer race and cage for reassembly.
11. Swivel cage and inner race to remove balls.

12. Examine all components, in particular, inner and outer track, cage balls and bearing surfaces for damage and excessive wear.
13. Maximum acceptable end-float on assembled joint 0,64mm. Renew if worn or damaged. Lubricate with a recommended oil during assembly.

Fit constant velocity joint to axle

14. Fit collar and a new circlip.
15. Engage constant velocity joint on axle shaft splines and using a soft mallet, drive joint in fully.

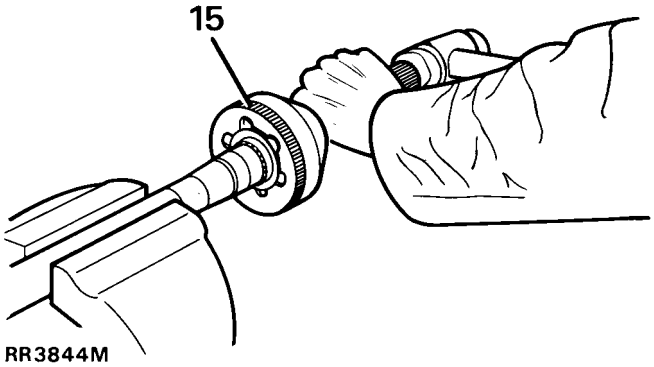

Renew stub axle, thrust ring, oil seal and bearing

16. Drill and chisel off thrust ring taking care to avoid damaging stub axle.

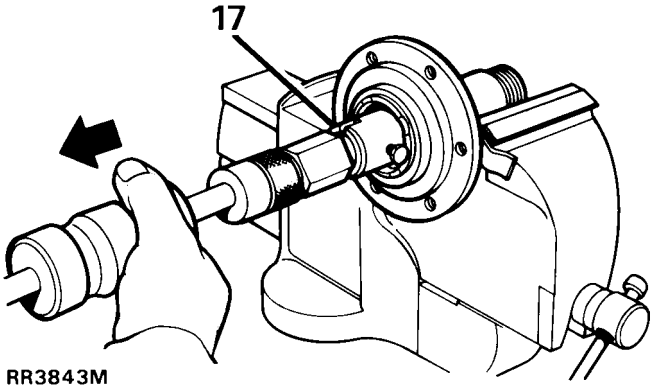

17. Remove bearing and oil seal using special tool **TRT-37-004** and slide hammer **LRT-99-004**. Ensure lip of tool locates behind bearing to to drive it out.
18. Repeat instruction for removal of oil seal.

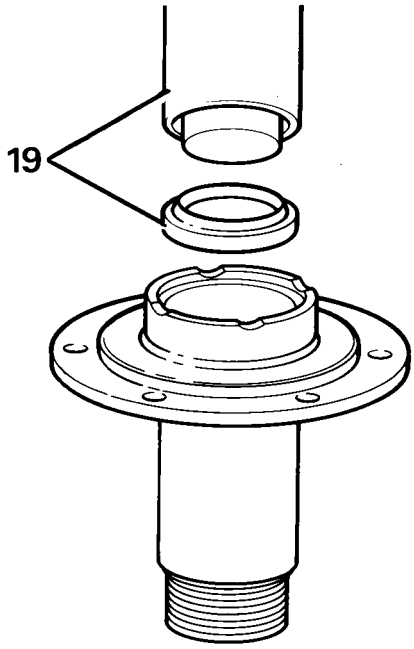

19. Lubricate seal and lip with EP90 oil and with cavity side leading press in a new oil seal using special tool **LRT-54-004**.

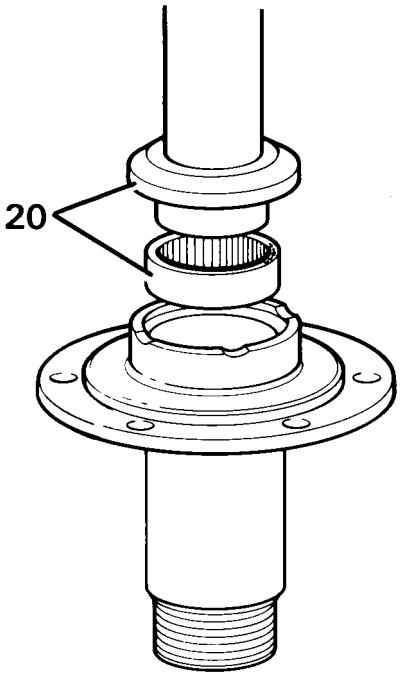

20. Using special tool **LRT-54-005**, fit bearing with its part number visible when fitted, and flush with end face of stub axle.
21. Press fit a new thrust ring onto stub axle.

Swivel pin housing

22. Remove bolts securing oil seal retaining plate and joint washer. Release assembly from swivel pin housing.

NOTE: Removal of oil seal and retaining plate is achieved when swivel bearing housing is removed.

23. Remove 2 bolts, retaining lower swivel pin to housing.
24. Remove brake disc shield bracket.
25. Tap lug to remove lower swivel pin and joint washer.
26. Remove two bolts retaining brake hose bracket and top swivel pin.
27. Remove bracket, top swivel pin and shims.
28. Remove swivel pin housing while retrieving lower and upper bearings.

Swivel bearing housing

29. Remove lower bearing track from swivel bearing housing.

NOTE: Use upper bearing opening to gain access to lower bearing track.

30. Remove 7 bolts retaining swivel bearing housing to axle case.
31. Remove inner oil seal from back of housing.
32. Remove top bearing track from swivel bearing housing.

NOTE: Use lower bearing opening to gain access to upper bearing track.

33. If worn, pitted or damaged, renew housing.
34. Fit upper and lower bearing tracks into swivel bearing housing.

CAUTION: Ensure bearing tracks are fitted square or damage could occur.

35. With seal lips trailing, fit swivel housing inner oil seal into rear of housing. Grease seal lips.

Fit swivel pin housing

36. Coat swivel bearing housing to axle casing bolts with Loctite 270 or equivalent.
37. Coat both sides of joint washer with a sealing compound. Position swivel bearing housing to axle mating face.

Swivel assembly components

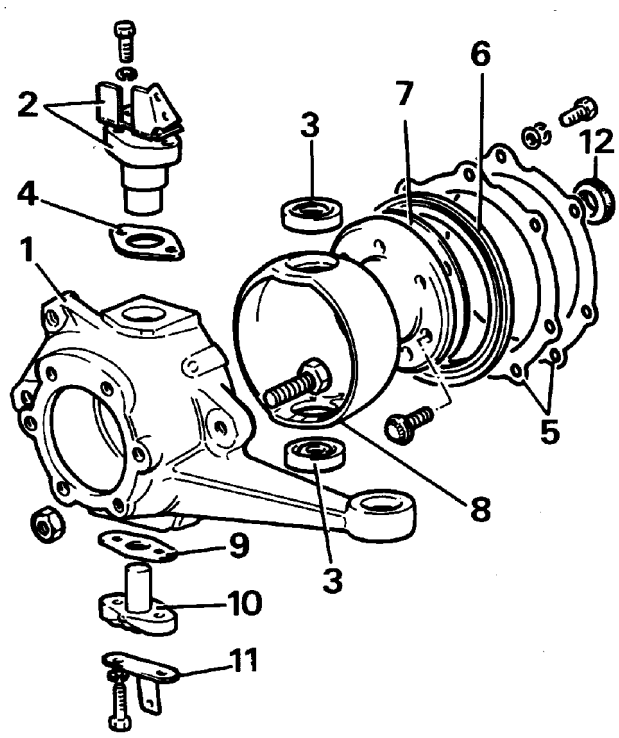

RR980M

1. Swivel pin housing
2. Top swivel pin and brake hose bracket
3. Upper and lower swivel pin bearings
4. Shim
5. Retaining plate and washer
6. Oil seal
7. Joint washer
8. Swivel bearing housing
9. Joint washer
10. Lower swivel pin
11. Mudshield bracket
12. Swivel housing inner oil seal

38. Place retaining plate, joint washer and oil seal over axle flange ready for assembly.
39. Fit swivel bearing housing to axle flange with 7 bolts. Tighten to ***73 Nm (54 lbf/ft).***
40. Grease and fit upper and lower swivel pin taper roller bearings.
41. Position swivel pin housing over swivel bearing housing.
42. Coat joint washer both sides with sealing compound and position on lower swivel pin.
43. Loosely fit brake shield bracket plus lower swivel pin with lug outboard to swivel pin housing.
44. Loosely fit top swivel pin plus existing shims and brake hose bracket to swivel pin housing.
45. Apply Loctite 270 or equivalent to lower swivel pin bolts. ***25 Nm (18 lbf/ft),*** bend over lock tabs.
46. Tighten top swivel pin bolts to ***65 Nm (48 lbf/ft).***

Check and adjust preload on bearings

NOTE: Swivel housing oil seal and axle should not be fitted.

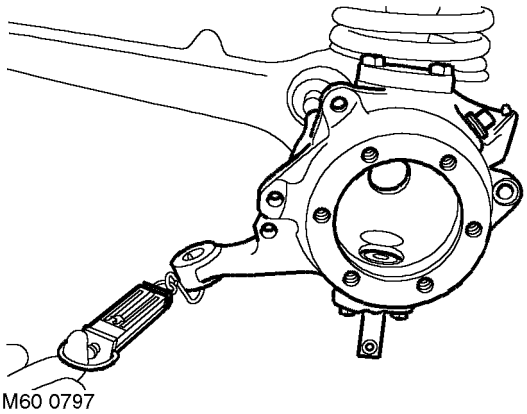

47. Attach a spring balance to track rod ball joint bore and pull balance to determine effort required to turn swivel pin housing. Resistance, once initial inertia has been overcome, should be **1.16 to 1.46 kg.** Adjust by removing or adding shims to top swivel pin.
48. When setting is correct remove top swivel bolts, apply Loctite 270 or equivalent. Refit bolts and tighten to ***65 Nm (48 lbf/ft),*** and bend over lock tabs.
49. Apply recommended grease between lips of swivel oil seal.
50. Fit oil seal, joint washer and retaining plate with 7 bolts and spring washers. Tighten to ***11 Nm (8 lbf/ft).***
51. Fit tie rod and drag link and secure with new cotter pins. Tighten fixing to ***40 Nm (30 lbf/ft).***
52. Fit brake disc shield.
53. Loosely fit lock stop bolt and nut.
54. Apply a recommended grease between lips of swivel housing oil seal.
55. Secure oil seal with retaining plate and securing bolts. Tighten to ***11 Nm (8 lbf/ft).***
56. Fit track-rod and drag link and secure with new cotter pins.
57. Loosely fit lock stop bolt for later adjustment.
58. Fit brake disc shield.

Fit driveshaft and stub axle

59. Insert axle shaft, and when differential splines are engaged, push assembly in fully.

CAUTION: Take care not to damage axle shaft oil seals.

60. Place a new joint washer in position on swivelpin housing to stub axle mating face. Coat threads of stub axle bolts with Loctite 270.
61. Fit stub axle with flat at 12 O'clock position.

CAUTION: Ensure that constant velocity joint bearing journal is butted against thrust ring on stub axle before stub axle is secured.

62. Place mud shield in position and secure stub axle to swivel pin housing with 6 bolts and tighten evenly to ***65 Nm (48 lbf/ft).***
63. Fit brake jump hoses to brake jump hose bracket.
64. Fit complete front hub assembly ***See FRONT SUSPENSION, Repair. Front hub bearings*** .
65. Check swivel pin housing oil drain plug is fitted.
66. Fill swivel assembly to correct level, with new oil ***See MAINTENANCE , Under vehicle maintenance*** .

NOTE: On later vehicles fill swivel pin housing with 0.33 Litres of Molytex EP 00 grease.

67. Set steering lock stop bolts ***See STEERING, Adjustment. Steering lock stops*** .

57 - STEERING

CONTENTS

Page

REPAIR

STEERING COLUMN - UPPER - Td5 1

STEERING COLUMN - UPPER - Td5

Service repair no - 57.40.01

Remove

1. Ensure road wheels and steering wheel are set in the straight ahead position.

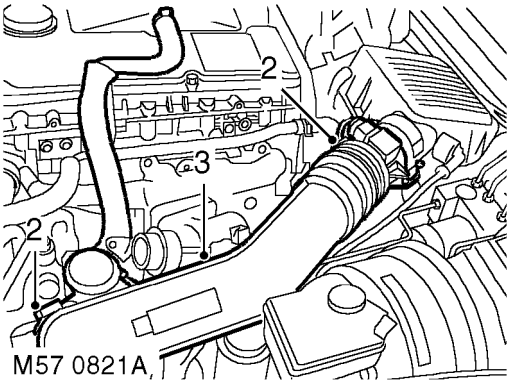

2. Loosen 2 clips securing air inlet pipe between turbo and inlet air filter.
3. Remove air inlet pipe.

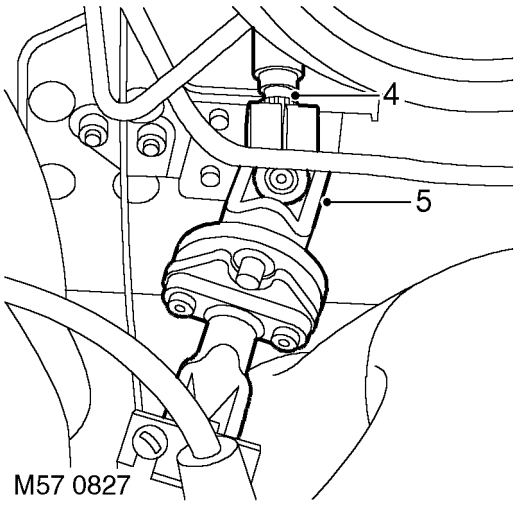

4. Mark relationship between the upper steering column and the lower steering column universal joint.
5. Remove bolt securing upper column to lower column universal joint.
6. Remove steering colum nacelle. ***See this Section.***
7. Remove instrument pack. ***See INSTRUMENTS, Repair.***

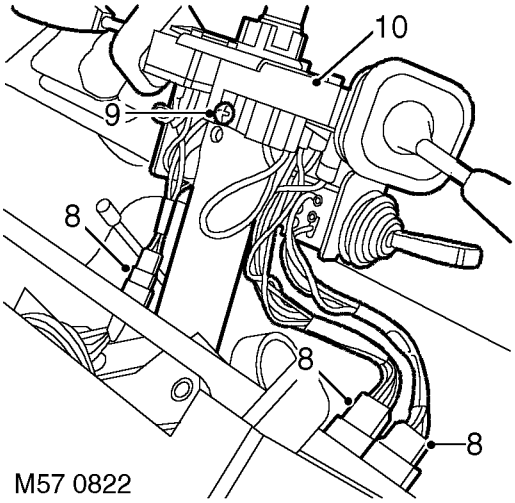

8. Disconnect 3 column switch multiplugs.
9. Loosen column switch clamping screw.
10. Remove column switch assembly from steering column.
11. Disconnect 4 Lucars from rear of ignition switch.

NOTE: Take note of Lucars correct fitted position. Details can also be found in the Electrical Reference Library.

12. Remove passive coil. ***See ELECTRICAL, Repair.***

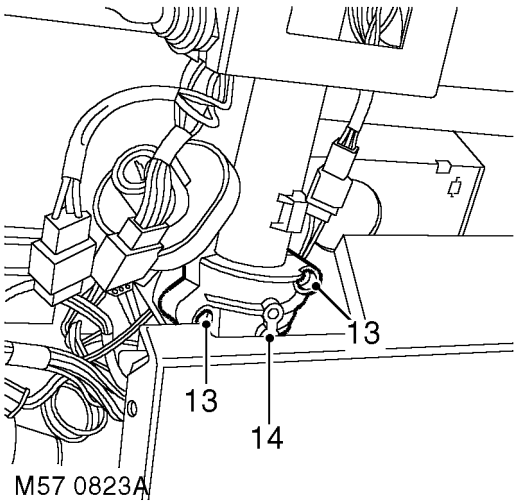

13. Drill out 2 shear bolts securing ignition barrel to column.
14. Remove ignition barrel.

15. Remove brake servo. ***See BRAKES, Repair.***
16. Release ABS modulator multiplug from side of brake pedal box.
17. Release mat from underside of fascia to gain access to brake pedal box mounting bolts.

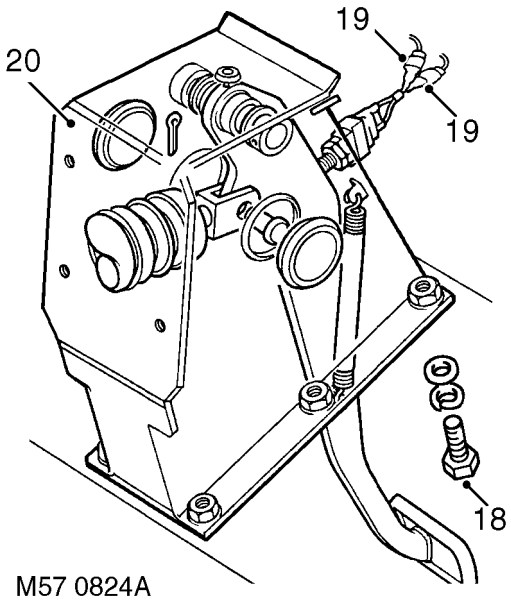

M57 0824A

18. Remove 6 bolts securing brake pedal box to bulkhead.
19. Disconnect 2 brake pedal switch Lucars.
20. Carefully remove brake pedal box assembly and collect gasket.

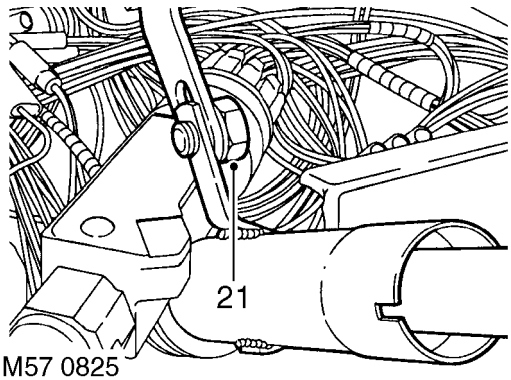

M57 0825

21. Remove bolt securing column upper tie bar to column.

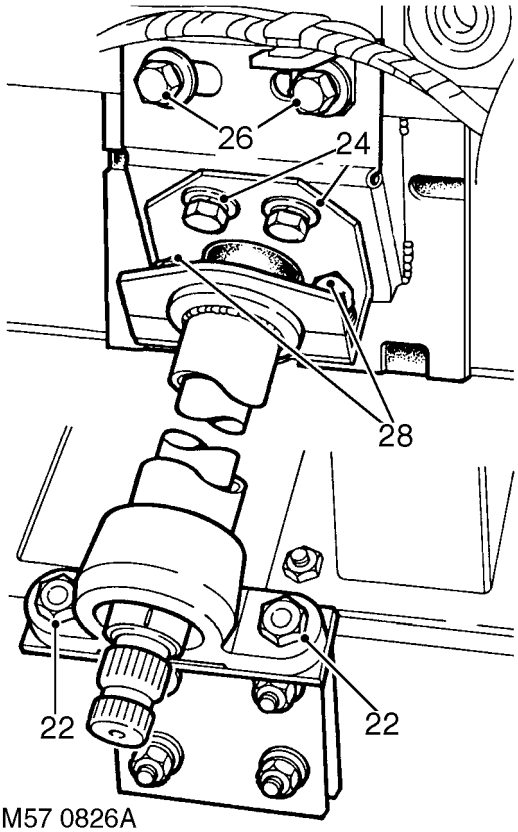

M57 0826A

22. Remove 2 bolts securing upper column to lower mounting bracket.
23. Remove 2 bolts securing 2 halves of column upper clamp.
24. Remove 2 bolts securing column upper clamp to mounting bracket.
25. Remove column upper clamp and collect rubber packing.
26. Remove 2 bolts securing column upper mounting bracket to bulkhead.
27. Release upper column from lower column and manouvre mounting bracket and upper column assembly from vehicle.
28. Remove mounting bracket from column.

Refit

NOTE: The steering column is a non-servicable component and can only be serviced as a complete assembly.

29. Fit mounting bracket to column and manouvre assembly into position.

NOTE: Ensure marks on upper and lower columns are aligned.

30. Loosely fit bolts securing mounting bracket to bulkhead.
31. Fit upper clamp and rubber packing to column.
32. Loosely fit bolts securing upper clamp to mounting bracket.
33. Loosely fit bolts securing 2 halves of upper clamp.
34. Loosely fit bolts securing column lower mounting bracket.
35. Fit bolt securing upper tie bar to steering column and tighten to ***22 Nm (16 lbf.ft)*** .
36. Tighten mounting bracket to bulkhead bolts, clamp bolts, and lower mounting bolts.
M6 bolts = ***9 Nm (6 lbf.ft)***
M8 bolts = ***22 Nm (16 lbf.ft)***
37. Manouvre brake pedal box assembly and NEW gasket into position in vehicle.
38. Tighten bolts securing brake pedal box to bulkhead to ***25 Nm (18 lbf.ft)***
39. Connect brake pedal switch Lucars.
40. Reposition mat to underside of fascia.
41. Secure ABS modulator multiplug to side of brake pedal box.
42. Fit brake servo. ***See BRAKES, Repair.***
43. Fit ignition switch to steering column, ensuring inner shaft slot aligns with steering lock plunger.
44. Evenly tighten clamp bolts, but DO NOT shear at this stage.
45. Temporarily fit steering wheel and check for correct operation of switch and lock.
46. Remove steering wheel.
47. Fully tighten ignition switch bolts until heads shear.
48. Connect Lucars to rear of ignition switch.
49. Fit passive coil to ignition switch and connect multiplug.
50. Fit switch assembly to steering column and tighten clamping screw.
51. Connect column switch multiplugs.
52. Fit instrument pack. ***See INSTRUMENTS, Repair.***
53. Fit steering column nacelle. ***See this Section.***
54. Fit bolt securing upper column to lower column universal joint and tighten to ***25 Nm (18 lbf.ft)*** .
55. Fit air inlet pipe between turbo and inlet air filter and secure with clips.

60 - FRONT SUSPENSION

CONTENTS

Page

DESCRIPTION AND OPERATION

FRONT SUSPENSION - FROM 02MY 1

REPAIR

PANHARD ROD - FROM 02MY 1
BEARINGS - FRONT HUB 1

FRONT SUSPENSION - FROM 02MY

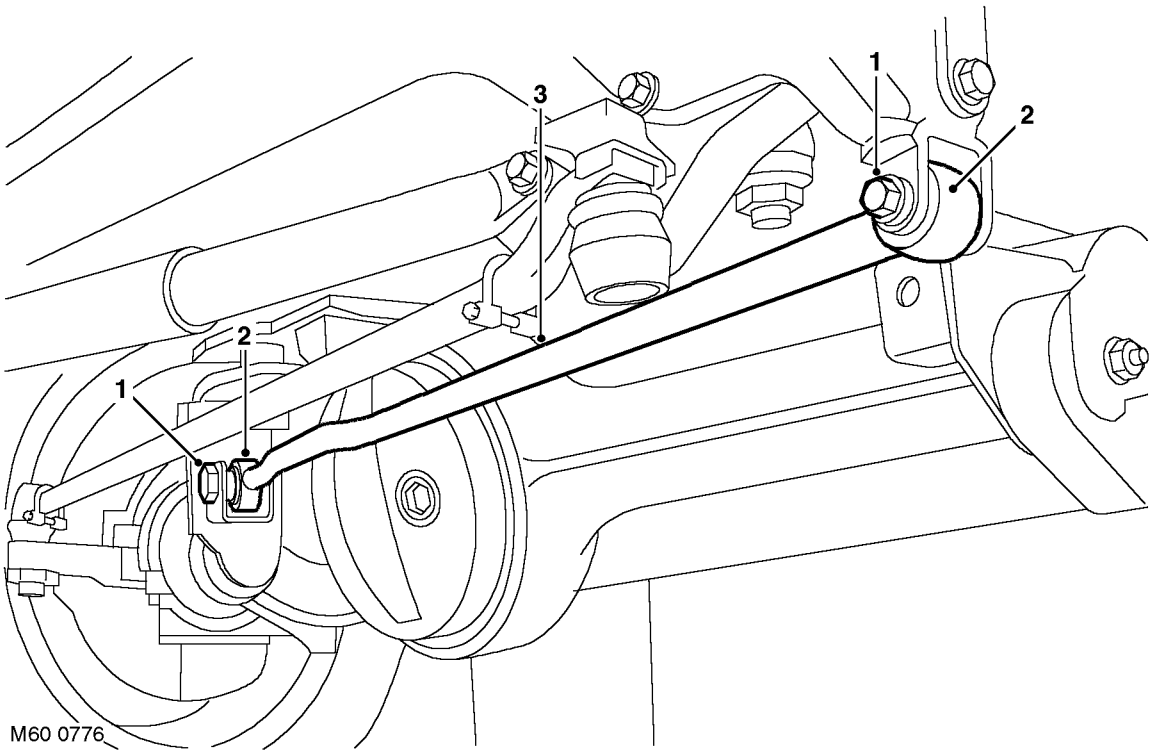

1. Bolts
2. Bushes
3. Panhard rod

Changes have been incorporated to improve the durability of the suspension. The current Panhard rods are forged. New Panhard rods are introduced which are fabricated from tubular steel and are handed.

The rods are fitted with larger bushes which use M16 bolts in place of the M14 bolts. The torque for the new bolts is raised to 230 Nm (170 lbf.ft).

The Panhard rod support brackets are now fabricated from upgraded steel which allows the higher torque figure to be applied to the fixing bolts.

PANHARD ROD - FROM 02MY

Service repair no - 60.10.07.

Remove

1. Remove fixings at mounting arm.
2. Remove fixings at axle bracket.
3. Remove panhard rod.
4. Using a suitable length of steel tubing, press out flexible bushes. Ensure tubing locates on outer edge of bush and not on rubber inner.

Refit

5. Fit replacement bushes.

CAUTION: Apply pressure to outer edge of bush, and not rubber inner.

6. Fit panhard rod to axle bracket and mounting arm. Tighten fixings to ***230 Nm (170 lbf/ft).***

BEARINGS - FRONT HUB

Service repair no - 60.25.14

Remove

1. Raise front of vehicle.

WARNING: Support on safety stands.

2. Remove front road wheel.
3. Pull back front brake caliper jump hose shield and clamp brake hose.
4. Position container collect brake fluid.
5. Loosen brake pipe to jump hose union and disconnect.

CAUTION: Use 2 spanners when loosening or tightening unions.

6. Remove 2 bolts securing brake caliper to hub.
7. Remove brake caliper.

CAUTION: Plug the connections.

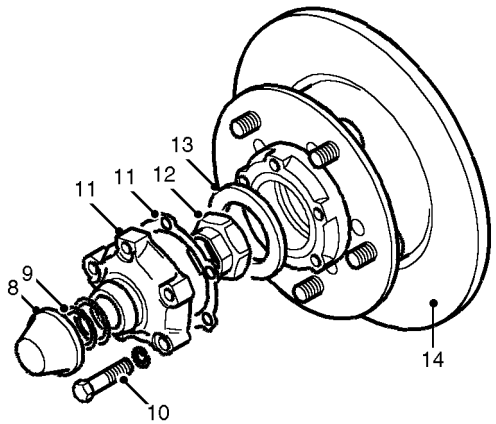

M60 0644A

8. Remove dust cap.
9. Remove circlip and shim(s) from drive shaft.
10. Remove and discard 5 bolts securing driving member to hub.
11. Remove driving member and discard gasket.

12. Knock back staking and using a suitable socket, remove and discard hub nut.
13. Remove washer from hub.
14. Remove hub and brake disc assembly complete with bearings.

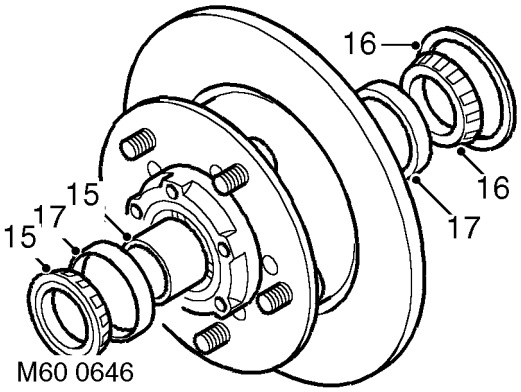

15. Remove outer bearing and spacer from hub.
16. Remove grease seal and inner bearing from hub.
17. Remove inner and outer bearing tracks from hub.

Refit

18. Clean hub and bearing locations.
19. Fit inner and outer bearing tracks to hub.
20. Pack inner bearing with grease and fit to hub.
21. Fit new seal flush with rear face of hub using **LRT-54-003** and **LRT-99-003.**
22. Clean stub axle.
23. Pack outer bearing with grease, fit spacer and bearing to hub.
24. Position **LRT-54-019** over hub nut threads on axle casing.
25. Fit hub assembly to stub axle, remove **LRT-54-019**.
26. Fit washer and new hub nut and tighten to ***30 Nm (22 lbf.ft).***
27. Rotate and push/pull hub to setle bearings. Tighten hub nut to ***210 Nm (150 lbf.ft).***
28. To check drive shaft end float, mount a dial gauge using bracket **LRT-99-503** to driving member bolt hole.
29. Ensure dial gauge is contacting hub nut face.
30. Move drive shaft in and out noting dial gauge reading.
31. If end float is present refer to table for correct spacer and change spacer as necessary.
32. When no end float is evident, remove the dial gauge and mounting bracket.
33. Stake the hub nut.
34. Clean hub and axle shaft faces.
35. Fit new driving member gasket.
36. Position driving member to hub and tighten new bolts to ***65 Nm (48 lbf.ft).***
37. Fit original shim(s) to drive shaft and secure with circlip.
38. Position brake caliper to hub, align fixings, fit bolts and tighten to ***82 Nm (60 lbf.ft).***
39. Remove plugs from brake pipe connections.
40. Connect brake pipe union to jump hose and tighten union.

CAUTION: Use 2 spanners when tightening or loosening unions.

41. Remove brake hose clamp from jump hose.
42. Bleed brake system. ***See BRAKES, Adjustment.***
43. Fit road wheel, remove axle stand and tighten wheel nuts to ***130 Nm (95 lbf.ft).***
44. Operate foot brake to locate brake pads before taking vehicle on road.

End Float (mm)	Spacer size (mm)	Colour code
0.00	15.5	Purple
0.025	15.4	Yellow
0.050	15.4	Yellow
0.075	15.4	Yellow
0.10	15.3	Red
0.125	15.3	Red
0.150	15.3	Red
0.175	15.2	Blue
0.200	15.2	Blue
0.225	15.2	Blue
0.250	15.2	Blue
0.275	15.1	Green
0.300	15.1	Green
0.325	15.1	Green
0.350	15.1	Green
0.375	15.0	Black
0.400	15.0	Black
0.425	15.0	Black
0.450	15.0	Black
0.475	14.9	White
0.500	14.9	White
0.525	14.9	White
0.550	14.9	White

64 - REAR SUSPENSION

CONTENTS

Page

REPAIR

BEARING - REAR HUB 1

BEARING - REAR HUB

Service repair no - 64.15.14

Remove

1. Raise rear of vehicle.

WARNING: Support on safety stands.

2. Remove rear road wheel.
3. Remove 2 bolts securing brake caliper to hub.
4. Release caliper from disc and tie aside.

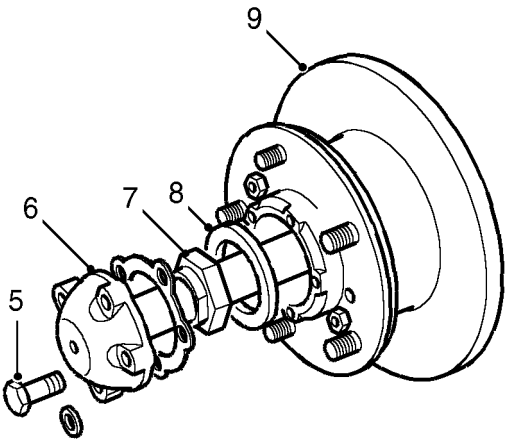

M64 0067

5. Remove 5 bolts securing axle shaft.
6. Remove axle shaft and discard gasket.
7. Knock back staking, and using a suitable socket, remove and discard stake nut.
8. Remove hub nut washer.
9. Remove hub and brake disc assembly complete with bearings.

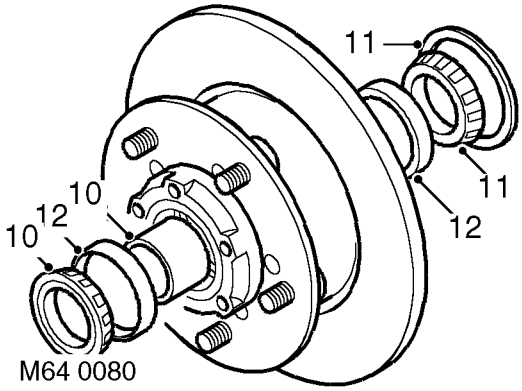

M64 0080

10. Remove outer bearing and spacer from hub.
11. Remove grease seal and inner bearing from hub.
12. Remove inner and outer bearing tracks from hub.

Refit

13. Clean hub and bearing locations.
14. Fit inner and outer bearing tracks to hub.
15. Pack inner bearing with grease and fit to hub.
16. Fit new grease seal flush with rear face of hub using **LRT-54-003** and **LRT-99-003.**
17. Clean stub axle.
18. Pack outer bearing with grease, fit spacer and bearing to hub.
19. Fit hub assembly to stub axle, remove **LRT-54-019**.
20. Fit washer and new hub nut and tighten to ***30 Nm (22 lbf.ft).***
21. Rotate and push/pull hub to settle bearings. Tighten hub nut to ***210 Nm (150 lbf.ft).***
22. To check drive shaft end float, mount a dial gauge using bracket **LRT-99-503** to driving member bolt hole.
23. Ensure dial gauge is contacting hub nut face.
24. Move drive shaft in and out noting dial gauge reading.

25. If end float is present refer to table for correct spacer and change spacer as necessary.
26. When no end float is evident, remove the dial gauge and mounting bracket.
27. Stake the hub nut.
28. Clean hub and axle shaft faces.
29. Fit new driving member gasket.
30. Position driving member to hub and tighten new bolts to ***65 Nm (48 lbf.ft).***
31. Fit original shim(s) to drive shaft and secure with circlip.
32. Position caliper to hub, fit bolts and tighten to ***82 Nm (61 lbf.ft).***
33. Fit road wheel, remove axle stands and tighten road wheel nuts to ***130 Nm (96 lbf.ft).***
34. Operate brake pedal to locate brake pads before driving vehicle.
35. Check and top up brake fluid.

End Float (mm)	Spacer size (mm)	Colour code
0.00	15.5	Purple
0.025	15.4	Yellow
0.050	15.4	Yellow
0.075	15.4	Yellow
0.10	15.3	Red
0.125	15.3	Red
0.150	15.3	Red
0.175	15.2	Blue
0.200	15.2	Blue
0.225	15.2	Blue
0.250	15.2	Blue
0.275	15.1	Green
0.300	15.1	Green
0.325	15.1	Green
0.350	15.1	Green
0.375	15.0	Black
0.400	15.0	Black
0.425	15.0	Black
0.450	15.0	Black
0.475	14.9	White
0.500	14.9	White
0.525	14.9	White
0.550	14.9	White

70 - BRAKES

CONTENTS

Page

DESCRIPTION AND OPERATION

REAR BRAKE CALIPERS - FROM 02MY 2

ADJUSTMENT

BRAKE SYSTEM BLEED 1
PARK BRAKE - ADJUST 2

REPAIR

ECU - ABS 1
SENSOR - ABS - FRONT WHEEL 2
SENSORS - ABS - REAR WHEELS 3
MASTER CYLINDER 4
SERVO ASSEMBLY 5
MODULATOR UNIT - ABS 6
BRAKE CALIPER - FRONT 7
BRAKE CALIPER - REAR 8
SWITCH - STOP LIGHT 9
FRONT BRAKE PADS - FROM 02MY 10
REAR BRAKE PADS - FROM 02MY 11

This page is intentionally left blank

REAR BRAKE CALIPERS - FROM 02MY

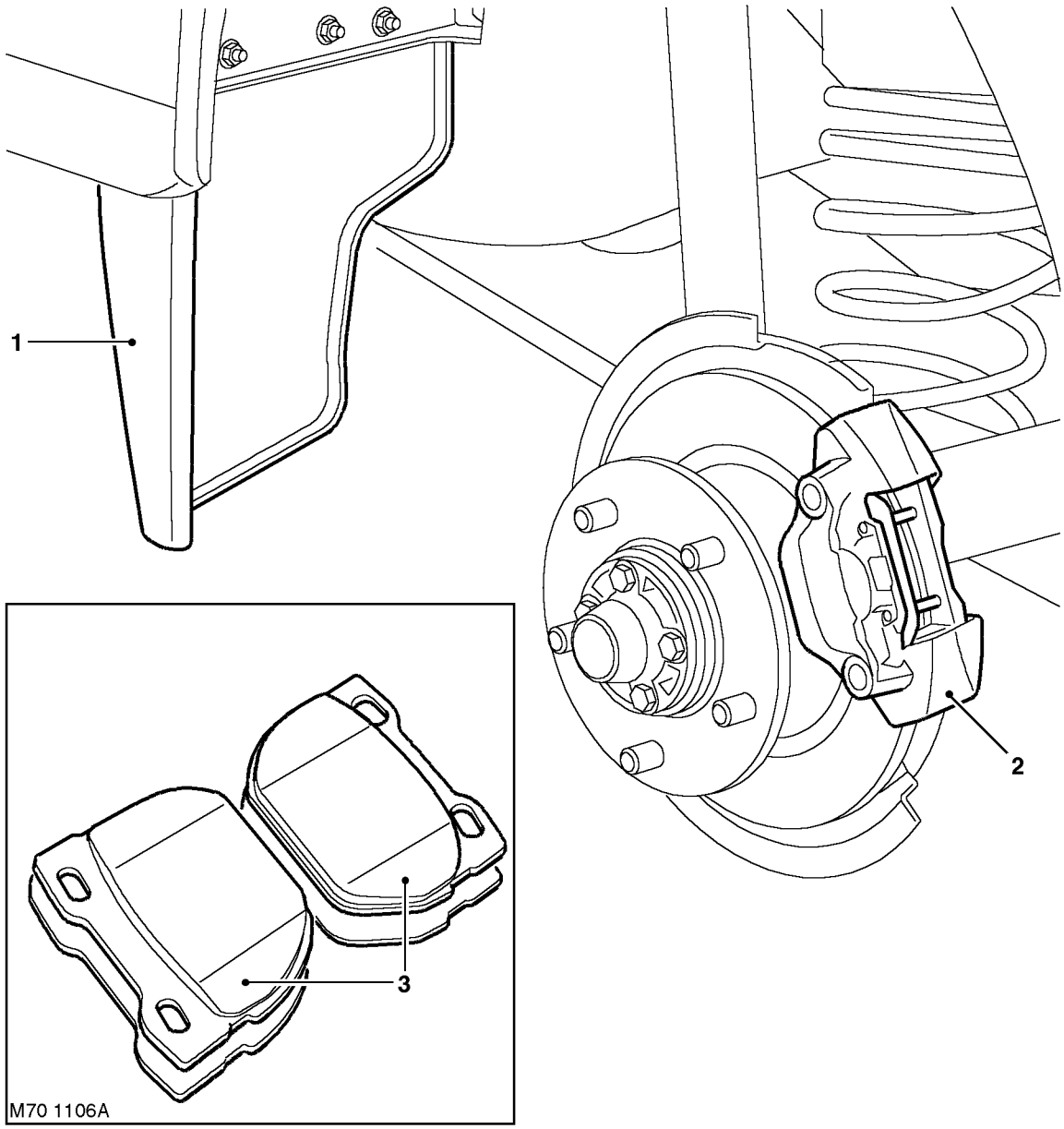

1. Deflector
2. Rear brake caliper
3. Rear brake pads

Modifications to the rear brakes have been introduced on 110 and 130 models. This is to increase the service life of the rear brake pads in harsh environments.

New rear brake calipers are introduced which allow the fitment of brake pads with a thicker friction material. The brake pads have increased leading and trailing edge chamfers which improve efficiency.

Aerodynamic deflectors are located forward of the rear wheels to protect the rear calipers from the ingress of dirt, which can cause excessive pad wear. The deflectors are manufactured from moulded rubber and are flexible to prevent damage from impact. These deflectors are fitted to 90, 110 and 130 models in markets where environmental conditions cause excessive brake pad wear.

BRAKE SYSTEM BLEED

Service repair no - 70.25.02

Preparation

WARNING: Before bleeding the brake system refer to general brake service practice. ***See this Section. general brake service practice***

- **During bleed procedure, brake fluid level must not be allowed to fall below the MIN mark. Keep reservoir topped up to the MAX mark.**
- **To bleed the hydraulic circuits, four bleed nipples are provided, one at each caliper.**

There are two methods by which air can be removed from the braking system:-

1. MANUAL BLEED PROCEDURE
2. PRESSURE BLEED PROCEDURE

Pressure bleed procedure

Purpose designed equipment for pressure filling and bleeding of hydraulic systems may be used on Land Rover vehicles. The equipment manufacturers instructions must be followed and the pressure must not exceed 4.5 bar, 65 lb/in.

Manual bleed procedure

Equipment required
- Clean glass receptacle
- Bleed hose
- Wrench
- Approx. 2 litres (3 pts) brake fluid

Master cylinder bleed

1. Disconnect battery negative lead.
2. Depress brake pedal fully and slowly 5 times.
3. Release pedal and wait 10 seconds.
4. Repeat until firm resistance is felt at the pedal.

Complete circuit bleed

1. Disconnect battery negative lead.
2. Fit bleed hose to caliper bleed screw.
3. Dip free end of bleed hose into brake fluid in bleed bottle.
4. Open bleed nipple.
5. Depress brake pedal fully several times until fluid is clear of air bubbles.
6. Keeping pedal fully depresses, tighten bleed nipple then release pedal.
7. Repeat procedure for remaining calipers.
8. Fit bleed screw protection caps.
9. Check/top-up fluid level when bleeding is complete.

PARK BRAKE - ADJUST

Service repair no - 70.45.09

Check

NOTE: The park brake should be fully operational on third notch of ratchet.

1. Raise one rear wheel clear of ground and support on axle stand.
2. Release park brake lever.

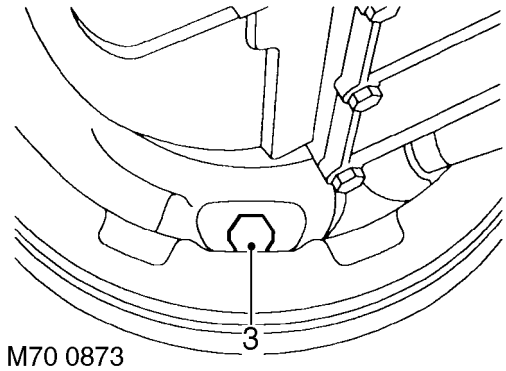

3. Tighten brake adjuster to ***25 Nm (18 lbf.ft)*** to fully expand shoes to drum.
4. Back off adjuster $1^1/_2$ turns, check that drum is free to rotate.
5. Check operation of park brake lever to give pawl 2 notches free movement on ratchet before being fully operational on third notch of ratchet. Adjust park brake accordingly if lever travel exceeds the above tolerance.

CAUTION: Cable adjustment must ONLY be used for initial setting and to compensate for cable stretch. It MUST NOT be used to take up brake shoe wear, which MUST be adjusted at brake drum.

6. Remove axle stand and wheel chock.

ECU - ABS

Service repair no - 70.65.01

Remove

1. Disconnect battery negative lead.
2. Release and remove passenger seat base.

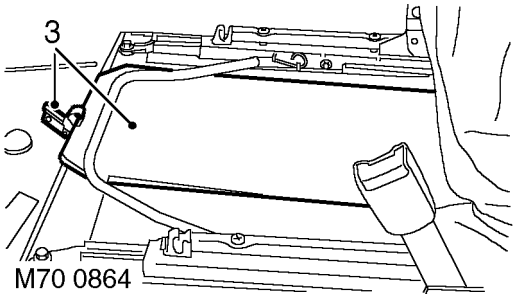

3. Release clip securing ECU cover plate.
4. Remove ECU cover plate.

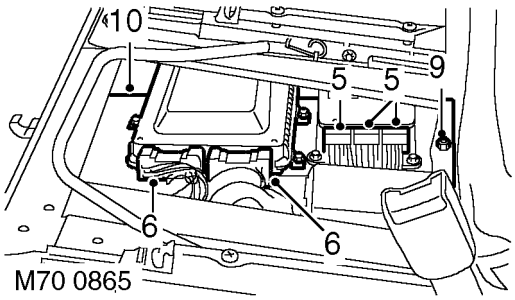

5. Disconnect 3 multiplugs from ABS ECU.
6. Disconnect 2 multiplugs from engine management ECU.
7. Release seat base carpet to gain access to ECU mounting plate Torx screws.
8. Remove 2 Torx screws securing front edge of ECU mounting plate.
9. Remove nut securing rear edge of ECU mounting plate.
10. Remove mounting plate and ECU assembly from seat base.

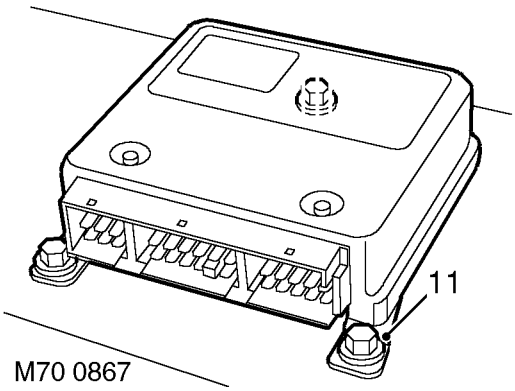

11. Remove 3 bolts securing ABS ECU to mounting plate.
12. Remove ABS ECU.

Refit

13. Position ABS ECU to mounting plate and secure with bolts.
14. Fit mounting plate and ECU assembly to seat base.
15. Fit Torx screws and nut securing mounting plate to seat base.
16. Re-position carpet.
17. Connect multiplugs to ABS and engine management ECU's.
18. Fit ECU cover plate to seat base and secure in position with clip.
19. Fit passenger seat base.
20. Reconnect battery negative lead.

SENSOR - ABS - FRONT WHEEL

Service repair no - 70.65.30

Remove

1. Raise vehicle on a 2 post ramp.

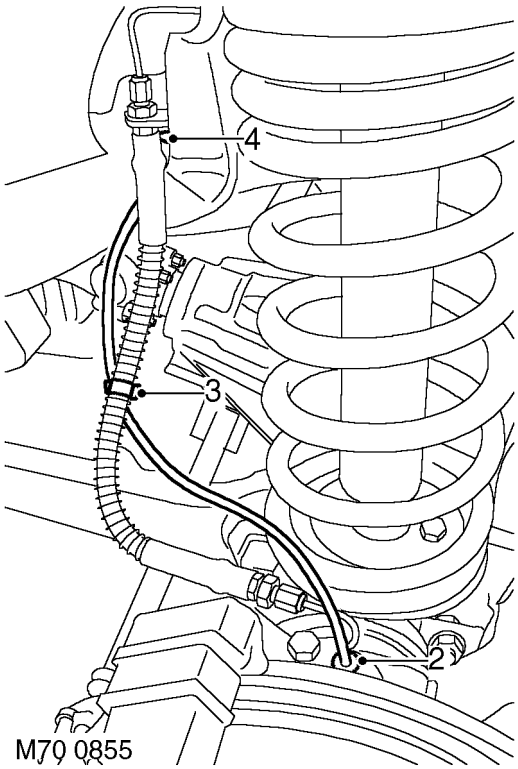

2. Carefully prize ABS sensor from front hub.
3. Release clip securing ABS sensor harness to brake pipe.
4. Release clip securing ABS sensor harness to inner wing.
5. Lower vehicle.
6. Release second clip securing ABS harness to inner wing.

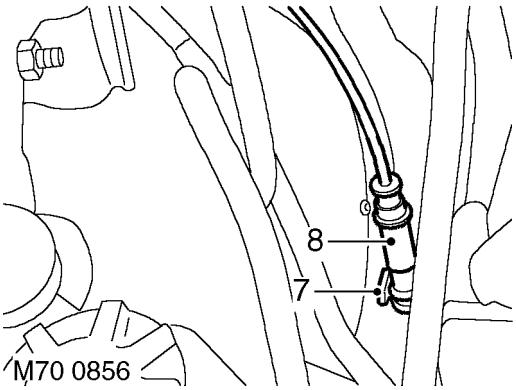

7. Disconnect sensor harness multiplug.
8. Remove sensor and harness.

Refit

9. Connect sensor harness multiplug.
10. Position sensor harness and secure to inner wing with clip.
11. Raise vehicle.
12. Secure harness to inner wing and brake pipe with clips.
13. Apply grease to sensor.
14. Carefully fit sensor to hub assembly.
15. Lower vehicle.

SENSORS - ABS - REAR WHEELS

Service repair no - 70.65.31

Remove

1. Raise vehicle on a 2 post ramp.
2. Remove both rear wheels.

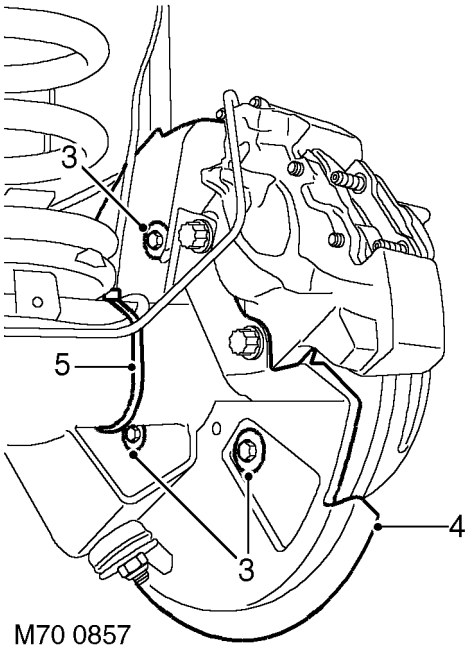

M70 0857

3. Remove 3 bolts securing each brake disc backplate to hub assemblies.
4. Remove both back plates.
5. Remove 2 cable ties securing sensor harness to outer ends of axle.

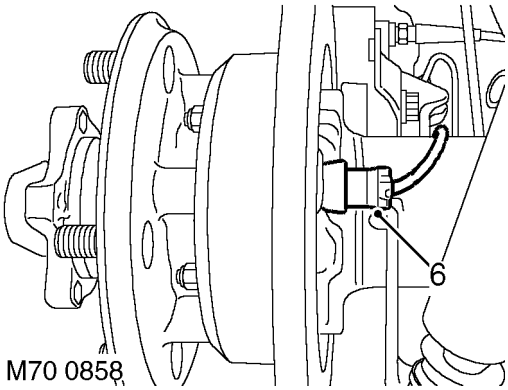

M70 0858

6. Carefully prise both sensors from hub assemblies.

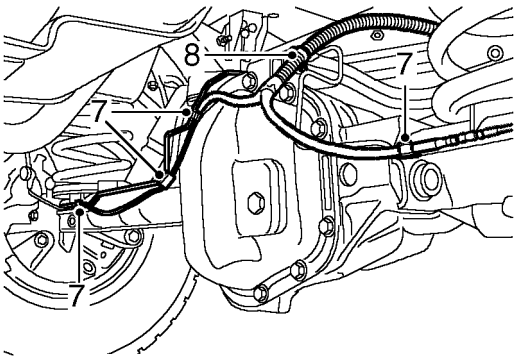

M70 0859

7. Release 4 clips securing sensor harness to axle.
8. Release cable tie securing harness to differential.

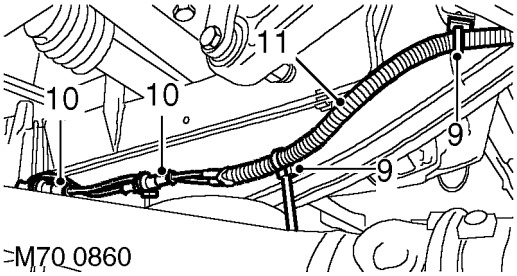

M70 0860

9. Release 3 cable ties securing harness to chassis longitudinal.
10. Disconnect sensor multiplug.
11. Remove harness and sensor assembly.

Refit

12. Position harness and sensor assembly to vehicle and connect multiplug.
13. Apply grease to both sensors.
14. Carefully fit both sensors to hub assemblies.
15. Secure harness to axle and differential with cable ties.
16. Secure harness to axle with clips.
17. Secure harness to chassis with cable ties.
18. Fit both back plates to hub assemblies and secure with bolts.
19. Fit rear wheels and tighten to ***130 Nm (95 lbf.ft)*** .
20. Lower vehicle.

MASTER CYLINDER

Service repair no - 70.30.08

Remove

1. Disconnect battery negative lead.
2. Place a container under the master cylinder to collect any brake fluid spillage.

CAUTION: Do not allow brake fluid to contact paint finished surfaces as paint may be damaged. If spilled, remove fluid and clean area with clean warm water.

3. Clean area around master cylinder ports.

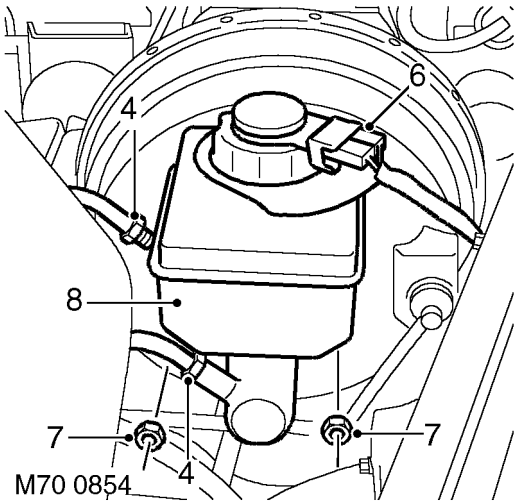

4. Loosen 2 unions securing brake pipes to master cylinder ports.
5. Disconnect both brake pipes from master cylinder. Cover, not plug, pipe ends to prevent entry of dirt.
6. Disconnect 2 Lucars from reservoir cap.
7. Remove 2 nuts securing master cylinder to brake servo.
8. Withdraw master cylinder from servo and remove.
   Do not carry out further dismantling if component is removed for access only.
9. Carefully ease reservoir from master cylinder by rolling it from seals.
10. Remove seals from master cylinder.

NOTE: Master cylinder to reservoir seals are different sizes.

11. Fit NEW seals to master cylinder, ensuring seals are fitted to correct ports.
12. Fit reservoir to master cylinder.

Refit

13. Ensuring that water ingress seal is in position, fit master cylinder to servo.
14. Fit nuts securing master cylinder to servo and tighten to ***26 Nm (19 lbf.ft)*** .
15. Connect brake pipes to master cylinder and tighten unions to ***15 Nm (11 lbf.ft)*** .
16. Connect Lucars to reservoir cap.
17. Fill reservoir with recommended brake fluid. ***See LUBRICANTS, FLUIDS AND CAPACITIES, Information.***
18. Bleed the brake system. ***See Adjustment.***
19. Reconnect battery negative lead.

SERVO ASSEMBLY

Service repair no - 70.50.01

Remove

Before starting, refer to general brake service practice. ***See Adjustment.***

NOTE: The non-return valve and grommet are the only serviceable components. In event of failure or damage, fit a new unit.

1. Remove master cylinder. ***See this Section.***

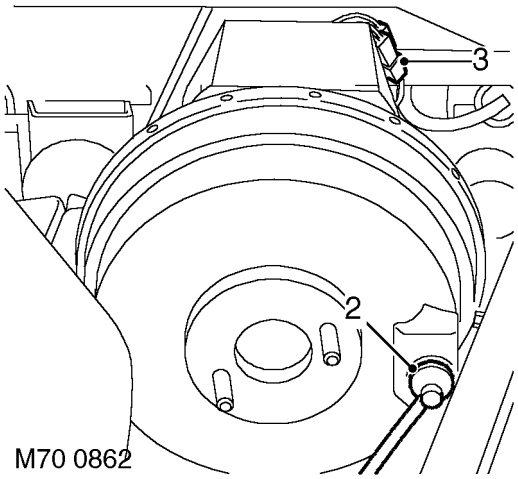

2. Release vacuum hose from servo.
3. Disconnect brake light switch Lucars.

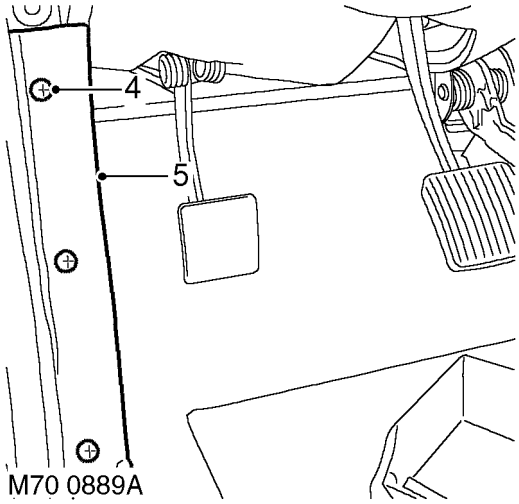

4. Remove 3 screws securing closing panel to lower 'A' post.
5. Release closing panel sufficient to gain access to brake pedal return springs.

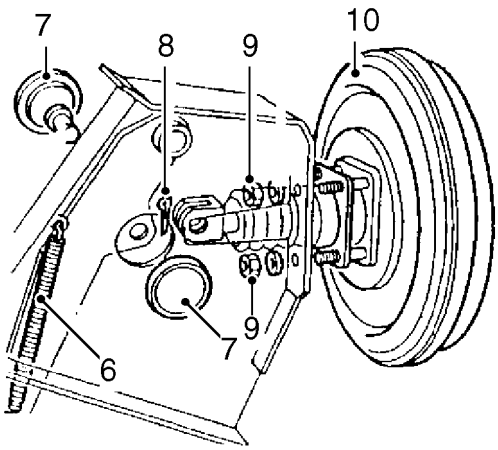

M70 0863A

6. Release 2 brake pedal return springs from brake pedal.
7. Remove blanking grommets from either side of pedal box.
8. Remove split pin and clevis pin securing servo push rod to brake pedal.
9. Remove 2 nuts securing servo to pedal box.
10. Remove servo assembly and rubber washer from pedal box.

Refit

11. Fit rubber washer and servo assembly to pedal box.
12. Fit nuts securing servo to pedal box and tighten to ***14 Nm. (10 lbf.ft)***
13. Position brake pedal to servo push rod.
14. Fit clevis pin and NEW split pin to secure brake pedal to servo push rod.
15. Fit blanking grommets to each side of pedal box.
16. Attach pedal return springs to brake pedal.
17. Position closing panel and tighten screws to lower 'A' post.
18. Connect vacuum hose to servo.
19. Connect brake switch Lucars.
20. Fit brake master cylinder. ***See this Section.***

MODULATOR UNIT - ABS

Service repair no - 70.65.49

Remove

1. Position cloth under modulator to absorb any fluid spillage.

CAUTION: Do not allow brake fluid to contact paint finished surfaces as paint may be damaged. If spilled, remove fluid and clean area with clean warm water.

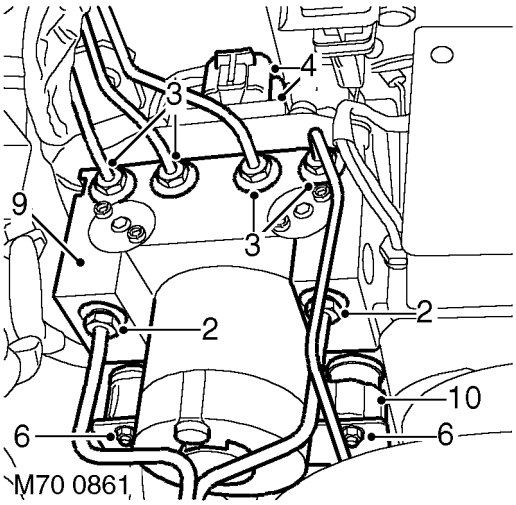

2. Disconnect 2 inlet brake pipe unions from pump side of modulator.
3. Disconnect 4 outlet brake pipe unions from top of modulator.

CAUTION: Plug the connections.

4. Disconnect 2 multiplugs from rear of modulator.
5. Loosen nut securing rear of modulator to mounting bracket.
6. Remove 2 nuts securing front of modulator to mounting bracket.
7. Release modulator from mounting bracket.
8. Disconnect multiplug from base of modulator.
9. Remove modulator.
   Do not carry out further dismantling if component is removed for access only.
10. Remove 3 mounting rubbers from old modulator and fit to new.

Refit

11. Position modulator to mounting bracket and connect multiplug.
12. Fit modulator to mounting bracket and tighten nuts to ***9 Nm (7 lbf.ft)*** .
13. Connect 2 multiplugs to rear of modulator.
14. Remove plugs from brake pipes and modulator.
15. Clean brake pipe unions.
16. Connect brake pipe unions to modulator ensuring pipes are connected to their correct ports.
17. Tighten all unions to ***14 Nm (10 lbf.ft)*** .
18. Bleed brake system. ***See Adjustment.***

NOTE: To ensure correct operation, the ABS system MUST be tested using TestBook.

BRAKE CALIPER - FRONT

Service repair no - 70.55.02

Remove

1. Loosen front road wheel nuts.
2. Raise front of vehicle.

WARNING: Support on safety stands.

3. Remove road wheel.

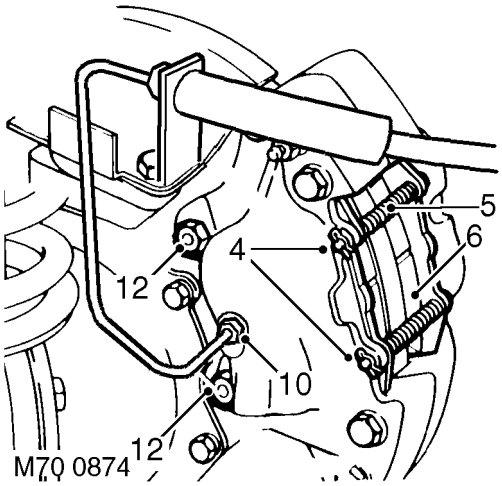

4. Remove split pins from pad retaining pins.
5. Remove brake pad retainers and springs.
6. Remove brake pads and shim if fitted.
7. Pull back brake hose shield.
8. Clamp brake hose using a suitable clamp.
9. Position container beneath brake caliper to collect spillage.
10. Loosen brake pipe union and disconnect from caliper.
11. Plug brake pipe and caliper connections.
12. Remove 2 bolts securing caliper.
13. Remove brake caliper.

Refit

14. Clean caliper to hub mating faces.
15. Position caliper to hub, fit bolts and tighten to ***82 Nm (60 lbf.ft).***
16. Remove plugs from pipe to caliper connections and wipe.
17. Connect pipe to caliper, tighten union to ***15 Nm (11 lbf.ft).***
18. Apply a light film of grease to rear of brake pads.

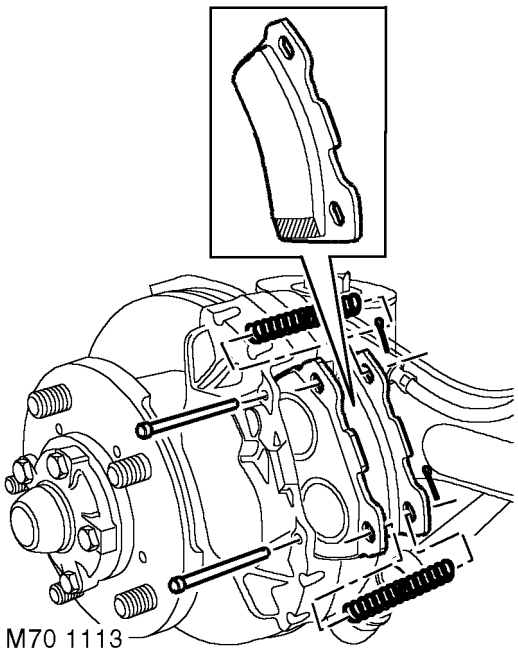

19. Fit pads to calipers.
    From 02MY, ensure pads are correctly fitted, with leading edge chamfer fitted as shown.
20. Fit pad retainers and springs.
21. Fit split pins to retainers.
22. Remove brake hose clamp.
23. Bleed brakes. ***See Adjustment.***
24. Depress brake pedal to seat pads onto discs.
25. Fit road wheels, remove axle stands and tighten nuts to ***130 Nm (96 lbf.ft).***

BRAKE CALIPER - REAR

Service repair no - 70.55.03

Remove

1. Loosen rear road wheel nuts.
2. Raise rear of vehicle.

WARNING: Support on safety stands.

3. Remove road wheel.

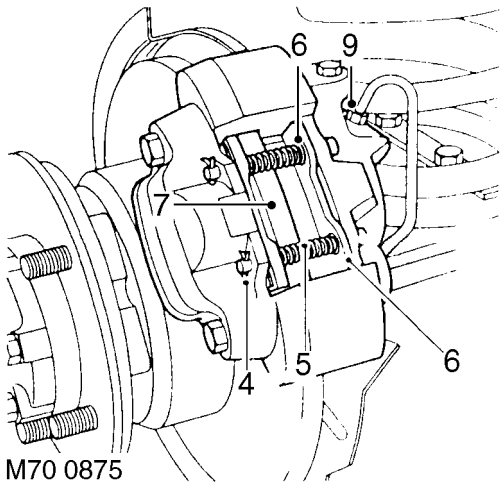

4. Remove split pins from brake pad retaining pins.
5. Remove brake pad retaining pins.
6. Remove brake pad retainer springs.
7. Remove brake pads and shim if fitted.
8. Position container beneath brake caliper to collect spillage.
9. Loosen brake pipe union and disconnect from caliper.

CAUTION: Plug the connections.

10. Remove 2 bolts securing caliper.
11. Remove brake caliper.

Refit

12. Clean caliper to axle bracket mating faces.
13. Position caliper to axle bracket, fit bolts and tighten to ***82 Nm (60 lbf.ft).***
14. Remove plugs from pipe and caliper.
15. Clean brake pipe union and caliper.
16. Connect pipe to caliper, tighten union to ***15 Nm (11 lbf.ft).***
17. Apply a light film of grease to rear of brake pads.

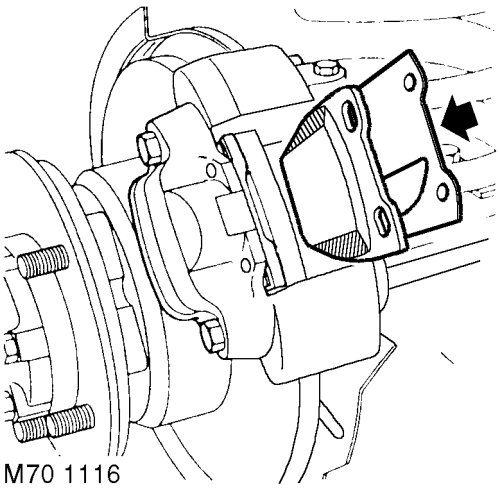

18. Fit brake pads.
    From 02MY, ensure shims are correctly fitted, see illustration.

NOTE: Vehicles from 02MY have leading and trailing edge chamfers on rear pads.

19. Fit pad retainer springs.
20. Fit brake pad retaining pins and secure with new split pins.
21. Bleed brakes. ***See Adjustment.***
22. Depress brake pedal to seat pads onto discs.
23. Fit road wheels, remove axle stands and tighten nuts to ***130 Nm (96 lbf.ft).***

SWITCH - STOP LIGHT

Service repair no - 70.35.42

Remove

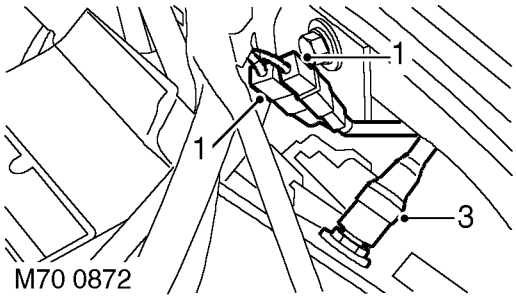

1. Disconnect 2 Lucars from stop light switch.
2. Remove mastic from around switch.
3. Remove switch from pedal box.

Refit

4. Fit and tighten switch to pedal box.
5. Apply mastic to switch.
6. Connect 2 Lucars to switch.

FRONT BRAKE PADS - FROM 02MY

Service repair no - 70.40.02

Remove

1. Remove front road wheels.
2. Clean exterior of calipers.

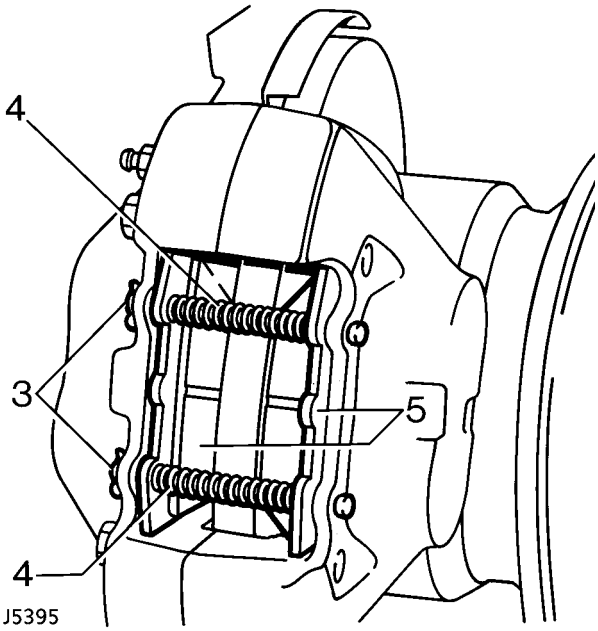

3. Remove split pin from retaining pins.
4. Remove pad retaining pins and anti-rattle springs.
5. Remove brake pads.
6. Clean exposed parts of pistons, using new brake fluid. Wipe away excess with a lint free cloth.

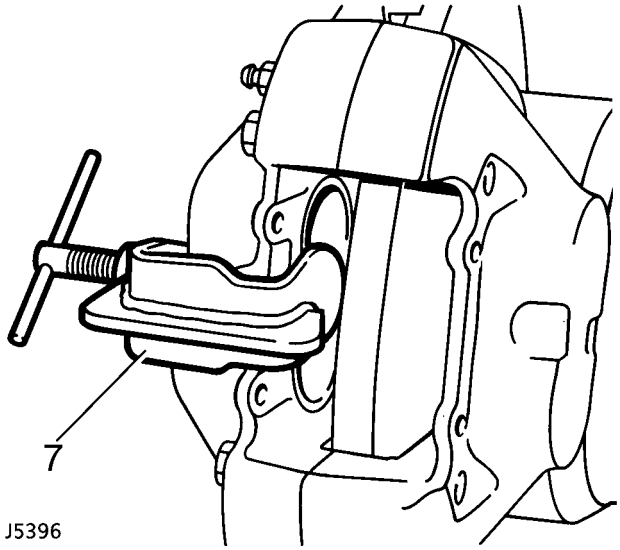

7. Using piston clamp **LRT-70-500** press each piston back into its bore. Ensure that displaced brake fluid does not overflow from reservoir.

Refit

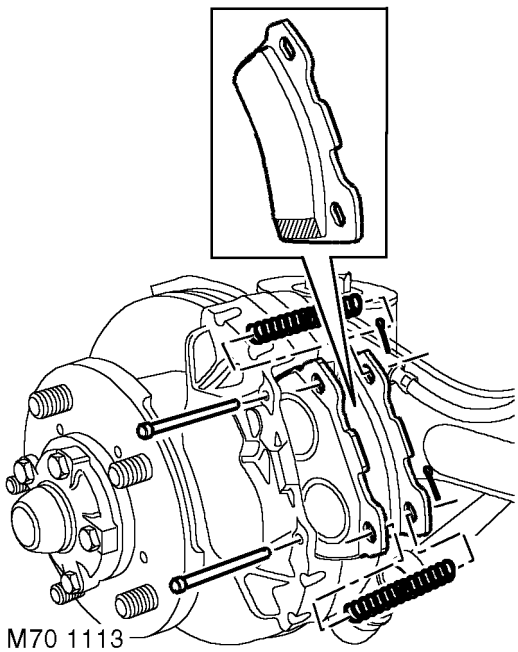

8. Fit brake pads.

NOTE: Ensure pads are correctly fitted, with leading edge chamfer fitted as shown.

9. Fit pad retaining pins and anti-rattle springs. Secure with new split pins.

10. Apply service brake pedal several times to locate pads.
11. Fit road wheels, remove chassis stands and jack. Tighten wheel nuts to ***130 Nm (96 lbf/ft).***
12. Check fluid reservoir. Top up if necessary, using correct grade of fluid. ***See LUBRICANTS, FLUIDS AND CAPACITIES, Information.***

REAR BRAKE PADS - FROM 02MY

Service repair no - 70.40.03

Remove

1. Remove rear road wheels.
2. Clean exterior of calipers.

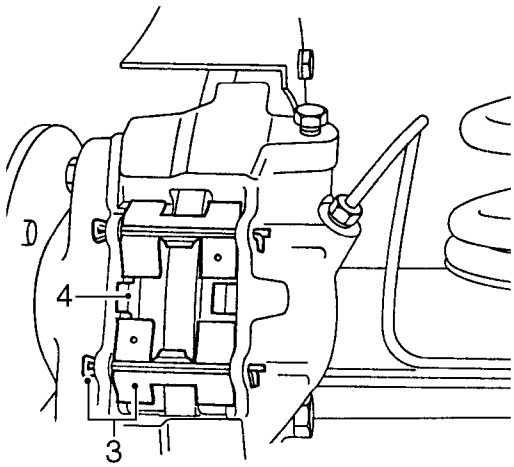

J6327

90 Models

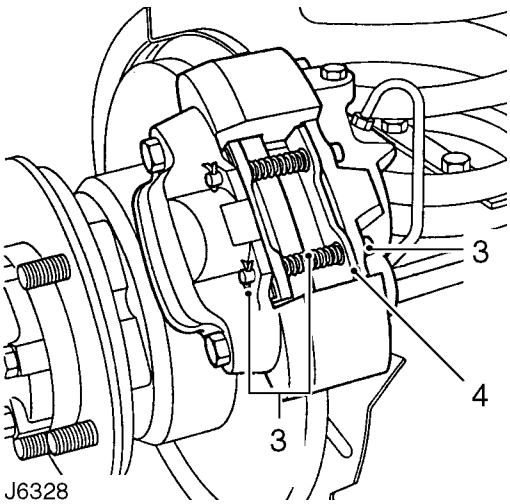

J6328

110/130 Models

3. Remove pad retaining pins and anti-rattle springs. Note differences between 90 and 110/130 models.
4. Remove brake pads and shims.

5. Clean exposed parts of pistons, using new brake fluid.
6. Wipe away excess fluid with lint free cloth.

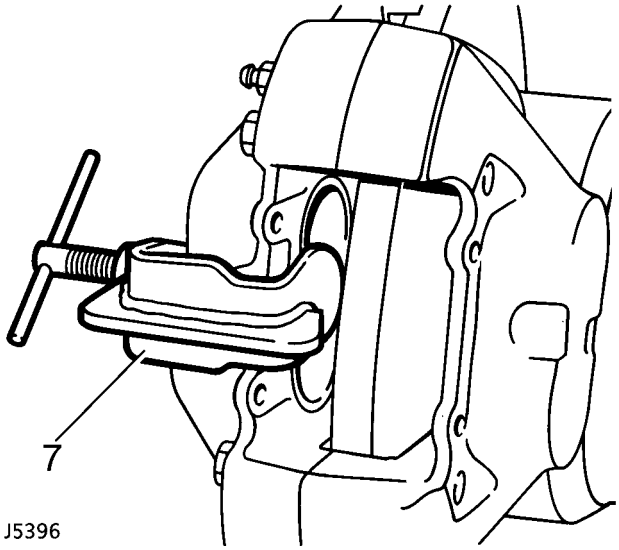

7. Using piston clamp **LRT-70-500** press each piston back into its bore. Ensure that displaced brake fluid does not overflow from reservoir.

Refit

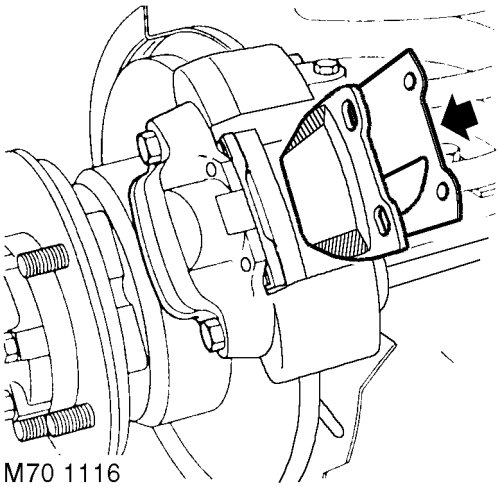

8. Fit brake pads and shims.
   Ensure shims are correctly fitted, see illustration.

NOTE: Vehicles from 02MY have leading and trailing edge chamfers on rear pads. Shims are also fitted.

9. Fit anti-rattle springs and secure with retaining pins.
10. Apply service brake pedal several times to locate pads.
11. Fit road wheels, remove chassis stands and jack. Tighten wheel nuts to ***130 Nm (96 lbf/ft).***
12. Check fluid reservoir, top up if necessary, using correct grade of fluid. ***See LUBRICANTS, FLUIDS AND CAPACITIES, Information.***

76 - CHASSIS AND BODY

CONTENTS

Page

DESCRIPTION AND OPERATION

FRONT SEAT RECLINE - FROM 02MY 1
SOFT TOP - FROM 02MY 1
TAIL DOOR - FROM 02MY 2

ADJUSTMENT

TAIL DOOR STRIKER 1

REPAIR

PANEL - UNDERBELLY - FRONT AND CENTRE 1
CUBBY BOX 1
TRIM CASING - TAIL DOOR - UP TO 02MY 2
LATCH - TAIL DOOR - UP TO 02MY 3
CARPET - LUGGAGE COMPARTMENT 3
WING - FRONT 4
STEP - FOLDING - REAR DOOR 7
LINER - FRONT WHEEL ARCH 8
FRONT BUMPER 9
DOOR - REAR 9
DOOR - TAIL - REMOVE 10
GLASS/SEALING RUBBER - TAIL DOOR - UP TO 02MY 11
SEAT BELT - FRONT 12
SEAT BELT - CENTRE - REAR 13
SEAT BELT - REAR - SIDE 13
SEAT - REAR 14
COVER - CUSHION - REAR SEAT 15
COVER - SQUAB - REAR SEAT 16
REGULATOR - REAR DOOR GLASS 16
TRIM CASING - REAR DOOR 17
AUXILLIARY SWITCH PANEL 18
LOWER FASCIA PANEL - UP TO 02MY 19
PANEL - MOUNTING - FRONT DOOR - FROM 02MY 23
PANEL - MOUNTING - REAR DOOR - FROM 02MY 25
FACIA CONSOLE - FROM 02MY 27
GLASS - REAR DOOR - FROM 02MY 29
GLASS/SEALING RUBBER - TAIL DOOR - FROM 02MY 30
TRIM CASING - FRONT DOOR - FROM 02MY 31
TRIM CASING - TAIL DOOR - FROM 02MY 33
PLASTIC SHEET - FRONT DOOR - FROM 02MY 34

76 - CHASSIS AND BODY

CONTENTS

Page

PLASTIC SHEET - REAR DOOR - FROM 02MY 34
LOCK - TAIL DOOR - FROM 02MY 35
LOWER FASCIA PANEL - FROM 02MY 36

FRONT SEAT RECLINE - FROM 02MY

Front seat recline has been improved by removing the bulkhead situated behind the front seats. This enables the front seats to be reclined further than previous Defender 90's.

This change is only applicable to 90 County Station Wagon models. Six seat derivatives of this model will provide greater incline of the front seats and increased cabin space.

SOFT TOP - FROM 02MY

The soft top is replaced by an improved version manufactured from PVC. The PVC soft top gives the following improvements:

- Resistance to shrinkage
- No zips
- Resistant to dust and water ingress
- Weld seams and joints
- Non cotton base construction
- Easy to clean

Beach Bar

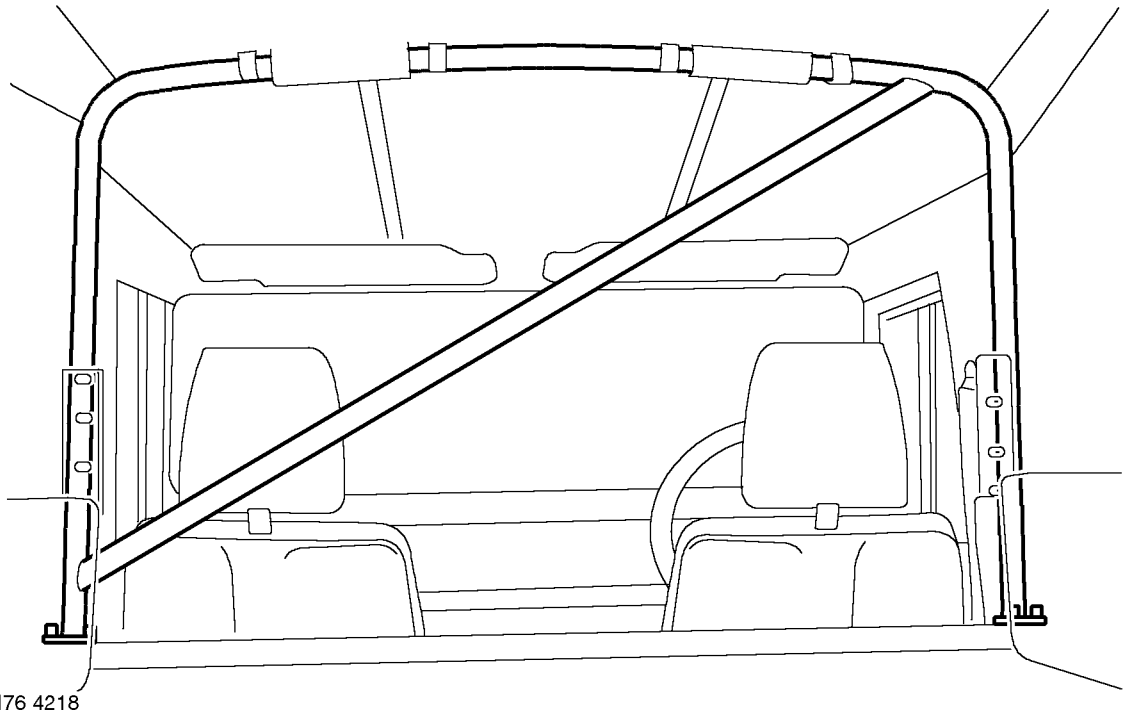

A beach bar, currently used on military vehicles only, will be introduced for fitment on all 02MY soft top vehicles. The bar is located behind the front seats and is manufactured from large diameter steel tubing with a diagonal bar which gives additional rigidity.

TAIL DOOR - FROM 02MY

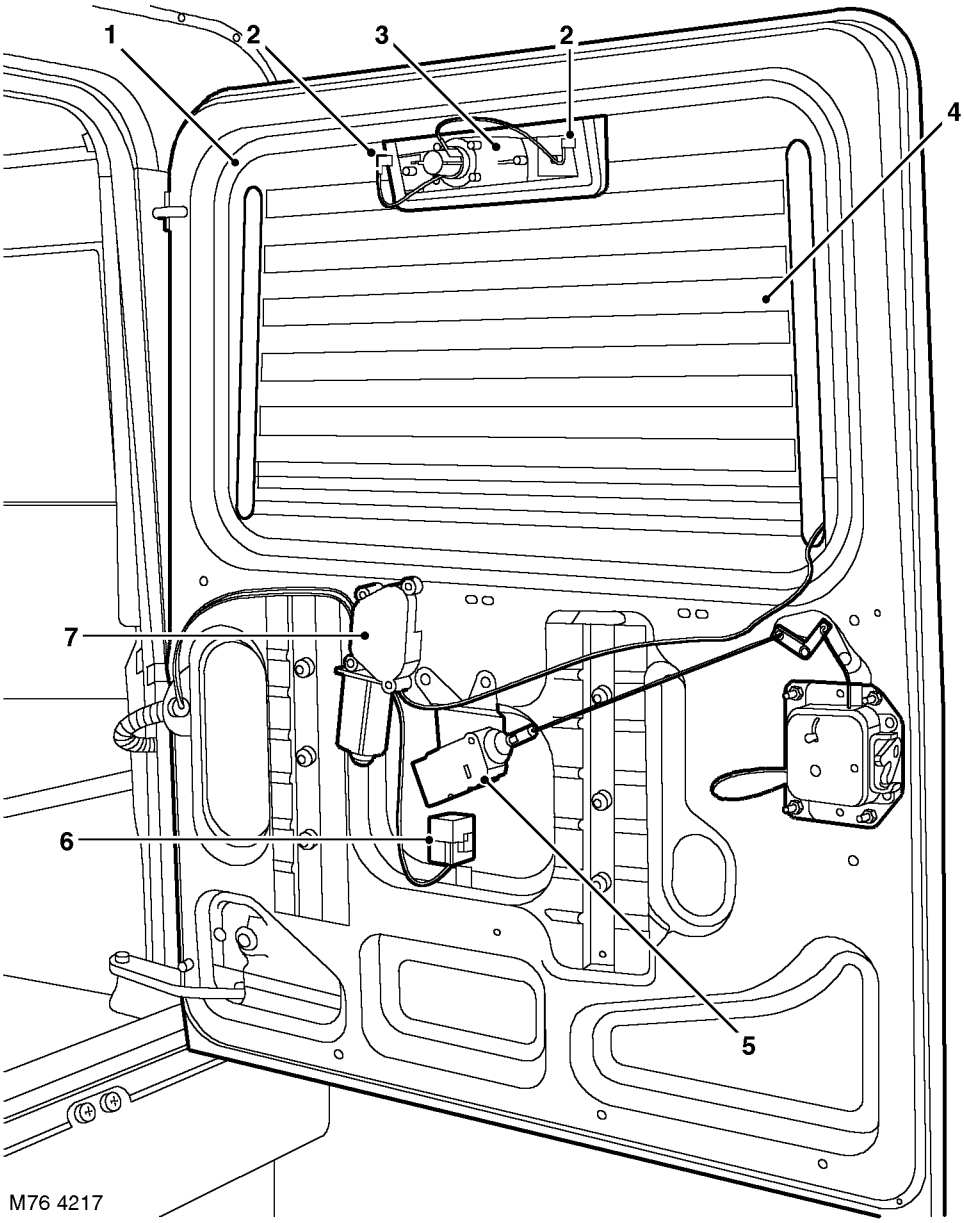

1. Rubber window seal
2. CHMSL earth connection
3. CHMSL
4. Tail door glass and HRW element
5. Tail door CDL actuator
6. Rear wiper relay
7. Wiper motor

The tail door for 02MY is completely redesigned to address manufacturing complexity, corrosion and water ingress probelms on previous tail doors.

The tail door is now a one piece outer skin pressing located on a reinforced steel, zinc plated frame. This gives improved build quality, water integrity and minimal welding.

A new tail door glass is introduced with a one piece continuous rubber seal. The tail door glass has a revised Heated Rear Window (HRW) element on the glass which removes the need to route wires up the sides of the frame. The HRW element now has integral Lucar connections in the element which provide the earth connections for the new centre high mounted stop lamp.

The inner trim panel is new and accommodates the CDL actuator and linkages.

The new tail door also contains a relay for rear wiper motor operation. Refer to the Wipers section for details.

Because the new tail door uses the current hinges and latch and retains the same geometry as the previous tail door, the new tail door assembly is available as a service item for current vehicles.

TAIL DOOR STRIKER

Service repair no - 76.37.25

Check

1. Before adjusting door striker, ensure spare wheel is fitted to tail door.

Adjust

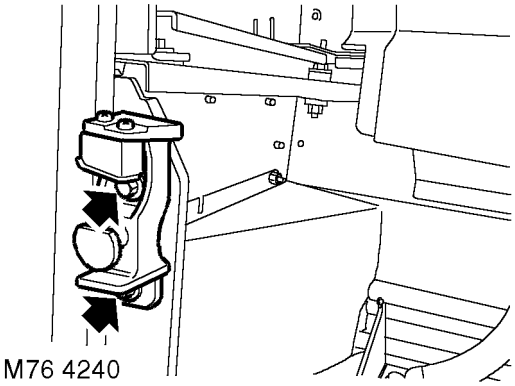

1. Loosen bolts securing striker.
2. Adjust striker and tighten bolts to ***10 Nm (7 lbf.ft).***
3. Close door and check for correct latching.

PANEL - UNDERBELLY - FRONT AND CENTRE

Service repair no - 76.10.50

Remove

1. Raise vehicle on 4 post ramp.
2. Mark front propellor shaft and front differential flanges for reassembly.

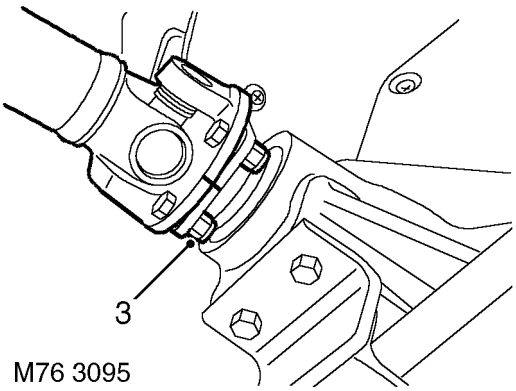

3. Remove 4 bolts and release propellor shaft from front differential.

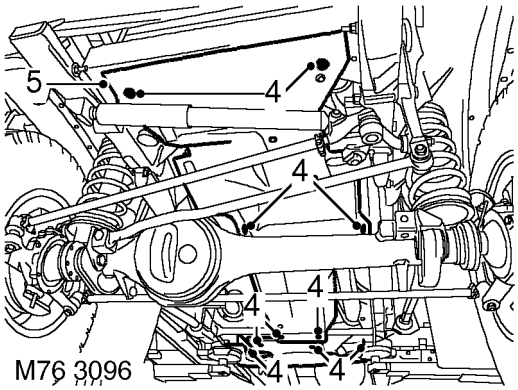

4. Remove 12 bolts securing front and centre underbelly panels.
5. Remove front and centre underbelly panels.

Refit

6. Position front and centre underbelly panels.
7. Fit and tighten bolts securing front and centre underbelly panels.
8. Position front propellor shaft to differential and tighten bolts to ***48 Nm (35 lbf.ft).***
9. Lower vehicle.

CUBBY BOX

Service repair no - 76.25.04

Remove

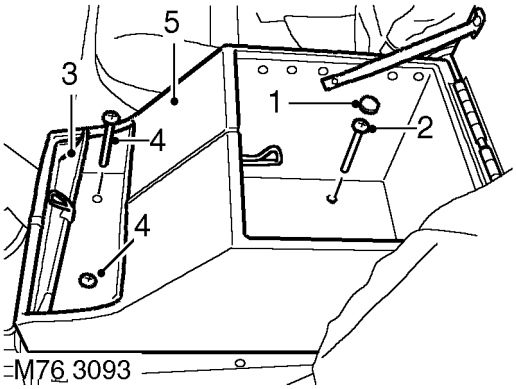

1. Open cubby box lid and remove 2 caps concealing rear fixing bolts.
2. Remove bolts securing rear of cubby box.
3. Open flap concealing front fixing bolts.
4. Remove bolts securing front of cubby box.
5. Remove cubby box.

Refit

6. Fit cubby box to vehicle.
7. Fit bolts securing front of cubby box and reposition flap.
8. Fit bolts securing rear of cubby box.
9. Fit caps over bolts.
10. Close cubby box lid.

TRIM CASING - TAIL DOOR - UP TO 02MY

Service repair no - 76.34.09

Remove

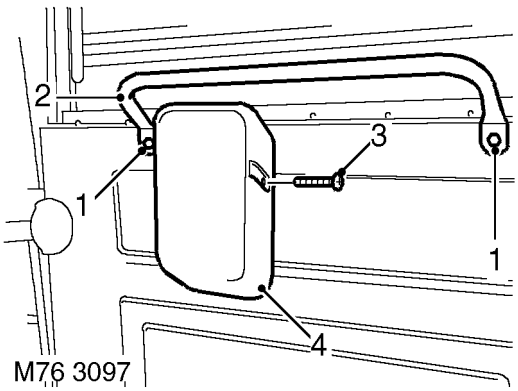

1. Remove 2 bolts securing grab handle to tail door.
2. Remove grab handle.
3. Remove 2 screws securing wiper motor cover.
4. Remove wiper motor cover.

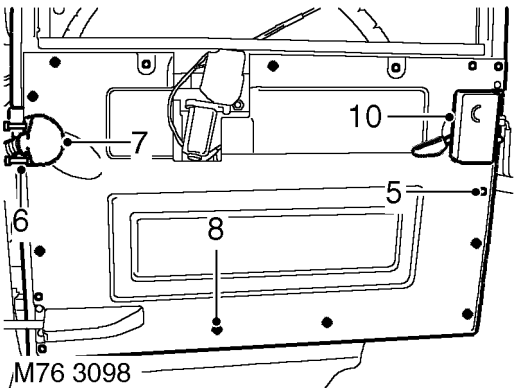

5. Remove 7 screws securing trim casing to door.
6. Remove 2 screws securing wiper motor harness cover.
7. Remove harness cover.
8. Release 7 of 8 trim studs securing trim casing.
9. Remove trim casing from remaining stud.
10. Collect door lock cover.

Refit

11. Position door lock cover.
12. Position trim casing and secure trim casing.
13. Position harness cover and secure with screws.
14. Secure trim pad with screws.
15. Fit wiper motor cover and secure with screws.
16. Fit grab handle and secure with screws.

LATCH - TAIL DOOR - UP TO 02MY

Service repair no - 76.37.16

Remove

1. Remove tail door trim casing. ***See this Section.***

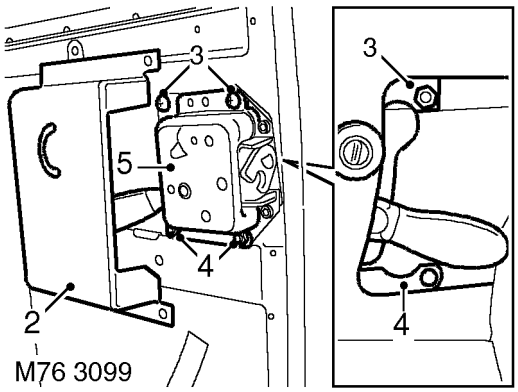

2. Collect latch cover.
3. Remove 2 screws securing latch to door and collect captive nut bracket.
4. Remove 2 nuts securing latch to door and collect captive bolt bracket.
5. Remove latch assembly and collect foam gasket.

Refit

6. Fit foam gasket and latch assembly to tail door.
7. Fit captive nut and bolt brackets to tail door.
8. Secure latch to tail door with nuts and screws.
9. Fit cover to latch.
10. Fit tail door trim casing. ***See this Section.***

CARPET - LUGGAGE COMPARTMENT

Service repair no - 76.49.04

Remove

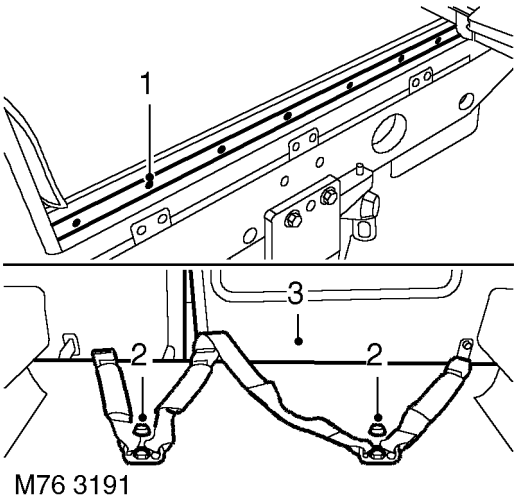

1. Remove 7 screws and remove carpet retainer.
2. Remove bolt covers and remove rear seat belt bolts.
3. Release rear seat catches and fold seats forward.
4. Remove luggage compartment carpet.

Refit

5. Position carpet.
6. Fold rear seats to position.
7. Align rear seat belts and tighten tighten bolts.
8. Fit bolt covers.
9. Position carpet retainer and tighten screws.

WING - FRONT

Service repair no - 76.10.24

Remove

1. Remove wheel arch liner. ***See this Section.***
2. Remove front grille. ***See this Section.***
3. Release fixings and remove cooling fan cowl.

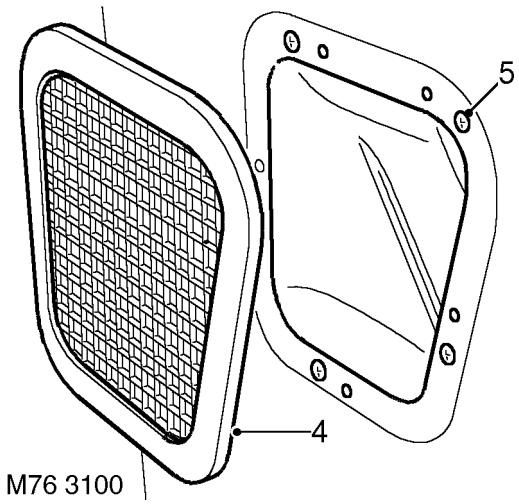

4. Remove air cleaner grille from front wing.
5. Remove 4 screws securing air intake elbow to wing.

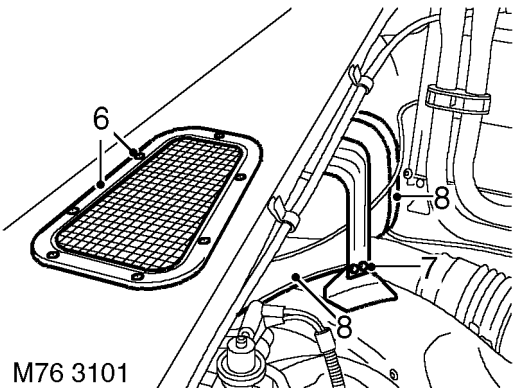

6. Remove 7 screws and remove heater air intake grille from wing.
7. Remove 2 bolts securing heater air intake bracket to inner wing. Remove bracket.
8. Remove heater air intake from wing and collect seal.

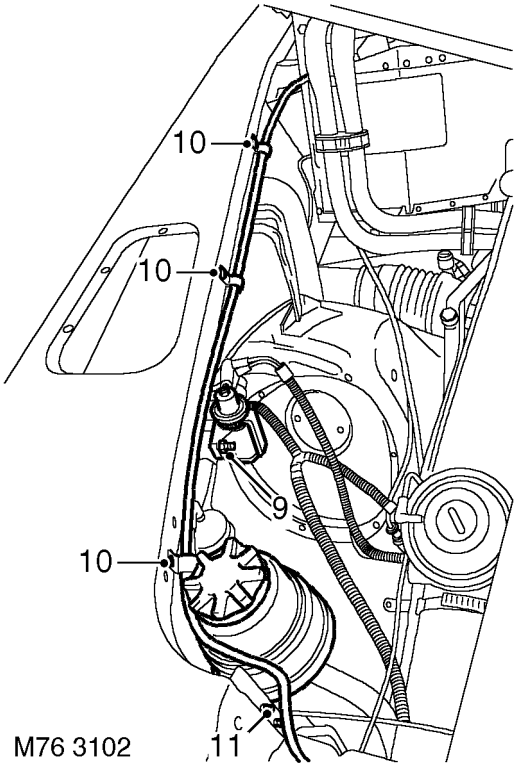

9. Remove 2 bolts securing EGR solenoid to inner wing and lay aside.
10. Remove 3 studs securing expansion tank pipe to inner wing.
11. Remove 2 bolts securing PAS reservoir to inner wing and lay aside.

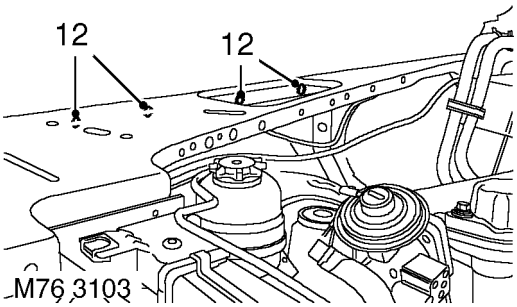

12. Remove 4 bolts securing outer wing to inner wing.

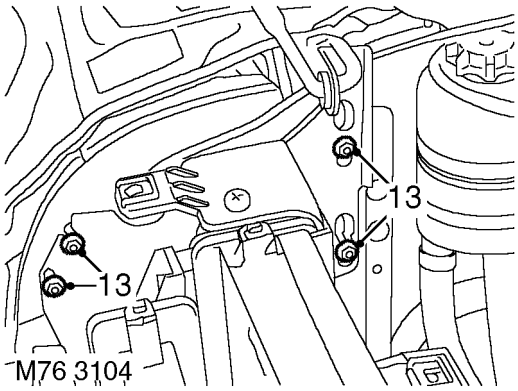

13. Remove 4 bolts securing radiator mounting bracket to wing.

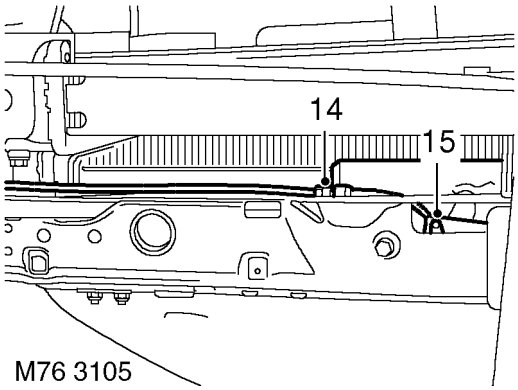

14. Loosen screw and release bonnet lock inner cable from bonnet lock.
15. Release bonnet lock outer cable from from bonnet lock.

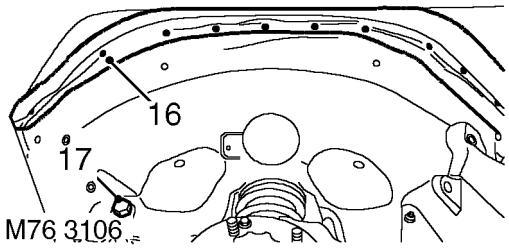

16. Push centre pins from studs securing wheel arch extension to wing, remove studs and remove wheel arch extension.
17. Remove bolt securing inner and outer wing to chassis.

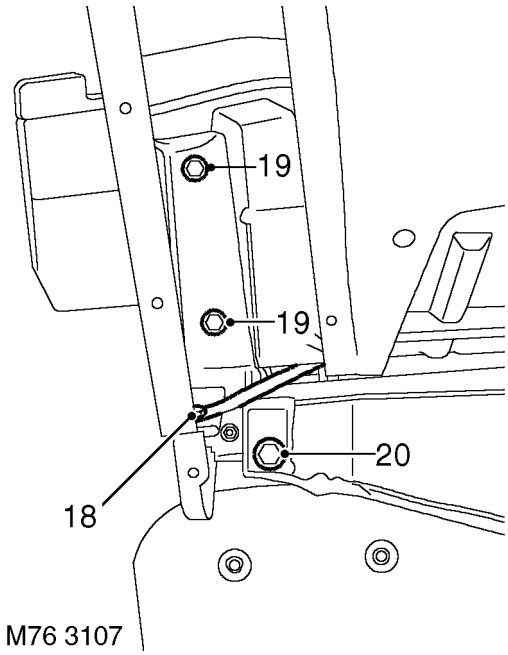

18. Remove nut and bolt securing support stay to wing.
19. Remove 4 bolts securing wing to 'A' post.
20. Remove bolt securing wing to bulkhead.

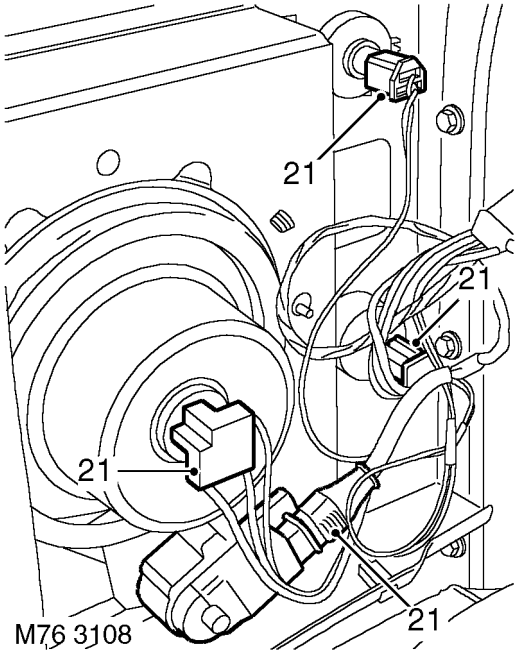

21. Disconnect headlamp, side lamp, repeater and indicator multiplugs.
22. With assistance, remove wing.

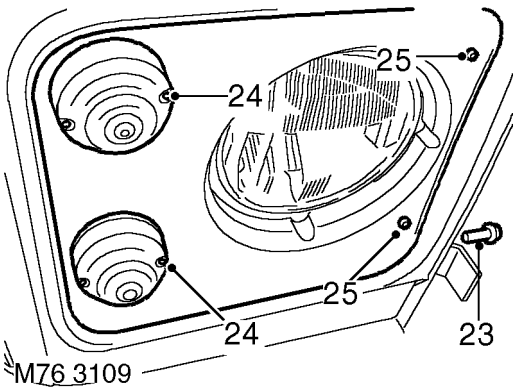

23. Remove bolt, remove grille support bracket.
24. Remove 4 screws securing side and indicator lamps.
25. Remove 2 screws securing headlamp finisher to wing, remove finisher.

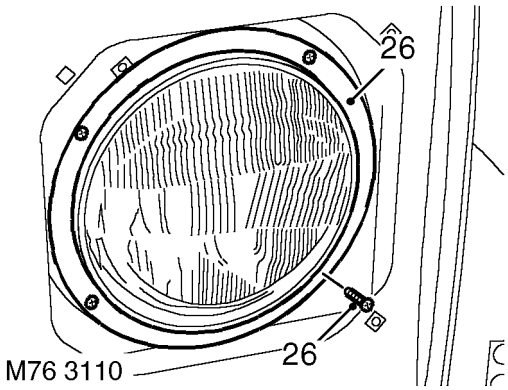

26. Remove 4 screws and remove headlamp from wing, collect sealing ring.

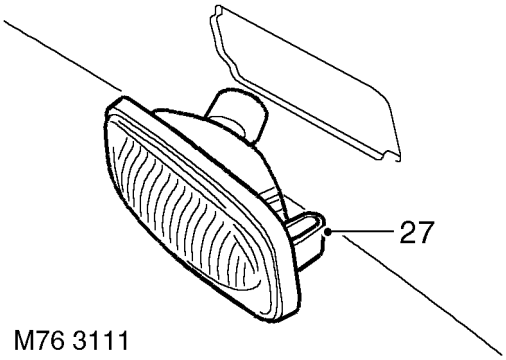

27. Release side repeater lamp from wing.

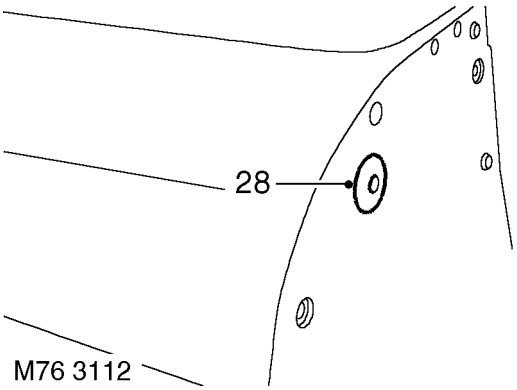

28. Remove bonnet cable grommet.

Refit

29. Fit bonnet cable grommet.
30. Fit side repeater lamp to wing.
31. Fit headlamp sealing ring, fit headlamp and tighten screws.
32. Fit headlamp finisher, side and indicator lamps and tighten screws.
33. Fit grille support bracket and tighten bolt.
34. With assistance, position and align wing to body and locate bonnet cable to wing.
35. Connect headlamp, indicator, side lamp and side repeater lamp multiplugs.
36. Fit bolt securing wing to bulkhead.
37. Fit bolts securing wing to 'A' post.
38. Fit nut and bolt securing support stay to wing.
39. Fit bolt securing inner and outer wing to chassis.
40. Fit bolts securing radiator bracket to wing.
41. Fit bolts securing outer wing to inner wing.
42. Align wing and finally tighten all bolts.
43. Position wheel arch extension to wing, and fit securing studs.
44. Position PAS reservoir to wing and tighten bolts.
45. Position expansion tank pipe and secure with studs.
46. Position EGR solenoid and tighten bolts.
47. Position heater air intake seal and fit air intake.
48. Fit heater air intake bracket and tighten bolts.
49. Fit heater air intake grille and tighten screws.
50. Align air cleaner intake elbow, tighten screws and fit grille.
51. Fit wheel arch liner. ***See this Section.***
52. Position bonnet release cable to lock and tighten screw.
53. Fit cooling fan cowl.
54. Fit front grille. ***See this Section.***

STEP - FOLDING - REAR DOOR

Service repair no - 76.10.41

Remove

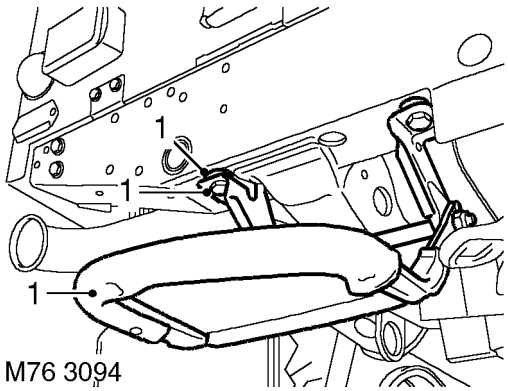

1. Remove 2 bolts securing step to chassis member, remove step and collect spacers.

Refit

2. Position step, fit spacer washers and tighten bolts.

LINER - FRONT WHEEL ARCH

Service repair no - 76.10.48

Remove

1. Raise front of vehicle.

WARNING: Support on safety stands.

2. Remove front wheel.
3. Support axle weight with jack.

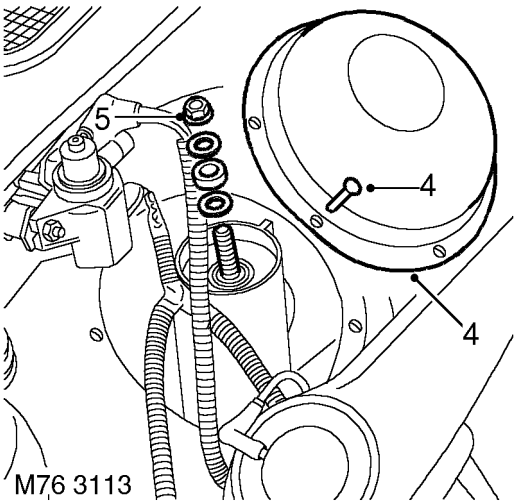

4. Remove 6 screws securing damper top cover to inner wing, remove cover.
5. Remove nut securing damper to top mounting bracket and collect rubber bush and 2 washers.

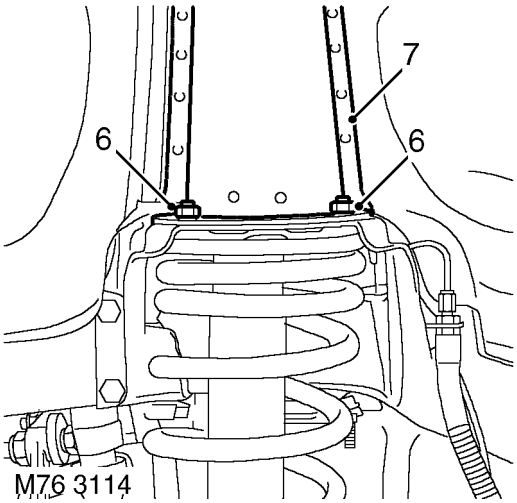

6. Remove 4 nuts securing damper to mounting bracket and collect washers.
7. Remove damper top cover.

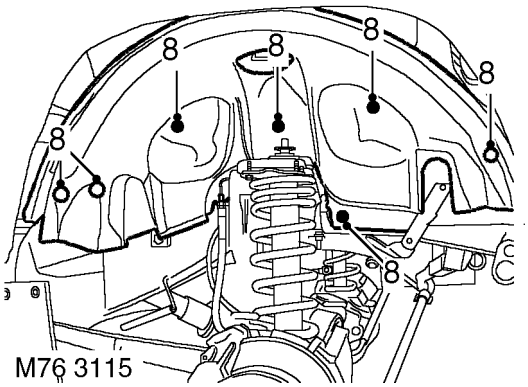

8. Remove 4 screws and 3 studs securing liner to inner wing. Remove liner.

Refit

9. Position liner, secure with screws and studs.
10. Fit damper mounting bracket and tighten nuts.
11. Position damper to mounting bracket, fit rubber bush and washers and tighten nut.
12. Fit damper cover to inner wing and secure with screws.
13. Fit road wheel.
14. Remove stands and lower vehicle.

FRONT BUMPER

Service repair no - 76.22.08

Remove

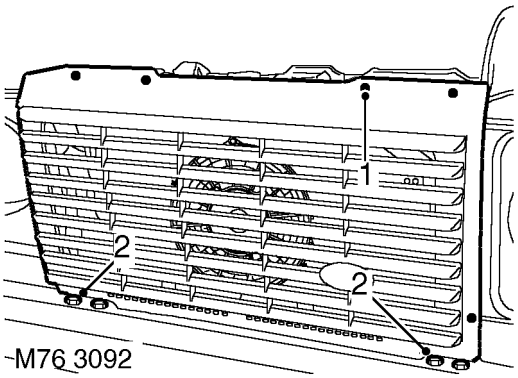

1. Remove 6 screws and remove front grille.
2. Remove 4 through bolts securing front bumper to chassis longitudinals.
3. Remove front bumper.

Refit

4. Fit front bumper to chassis longitudinals and secure with bolts.
5. Fit front grille and secure with screws.

DOOR - REAR

Service repair no - 76.28.02.99

Remove

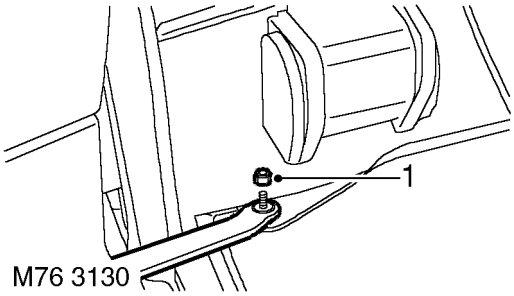

1. Remove nut securing door check strap.

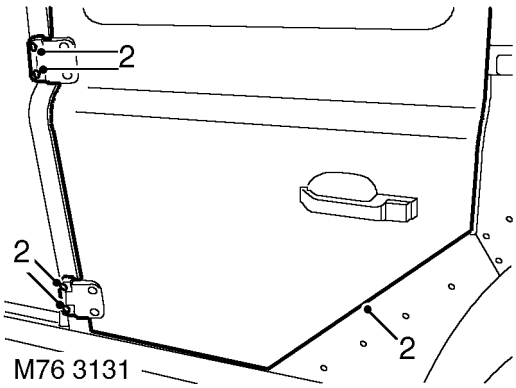

2. With assistance remove 4 bolts securing door to body and remove door.

Refit

3. With assistance position door and fit but do not tighten bolts.
4. Align door to body aperture and tighten bolts.
5. Fit and tighten check strap nut.

DOOR - TAIL - REMOVE

Service repair no - 76.28.19.99

Remove

1. Remove 3 nuts and remove spare wheel.

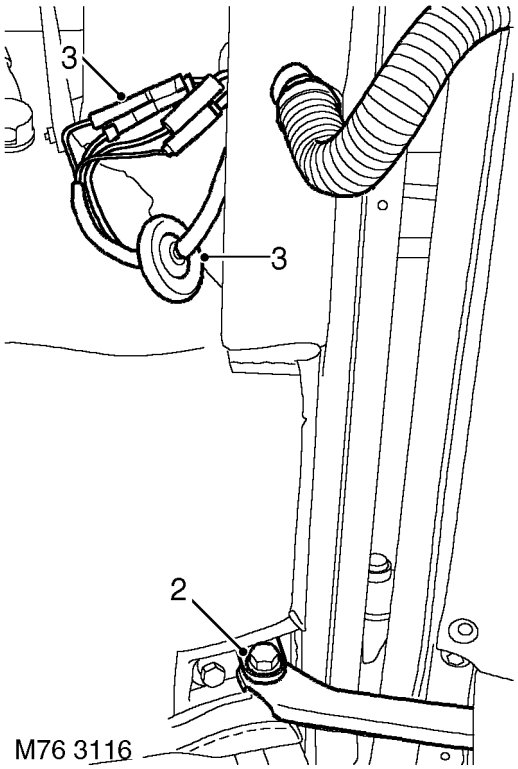

2. Remove bolt securing check strap to body.
3. Release harness grommet from harness cover, disconnect connectors and multiplug.
4. Release harness cover and harness from body.

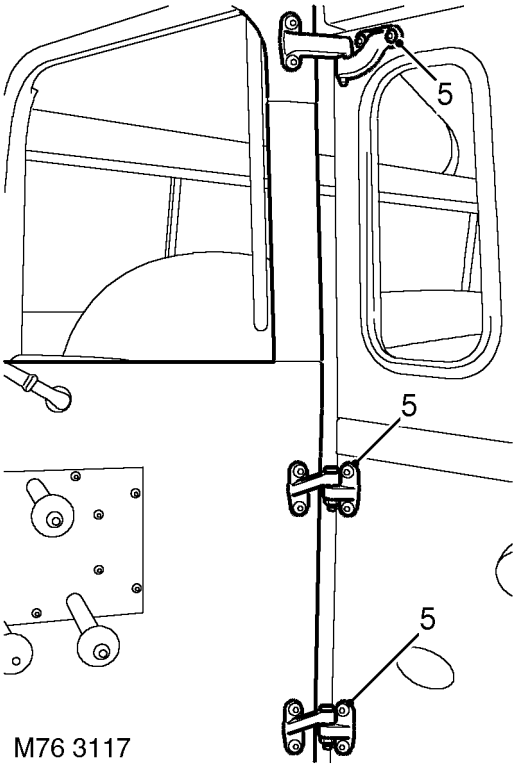

5. With assistance, remove 6 screws securing door hinges to body and remove door.

Refit

6. With assistance, position door and fit but do not tighten bolts.
7. Position check strap and tighten bolt.
8. Align door to body and tighten bolts.
9. Position harness through body and secure harness cover.
10. Secure harness connectors and multiplug.
11. Secure harness grommet to body.
12. Position spare wheel to tail door and tighten nuts.

GLASS/SEALING RUBBER - TAIL DOOR - UP TO 02MY

Service repair no - 76.31.22

Remove

1. Remove high level stop lamp. ***See ELECTRICAL, Repair.***
2. Remove 3 nuts and remove spare wheel.

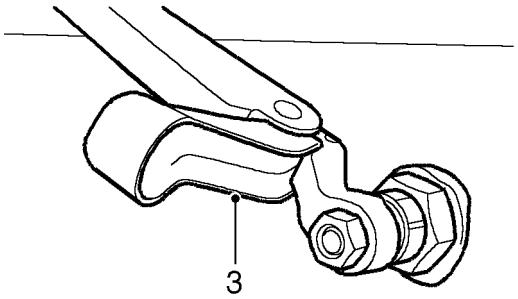

M76 3119

3. Raise cover, remove nut and remove rear wiper arm assembly.

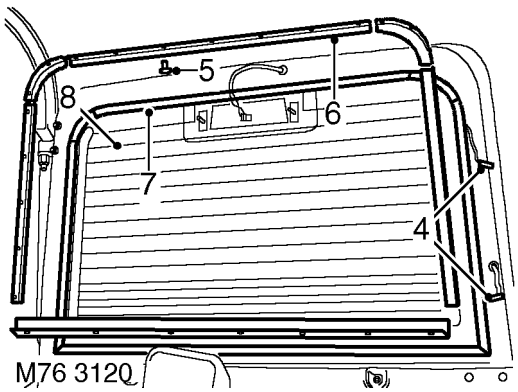

M76 3120

4. Disconnect 2 HRW Lucars.
5. Remove 30 screws securing door glass retainers.
6. Remove door glass retainers.
7. Remove door glass sealing strips.
8. Release and remove door glass.

Refit

9. Clean old sealant from glass aperture.
10. Apply sealant to glass aperture.
11. Position door glass, fit sealing strips and glass retainers and secure with screws.
12. Connect HRW lucars.
13. Fit high level stop lamp. ***See ELECTRICAL, Repair.***
14. Fit rear wiper arm assembly and secure with nut.
15. Position spare wheel and secure with nuts.

SEAT BELT - FRONT

Service repair no - 76.73.13

Remove

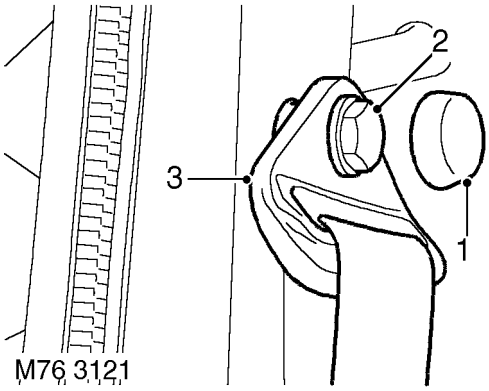

1. Remove cap from seat belt guide bolt.
2. Remove bolt securing seat belt guide to 'B' post.
3. Release belt from 'B' post mounting.

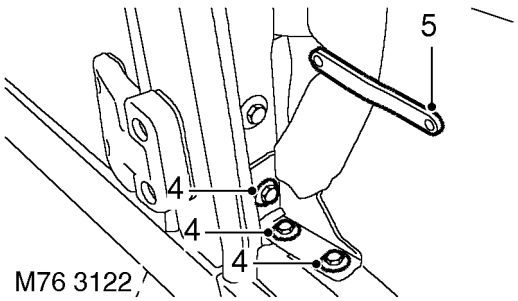

4. Remove 3 bolts securing belt bracket to seat base.
5. Remove 2 studs securing seat belt retaining clip.
6. Remove retaining clip.

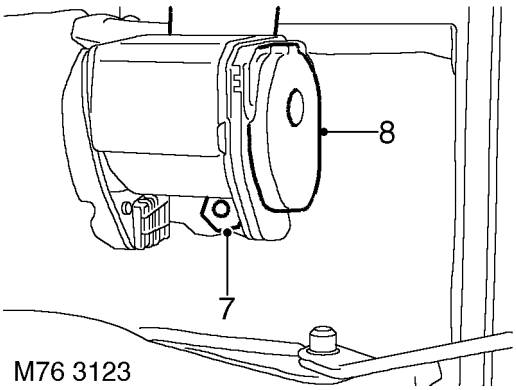

7. Remove bolt securing inertia reel to body.
8. Remove automatic belt assembly.

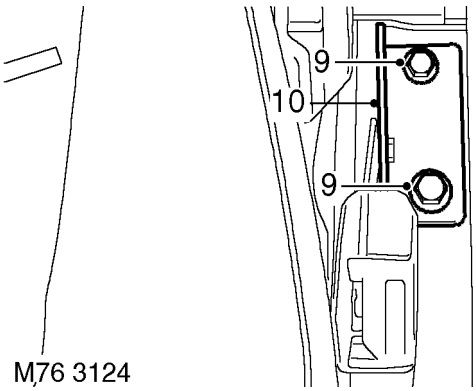

9. Remove 2 bolts securing stalk to body.
10. Remove stalk.

Refit

11. Position stalk and tighten bolts.
12. Position automatic belt assembly to body and tighten bolt to ***38 Nm***
13. Unreel portion of belt.
14. Position bracket to seat base, tighten bolts.
15. Position belt to 'B' post mounting and tighten bolt to ***32 Nm (24 lbf.ft).***
16. Fit cap to bolt head.
17. Position belt retaining clip to seat base and secure with studs.

SEAT BELT - CENTRE - REAR

Service repair no - 76.73.20

Remove

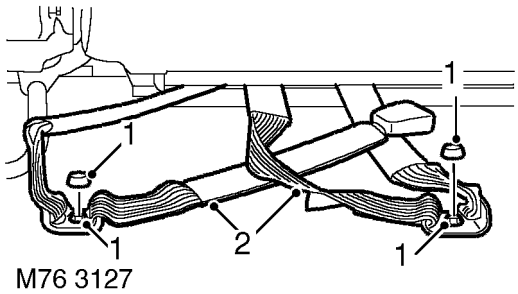

1. Remove seat belt bolt caps and remove bolts.
2. Remove seat belt and stalk.

Refit

3. Position seat belt and stalk.
4. Fit and tighten bolts to ***32 Nm (24 lbf.ft),*** and fit bolt caps.

SEAT BELT - REAR - SIDE

Service repair no - 76.73.23

Remove

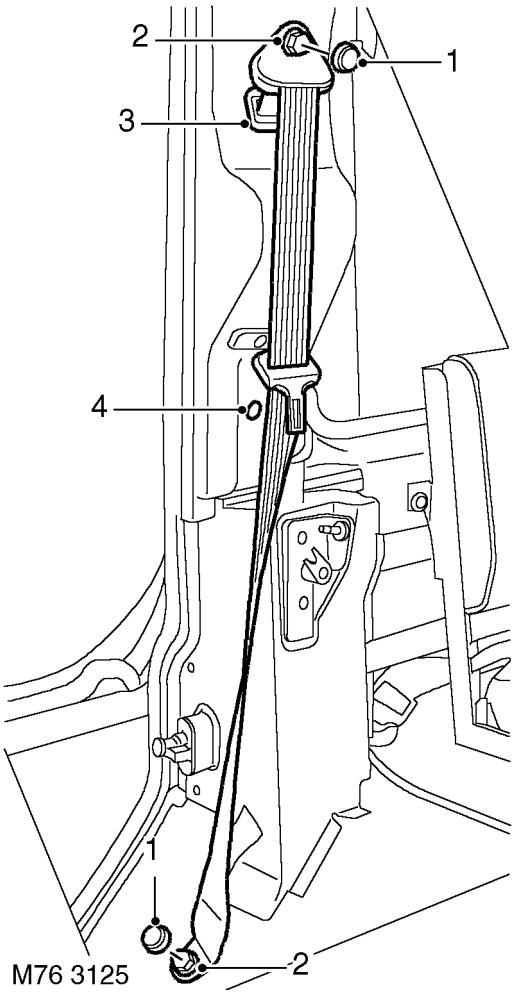

1. Remove cap from seat belt guide bolt.
2. Remove seat belt upper and lower securing bolts.
3. Remove seat belt guide from ’D’ post finisher.
4. Remove 2 studs securing finisher to ’D’ post.

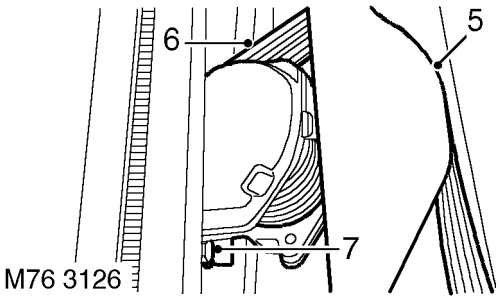

5. Release finisher from body upper rail and 'D' post.
6. Pull seat belt through 'D'post finisher.
7. Remove bolt securing seat belt to 'D' post and remove belt assembly.

Refit

8. Position seat belt assembly to 'D' post and tighten bolt to ***32 Nm (24 lbf.ft).***
9. Extend seat belt and position through 'D' post finisher.
10. Fit and tighten seat belt upper and lower securing bolts to ***32 Nm (24 lbf.ft).***
11. Secure 'D'post finisher to body upper rail.
12. Fit belt guide to 'D' post finisher and fit finisher retaining studs.
13. Fit cap to seat belt bolt.

SEAT - REAR

Service repair no - 78.10.48.99

Remove

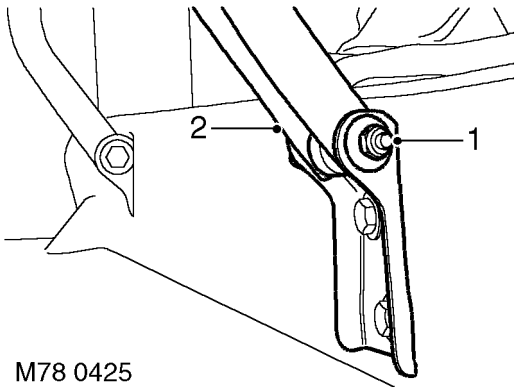

1. Remove bolts securing rear seat to hinges and collect spacer.
2. Remove rear seat.

Refit

3. Position rear seat and align to hinges.
4. Fit spacer and tighten bolts.

COVER - CUSHION - REAR SEAT

Service repair no - 78.40.04

Remove

1. Remove rear seat. ***See this Section.***

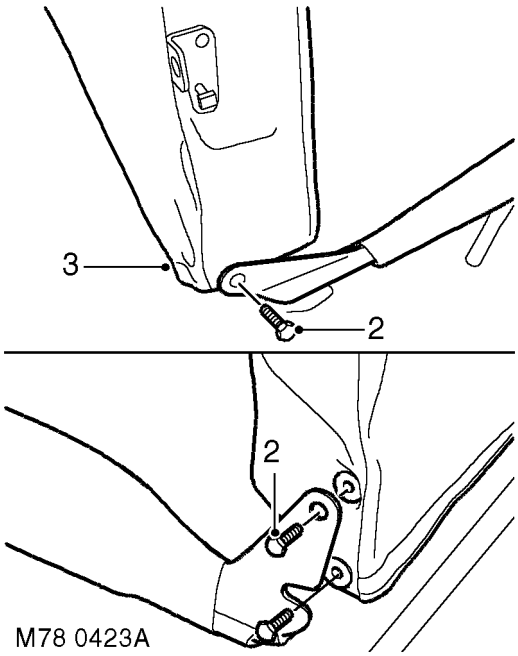

2. Remove 2 bolts securing squab to cushion frame.
3. Remove squab and collect spacer.

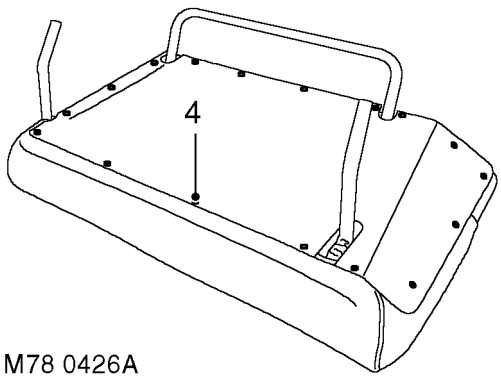

4. Remove 17 screws securing base board to seat cushion frame and remove board.

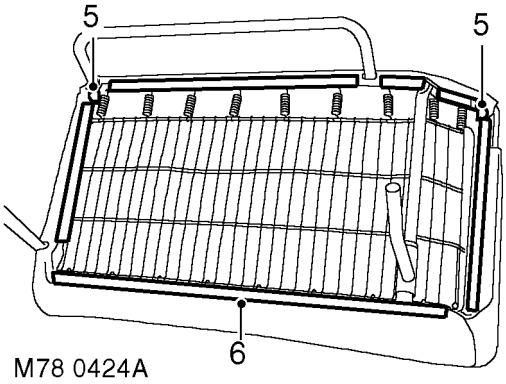

5. Remove 2 trim retaining clips.
6. Release cover retainers from seat frame.
7. Remove cover from cushion pad.

Refit

8. Position cover to cushion pad and secure retainers to seat frame.
9. Fit trim retaining clips.
10. Position base board and tighten screws.
11. Position and align squab to cushion frame.
12. Fit spacer and tighten securing bolts.
13. Fit rear seat. ***See this Section.***

COVER - SQUAB - REAR SEAT

Service repair no - 78.90.13

Remove

1. Remove rear seat. ***See this Section.***

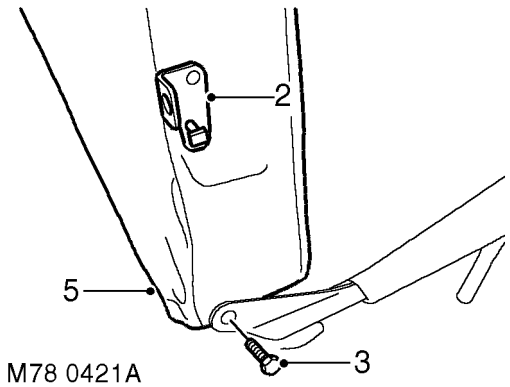

2. Remove 2 screws and remove squab striker.
3. Remove 2 bolts securing squab to cushion frame.
4. Remove squab stop bolt.
5. Remove squab and collect spacer.

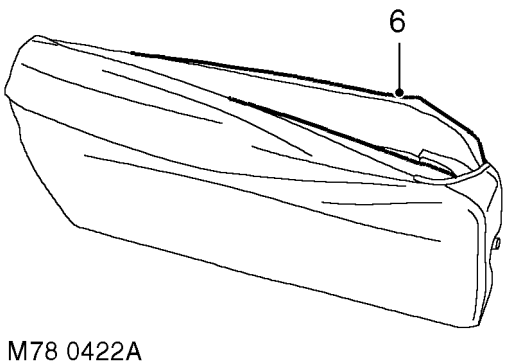

6. Release velcro securing squab cover edges and fold cover over squab pad.
7. Remove squab cover.

Refit

8. Position cover to squab pad, align to its fitted position and secure velcro.
9. Position and align squab to cushion frame.
10. Fit spacer and tighten securing bolts.
11. Fit and tighten squab stop bolt.
12. Fit squab striker and tighten screws.
13. Fit rear seat. ***See this Section.***

REGULATOR - REAR DOOR GLASS

Service repair no - 76.31.46

Remove

1. Remove rear door trim casing. ***See this Section.***
2. Carefully release plastic sheet from rear door.

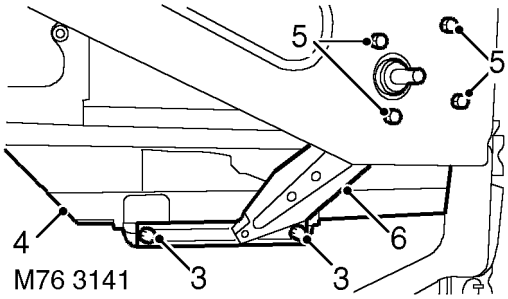

3. Remove 2 bolts securing door glass to regulator.
4. Raise glass and secure with a suitable wedge.
5. Remove 4 bolts securing glass regulator assembly to door.
6. Manoeuvre regulator through access hole at bottom of the door.

Refit

7. Clean mating face of regulator and door glass.
8. Lubricate regulator with grease.
9. Position regulator in door and secure with bolts.
10. Remove wedge holding glass and align glass to regulator.
11. Secure glass to regulator and fit and tighten bolts.
12. Fit plastic sheet to rear door.
13. Fit rear door trim casing. ***See this Section.***

TRIM CASING - REAR DOOR

Service repair no - 76.34.04.99

Remove

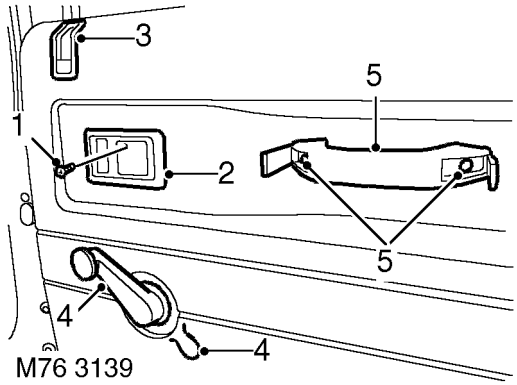

1. Remove screw securing door handle escutcheon.
2. Remove escutcheon.
3. Remove interior lock button bezel.
4. Remove retaining clip and remove door glass regulator handle.
5. Release covers and remove 2 screws securing door pull to door.

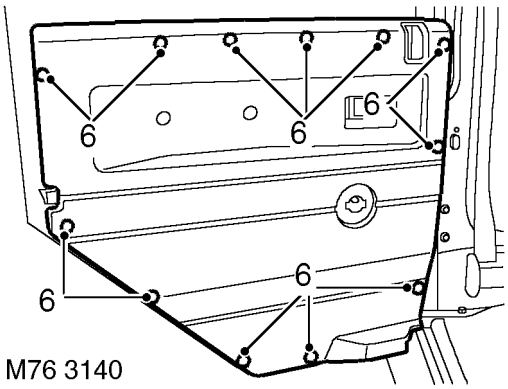

6. Carefully release 12 clips securing trim casing to door and remove door casing.

Refit

7. Fit trim casing to door and secure with clips.
8. Fit door glass regulator handle.
9. Fit escutcheon to door handle and tighten screw.
10. Fit door lock button bezel.
11. Fit door pull and secure with screws.

AUXILLIARY SWITCH PANEL

Service repair no - 76.46.38

Remove

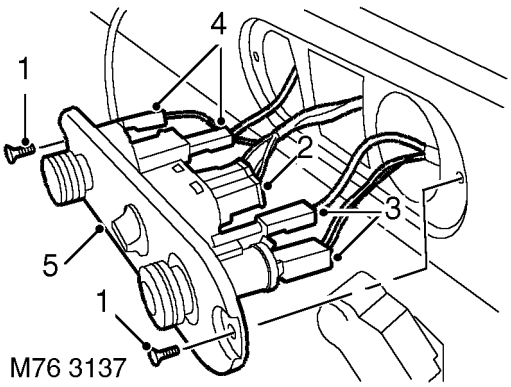

1. Remove 2 screws securing axilliary switch panel to fascia and collect nuts and washers.
2. Disconnect multiplug from headlamp Levelling switch.
3. Disconnect multiplug and Lucar from cigar lighter.
4. Noting their fitted position, disconnect 4 Lucars from rear wash wipe switch.
5. Remove switch panel.

Do not carry out further dismantling if component is removed for access only.

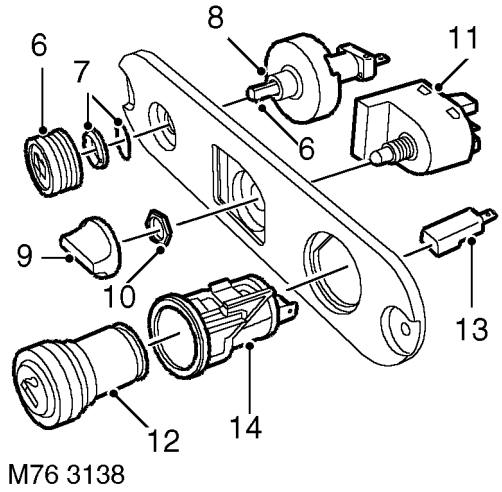

6. Release pin securing rear wash wipe knob to switch and remove knob.
7. Remove locknut securing rear wash wipe switch to panel.
8. Remove rear wash wipe switch.
9. Remove knob from headlamp levelling switch.
10. Remove locknut securing headlamp switch to panel.
11. Remove headlamp levelling switch.
12. Remove element from cigar lighter.
13. Release bulb holder from cigar lighter.
14. Release cigar lighter from tags and remove from panel.
15. Fit cigar lighter to panel and locate tags.
16. Fit bulb holder to cigar lighter.
17. Fit element to cigar lighter.
18. Fit headlamp levelling switch to panel and secure with locknut.
19. Fit knob to headlamp levelling switch.
20. Fit rear wash wipe switch to panel and secure with locknut.
21. Fit knob to rear wash wipe switch, ensuring pin is correctly located.

Refit

22. Position auxilliary switch panel to fascia and connect 4 Lucars to rear wash wipe switch.
23. Connect multiplug and Lucar to cigar lighter.
24. Connect multiplug to headlamp levelling switch.
25. Fit auxilliary switch panel to fascia and secure with screws.

LOWER FASCIA PANEL - UP TO 02MY

Service repair no - 76.46.05

Remove

1. Disconnect battery negative lead.
2. Remove steering wheel. ***See STEERING, Repair.***

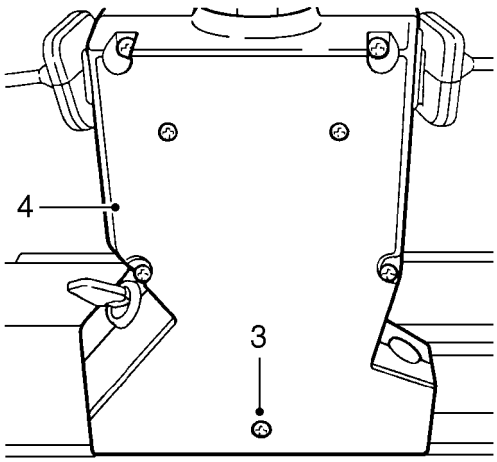

M76 3181

3. Remove 7 screws securing nacelle to steering column.
4. Remove 2 halves of nacelle from steering column.
5. Remove instrument pack. ***See ELECTRICAL, Repair.***

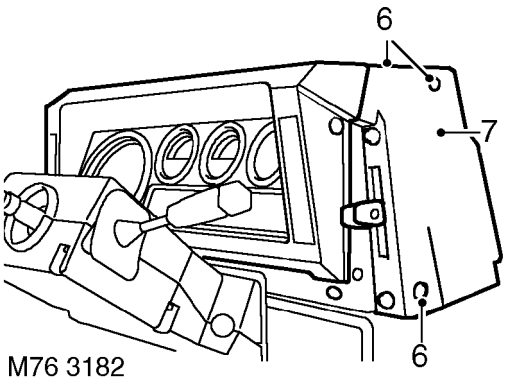

M76 3182

6. Remove 3 screws securing heater control cable assembly to end of fascia.
7. Release heater control cable assembly from fascia and move aside.

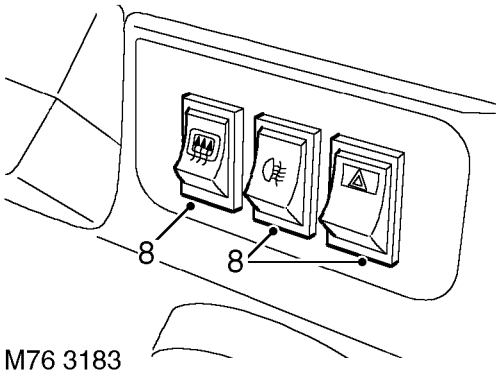

M76 3183

8. Release HRW, Rear Fog Guard Lamp, and Hazard Warning switches from fascia.
9. Disconnect multiplugs and Lucars from switches.
10. Collect switches.

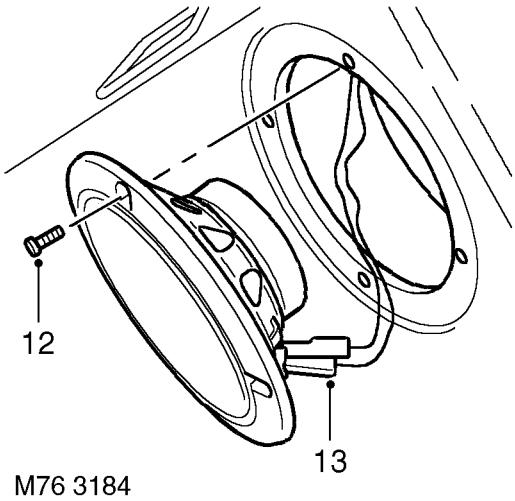

M76 3184

11. Remove locking rings from both front speakers.
12. Remove 4 screws securing each speaker to fascia.
13. Disconnect multiplugs from speakers and remove both front speakers.

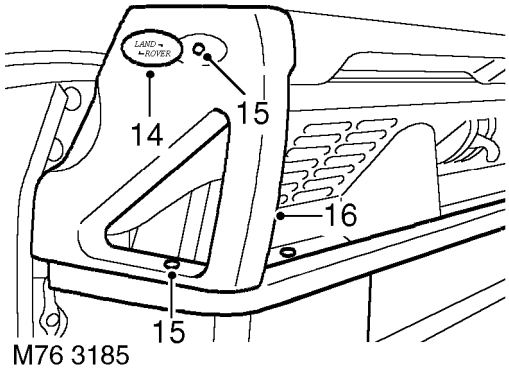

14. Carefully prise Land Rover decal from grab handle.
15. Remove 2 screws securing grab handle to crash pad and lower fascia panel.
16. Remove grab handle.

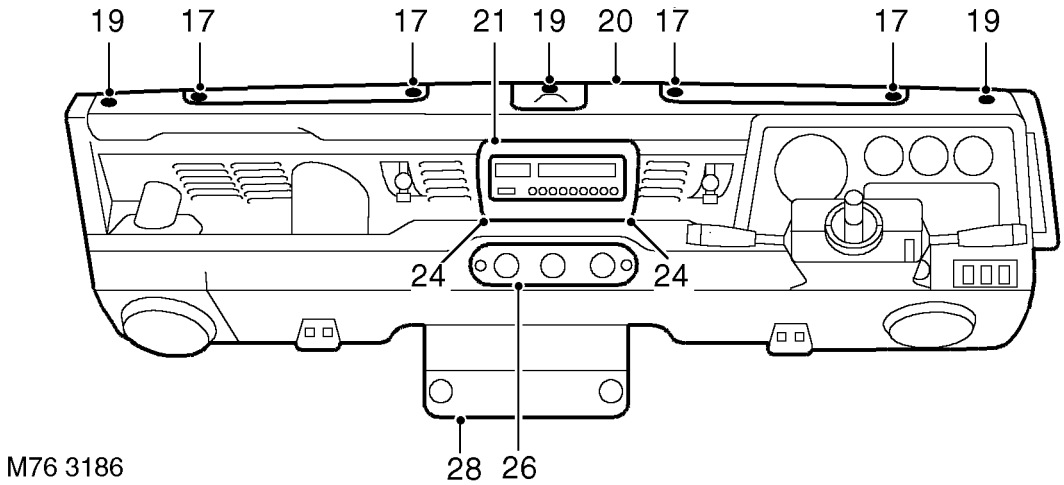

17. Remove 4 screws securing demister vents to crash pad.
18. Remove both demister vents.
19. Remove 3 screws securing crash pad to bulkhead.
20. Remove crash pad.
21. Release radio from fascia.
22. Disconnect 2 multiplugs and aerial from radio.
23. Remove radio.
24. Remove 2 trim studs securing radio housing to fascia.
25. Remove radio housing.
26. Remove auxilliary switch panel. ***See this Section.***
27. Remove auxilliary switch panel cover.
28. Remove interior fuse box cover.

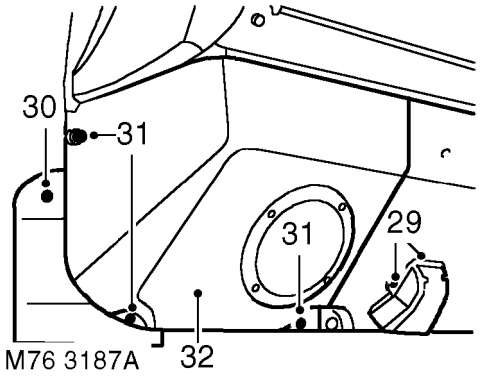

29. Remove 2 screws securing each footwell vent and remove vents from lower fascia.
30. Remove screw securing each door check strap cover and remove both covers.
31. Remove 3 screws securing wiper motor cover to bulkhead.
32. Remove wiper motor cover.

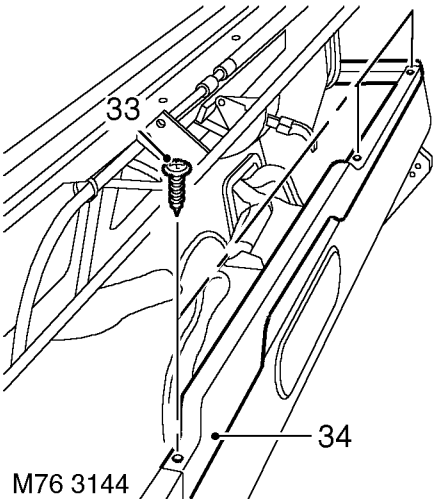

33. Remove 3 screws securing finisher rail to lower fascia.
34. Remove finisher rail.

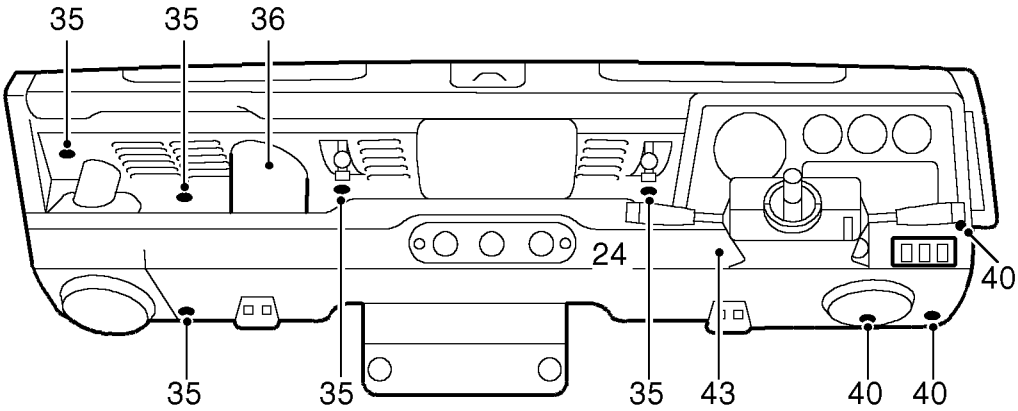

M76 3188

35. Remove 7 trim clips securing trim upper fascia trim casing to bulkhead.
36. Carefully fold back trim casing over fresh air vent operating levers and remove.

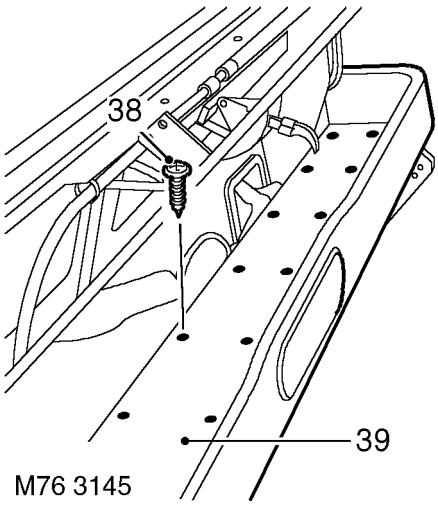

M76 3145

37. Release demist hose from parcel shelf.
38. Remove 18 screws securing parcel shelf to lower fascia panel.
39. Remove parcel shelf.
40. Remove 7 screws securing bottom edge of lower fascia panel to bulkhead.
41. Remove both retaining plates and lower footwell covers.
42. Remove 2 bolts securing top of lower fascia to bulkhead.
43. With assistance, remove lower fascia.

Refit

44. With assistance, fit lower fascia.
45. Fit 2 bolts securing top of lower fascia to bulkhead.
46. Fit both retaining plates and footwell covers to lower fascia.
47. Fit 7 screws securing bottom edge of lower fascia to bulkhead.
48. Fit parcel shelf to lower fascia and secure with screws.
49. Fit demist hose to parcel shelf.
50. Carefully manoeuvre upper fascia trim casing over fresh air vents and fit to fascia.
51. Fit trim clips securing trim casing to bulkhead.
52. Fit finisher rail to lower fascia and secure with screws.
53. Fit wiper motor cover and secure with screws.
54. Fit both door check strap covers and secure with screws.
55. Fit both footwell vents to lower fascia and secure with screws.
56. Fit interior fuse box cover.
57. Fit auxilliary switch panel cover.
58. Fit auxilliary switch panel. ***See this Section.***

59. Fit radio housing to fascia and secure with trim studs.
60. Position radio to fascia and connect multiplugs and aerial.
61. Fit radio to fascia.
62. Fit crash pad to fascia and secure with screws.
63. Fit both demister vents to crash pad and secure with screws.
64. Fit grab handle to fascia and secure with screws.
65. Fit Land Rover decal to grab handle.
66. Position both front speakers to fascia and connect multiplugs.
67. Fit speakers to fascia and secure with screws.
68. Fit locking rings to speakers.
69. Connect multiplugs and Lucars to HRW, Rear Fog Guard Lamp, and Hazard Warning Switches.
70. Fit switches to fascia.
71. Position heater controls to fascia and secure with screws.
72. Fit instrument pack. ***See ELECTRICAL, Repair.***
73. Fit 2 halves of nacelle to steering column and secure with screws.
74. Fit steering wheel. ***See STEERING, Repair.***
75. Reconnect battery negative lead.

PANEL - MOUNTING - FRONT DOOR - FROM 02MY

Service repair no - 76.11.28

Remove

1. Remove plastic sheet. ***See this Section.***

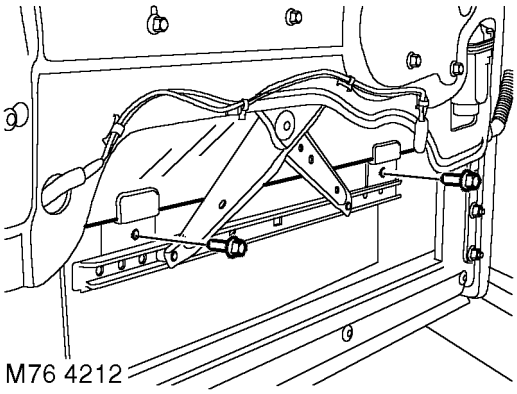

2. Lower glass and remove 2 bolts securing door glass to regulator.

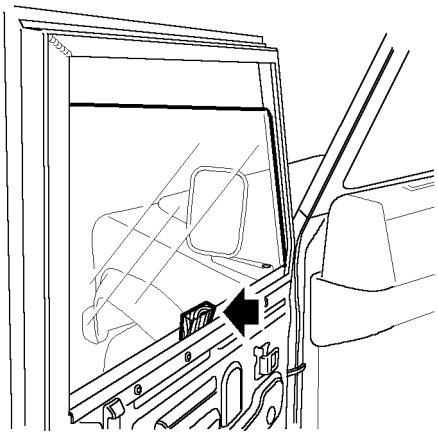

3. Release glass from regulator, raise and wedge in raised position.

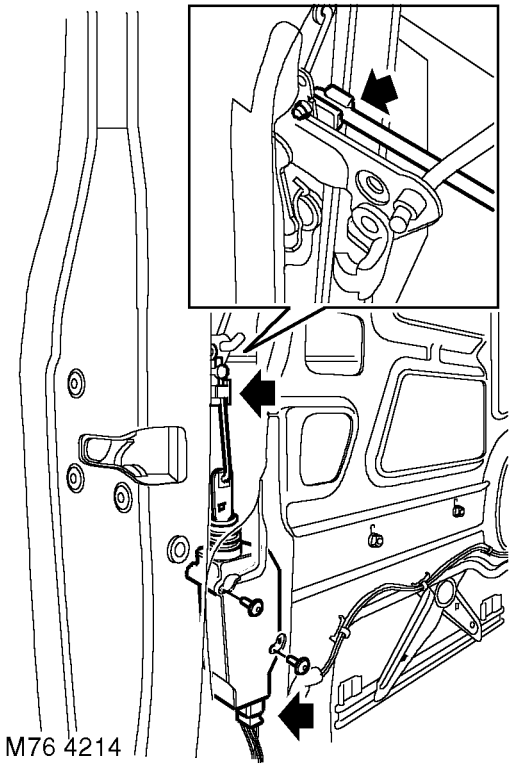
M76 4214

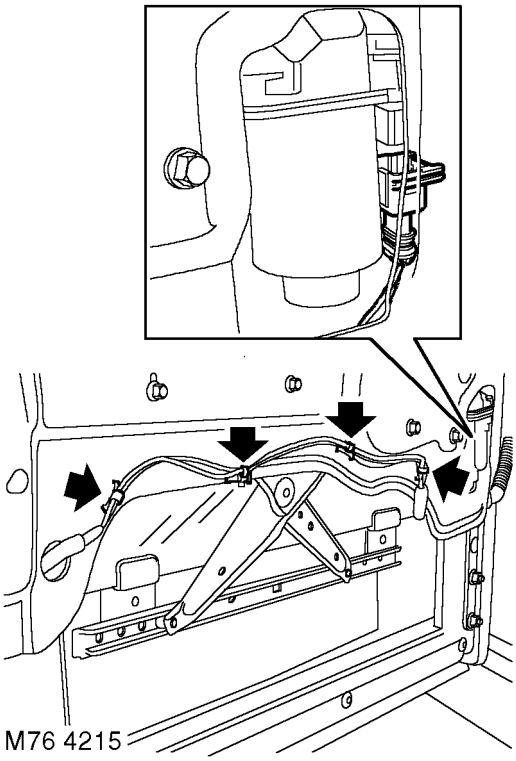
M76 4215

4. Release clip, detach and remove lock solenoid link.
5. Loosen 2 screws securing solenoid, release solenoid from mounting panel, disconnect multiplug and remove solenoid.
6. Release clip and disconnect interior handle link from latch mechanism.
7. Release clips securing harness to panel.
8. Disconnect multiplug from motor.
9. Release harness sleeve and withdraw harness from door.

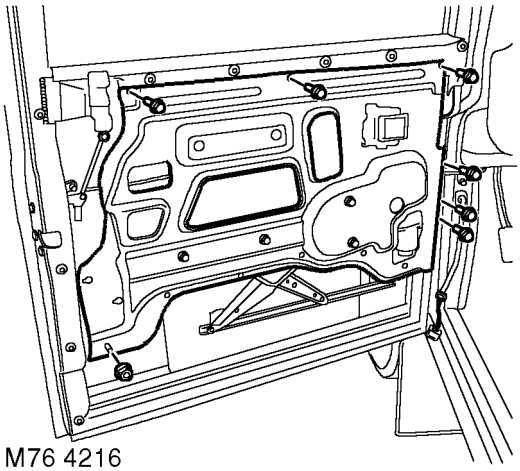
M76 4216

10. Remove 6 bolts and 1 nut securing panel.
11. Remove panel assembly.

Refit

12. Position panel assembly, fit bolts and nut and tighten to ***10 Nm (7lbf.ft).***
13. Connect multiplug to motor.
14. Secure harness clips and sleeve.
15. Connect interior handle link to latch and secure with clip.
16. Connect multiplug to solenoid, locate solenoid to mounting panel and tighten screws.
17. Fit and secure link.
18. Remove wedges, lower glass and locate to regulator. Fit bolts and tighten to ***6 Nm (4 lbf.ft).***
19. Raise and lower glass to check operation.
20. Fit plastic sheet. ***See this Section.***
21. Adjust door lock solenoid. ***See ELECTRICAL, Adjustment.***

PANEL - MOUNTING - REAR DOOR - FROM 02MY

Service repair no - 76.11.29

Remove

1. Remove plastic sheet. ***See this Section.***

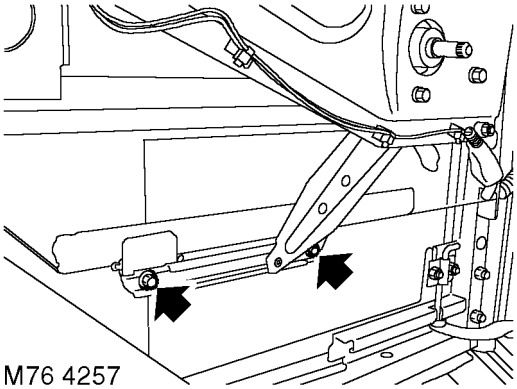
M76 4257

2. Lower glass and remove 2 bolts securing door glass to regulator.

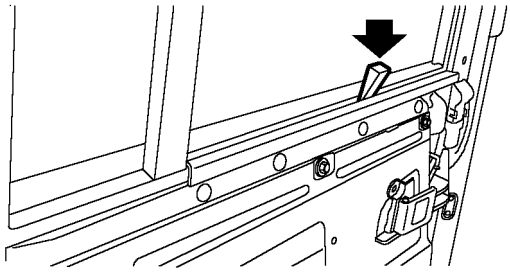
M76 4258

3. Release glass from regulator, raise and wedge in raised position.

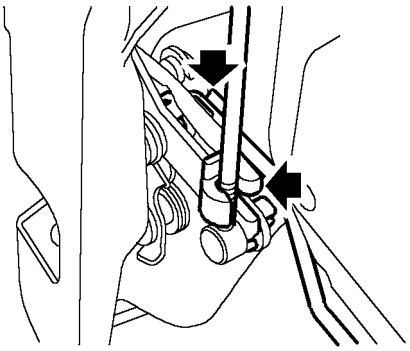

M76 4259

4. Release clip, detach and remove lock solenoid link.
5. Release clip and disconnect interior handle link from latch mechanism.

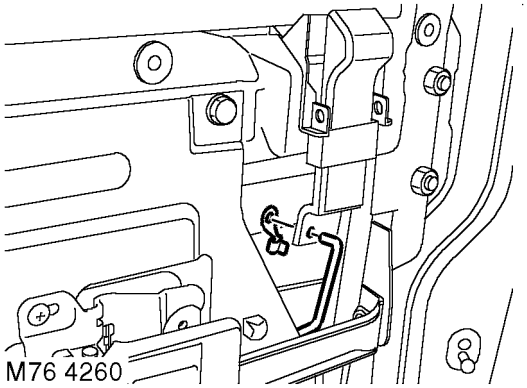

M76 4260

6. Remove clip and disconnect sill button link.

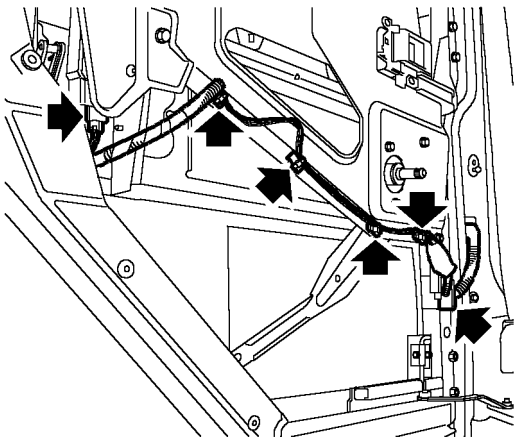

M76 4261

7. Release clips securing harness to panel.
8. Disconnect multiplug from solenoid.
9. Release harness sleeve and withdraw harness from door.

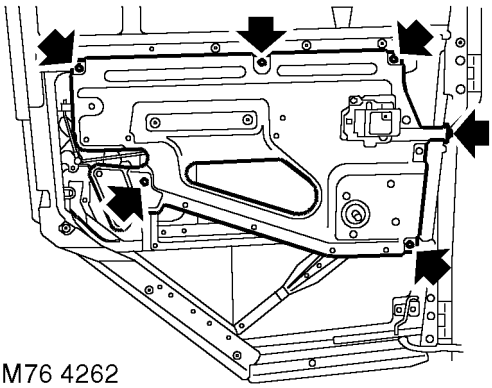

M76 4262

10. Remove 5 bolts and 1 nut securing panel.
11. Remove panel assembly.

Refit

12. Position door mounting panel assembly, fit bolts and nut and tighten to ***10 Nm (7lbf.ft).***
13. Connect multiplug to solenoid.
14. Secure harness clips and sleeve.
15. Connect interior handle link to latch and secure with clip.
16. Connect link to sill button and fit clip.
17. Fit and secure solenoid link.
18. Remove wedges, lower glass and locate to regulator. Fit bolts and tighten to ***6 Nm (4 lbf.ft).***
19. Raise and lower glass to check operation.
20. Fit plastic sheet. ***See this Section.***

FACIA CONSOLE - FROM 02MY

Service repair no - 76.25.03

Remove

1. Disconnect battery earth lead. ***See ELECTRICAL, Repair.***
2. Remove radio. ***See ELECTRICAL, Repair.***

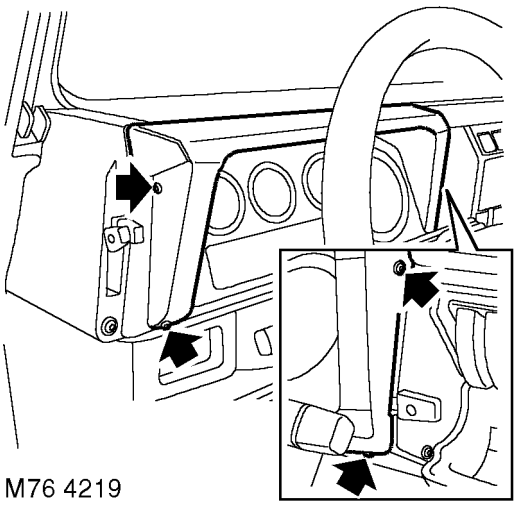

M76 4219

3. Remove 4 screws securing instrument pack and release pack from fascia.

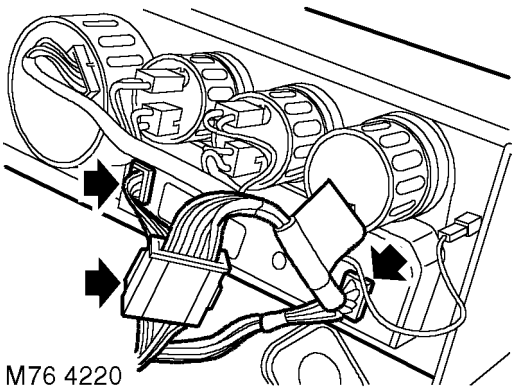

M76 4220

4. Disconnect 2 multiplugs from warning lamp panel.
5. Disconnect instrument pack multiplug from main harness.
6. Remove instrument pack.

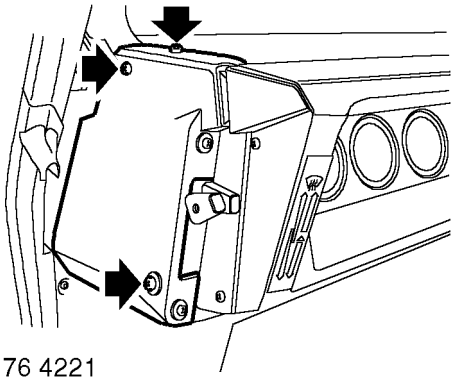

M76 4221

7. Remove 3 screws securing heater control and release control from fascia.

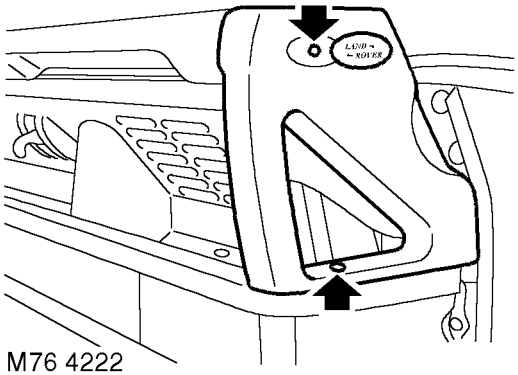

M76 4222

8. Carefully prise Land Rover decal from grab handle.
9. Remove 2 screws securing grab handle and remove handle.

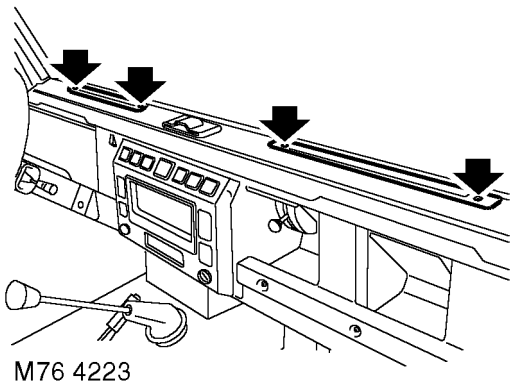

M76 4223

10. Remove 4 screws and remove demister vents.

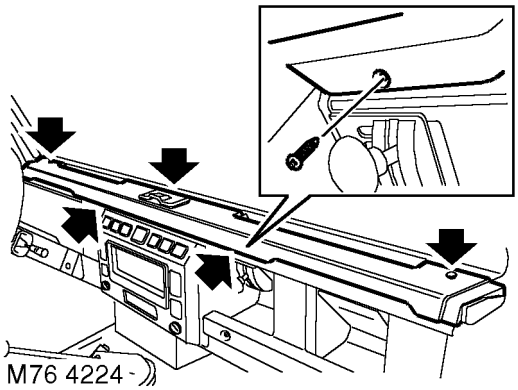
M76 4224

11. Remove 5 screws securing crash pad and remove pad.

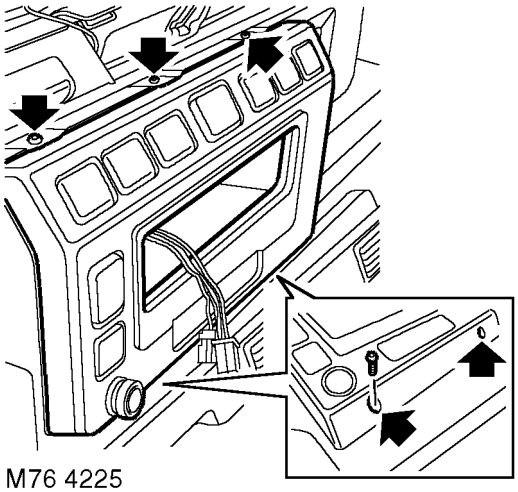
M76 4225

12. Remove 5 screws and release fascia console.

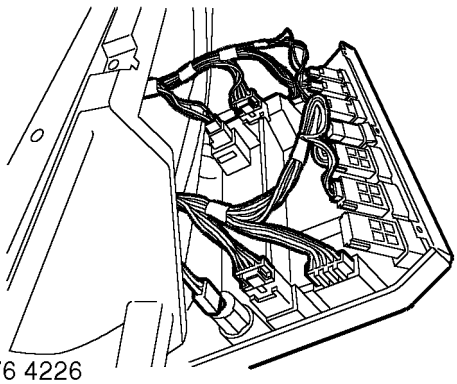
M76 4226

13. Disconnect Lucar connection and multiplug from cigar lighter.
14. Disconnect multiplugs from remaining switches and remove console.

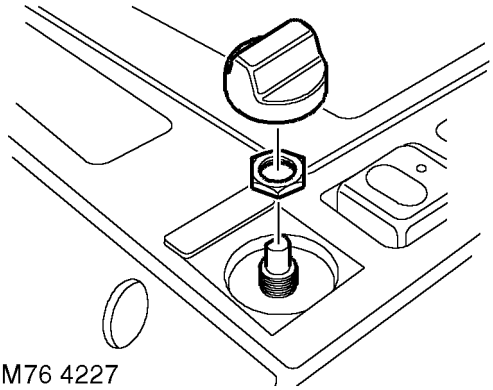
M76 4227

15. Remove operating knob from light switch.
16. Remove nut securing light switch and remove switch from console.

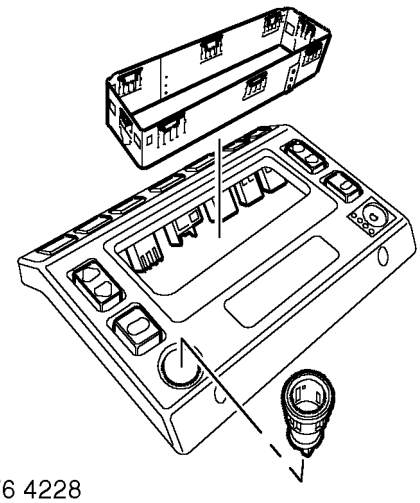
M76 4228

17. Release cigar lighter body and remove from console.
18. Remove switches from console.
19. Release tabs and remove radio mounting bracket.

Refit

20. Fit radio bracket and secure with tabs.
21. Fit and secure cigar lighter body to console.
22. Fit light switch and secure with nut.
23. Fit operating knob to switch.
24. Fit remaining switches to console.

25. Position console and connect Lucar and multiplug to cigar lighter.
26. Connect multiplugs to remaining switches.
27. Fit console and secure with screws.
28. Fit crash pad and secure with screws.
29. Fit demister vents and secure with screws.
30. Fit grab handle, secure with screws and fit Land Rover decal.
31. Fit heater control to fascia and secure with screws.
32. Position instrument pack and connect multiplugs.
33. Fit instrument pack to fascia and secure with screws.
34. Fit radio. ***See ELECTRICAL, Repair.***
35. Connect battery earth lead. ***See ELECTRICAL, Repair.***

GLASS - REAR DOOR - FROM 02MY

Service repair no - 76.31.02

Remove

1. Remove rear door mounting panel. ***See this Section.***

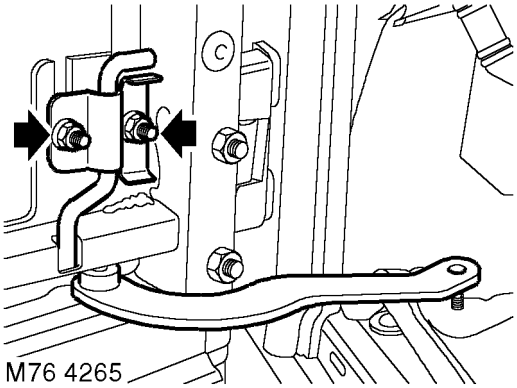

2. Loosen 2 nuts and remove door check strap torsion bar and plate.
3. Remove check strap.

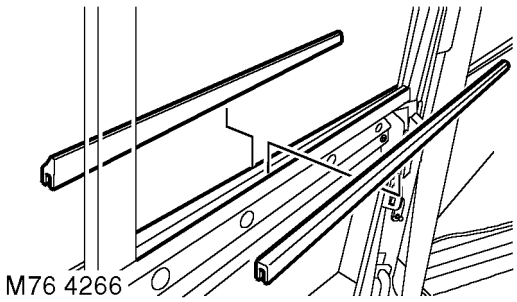

4. Remove inner and outer waist seal.

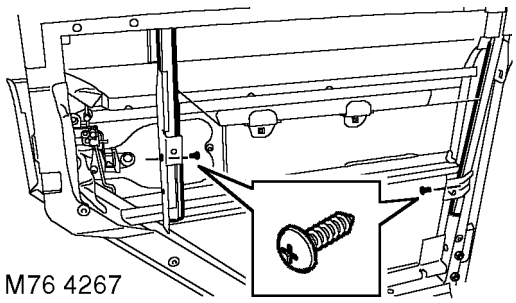

5. Remove screw from each glass channel.
6. Lower glass to bottom of door, lift over lower edge and withdraw from door.

Refit

7. Insert glass into channels and carefully push to top of frame.
8. Secure glass channels with screws. Ensure screw heads are down below bottom of channels to prevent damage to glass.
9. Fit inner and outer waist seal to door.
10. Fit check strap.
11. Fit check strap torsion bar and tighten nuts to ***10 Nm (7 lbf.ft)*** .
12. Fit rear door mounting panel. ***See this Section.***

GLASS/SEALING RUBBER - TAIL DOOR - FROM 02MY

Service repair no - 76.31.22

Remove

1. Remove spare wheel from tail door.

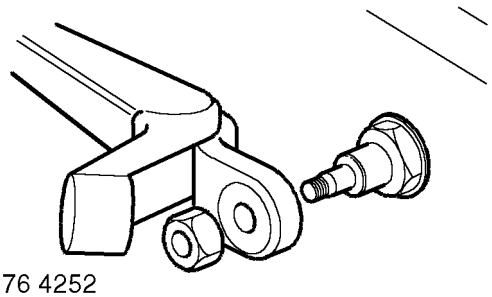

M76 4252

2. Raise nut cover, remove nut and release wiper arm.
3. Open rear door.
4. Remove CHMSL assembly. ***See ELECTRICAL, Repair.***

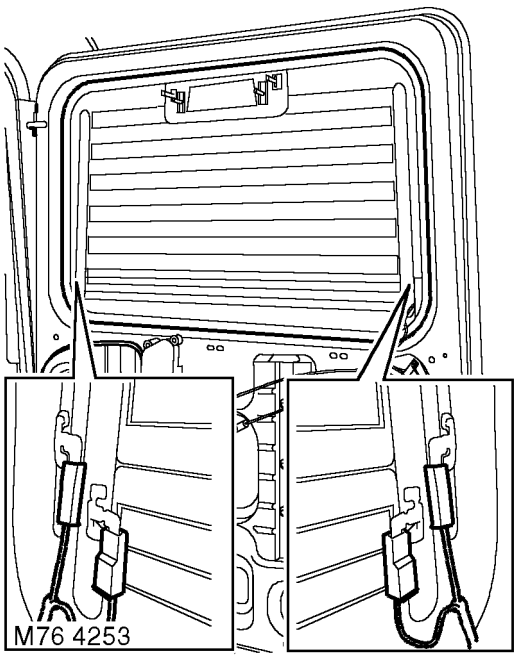

M76 4253

5. Disconnect 4 Lucar connections.
6. With assistance, from inside of vehicle apply pressure to glass, relieve seal lip and carefully remove glass.

WARNING: Wear suitable eye protection when removing and refitting glass.

7. Remove seal from glass.

CAUTION: Lay glass on felt covered supports and be careful not to damage the obscuration band. Do not stand on edge as this can cause chips which subsequently develop into cracks.

Refit

8. Clean glass and fit seal. Ensure seal is fully located on glass.
9. Thoroughly clean the tail door glass mounting flange.
10. Fit drawstring to seal.
11. Lubricate seal.
12. With assistance, position glass and seal to aperture, locate lower edge and fit seal using drawstring.
13. Clean glass and check seal fit.
14. Connect Lucars to heated rear screen.
15. Fit CHMSL assembly. ***See ELECTRICAL, Repair.***
16. Fit wiper arm to spindle, align blade to glass and tighten nut to ***18 Nm (13 lbf.ft).***
17. Fit spare wheel and tighten nuts to ***45 Nm (33 lbf.ft).***

TRIM CASING - FRONT DOOR - FROM 02MY

Service repair no - 76.34.01

Remove

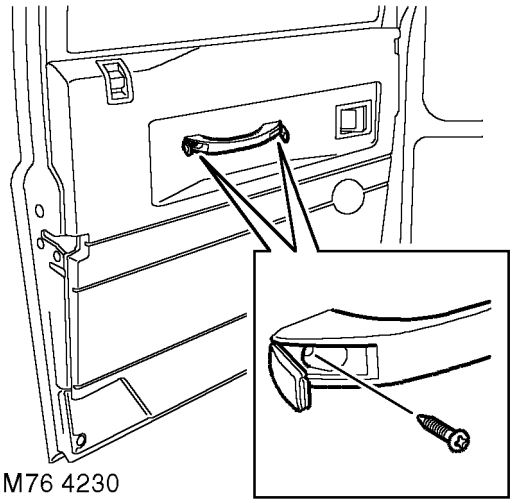
M76 4230

1. Remove 2 screws securing door pull and remove door pull.

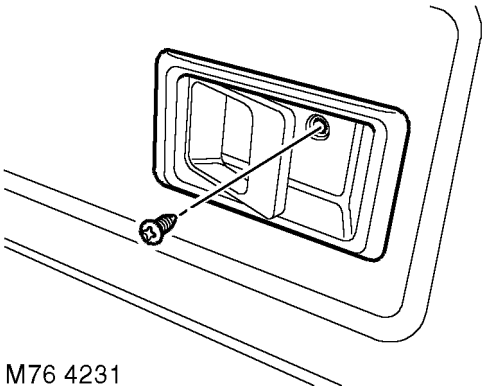
M76 4231

2. Remove screw securing door release escutcheon and remove escutcheon.

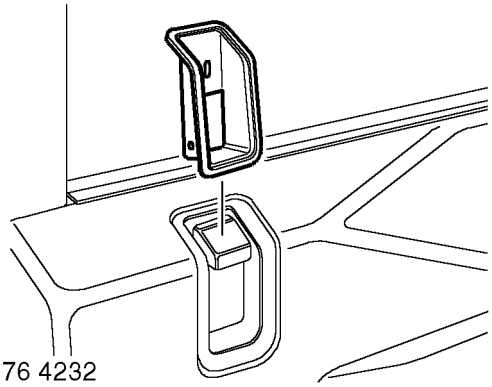
M76 4232

3. Remove sill button guide.

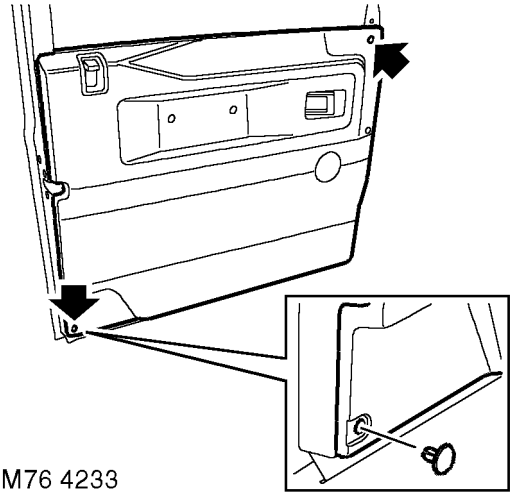
M76 4233

4. Remove 2 studs securing trim casing.
5. Using a trim removal tool, release 11 fasteners and remove trim casing.

NOTE: Do not carry out further dismantling if component is removed for access only.

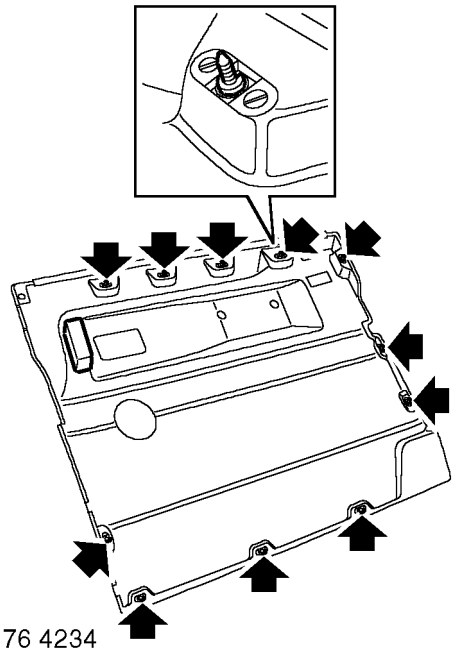
M76 4234

6. Remove fasteners and anti-vibration pad from trim casing

Refit

7. Fit anti-vibration pad and fasteners to trim casing.
8. Position trim casing, align fasteners with holes in door and press firmly into position.
9. Fit trim studs to casing.
10. Fit sill button guide.
11. Fit escutcheon to door handle and secure with screw.
12. Fit door pull and secure with screws.

TRIM CASING - TAIL DOOR - FROM 02MY

Service repair no - 76.34.09

Remove

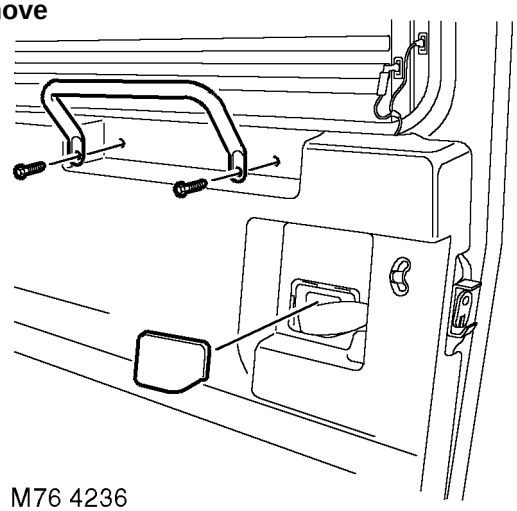

M76 4236

1. Remove 2 bolts securing rear door grab handle, remove handle.
2. Remove escutcheon.

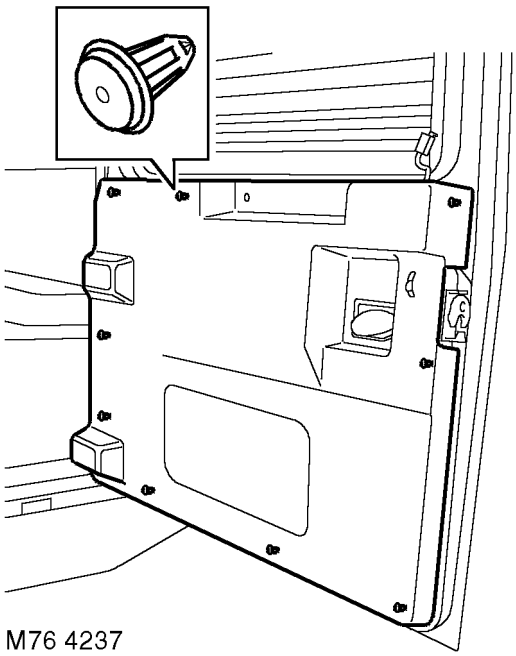

M76 4237

3. Carefully release 9 fasteners securing trim casing to rear door and remove casing.

NOTE: Do not carry out further dismantling if component is removed for access only.

4. Remove 9 fasteners from trim pad.

Refit

5. Fit fasteners to trim casing.
6. Position trim casing and secure fasteners.
7. Fit escutcheon.
8. Fit grab handle and tighten bolts to ***10 Nm (7 lbf.ft).***

PLASTIC SHEET - FRONT DOOR - FROM 02MY

Service repair no - 76.34.26

Remove

1. Remove front door trim casing. ***See this Section.***

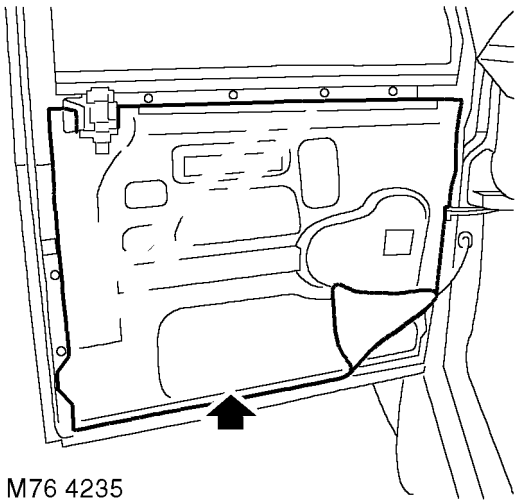

M76 4235

2. Release and discard plastic sheet.

Refit

3. Clean door contact area with white spirit.
4. Apply adhesive sealing strip to plastic sheet.
5. Position new plastic sheet to door and seal in position, by applying hand pressure to centre bottom of sheet first then move out from this point in both directions applying an even pressure to the seal, smooth out any creases.
6. Fit front door trim casing. ***See this Section.***

PLASTIC SHEET - REAR DOOR - FROM 02MY

Service repair no - 76.34.28

Remove

1. Remove rear door trim casing. ***See this Section.***

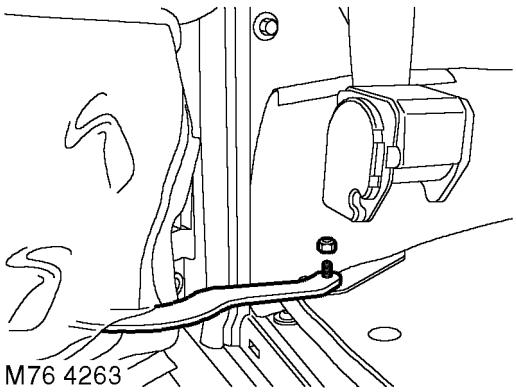

M76 4263

2. Remove nut and disconnect check strap.

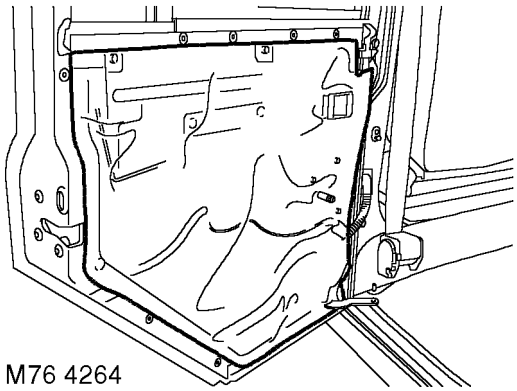

M76 4264

3. Release and discard plastic sheet.

Refit

4. Clean door contact area with white spirit.
5. Apply adhesive sealing strip to plastic sheet.
6. Position new plastic sheet to door and seal in position, by applying hand pressure to centre bottom of sheet first then move out from this point in both directions applying an even pressure to the seal, smooth out any creases.
7. Connect check strap, fit nut and tighten sufficiently to allow check strap to pivot without rattling.
8. Fit rear door trim casing. ***See this Section.***

LOCK - TAIL DOOR - FROM 02MY

Service repair no - 76.37.16

Remove

1. Remove tail door trim casing. ***See this Section.***

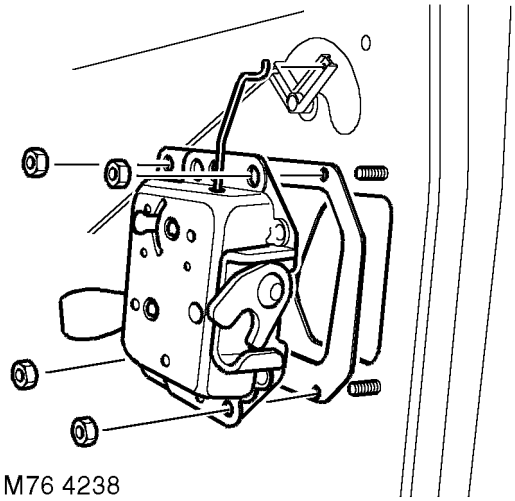

M76 4238

2. Remove 4 nuts securing tail door lock.
3. Partially withdraw lock assembly, carefully disconnect central door locking rod from fulcrum arm.
4. Remove lock assembly.
5. Remove door lock gasket.

NOTE: Do not carry out further dismantling if component is removed for access only.

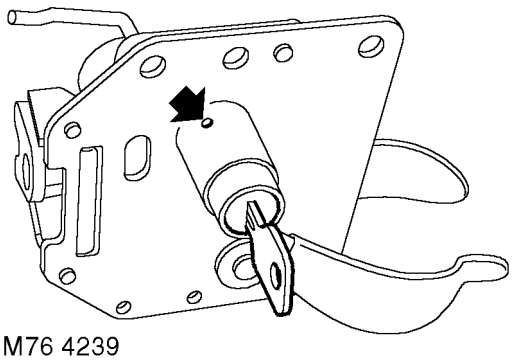

M76 4239

6. Insert key in lock, depress lock barrel plunger and withdraw barrel from lock.

Refit

7. Fit new barrel to lock.
8. Fit new door lock gasket.
9. Fit door locking rod to fulcrum, align lock. Fit and tighten nuts to ***10 Nm (7 lbf.ft).***
10. Close door and check for correct latching with striker. Adjust striker if necessary. ***See Adjustment.***
11. Fit tail door trim casing. ***See this Section.***

LOWER FASCIA PANEL - FROM 02MY

Service repair no - 76.46.05
Service repair no - 80.10.12

NOTE: This procedure also covers removal of the air distribution control cable, 80.10.12.

Remove

1. Disconnect battery negative lead. ***See ELECTRICAL, Repair.***
2. Remove steering column nacelle. ***See STEERING, Repair.***
3. Remove fascia console. ***See this Section.***

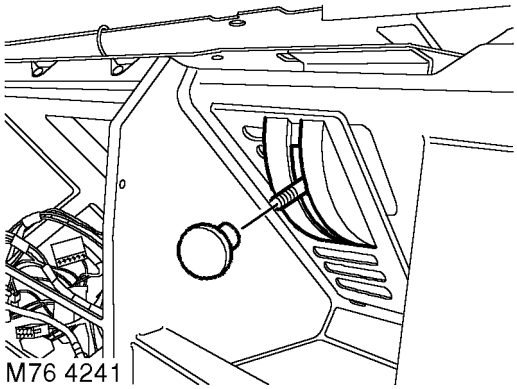
M76 4241

4. Remove air vent control knobs.

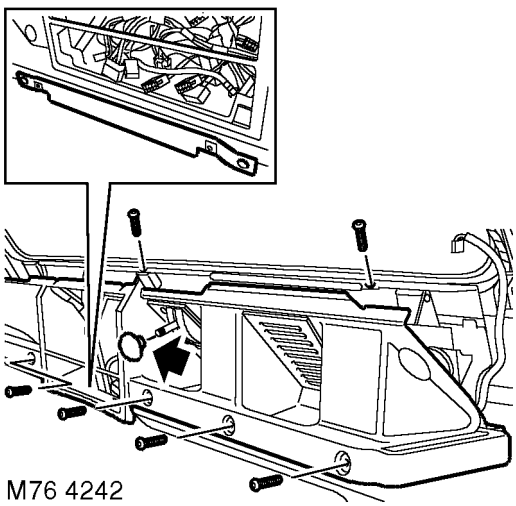
M76 4242

5. Remove 6 screws, remove fascia closing panel and collect nut plate.
6. Remove speakers. ***See ELECTRICAL, Repair.***

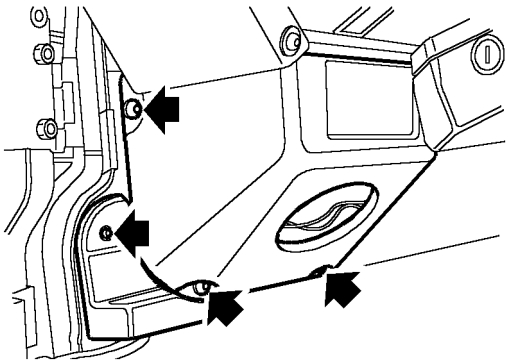
M76 4243

7. Remove 2 screws and remove both door check strap covers.
8. Remove 3 screws and remove end cap from lower fascia panel.

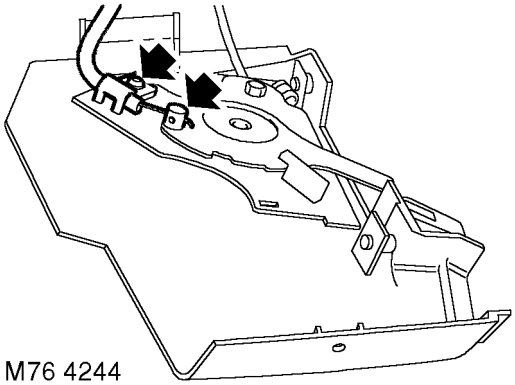
M76 4244

9. Loosen grub screw and clamp plate bolt securing air distribution cable. Release cable from control lever.

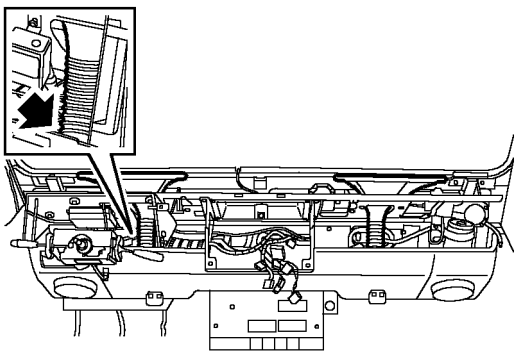
M76 4245

10. Release screen demister tubes from lower fascia panel.

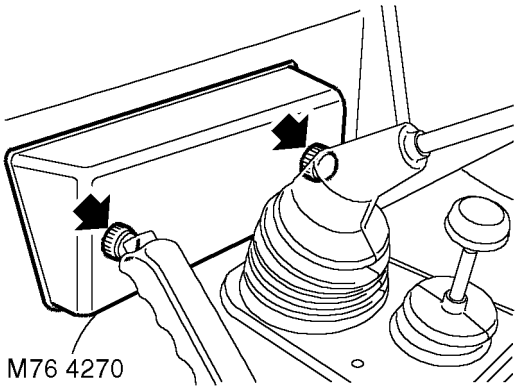

11. Remove 2 screws securing fuse cover and remove cover.

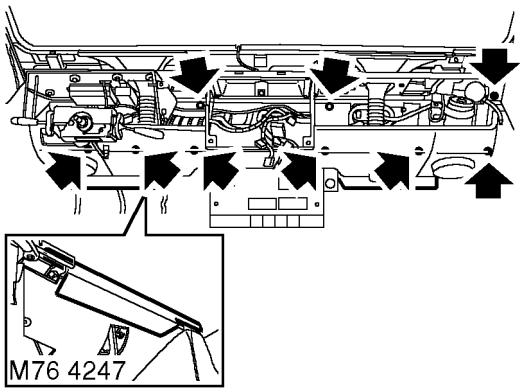

12. Remove 7 screws securing lower edge of fascia panel.
13. Remove footwell cover retaining plates.
14. Remove 2 nuts and remove lower fascia panel.

NOTE: Do not carry out further dismantling if component is removed for access only.

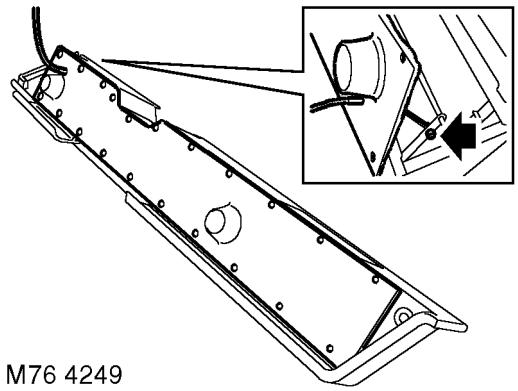

15. Remove 21 screws and release air duct cover.
16. Loosen trunnion screw, remove air distribution cable and duct cover.

Refit

17. Fit air distribution cable to duct cover and fit inner cable to vent flap trunnion.
18. Tighten vent flap trunnion screw to ***6 Nm (4 lbf.ft)*** and bend cable end to secure.
19. Fit duct cover to lower fascia and fit and tighten screws.
20. Check condition of seal between heater and lower fascia, if damaged replace.
21. Carefully fit lower fascia panel and ensure harness route is correct.
22. Secure lower fascia panel with screws and tighten nuts to ***10 Nm (7 lbf.ft).***
23. Fit fuse cover and secure with screws.
24. Connect demister tubes to lower fascia panel.
25. Raise air distribution lever to screen demist position and close footwell vent.
26. Connect air distribution cable to lever, tighten grub screw and outer cable clamp.
27. Fit end cap to fascia and secure with screws.
28. Fit check strap covers and secure with screws.
29. Fit speakers. ***See ELECTRICAL, Repair.***
30. Fit fascia closing panel.
31. Fit nut plate and fit screws to secure nut plate and closing panel.
32. Fit knobs to air vent control levers.
33. Fit fascia console. ***See this Section.***
34. Fit steering column nacelle. ***See STEERING, Repair.***
35. Connect battery negative lead. ***See ELECTRICAL, Repair.***

77 - PANEL REPAIRS

CONTENTS

Page

INFORMATION

BODY REPAIRS 1
ELECTRONIC CONTROL UNITS (ECU's) 3

BODY DIMENSIONS

CHASSIS AND BODY 1
CHASSIS FRAME ALIGNMENT 2
GAP AND PROFILE INFORMATION 9

SEALING AND CORROSION PROTECTION

APPROVED MATERIALS 1
APPLICATION EQUIPMENT 4
CORROSION PROTECTION 8
CAVITY WAX 12
SEALANTS AND ADHESIVES 17
WATER LEAKS 28

PANELS

SERVICEABLE PANELS 1

PROCEDURES

GENERAL WELDING PRECAUTIONS 1
PANEL REPLACEMENT PROCEDURE 2
REPAIR PROCEDURES 6

REPAIR

WING LOWER FRONT 1
HEADLAMP MOUNTING PANEL 1
WING UPPER - LH 2
WING UPPER - RH 2
WHEEL ARCH - FRONT 3
BULKHEAD ASSEMBLY 3
SCREEN APERTURE 4
SILL - FRONT 5
'B/C' & 'D' POST 5
CORNER CAPPING 6
BODY SIDE CAPPING 6

77 - PANEL REPAIRS

CONTENTS

Page

BODY SIDE REAR - UPPER 6
BODY SIDE REAR - LOWER - ASSEMBLY 7
BODY SIDE REAR - PANEL 8
REAR LAMP PANEL 9
REAR CROSSMEMBER PANEL 9
ROOF ASSEMBLY 10
TIME SCHEDULES 11

PAINT

PAINT PROCEDURES 1

BODY REPAIRS

Body shells are of riveted, bolted and welded construction and are bolted to the chassis frame.

It is essential that design dimensions and strength are restored in accident rectification. It is important that neither structural weakness nor excessive local stiffness are introduced into the vehicle during body or chassis repair.

Repairs usually involve a combination of operations ranging from straightening procedures to renewal of either individual panels or panel assemblies. The repairer will determine the repair method and this decision will take into account a balance of economics between labour and material costs and the availability of repair facilities in both equipment and skills. It may also involve considerations of vehicles down-time, replacement vehicle availability and repair turn-around time.

It is expected that a repairer will select the best and most economic repair method possible, making use of the facilities available. The instructions given are intended to assist a skilled body repairer by expanding approved procedures for panel replacement with the objective of restoring the vehicle to a safe running condition and effecting a repair which is visually acceptable and which, even to the experienced eye, does not advertise the fact that it has been damaged.

This does not necessarily mean that the repaired vehicle will be identical in all respects with original factory build. Repair facilities cannot always duplicate methods of construction used during production.

The panel repairs shown in this section are all based on a 110 Station Wagon. Therefore all illustrations and text relate only to this model. Although certain areas of the vehicle, such as the front end, are relevant to all models.

Operations covered in this Manual do not include reference to testing the vehicle after repair. It is essential that work is inspected and suspension geometry checked after completion and if necessary a road test of the vehicle is carried out, particularly where safety related items are concerned.

Where major units have been disconnected or removed, it is necessary to ensure that fluid levels are checked and topped up when necessary. It is also necessary to ensure that the repaired vehicle is in a roadworthy condition in respect of tyre pressures, lights, washer fluid etc.

Body repairs often involve the removal of mechanical and electrical units as well as associated wiring. Where this is necessary use the relevant section in this manual.

Taking into consideration the differences in body styles, steering and suspension systems as well as engine and suspension layouts, the location of the following components as applicable to a particular vehicle is critical:

- Front suspension upper damper mountings.
- Front suspension or sub frame mountings.
- Engine mountings on RH and LH chassis longitudinals.
- Rear suspension upper damper mountings.
- Rear suspension mountings or lower pivots.
- Steering rack mountings.

Additional points which can be used to check alignment and assembly are:

- Inner holes in crossmember - side - main floor.
- Holes in valance front assembly.
- Body to chassis mounting holes.
- Holes in rear floor.
- Holes in rear lower panels or extension rear floor.
- Fuel tank mountings.

Apertures for windscreen, backlight, bonnet and doors can be checked by offering up an undamaged component as a gauge and also by measuring known dimensions. **See BODY DIMENSIONS section.**

Straightening

Whenever possible, chassis structural members should be cold straightened under tension. Do not attempt to straighten with a single pull, but rework the damaged area using a series of pulls, releasing tension between each stage and using the opportunity to check alignment.

Body jig

Unless damage is limited to cosmetic panels, all repair work to body members must be carried out on a body jig, to ensure that impact damage has not spread into more remote parts of the body structure. Mounting on a jig will also ensure that the straightening and panel replacement procedures do not cause further distortion. If original dimensions cannot be satisfactorily restored by these methods, damaged structural members should be replaced. Damaged areas should be cut away using a high speed saw, NOT an oxy-acetylene torch.

As a rule, body dimensions are symmetrical about the centre line. A good initial check for distortion is therefore to measure diagonally and to investigate apparent differences in dimensions.

Inspection

Every accident produces individual differences in damage. Each repair is influenced by the extent of the damage and by the facilities and equipment available for its rectification.

Most accident damage can be visually inspected and the approximate extent of the damage assessed. Sometimes deformation will extend beyond the area of direct damage, and the severity of this must be accurately established so that steps may be taken to restore critical body components to their original dimensions.

An initial check of critical dimensions can be carried out by means of drop checks or (preferably) trammels. Gauges are available which will check accurately for body twist. Where repairs necessitate renewal of a critical body component it is recommended that a body jig is used.

ELECTRONIC CONTROL UNITS (ECU's)

The ECU's fitted to Defender vehicles make it advisable to follow suitable precautions prior to carrying out welding repair operations. All ECU's must be diconnected before any welding operations take place. Harsh conditions of heat and vibration may be generated during these operations which could cause damage to the units. **See ELECTRICAL PRECAUTIONS section.**

CHASSIS AND BODY

Chassis

The chassis on all Defender variants are of the box section, ladder type construction, manufactured from 2 mm (14swg) steel and treated with zinc phosphate, cathodic electro coated, followed by waxing in the rear crossmember.

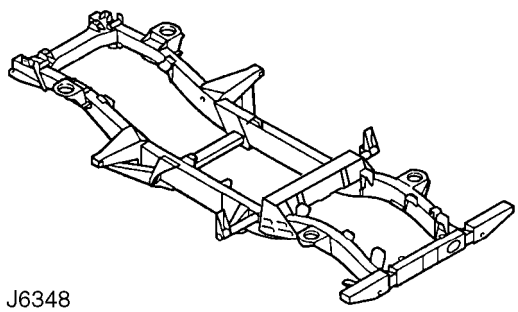

J6348

Outriggers and angled brackets welded to the chassis support suspension and axle components and are also used as body mounting points. A detachable box section crossmember, located between the two chassis longitudinals is fitted to facilitate main gearbox and tranfer box assembly removal.

Should chassis damage occur, a comprehensive range of components are available, including body support outriggers, cross members and radius arm mounting brackets. ALWAYS fit genuine parts that are fully guaranteed and to original equipment specification, fitted with Land Rover's BS 5135 welding standard.

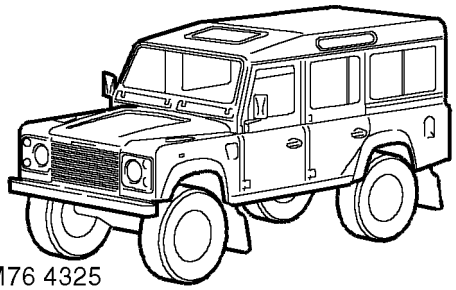

M76 4325

Body

All body panels, with the exception of the fascia bulkhead, are manufactured from aluminium alloy. Galvanized steel is used for the front wheel arches to give optimum protection. Most panels are also treated with zinc phosphate and cathodic electro coated with polyester surfacer, and are bolted to the welded chassis.

CHASSIS FRAME ALIGNMENT

With the vehicle assembled, a check for chassis squareness can be made as follows:

1. Place the vehicle on a level floor.
2. Mark measuring points at approximately the locations shown in LR4412M ensuring that the marks are exactly opposite on each side of the chassis frame.
3. Hold a plumb line against each of the measuring points in turn and mark the floor directly beneath the plumb-bob.
4. Move the vehicle and measure diagonally between the marks made on the floor, if the chassis is square the diagonals between the related measuring points should be within 9,50 mm.
5. Chassis frame dimensional checks can be made, with the vehicle upper structure removed, referring to the applicable illustration and associated key.

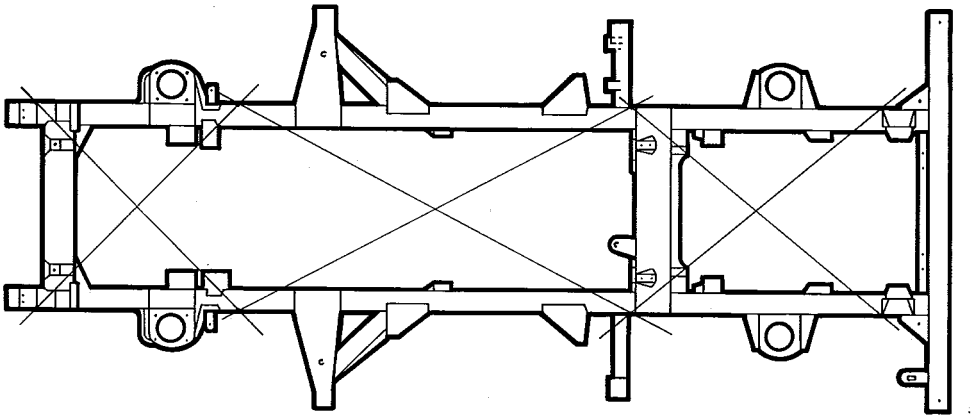

LAND ROVER 90

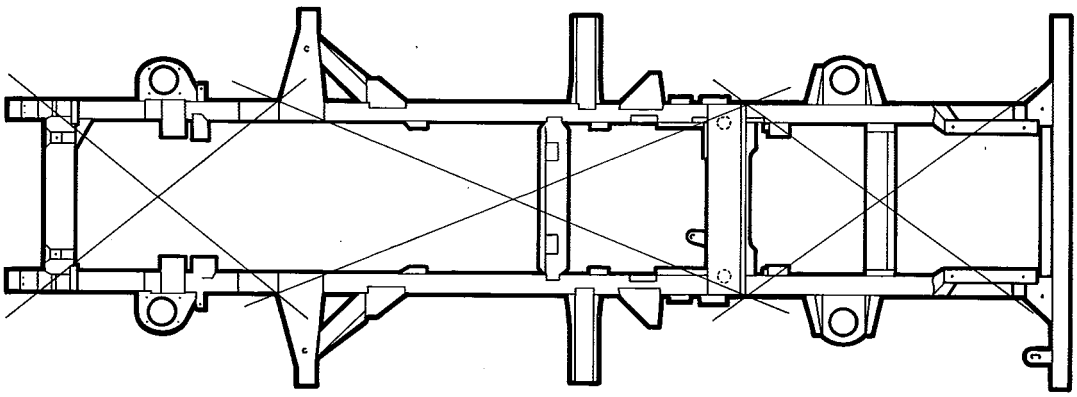

LAND ROVER 110

LR4412M

LAND ROVER 90 CHASSIS

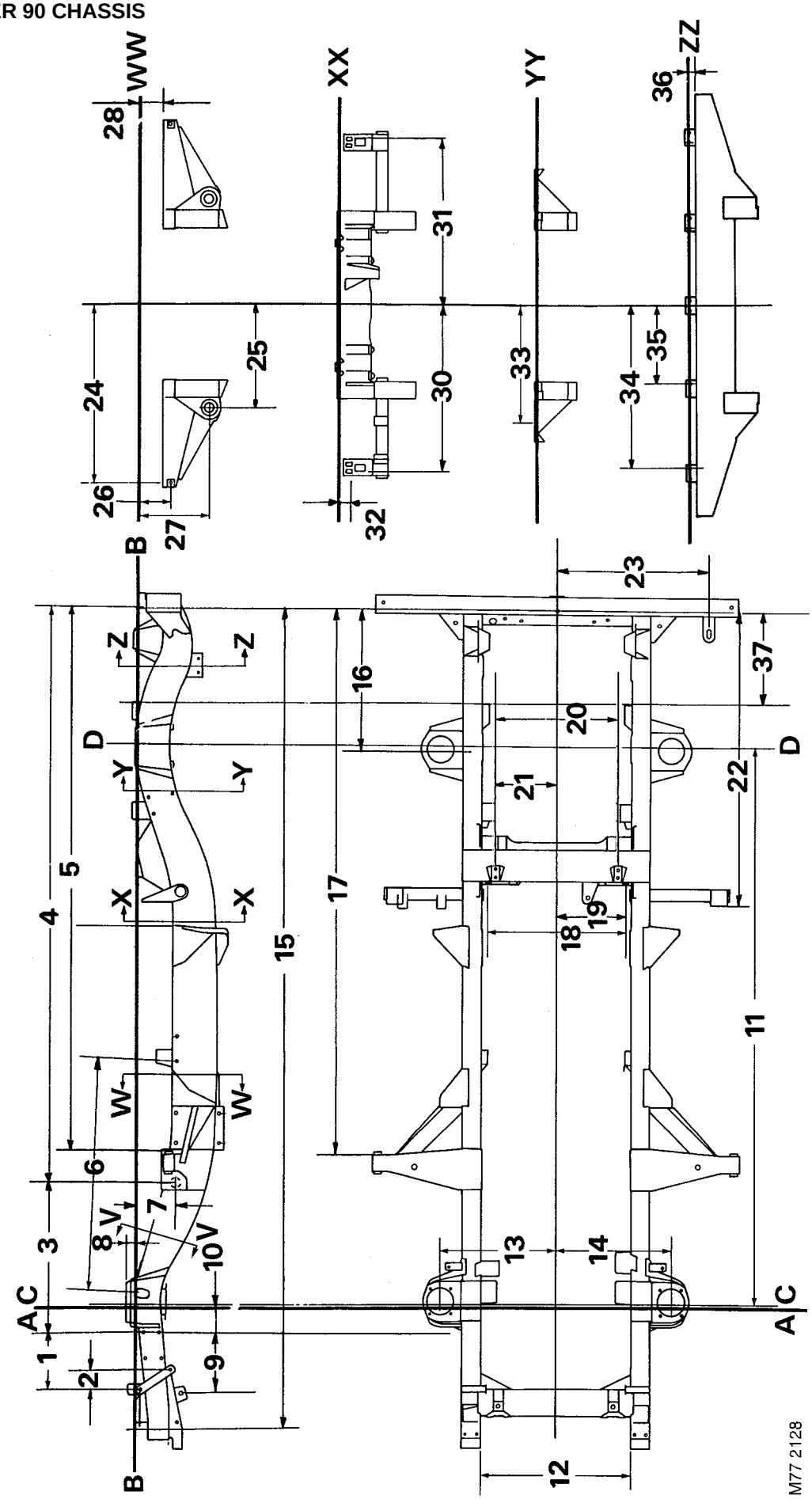

LAND ROVER 90

CHASSIS ALIGNMENT DIMENSIONS

A - Front Datum
B - Chassis Datum
C - Front axle centre line
D - Rear axle centre line

1. 239,0 - 236,5 mm
2. 82,0 - 79,5 mm
3. 633 mm
4. 2420,6 - 2418,6 mm
5. 2306,4 - 2305,4 mm
6. 981,2 - 978,7 mm
7. 182,7 mm
8. 41,5 - 37,0 mm
9. 252 - 250 mm
10. 110 mm
11. 2360mm - Wheelbase
12. 636 - 634 mm
13. 488 - 482 mm
14. 488 - 482 mm
15. 3431,1 - 3426,1 mm
16. 588,3 - 586,3 mm
17. 2313,8 - 2311,8 mm
18. 590,5 mm
19. 295,25 mm
20. 519,30 - 517,30 mm
21. 259,80 - 258,50 mm
22. 1242,6 - 1240,6 mm
23. 642,5 - 639,5 mm
24. 750,9 mm
25. 439,5 - 436,5 mm
26. 136,5 mm
27. 299,5 - 295,5 mm
28. 103 - 100 mm
29. 131,5 - 126,5 mm
30. 705,5 - 704,5 mm
31. 705,5 - 704,5 mm
32. 42,2 - 40,2 mm
33. 491 - 486 mm
34. 594,2 - 593,4 mm
35. 283,0 - 282,2 mm
36. 32,25 - 31,25 mm
37. 397 - 395 mm

Engine mounting dimensions - section V-V

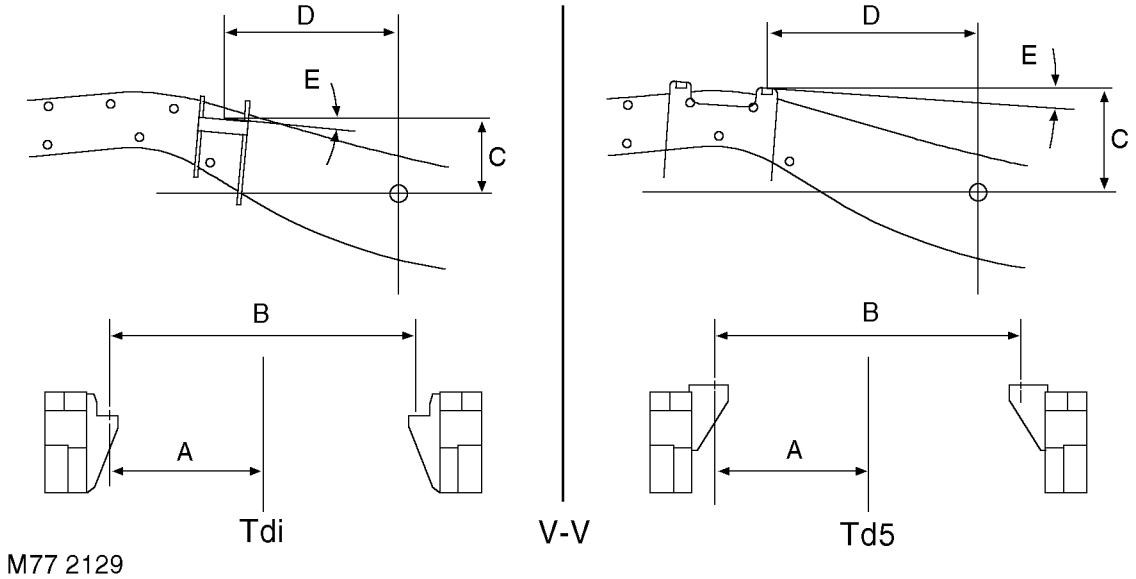

Section V-V, Tdi and Td5 engine mounting bracket dimensions. The dimensions are applicable to all derivatives.

Tdi dimensions:
A = 276.5
B = 553
C = 127.9
D = 317.4
E = 4 degrees

Td5 dimensions:
A = 273.2
B = 546.5
C = 187.8
D = 374.3
E = 4 degrees

LAND ROVER 110

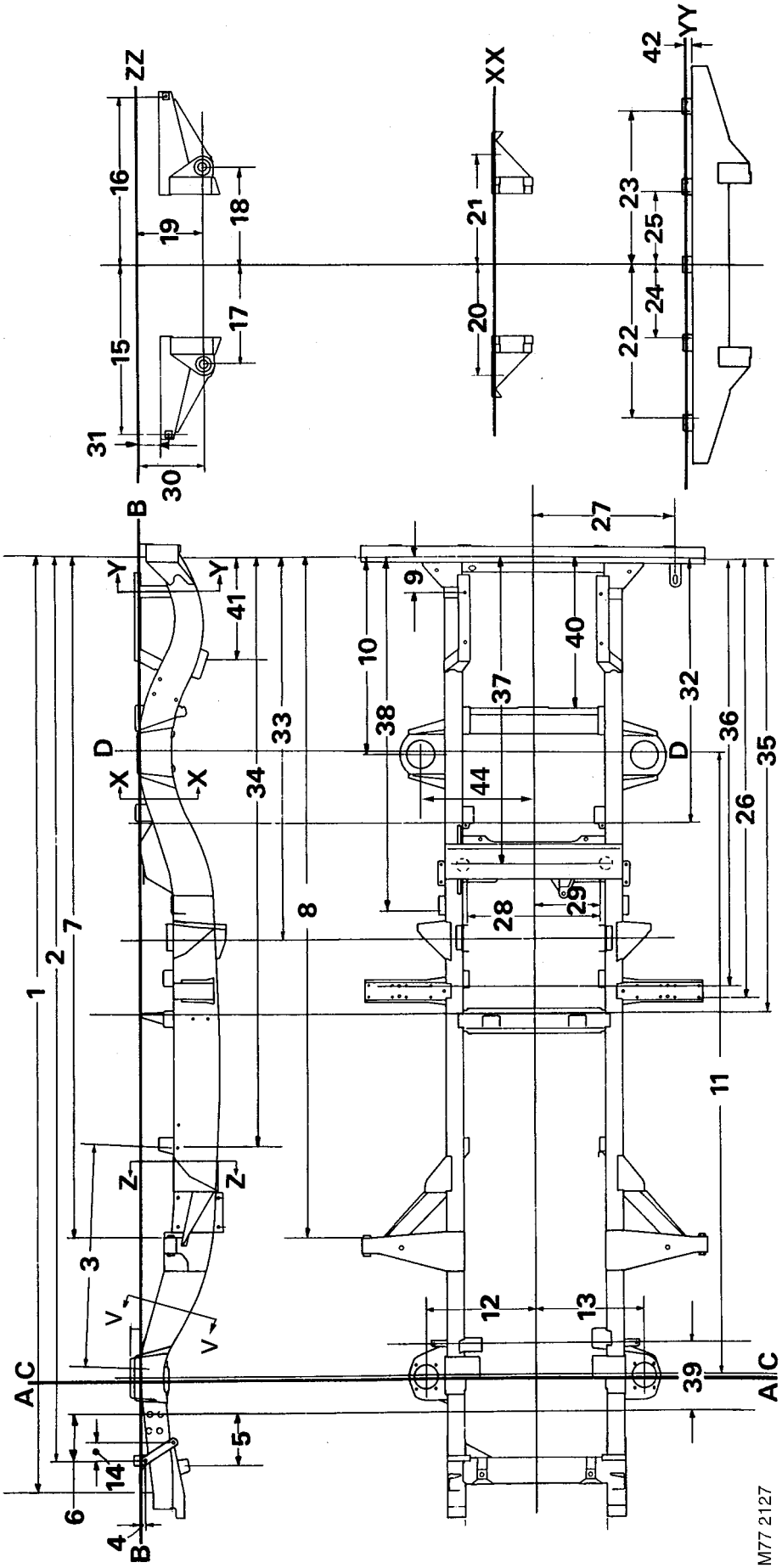

LAND ROVER 110

CHASSIS ALIGNMENT DIMENSIONS

A - Front Datum
B - Chassis Datum
C - Front axle centre line
D - Rear axle centre line

1. 4148 - 4143 mm
2. 4009,5 - 4005 mm
3. 978,7 - 981,2 mm
4. 22 - 20 mm
5. 252 - 250 mm
6. 239 - 236,5 mm
7. 3023,3 - 3022,3 mm
8. 3030,7 - 3028,7 mm
9. 155 - 153 mm
10. 871,2 - 869,2 mm
11. 2794 mm - Wheelbase
12. 488 - 482 mm
13. 488 - 482 mm
14. 82 - 79,5 mm
15. 750,9 mm
16. 750,9 mm
17. 440,5 - 435,5 mm
18. 440,5 - 435,5 mm
19. 299,5 - 295,5 mm
20. 500 - 495 mm
21. 500 - 495 mm
22. 594,2 - 593,4 mm
23. 594,2 - 593,4 mm
24. 283 - 282,2 mm
25. 283 - 282,2 mm
26. 1970 - 1968 mm
27. 642,9 - 639,5 mm
28. 750,9 mm
29. 290,5 mm
30. 295,5 mm
31. 299,5 - 295,5 mm
32. 103 - 100 mm
33. 1177,5 - 1175,5 mm
34. 1692,5 - 1689,5 mm
35. 2610 - 2606 mm
36. 2040,5 - 2037,5 mm
37. 1912,5 - 1909,5 mm
38. 1359 - 1357 mm
39. 1573 - 1571 mm
40. 270 - 268 mm
41. 665,5 - 663,5 mm
42. 440 - 438 mm
43. 32,25 - 31,25 mm

Section V-V is through the engine mountings. Dimensional information for the mountings can be found in Land Rover ’90’ engine mounting dimensions.

LAND ROVER 130

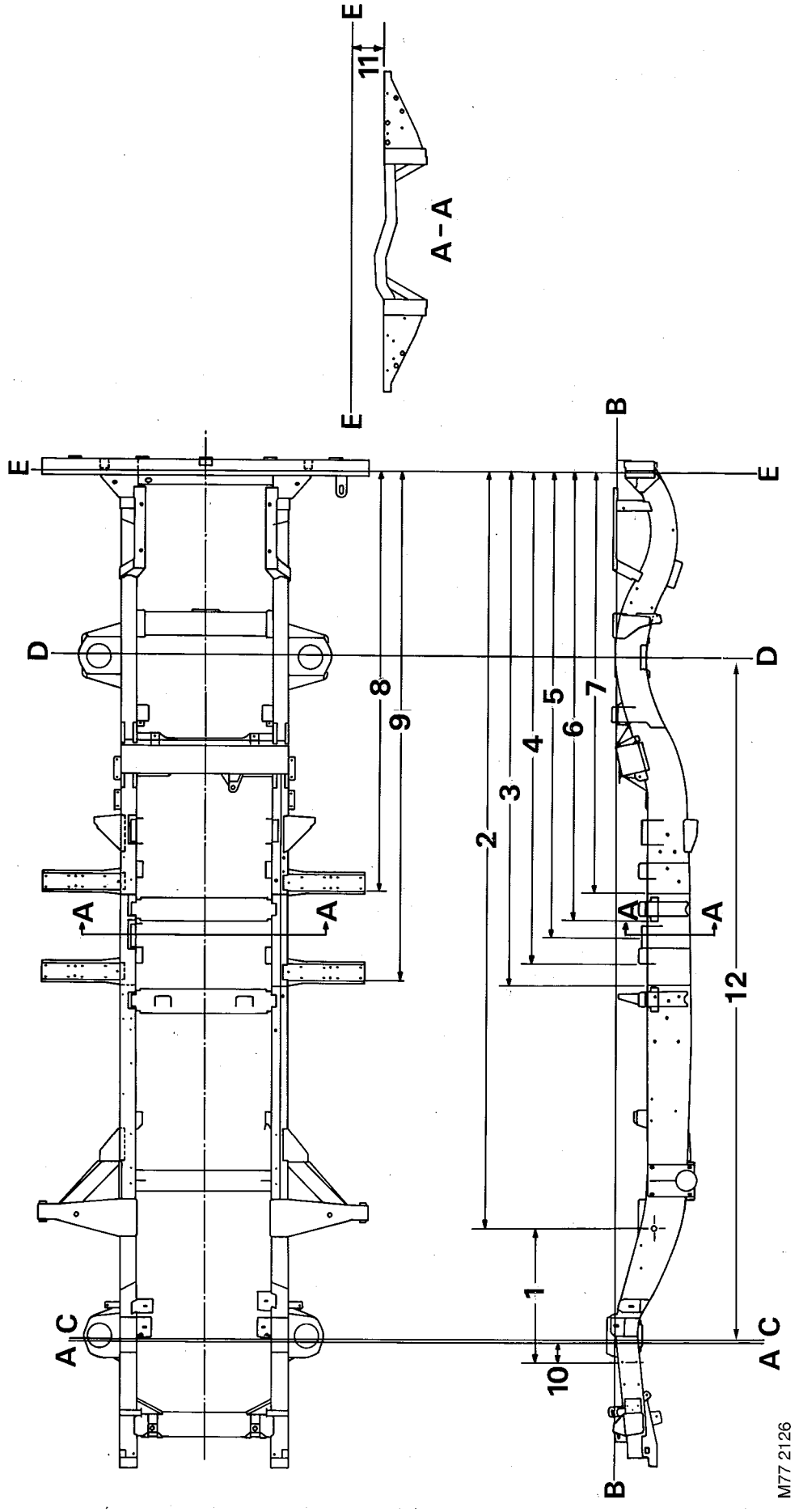

LAND ROVER 130

CHASSIS ALIGNMENT DIMENSIONS

A - Front Datum
B - Chassis Datum
C - Front axle centre line
D - Rear axle centre line
E - Chassis Datum, section A - A

1. 633,0 mm reference only
2. 3569,3 - 3567,3 mm
3. 2421,8 - 2419,8 mm
4. 2317,5 - 2314,5 mm
5. 2188,3 - 2185,3 mm
6. 2119,5 - 2117,3 mm
7. 1990 - 1988 mm
8. 1970 - 1968 mm
9. 2401,8 - 2399,8 mm
10. 110,0 mm reference
11. 149,7 - 146,7 mm reference dimension
12. 3225.8 mm - Wheelbase

NOTE: The above dimensions are for the Land Rover 130 chassis frame. For additional measurements, refer to the Land Rover 110 chassis frame drawing and aligment dimensions.

GAP AND PROFILE INFORMATION

The following information is to be used as a guide to assist the technician in refitting exterior body panels and trim items, to achieve a correctly aligned and cosmetically acceptable vehicle.

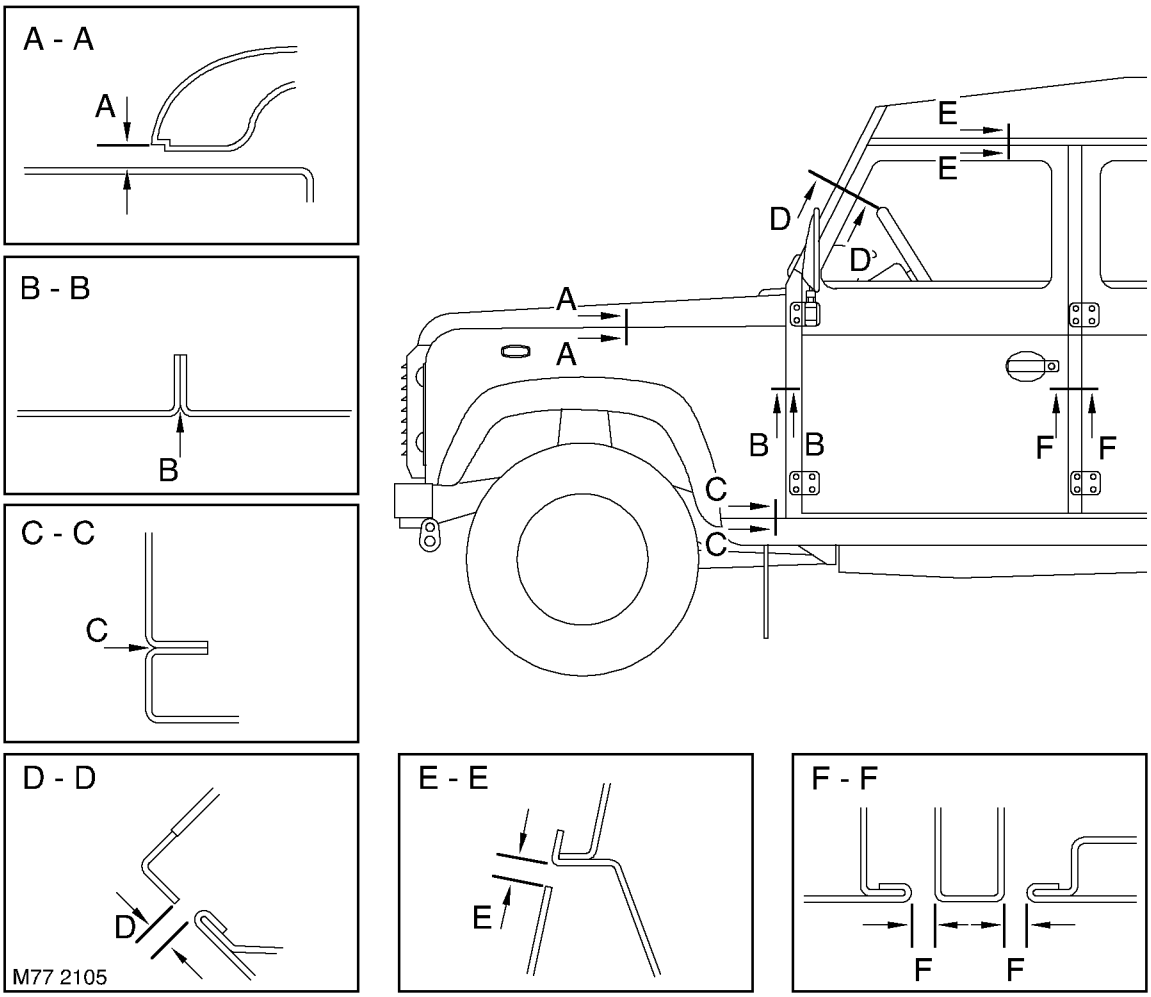

Section A-A, Bonnet to wing, gap A = 3 - 8 mm. To be parallel within 2 mm.

Section B-B, Wing to 'A' post lower, gap B = 0. Profile = +/- 1 mm.

Section C-C, Wing to sill, gap C = 0. Profile = +/- 1 mm.

Section D-D, Screen aperture to door frame, gap D = 5 - 9 mm.

Section E-E, Door frame to roof, gap E = 7 - 11 mm.

Section F-F, Front and rear door to 'B/C' post, gap F = 7 - 11 mm.

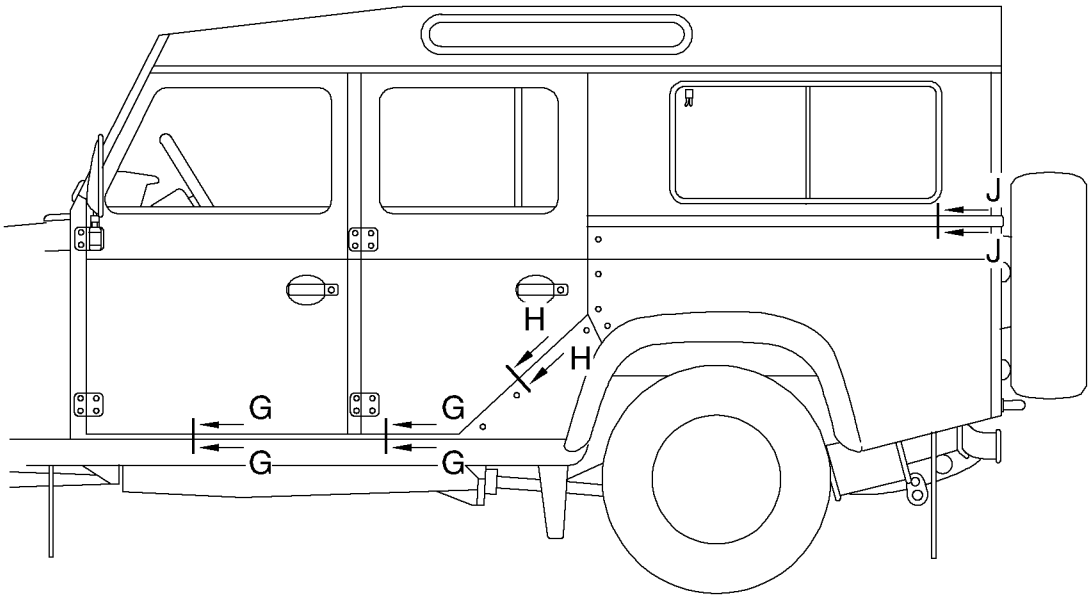

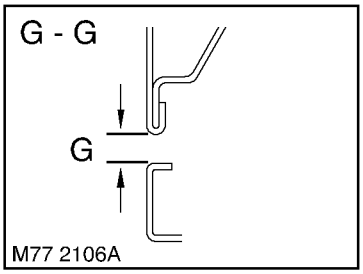

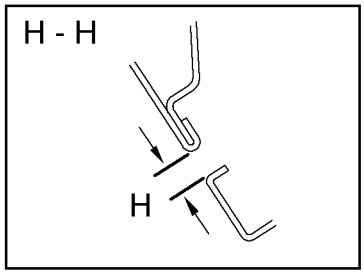

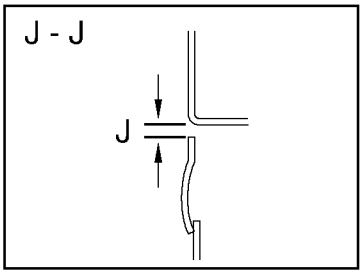

Section G-G, Door to sill, gap G = 7 - 11 mm. Door profile to sill = 0 to + 2 mm.

Section H-H, Rear door to body, gap H = 7 - 11 mm. Door profile to body = 0 to + 3 mm.

Section J-J, Body side lower to body, gap J = 0 - 4 mm. To be parallel within 2 mm.

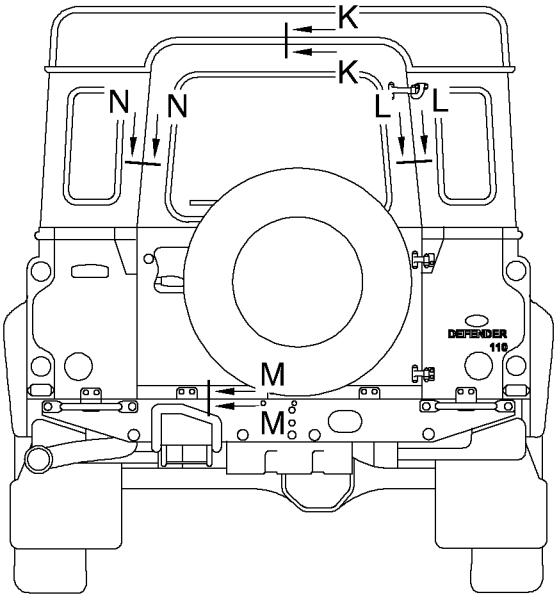

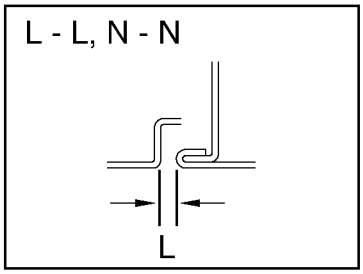

M77 2107A

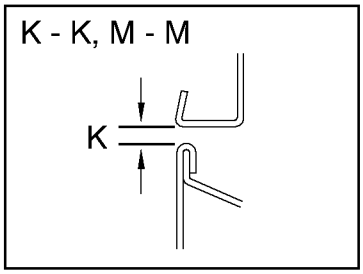

Section K-K, Roof to taildoor, gap K = 7 - 9 mm. Profile = +/- 1 mm.

Section L-L, N-N, Body side to taildoor, gap L = 5 - 7 mm. Profile = +/- 1 mm.

Section M-M, Body rear to taildoor, gap M = 7 - 9 mm.

APPROVED MATERIALS

Joint types:

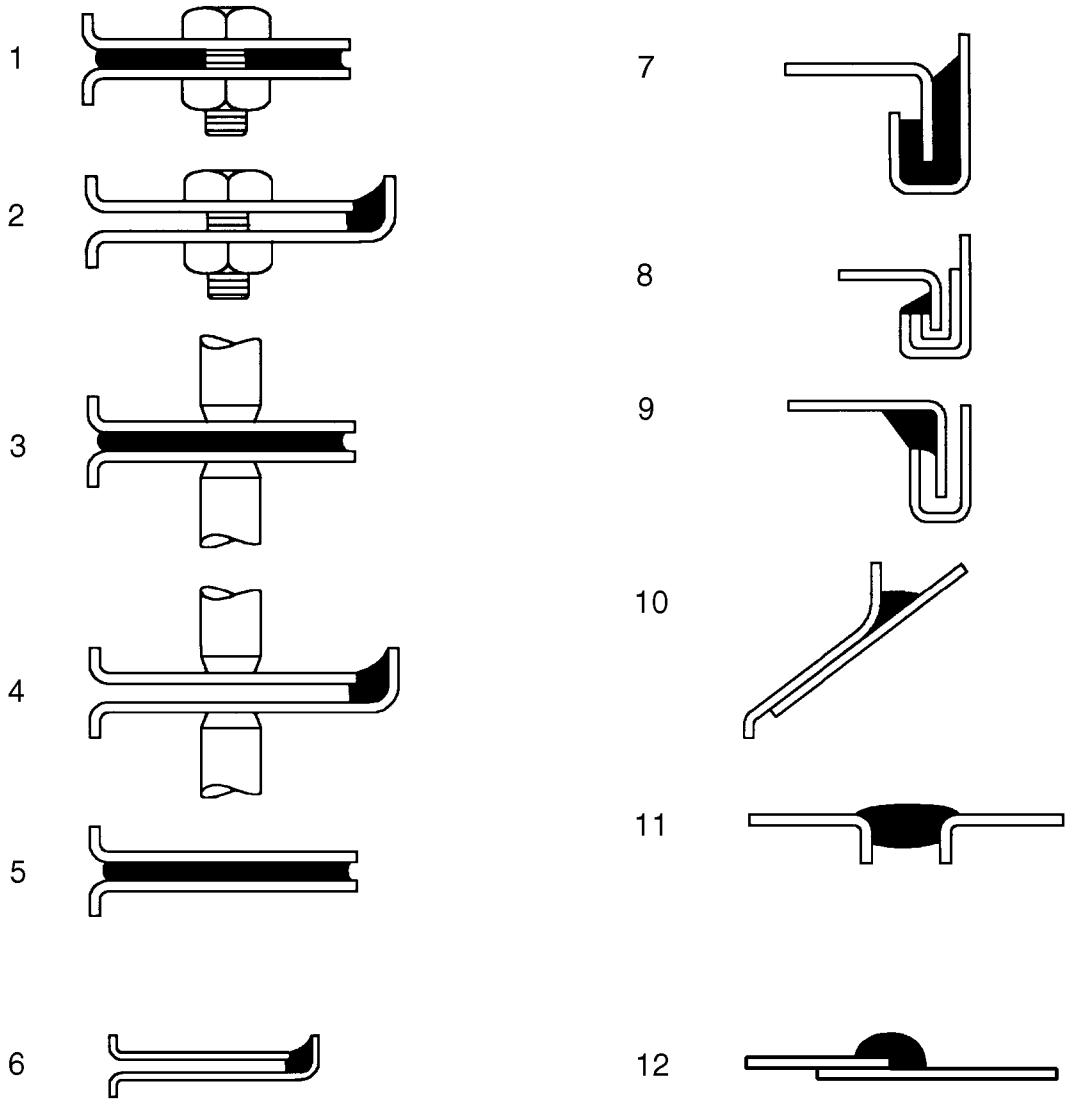

77M1584

1. Between bolted panels
2. Between bolted panel edges
3. Between spot welded panels
4. Between spot welded panel edges
5. Between bonded panels
6. Between bonded panel edges
7. Clinch joints (type a)
8. Clinch joints (type b)
9. Clinch joints (type c)
10. Gaps between panels (type a)
11. Gaps between panels (type b)
12. Lap joint

DESCRIPTION - USEAGE	SUPPLIER	PART NUMBER
CAVITY WAXES		
Inner Cavity Wax (Transparent)	3M	(08909, 08919, 08929)
Inner Cavity Wax (Amber)	3M	(08901, 08911, 08921)
Cavity Wax	Croda	(PW57)
ENGINE BAY WAXES/LACQUERS		
Astrolan engine bay wax and Cosmetic Wax	Astors	DA3243/1
Engine Bay Cosmetic Wax/Lacquer	Croda	PW197
Engine Bay Cosmetic Wax/Lacquer	Dinol	4010
MISCELLANEOUS MATERIALS		
Flexible Parts Repair Material - rubber modified polypropylene parts	3M:	(05900)
Aerosol Auto' Adhesive (trim) - impact adhesive for trim parts	3M	(08080)
Water Shedder Repair	Teroson:	
Sound dampening foam	Gurit Essex:	Betacore 7999
SEAM SEALERS		
Body Caulking - type (b) gaps between panels	3M	08568
Drip Chek Clear - bolted, spot welded and bonded panel edges; type (a) and (b), gaps between panels; type (c) clinch joints	3M	08401
Drip Chek Heavy - type (b) gaps between panels; type (c) clinch joints	3M	08531
Flexseal Polyurethane Seam Sealer - bolted, spot welded and bonded panel edges; type (a) and (b) gaps between panels; type (b) clinch joints	3M	(08684, 08689, 08694)
Polyurethane Sealer (sachet)	3M	(08703, 08783, 08788)
Sprayable Sealer - type 12 lap joints	3M	(08800, 08823)
Super Seam Sealer - type 12 lap joints	3M	(08537)
Weld Thru' Sealer - between spot welded panels	3M	(08625)
Betafill Clinch and Brushable Sealer (Black, Grey, White)	Gurit Essex	10211/15/20
Clinch Joint and Underbody Coating (Grey, Beige)	Gurit Essex	(10101, 10707)
Leak-Chek Clear - between bolted panels; spot welded and bonded panel edges; type (c) clinch joints	Kent Industries	(10075)
Putty - type (a) and (b) gaps between panels	Kent Industries	
Polyurethane Seam Sealer between bolted panels; spot welded and bonded panel edges; type (a) and (b) gaps between panels	PPG	(6500)
Polyurethane Seam Sealer between bolted panels; spot welded and bonded panel edges; type (a) and (b) gaps between panels	Teroson	92

DESCRIPTION - USEAGE	SUPPLIER	PART NUMBER
SEAM SEALERS - continued		
Terolan Light Seam Sealer - bolted, spot welded and bonded panel edges; type (a) and (b) gaps between panels; between bonded panels; type (c) clinch joints	Teroson	
Terolan Special Brushable Seam Sealer - lap joints 12	Teroson	
Terostat Sprayable Seam Sealer - bolted, spot welded and bonded panel edges; between bonded panels; type (a) and (b) gaps between panels	Teroson	9320
Terostat 1K PU Seam Sealer (SE 20) - type (a) and (b) gaps between panels; spot welded and bonded panel edges	Teroson	
Sealing compound - bolted, spot welded and bonded panel edges; type (b) gaps between panels	Wurths	8901001/-/6
STRUCTURAL ADHESIVES		
Automotive Structural Adhesive - between bonded panels; type 5 and 7	3M	08122
Two part Structural Epoxy - between bonded and spot welded panels; type (a) clinch joints	Ciba - Geigy	XB5106/7
UNDERBODY SEALERS		
Body Schutz	3M	08861
Spray Schutz	3M	08877
Crodapol Brushable Sealer	Croda	PV75
Terotex Underseal (CP02)	Teroson	9320
UNDERBODY WAXES		
Stone chip coating (smooth)	3M	08158/9
Underbody Wax	Croda	PW61
Underbody Wax	Dinol	Tectacote 205
WELD-THROUGH PRIMERS		
Weld-thru' coating	3M	05913
Zinc Spray	3M	09113
Zinc Rich Primer	ICI	P-565 634

APPLICATION EQUIPMENT

SATA Schutz Gun Model UBE

Specifications:
Air consumption ..... 200 litres/min. (7 ft^3/min.) @ 45 psi
Weight 660grams (23.3oz)
Manufactured and supplied by:
Sata Gmbh
Minden Industrial Ltd.
16 Greyfriars Road
Moreton Hall
Bury St. Edmunds
Suffolk IP32 7DX
Tel. (01284) 760791

The Sata Schutz Gun is approved for the re-treatment of vehicle underbody areas with protective coatings as supplied in 1-litre (1.76pt.), purpose-designed, 'one-way' containers. The screw thread fitting (female on the gun) will fit most Schutz-type packs.

Full operating details are supplied with the equipment.

NOTE: Always clean gun after use with the appropriate solvent.

Sata HKD1 Wax Injection Equipment

The Sata HKD1 is approved by Land Rover for use in all cavity wax re-treatment operations. The equipment comprises a high quality forged gun with 1-litre capacity pressure feed container, a flexible nylon lance, 1100 mm (43.3 in) straight steel lance and hooked wand lance. A quick-change coupling is a standard fitting to enable lances to be easily interchanged. The lances each have their own spray pattern characteristics to suit the type of box section to be treated.

The Sata HKD1 is covered by a 12 month warranty. All replacement parts and service are obtainable from the suppliers.

Cooper Pegler Falcon Junior Pneumatic (Airless)
Manufacturer and supplier:
Cooper Pegler & Co. Ltd.
Burgess Hill
Sussex RH15 9LA
Tel. 04 446 42526

Intended primarily for applying transit wax, the Falcon Junior pneumatic sprayer has a 5-litre (1 gal.) container with integral hand pump. This high quality unit provides a simple and effective means of wax spraying without the need for compressed air or additional services.

A selection of nozzles, lances and hoses together with a trigger valve assembly incorporating a filter enable the sprayer to be used in a variety of applications. These include general maintenance, wax injection and paint application. All parts are fully replaceable and include a wide range of nozzle configurations.

The Falcon Junior is fitted with Viton seals and is guaranteed for 12 months.

3M Application Equipment
Manufacturer:
3M UK PLC
Automotive Trades Group
3M House
PO Box 1
Market Place
Bracknell
Berks. RG12 1JU
Tel. (01344) 858611

All 3M equipment is available from local trade factors or 3M refinishing factors.

3M Caulking Gun 08002
A lightweight, robust metal skeleton gun designed to accommodate 325 mm (12.8 in) cartridge for dispensing sealants etc. This gun facilitates rapid cartridge loading and features a quick-release lever for accurate material ejection and cut-off control.

3M Pneumatic Cartridge Gun 08012
An air line fed gun for application of 3M cartridge products. Excellent ease of application for a smooth sealant bead, and incorporates a regulator valve for additional control.

Other 3m applicator equipment available:

3M Pneumatic Applicator Guns
Air line fed gun for application of 3M sachet sealers (Part No. 08006 for 200 ml (6 fl oz) and 310 ml (9 fl oz) sachets, and Part No. 08007 for all size sachets including 600 ml (18 fl oz).

3M Applicator Gun 08190
For application of 3M Structural Adhesive 08120.

3M Inner Cavity Wax Applicator Gun
Features 750 mm (29.6 in) flexible tube and using 1-litre (1.76 pt) canisters, this approved equipment is available from all 3M refinishing factors.

Other 3m applicator equipment available:

Heavy Duty Manual Gun.

Cavity wax application equipment and techniques

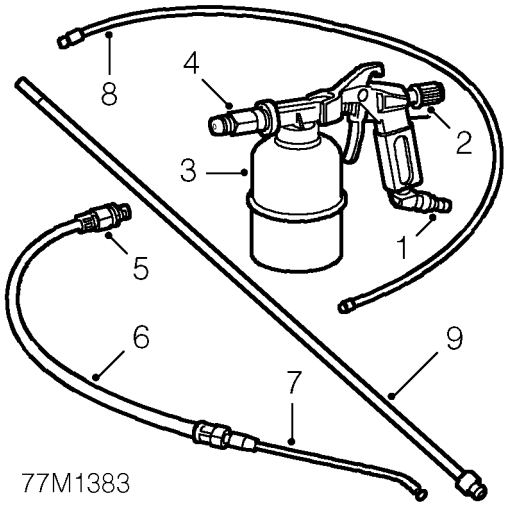

1. Air inlet
2. Flow control (spray pattern adjustment)
3. Pressure cup (1 litre [1.7 pt] capacity). Maximum pressure 140 psi (9.7 bar, 9.8 kg/cm^2).
4. Gun connector
5. Lance nipple connection
6. Flexible lance
7. Rigid directional hook wand (forward cone spray pattern)
8. Flexible nylon 1100mm (43.3in.) lance with 360°spray pattern
9. Rigid 1100mm (43.3in.) lance with 360°spray pattern

When re-treating wax-injected areas which have been disturbed during repairs, it is necessary to use a compressed air spray gun with integral pressure cup and a selection of interchangeable lances.

The following points must be observed during use, according to the attachments fitted:

- Use the rigid or flexible lance attachments with 360°spray dispersal when treating enclosed areas, to ensure maximum coverage.
- Where openings are restricted, use the hook nozzle to provide a more directional spray (e.g. inside narrow or short box sections).
- Spray exposed underbody surfaces directly from the gun less lance attachment and without disconnecting the fluid coupling.

1100 mm (43.3in.) Rigid Lance: The nozzle on the rigid lance produces a 360°circular spray pattern combined with a forward-directed spray. Although wax is distributed to all box section surfaces in a single stroke, effective and complete coverage is best achieved in long, straight structures and box section cavities by spraying on both outbound and return strokes of the lance.

The rigid lance also provides the positional accuracy required in shaped sections, by allowing visual assessment.

CAUTION: Do not force the lance into access holes when using this attachment.

1100 mm (43.3in.) Flexible Nylon Lance: This lance is similar in pattern to the rigid version, but provides the additional penetration needed for curved sections or in places where access is difficult. Its main limitation is a lack of positional accuracy inside box sections.

Carry out spraying on the outward stroke of the lance. Withdraw the lance slowly to ensure sufficient coverage. **DO NOT withdraw the lance too quickly.**

Keep the nylon tube of the lance away from the edges of the access hole to eliminate abrasion and extend the life of the tube. Take care to ensure that spraying ceases just before the nozzle emerges from the access hole. To assist this process, apply RED paint to the final 30mm (1.2in.) of the nozzle.

Hook Nozzle on Flexible Lance: The rigid hook produces a highly atomised, forward-directed, fully conical spray pattern having long range and good dispersion characteristics. This combination has good directional capabilities for the treatment of short, narrow sections and may also be used for direct spraying of inner wheel arches etc.

Position the flat area at the end of the lance at 180°to the nozzle spray direction. This will help to guide the spray more accurately when it is concealed in a box section or access hole.

For general spraying move the nozzle in an arc from side to side, to ensure full coverage.

NOTE: Keep all wax injection/application equipment clean. Use white spirit for this purpose immediately after wax injection operations.

Precautions during Body Repairs and Handling

Take care when handling the vehicle in the workshop. PVC underbody sealers, seam sealers, underbody wax and body panels may be damaged if the vehicle is carelessly lifted.

Always follow the correct lifting, jacking and towing procedures as shown in **GENERAL INFORMATION DATA, Information section**, paying particular attention to the following points:

- Locate trolley jack pads properly before lifting and lower the jack fully before withdrawal.
- Use only the approved hoisting points when overhead hoisting is required.
- Locate the lifting heads of wheel-free lifts correctly, with rubber or similar material placed between lifting head and underbody.

Steam Cleaning and Dewaxing
Due to the high temperatures generated by steam cleaning equipment, there is a risk that certain trim items could be damaged and some adhesives and corrosion prevention materials softened or liquified.

Adjust the equipment so that the nozzle temperature does not exceed 90°C (194°F). Take care not to allow the steam jet to dwell on one area, and keep the nozzle at least 300mm (11.8in.) from panel surfaces.

Do NOT remove wax or lacquer from underbody or underbonnet areas during repairs. Should it be necessary to steam clean these areas, apply a new coating of wax or underbody protection as soon as possible.

CORROSION PROTECTION

The following information details the materials that are applied during manufacture for corrosion protection.

Factory Treatments
The Defender is treated with the following anti-corrosion materials in production:

- A PVC-based underbody sealer material which is sprayed onto the underfloor, wheel arches and undersill areas.
- An application of cavity wax which is sprayed into enclosed cavities and box sections.
- A final coating of underbody wax to cover the complete underfloor including components but excluding brake discs, exhaust system and propeller shafts.
- A coat of protective lacquer applied to the whole body.
- A coat of protective wax applied to the engine bay and wheel arch areas.

NOTE: Do not apply wax to engine bay of Td5 models.

In addition to the above measures, all steel parts are zinc-coated both sides.

Underbody Sealer
Underfloor areas and outer sill panels are treated with a Plastisol PVC underbody sealer. This material is not suitable for re-treatment.

When repairing areas of underbody sealer, strip the factory-applied material back to a suitable break point, ensuring that a clean metal surface is exposed and that the edge of the existing material adheres soundly to the panel.

Blanking plugs and grommets in the floor pan (except those used for wax injection) MUST be fitted before underbody sealer application. Heat-fusible plugs which have been disturbed should either be refitted with the aid of a hot air blower or replaced with rubber grommets.

NOTE: Application of new underbody sealer must be carried out between primer and surfacer paint operations. Areas where seam sealer is used should be re-treated as necessary before application of underbody sealer.

CAUTION: Ensure that suspension units, wheels, tyres, power unit, driveshafts, exhaust and brakes (including all mounting points) are shielded prior to application of fresh underbody sealer.

Cavity Wax
Cavity wax is applied to certain box sctions The information given on the following pages is intended as a guide and shows the areas to be treated with cavity wax, as well as the access holes used during manufacture. **See GENERAL INFORMATION DATA, Sealing and corrosion protection section.**

Underbody Wax
A coat of underbody wax is applied to the entire underbody inboard of the sill vertical flanges, and covers all moving and flexible components EXCEPT for wheels and tyres, brakes and exhaust. The wax is applied over paints and underbody sealers.

The underbody wax must be reinstated following all repairs affecting floor panels.

CAUTION: Old underbody wax must be completely removed from a zone extending at least 200 mm (7.9 in) beyond the area where new underbody sealer is to be applied.

Engine Bay Wax
Reinstate protective engine bay wax disturbed during repairs using the approved material.

Wheel Arch Wax
Reinstate protective wheel arch wax disturbed during repairs using the approved material.

Stone Chip Resistant Paint/Primer
Re-treat all areas protected with factory-applied anti-chip primer with suitable approved material in repair.

Inspections during Maintenance Servicing
It is a requirement of the Land Rover Corrosion Warranty that the vehicle body is checked for corrosion by an authorised Land Rover dealer at least once a year, to ensure that the factory-applied protection remains effective.

Service Job Sheets include the following operations to check bodywork for corrosion:

- With the vehicle on a lift, carry out visual check of underbody sealer for damage.
- With the vehicle lowered, inspect exterior paintwork for damage and body panels for corrosion.

NOTE: Wash the vehicle and ensure that it is free from deposits prior to inspection. It is part of the owner's responsibility to ensure that the vehicle is kept free of accumulations of mud which could accelerate the onset of corrosion. The Dealer MUST wash the vehicle prior to inspection of bodywork if the customer has offered it in a dirty condition, and pay special attention to areas where access is difficult.

NOTE: The checks described above are intended to be visual only. It is not intended that the operator should remove trim panels, finishers, rubbing strips or sound deadening materials when checking the vehicle for corrosion and paint damage.

With the vehicle on a lift, and using an inspection or spot lamp, visually check for the following:

- Corrosion damage and damaged paintwork, condition of underbody sealer on front and rear lower panels, sills and wheel arches.
- Damage to underbody sealer on main floor and chassis members. Corrosion in areas adjacent to suspension mountings and fuel tank fixings.

NOTE: The presence of small blisters in PVC underbody sealer is acceptable, providing they do not expose bare metal.

Special attention must be paid to signs of damage caused to panels or corrosion material by incorrect jack positioning.

It is essential to follow the correct jacking and lifting procedures. **See GENERAL INFORMATION DATA, Information section.**

With the vehicle lowered, visually check for evidence of damage and corrosion on all painted areas, in particular the following:

- Front edge of bonnet.
- Visible flanges in engine compartment and boot.
- Lower body and door panels.

Where bodywork damage or evidence of corrosion is found during inspection, rectify this as soon as is practicable, both to minimise the extent of the damage and to ensure the long term effectiveness of the factory-applied corrosion protection treatment. Where the cost of rectification work is the owner's responsibility, the Dealer must advise the owner and endorse the relevant documentation accordingly.

Where corrosion has become evident and is emanating from beneath a removable component (e.g. trim panel, window glass, seat etc.), remove the component as required to permit effective rectification.

Underbody Protection Repairs
When body repairs are carried out, always ensure that full sealing and corrosion protection treatments are restored. This applies both to the damaged area, and also to areas where protection has been indirectly impaired as a result of accident damage or repair operations.

Prior to straightening out or panel beating, remove all corrosion protection material in the damaged area. This applies in particular to panels coated with wax, PVC underbody sealer, sound deadening pads etc.

WARNING: DO NOT use oxy-acetylene gas equipment to remove corrosion prevention materials. Large amounts of fumes and gases are liberated by these materials when they burn.

Equipment for the removal of tough anti-corrosion sealers offers varying degrees of speed and effectiveness. The compressed air-operated scraper (NOT an air chisel) offers a relatively quiet mechanical method of removal using an extremely rapid reciprocating action. During use, direct the operating end of the tool along the work surface.

The most common method is by the use of a hot air blower with integral scraper.

CAUTION: High temperatures can be generated with this equipment which may cause fumes. Always exercise care in its use.

Another tool, and one of the most efficient methods, is the rapid-cutting 'hot knife'. This tool uses a wide blade and is quick and versatile, able to be used easily in profiled sections where access is otherwise awkward.

Use the following procedure when repairing underbody coatings:

1. Remove existing underbody coatings.
2. After panel repair, clean the affected area with a solvent wipe, and treat bare metal with an etch phosphate material.
3. Re-prime the affected area. **DO NOT under any circumstances apply underbody sealer directly to bare metal surfaces.**
4. Replace all heat-fusible plugs which have been disturbed. Use rubber grommets of equivalent size if plugs are not available, but ensure that they are embedded in sealer.
5. Mask off all mounting faces from which mechanical components, hoses and pipe clips, have been removed. Underbody sealer must be applied **before** such components are refitted.
6. Brush sealer into all exposed seams.
7. Spray the affected area with an approved service underbody sealer.
8. Remove masking from component mating faces, and touch-in where necessary. Allow adequate drying time before applying underbody wax.

Underbody Wax
After refitting mechanical components, including hoses, pipes and small fixtures, mask off the brake discs and apply a coat of approved underbody wax.

NOTE: Where repairs include the application of finish paint coats in the areas requiring underbody wax, paint operations must be carried out BEFORE wax application.

Underbonnet Wax
Where repairs have involved replacement of engine bay panels, treat the entire engine compartment including all components, clips and small fixtures with an approved underbonnet lacquer or wax.

Proprietary Anti-Corrosion Treatments
The application of proprietary anti-corrosion treatments in addition to the factory-applied treatment could invalidate the Corrosion Warranty and should be discouraged. This does not apply to approved, compatible, preservative waxes which may be applied on top of existing coatings.

Fitting Approved Accessories
When fitting accessories it is important that the vehicle's corrosion protection is not affected, either by breaking the protective coating or by introducing a moisture trap.

DO NOT screw self-tapping screws directly into the body panel but fit plastic inserts first. Protect the edges of holes drilled into panels, chassis members and other body parts with a suitable zinc rich or acid etch primer, followed by a protective wax coating brushed onto the surrounding area.

DO NOT affix unpainted metal surfaces of any accessory directly to the vehicle bodywork unless they are suitably protected. Where metal faces are bolted together always interpose a suitable interface material such as weldable zinc rich primer, extruded strip or zinc tape.

CAVITY WAX

Cavity Wax Injection
Box sections treated with cavity wax are shown in this section. Repairs affecting these areas must include re-treatment with an approved cavity wax, using the access points illustrated. In addition, all interior surfaces which have been disturbed during repairs must be wax injected whether they have been treated in production or not. This includes all box members, cavities, door interiors etc. It is permissible to drill extra holes for access where necessary, provided these are not positioned in load-bearing members. Ensure that such holes are treated with a suitable zinc rich primer, brushed with wax and then sealed with a rubber grommet.

Prior to wax injection, ensure that the cavity to be treated is free from any contamination or foreign matter. Where necessary, clear out any debris using a compressed air supply.

Carry out wax injection after final paint operations. During application, ensure that the wax covers all flange and seam areas and that it is applied to all repaired areas of both new and existing panels.

NOTE: Apply cavity wax AFTER the final paint process and BEFORE refitting of any trim components.

It should also be noted that new panel assemblies and body shells are supplied without wax injection treatment which must be carried out after repairs.

Effective cavity wax protection is vital. Always observe the following points:

- Complete all finish paint operations before wax application.
- Clean body panel areas and blow-clean cavities if necessary, before treatment.
- Maintain a temperature of 18°C (64°F) during application and drying.
- Check the spray pattern of injection equipment.
- Mask off all areas not to be wax coated and which could be contaminated by wax overspray.
- Remove body fixings, such as seat belt retractors, if contamination is at all likely.
- Move door glasses to fully closed position before treating door interiors.
- Treat body areas normally covered by trim before refitting items.
- Check that body and door drain holes are clear after the protective wax has dried.
- Keep all equipment clean, especially wax injection nozzles.

The following Illustrations show the treatment areas and Injection holes for Cavity Wax application.

All areas symmetrically opposite to those shown are also treated.

Bulkhead assembly

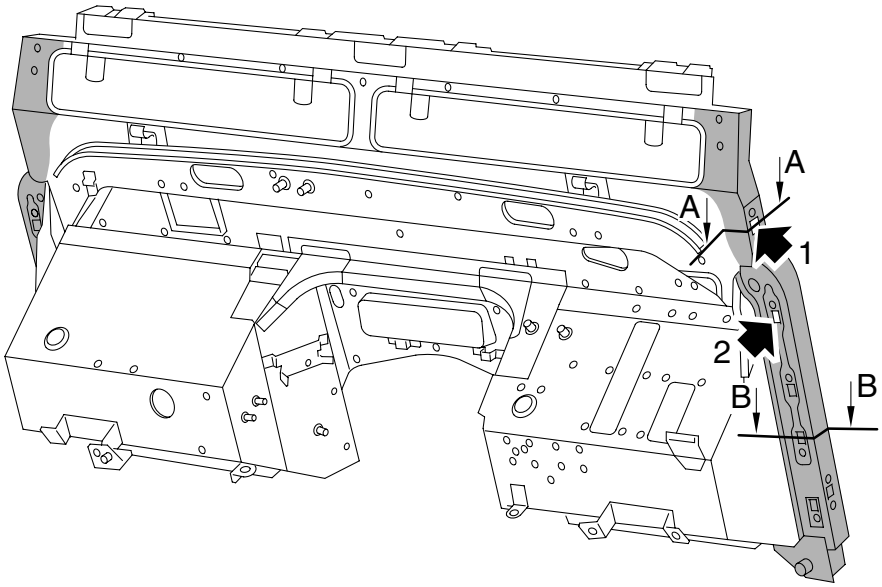

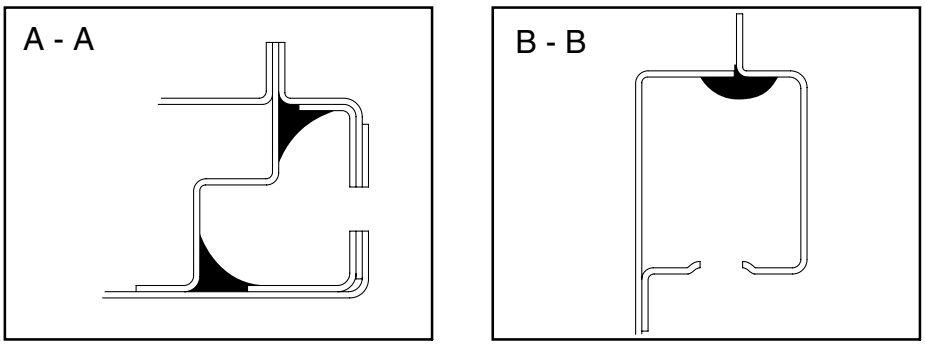

M77 2072A

Section A-A and B-B show application areas of cavity wax. Arrows 1 and 2 show application holes.

’B/C’ post assembly

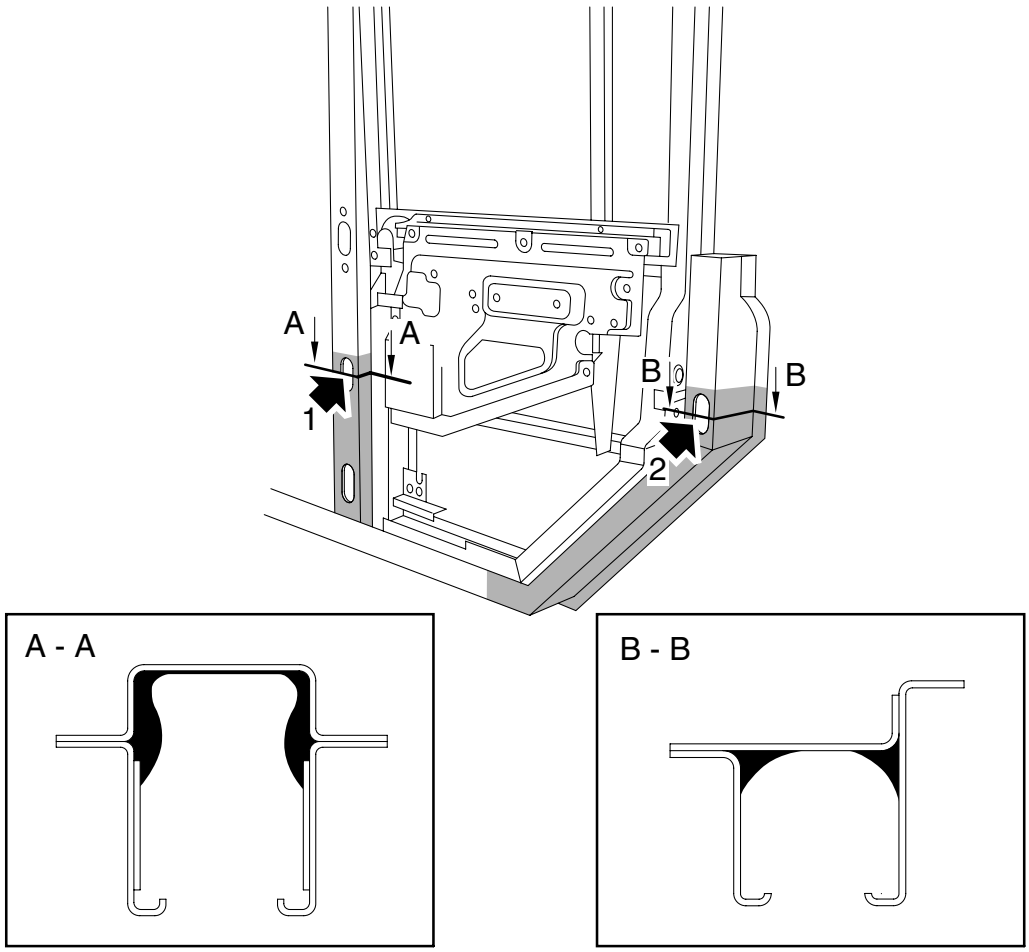

M77 2073A

Section A-A shows application area of cavity wax for the ’B/C’ post. Arrow 1 shows application hole.

Section B-B shows application area of cavity wax for the ’D’ post. Arrow 2 shows application hole.

Front door

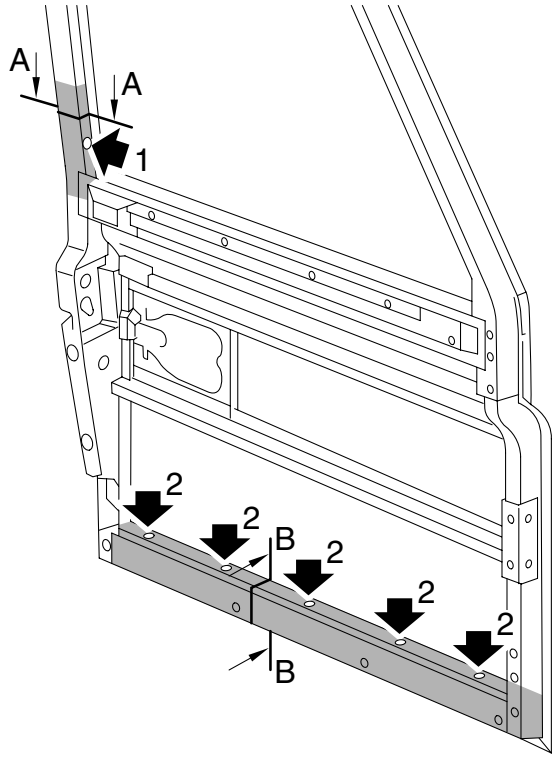

M77 2074A

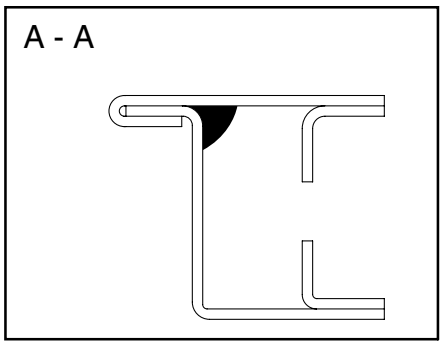

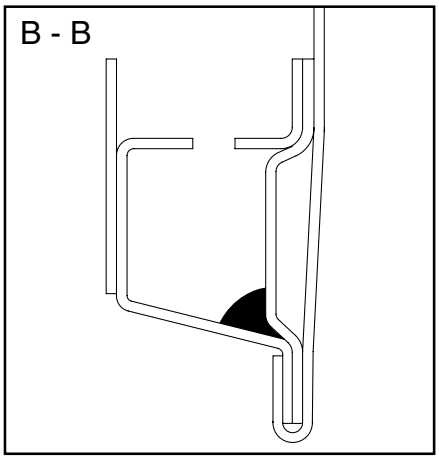

Section A-A and B-B show application areas of cavity wax for the front door. Arrows 1 and 2 show the application holes.

Rear door

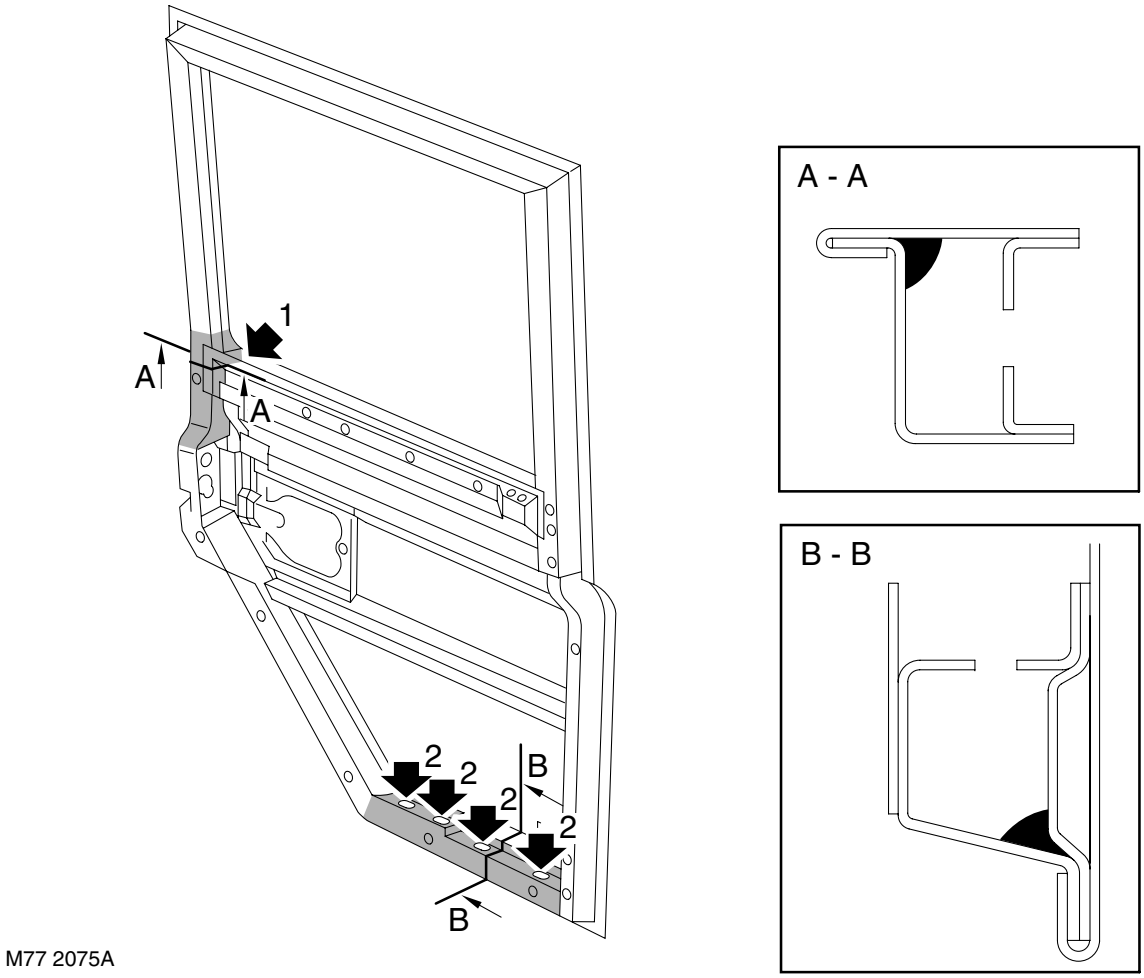

Section A-A and B-B show application areas of cavity wax for the rear door. Arrows 1 and 2 show the application holes.

SEALANTS AND ADHESIVES

Structural Adhesive
Metal-to-metal adhesive is applied to critical joint areas during factory assembly. The material used is a high-temperature, heat cured, nitrile phenolic which serves both to bond two metal surfaces and also to seal the joint against ingress of dust, water, petrol and fumes. This material is not suited for service use, and should be substituted in repair using a suitable medium strength adhesive.

When separating a joint treated with metal-to-metal adhesive, to avoid distortion it is recommended that the joint be gently heated until the bond weakens sufficiently to permit panel separation.

NOTE: DO NOT carry out MIG welding on a joint area which has been treated with metal-to-metal adhesive until all traces of adhesive have been removed.

The following Illustrations show the treatment areas for Structural Adhesive.
All areas symmetrically opposite to those shown are also treated.

Body side capping

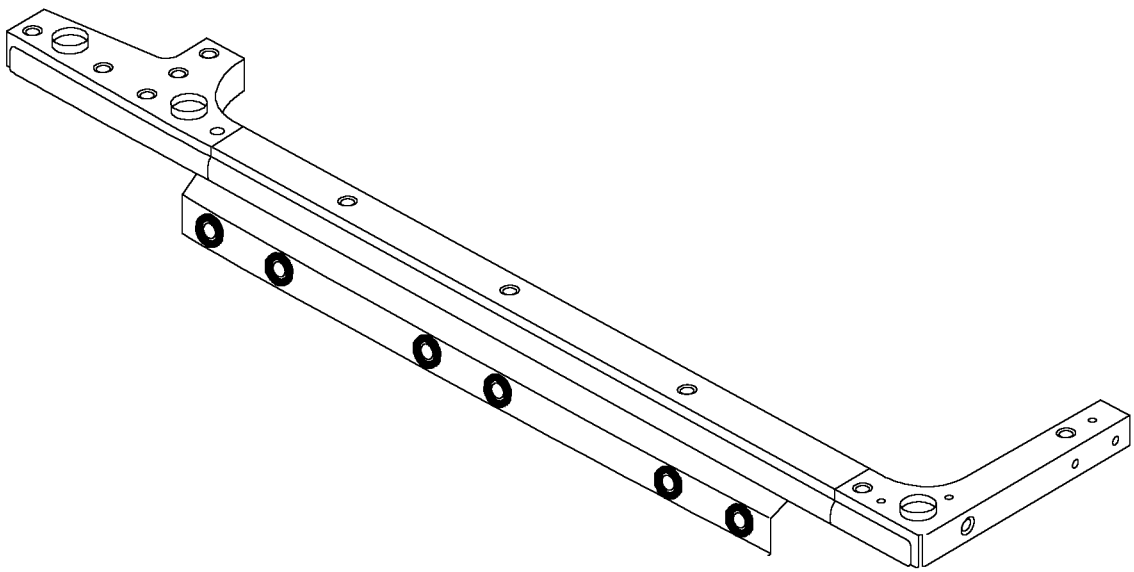

M77 2079

Structural adhesive applied around body side lower fixing holes

Seam Sealers
A heat cured, PVC Plastisol sealer is applied to joint areas during factory assembly. This material is not suitable for service use.

Carry out seam sealing after the application of primer and before the surfacer and final paint coats. Ensure that surfaces are first cleaned of all grease and oil. Apply the sealer material to the joint as a bead, either by hand or using an applicator gun. Where necessary, brush sealer well into the joint and wipe smooth using a cloth soaked with solvent such as Shell SBP3. This will ensure an acceptable cosmetic finish.
Apply sealer to ALL accessible joints following repair work. Be aware that damage to a vehicle can often result in deflection to those areas of the body which are remote from the impact. The sealers in these areas can therefore be disturbed by subsequent straightening and repair operations. Check joints in the vicinity of the area undergoing repair for evidence of cracked sealer, clean them out as required and re-treat them with fresh sealer using the following procedure:

- Clean the affected joint or seam and re-treat any exposed metal areas with a suitable etch phosphate primer.
- Treat affected area with an acid-etch primer.
- Apply appropriate seam sealer as necessary.
- Apply appropriate colour coat (and underbody sealer as applicable).

Where joints are inaccessible following the reassembly or fitment of components, ensure that a paste-type sealer is applied to such joints. Certain seams also become inaccessible after the completion of panel repairs. In such instances the paint process should be carried out and sealers applied before final assembly.

Provided access is adequate, apply the sealer to both sides of the repair joint. Where access is limited to one side only (e.g. box sections), inject the affected box member with cavity wax.

CAUTION: ALWAYS deploy an extractor unit to remove toxic fumes when using oxy-acetylene equipment to remove panels treated with wax and sealers.

The following Illustrations show the treatment areas for Seam Sealing.

Seam sealing on bulkhead assembly - front view
All areas symmetrically opposite to those shown are also treated.

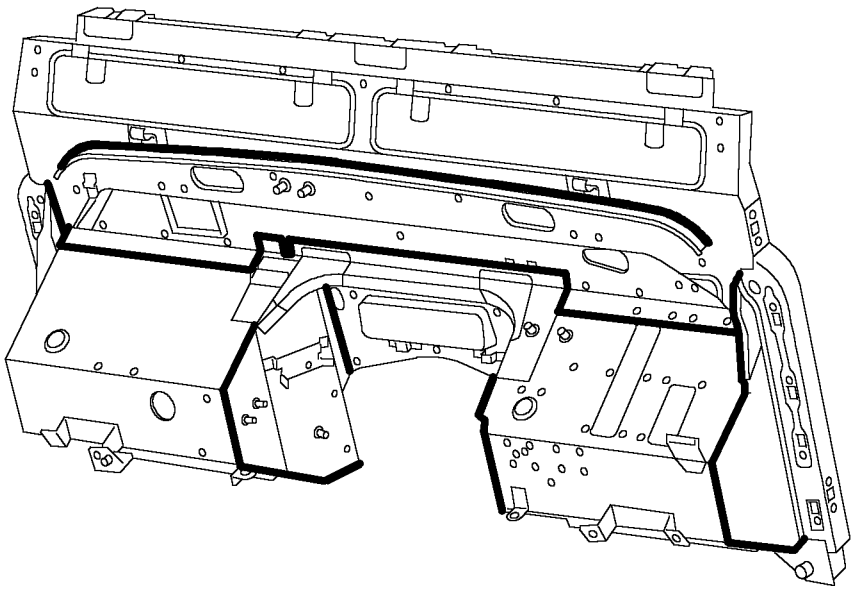

M77 2082A

Seam sealing on bulkhead assembly - rear view

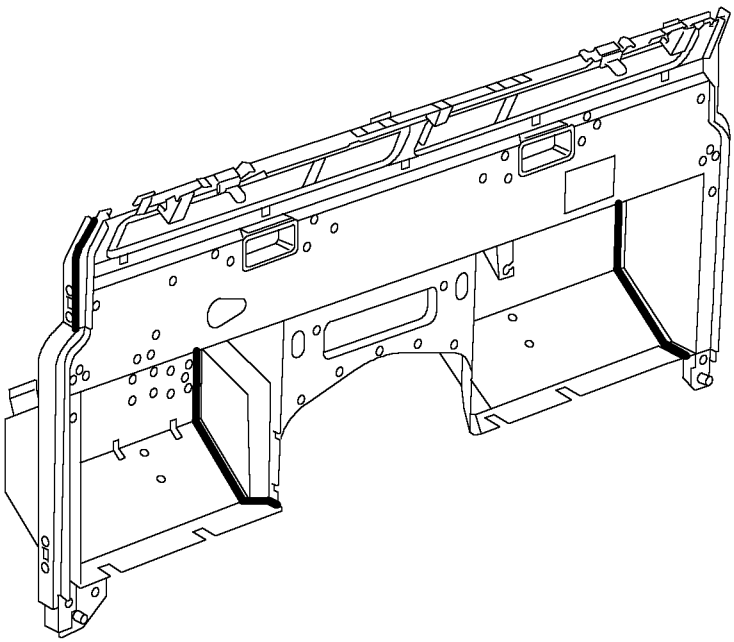

M77 2083A

Seam sealer on body side assembly

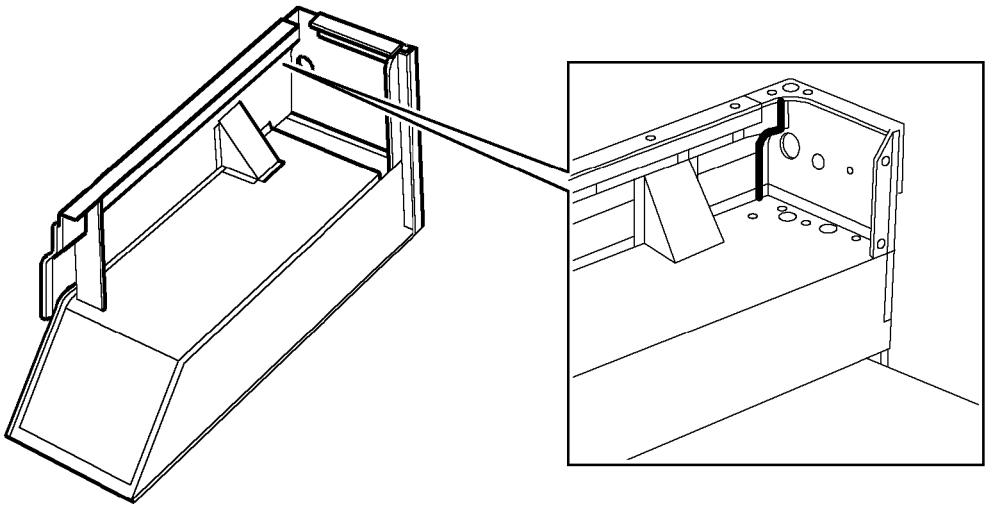

M77 2084A

Seam sealer on front door

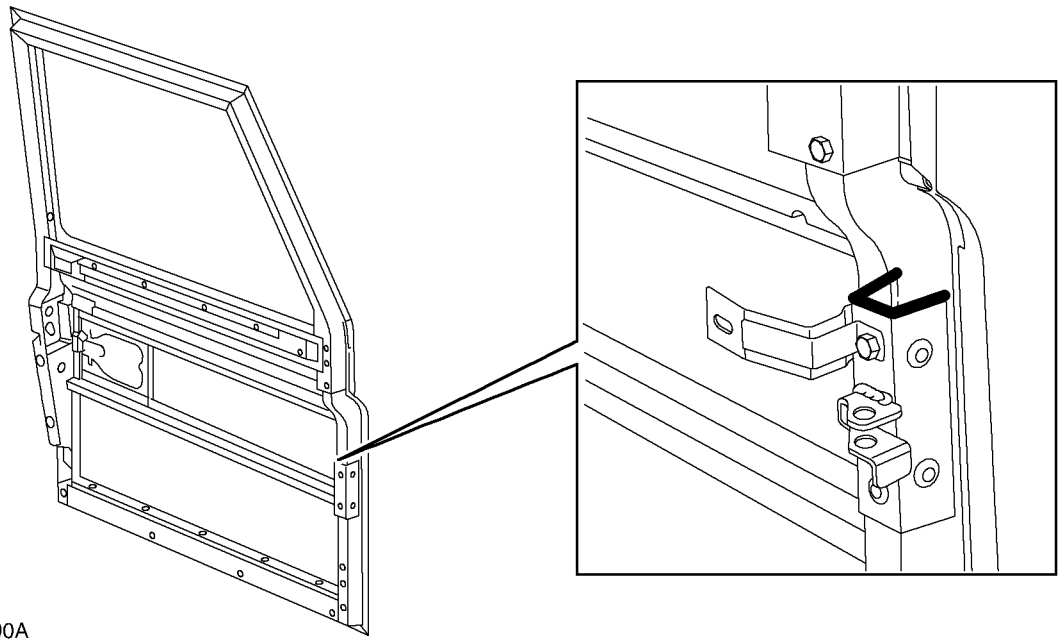

M77 2090A

NOTE: Seam sealer to be wiped after application for cosmetic purposes.

Seam sealer on rear end assembly

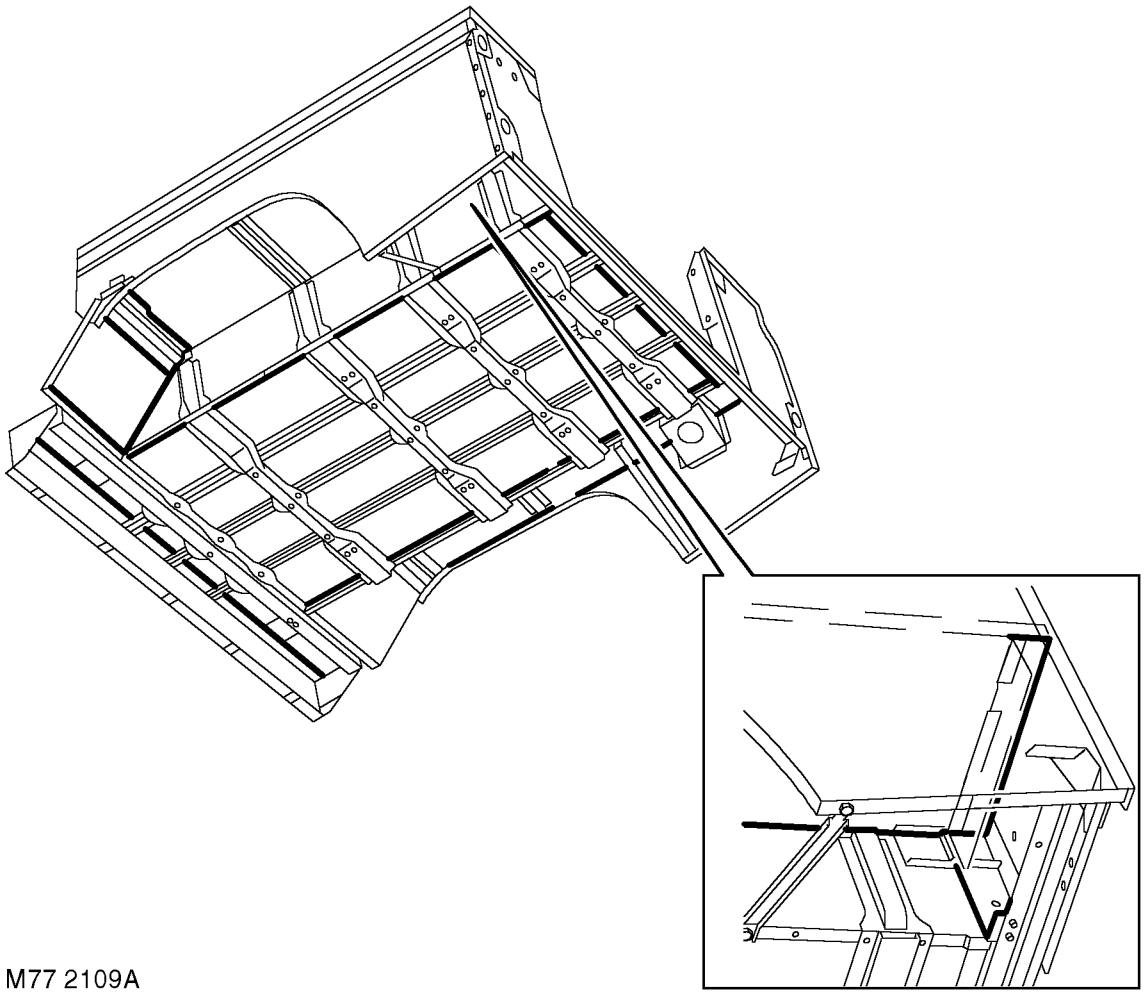

CAUTION: Do not block drain holes when applying seam sealer.

Seam sealer on roof assembly

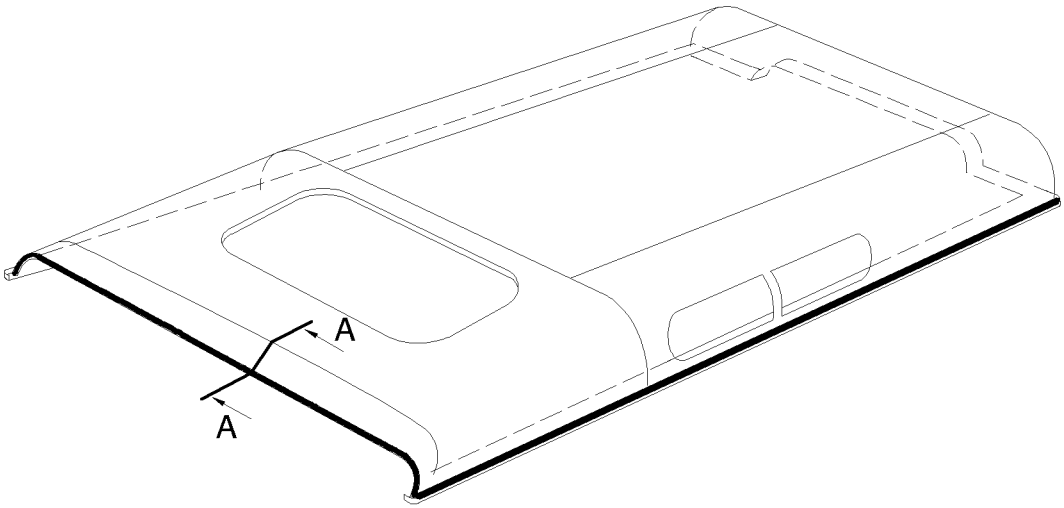

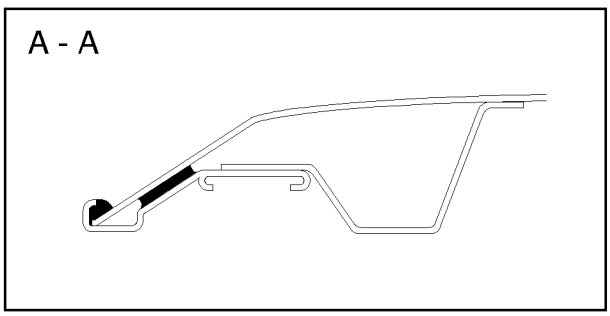

M77 2091A

PUTTY APPLICATION AREAS

The following Illustrations show the treatment areas for Putty application.
All areas symmetrically opposite to those shown are also treated.

Putty location on bulkhead assembly

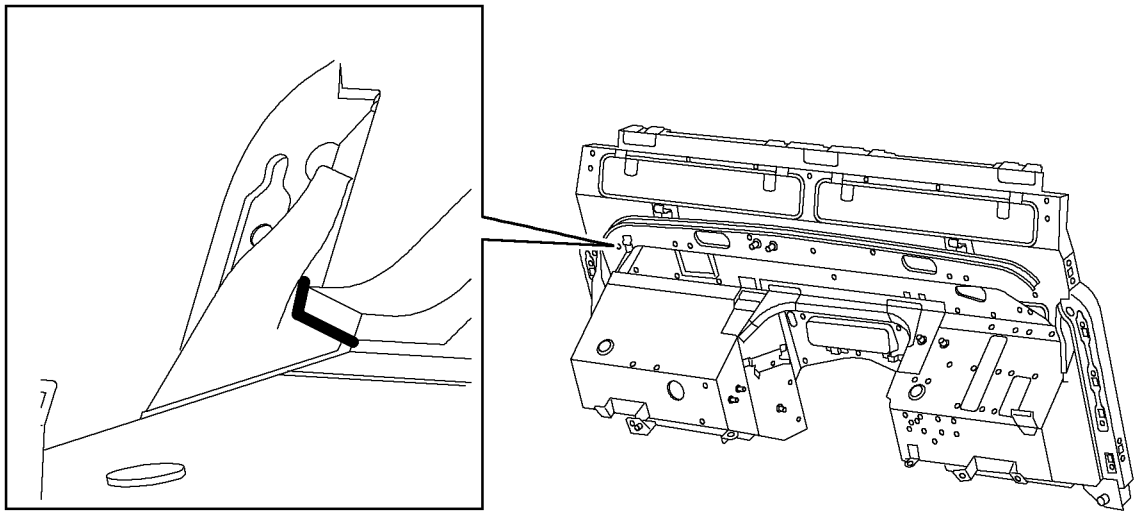

M77 2086A

Putty location on rear end

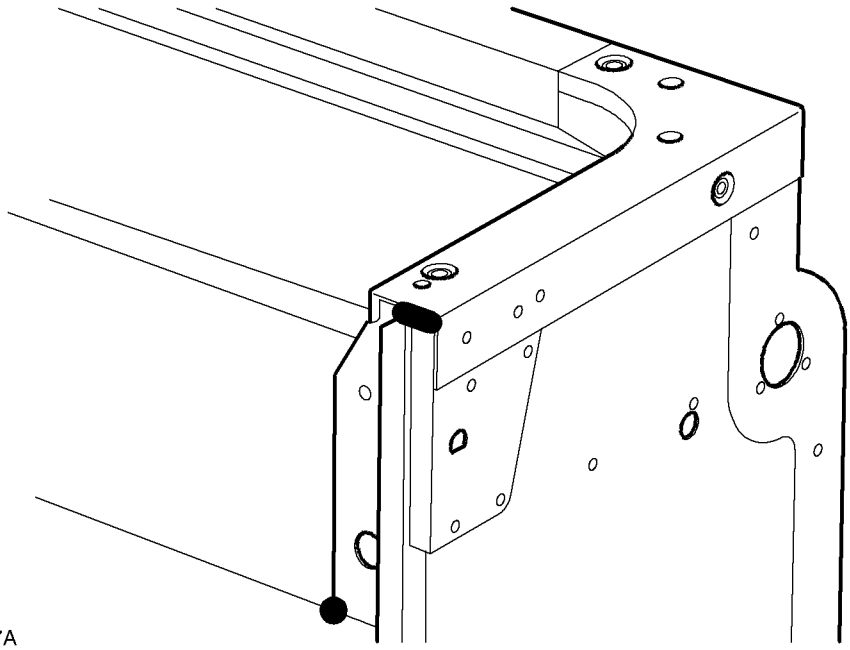

M77 2087A

Putty location on underside of vehicle

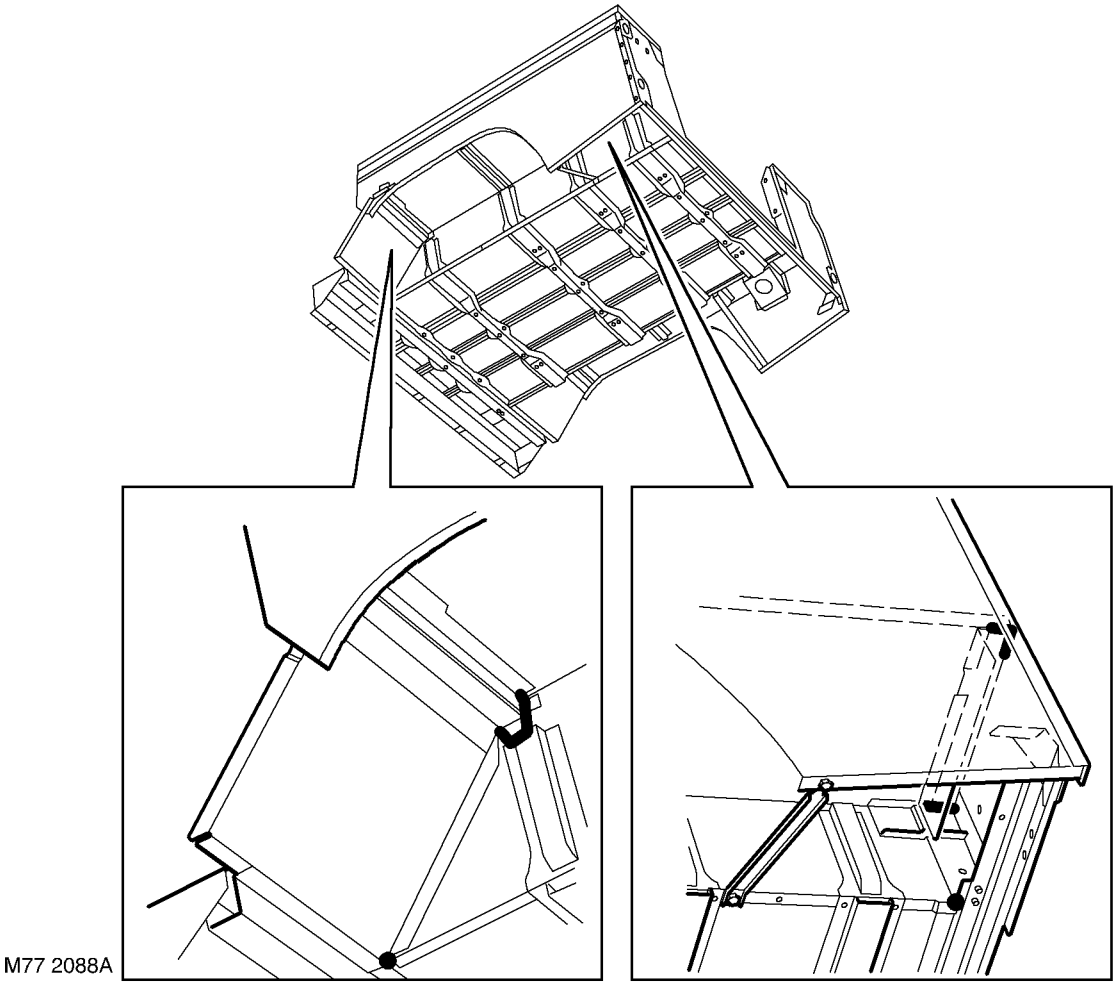

Putty location on front door

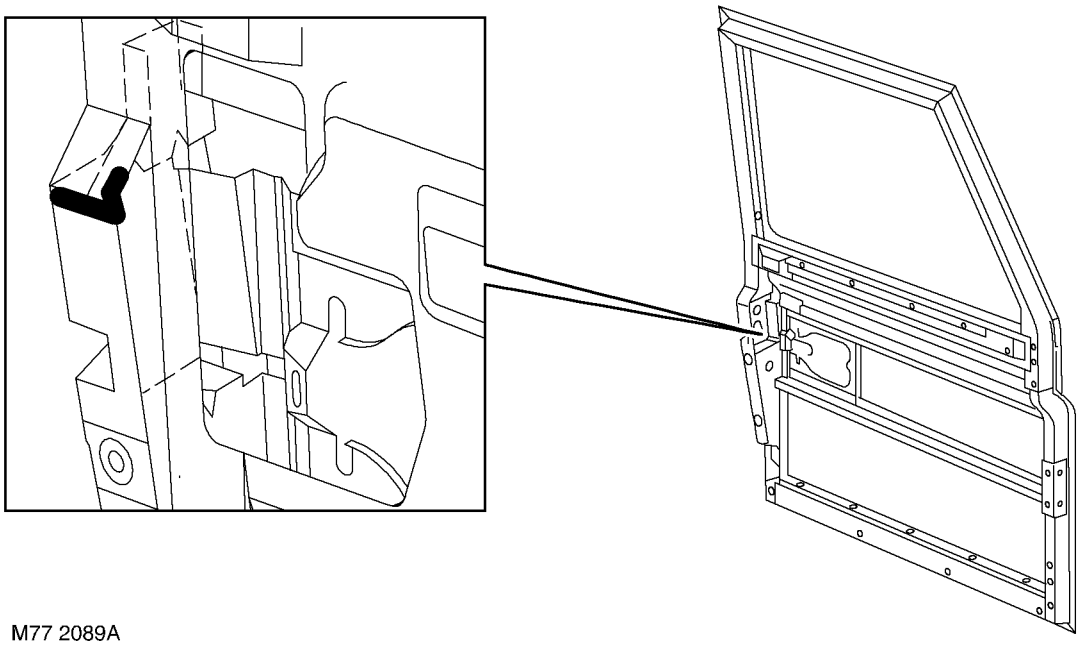

M77 2089A

FOAM/RUBBER SEAL APPLICATION AREAS

The following Illustrations show the location of foam/rubber seals. All areas
All areas symmetrically opposite to those shown are also treated.

Body side rear

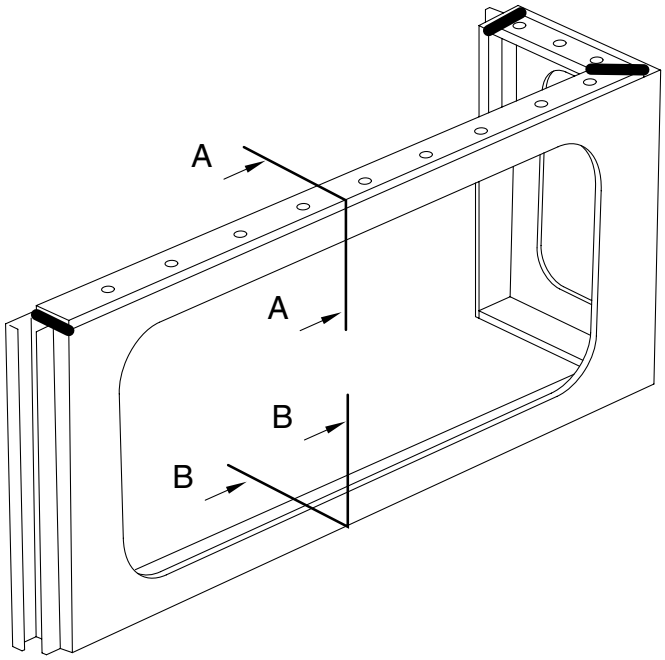

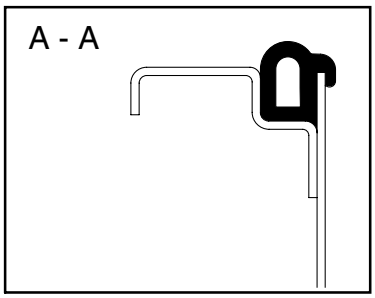

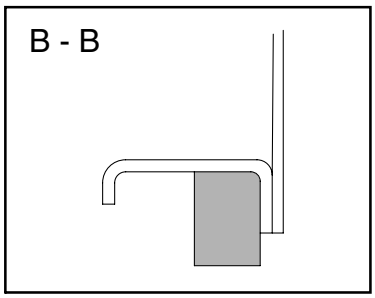

M77 2093A

Section A-A shows a rubber seal in position on the body side rear upper assembly.

CAUTION: Ensure rubber seal is correctly seated into channel.

Section B-B shows a foam seal located on the bottom edge of the body side rear upper assembly. It is fixed to the panel using double sided tape.

Body side lower

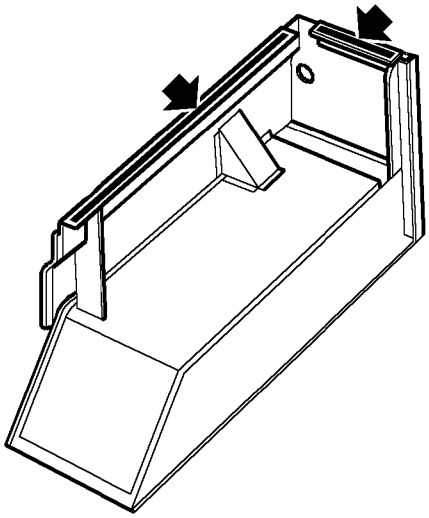

M77 2080A

The arrows indicate the positon of two foam seals.

CAUTION: Ensure seals are fitted before refitting assembly.

WATER LEAKS

Sealing charts in this section show those areas of the bodyshell most likely to be affected by accident damage and water leaks, and which could therefore require re-treatment in repair. They do not show those joint areas which only apply to factory assembly operations and which are unlikely to be disturbed in service (e.g. centre tunnel), or where the damage would be so severe that the entire bodyshell would normally be written off.

When water leakage occurs, always adopt a logical approach to the problem using a combination of skill, experience and intuition. Do not attempt to reach a conclusion based only on visual evidence, such as assuming that a leak emanates from the windscreen because the footwell is wet. It will often be found that the source of the leak is elsewhere. The correct procedure will increase the chance of locating a leak, however obscure it may seem.

Tools and Equipment

The following tools and equipment are recommended for detection and rectification of water leaks:

1. Garden sprayer (hand-operated).
2. Wet/dry vacuum cleaner.
3. Dry absorbent cloths.
4. Battery torch.
5. Small mirror.
6. Weatherstrip locating tool.
7. Trim panel remover.
8. Small wooden or plastic wedges.
9. Dry compressed air supply.
10. Hot air blower.
11. Sealer applicators.
12. Ultrasonic leak detector.

During leak detection, the vehicle should be considered in three basic sections:

- The front interior space,
- The rear passenger space (where applicable), and
- The rear loadspace or boot.

Testing

From the information supplied by the customer it should be possible for the bodyshop operator to locate the starting point from which the leak may be detected. After the area of the leak has been identified, find the actual point of entry into the vehicle. A simple and effective means initially is an ordinary garden spray with provision for pressure and jet adjustment. This will allow water to be directed in a jet or turned into a fine spray. Use a mirror and a battery-powered torch (NOT a mains voltage inspection lamp) to see into dark corners.

The sequence of testing is particularly important. Start at the lowest point and work slowly upwards, to avoid testing in one area while masking the leak in another. For example, if testing started at the level of the windscreen, any water cascading into the plenum chamber could leak through a bulkhead grommet and into the footwells. Even at this point it could still be wrongly assumed that the windscreen seal was at fault.

Another important part of identifying a water leak is by visual examination of door aperture seals, grommets and weatherstrips for damage, deterioration or misalignment, together with the fit of the door itself against the seals.

Sealing

When the point of the leak has been detected, proceed to rectify it using the following procedure:

1. Renew all door aperture seals and weatherstrips which have suffered damage, misalignment or deterioration.
2. Check all body seals to ensure that they are correctly located on their mounting flanges/faces using a locating tool if necessary.
3. Dry out body seams to be treated using compressed air and/or a hot air blower as necessary.
4. Apply sealant on the outside of the joint wherever possible to ensure the exclusion of water.
5. When rectifying leaks between a screen glass and its weatherstrip (or in the case of direct glazing, between the glass and bodywork), avoid removing the glass if possible. Apply the approved material either at the glass to weatherstrip or glass to body.

SERVICEABLE PANELS

Front end panels

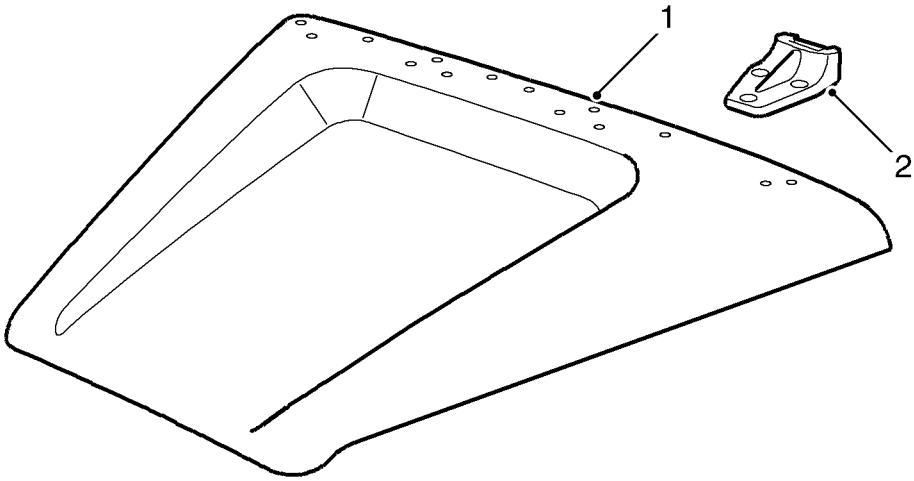

M77 2097A

1. Bonnet
2. Hinges

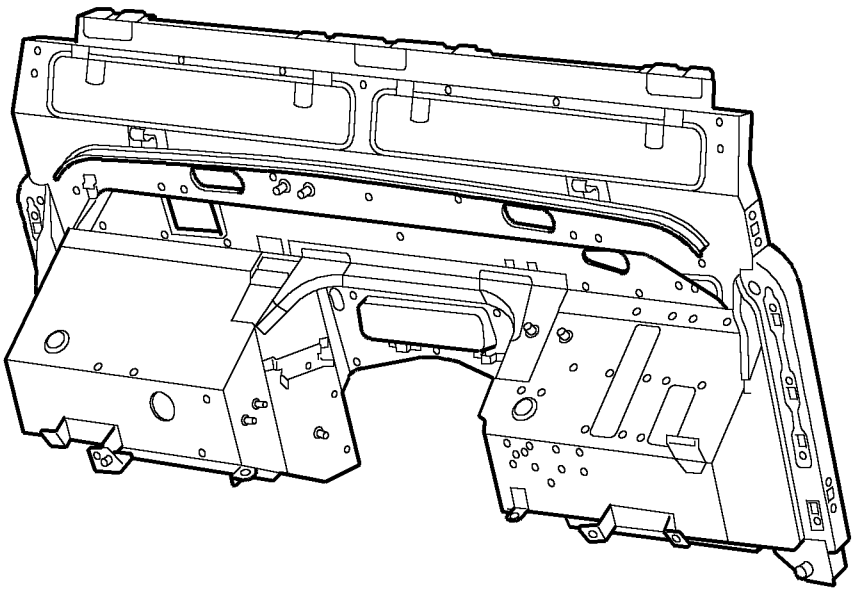

M77 2076A

3. Bulkhead assembly

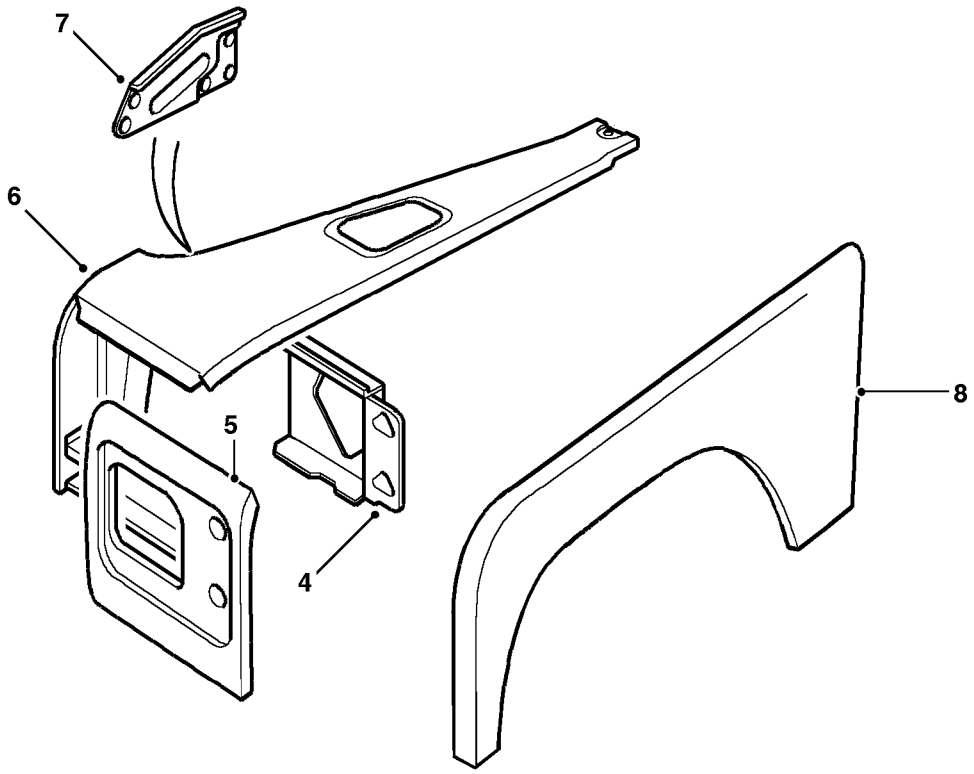

M77 2095B

4. Headlamp mounting panel - inner
5. Headlamp mounting panel - outer
6. Wing upper
7. Headlamp reinforcement panel
8. Wing lower

Body side panels

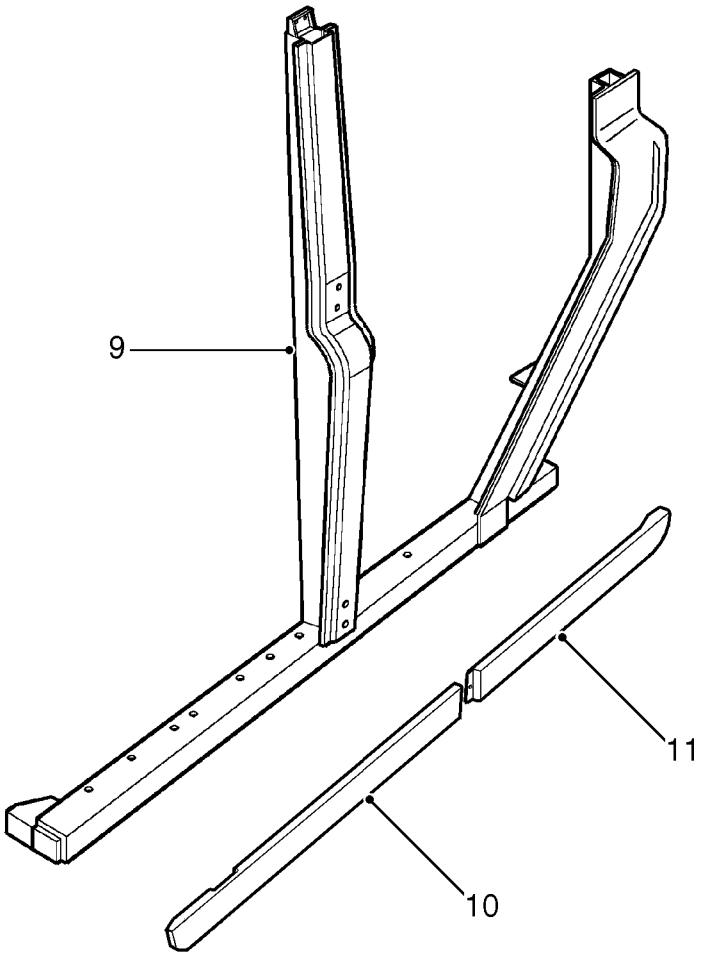

M77 2110A

9. ’B/C’ and ’D’ post assembly
10. Sill panel - front
11. Sill panel - rear

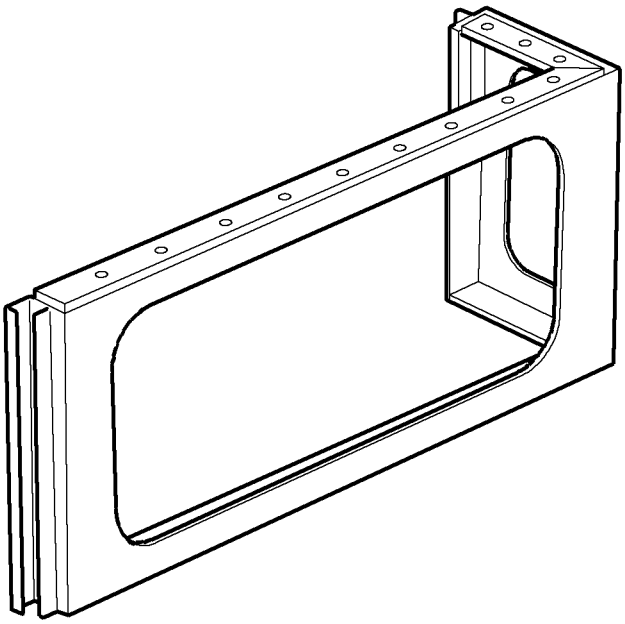

M77 2104A

12. Body side rear - upper

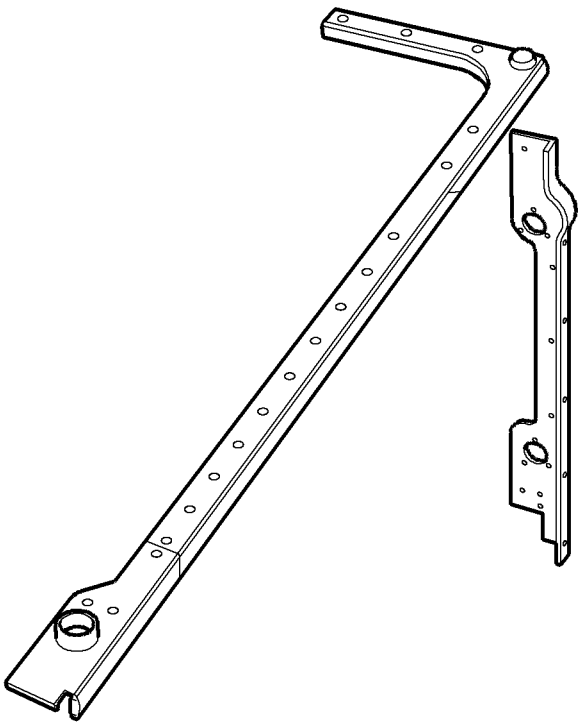

M77 2100A

13. Body side cappings

Rear end panels

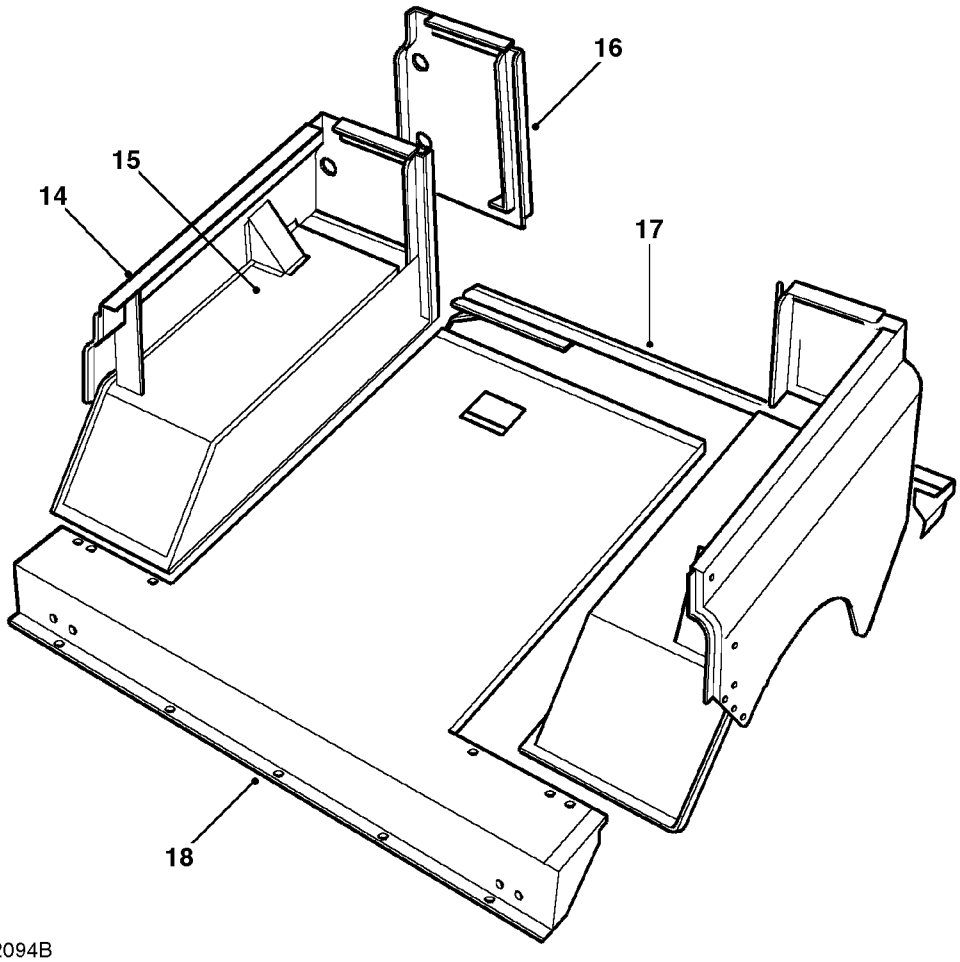

M77 2094B

14. Body side panel - lower
15. Body side panel - lower - assembly
16. Rear lamp panel
17. Rear panel
18. Rear floor

Door Assemblies

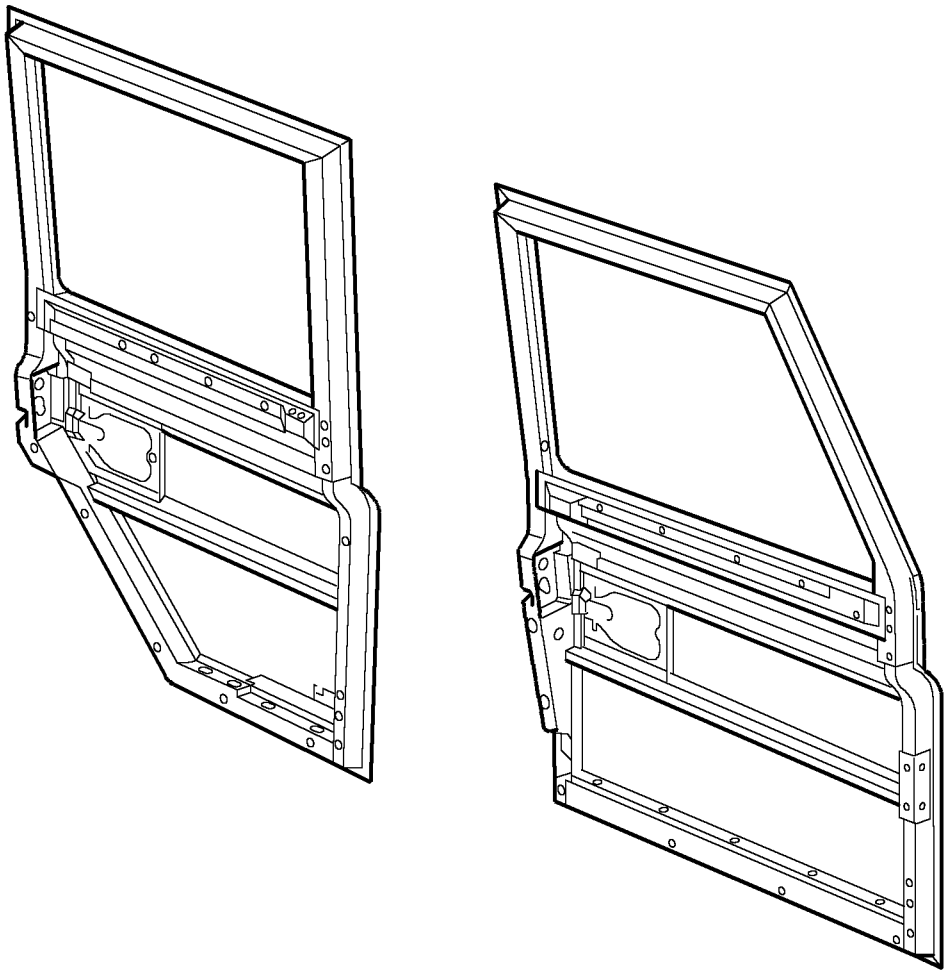

M77 2077A

From 02MY the taildoor skin is one panel.

Roof

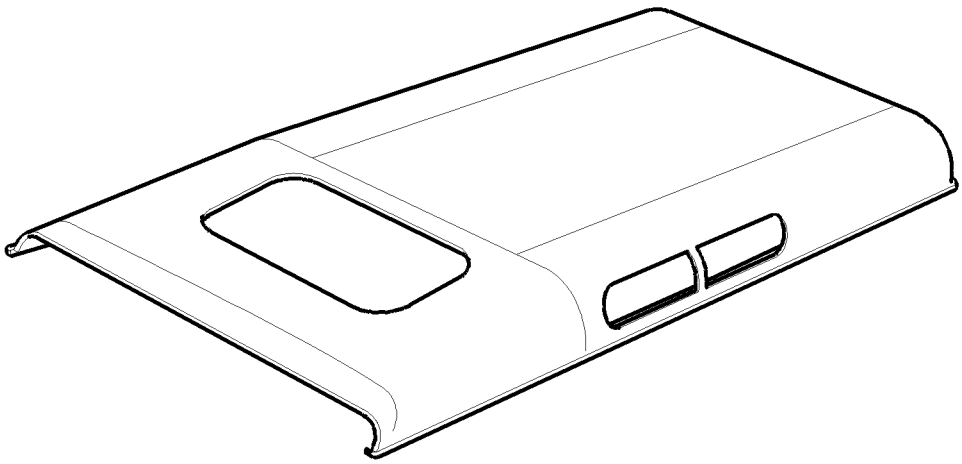

M77 2092A

GENERAL WELDING PRECAUTIONS

The following pages show the procedures to follow when using welding for repairs. No resistance spot welds have been used in any of the repairs.

The Aluminium alloy used on all Defender models is a combination of Aluminium and Magnesium.
When converting a MIG welder for use on Aluminium it is essential the following components are changed. The materials shown in brackets are the correct materials to use:

- Torch liner (Teflon or Carbon Fibre)
- Contact tip
- Feed rollers/wheels
- Correct Filler wire (combination of Aluminium and Magnesium)
- Shielding gas (Argon)

When carrying out welding operations the following criteria must be observed:

- Where resistance spot welds have been used in production, these must be replaced with either MIG plug welds or rivets.
- To replace each production spot weld an 8 mm (0.31 in) hole must be drilled and/or punched, and a MIG weld then made in its place. The number of plug welds must match exactly the number of spot welds which have been removed.
- Where holes are left in an existing panel after removal of the spot welds, a single MIG plug weld will be made in each hole as appropriate.
- When MIG welding ensure the correct wire is used.
- The replacement welds in the welding diagrams are denoted by the following symbols:

M77 2122

A. MIG Plug welds

B. MIG seam weld

Seat Belt Anchorages
Seat belt anchorages are safety critical. When making repairs in these areas it is essential to follow design specifications.

Where possible, the original production assembly should be used, complete with its seat belt anchorages, or the cut line should be so arranged that the original seatbelt anchorage is not disturbed.

All welds within 250mm (9.9in.) of seat belt anchorages must be carefully checked for weld quality, including spacing of spot welds. A crack detection process must be carried out in these areas.

WARNING: Body parts incorporating seat belt anchorages MUST be renewed completely if damaged beyond repair, as the welds in these areas are safety critical and cannot be disturbed.

PANEL REPLACEMENT PROCEDURE

General
This information is designed to explain the basic panel removal and replacement method. This standard method may vary slightly from one vehicle to another. The main criterion in removal and replacement of body panels is that Land Rover's original standard is maintained as far as possible.
All repair processes and procedures shown relate to Aluminium panels.

Remove Panel

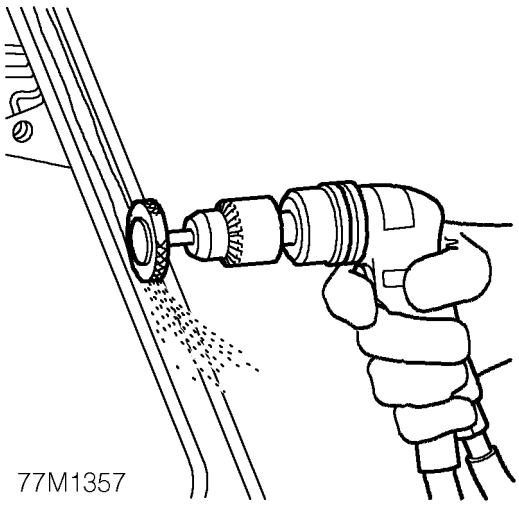

1. Expose resistance spot welds. For those spot welds which are not obviously visible, use a rotary drum sander or wire brush fitted to an air drill, or alternatively a hand held wire brush.

WARNING: Ensure breathing mask and protective glasses are worn during operations where Aluminium particles are removed.

CAUTION: Never use a sanding disc that has previously been used on steel, as iron deposits could be left on the surface of the Aluminium.

NOTE: In wheel arch areas it may be necessary to soften underbody coating using a hot air gun, prior to exposing spot welds.

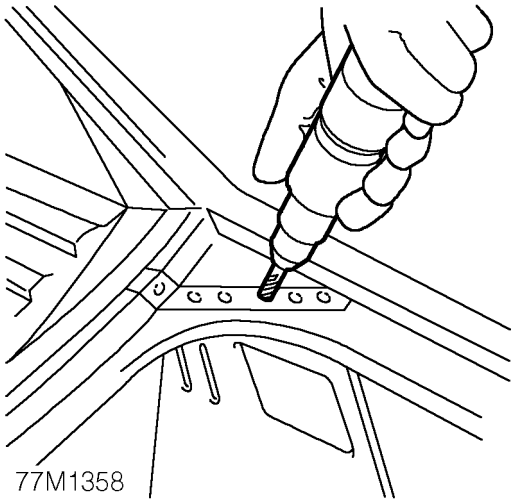

2. Cut out welds using a cobalt drill.

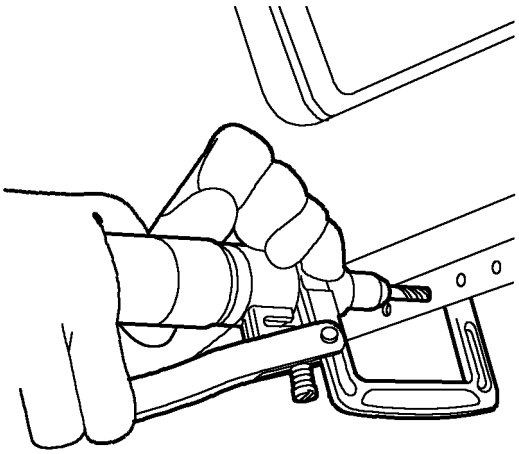

3. Alternatively use a clamp-type spot weld remover.

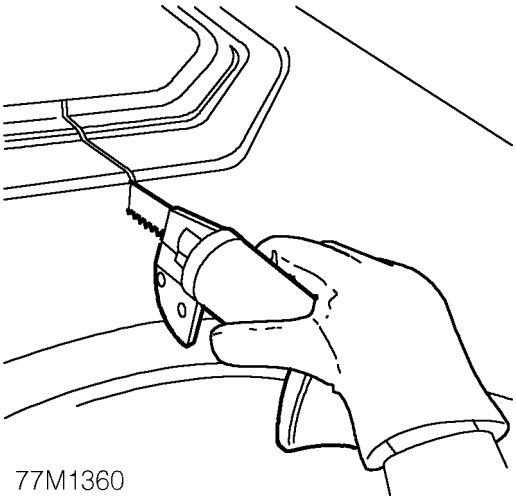

4. Cut away the bulk of the panel as necessary using an air saw.

NOTE: On certain panel joints MIG welds and braze should be removed using a sander where possible, before cutting out the panel bulk.

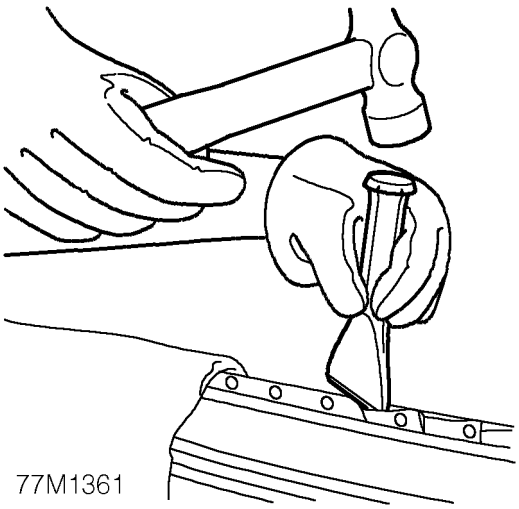

5. Separate spot welded joints and remove panel remnants using hammer, bolster chisel and pincers.

Prepare Old Surfaces

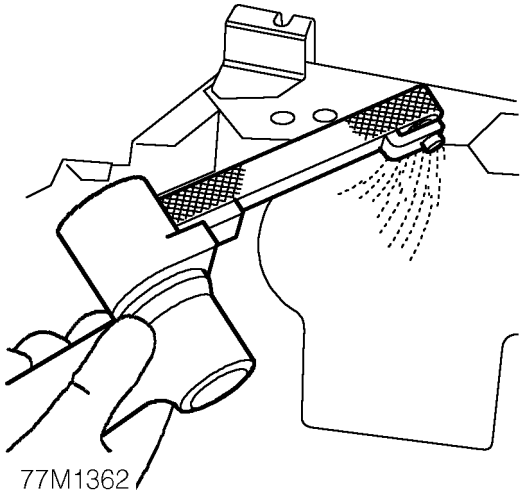

6. Clean all panel joint edges to a bright smooth finish, using a belt-type sander.

NOTE: Prior to sanding, remove remaining sealant using a hot air gun to minimise the risk of toxic fumes caused by generated heat.

WARNING: Care must be taken to avoid excessive heat build up which may be caused by this equipment.

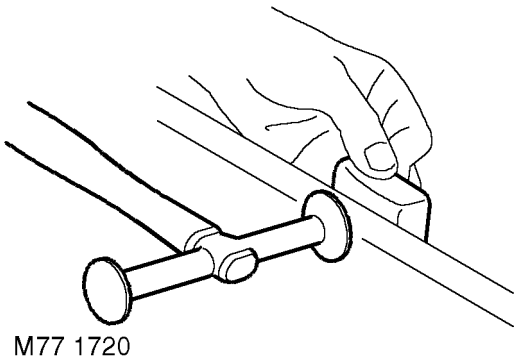

7. Straighten existing joint edges using shaping block and hammer.

CAUTION: Where significant straightening is required, heat must be applied to the area to avoid stretching the Aluminium.

CAUTION: All tools used for working with Aluminium must be kept separate from those used on steel.

Prepare New Surfaces

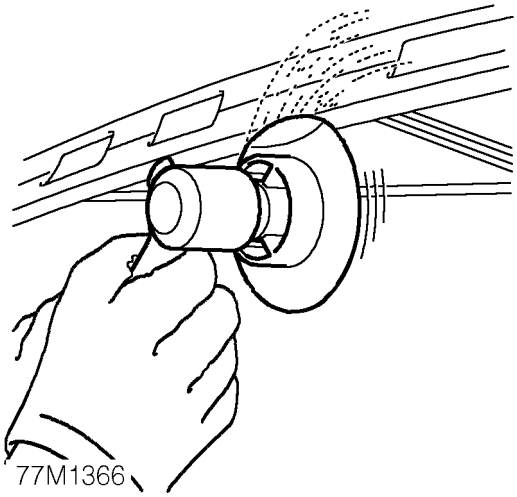

8. Prepare new panel joint edges for welding by sanding to a bright finish. This must include inner as well as outer faces.
9. Drill holes in new panel, in the equivalant spot weld positions.

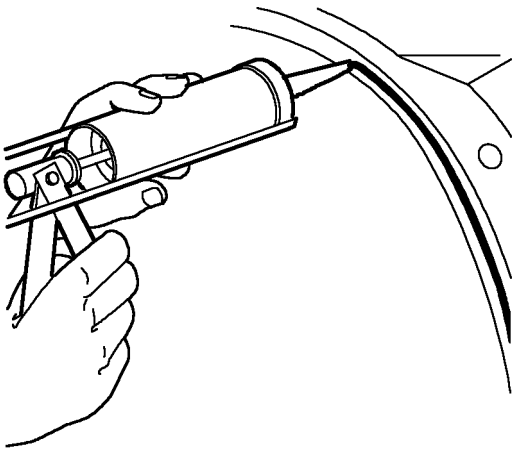

10. Apply adhesive sealant to panel joint surfaces.
11. All mating faces that have sealant applied to them must be cleaned using a suitable solvent. The majority of Aluminium sealants have a primer/pre-treatment included with them.

CAUTION: Do not use Petroleum Spirit, Alcohol or Paint Thinners to clean mating faces.

Offer Up and Align

Offer up new panel and align with associated panels. Clamp into position using welding clamps or Mole grips. Where a joggle or brace joint is being adopted, make a set in the original panel joint edge or insert a brace behind the joint.

NOTE: In cases where access for welding clamps is difficult, it may be necessary to use tack welds.

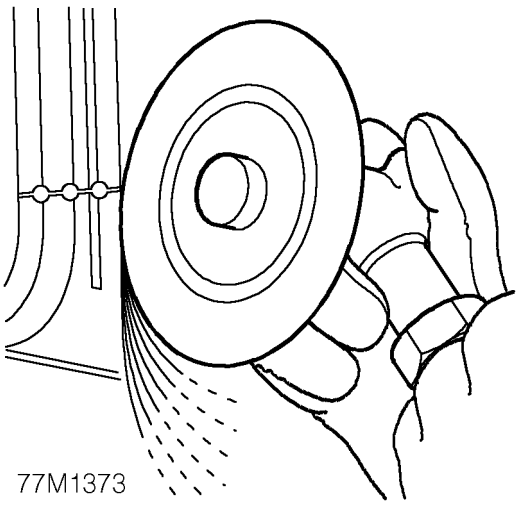

12. Dress MIG tack welds using a sander with 36 grit disc, or a belt-type sander where access is limited.

Welding

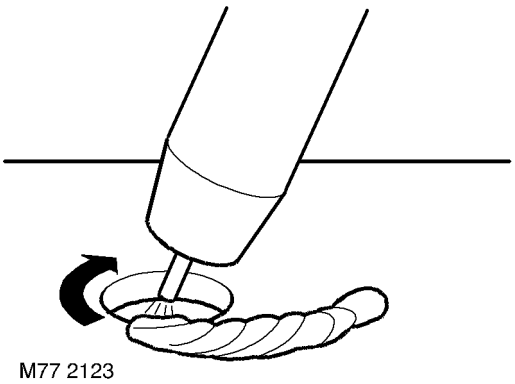

13. When plug welding, begin weld approximately 15 mm (0.6 ') from hole. This will allow the weld area to be preheated which will enhance weld penetration. It also allows the operator to see more easily where penetration takes place. Fill hole with weld by moving in a circular direction around the hole.

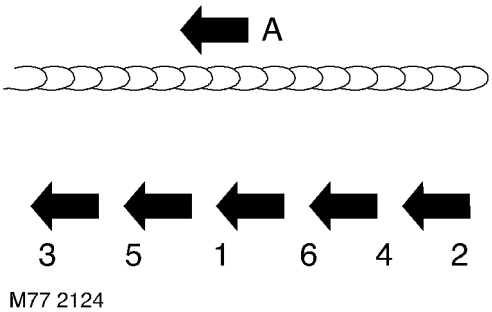

14. When MIG seam welding do not carry out lengthy operations. Divide the welds into short operations, this will reduce the chances of overheating the workpiece which inturn will avoid distortion and strain.

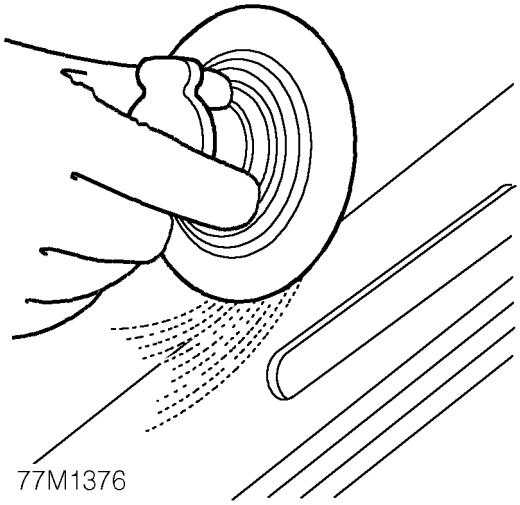

15. Dress all welds using a sander with 36 grit disc, or a belt-type sander and/or wire brush.

CAUTION: Only use a Stainless Steel wire brush for Aluminium.

REPAIR PROCEDURES

Body Trim
The following panel repair operations itemise body trim components which must be removed for access during each repair. **See Repairs section.**

Because of the unpredictable nature of accident damage, the items listed make no allowance for any difficulties which may be found in removal and only apply to an undamaged vehicle. No allowance is made for any difficulties which may be found during panel removal. Damaged body trim items must be renewed as necessary following body repairs.

WING LOWER FRONT

Remove

1. Disconnect both battery leads, negative lead first. system.
2. Remove wheel arch eyebrow.
3. Remove wheel arch liner.
4. **RH side:** Remove aerial.
5. Remove air intake hose.
6. Remove bolts securing lower wing.

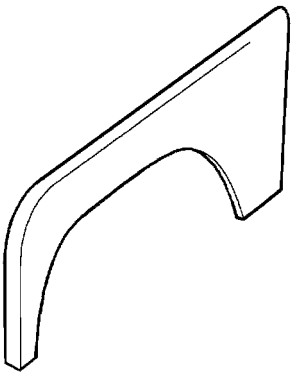

M77 2098A

Refit

7. Prepare and clean panel joint faces.
8. Reverse removal procedure.

HEADLAMP MOUNTING PANEL

Remove

1. Disconnect both battery leads, negative lead first.
2. Disconnect all ECUs.
3. Remove radiator. ***See COOLING SYSTEM, Repair.***
4. Recover refrigerant from A/C system. ***See AIR CONDITIONING, Repair.***
5. Remove headlamp. ***See ELECTRICAL, Repair.***
6. **LH side:** Remove screen washer bottle. ***See WIPERS AND WASHERS, Repair.***
7. **RH side:** Position PAS reservoir aside.
8. Remove bolts and release welds securing panel, remove panel.

Refit

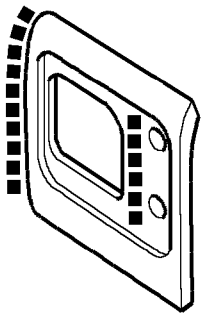

M77 2096A

9. Prepare and clean panel joint faces. Punch or drill holes in new panel for plug welding as shown.
10. Reverse removal procedure.

WING UPPER - LH

Remove

1. Disconnect both battery leads, negative lead first.
2. Remove headlamp. ***See ELECTRICAL, Repair.***
3. Remove headlamp mounting panel. ***See this Section.***
4. Remove radiator. ***See COOLING SYSTEM, Repair.***
5. Recover refrigerant from A/C system. ***See AIR CONDITIONING, Repair.***
6. Remove receiver drier. ***See AIR CONDITIONING, Repair.***
7. Remove relevant A/C pipes.
8. Remove relevant heater intake pipes.
9. Remove screen washer bottle.
10. Remove wheel arch liner. ***See CHASSIS AND BODY, Repair.***
11. Remove bolts and release welds securing panel, remove panel.

Refit

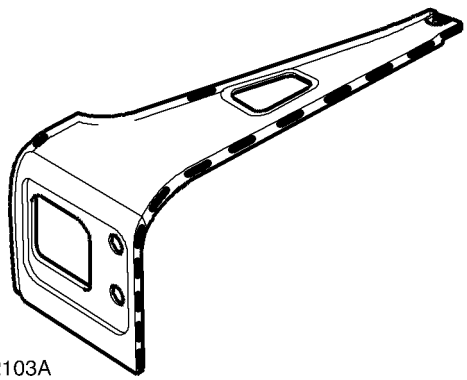

12. Prepare and clean panel joint faces.
13. Reverse removal procedure.
14. Align headlamps. ***See ELECTRICAL, Adjustment.***

WING UPPER - RH

Remove

1. Disconnect both battery leads, negative lead first.
2. Remove headlamp. ***See ELECTRICAL, Repair.***
3. Remove headlamp mounting panel. ***See this Section.***
4. Remove radiator. ***See COOLING SYSTEM, Repair.***
5. Recover refrigerant from A/C system. ***See AIR CONDITIONING, Repair.***
6. Remove relevant A/C pipes.
7. Position PAS reservoir aside.
8. Remove wheel arch liner. ***See CHASSIS AND BODY, Repair.***
9. Remove aerial.
10. Remove vacuum solenoid valve.
11. Release clips securing coolant reservoir.
12. Remove bolts and release welds securing panel, remove panel.

Refit

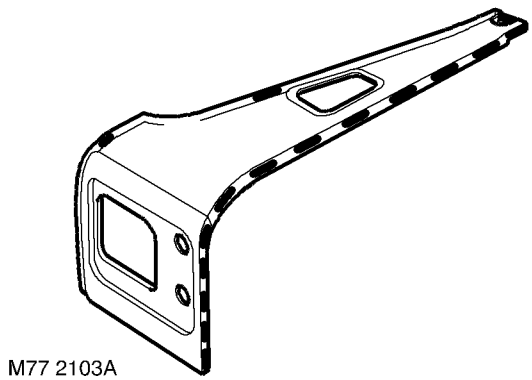

13. Prepare and clean panel joint faces.

NOTE: LH panel shown

14. Reverse removal procedure.
15. Align headlamps. ***See ELECTRICAL, Adjustment.***

WHEEL ARCH - FRONT

Remove

The procedure to change the Inner Front Wheelarch is the same as for the Wing Upper, except for removal of the ABS sensors and shield, if fitted.

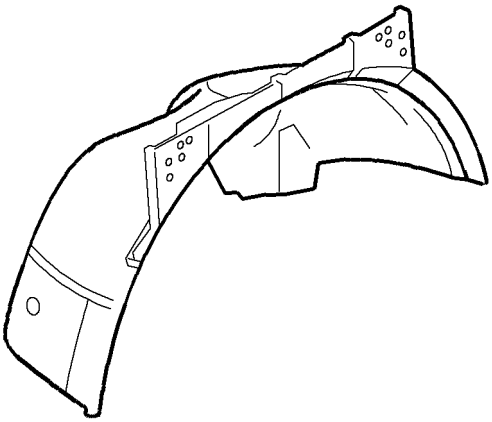

M77 2130

BULKHEAD ASSEMBLY

Remove

1. Disconnect both battery leads, negative lead first.
2. Remove front lower wing. ***See this Section.***
3. Remove RH and LH front upper wing. ***See this Section.***
4. Remove headlamp mounting panels. ***See this Section.***
5. Remove screen aperture. ***See this Section.***
6. Remove both front doors.
7. Remove lower fascia panel. ***See CHASSIS AND BODY, Repair.***
8. **Models with A/C:** Remove relevant A/C pipes.
9. Remove front grille.
10. Drain cooling system. ***See COOLING SYSTEM, Adjustment.***
11. Remove radiator and intercooler.
12. **Models with A/C:** Remove condensor.
13. Remove air cleaner assembly.
14. Remove heater unit. ***See HEATING AND VENTILATION, Repair.***
15. Remove brake servo assembly.
16. Remove heater ducts.
17. Remove both front seats.
18. Remove front carpets.
19. Release all relevant harnesses and position aside.
20. Remove facia support bracket.

Refit

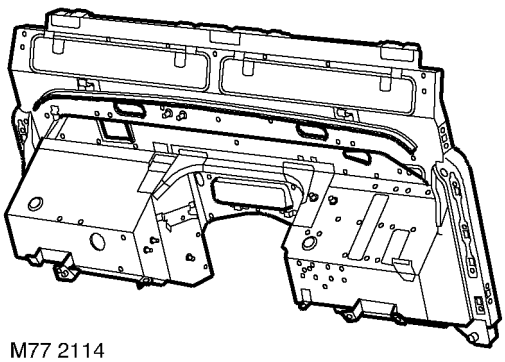

M77 2114

21. Prepare and clean panel joint faces. Ensure all necessary grommets and sealant is applied to new bulkhead.
22. Reverse removal procedure.
23. Bleed brake system. ***See BRAKES, Adjustment.***
24. Align headlamps. ***See ELECTRICAL, Adjustment.***
25. Water test after refitting.

SCREEN APERTURE

Remove

1. Disconnect both battery leads, negative lead first.
2. Raise side of vehicle.
3. Remove front and centre headlining sections.
4. Remove both 'A' post upper trims.
5. Remove front door aperture seals.
6. Release upper front corner of rear door aperture seal.
7. Remove both wiper arms. ***See WIPERS AND WASHERS, Repair.***
8. Remove front screen.
9. Remove all roof fixings, back to the 'B/C' post.
10. Release sealant securing front edge of roof.

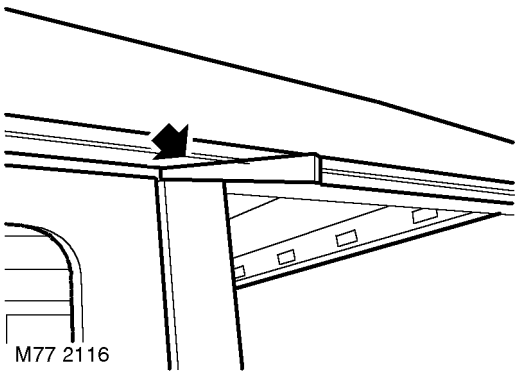

11. Insert wedges into top of both 'B/C' posts. This will allow access for removal of screen aperture.
12. With assistance remove screen aperture.

Refit

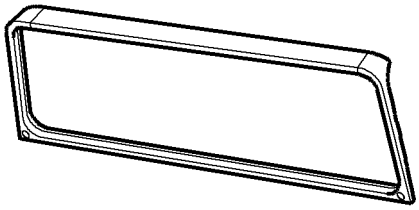

13. Prepare and clean panel joint faces.
14. Reverse removal procedure. Fit new foam seal to top edge of aperture.

NOTE: When refitting, ensure screen aperture is correctly fitted onto location pins in bulkhead.

15. When applying sealant to top edge of aperture, the correct colour sealant must be used, see note below.

NOTE: White roof vehicles use a white sealant. Coloured roof vehicles use a black sealant.

SILL - FRONT

Remove

NOTE: The procedure to replace the rear sill section is the same as the front.

1. Remove bolts securing sill to body, discard seal.

Refit

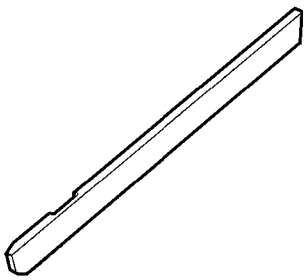

M77 2111

NOTE: Front sill

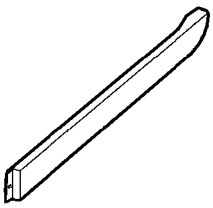

M77 2112

NOTE: Rear sill

2. Prepare and clean panel joint faces. Refit new seal.
3. Reverse removal procedure.

'B/C' & 'D' POST

Remove

1. Disconnect both battery leads, negative lead first.
2. Remove rear door and striker.
3. Remove front seat belt reel. ***See CHASSIS AND BODY, Repair.***
4. Remove front and rear carpets.
5. Remove front seat.
6. Remove rear seat.
7. Remove front, centre and rear sections of headlining.

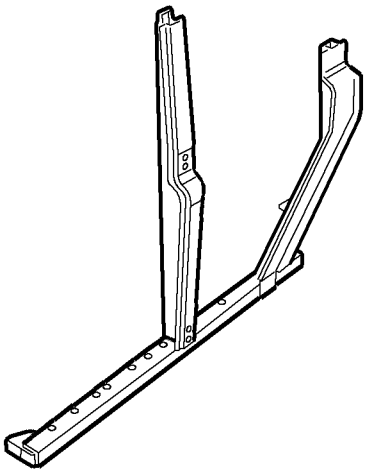

M77 2113

NOTE: Assembly is held on with bolts.

Refit

8. Prepare and clean panel joint faces.
9. Reverse removal procedure.

CORNER CAPPING

The Corner Capping is not replaced as a single panel. It is replaced in conjunction with either the Body Side Lower Panel or Body Side Assembly. The procedure to replace the Corner Capping is shown in the Body Side Lower Panel procedure.

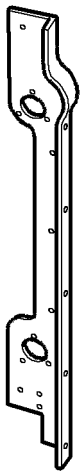

M77 2102A

BODY SIDE CAPPING

The Body Side Capping is not replaced as a single panel. It is replaced in conjunction with either the Body Side Lower Panel or Body Side Assembly. The procedure to replace the Body Side Capping is shown in the Body Side Lower Panel procedure.

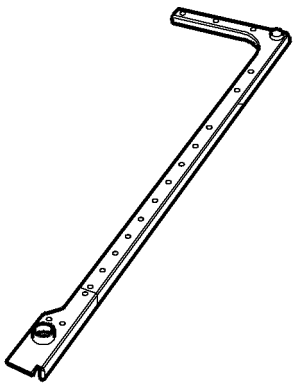

M77 2101A

BODY SIDE REAR - UPPER

Remove

1. Disconnect both battery leads, negative lead first.
2. Remove front, centre and rear sections of headlining.
3. Release upper edge of front door aperture seal.
4. Release upper edge of rear door aperture seal.
5. Remove fixings from front edge of roof, and along side being replaced.
6. Release sealant securing front edge of roof.

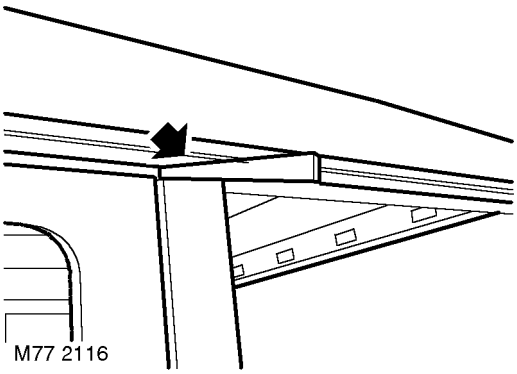

M77 2116

7. Insert wedges into top of both ’B/C’ posts. This will allow access for removal of body side.
8. **RH side:** Remove tail door. ***See CHASSIS AND BODY, Repair.***
9. Remove side window.
10. Remove rear sixth light.
11. Remove all bolts securing upper body side.

Refit

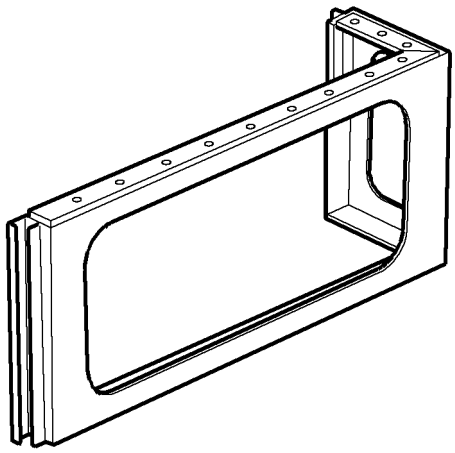

M77 2117

12. Prepare and clean panel joint faces.
13. Reverse removal procedure.

NOTE: When refitting, ensure body side upper is correctly fitted onto location pins.

BODY SIDE REAR - LOWER - ASSEMBLY

In this procedure the Body Side Capping and the Corner Capping are also changed.

Remove

1. Disconnect both battery leads, negative lead first.
2. Remove body side upper rear. ***See this Section.***
3. Remove all rear lamps and reflectors.
4. **LH side:** Remove number plate and lamp.
5. **LH side:** Remove tail door striker.
6. **RH side:** Remove fuel filler and grommet.
7. Remove all bolts and rivets securing lower body side assembly.

Refit

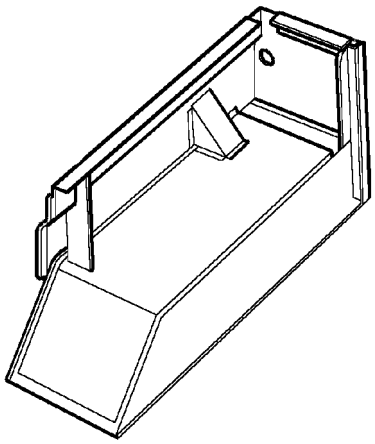

M77 2121

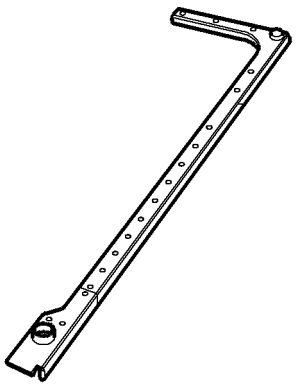

M77 2101A

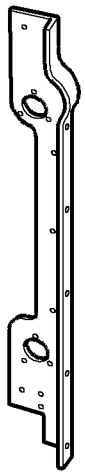

M77 2102A

8. Prepare and clean panel joint faces.
9. Reverse removal procedure.

NOTE: When refitting, ensure body side upper is correctly fitted onto location pins.

BODY SIDE REAR - PANEL

Remove

In this procedure the Body Side Capping and the Corner Capping are also changed.

1. Disconnect both battery leads, negative lead first.
2. Remove body side upper rear. ***See this Section.***
3. Remove rear lamp panel. ***See this Section.***
4. **LH side:** Remove number plate and lamp.
5. **LH side:** Remove tail door striker.
6. **RH side:** Remove fuel filler and grommet.

Refit

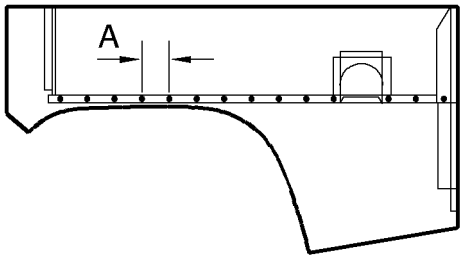

M77 2120

7. Prepare and clean panel joint faces. Drill holes in new body side lower panel for riveting. Spacing of holes, dimension 'A' = 100 mm (3.937'). In conjunction with the rivets apply suitable adhesive.

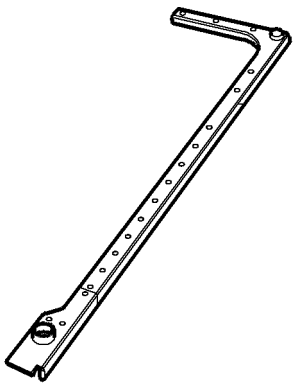

M77 2101A

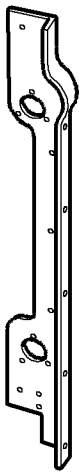

M77 2102A

8. Prepare and clean panel joint faces.
9. Reverse removal procedure.

NOTE: When refitting, ensure body side upper is correctly fitted onto location pins.

REAR LAMP PANEL

Remove

1. Disconnect both battery leads, negative lead first.
2. Disconnect alternator.
3. Remove rear bench seat.
4. **RH side:** Remove tail door. ***See CHASSIS AND BODY, Repair.***
5. Remove rear lights and reflector.
6. **LH side:** Remove number plate and tail door striker.

Refit

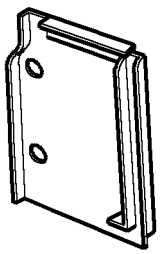

M77 2118

7. Prepare and clean panel joint faces.
8. Reverse removal procedure.

REAR CROSSMEMBER PANEL

Remove

1. Disconnect both battery leads, negative lead first.
2. Remove both rear lamp panels. ***See this Section.***

Refit

M77 2125

3. Prepare and clean panel joint faces.
4. Reverse removal procedure.

ROOF ASSEMBLY

Remove

1. Disconnect both battery leads, negative lead first.
2. Remove rear bench seats.
3. Remove front, centre and rear sections of headlining.
4. Remove all bolts securing roof.

NOTE: Carefully cut sealant securing front edge of roof to windscreen aperture.

Refit

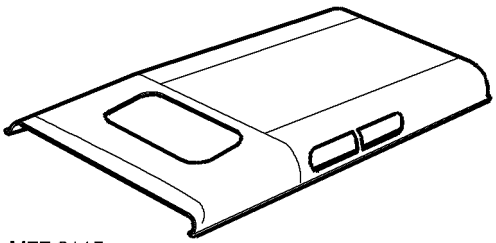

M77 2115

5. Prepare and clean panel joint faces.
6. Reverse removal procedure.

TIME SCHEDULES

The following information shows the total time taken to replace single panels and complete assemblies. This time includes removal of Mechanical, Electrical and Trim (MET) items, plus paint times based on Metallic Clear Over Base Paint.

The times shown were generated by Thatcham (the Motor Insurance Repair and Research Centre) and are to be used as a guide only. The operations were carried out on a 110 Station Wagon.

Panel/assembly replacement times

Panel Description	Total time
Bonnet	6.1
Bulkhead	24.2
Door front - each	7.8
Door rear - each	6.9
Door tail	7.7
Headlamp mounting panel LH	8.4
Headlamp mounting panel RH	8.3
Rear lamp mounting panel	9.3
Front screen aperture	7.4
Roof assembly	18.0
Sill and 'B' post assembly LH	9.4
Sill and 'B' post assembly RH	9.3
Sill panel - front section	4.2
Sill panel - rear section	4.1
Wing front lower	7.0
Wing front upper	8.7
Body side rear assembly - LH	16.7
Body side rear assembly - RH	17.7
Body side lower panel - LH	17.6
Body side lower panel - RH	18.6

Combination panel replacement times

The following panel combination times show the total time to remove/refit body panels, MET items and any paint processes.

Front end combination panel times

Panel Description	Total Time
Grille Bumper front Wheelarch eyebrow Wing - upper Wing - lower	12.7 LH 12.6 RH
Grille Bumper front Wheelarch eyebrow LH & RH Wing - upper LH & RH Wing - lower LH & RH	18.2
Grille Bumper front Wheelarch eyebrow Wheelarch front Wing - upper Wing - lower	13.1 LH 13.0 RH
Grille Bumper front Wheelarch eyebrow LH & RH Wheelarch front LH & RH Wing - upper LH & RH Wing - lower LH & RH	19.0

Bodyside combination panel times

Panel description	Total time
Front door Wheelarch eyebrow Wing - lower Wing - upper	15.4 LH 15.5 RH
Front door Rear door Sill and ’B’ post	16.6 LH 16.5 RH
Rear door Body side lower assembly Body side upper assembly Wheel arch eyebrow ’D’ post outer reinforcement Corner capping Rear lamp panel	31.0 LH 32.1 RH
Rear door Front door Wing lower Wing upper Body side lower assembly Body side upper assembly Wheel arch eyebrow - front & rear ’D’ post outer reinforcement Corner capping Rear lamp panel	41.9 LH 42.8 RH

Rear end combination panel times

Panel description	Total time
Corner capping Rear lamp panel	11.0
Body side lower assembly Body side upper assembly Wheel arch eyebrow ’D’ post outer reinforcement Corner capping Rear lamp panel Rear panel	28.9 LH 29.9 RH
Body side lower assembly Body side upper assembly Wheel arch eyebrow ’D’ post outer reinforcement Corner capping Rear lamp panel Rear panel	28.5 LH 29.4 RH

PAINT PROCEDURES

Replacement Panels

Service panels are supplied with a cathodic primer coating as part of the panel protection, and in compliance with the vehicle's Corrosion Warranty where applicable. **DO NOT remove this primer before paint refinishing. In the event of localised surface damage or imperfections, ensure that the minimum of primer is removed during rectification work for effective repair.**

Rectify damage by panel beating or straightening. To remove corrosion or paint runs on outer surfaces, abrade primer coat in the affected area as necessary using the following procedure:

1. Clean the panel using a solvent wipe.
2. Treat exposed areas of metal with an etch phosphate process.
3. Re-treat the affected area using either a separate acid-etch primer and two-pack surfacer, or an integrated etch primer/filler.

Bolted Panels

Before fitting bolt-on panels, ensure that all mating and adjacent surfaces on the vehicle and replacement panel are free from damage and distortion. Rectify if necessary as described in this section, and apply preformed strip sealer where specified.

Welded Panels

1. Remove primer from the immediate vicinity of new and existing panel flanges, cleaning to bright metal finish.
2. On joints to be spot welded, apply weld-through zinc rich primer to joint faces of both flanges. Make spot welds while primer is still wet or according to the manufacturer's instructions.
3. Dress accessible weld seams.
4. Clean panel using solvent wipe.
5. Treat bare metal with an etch phosphate process.
6. Re-treat repaired areas.

NOTE: It is not satisfactory to use weld-through, zinc rich primers in conjunction with MIG welding.

Sectioned Panels

When replacing part or sectioned panels, the basic procedure is the same as for welded panels described above, with the following variations:

1. Remove primer from both new and existing joint faces, cleaning to a bright metal finish.
2. Where an overlap joint with the existing panel is to be spot welded, apply weld-through, zinc rich primer to both joint faces and spot weld while the primer is still wet or according to the manufacturer's instructions.
3. MIG weld joints where applicable.
4. Clean the panel with a solvent wipe.
5. Treat bare metal areas using an etch phosphate process.
6. Re-prime affected areas as necessary as for rectifying transit damage. **See this section.**
7. Treat the inner faces of lap or butt joints with a suitable cavity wax. **See Sealing and Corrosion Protection.**

Clinch Panels (eg Door skins etc.)

1. Abrade primer on new and existing panel joint faces, and clean using a solvent wipe.
2. Apply metal-to-metal adhesive where applicable.
3. Where joints are to be spot welded, apply suitable weld-through, zinc rich primer to weld areas.
4. Where joints are to be MIG welded, apply zinc rich primer in adjacent areas **but leave the welded area untreated**.
5. To retain the panel whilst clinching the flanges, tack spot weld or plug weld as appropriate.
6. Clean the panel with a solvent wipe.
7. Treat bare metal areas with a suitable etch phosphate process.
8. Re-prime affected areas as necessary as for rectifying transit damage. **See this section.**

NOTE: Replacement doors, bonnets and tailgates must be treated with a suitable seam sealer on clinched seams, following the primer coat.

Paint Refinishing

1. Seal all accessible exterior and interior seams with an approved seam sealer. Certain joints such as sill lower flange seams must be left unsealed.
2. Apply a suitable anti-chip primer where specified.
3. Apply a two-pack paint refinishing system.
4. Repair any damage to underbody sealers either at this stage or before paint operations.

Paint Repairs

Before carrying out paintwork repairs, the vehicle must be thoroughly cleaned using either a steam cleaner or high-pressure washer.

Wash locally repaired areas using a mild water-mixable detergent and wipe them clean with solvent, immediately prior to paint application.

Abrade damaged paintwork where bare metal has been exposed until the metal is clean and extends beyond the area of immediate damage. Treat the bare metal with an etch phosphate to remove all traces of rust and provide a key for new paint coats. Re-treat the affected area using either a separate acid-etch primer and two-pack surfacer or an integrated etch primer/filler, and follow with a two-pack paint system. Those surfaces not receiving paint must be treated with a cavity wax following paint operations.

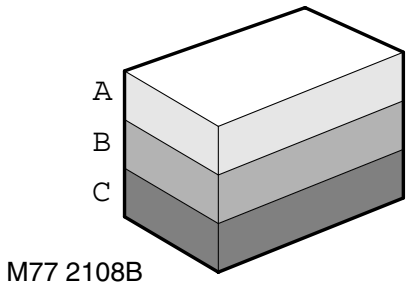

M77 2108B

A. Two-pack top coat

B. Two-pack primer filler and etch primer

C. Etch phosphate

82 - AIR CONDITIONING

CONTENTS

Page

ADJUSTMENT

REFRIGERANT RECOVERY, RECYCLING, RECHARGING 1

REPAIR

COMPRESSOR 1
MOTOR - CONDENSER FAN 2
RECEIVER DRIER 2
RELAY - TEMPERATURE CONTROL - FROM 02MY 3
EVAPORATOR 4

REFRIGERANT RECOVERY, RECYCLING, RECHARGING

Service repair no - 82.30.02

WARNING: The air conditioning system is charged with a high pressure, potentially toxic refrigerant. Repairs or servicing must only be carried out by an operator familiar with both the vehicle system and the charging and testing equipment.

WARNING: All operations must be carried out in a well ventillated area away from open flame and heat sources.

WARNING: Wear eye and hand safety protection.

CAUTION: Overcharging air conditioning system will cause excessive head pressure.

An air conditioning portable Refrigerant Recovery Recycling Recharging Station for use with R134a refrigerant incorporates all the features necessary to recover R134a refrigerant from the air conditioning system; to filter and remove moisture; to evacuate and recharge with the reclaimed refrigerant. The unit can also be used for performance testing and air conditioning system analysis.

The operator must adhere to the equipment manufacturer's instructions.

Refrigerant Recovery

1. Remove dust caps from high and low pressure connectors.
2. Connect high and low pressure hoses to appropriate connections.
3. Open valves on connectors.
4. Turn valves on refrigerant station to correct positions.

NOTE: Operate the refrigerant station in accordance with the manufacturers instructions.

5. Turn Process switch to correct position.
6. Turn Main switch to 'ON'.
7. Allow station to recover refrigerant from system.
8. Close valves on refrigerant station.
9. Turn Main switch to 'OFF'.
10. Close valves on connectors.
11. Disconnect high and low pressure hoses from connectors.
12. Fit dust caps to connectors.
13. Open tap at rear of station to drain refrigerant oil recovered from system.
14. Measure and record quantity of refrigerant oil recovered from system.
15. Close tap at rear of station.

Evacuation

CAUTION: Whenever the refrigerant system is opened, the receiver/drier must be renewed immediately before evacuating and recharging the system.

1. Remove dust caps from high and low pressure connectors.
2. Connect high and low pressure hoses to appropriate connections.
3. Open valves on connectors.
4. Turn valves on refrigerant station to correct positions.
5. Turn Process switch to correct position.
6. Turn Main switch to 'ON'.
7. Allow station to evacuate system.

NOTE: If the vacuum reading is below 700mmHg after 15 minutes, suspect a leak in the system. Partially recharge the system and check for leaks using an electronic leak tester. Check suction lines first, then run the compressor for 5 minutes. Next check the high pressure lines.

NOTE: The system must be evacuated immediately before recharging commences. Delay between evacuation and recharging is not permitted.

Recharging

WARNING: Refrigerant must always be recycled before re-use, to ensure that the purity of the refrigerant is high enough for safe use within the air conditioning system. Recycling should always be carried out with equipment which is design certified by Underwriter Laboratory Inc. for compliance with SAE-J1991. Other equipment may not re-cycle the refrigerant to the required level of purity.

WARNING: A R134a Refrigerant Recovery Recycling Recharging station must not be used with any other type of refrigerant.

WARNING: R134a refrigerant from domestic and commercial sources must not be used in motor vehicle air conditioning systems.

CAUTION: When a major repair has been carried out, a leak test should be carried out using inert gas.

1. Close valves on refrigerant station.
2. Close valve on oil charger.
3. Disconnect yellow hose from refrigerant station.
4. Remove lid from oil charger.
5. Pour correct quantity of refrigerant oil into oil charger.
6. Fit lid to oil charger.
7. Connect yellow hose to refrigerant station.
8. Open valve on oil charger.
9. Move pointer on refrigerant gauge to mark position of refrigerant drop.
10. Slowly open correct valve on refrigerant station and allow vacuum to pull refrigerant into system.
11. Close valve on refrigerant station when correct amount of refrigerant has been drawn into air conditioning system.
12. If the full charge is not accepted by the system, start the engine and run it at 1,500 rev/min for a minimum of 2 minutes. Switch on the air conditioning system, open the vehicle windows, set the temperature control to cold and the blower switch to maximum.
13. Consult Refrigerant station instruction manual for correct procedure to complete the charge.
14. Turn Main switch to ’OFF’.
15. Close valves on connectors.
16. Disconnect high and low pressure hoses from connectors.
17. Fit dust caps to connectors.
18. Carry out performance test on air conditioning system.

COMPRESSOR

Service repair no - 82.10.20

Remove

1. Remove engine acoustic cover. ***See ENGINE , Repair.***
2. Depressurise A/C system. ***See Adjustment.***
3. Remove auxiliary drive belt. ***See ELECTRICAL, Repair.***
4. Drain cooling system. ***See COOLING SYSTEM, Adjustment.***

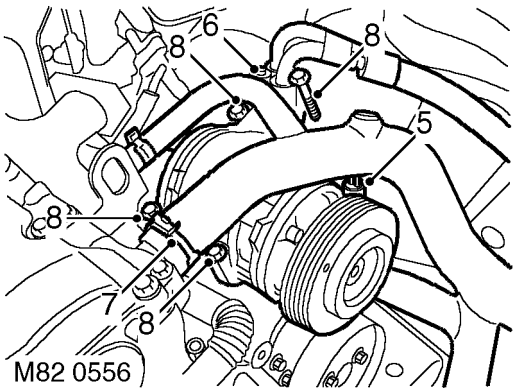

5. Disconnect multiplug from compressor.
6. Remove 2 bolts securing air conditioning pipes to compressor and discard 'O' rings.

CAUTION: Immediately cap all air conditioning pipes to prevent ingress of dirt and moisture into the system.

7. Release clips and disconnect top hose from coolant elbow and heater pipe.
8. Remove 4 bolts securing compressor to mounting bracket.
9. Remove compressor.

Refit

10. Position compressor to mounting bracket and tighten bolts to ***25 Nm (18 lbf.ft)*** .
11. Remove caps from compressor and pipe connections.
12. Clean compressor and pipe connections.
13. Lubricate new 'O'rings with refrigerant oil and fit to compressor.
14. Position A/C pipes to compressor and tighten bolts to ***9 Nm (7 lbf.ft)*** .
15. Connect multiplug to compressor.
16. Position top hose and secure with clips.
17. Refill cooling system. ***See COOLING SYSTEM, Adjustment.***
18. Fit auxiliary drive belt. ***See ELECTRICAL, Repair.***
19. Recharge A/C system. ***See Adjustment.***
20. Fit engine acoustic cover. ***See ENGINE , Repair.***

MOTOR - CONDENSER FAN

Service repair no - 82.15.01

Remove

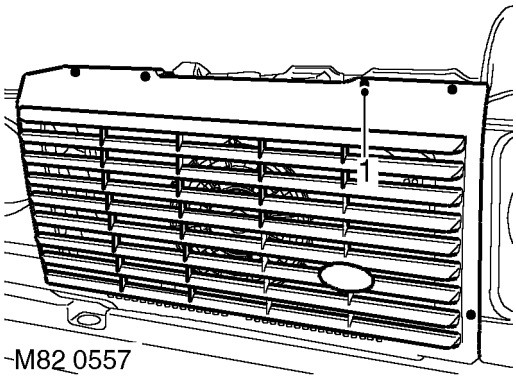

1. Remove 6 screws and remove radiator grille.

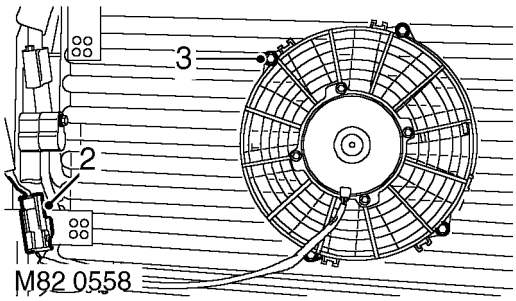

2. Disconnect fan multiplug and release multiplug holder from retaining clip.
3. With assistance remove 4 nuts and bolts securing motor to condenser.
4. Remove motor.

Refit

5. Position motor to condenser and with assistance tighten nuts and bolts to ***8 Nm (6 lbf.ft)*** .
6. Connect motor multiplug.
7. Position radiator grille and secure with screws.

RECEIVER DRIER

Service repair no - 82.17.03

Remove

1. Recover refrigerant from A/C system. ***See Adjustment.***

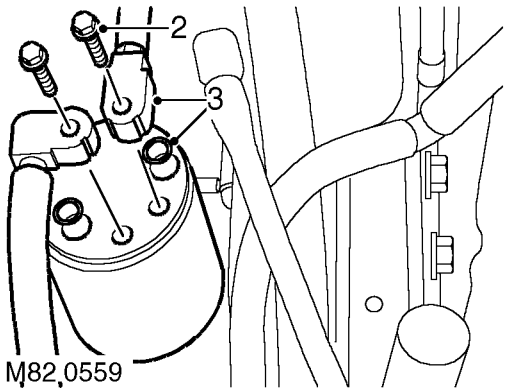

2. Remove 2 bolts securing pipe unions to receiver drier.
3. Release pipes and discard 'O' rings.

CAUTION: Immediately cap all air conditioning pipes to prevent ingress of dirt and moisture into the system.

4. Remove 2 bolts securing receiver drier mounting bracket to chassis.

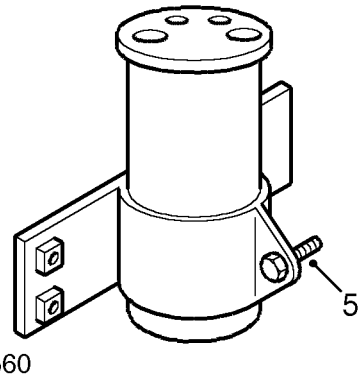

5. Remove receiver drier, slacken clamp bolt and remove bracket.

Refit

6. Position bracket to receiver drier and tighten clamp bolt.
7. Position receiver to chassis and tighten bolts.
8. Remove plugs from A/C pipes.
9. Lubricate new 'O' rings with refrigerent oil.
10. Fit 'O'rings, position pipes and tighten bolts to ***8 Nm (6 lbf.ft)*** .
11. Recharge A/C system. ***See Adjustment.***

RELAY - TEMPERATURE CONTROL - FROM 02MY

Service repair no - 82.20.40

Remove

1. Remove front speaker from drivers side. ***See ELECTRICAL, Repair.***

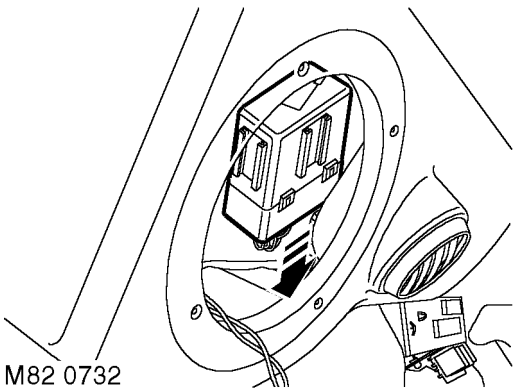

2. Release relay from support bracket.
3. Disconnect multiplug and remove relay.

Refit

4. Connect multiplug to relay and fit relay to bracket.
5. Fit front speaker. ***See ELECTRICAL, Repair.***

EVAPORATOR

Service repair no - 82.25.20

Remove

1. Remove battery cover.
2. Recover refrigerant from A/C system. ***See Adjustment.***

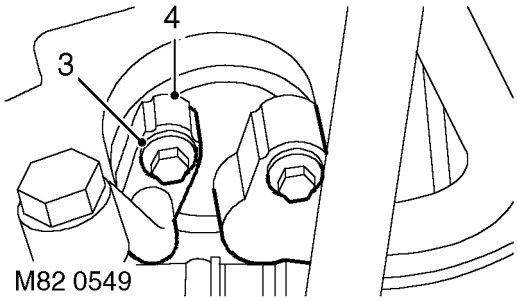

M82 0549

3. Remove 2 bolts securing A/C pipes to evaporator.
4. Release pipes and discard 'O' rings.

CAUTION: Immediately cap all air conditioning pipes to prevent ingress of dirt and moisture into the system.

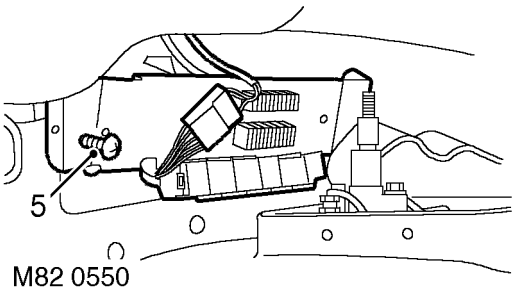

M82 0550

5. Remove 2 screws and release fuse/relay bracket from body and collect 2 spacers.

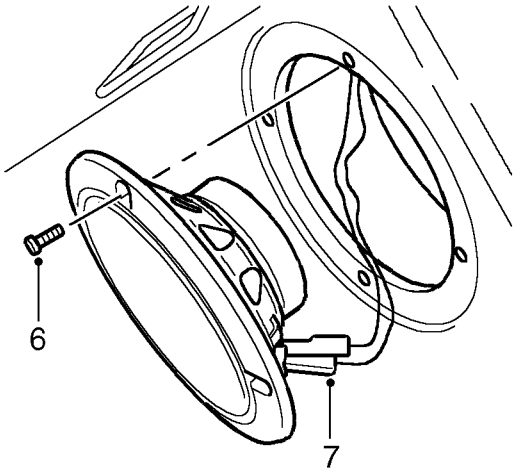

M82 0551

6. Remove 8 screws securing speakers to A/C duct.
7. Disconnect speaker Lucars and remove speakers.

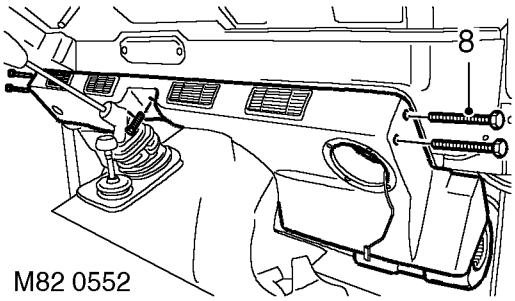

M82 0552

8. Remove 4 screws and bolt securing A/C duct to fascia panel.

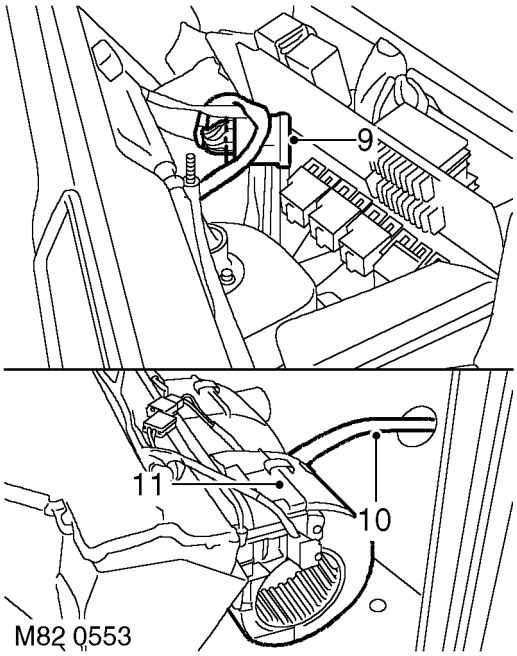

9. Disconnect multiplug from auxiliary relay bracket.
10. Release drain pipe from evaporator.
11. Release evaporator from bulkhead grommet.
12. With assistance remove A/C duct assembly from vehicle.

NOTE: Do not carry out further dismantling if component is removed for access only.

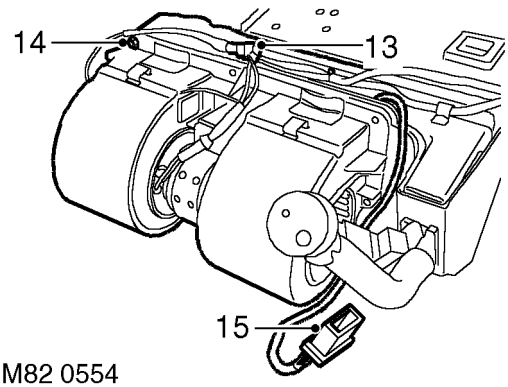

13. Disconnect blower motor multiplugs.
14. Remove 5 screws and remove blower unit from A/C duct.
15. Disconnect multiplug from trinary switch.

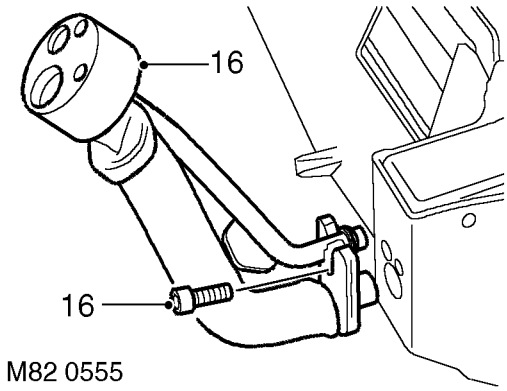

16. Remove Allen screw, remove pipe assembly from evaporator and discard 'O' rings.

CAUTION: Immediately cap all air conditioning pipes to prevent ingress of dirt and moisture into the system.

17. Remove 7 screws and remove evaporator cover from A/C duct.
18. Release temperature sensor and remove evaporator.

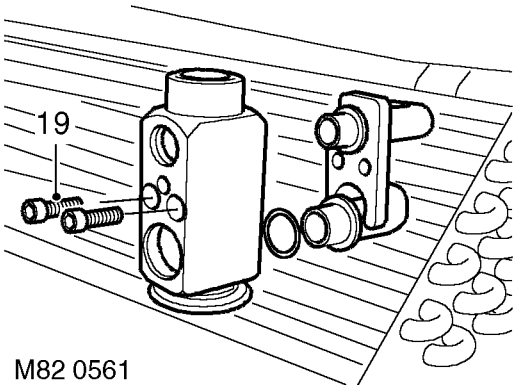

19. Remove 2 Allen screws, remove TXV from evaporator and discard 'O' rings.

Refit

20. Clean TXV and mating face.
21. Lubricate new ’O’rings with refrigerant oil and fit ’O’ rings to pipes.
22. Position TXV and tighten Allen screws.
23. Position evaporator and fit sensor.
24. Position cover and tighten screws.
25. Clean pipes and mating faces.
26. Lubricate and fit new ’O’ rings, position pipes and tighten Allen screw.
27. Connect trinary switch multiplug.
28. Position blower unit,tighten screws and connect multiplugs.
29. With assistance position A/C duct assembly to vehicle.
30. Connect drain pipe to evaporator.
31. Connect multiplug to relay bracket.
32. Align A/C duct to fascia, tighten securing bolt and screws.
33. Position speakers and connect Lucars.
34. Position relay bracket and tighten bolts.
35. Clean pipes and mating face.
36. Lubricate and fit new ’O’rings to evaporator pipes.
37. Position pipes and tighten bolts to ***6 Nm (4 lbf.ft).***
38. Renew receiver drier. ***See this Section.***
39. Recharge A/C system. ***See Adjustment.***

84 - WIPERS AND WASHERS

CONTENTS

Page

DESCRIPTION AND OPERATION

WINDSCREEN WIPERS - FROM 02MY 2
REAR WIPER - FROM 02MY 4

REPAIR

PUMP - WINDSCREEN WASHER 1
JET - REAR SCREEN WASHER 1
ARM - WIPER - FROM 02MY 2
WIPER MOTOR AND DRIVE RACK - FROM 02MY 3
WHEELBOX/DRIVE PIVOT - FROM 02MY 4
RELAY - WIPER DELAY - FROM 02MY 5
MOTOR - WIPER - TAIL DOOR - FROM 02MY 6
RELAY - TAIL DOOR WIPER - FROM 02MY 7

This page is intentionally left blank

WINDSCREEN WIPERS - FROM 02MY

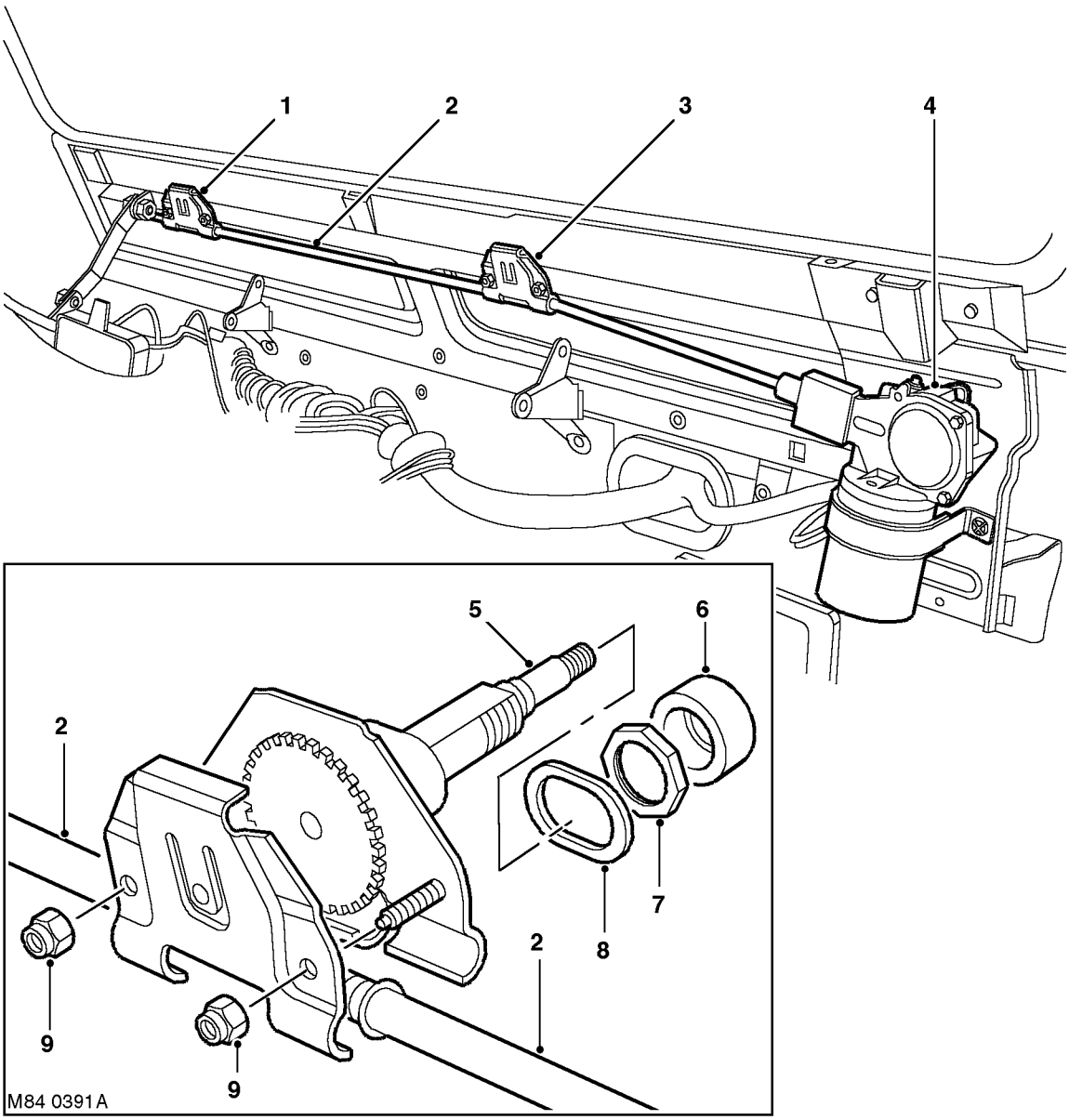

1. LH wheelbox
2. Cable
3. RH wheelbox
4. Wiper motor
5. Spindle with DIN taper arm attachment
6. Spacer
7. Locknut
8. Seal
9. Locknuts

Although windscreen wiper functionality remains the same, the mechanical architecture has undergone significant changes. The body structure has undergone some minor changes to house the revised wiper linkage.

A modified wiper motor is introduced which is balanced to reduce operation noise. The brush plate is fitted with capacitors to reduce radio interference and a thermal cut-out is introduced to prevent motor burnout. The motor also contains a new park switch which also reduces operation noise. A common motor is now used on both LHD and RHD variants.

The motor is repositioned on the bulkhead which allows a straighter drive cable run. The straighter run reduces load on the cable allowing a stiffer cable to be used. The stiffer cable and the incorporation of a reduced friction material reduces torsion wind-up of the cable and results in smoother wiper operation and a reduction of blade over travel.

New, larger wheel boxes are fitted in an inverted position from the previous installation. The bulkhead mounting holes are larger with flats for positive location of the wheel box spindle. The wheel boxes now feature a 40 tooth gear ratio in lieu of a 32 tooth gear. This reduces backlash and load and further reduces blade over travel. The wheel box casings are secured with locknuts.

The wheel box spindles now have a splined DIN taper fitting for the new wiper arms which are secured on the spindle with an M8 nut. The taper improves arm retention.

A new grease is introduced which improves wiper operation at very low temperatures.

REAR WIPER - FROM 02MY

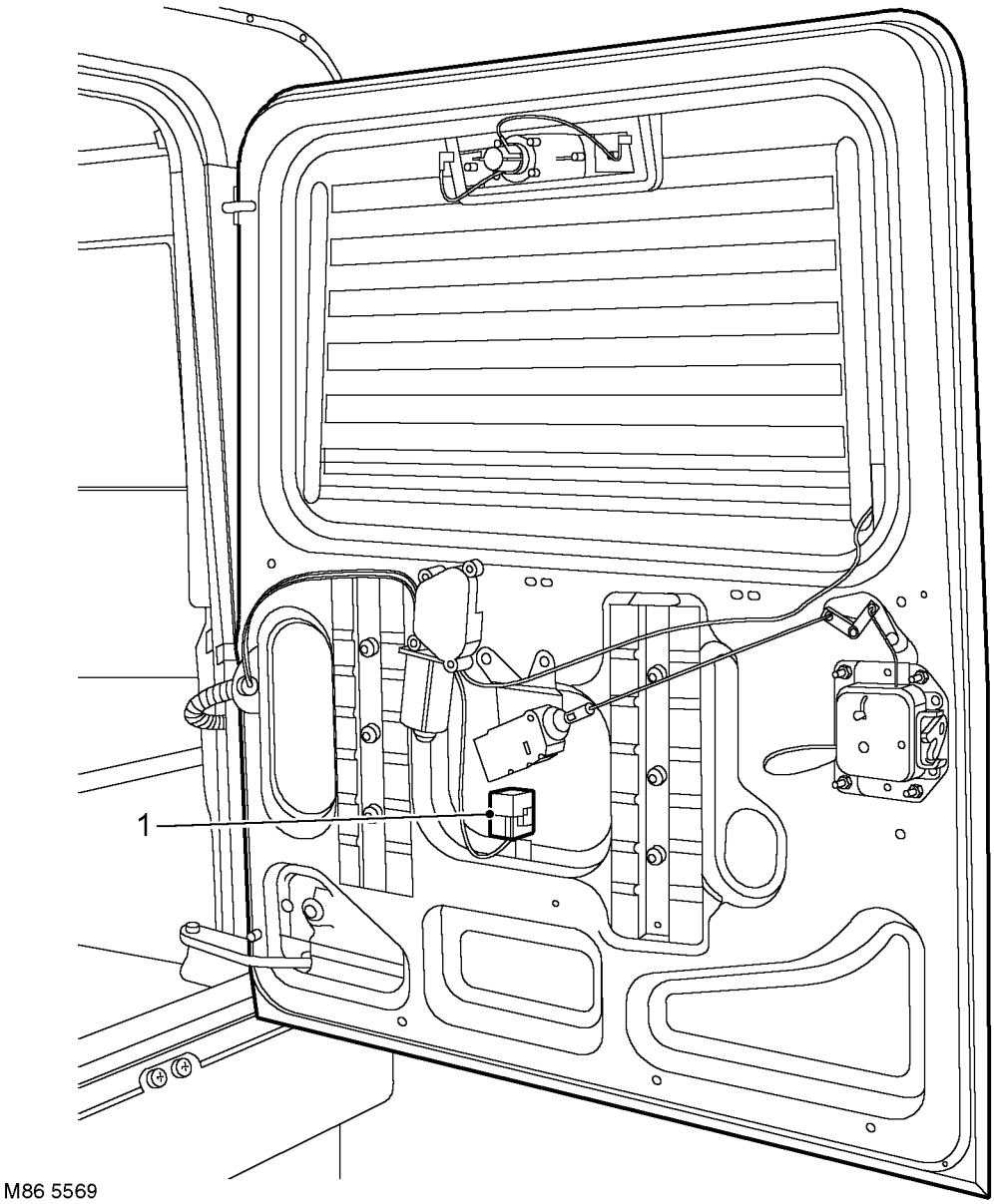

1. Rear wiper relay

The rear wiper system is unchanged except for the addition of a wiper motor relay into the electrical circuit.

The new rear wiper relay is located in the tail door, below the wiper motor. The relay coil is energised by a feed supplied from the rear wiper switch. When the relay contacts close, a feed is supplied via the ignition switch (position II) and a fuse in the passenger compartment fuse box, through the relay contacts to the wiper motor.

PUMP - WINDSCREEN WASHER

Service repair no - 84.10.21

Remove

1. Remove headlamp. ***See ELECTRICAL, Repair.***
2. Position drain tin to collect any fluid spillage.

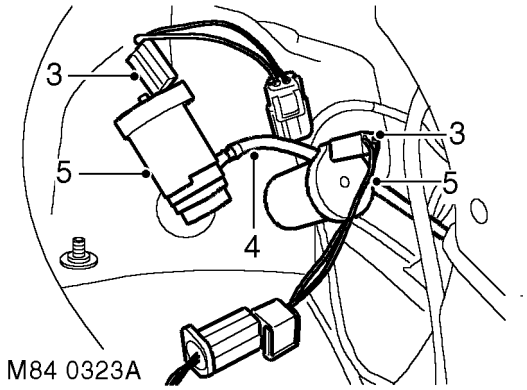

3. Disconnect multiplug from washer pump.
4. Disconnect hose from washer pump.
5. Release washer pump from reservoir and discard sealing washer.

Refit

6. Fit new sealing washer and secure pump to reservoir.
7. Connect hose and multiplug to washer pump.
8. Fit headlamp. ***See ELECTRICAL, Repair.***
9. Fill reservoir with screen cleaning fluid.

JET - REAR SCREEN WASHER

Service repair no - 84.30.09

Remove

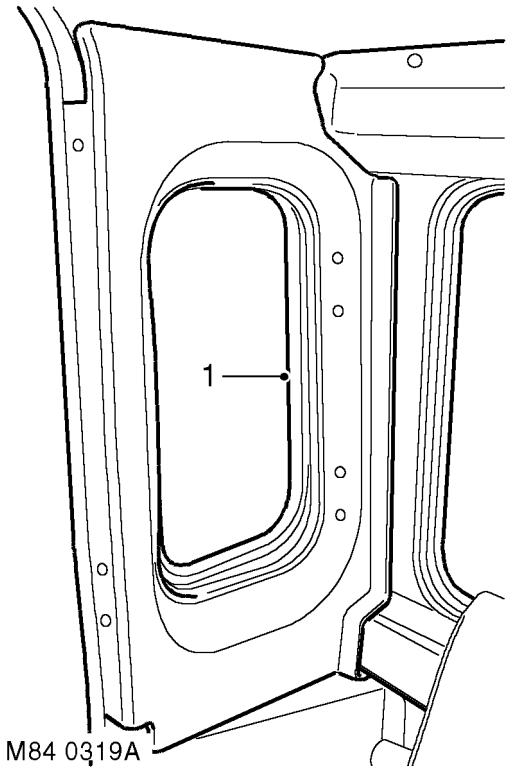

1. Release and remove both rear side window finishers.

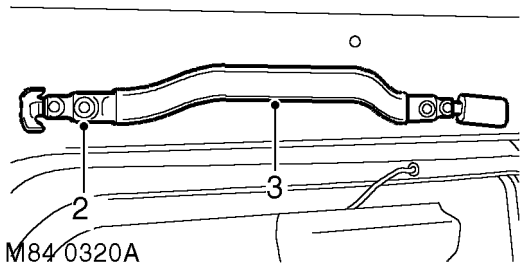

2. Remove 8 screws securing both rear grab handles.
3. Remove both rear grab handles.

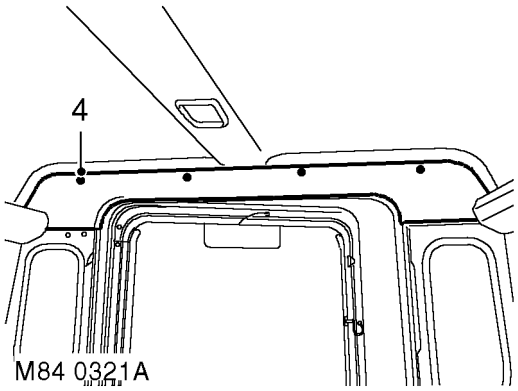

4. Remove 4 trim studs securing upper rear finisher to body.
5. Release and remove upper rear finisher.
6. Position drain tin to collect any fluid spillage.

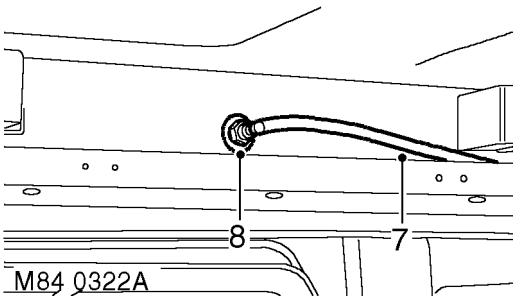

7. Disconnect washer tube from jet.
8. Remove nut securing washer jet to body.
9. Remove washer jet.

Refit

10. Fit washer jet to body and secure with nut.
11. Connect washer tube to jet.
12. Remove drain tin.
13. Fit upper rear finisher and secure with trim studs.
14. Fit both rear grab handles and secure with screws.
15. Fit both rear side window finishers.

ARM - WIPER - FROM 02MY

Service repair no - 84.15.02

Remove

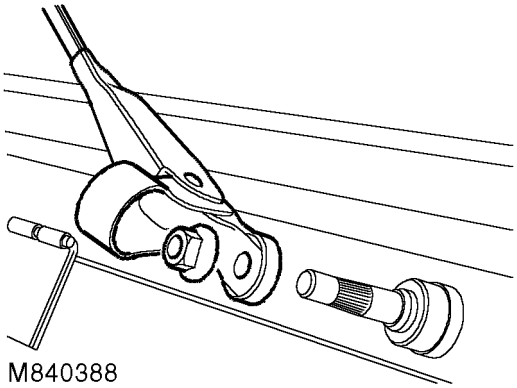

1. Raise nut cover on wiper arm and remove nut.
2. Remove wiper arm from spindle.

NOTE: Do not carry out further dismantling if component is removed for access only.

3. Remove wiper blade.

Refit

4. Fit wiper blade.
5. Fit wiper arm to spindle and align blade to windscreen.
6. Tighten nut securing wiper arm to ***17 Nm (13 lbf.ft),*** and fit cover.

WIPER MOTOR AND DRIVE RACK - FROM 02MY

Service repair no - 84.15.09

Remove

1. Disconnect battery negative lead. ***See ELECTRICAL, Repair.***
2. Remove wiper arms. ***See this Section.***
3. Remove fascia console. ***See CHASSIS AND BODY, Repair.***

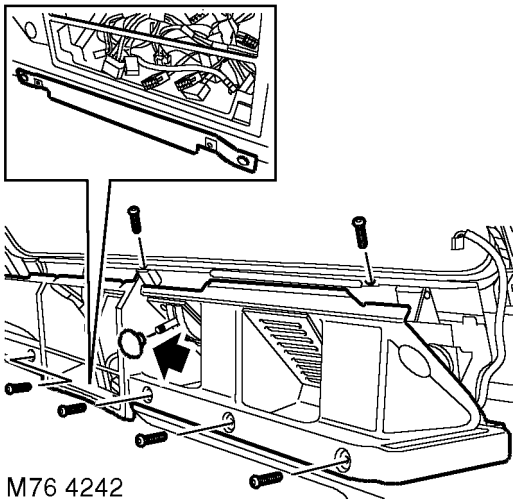
M76 4242

4. Remove air vent control knobs.
5. Remove 6 screws, remove fascia closing panel and collect nut plate.

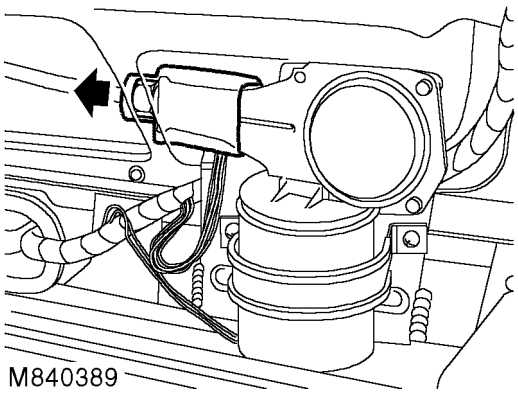
M840389

6. Move cover aside and loosen wiper motor drive tube nut.

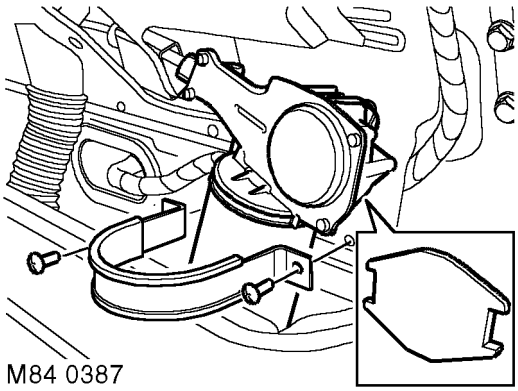
M84 0387

7. Remove 2 screws securing wiper motor, remove retaining strap and mounting pad.

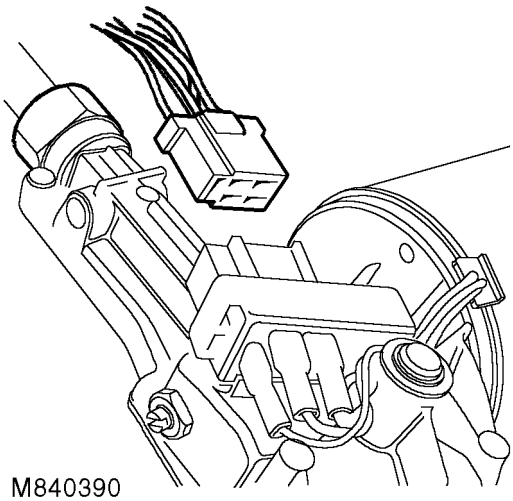
M840390

8. Disconnect multiplug from wiper motor.
9. Remove tube nut and remove wiper motor with rack.

Refit

10. Lubricate wiper motor drive rack with grease.
11. Feed wiper motor rack into tube, connect multiplug and fit but do not tighten tube nut.
12. Fit mounting pad and retaining strap, align wiper motor and tighten screws.
13. Tighten wiper motor tube nut to ***8 Nm (6 lbf.ft)*** and reposition nut cover.
14. Fit fascia closing panel.

15. Fit nut plate and fit screws to secure nut plate and closing panel.
16. Fit knobs to air vent control levers.
17. Fit fascia console. ***See CHASSIS AND BODY, Repair.***
18. Fit wiper arms. ***See this Section.***
19. Connect battery negative lead. ***See ELECTRICAL, Repair.***

WHEELBOX/DRIVE PIVOT - FROM 02MY

Service repair no - 84.15.25

Remove

1. Disconnect battery negative lead. ***See ELECTRICAL, Repair.***
2. Remove steering column nacelle. ***See STEERING, Repair.***
3. Remove wiper motor and drive rack. ***See this Section.***

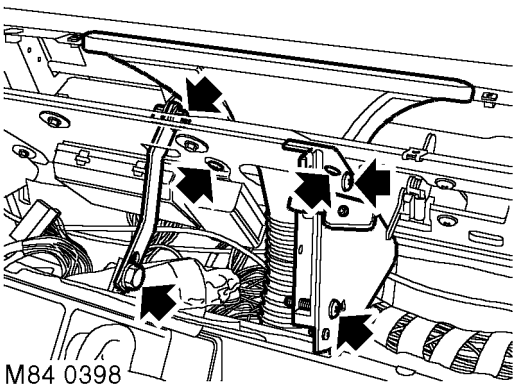

M84 0398

4. Remove 2 screws and move heater fan switch aside.
5. Remove 2 screws securing drivers side demister duct.
6. Disconnect demister tube and remove duct.
7. Remove bolt and nut and bolt securing steering column support bracket and remove bracket.

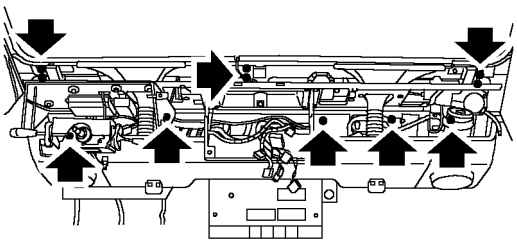

M84 0399

8. Remove 11 screws securing fascia support rail.

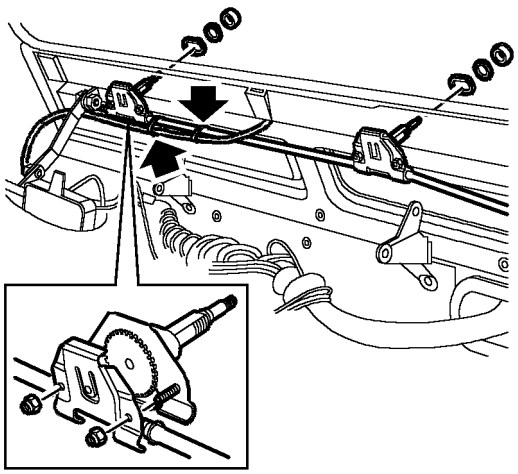
M84 0400

9. Remove cable ties securing washer tube to windscreen wiper rack tube.
10. Loosen fully 4 nuts securing backplates to wheel boxes and remove windscreen wiper rack tubes.
11. Remove seals from wheel box spindles.
12. Remove 2 nuts securing wheel boxes and remove sealing washers.
13. Carefully pull fascia support rail from bulkhead sufficiently to remove wheel boxes.

Refit

14. Loosen fully but do not remove nuts securing wheel box back plates.
15. Grease wheel boxes.
16. Fit wheel boxes, fit sealing washers and tighten nuts to ***5 Nm (3.7 lbf.ft).***
17. Fit spindle seals.
18. Fit wiper rack tubes and tighten wheel box back plate nuts sufficiently to hold tubes. Tighten wheel box back plate nuts to ***6 Nm (4 lbf.ft)*** after fitting windscreen wiper motor.
19. Align washer tube to rack tube and secure with cable ties.
20. Align fascia support rail and secure with screws.
21. Fit steering column support bracket and tighten bolt and nut and bolt to ***45 Nm (33 lbf.ft).***
22. Fit demister duct to tube, align relay bracket and secure duct with screws.
23. Position heater fan switch and secure with screws.
24. Fit wiper motor and drive rack. ***See this Section.***
25. Fit steering column nacelle. ***See STEERING, Repair.***
26. Connect battery negative lead. ***See ELECTRICAL, Repair.***

RELAY - WIPER DELAY - FROM 02MY

Service repair no - 84.15.37

Remove

1. Disconnect battery negative lead. ***See ELECTRICAL, Repair.***

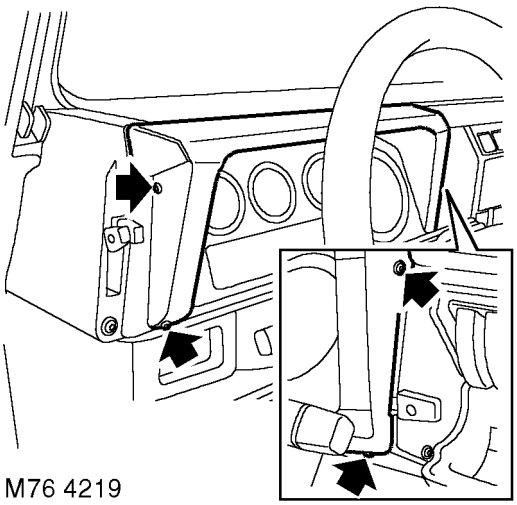
M76 4219

2. Remove 4 screws securing instrument pack and release pack from fascia.

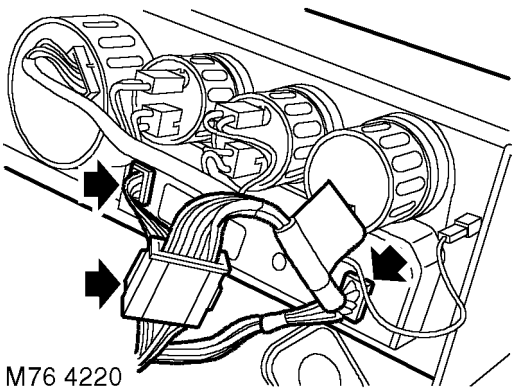
M76 4220

3. Disconnect 2 multiplugs from warning lamp panel.
4. Disconnect instrument pack multiplug from main harness.
5. Remove instrument pack.

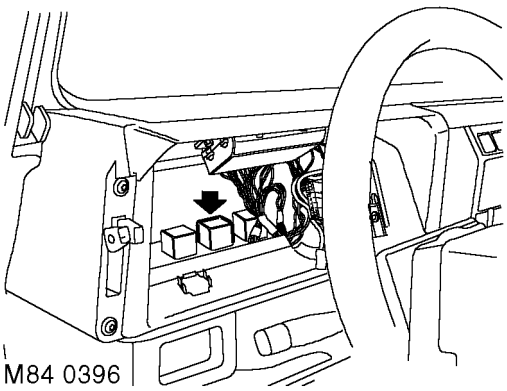

6. Identify and remove relay.

Refit

7. Fit relay.
8. Position instrument pack and connect multiplugs.
9. Fit instrument pack to fascia and secure with screws.
10. Connect battery negative lead. ***See ELECTRICAL, Repair.***

MOTOR - WIPER - TAIL DOOR - FROM 02MY

Service repair no - 84.35.12

Remove

1. Remove spare wheel from tail door.

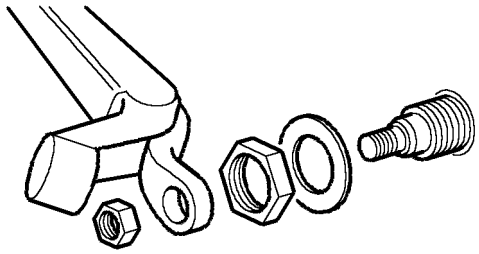

2. Raise nut cover, remove nut and release wiper arm.
3. Remove nut and collect washer securing wiper motor to tail door.
4. Open tail door.
5. Remove tail door trim casing. ***See CHASSIS AND BODY, Repair.***

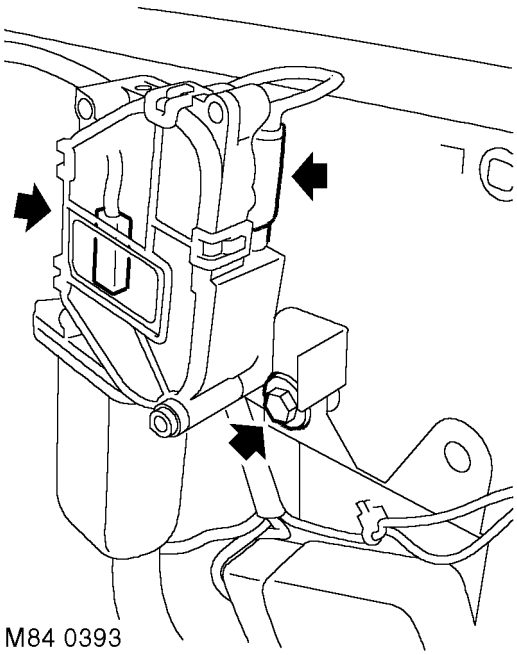

6. Remove bolt securing door locking solenoid to tail door.
7. Pivot both assemblies and withdraw wiper motor from tail door.
8. Disconnect multiplugs from wiper motor.
9. Remove wiper motor assembly.

NOTE: Do not carry out further dismantling if component is removed for access only.

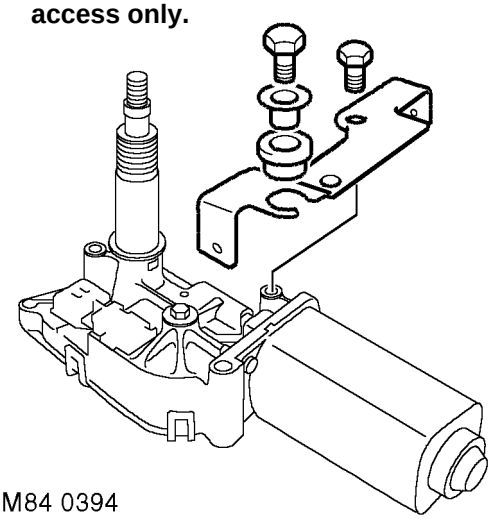

10. Remove 2 bolts securing wiper motor to mounting bracket, remove bracket.

Refit

11. Fit mounting bracket to motor and tighten bolts to ***10 Nm (7 lbf.ft).***
12. Fit motor spindle to rear door, connect multiplugs and push motor fully home. Align motor mounting bracket with solenoid mounting bracket, fit bolt and tighten to ***10 Nm (7 lbf.ft).***
13. Fit rear door trim casing. ***See CHASSIS AND BODY, Repair.***
14. Fit washer and nut to rear wiper assembly, tighten nut to ***3 Nm (2.2 lbf.ft).***
15. Fit wiper arm to spindle, align blade to glass and tighten nut to ***17 Nm (13 lbf.ft).***
16. Close nut cover.
17. Fit spare wheel and tighten nuts to ***45 Nm (33 lbf.ft).***

RELAY - TAIL DOOR WIPER - FROM 02MY

Service repair no - 84.35.38

Remove

1. Remove tail door trim casing. ***See CHASSIS AND BODY, Repair.***

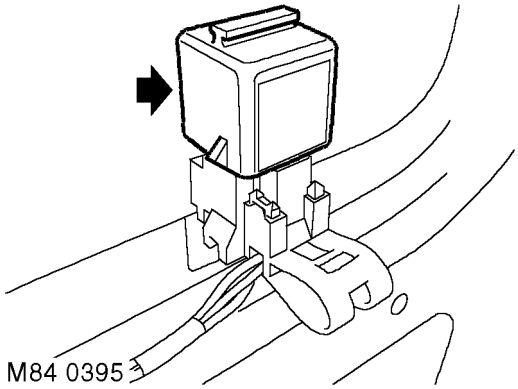

2. Remove rear wiper motor relay.

Refit

3. Fit relay.
4. Fit tail door trim casing. ***See CHASSIS AND BODY, Repair.***

86 - ELECTRICAL

CONTENTS

Page

DESCRIPTION AND OPERATION

SECURITY AND CENTRAL DOOR LOCKING 1
SECURITY AND CENTRAL DOOR LOCKING 2
ANTI-THEFT ALARM - FROM 02MY 3
IMMOBILISATION SYSTEM - FROM 02MY 12
CENTRAL DOOR LOCKING (CDL) - FROM 02MY 15
ANTI-THEFT ALARM SYSTEM SELF TEST 17
FASCIA CONSOLE 18
HEATED FRONT SCREEN - FROM 02MY 20
HEATED FRONT SEATS - FROM 02MY 22
ELECTRIC FRONT WINDOWS - FROM 02MY 24
PASSENGER COMPARTMENT FUSE BOX 26
UNDER SEAT FUSE BOX 27

ADJUSTMENT

HEADLAMPS - ALIGN BEAM 1
SOLENOID/MOTOR - FRONT DOOR - ADJUST 1

REPAIR

BELT - AUXILLARY DRIVE 1
HARNESS - INJECTORS 1
STARTER MOTOR 2
CENTRE HIGH MOUNTED STOP LIGHT (CHMSL) - UP TO 02MY 2
ALTERNATOR 3
HORN - LH 4
HEADLAMP 5
LAMP - TAIL 6
RADIO 6
SPEAKER - FRONT 7
SWITCH - TRANSMISSION BRAKE 7
LAMP - FRONT FLASHER 8
BATTERY - DISCONNECT - FROM 02MY 8
MOTOR & REGULATOR - FRONT DOOR - FROM 02MY 9
SWITCH - FASCIA - FROM 02MY 10
HARNESS - FRONT DOOR - FROM 02MY 10
SOLENOID/MOTOR - TAIL DOOR - FROM 02MY 11
SOLENOID/MOTOR - FRONT DOOR - FROM 02MY 12
SOLENOID/MOTOR - REAR DOOR - FROM 02MY 13
HARNESS - REAR DOOR - FROM 02MY 14
REVERSE AND FOG GUARD LAMP - BULB 15

CONTENTS

Page

LAMP ASSEMBLY - CENTRE HIGH MOUNTED STOP LIGHT (CHMSL) - FROM 02MY 16
FLASHER UNIT - HAZARD WARNING - FROM 02MY 16
RELAY - HEATED FRONT SCREEN - FROM 02MY 17
RELAY - REAR FOG GUARD - FROM 02MY 18
RELAY - STARTER - FROM 02MY 19
SWITCH - HEADLAMP LEVELLING - FROM 02MY 19
CIGAR LIGHTER - FRONT - FROM 02MY 20

SECURITY AND CENTRAL DOOR LOCKING SYSTEM - FROM 02MY

The following description details the functionality and operation of the 10AS Security and Central Door Locking (CDL) System fitted to 2002MY Defender. The system contains some new features and also retains some features from previous Defender models. The alarm system and CDL system are controlled by the 10AS anti-theft alarm ECU.

New door lock barrels are introduced and use the same key as the ignition switch barrel, thereby eliminating the requirement for a separate key for the doors.

NOTE: Some markets will only have some of the features described and some will have no security or central door locking functions.

The security system comprises the following components:

- 10AS anti-theft alarm ECU
- Remote handset transmitters
- Transponder coil
- Volumetric sensor
- CDL actuators
- Bonnet switch
- Driver’s door key barrel switch
- Door switches
- Bonnet switch
- Battery Backed-Up Sounder (BBUS) or alarm sounder
- Security LED
- Engine immobilised warning lamp
- Direction indicators

SECURITY AND CENTRAL DOOR LOCKING SYSTEM COMPONENTS - FROM 02MY

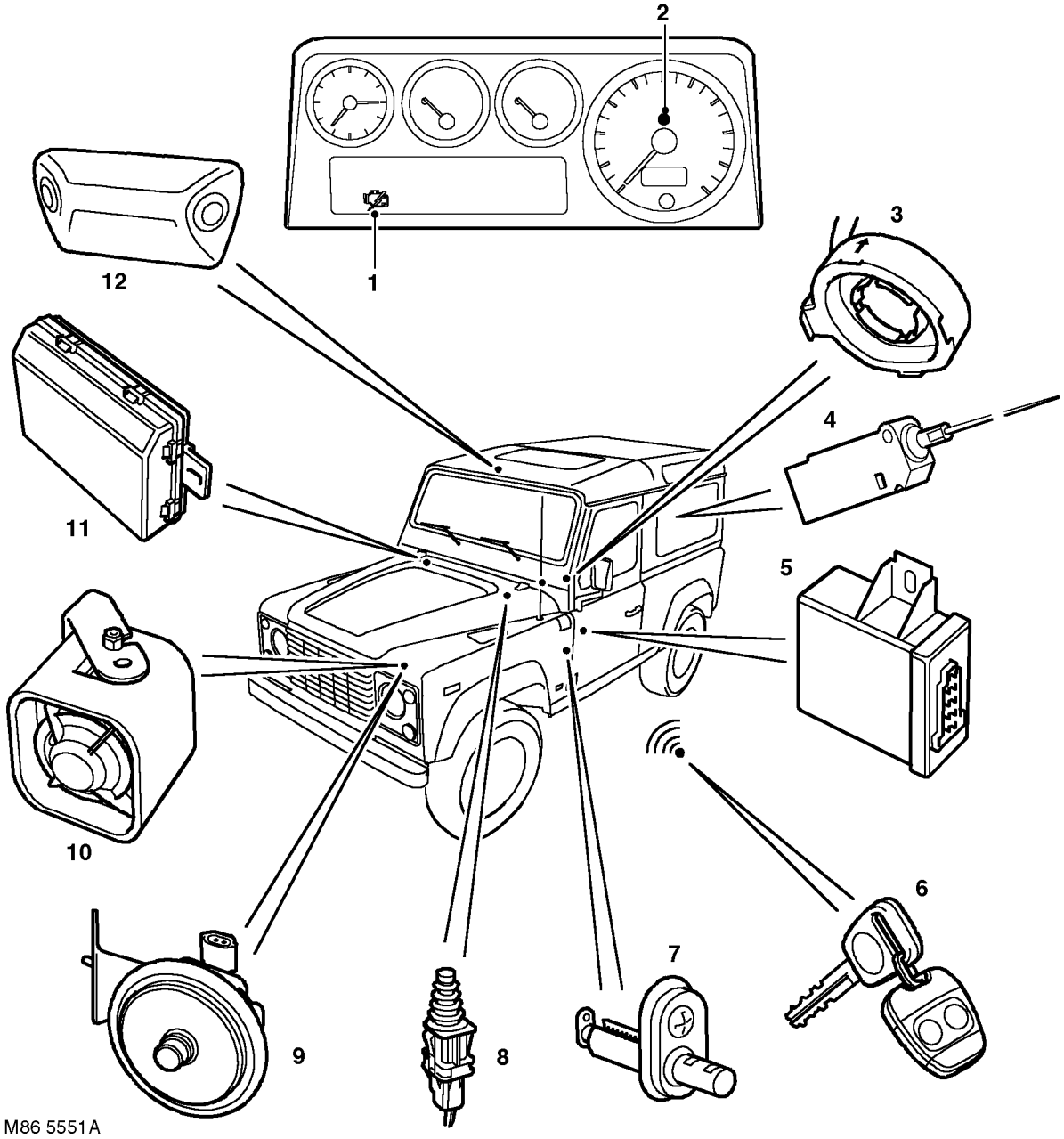

1. Engine immobilisation warning lamp
2. Security LED
3. Transponder coil
4. CDL actuators (tail door shown)
5. Immobilisation ECU (300Tdi models only)
6. Remote handset and key
7. Door switches
8. Bonnet switch
9. Alarm sounder
10. Battery Backed Up Sounder (BBUS)
11. Anti-theft alarm ECU
12. Volumetric sensor

ANTI-THEFT ALARM - FROM 02MY

The alarm and immobilisation system on 2002MY Defender is similar to that used on Discovery Series I (LJ) models from 1996MY. The alarm system comprises the anti-theft alarm ECU, bonnet and door switches and a volumetric sensor.

Anti-Theft Alarm ECU

The anti-theft alarm ECU is located behind the instrument pack and receives a permanent battery supply via fuses 6 and 7 in the under seat fuse box. The ECU also receives a battery supply via the ignition switch position II and fuse 1 in the passenger compartment fuse box. The ECU is connected to the various supporting components by two harness connectors.

The ECU controls the alarm system (perimetric and volumetric security), CDL system, engine immobilisation system (Td5 only) and various other vehicle functions including direction indicators and interior lamps.

The anti-theft alarm ECU incorporates an RF receiver and antenna for reception of RF signals from the remote handset for locking and alarm arming. The antenna is unterminated at one end, and for optimum performance the antenna must not be wound around adjoining harnesses.

The anti-theft alarm ECU operates at one of two frequencies which are identified by a label on the unit. The frequencies are:

- 433 MHz - Europe, Gulf States, South Africa
- 315 MHz - North America, South East Asia, Japan, Australia.

The anti-theft alarm ECU also incorporates an integral inertia switch. In the event of an impact of sufficient severity to trigger the inertia switch when the ignition is on, the ECU will unlock all doors and operate the hazard warning lamps. The ECU will remain in this condition for a pre-programmed period of 2 minutes. To reinstate CDL functionality and to deactivate the hazard warning lamps, the ignition should be turned off and then on after the 2 minute timer has expired.

NOTE: There is a separate inertia switch for fuel cut off.

Door and Bonnet Switches

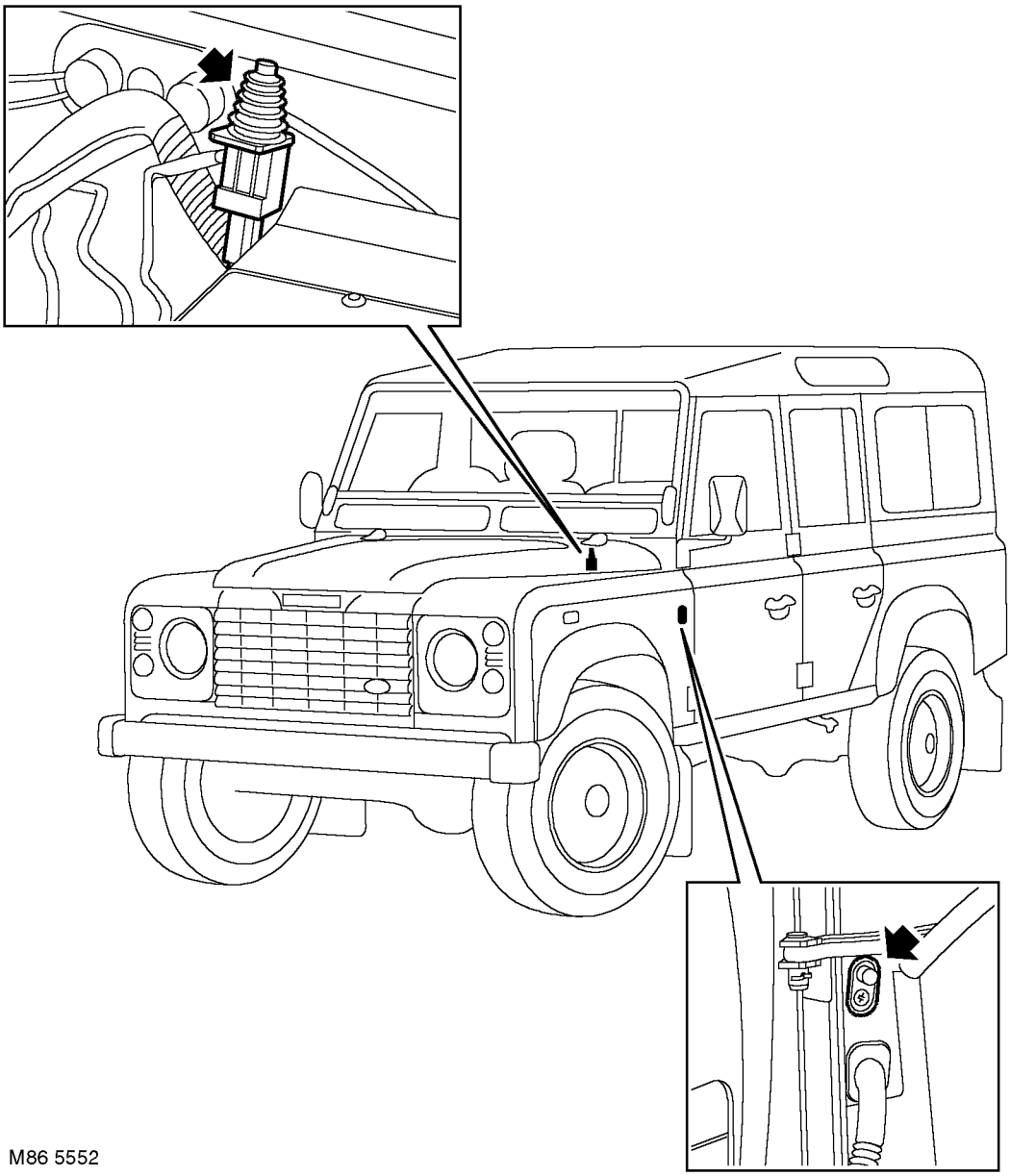

M86 5552

The bonnet switch is located at the rear of the bonnet aperture on the bulkhead. The door switches are located on the 'A' posts for the front doors, the 'B' posts for the rear doors and on the inside face of the tail door aperture.

The drivers door switch and the bonnet switch are connected to the anti-theft alarm ECU on individual single wires. The remaining passenger doors and, if applicable, the tail door are jointly connected on a single wire to the ECU. If a fault occurs which involves incorrect mislock signals, alarm triggers and interior lamp operation, the door switch earth may be the cause of incorrect operation.

If any door or the bonnet is opened, the switch closes and completes an earth path to the anti-theft alarm ECU. This completed earth path input is sensed by the ECU, which, if armed, will sound the BBUS or alarm sounder. The ECU also controls, via the door switches and ignition on/off signals, the operation of the interior lamps.

Perimetric Protection

Perimetric protection is the monitoring of each opening door or bonnet to unauthorised intrusion. The anti-theft alarm ECU uses the door and bonnet switches described previously to determine when illegal intrusion has occurred.

If a door/bonnet is left open when the alarm system is armed, the ECU will determine a mislock situation which is indicated by non operation of the hazard warning lamps. If the drivers door is left open, the security LED in the instrument pack will be illuminated for the 10 second confirmation period. If any other door or the bonnet is left open the security LED will remain off for the 10 second confirmation period. After the confirmation period, the LED will revert to the 1Hz deterrent flash.

If the door/bonnetis subsequently closed, the hazard warning lamps will flash to show that full perimetric protection is now invoked. The security LED will also resume the 10 second confirmation flash.

If only the bonnet is left open, all doors will have perimetric protection and volumetric protection will also be set. If a door is left open, the volumetric protection is suspended until that door is subsequently closed.

Volumetric Protection

The vehicle alarm system can be armed with or without volumetric protection activated. If volumetric protection is required, the vehicle must be locked using the lock button on the remote handset. If volumetric protection is not required, because a pet is to be left in the vehicle for instance, the vehicle must be locked using the vehicle key in the drivers door lock.

When the vehicle is locked using the remote handset, the volumetric sensor will wait for a period of 15 seconds before arming. This allows time for the air in the vehicle to settle and prevent incorrect activation of the alarm.

If volumetric protection is set and there is a disturbance in the vehicle, i.e., a window left open or a moving object in the vehicle, within the 15 second period, the volumetric sensor will not activate. The sensor must detect no disturbance for the full 15 second period before arming.

Volumetric Sensor

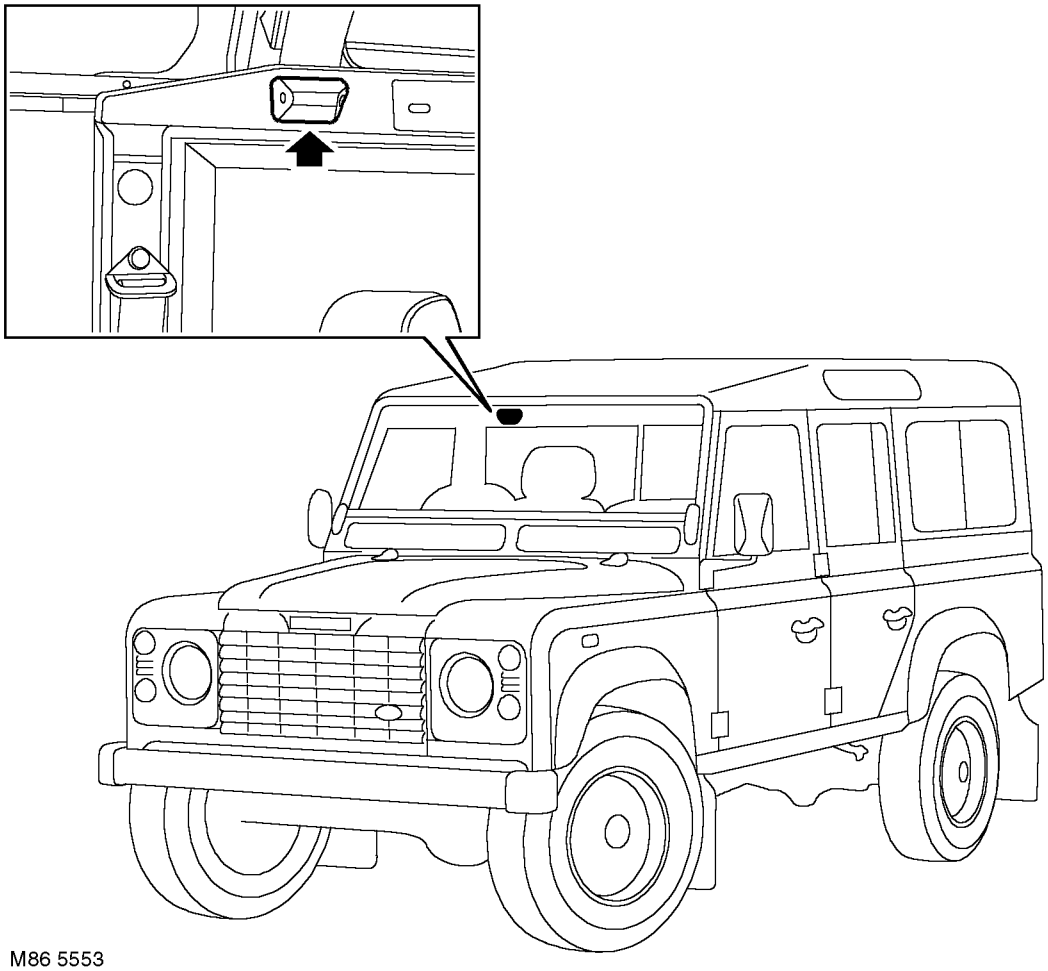

M86 5553

The volumetric sensor is located behind the RH 'B' post on 90/110 station wagon models, on the headlining between the interior lamp and rear view mirror on 90/110 pick-up models and on the headlining above the RH door on 130 crewcab models.

The volumetric sensor operates by emitting a signal, which is received back to the sensor as it bounces back from objects inside the vehicle. Once armed, the sensor will detect a disturbance to the returned waves. This is sensed by the anti-theft alarm ECU which activates the alarm sounder or BBUS.

Alarm Sounders

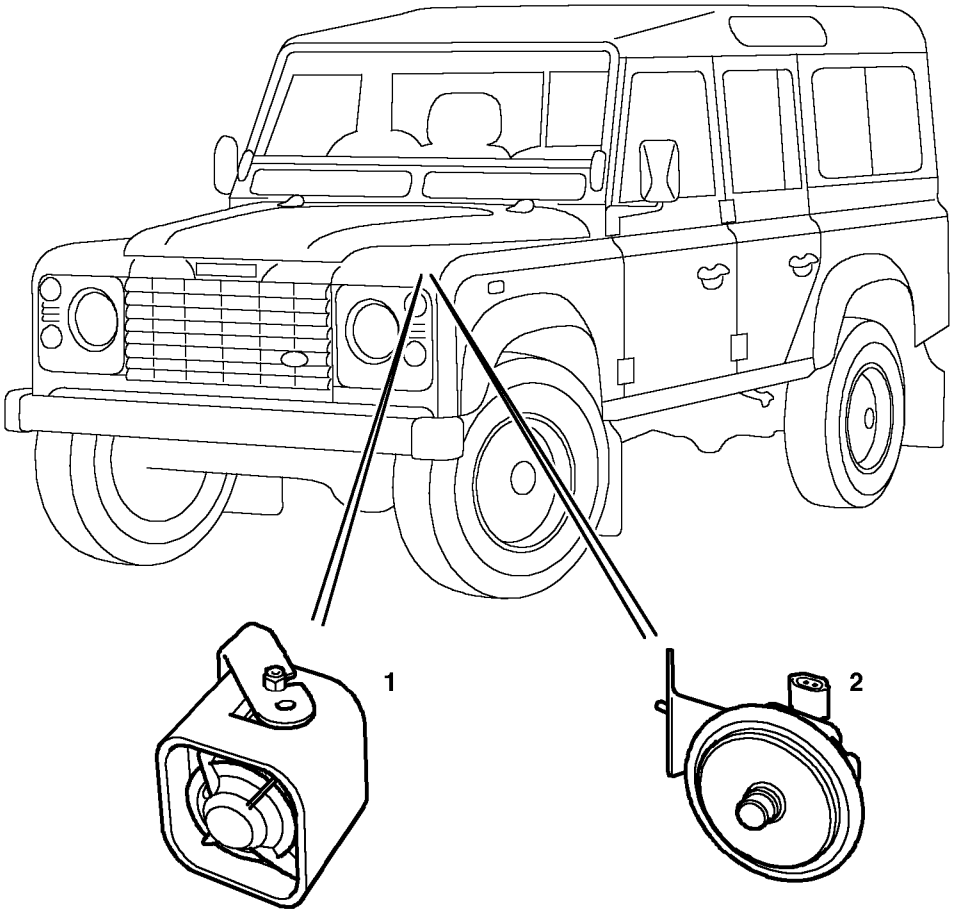

M86 5554

1. Battery Backed Up Sounder (BBUS)
2. Alarm sounder

Two types of alarm sounder are available, dependant on the vehicle market configuration.

A Battery Backed-Up Sounder (BBUS) is used in some markets and located in the LH front wing, behind the headlamp. This is a tamper proof sounder with its own power supply which allows it to continue operating even if disconnected from the vehicle power supply. The BBUS is connected to a permanent battery supply via fuse 7 in the under seat fuse box. Two further connections are made to the anti-theft alarm ECU and a fourth connection is to an earth header. If the BBUS is disconnected without first being disarmed by the anti-theft alarm ECU, it will operate for 4.5 minutes.

To disarm the BBUS, when the battery is to be disconnected for instance, the ignition must be turned on to position II and back to the off position , after which a 17 second delay is initiated to allow the battery or BBUS connector to be disconnected. If the BBUS sounds, it can be disarmed by unlocking the vehicle with the remote handset.

Where a BBUS is not specified, a standard vehicle horn is used for the alarm sounder and is located in the LH front wing, behind the headlamp. The sounder is operated by an alarm relay which is controlled by the anti-theft alarm ECU. The relay receives a permanent battery supply via fusible link 6 in the under seat fuse box. The relay coil is connected to the anti-theft alarm ECU which provides an earth for the coil when horn operation is required. This operates the relay contacts and supplies battery voltage to the sounder, causing it to operate.

Visual and Audible Warnings

Audible and visual warnings are dependant on market legislation. The hazard warning lamps are controlled by two outputs from the anti-theft alarm ECU; one for the LH lamps and one for the RH lamps. To illuminate the warning lamps the output from the ECU is at battery voltage. When the lamps are off, the output is driven to earth.

When the alarm is armed the hazard warning lamps will flash three times to indicate that the system is active. When the alarm is triggered the sounder will operate in either a pulsed or continuous tone (dependant on market legislation) and the hazard warning lamps will flash at 0.5 second on/off intervals for 30 seconds. The alarm system can be triggered for up to three times in any one alarm armed cycle. When the alarm system is disarmed confirmation will be by one single flash of the hazard warning lamps for 0.3 seconds.

If the hazard warning lamps are active when an alarm trigger is active or the alarm is armed, the visual alarm active visual warning using the hazard warning lamps will be cancelled.

In addition to the visual and audible warnings, the security LED in the instrument pack also displays alarm system status information.

Security LED

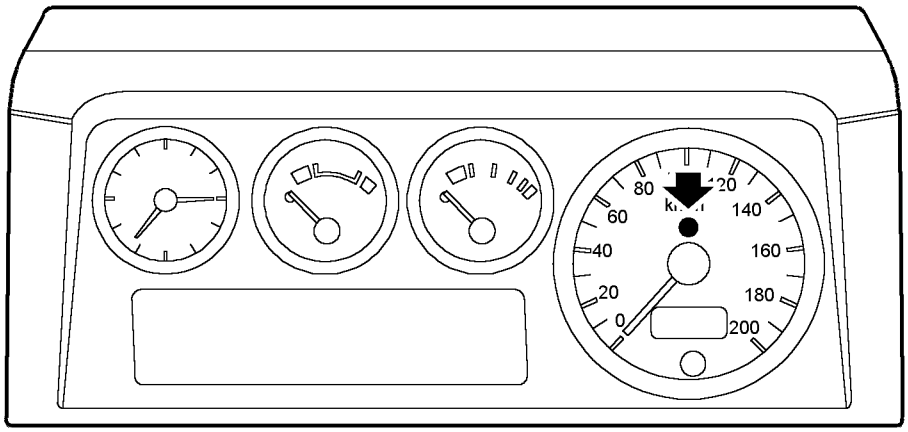

M86 5555

The security LED has a number of functions to indicate anti-theft alarm system status. The LED is located in the speedometer housing in the instrument pack. The LED receives a permanent battery supply via fusible link 6 in the under seat fuse box. The LED is connected to the anti-theft alarm ECU which earths the connection when LED operation is required. When the LED is not required to be illuminated, the anti-theft alarm ECU holds the connection at battery voltage, keeping the LED extinguished.

When the system is armed and the bonnet and all doors are closed, the LED flashes quickly for a 10 second confirmation period and confirms that perimetric and volumetric systems are armed. After the 10 second confirmation period the LED flash changes to a slow flash to confirm that the alarm and immobiliser systems are armed and to act as deterrent to thieves.

The LED also conveys CDL system information and this functionality is described in the Central Door Locking (CDL) section.

Remote Handset

The remote handset is a separate unit from the vehicle key and is used to arm and disarm the alarm system. The handset comprises two buttons; lock and unlock. The handset contains a battery (CR3032) and a printed circuit board containing the circuitry to generate the RF signals.

NOTE: In selected markets, the vehicle key, when used in the drivers door key barrel switch, will not disarm the alarm system.

The remote handset RF code consists of two parts. One part is a fixed code that is unique to the handset and the second part is a rolling code which changes in accordance with a predetermined pattern. The anti-theft alarm ECU can store the codes of up to four different remote handsets at any one time.

If the remote handset battery falls below a predetermined level, the handset will transmit an additional RF signal code to the anti-theft alarm ECU when either button is depressed. The security LED will display this as two rapid flashes every 0.5 seconds to visually display the low handset battery condition. This will continue for the 10 second confirmation period or until the ignition is switched on.

Resynchronisation of Remote Handset

If either the remote handset battery or the vehicle battery is removed or disconnected, the rolling part the handset code is lost and the handset(s) need to be resynchronised to the anti-theft alarm ECU. The resynchronisation procedure is as follows:

- Disconnect the vehicle battery.
- Wait for 30 seconds for residual current to dissipate.
- Reconnect the vehicle battery.
- Carefully prise the remote handset apart and remove the battery. Avoid unnecessary handling of the battery.
- With the battery removed, press either the lock or unlock button several times to remove residual current from the circuitry.
- Check the handset battery with a voltmeter. If the battery voltage is less than 2.7 volts, replace the battery.
- Ensure that the battery contact surfaces are clean and replace the battery in the handset clip with the + symbol uppermost. Put the two halves of the handset case back together.
- DO NOT press any buttons.
- With the handset within range of the vehicle, press the lock button four times in quick succession. The anti-theft alarm ECU will respond by locking the vehicle.
- Press the unlock button once to complete the resynchronisation procedure.

This page is intentionally left blank

IMMOBILISATION SYSTEM - FROM 02MY

Engine immobilisation is available on all 2002MY engine derivatives, although it is not available in selected markets. On Td5 models, the immobilisation system is controlled directly by the anti-theft alarm ECU. On 300Tdi models, the immobilisation system is controlled by an engine immobilisation ECU in conjunction with the anti-theft alarm ECU.

When immobilisation occurs on Td5 models, engine crank is disabled by the anti-theft alarm ECU breaking the earth path for the starter relay coil and the ECM disables the fuel pump relay and the glow plug relay.

When immobilisation occurs on 300Tdi models, engine crank is disabled by the anti-theft alarm ECU breaking the earth path for the starter relay coil and the engine immobilisation ECU disables the fuel cut-off solenoid, the starter motor solenoid and the glow plug relay.

Two types of immobilisation are available; passive and active.

Engine Immobilised Warning Lamp

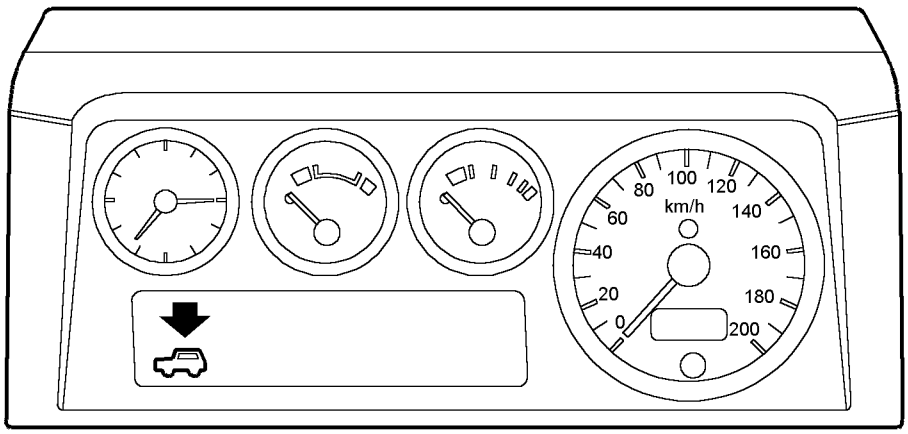

M86 5568

The engine immobilised warning lamp is located in the instrument pack. The lamp is used by the anti-theft alarm ECU to show that the engine is immobilised during an attempted engine start.

The warning lamp receives a battery supply from the ignition switch position I (aux) via the passenger compartment fusebox. The anti-theft alarm ECU controls the warning lamp. When the warning lamp is not required, the ECU supplies a battery supply to the warning lamp. When warning lamp operation is required, the ECU provides an earth for the bulb.

If the ignition switch is moved to the crank position, but operation of the starter motor is prohibited and the engine immobilised warning lamp flashes, then the anti-theft alarm ECU has not received the correct code from the remote handset and the vehicle will remain immobilised. Ensure that the remote handset is in the proximity of the transponder coil. If the remote handset is not available or inoperative, the immobilisation system can be disarmed using the EKA procedure outlined later in this section.

If the ignition switch is turned to the crank position III and the remote handset is not in the proximity of the transponder coil, engine immobilisation will remain active and the warning lamp will flash to inform the driver.

Passive Immobilisation

Passive immobilisation occurs when the key is removed from the ignition switch and the drivers door is opened, after a period of 30 seconds the engine will become immobilised. If the ignition is turned off or the key is removed from the ignition switch and drivers door is not opened, the engine will become immobilised after 5 minutes.

The passive immobilisation system operates in conjunction with the transponder coil located around the ignition switch barrel. The transponder coil emits an electro magnetic waveform signal which excites the remote handset into transmitting a remobilisation signal. When remobilisation is requested, the anti-theft alarm ECU transmits an appropriate code to the ECM on Td5 models or the engine immobilisation ECU on 300Tdi models.

Active immobilisation

Active immobilisation is only invoked when the vehicle is locked using the remote handset. Active immobilisation performs the same engine disable functionality as the passive immobilisation previously described, but includes full CDL and activation of perimetric and volumetric alarm modes.

Emergency Key Access (EKA)

If the vehicle is in an immobilised condition and the remote handset is not available or inoperable, an EKA procedure using the vehicle key is available to remobilise the engine systems. The EKA code is supplied with the vehicle and is shown on the security card supplied with the owners handbook.

NOTE: This feature is only available in markets where full alarm functionality is specified.

The EKA code involves the input of a unique four digit code which is entered using the ignition switch and the drivers door switch. Note that the alarm sounder will operate as soon as the drivers door is opened and will continue until the sequence is successfully completed.

To enter the code (2, 3, 4, 5 for example) perform the following steps:

1. Remove the handset from the key ring and position the handset well away from the ignition switch when entering the code.
2. Open the driver's door and immediately insert the key in the ignition switch and turn the ignition switch to position II. Hold this position until the alarm sounds, then switch the ignition off (position 0) and close the driver's door.
3. Enter the first digit of the code. Turn the ignition on (to position II) and then off twice. Open and close the driver's door to enter the first digit.
4. Enter the second digit. Turn the ignition on and then off, three times. Open and close the driver's door to enter the second digit.
5. Enter the third digit. Turn the ignition on and then off, four times. Open and close the driver's door to enter the third digit.
6. Enter the fourth digit. Turn the ignition on and then off, five times. Open and close the driver's door to enter the fourth digit. If the code has been entered correctly, the alarm LED in the instrument pack will extinguish and the engine can be started after the last closure of the driver's door.

If a digit is incorrectly entered, holding the ignition switch in the on position for more than 5 seconds will reset the sequence. The code must then be re-entered from the beginning.

If the EKA code is correctly entered, the security LED will illuminate for 1 second, the immobilisation will be disabled and the alarm sounder will cease to operate.

If the EKA code is incorrectly entered, the alarm sounder will sound twice and the correct code must be re-entered, If the EKA code is incorrectly entered three times the system invokes a 30 minute lockout. This is signalled by the LED flashing with a long illuminated period followed by a short extinguished period for the lockout duration.

NOTE: Disabling the alarm and immobilisation system using the EKA procedure is only valid for one ignition on/off cycle. When the ignition is switched off, the immobilisation system will be activated after a period of 30 seconds. If the remote handset is still unavailable, the EKA procedure will have to be repeated each time the vehicle is to be driven.

CENTRAL DOOR LOCKING (CDL) - FROM 02MY

The Central Door Locking (CDL) system is a new feature for 2002MY Defender.

NOTE: CDL operates all doors on Station Wagon and County Station Wagons. On all other Defender 2002MY variants, CDL operates on the driver and front and rear passenger doors only.

General

CDL operates on all doors, including the tail door and is operated by pressing the appropriate button on the remote handset, using the vehicle key in the drivers door lock or using the drivers door sill button.

The CDL system introduces electrically operated door latches which are controlled by the anti-theft alarm ECU, located behind the instrument pack. The anti-theft ECU receives a permanent power supply from fuse 6 in the passenger compartment fuse box. Each CDL latch motor is connected by two wires to the anti-theft ECU which alternately supplies power and earth connections to drive each motor to the lock or unlock positions.

If the latch motors are continually operated in a short period of time, the anti-theft ECU will suspend all CDL latch motor operation for 15 seconds to prevent the motors from overheating. Before suspension occurs the anti-theft ECU ensures that all the doors are left in the unlocked condition.

If the vehicle is locked, and the key is in the ignition switch or the ignition is on and the anti-theft alarm ECU inertia switch is tripped, all doors will be unlocked immediately and the hazard warning lamps will operate. To prevent accidental relocking, all latch motors will be inhibited until the anti-theft ECU senses that the drivers door is opened with the key removed from the ignition switch.

Locking of the vehicle using the remote handset is inhibited with the key in the ignition switch.

Slam Locking

With the introduction of CDL, slam locking of the drivers door is disabled. If an attempt is made to slam lock the vehicle, the anti-theft alarm ECU will unlock all doors.

CDL Using the Drivers Door Sill Button

Each door has a sill button to allow that door to be individually locked from inside the vehicle. The drivers door sill button has additional functionality which allows all doors to be locked from inside the vehicle from this one button.

When the driver door sill lock button is depressed, the CDL system enters a sill locked state, where all doors are locked but immobilisation and perimetric and volumetric sensing is suspended. CDL using the drivers sill lock button can be achieved with or without the key in the ignition switch and without the ignition being on.

If the CDL is in the sill locked state and the lock button on the remote handset is pressed, the volumetric and perimetric functions of the alarm system will become active and active engine immobilisation will be invoked.

CDL Using the Key

The driver and the passenger front doors are fitted with key barrel locks. Using the vehicle key in the passenger door will only lock or unlock that door. Using the key in the drivers door will operate the CDL system and lock or unlock all doors.

NOTE: The passenger door key barrel is connected to the door latch and has no electrical input to the anti-theft alarm ECU. The driver door key barrel is also connected to the door latch and its operation is monitored by the ECU only via the latch motor and the two wires connected to it.

When the vehicle is locked using the key in the drivers door, only CDL and perimetric protection is invoked. Volumetric protection and active immobilisation is not initiated.

CDL Using the Remote Handset

The remote handset has two buttons; lock and unlock. A single press on the lock button will lock all doors and invoke perimetric and volumetric protection and active immobilisation. Remote locking is inhibited if the transponder coil senses that the key is in the ignition switch.

When the vehicle is locked, a single press of the unlock button will unlock all doors and disable perimetric and volumetric protection. Immobilisation is only disabled using the transponder coil and the remote handset or the EKA procedure.

Security LED

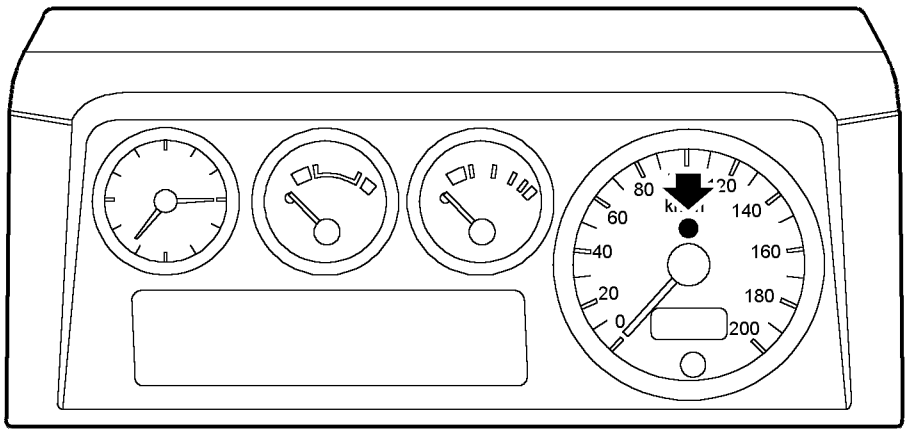

M86 5555

In addition to the alarm system status indications, the security LED also displays CDL system status.

The system confirms that the drivers door is open by illuminating the LED for the 10 second confirmation period. If any other door or the bonnet is open, the LED remains unlit for the 10 second confirmation period. After the 10 second confirmation period the LED reverts to the slow flash deterrent mode if the alarm is armed.

Interior Lamp Functionality

The anti-theft alarm ECU controls the interior lamp functionality. When the lamps are extinguished, they fade out to the off condition over a 2 second period.

The lamps are turned on by:
- Disarming the alarm using the remote handset
- Opening any door.

When the lamps are on, they will be extinguished by the following actions:
- If all doors are closed, the lamps will be extinguished after a 15 second delay period
- If any door is left open, the lamps will be extinguished after an 8 minute delay period
- If one of the above delay periods is active and the ignition is switched on or the alarm is armed, the lamps will be extinguished.

ANTI-THEFT ALARM SYSTEM SELF TEST

The anti-theft alarm ECU has a self test feature which allows all alarm inputs to be tested. To enter self test mode the following steps must be completed as follows:

1. Ensure that the driver's door is closed and the driver's window is open
2. Open the bonnet and with assistance depress and hold the bonnet switch
3. Release the bonnet switch and within 0.5 seconds turn the ignition switch on to position II
4. Quickly open the driver's door
5. Turn the ignition switch to the off position
6. Turn the ignition switch back to position II
7. If the self test mode has been entered successfully, confirmation will be given by the alarm sounder. If the ECU has not entered self test mode, repeat the above procedure.

Once in self test mode, the following test inputs will cause the security LED to illuminate and the engine immobilised warning lamp and the hazard warning lamps to flash. When an input is operated, non illumination of the security LED, the engine immobilised warning lamp and the hazard warning lamps indicates a fault for that input.

Perform the following steps to test each input for correct operation:
- Close and open the drivers door
- Open and close each of the passenger doors and the tail door in turn
- Close and open the bonnet (depress switch if bonnet still open)
- With drivers door closed, lock and unlock the driver's door using the vehicle key if spare key available. If spare key is not available, operate driver's sill button through open window
- Press the unlock button of the remote handset. This enters the volumetric self test mode and all other inputs will be disabled. Make a movement inside the vehicle. When the volumetric sensor is triggered the security LED will flash.

To exit the self test mode, turn the ignition switch to the off position.

FASCIA CONSOLE

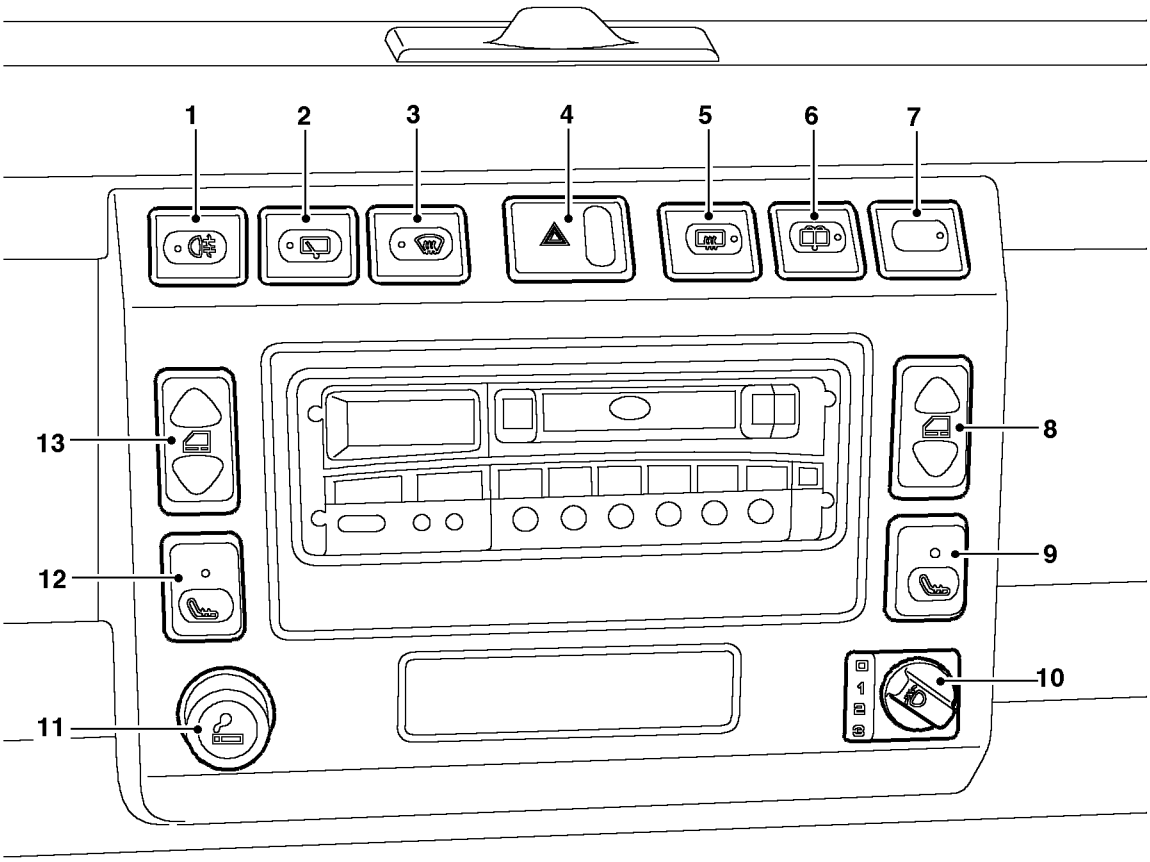

M86 5561A

1. Rear fog lamp switch
2. Rear wiper switch
3. Heated front screen switch (if fitted)
4. Hazard warning lamp switch
5. Heated rear window switch
6. Rear washer switch
7. Front fog lamps switch (if fitted)
8. RH front window switch
9. RH heated front seat switch (if fitted)
10. Headlamp levelling control switch
11. Cigar lighter (if fitted)
12. LH heated front seat switch (if fitted)
13. LH front window switch

For 02MY a new fascia console has been introduced to accommodate the additional switches for electric windows etc.

The console comprises a plastic moulding secured to the fascia with five screws. The new console allows existing switches to be repositioned and has provided the opportunity to commonise the switches with other Land Rover models. The switches and components located in the console are as follows:

- Cigar lighter (if fitted)
- Headlamp levelling control
- LH and RH heated front seat switches (if fitted)
- LH and RH front window lift switches
- Front fog lamp switch (if fitted)
- Rear fog lamp switch
- Rear wash/wipe switch
- Rear wiper switch
- Hazard warning lamp switch
- Heated rear window switch
- Heated front screen switch (if fitted)

A central cut-out in the console provides for the installation of the radio, where fitted, or a coin tray for markets without a standard radio installation.

HEATED FRONT SCREEN - FROM 02MY

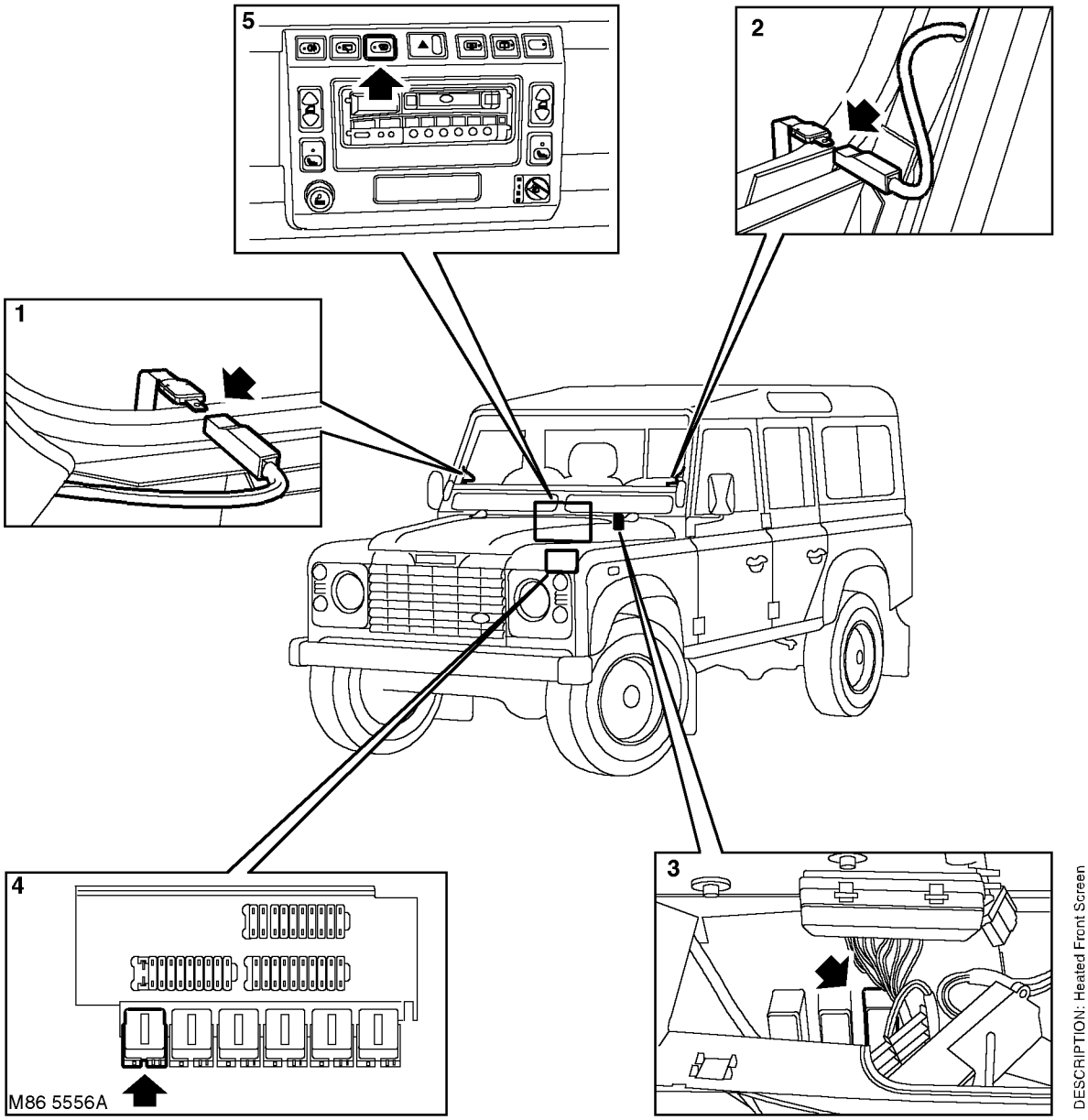

1. Heated front screen RH connector
2. Heated front screen LH connector
3. Heated front screen ECU (behind instrument pack)
4. Heated front screen relay (passenger compartment fuse box)
5. Heated front screen switch

The Heated Front Screen (HFS) is a new feature for 2002MY which is available as part of a cold climate pack on Td5 engine variants only. The HFS system comprises an HFS ECU, an HFS relay, a controlling switch and the HFS elements.

The HFS comprises two elements laminated in the windscreen. The elements are connected by bus bars within the screen and therefore the HFS has only one feed and one earth connector.

The HFS is controlled by the HFS ECU which determines when HFS operation is permitted. The ECU also has a timer which allows HFS operation for up to 8 minutes. The HFS ECU is located behind the instrument pack, adjacent to the dim/dip relay. The ECU is connected by a multiplug. The ECU receives an ignition feed via the satellite fuse box and an engine running signal from the engine oil pressure switch.

A non-latching switch for HFS operation is located in the fascia. The switch has a tell-tale lamp to indicate when the HFS screen is operative.

The HFS relay is located in the under seat fuse box and receives a permanent battery voltage supply via fusible link 1 in the under seat fuse box. The relay coil is connected to the HFS ECU and an earth point. When the relay is operated, battery voltage is supplied from the relay, via fuse 25 in the passenger compartment fuse box to the HFS element.

When the HFS switch is depressed, a momentary earth path is completed from the HFS ECU, through the switch to earth. This is sensed by the ECU as a request for HFS operation. If the ECU receives an ignition on signal and an oil pressure signal, it allows HFS operation. The ECU provides an output to the coil of the HFS relay. When the coil is energised, the contacts close and battery voltage, via fusible link 1 in the under seat fuse box is supplied to the HFS element, via fuse 25 in the passenger compartment fuse box. The feed is also supplied via a splice joint to the HFS switch to illuminate the tell tale lamp in the switch.

The HFS ECU will allow screen operation for up to 8 minutes, after which it removes the feed to the HFS relay coil, which, after the contacts open, removes the supply to the HFS element and simultaneously extinguishing the tell tale lamp in the switch. If, during the timed operation period, the HFS ECU receives an additional request signal from operation of the switch, HFS operation is stopped.

When operating, the HFS element draws approximately 25 Amps. To prevent excess drain on the vehicle battery, if the ignition on signal and/or the oil pressure switch (engine running) signal is lost, the HFS ECU de-energises, if already operating, or will not energise the HFS relay.

HEATED FRONT SEATS - FROM 02MY

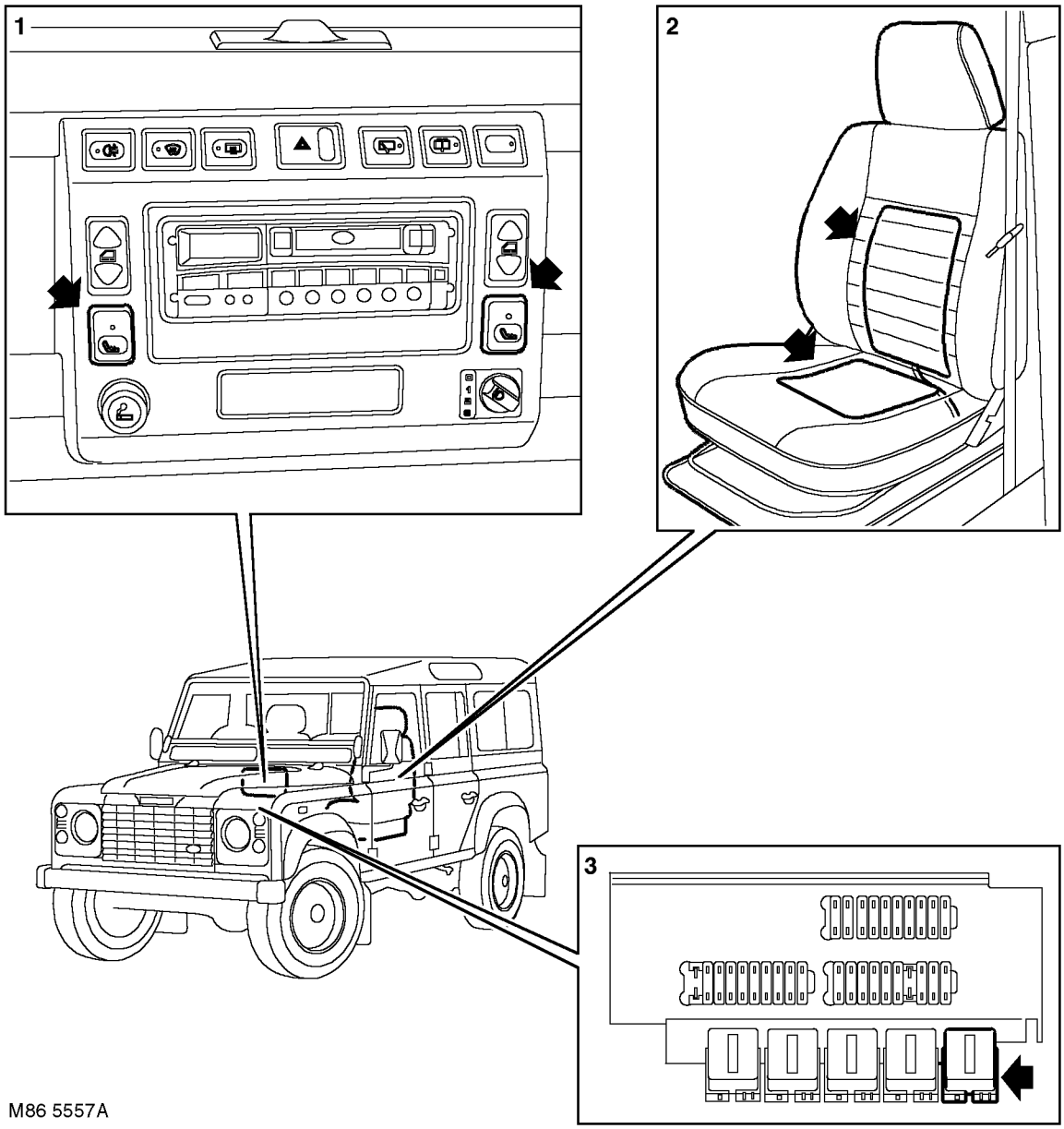

1. LH and RH seat heater switches
2. Seat heater cushion and squab elements
3. Seat heat/Window lift relay (passenger compartment fuse box)

Heated front seats are a new feature for 2002MY and are available as part of a cold climate pack on Td5 engine variants only. The heated seats system comprises, two latching switches, a seat relay and heater elements.

The latching switches are located in the fascia. Each switch individually controls its related seat heater elements. Each switch contains a tell tale lamp to indicate when the seat heaters are active. There is no timer function for the seat heater operation and the seat heaters will remain active for as long as the switch is latched in and the ignition is in position II.

The seat heater relay is located in the passenger compartment fuse box and shares its supply and operation with the front window lift system. The relay receives a permanent battery voltage supply via fusible links 1 and 3 in the under seat fuse box and fuse 28 in the satellite fuse box. The relay coil is connected to the ignition switch via fuse 7 in the passenger compartment fuse box and an earth point. When the ignition switch is moved to position II, the relay coil is energised and the contacts close. Power is supplied from the relay to each of the seat heater switches.

The heater elements are fitted in the seat cushion and squab on the drivers and passenger front seats and are wired in series. The wiring looms for the elements is long enough to allow the seat squab to be lifted for access to the under seat fuse box or the storage bin/battery without straining the wiring. The centre seat, if fitted, does not have heater elements.

The cushion element receives the feed from the switch and contains a thermostatically controlled switch. When the element temperature reaches 37 ± 3°C (98 ± 3°F) the thermostat cuts the supply to the cushion and squab elements for that seat. As the temperature of the element falls to 28 ± 3°C (82 ± 3°F), the thermostat will close the switch contacts allowing power to flow to both elements causing them to heat up again. In this way the thermostat maintains the cushion and squab element temperatures between the figures stated.

ELECTRIC FRONT WINDOWS - FROM 02MY

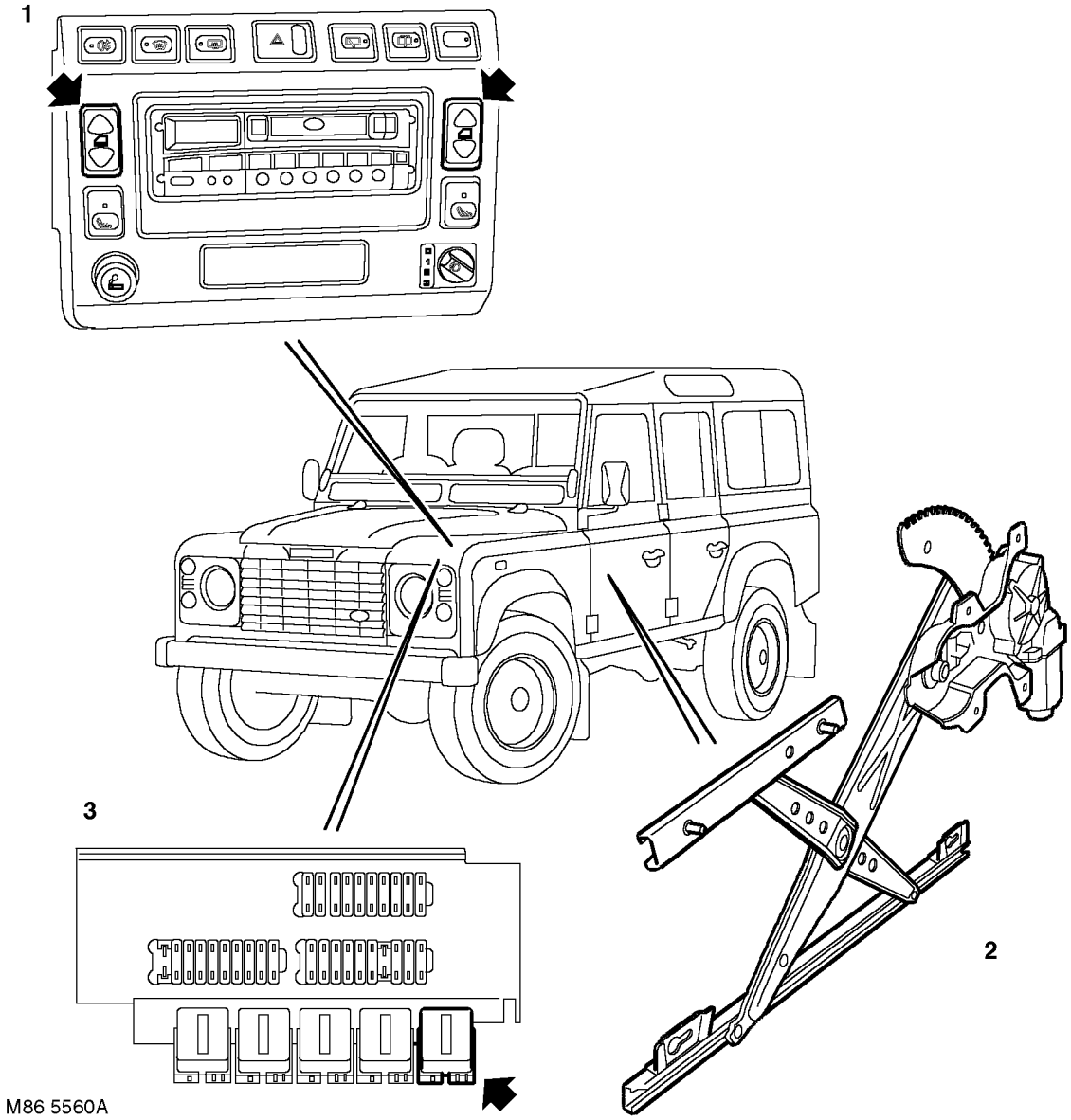

1. LH and RH window lift switches
2. Motor and regulator assembly
3. Seat heat/Window lift relay

Electric window lift is a new feature for 02MY. The electric windows are only available on the front driver and passenger doors. Rear passenger doors retain the manual window lift regulator mechanism.

The window lift system comprises a window motor in each front door, two window lift switches located in the fascia switch panel and a relay, located adjacent to the passenger compartment fusebox. The windows are only operative when the ignition switch is in position II.

Each window lift motor is located in the door, behind the trim casing. The motor and regulator form a handed assembly and are not available separately as serviceable items.

The window lift relay receives a permanent battery feed via fusible links 1 and 3 in the under seat fuse box. The relay coil has one side connected to earth with the other side receiving a feed from the ignition switch position II. When the ignition is in position II, the relay is energised and battery voltage is supplied to each of the window lift switches. On vehicles with heated seats, the relay is shared with the heated seat circuit.

Each switch has two wires to its applicable motor. When the switch is operated in either the up or down position, one wire is supplied with a feed and the other is connected to earth as applicable for the selection made.

Each motor has thermal cut-out protection. If the window reaches the top or bottom limit of its travel or an object obstructs the window, the thermal cut-out will sense the increased load on the motor and cut the power supply to the motor brush contacts.

The cut-out time is between 3.5 to 5.0 seconds, with a time to restart of between 1 to 10 seconds. These figures are based on an ambient temperature of 20°C (68°F) and a voltage of 13.5V.

PASSENGER COMPARTMENT FUSE BOX FROM 02MY

The increase in electrical systems on Defender 02MY vehicles has necessitated an increase in the number of fuses required.

The passenger compartment fuse box now contains three rows of fuses instead of the previous two rows and relays to control the CDL system, heated front screen, headlamps, anti-theft alarm ECU and seat heaters and window lift system.

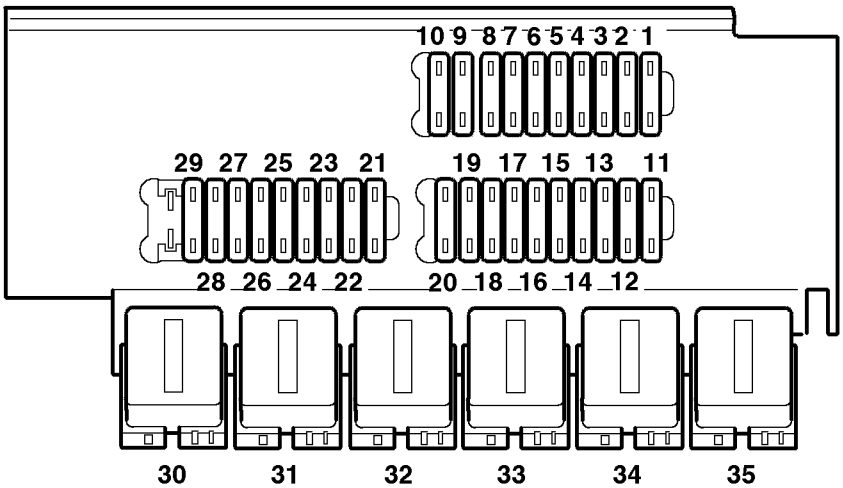

M86 5558A

1. Fuse 8 - Anti-theft alarm ECU/BBUS (10A)
2. Fuse 9 - Front wiper motor and washer pump (15A)
3. Fuse 10 - Rear wiper relay (10A)
4. Fuse 11 - ABS ECU (10A)
5. Fuse 12 - Engine Control Module (10A)
6. Fuse 13 - Brake pedal switch (10A)
7. Fuse 14 - Reverse lamp switch/Glowplugs (10A)
8. Fuse 15 - Miscellaneous relay control. See Electrical Library (5A)
9. Fuse 16 - Cigar lighter/Heater blower (20A)
10. Fuse 17 - Radio (5A)
11. Fuse 18 - LH side lamps/trailer pick up (10A)
12. Fuse 19 - RH side lamps/trailer pick up (10A)
13. Fuse 20 - Headlamp levelling/Illumination (10A)
14. Fuse 21 - Direction indicators (10A)
15. Fuse 22 - RH headlamp dip beam (10A)
16. Fuse 23 - LH headlamp dip beam (10A)
17. Fuse 24 - RH headlamp main beam (10A)
18. Fuse 25 - LH headlamp main beam (10A)
19. Fuse 26 - Rear fog lamp ECU (10A)
20. Fuse 27 - Alarm relay (10A)
21. Fuse 28 - Air conditioning blower relay (30A)
22. Fuse 29 - Air conditioning compressor relay/cooling fan relay (20A)
23. Fuse 30 - Interior lamps/radio/alarm LED/clock/diagnostic socket/tachometer (South African vehicles only) (5A)
24. Fuse 31 - Hazard warning lamps (15A)
25. Fuse 32 - Heated rear window (20A)
26. Fuse 33 - Seat heat relay (20A)
27. Fuse 34 - RH window lift switch (20A)
28. Fuse 35 - LH window lift switch (20A)
29. Fuse 36 - Heated front screen (30A)
30. Relay - Heated Front Screen
31. Relay - Starter motor
32. Relay - Heated Rear Window
33. Relay - Headlamps
34. Relay - Anti-theft alarm
35. Relay - Seat heat/window lift

UNDER SEAT FUSE BOX FROM 02MY

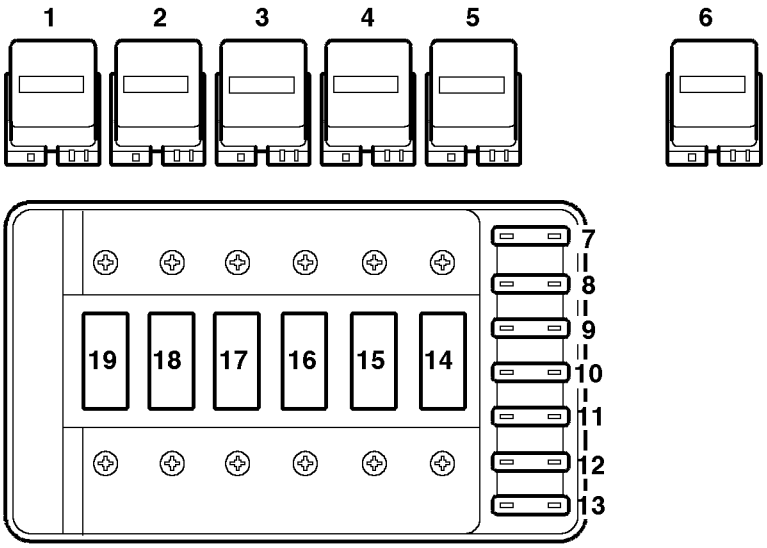

M86 5559A

1. A/C Relay (if fitted)
2. A/C relay (if fitted)
3. Glow plug relay
4. Main relay
5. Fuel pump relay
6. ABS Return pump relay
7. Fuse 7 - Central Door Locking (CDL) and BBUS (20A)
8. Fuse 6 - Anti-theft alarm ECU (15A)
9. Fuse 5 - Main relay (30A)
10. Fuse 4 - Fuel pump relay (20A)
11. Fuse 3 - Horn/HRW relay (20A)
12. Fuse 2 - Accessory socket (20A)
13. Fuse 1 - ABS ECU (30A)
14. Fusible link 6 - Lights (30A)
15. Fusible link 5 - Ignition switch/Starter relay (60A)
16. Fusible link 4 - ABS Pump relay (30A)
17. Fusible link 3 - Window lift/Seat heat relay (60A)
18. Fusible link 2 - Air conditioning (60A)
19. Fusible link 1 - Glow plugs/Heated front screen (100A)

HEADLAMPS - ALIGN BEAM

Service repair no - 86.40.17

Check

1. Align suitable beam setting equipment to headlamp.
2. Ensure headlamp height adjustment switch set to 'O' and headlamps switch on.
   Headlamp setting = 1.2% below horizontal and parallel.

Adjust

3. Align beam setting equipment to 2nd headlamp and adjust 2nd lamp as necessary.
4. Switch off headlamps.
5. Remove beamsetter.

SOLENOID/MOTOR - FRONT DOOR - ADJUST

Service repair no - 86.26.21

Adjust

1. Remove door trim casing. ***See CHASSIS AND BODY, Repair.***

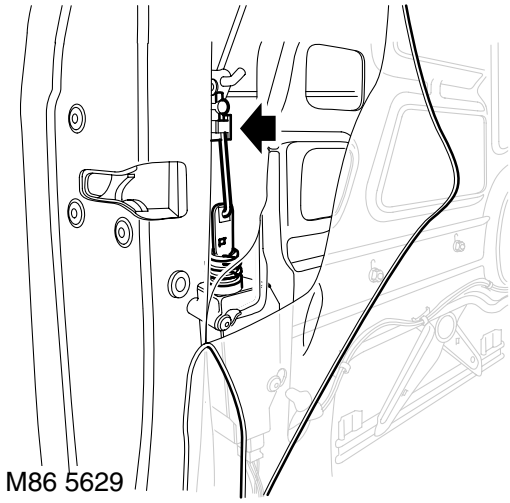

2. Carefully peel back plastic sheet to expose mechanism.
3. Release clip and detach solenoid link from latch.

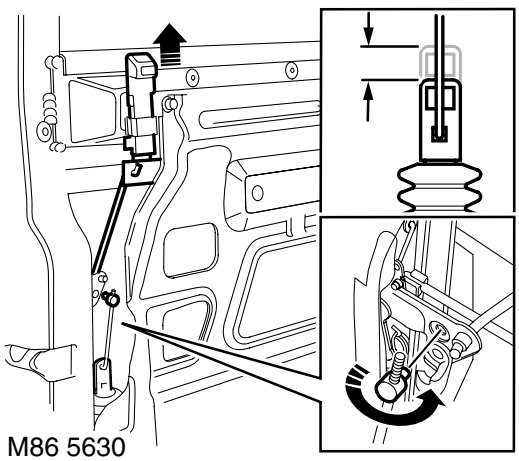

4. Ensure sill button is fully raised.
5. Fully extend solenoid actuator then lower 3.5 mm +/- 1.00 mm.
6. Whilst holding actuator in this position, adjust length of link, until link pin is aligned with hole in latch lever.
7. Connect link and secure with clip.
8. Secure plastic sheet.
9. Fit door trim casing. ***See CHASSIS AND BODY, Repair.***

BELT - AUXILLARY DRIVE

Service repair no - 86.10.03

Remove

1. Remove cooling fan. ***See COOLING SYSTEM, Repair.***

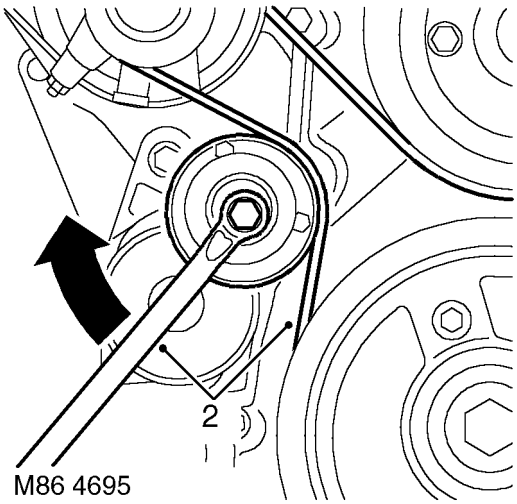

2. Release drive belt tensioner using a 15 mm ring spanner and release belt from pulleys.

Refit

3. Clean drive belt pulley grooves and ensure grooves are not damaged.
4. Fit new drive belt around pulleys, ensure belt is correctly aligned in pulley grooves.
5. With assistance, hold tensioner fully clockwise and fit drive belt around remaining pulley.
6. Fit cooling fan. ***See COOLING SYSTEM, Repair.***

HARNESS - INJECTORS

Service repair no - 86.70.22

Remove

1. Remove camshaft cover gasket. ***See ENGINE , Repair.***

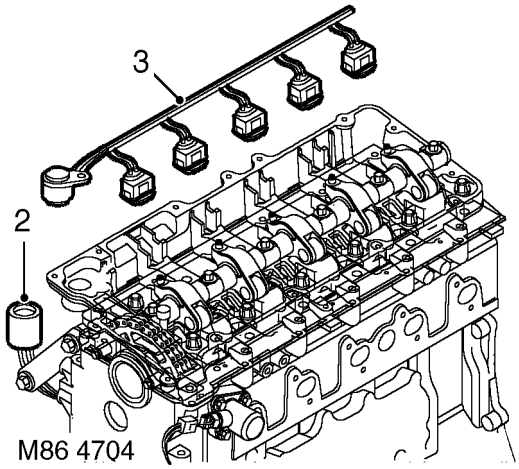

2. Disconnect engine harness from injector harness.
3. Disconnect multiplugs from injectors.
4. Release injector harness from camshaft carrier and remove harness.

Refit

5. Fit new ’O’ rings to injector harness connector.
6. Position harness and locate connector to camshaft carrier.
7. Connect injector and engine harness multiplugs.
8. Fit camshaft cover gasket. ***See ENGINE , Repair.***

STARTER MOTOR

Service repair no - 86.60.01

Remove

1. Remove battery cover.
2. Disconnect battery negative lead.
3. Remove fixings and remove underbelly panel.

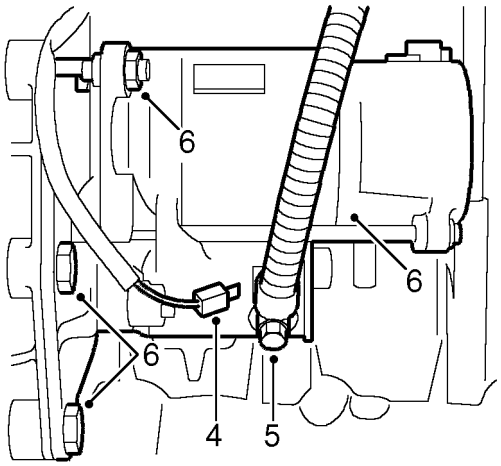

M86 4702

4. Disconnect Lucar from starter solenoid.
5. Remove nut and disconnect battery lead from starter solenoid.
6. Remove nut and 2 bolts securing starter to gearbox housing. Remove starter.

Refit

7. Clean starter motor and mating face.
8. Position starter and tighten nut and 2 bolts to ***27 Nm (20 lbf.ft)***
9. Connect lead to starter solenoid and tighten nut.
10. Connect Lucar to starter solenoid.
11. Fit underbelly panel.
12. Reconnect battery negative lead.
13. Fit battery cover.

CENTRE HIGH MOUNTED STOP LIGHT (CHMSL) - UP TO 02MY

Service repair no - 86.41.32

Remove

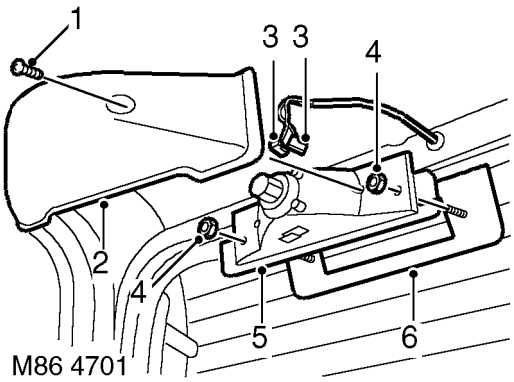

M86 4701

1. Remove 2 screws securing lamp cover.
2. Remove lamp cover.
3. Disconnect 2 Lucars from bulb holder.
4. Remove 2 nuts securing lamp to tail door.
5. Remove lamp.
6. Collect gasket.

Refit

7. Position gasket.
8. Position lamp.
9. Secure lamp with nuts.
10. Connect Lucars to bulb holder.
11. Fit lamp cover.
12. Secure cover with screws.

ALTERNATOR

Service repair no - 86.10.02

Remove

1. Remove auxilliary drive belt. ***See this Section.***

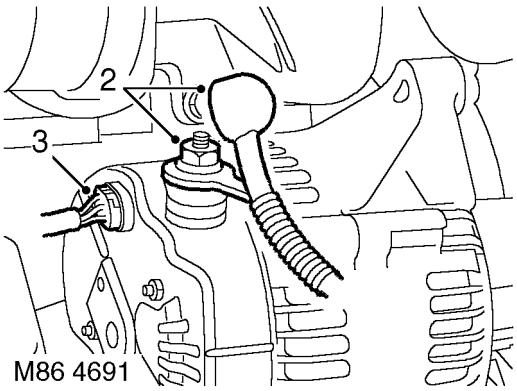

2. Release cover and remove nut securing lead to alternator.
3. Disconnect alternator multiplug.

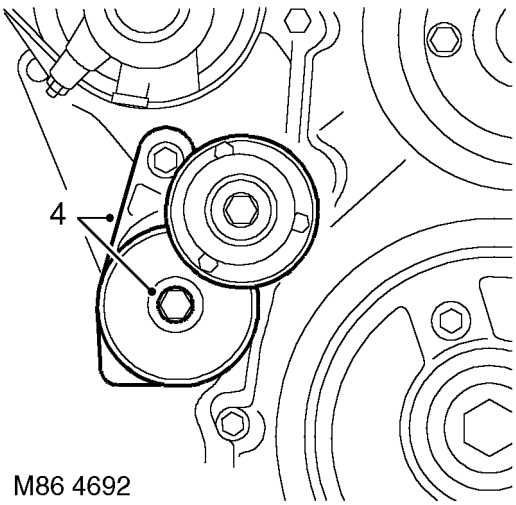

4. Remove bolt (LH thread) and remove auxiliary drive belt tensioner.

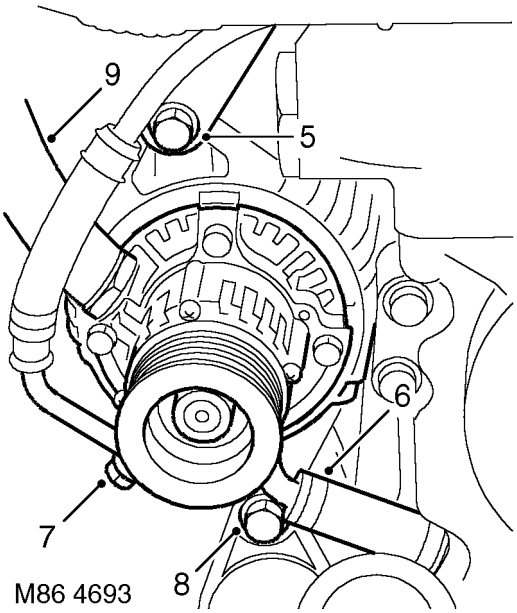

5. Remove bolt securing support stay to alternator.
6. Release clip securing lubrication drain hose to vacuum pump.
7. Loosen vacuum pump lubrication pipe from cylinder head and discard 'O' ring.
8. Remove bolt securing alternator and release from mounting bracket.
9. Disconnect hose from vacuum pump.
10. Remove alternator taking care not to damage radiator cooling fins.

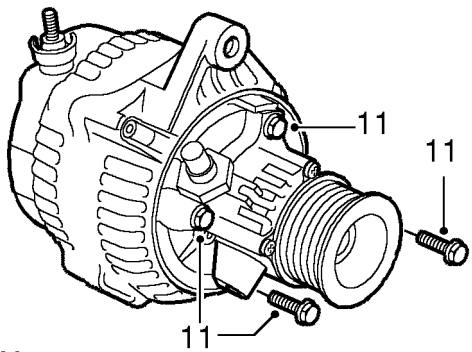

11. Remove 4 bolts, and remove vacuum pump from alternator.

CAUTION: Plug the connections.

Refit

12. Clean mating face of alternator and vacuum pump.
13. Fit vacuum pump to alternator and tighten bolts to ***10 Nm (7 lbf.ft)*** .
14. Position alternator and connect multiplug.
15. Connect vacuum hose and oil drain hose to vacuum pump and secure clip.
16. With assistance align alternator to mounting bracket and fit but do not tighten bolt.
17. Fit bolt securing support stay to alternator and tighten to ***25 Nm (18 lbf.ft)*** .
18. Tighten alternator to mounting bracket bolt to ***45 Nm (33 lbf.ft).***
19. Using new 'O' ring, fit and tighten lubrication pipe union to ***10 Nm (8 lbf.ft)*** .
20. Connect lead to alternator and tighten nut to ***6 Nm (4.4 lbf.ft)*** .
21. Fit auxilliary drive belt tensioner and tighten bolt to ***50 Nm (37 lbf.ft)*** .
22. Fit auxilliary drive belt. ***See this Section.***

HORN - LH

Service repair no - 86.30.10

Remove

1. Remove LH headlamp. ***See this Section.***

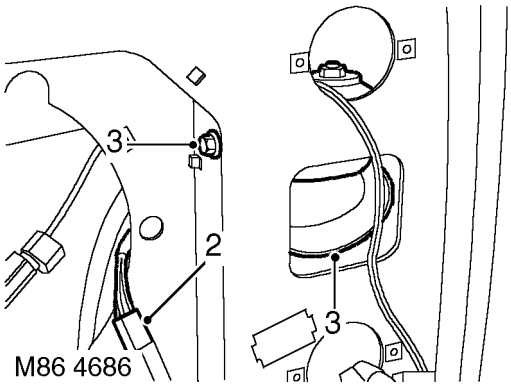

2. Disconnect horn multiplug.
3. Remove nut and remove horn from mounting bracket.

Refit

4. Position horn, tighten securing and connect multiplug.
5. Fit LH headlamp. ***See this Section.***

HEADLAMP

Service repair no - 86.40.49

Remove

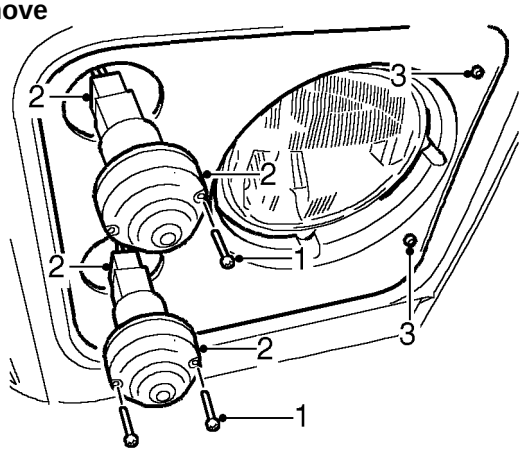

M86 4699

1. Remove 4 screws and release side and indicator lamps from wing.
2. Disconnect multiplugs and remove side and indicator lamps.
3. Remove 2 screws and remove headlamp finisher.

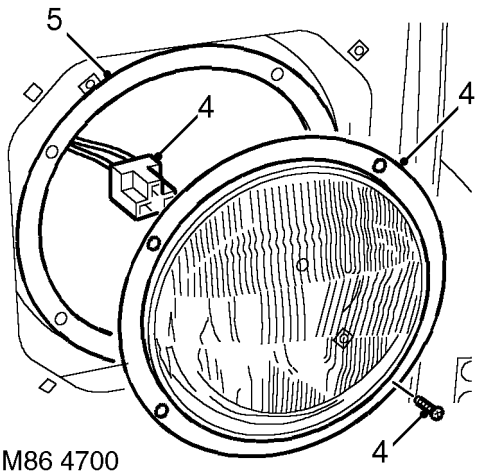

M86 4700

4. Remove 4 screws securing headlamp to wing, disconnect multiplugs and remove headlamp.
5. Remove headlamp seal.

Refit

6. Fit headlamp seal.
7. Position headlamp, connect multiplugs, fit and tighten headlamp screws.
8. Fit headlamp finisher and secure with screws.
9. Position side and indicator lamps, connect multiplugs and secure with screws.
10. Reset headlamp alignment. ***See Adjustment.***

LAMP - TAIL

Service repair no - 86.40.70

Remove

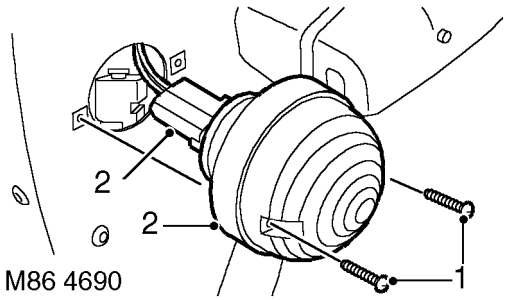

1. Remove 2 screws securing tail lamp to body.
2. Disconnect multiplug and remove lamp.

Refit

3. Position tail lamp and connect multiplug.
4. Fit and tighten lamp securing screws.

RADIO

Service repair no - 86.50.03

Remove

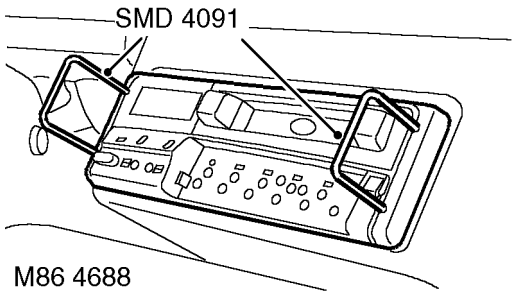

1. Using tool **SMD 4091** release radio from cage.

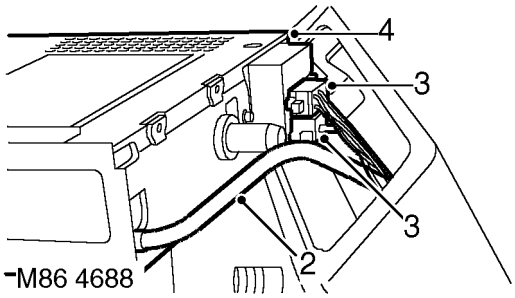

2. Disconnect coaxial cable from radio.
3. Disconnect 2 multiplugs from radio.
4. Remove radio from fascia.

Refit

5. Position radio to fascia and connect multiplugs.
6. Connect coaxial cable to radio.
7. Secure radio in cage.

SPEAKER - FRONT

Service repair no - 86.50.15

Remove

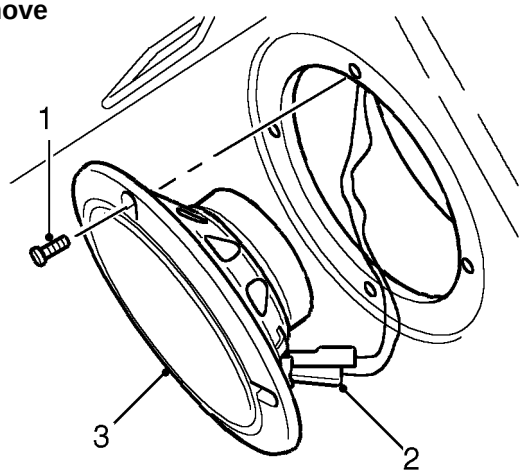

M86 4687

1. Remove 4 screws securing speaker to fascia.
2. Release speaker from fascia and disconnect 2 Lucars.
3. Remove speaker.

Refit

4. Position speaker to fascia and connect Lucars.
5. Fit speaker to fascia and secure with screws.

SWITCH - TRANSMISSION BRAKE

Service repair no - 86.65.45

Remove

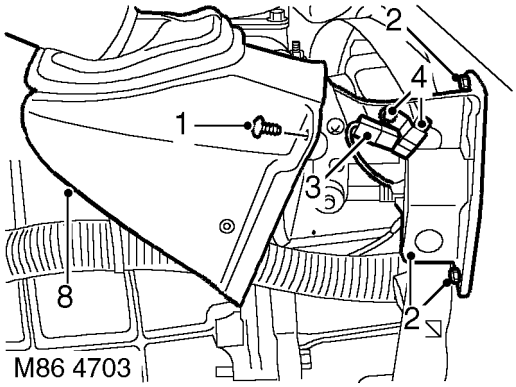

M86 4703

1. Release cover from transmission brake lever.
2. Remove 2 bolts and release transmission brake lever from body.
3. Disconnect Lucar from transmission brake warning switch.
4. Remove 2 screws securing switch from brake lever and remove switch.

Refit

5. Fit switch to brake lever and tighten screws.
6. Connect switch Lucar.
7. Position brake lever and tighten bolts to ***22 Nm (16 lbf.ft).***
8. Position cover to brake lever.

LAMP - FRONT FLASHER

Service repair no - 86.40.42

Remove

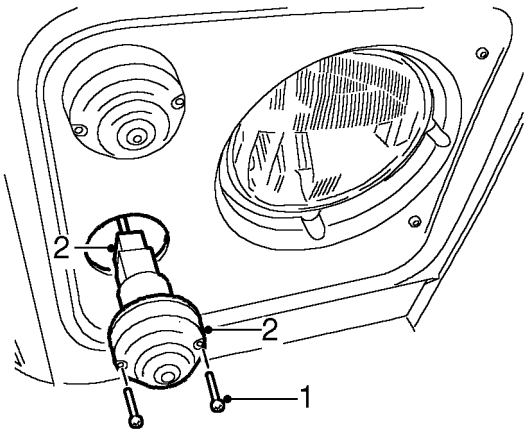

M86 4696

1. Remove 2 screws securing flasher lamp to front wing.
2. Disconnect multiplug and remove lamp.

Refit

3. Position flasher lamp and connect multiplug.
4. Fit and tighten lamp securing screws.

BATTERY - DISCONNECT - FROM 02MY

Service repair no - 86.15.99

Remove

1. Remove front seat cushion.

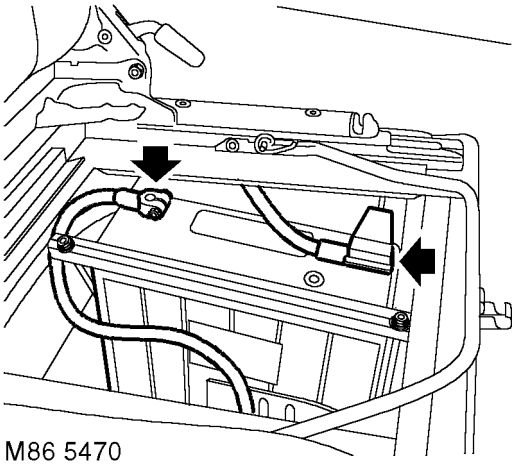

M86 5470

2. Release clip and remove battery cover.
3. Loosen bolt securing negative earth lead, do not remove lead at this stage.
4. Fit ignition key, turn to position 'II'. Turn ignition off, remove key from lock and immediately remove negative lead.

Refit

5. Connect negative lead to negative terminal and tighten bolt to ***10 Nm (7 lbf.ft).***
6. Fit and secure battery cover.
7. Fit seat cushion.

MOTOR & REGULATOR - FRONT DOOR - FROM 02MY

Service repair no - 86.25.03

Remove

1. Remove plastic sheet. ***See CHASSIS AND BODY, Repair.***

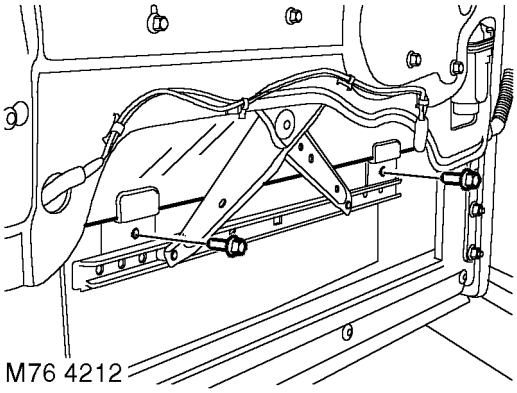
M76 4212

2. Lower glass and remove 2 bolts securing door glass to regulator.

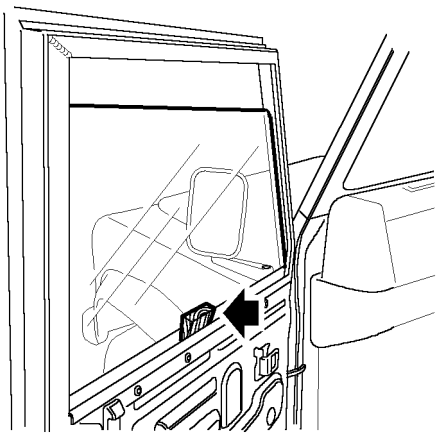
M76 4213

3. Release glass from regulator, raise and wedge in raised position.

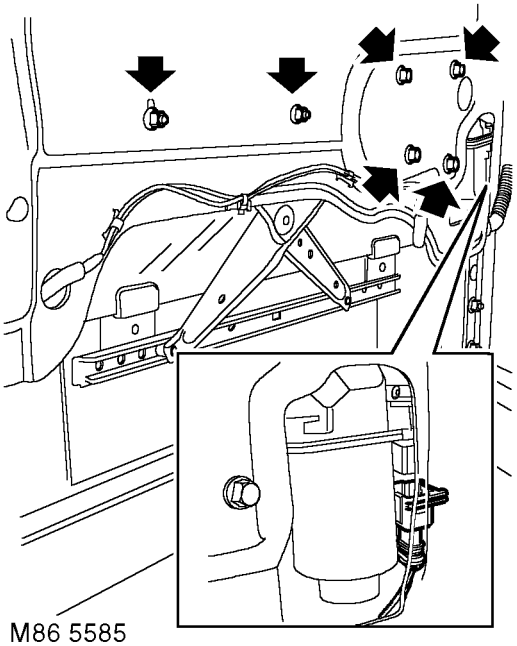
M86 5585

4. Disconnect multiplug from motor.
5. Remove 4 bolts and 2 nuts securing motor and regulator assembly.
6. Release and remove motor and regulator assembly.

Refit

7. Fit motor and regulator assembly, fit nuts and bolts and tighten to ***10 Nm (7 lbf.ft).***
8. Connect multiplug to motor.
9. Remove wedges, lower glass and locate to regulator. Fit bolts and tighten to ***6 Nm (4 lbf.ft).***
10. Raise and lower glass to check operation.
11. Fit plastic sheet. ***See CHASSIS AND BODY, Repair.***

SWITCH - FASCIA - FROM 02MY

Service repair no - 86.25.18

Remove

1. Remove radio. ***See this Section.***

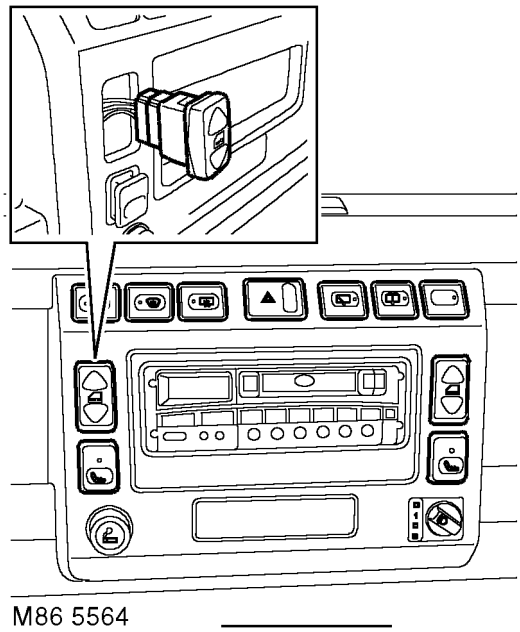

2. Release switch, disconnect multiplug and remove switch.

Refit

3. Connect multiplug to switch and fit switch to panel.
4. Fit radio. ***See this Section.***

HARNESS - FRONT DOOR - FROM 02MY

Service repair no - 86.25.20

Remove

1. Remove door lock solenoid. ***See this Section.***

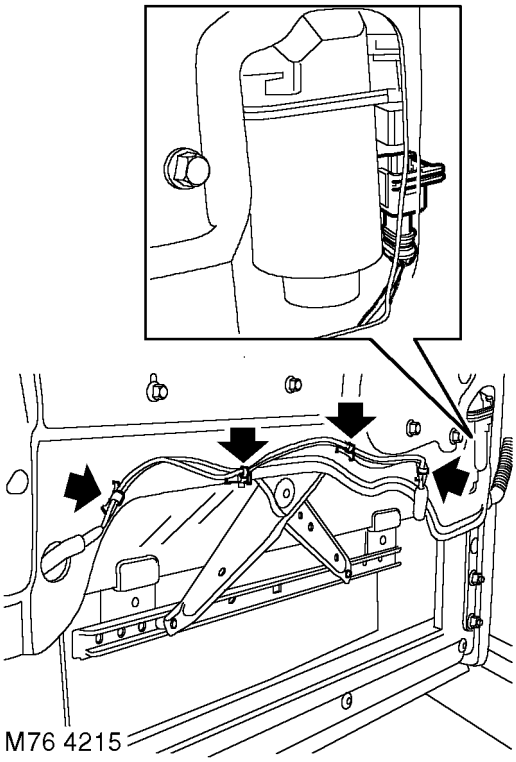

2. Carefully peel back section of plastic sheet for access to harness.
3. Release clips securing harness to panel.
4. Disconnect multiplug from motor.
5. Release harness sleeve and withdraw harness from door.

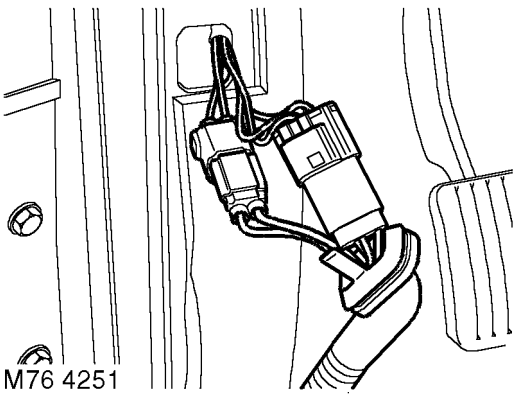

6. Release harness sleeve and withdraw harness multiplugs from 'A' post.
7. Disconnect 2 multiplugs and remove harness.

Refit

8. Position harness and connect multiplugs.
9. Feed multiplugs into 'A' post and secure harness sleeve.
10. Connect multiplug to motor.
11. Secure harness clips and sleeve.
12. Secure plastic sheet.
13. Fit door lock solenoid. ***See this Section.***

SOLENOID/MOTOR - TAIL DOOR - FROM 02MY

Service repair no - 86.26.02

Remove

1. Remove tail door trim casing. ***See CHASSIS AND BODY, Repair.***

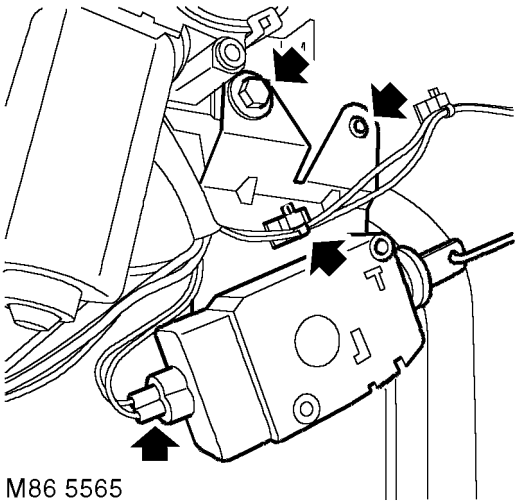

M86 5565

2. Disconnect multiplug from solenoid.
3. Remove bolt and screw securing solenoid to door.
4. Release clip securing harness to solenoid mounting bracket.
5. Remove solenoid assembly from operating rod.

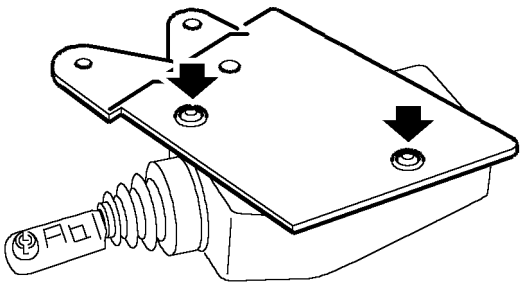

M86 5566

6. Remove 2 screws securing solenoid to mounting bracket.

Refit

7. Fit solenoid to mounting bracket and secure with screws.
8. Connect operating rod to solenoid assembly.
9. Fit solenoid to door, fit screw and tighten bolt to ***6 Nm (4 lbf.ft).***
10. Position harness to solenoid mounting bracket and secure with clip.
11. Connect multiplug to solenoid.
12. Fit tail door trim casing. ***See CHASSIS AND BODY, Repair.***

SOLENOID/MOTOR - FRONT DOOR - FROM 02MY

Service repair no - 86.26.08

Remove

1. Remove door trim casing. ***See CHASSIS AND BODY, Repair.***

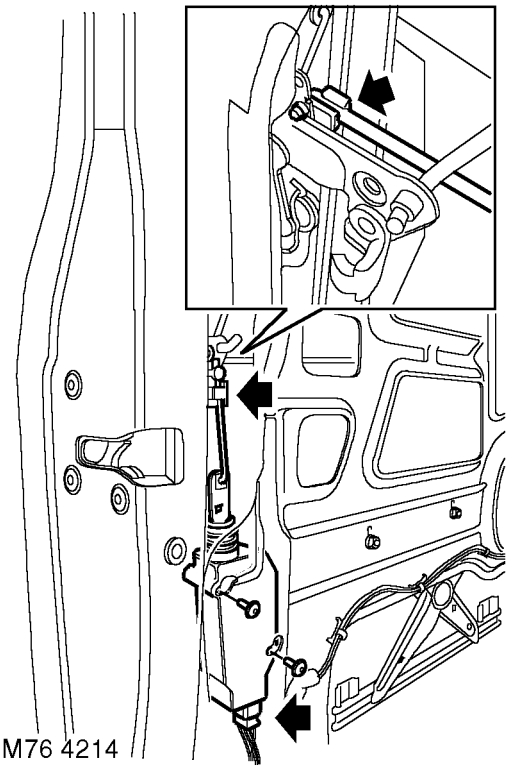

2. Carefully peel back plastic sheet to expose mechanism.
3. Release clip, detach and remove lock solenoid link.
4. Loosen 2 screws securing solenoid, release solenoid from mounting panel, disconnect multiplug and remove solenoid.

Refit

5. Connect multiplug to solenoid, locate solenoid to mounting panel and tighten screws.
6. Fit and secure link.
7. Secure plastic sheet.
8. Fit door trim casing. ***See CHASSIS AND BODY, Repair.***
9. Adjust door lock solenoid. ***See Adjustment.***

SOLENOID/MOTOR - REAR DOOR - FROM 02MY

Service repair no - 86.26.09

Remove

1. Remove plastic sheet. ***See CHASSIS AND BODY, Repair.***

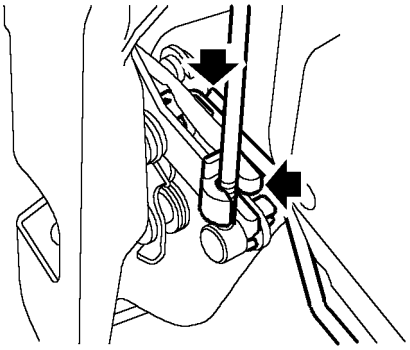

M76 4259

2. Release clip, detach and remove lock solenoid link.
3. Release clip and disconnect interior handle link from latch mechanism.

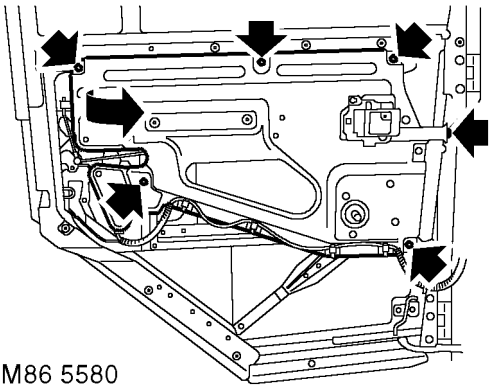

M86 5580

4. Remove 3 bolts securing mounting panel.
5. Loosen remaining bolts and nut, ease mounting panel away from door and retain in this position for access.

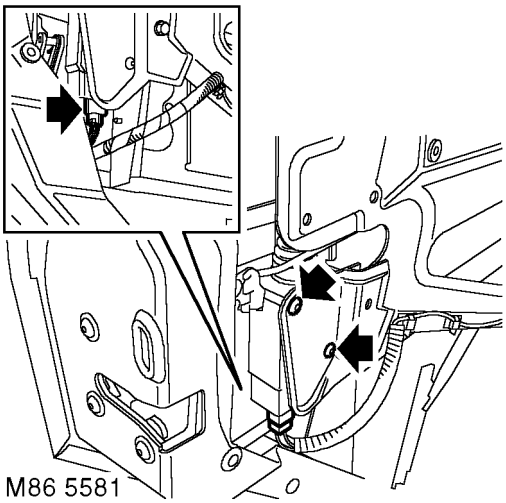

M86 5581

6. Disconnect multiplug from solenoid.
7. Remove 2 screws securing solenoid.

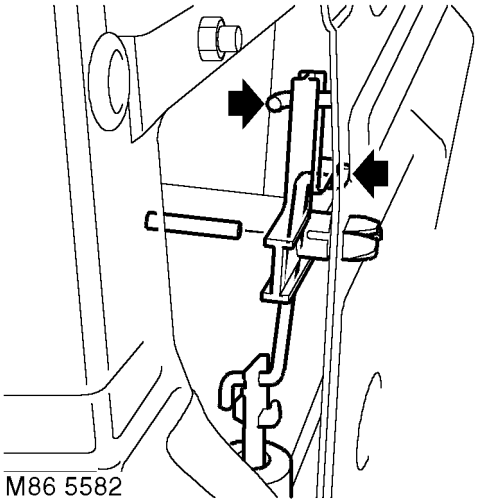

M86 5582

8. Remove centre pin from bellcrank pivot and release pivot from mounting panel.
9. Release bellcrank from sill button link and remove from lock solenoid link.
10. Remove door lock solenoid.
11. Remove link from solenoid.

Refit

12. Fit link to solenoid, position solenoid, fit bellcrank and connect to sill button link.
13. Secure bellcrank to mounting panel and fit centre pin.
14. Align solenoid and fit and tighten screws.
15. Connect multiplug to solenoid.
16. Fit mounting panel bolts and tighten all bolts and nut to ***10 Nm (7 lbf.ft).***
17. Connect interior handle link to latch and secure with clip.
18. Fit and secure solenoid link.
19. Fit plastic sheet. ***See CHASSIS AND BODY, Repair.***

HARNESS - REAR DOOR - FROM 02MY

Service repair no - 86.26.19

Remove

1. Remove rear door trim casing. ***See CHASSIS AND BODY, Repair.***

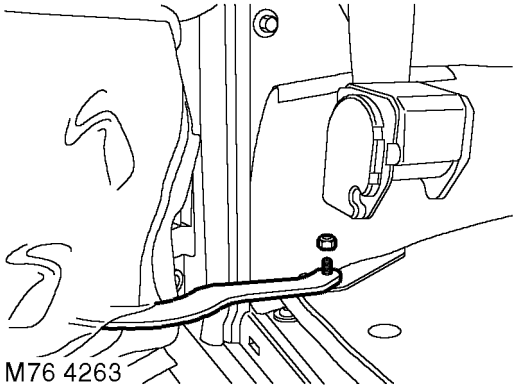

M76 4263

2. Remove nut and disconnect check strap.

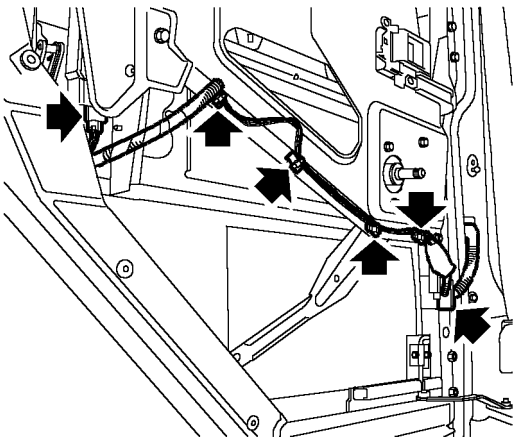

M76 4261

3. Carefully peel back section of plastic sheet for access to harness.
4. Disconnect multiplug from solenoid.
5. Release clips securing harness to panel.
6. Release harness sleeve and withdraw harness from door.

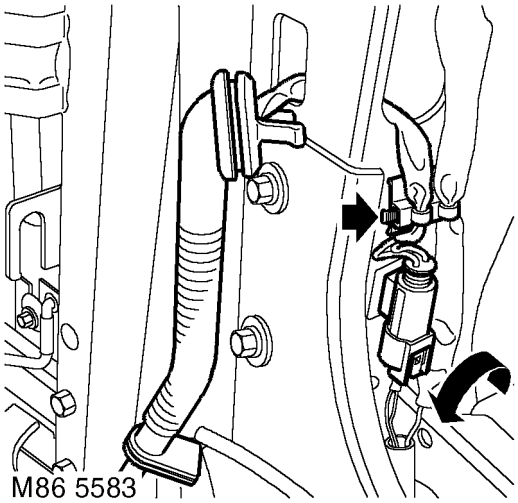

7. Release multiplug from location at base of 'B/C' post and disconnect multiplug.
8. Release clip securing harness to 'B/C' post.
9. Release harness sleeve and remove harness.

Refit

10. Feed harness through 'B/C' post, connect and secure multiplug.
11. Clip harness to 'B/C' post and secure sleeve.
12. Connect multiplug to motor.
13. Secure harness clips and sleeve.
14. Connect check strap, fit nut and tighten sufficiently to allow check strap to pivot without rattling.
15. Secure plastic sheet.
16. Fit door trim casing. ***See CHASSIS AND BODY, Repair.***

REVERSE AND FOG GUARD LAMP - BULB

Service repair no - 86.40.90

Remove

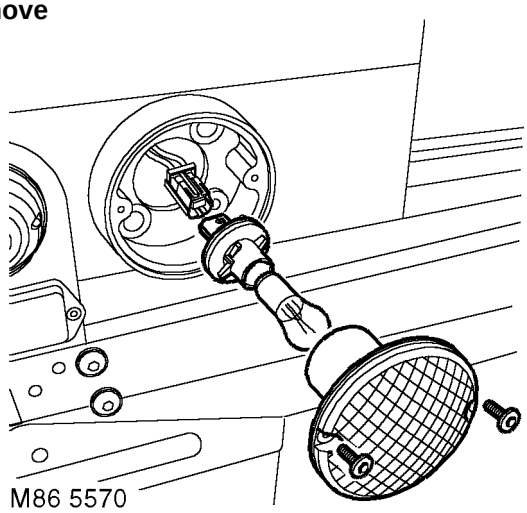

1. Remove 2 screws securing lamp to housing and withdraw. Disconnect bayonet bulb holder from lamp housing.
2. Remove bulb.

Refit

3. Clean bulb and holder.
4. Fit new bulb to holder.
5. Fit bulb holder to lamp.
6. Position lamp, fit and tighten screws.

LAMP ASSEMBLY - CENTRE HIGH MOUNTED STOP LIGHT (CHMSL) - FROM 02MY

Service repair no - 86.41.32

Remove

1. Open rear door.

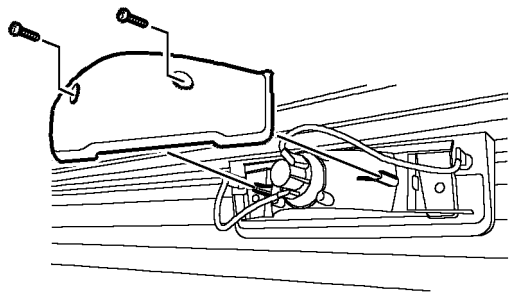

M86 5536

2. Remove 2 screws and cover from CHMSL.

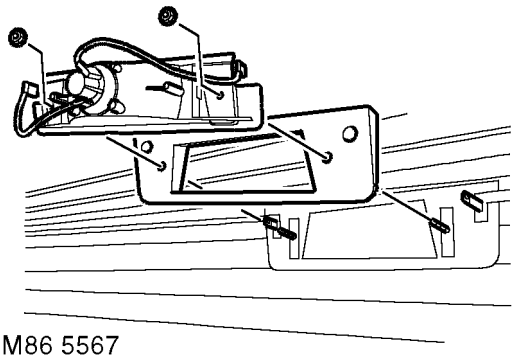

M86 5567

3. Remove insulated cover from Lucar connector, release catch's and disconnect Lucar's taking care not to damage screen element.
4. Remove nuts securing lamp to rear screen, withdraw lamp assembly, collect seals and washers.
5. Remove rubber backing pad, taking care not to damage screen obscuration band.

Refit

6. Clean obscuration band and fit new backing pad.
7. Fit lamp assembly, seals and washers. Fit nuts and tighten to ***3 Nm (2.2 lbf.ft)*** .
8. Insulate Lucar connector.
9. Connect Lucars to heated rear screen.
10. Fit cover to CHMSL and secure with screws.

FLASHER UNIT - HAZARD WARNING - FROM 02MY

Service repair no - 86.55.12
Service repair no - 86.55.15

NOTE: This procedure also covers removal of the Heated Front Screen Timer Relay, 86.55.15.

Remove

1. Disconnect battery negative lead. ***See this Section.***

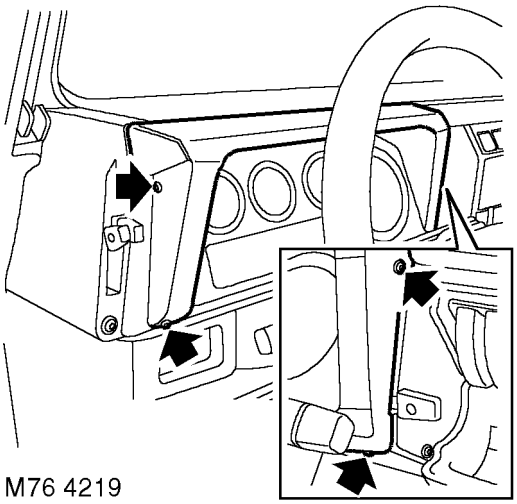

M76 4219

2. Remove 4 screws securing instrument pack and release pack from fascia.

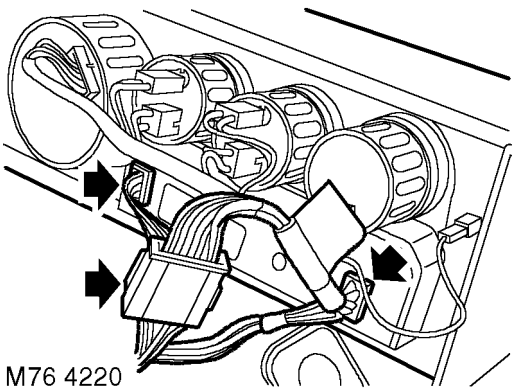

M76 4220

3. Disconnect 2 multiplugs from warning lamp panel.
4. Disconnect instrument pack multiplug from main harness.
5. Remove instrument pack.

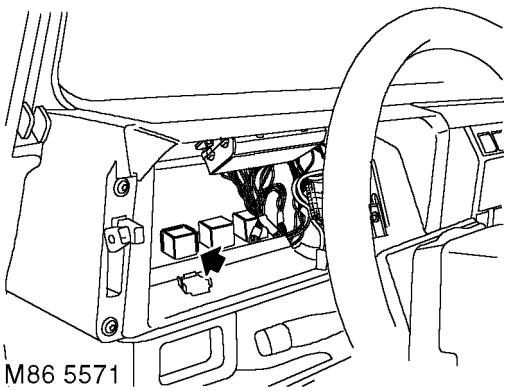

6. Identify and remove relay.

NOTE: Flasher unit shown.

Refit

7. Fit relay.
8. Position instrument pack and connect multiplugs.
9. Fit instrument pack to fascia and secure with screws.
10. Connect battery negative lead. ***See this Section.***

RELAY - HEATED FRONT SCREEN - FROM 02MY

Service repair no - 86.55.18

Remove

1. Remove front seat cushion.
2. Release clip and remove compartment cover.

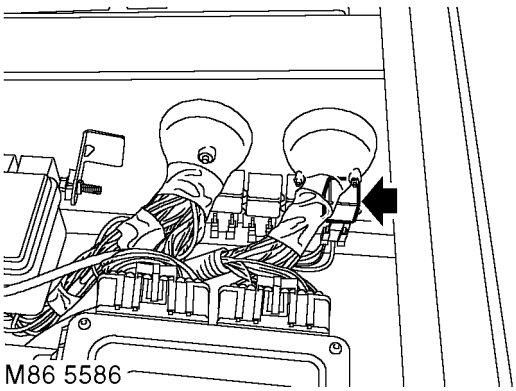

3. Locate and release relay from bracket.
4. Remove relay.

Refit

5. Fit relay.
6. Fit relay to mounting bracket.
7. Fit and secure cover.
8. Fit seat cushion.

RELAY - REAR FOG GUARD - FROM 02MY

Service repair no - 86.55.53

Remove

1. Disconnect battery negative lead. ***See this Section.***

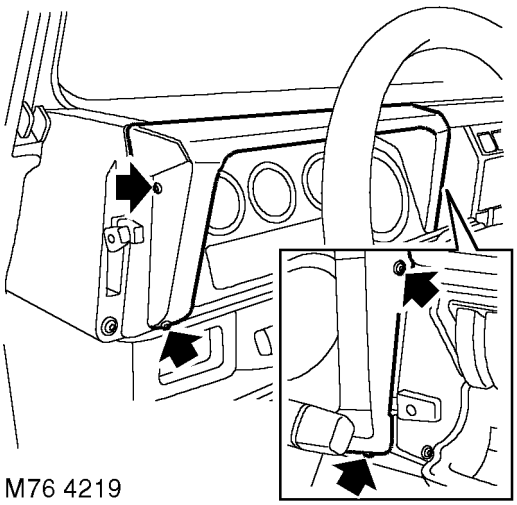

2. Remove 4 screws securing instrument pack and release pack from fascia.

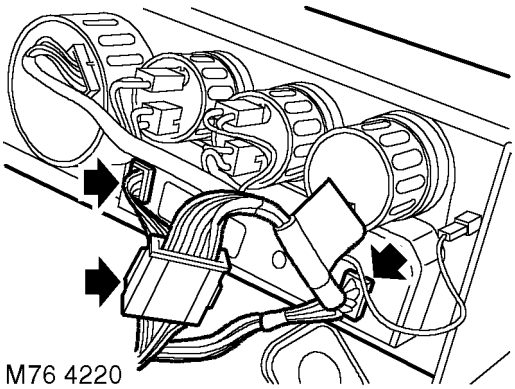

3. Disconnect 2 multiplugs from warning lamp panel.
4. Disconnect instrument pack multiplug from main harness.
5. Remove instrument pack.

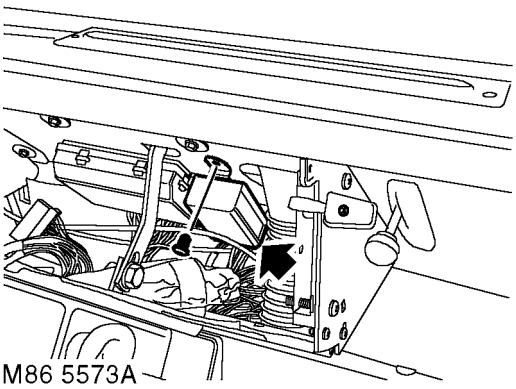

6. Remove screw securing relay bracket, disconnect multiplug and remove relay.

Refit

7. Fit relay, connect multiplug and secure relay with screw.
8. Position instrument pack and connect multiplugs.
9. Fit instrument pack to fascia and secure with screws.
10. Connect battery negative lead. ***See this Section.***

RELAY - STARTER - FROM 02MY

Service repair no - 86.60.10

Remove

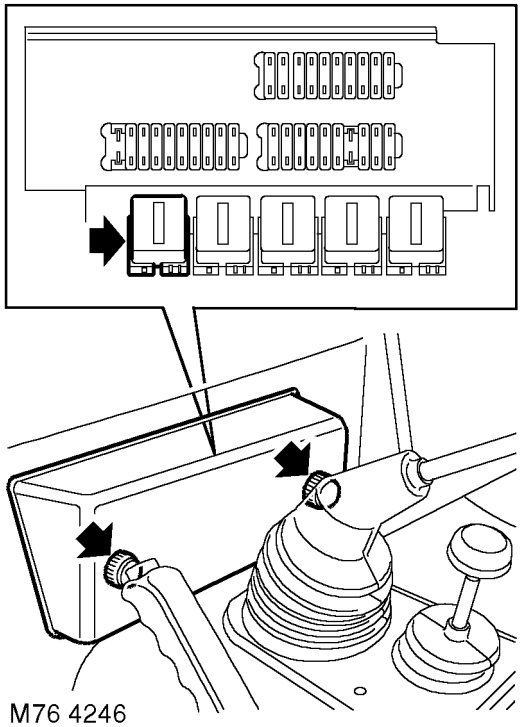

1. Remove 2 screws securing fuse cover and remove cover.
2. Identify and remove relay.

Refit

3. Fit relay.
4. Fit fuse cover and secure with screws.

SWITCH - HEADLAMP LEVELLING - FROM 02MY

Service repair no - 86.65.16

Remove

1. Disconnect battery negative lead. ***See this Section.***
2. Remove fascia console. ***See CHASSIS AND BODY, Repair.***

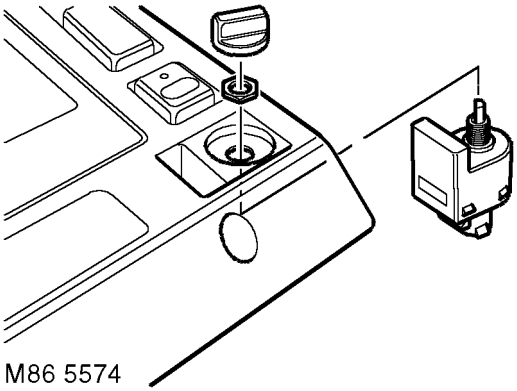

3. Remove operating knob from light switch.
4. Remove nut securing light switch and remove switch from console.

Refit

5. Fit light switch and secure with nut.
6. Fit operating knob to switch.
7. Fit fascia console. ***See CHASSIS AND BODY, Repair.***
8. Connect battery negative lead. ***See this Section.***

CIGAR LIGHTER - FRONT - FROM 02MY

Service repair no - 86.65.60

Remove

1. Disconnect battery negative lead. ***See this Section.***
2. Remove fascia console. ***See CHASSIS AND BODY, Repair.***

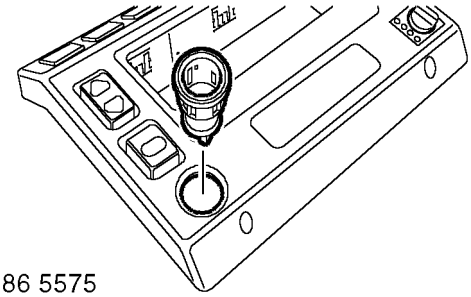

M86 5575

3. Release cigar lighter body and remove from console.

Refit

4. Fit and secure cigar lighter body to console.
5. Fit fascia console. ***See CHASSIS AND BODY, Repair.***
6. Connect battery negative lead. ***See this Section.***

88 - INSTRUMENTS

CONTENTS

Page

DESCRIPTION AND OPERATION

FASCIA CONSOLE 2

REPAIR

INSTRUMENT PACK 1
CLOCK 2

This page is intentionally left blank

FASCIA CONSOLE

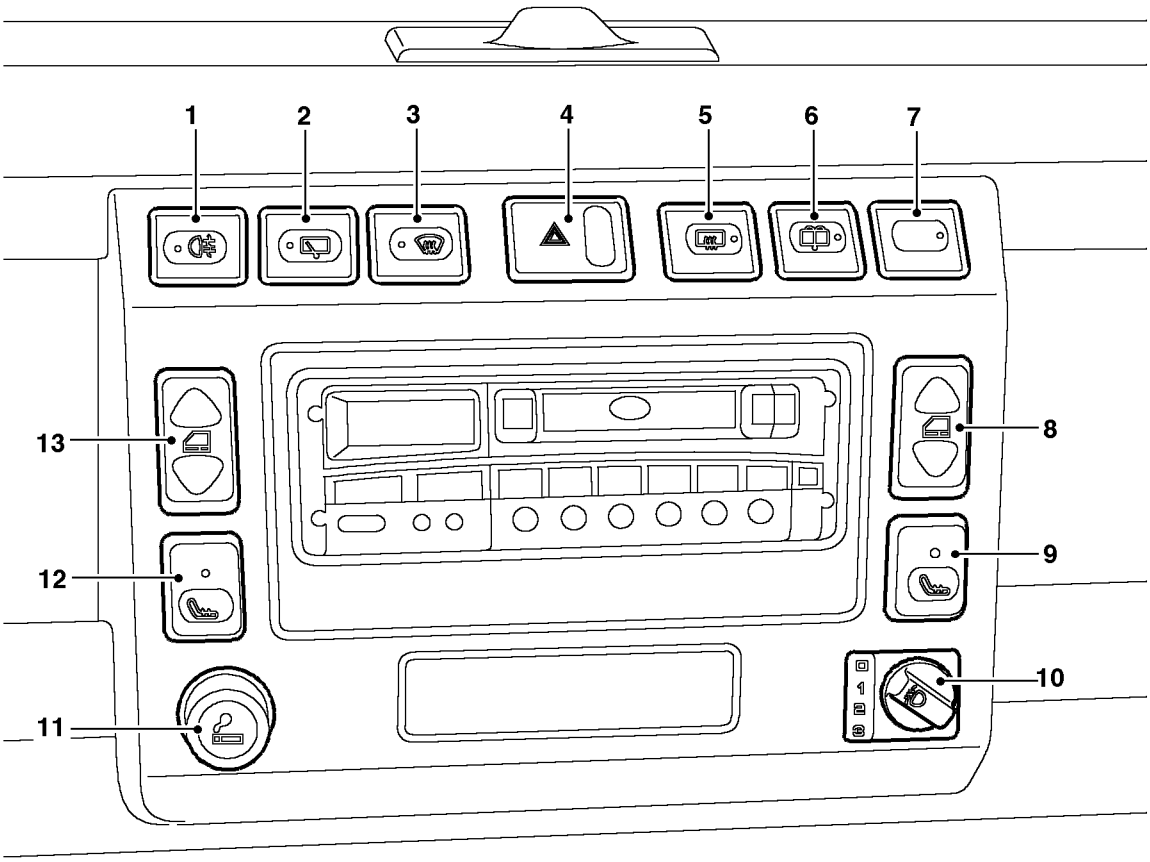

M86 5561A

1. Rear fog lamp switch
2. Rear wiper switch
3. Heated front screen switch (if fitted)
4. Hazard warning lamp switch
5. Heated rear window switch
6. Rear washer switch
7. Front fog lamps switch (if fitted)
8. RH front window switch
9. RH heated front seat switch (if fitted)
10. Headlamp levelling control switch
11. Cigar lighter (if fitted)
12. LH heated front seat switch (if fitted)
13. LH front window switch

For 02MY a new fascia console has been introduced to accommodate the additional switches for electric windows etc.

The console comprises a plastic moulding secured to the fascia with five screws. The new console allows existing switches to be repositioned and has provided the opportunity to commonise the switches with other Land Rover models. The switches and components located in the console are as follows:

- Cigar lighter (if fitted)
- Headlamp levelling control
- LH and RH heated front seat switches (if fitted)
- LH and RH front window lift switches
- Front fog lamp switch (if fitted)
- Rear fog lamp switch
- Rear wash/wipe switch
- Rear wiper switch
- Hazard warning lamp switch
- Heated rear window switch
- Heated front screen switch (if fitted)

A central cut-out in the console provides for the installation of the radio, where fitted, or a coin tray for markets without a standard radio installation.

INSTRUMENT PACK

Service repair no - 88.30.38

Remove

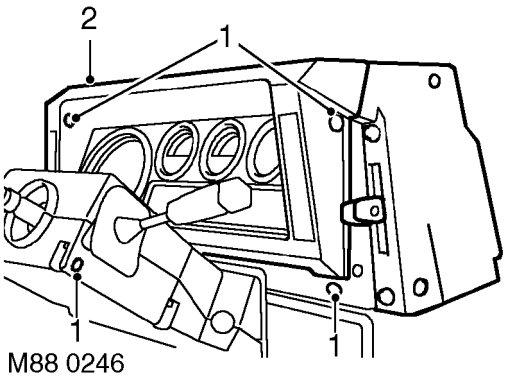

1. Remove 4 screws securing instrument pack to fascia.
2. Release instrument pack from fascia.

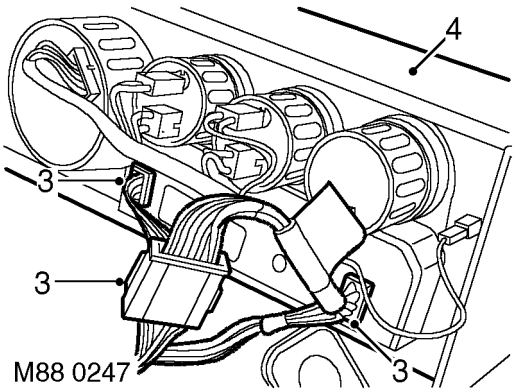

3. Disconnect 3 instrument pack harness to main harness multiplugs.
4. Remove instrument pack.

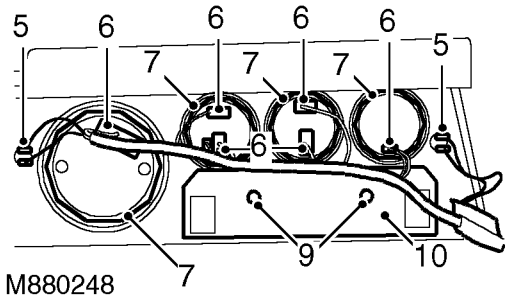

5. Disconnect 4 Lucars from left and right hand heater controls.
6. Disconnect 7 multiplugs from rear of instrument pack.
7. Remove clamping rings from 4 gauges.
8. Remove 4 gauges from instrument pack.
9. Remove 2 Torx screws securing warning lamp assembly to instrument pack.
10. Remove warning lamp assembly from instrument pack.

Refit

11. Fit warning lamp assembly to instrument pack and secure with Torx screws.
12. Fit gauges to instrument pack and secure with clamping rings.
13. Connect multiplugs to rear of instrument pack.
14. Connect Lucars to left and right hand heater controls.
15. Position instrument pack to fascia and connect instrument pack harness to main harness multiplugs.
16. Fit instrument pack to fascia and secure with screws.

CLOCK

Service repair no - 88.15.07

Remove

1. Remove instrument pack. ***See this Section.***

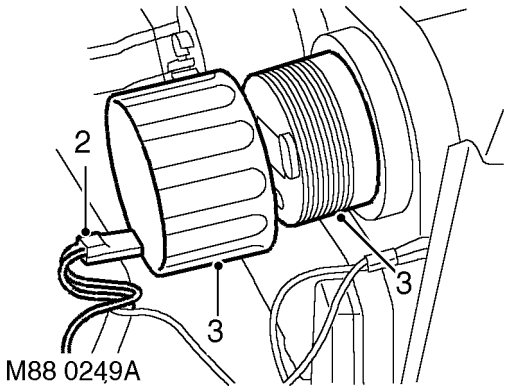

2. Disconnect multiplug from clock.
3. Remove threaded clamping ring securing clock and remove clock.

Refit

4. Position clock and secure to instrument pack.
5. Connect multiplug to clock.
6. Fit instrument pack. ***See this Section.***