ISUZU
ISUZU D-MAX
ALL-NEW ISUZU D-MAX
GO YOUR OWN WAY

THE FUTURE OF TOUGH

4x4 D-MAX X-TERRAIN in Volcanic Amber metallic

Powered by its legendary 3-litre turbo diesel engine, the All-New Isuzu D-MAX takes you to the next level of performance and reliability.

Welcome to the new generation of tough. From cutting-edge technology to the power you need, the All-New D-MAX is more capable than ever before. Designed to handle the harshest of Australian conditions, it has everything you require to own your next adventure in style and comfort. Whether on or off-road, at work or at play, the D-MAX defines durability – today, and every day after.

Everything Isuzu has learned over a century of specialist engineering has led to this. The rugged, reliable, and refined Isuzu D-MAX. GO YOUR OWN WAY.

4x4 D-MAX X-TERRAIN in Volcanic Amber metallic (front) &
4x4 D-MAX X-TERRAIN in Mercury Silver metallic (rear)

Muscular and modern, the Isuzu D-MAX commands attention at every turn.

The All-New Isuzu D-MAX combines signature toughness with sleek urban charisma. Whether you're on a worksite, navigating the city or ruling off-road, it's bigger, bolder and even more decisive.

The D-MAX lights the way with LED Daytime Running Lights (DRLs) and ultra-bright Bi-LED headlights standard on the LS and the top of the range X-TERRAIN. Taking style to another level, the X-TERRAIN features dark grey highlights and exclusive features such as an aero sports bar, fender flares and a lockable roller tonneau. And to make the ultimate statement, the X-TERRAIN is offered in Volcanic Amber – an exclusive metallic paint finish that's as confident as it is eye-catching. With its dominant stance and imposing presence, this is the supreme evolution of Isuzu's celebrated truck spirit.

A Bi-LED HEADLIGHTS: Bi-LEDs illuminate further and wider. Standard on LS and X-TERRAIN models.

B FRONT GRILLE: With an unmistakably Isuzu attitude, the D-MAX grille is both rugged and stylish. The dark grey grille shown is standard on X-TERRAIN only.

C LED Taillights: Ultra-bright LED taillights are standard on LS-U and X-TERRAIN D-MAX models.

D ALLOY WHEELS: Standard on X-TERRAIN models, dark grey 18" alloys feature a distinctive, darkened finish.

*Seats have leather touches or accents, but are not wholly leather.

4x4 D-MAX X-TERRAIN interior with accented leather seats*

Effortless space. Intuitive design. Complete comfort.

Your Isuzu D-MAX is more than just a ute to get from A to B. It's your mobile office, your place to relax, and your passport to adventure. Whatever your purpose, the D-MAX's interior has been carefully crafted to suit your needs.

The first thing you'll notice is the D-MAX's stylish, richly appointed and technologically advanced cabin. It's never been simpler to find the perfect driver's position, with a redesigned, ergonomically optimised driver's seat, and tilt and telescopic adjustment of the steering wheel. With electric power steering, every corner of every drive will feel better than ever before. The top of the range D-MAX X-TERRAIN adds an extra layer of luxury with leather accented seats* as standard, as well as an eight-way adjustable electric driver's seat with built-in powered lumbar support.

Your passengers win, too. All occupants enjoy softer cushioning with firmer lateral support, ample space and abundant storage. Reduced vibration and cabin noise make each journey a pleasure. LS-U and X-TERRAIN models feature dual zone climate control, while a fine-particle pollen filter and rear-seat air vents feature on all crew cab models.

A ELECTRIC ADJUSTABLE DRIVER'S SEAT: Standard on the X-TERRAIN, an eight-way electrically adjustable driver's seat also offers customisable powered lumbar support. Powered lumbar support is also standard on the LS-U.

B REAR SEATS: 30/70 split fold rear seats standard on all crew cabs.

C DUAL ZONE AIR CONDITIONING: Standard on LS-U and X-TERRAIN, both driver and passenger can select their own temperature preference.

D TILT & TELESCOPIC STEERING WHEEL: All models feature a height and reach-adjustable steering wheel for improved comfort and control.

*Seats have leather touches or accents, but are not wholly leather.

THE COMMAND CENTRE

*Seats have leather touches or accents, but are not wholly leather.

4x4 D-MAX X-TERRAIN interior with accented leather seats*

The All-New Isuzu D-MAX features an array of advanced technology – all tailored to make your life easier.

The Isuzu D-MAX delivers all the technological convenience and functionality you've come to expect – and more.

Every D-MAX features a large, high-definition, customisable central touchscreen, with DAB+ digital radio, Android Auto™ and wireless Apple CarPlay®, as well as voice recognition. A large 4.2" digital display lets the driver access a variety of information in the instrument cluster via the steering wheel, including a digital speed reading. LS-U and X-TERRAIN models feature built-in satellite navigation as standard, while up to eight surround-sound in-cabin speakers put you in the front row of the concert on every journey.

An array of technology brings you closer to your car. Remote keyless entry features in every model, with the top of the range X-TERRAIN including smart keyless entry. Remote engine start can pre-cool your ute in summer or warm it in colder months, while push button start minimises fuss. All D-MAXs offer automatic wipers, automatic headlights and all automatic models feature adaptive cruise control as standard.

A REMOTE ENGINE START: The engine can be activated prior to entry with the push of a button. On X-TERRAIN only.

B SMART TOUCHSCREEN DISPLAYS: AppleCarPlay®/Android Auto™ and voice recognition is standard across the D-MAX range.

C SMART MID: Digital smart Multi-Information Display (MID) is standard across the range providing information on a variety of vehicle features.

D REVERSING CAMERA: Every D-MAX comes with a reversing camera and Rear Cross Traffic Alert (RCTA) as standard.

Apple CarPlay is a trademark of Apple Inc. Android Auto is a trademark of Google LLC. Not all devices will be compatible & functionality will vary depending on the device. Mobile Data & SMS rates may apply & are the responsibility of the user. Please check your local road rules before using these functions.
*Seats have leather touches or accents, but are not wholly leather.

THE SMARTEST SAFEST CHOICE

IDAS
INTELLIGENT DRIVER ASSISTANCE SYSTEM

Cutting-edge and personalised driver assistance systems designed to protect and enhance your driving experience.

Isuzu's Intelligent Driver Assistance System (IDAS#), which covers an extensive list of both active and passive safety features, is standard across every D-MAX model. Using state-of-the-art sensors and a stereo camera system, the D-MAX constantly monitors your surrounding environment for danger. Should it detect a collision is imminent, the system will work to help the driver to defuse dangerous situations via alert systems and automated functions. Each D-MAX model includes eight airbags as standard, and a stronger, more robust body and chassis as well as a reinforced cabin safety cell for ultimate protection in the case of an accident. You're in the safest of hands, wherever the journey takes you – even when you leave the road behind.

4x4 D-MAX X-TERRAIN in Cobalt Blue mica

#IDAS features are designed to assist the driver, but should not be relied upon nor used as a substitute for safe driving practices.
Feature operation may vary in different driving conditions. For full explanation of limitations, see Owner's & Driver's Manual.

AUTONOMOUS EMERGENCY BRAKING (AEB): If your D-MAX detects a potential collision, emergency braking is applied automatically.

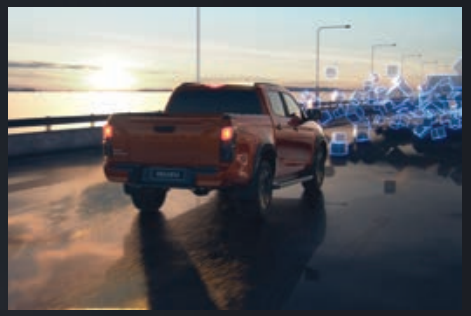

FORWARD COLLISION WARNING (FCW): An audible warning sounds and red warning lights flash on the dashboard when an obstacle is detected in your path.

ADAPTIVE CRUISE CONTROL: Automatically adjusts your speed based on vehicles around you when cruise-control is activated. (Automatic Transmission only).

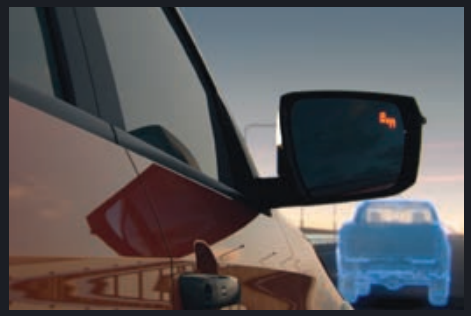

BLIND SPOT MONITOR (BSM): Provides a visual warning in your side mirrors when an obstacle is approaching in your blind spot.

LANE KEEPING: Lane Keep Assist (LKA), Emergency Lane Keeping (ELK) and Lane Departure Prevention (LDP) work to help prevent collisions with other drivers should your D-MAX begin to drift across its lane.

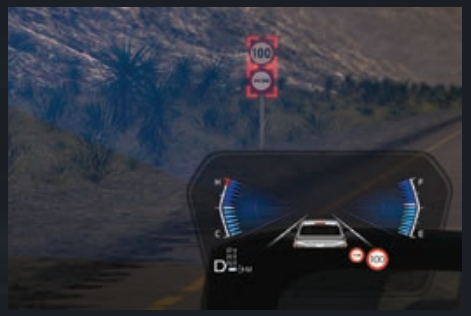

TRAFFIC SIGN RECOGNITION: Your D-MAX recognises traffic signs, displaying information such as speed limits in the MID for easy reference.

FRONT & REAR PARKING SENSORS: Provides instantaneous feedback regarding nearby obstacles at low speed on X-TERRAIN models only. (LS-U models have rear sensors only as standard).

REVERSING CAMERA WITH REAR CROSS TRAFFIC ALERT (RCTA): Monitors your surrounding area while reversing into traffic, providing visual and audible warnings should an object approach from the left or right.

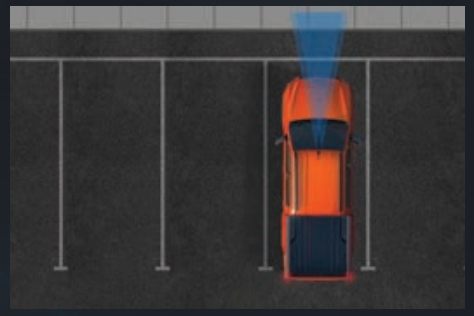

MISACCELERATION MITIGATION: In slow moving areas such as car parks, the stereo cameras determine whether the accelerator has been applied accidentally. Should a potential collision be detected, the brakes are automatically applied. (Automatic Transmission only).

AUTOMATIC HEADLIGHTS & HIGH BEAMS: Headlights automatically turn on when it is dark, such as at dusk or in underground car parks. During travel, the D-MAX dims the high beams automatically to avoid dazzling other drivers.

AUTOMATIC WINDSHIELD WIPERS: Every D-MAX has built-in rain-sensing wipers, ensuring you never lose sight of the road or trail ahead.

EIGHT AIRBAGS: For ultimate protection, every D-MAX comes with eight airbags including a centre airbag to protect front seat occupants in side-on collisions.

Safety feature imagery is for illustrative purposes only.

THE MUSCLE UNDER THE HOOD

4x4 D-MAX LS-U in Mercury Silver metallic

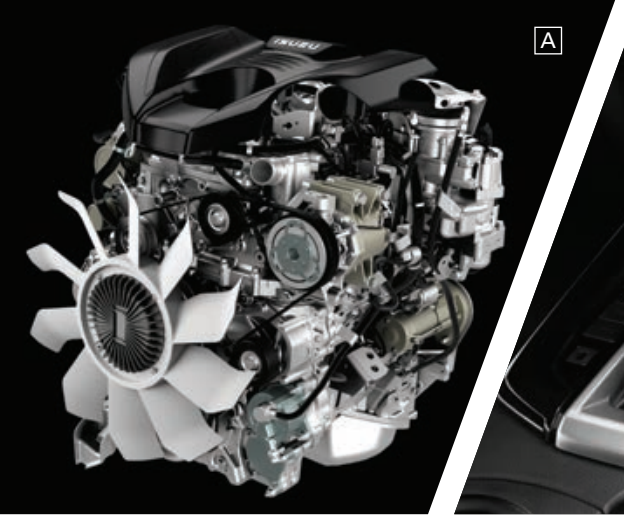

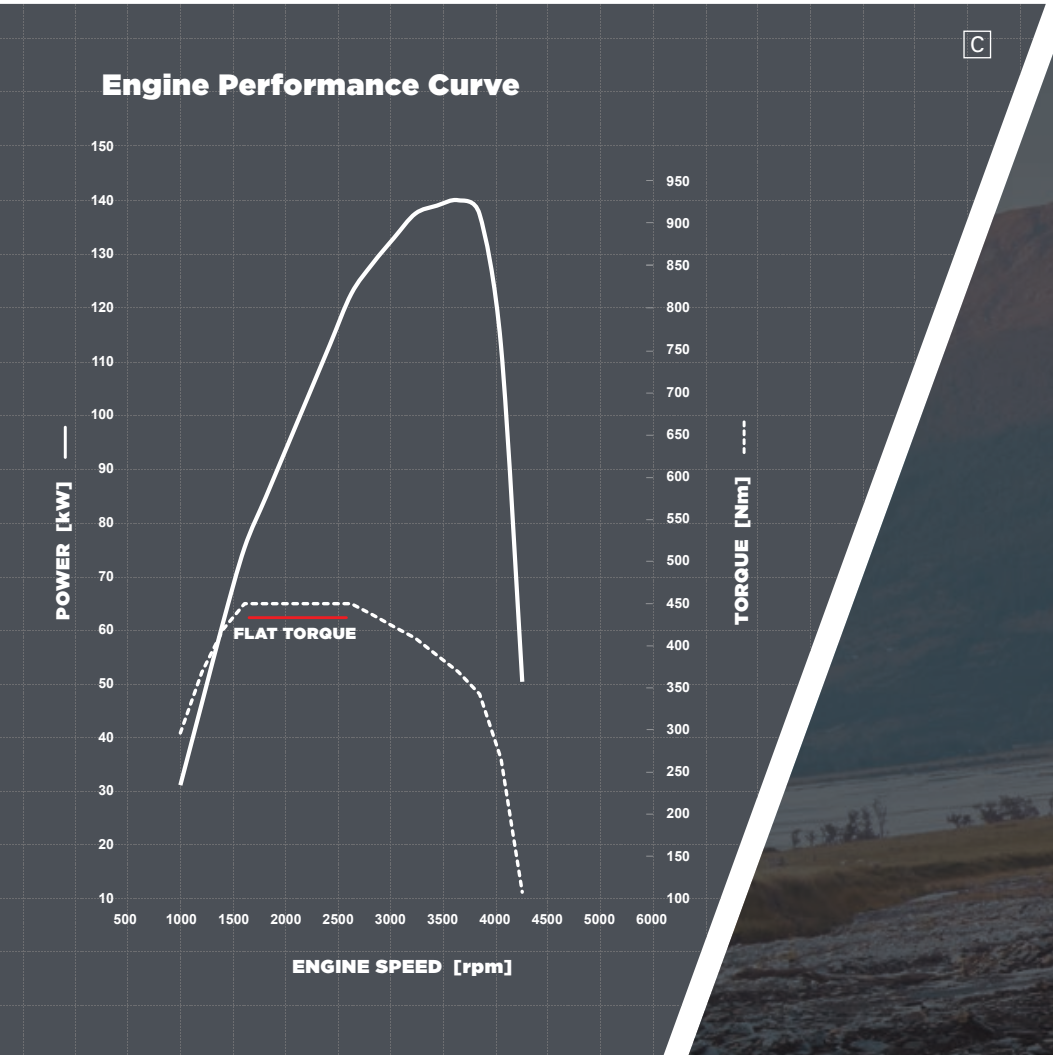

Go your own way with 140kW of power and 450Nm of torque.

Its advanced 3-litre turbo diesel common rail engine produces an avalanche of torque on demand. All 450Nm is available from just 1600rpm, providing maximum take-off and acceleration, while a broad, flat torque band aids driveability. With precise fuel injection control and low engine noise, improved aerodynamics and all the power you need, the D-MAX is more capable than ever before. Being Euro5 compliant, the D-MAX also delivers efficient fuel economy across the range.

Mated to a choice of manual or automatic six-speed transmissions – the new D-MAX demonstrates sophistication across its drivetrain. 6-speed manual transmissions benefit from a new dual mass flywheel, which absorbs vibrations and torque pulses from the engine for smoother and more efficient drivability and transmission longevity. The 'Rev-Tronic' automatic transmission with sequential sports mode, automatically selecting the most appropriate shift and lock-up points according to driving style, vehicle load and road speed. Meanwhile, the short-throw gear lever in the manual D-MAX now boasts a superior pivot point – allowing for sportier, more palpable driving engagement.

Whether it's powering through the work week, crushing the weekend or going where the others won't, the Isuzu D-MAX is the complete performer.

A ISUZU 3.0L ENGINE: The advanced 4JJ3-TCX with plenty of real world power (140kW) and torque (450Nm).

B 6-SPEED TRANSMISSION: The D-MAX features 6-speed automatic and manual transmission options across the range.

C ENGINE PERFORMANCE CURVE: A flat torque curve delivers 450Nm of torque from 1600rpm to 2600rpm.

4x4 D-MAX X-TERRAIN in Magnetic Red mica

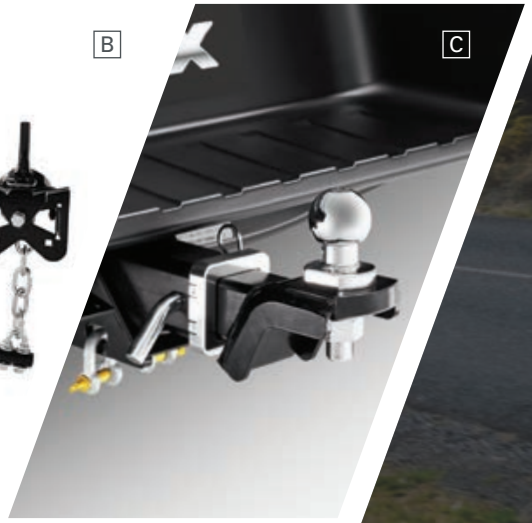

Strong, stable and always willing, the All-New Isuzu D-MAX meets every challenge with 3.5-tonne towing*.

Your search for the perfect travelling companion is over. Isuzu's legendary 3-litre turbo diesel engine delivers high torque across the range, making light work of a caravan, boat, or trailer. When fitted with a genuine Isuzu UTE tow bar kit, every D-MAX is able to tow up to 3.5 tonnes, while electric power steering ensures easy touring, no matter how long the journey – or how rough the conditions. Included across the range, Trailer Sway Control (TSC) can assist in bringing the towed vehicle back under control in high winds or uneven surfaces. Should it detect sway, TSC will attempt to assist by automatically applying the brakes on individual vehicle wheels, helping to stop your trailer from stepping out of line - and keeping you on the road. Serene and worry free.

Wider and stronger than ever, the new D-MAX underwent the equivalent of over four million kilometres of testing during research and development – both on and off-road – and it shows. It emerged as the toughest ute in Isuzu's history, with an incredibly durable chassis and suspension tuned for Australian conditions. And you can further adapt your D-MAX, with an electronic brake controller kit and weight distribution hitch for ultimate control over your load.

A TRAILER SWAY CONTROL (TSC): Will apply brakes to individual vehicle wheels to help bring the trailer safely back under control.

B OPTIONAL GENUINE WEIGHT DISTRIBUTION HITCH: Ease the burden on the rear of your D-MAX by spreading the load evenly across the chassis with a genuine weight distribution hitch accessory.

C OPTIONAL GENUINE TOW BAR KIT: Tow up to 3.5 tonnes with the genuine Isuzu tow bar kit accessory. Available with optional 7-pin or 12-pin wiring harnesses.

D OPTIONAL ELECTRONIC BRAKE CONTROLLER: Maintain precise control of your heavy caravan or trailer's brakes from the comfort of the driver's seat.

*Braked towing on all D-MAX models when fitted with an optional genuine Isuzu D-MAX tow bar kit.

THE ROAD LESS TRAVELLED

4x4 D-MAX X-TERRAIN in Volcanic Amber metallic

Designed from the ground up to handle Australia's toughest terrain, the All-New Isuzu D-MAX comes alive off-road.

Wherever you're planning to go, your D-MAX is up for the task. With extensive steel underbody protection, an increased wading depth+ of 800mm, and with a rear axle differential lock as standard on all 4x4 models, the D-MAX is your most reliable way to escape the everyday.

Engineered for Australian conditions, every 4x4 D-MAX features 'Terrain Command' as standard, allowing you to switch between 2WD-high and 4WD-high modes at speeds of up to 100km/h in less than a second. When the going gets tough, selecting 4WD-low will provide increased traction and complete control. Hill Start Assist (HSA) automatically prevents roll-back when starting on steep gradients (above 5.7 degrees), while Hill Descent Control (HDC) gives you maximum traction on rough downhill terrain. Add a turning circle of just 12.5 metres – meaning maximum manoeuvrability in tight spaces – and the D-MAX is supremely confident. Whatever the conditions. Wherever the location.

A STEEL UNDERBODY PROTECTION: Steel underbody guards on sump and transfer case on 4x4 models.

B 800MM WADING DEPTH: Water crossings are simple with an increased wading depth+ of 800mm on all D-MAX models.

C REAR DIFFERENTIAL LOCK: Standard on all 4x4 models, the rear differential lock can be engaged with the push of a button when in 4WD-low.

D TERRAIN COMMAND DIAL: Switch quickly and easily between 2WD-high, 4WD-high and 4WD-low driving modes.

+Up to 800mm of wading depth on all D-MAX models when travelling at a consistent speed of 7km/h. Water ingress may occur if speed is not maintained or if the vehicle is static in water above 350mm.

THE TOUGH ISUZU DNA

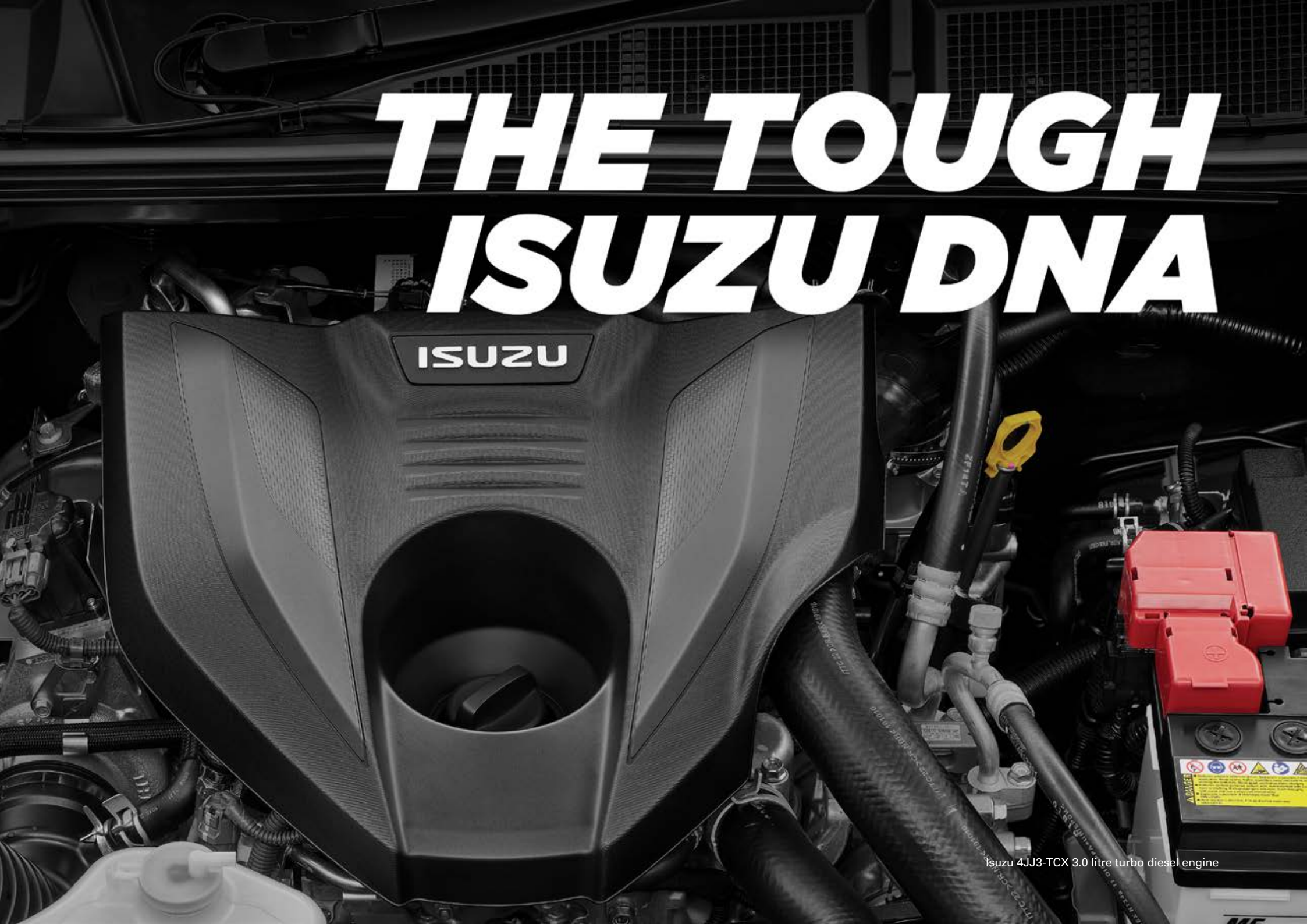

Isuzu 4JJ3-TCX 3.0 litre turbo diesel engine

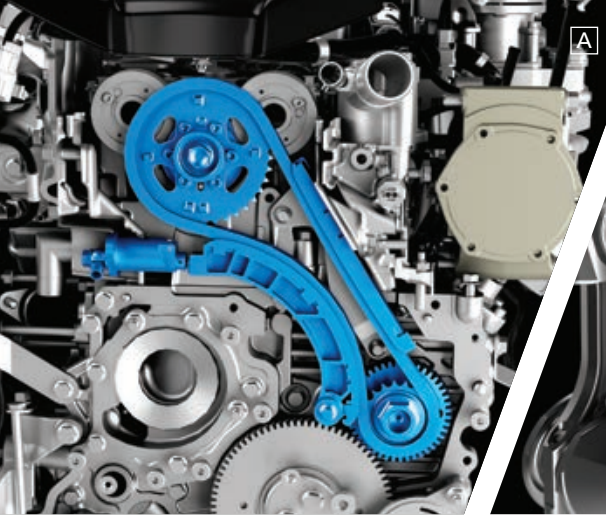

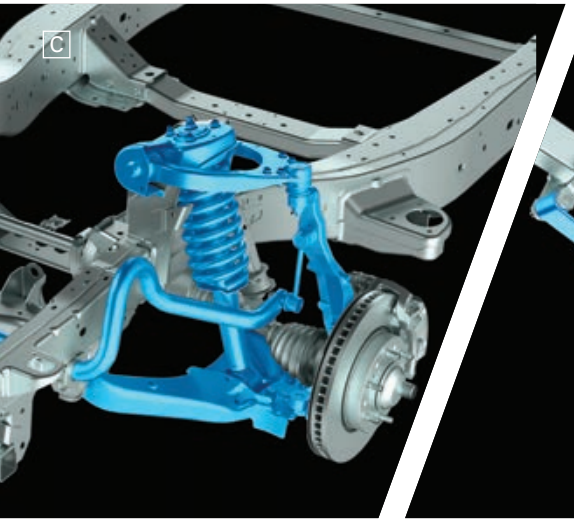

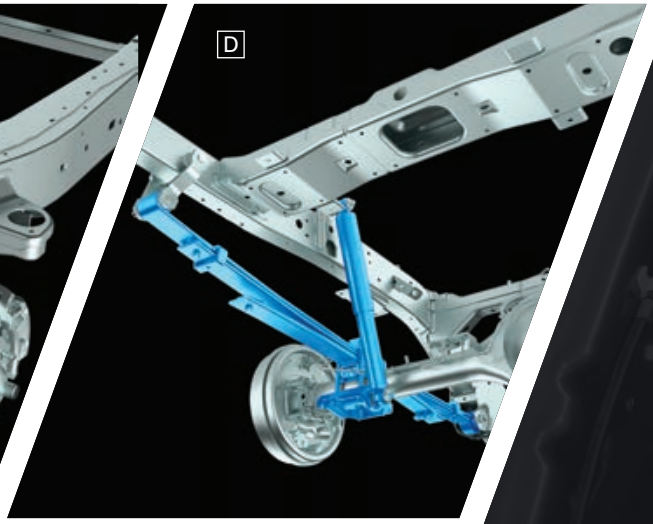

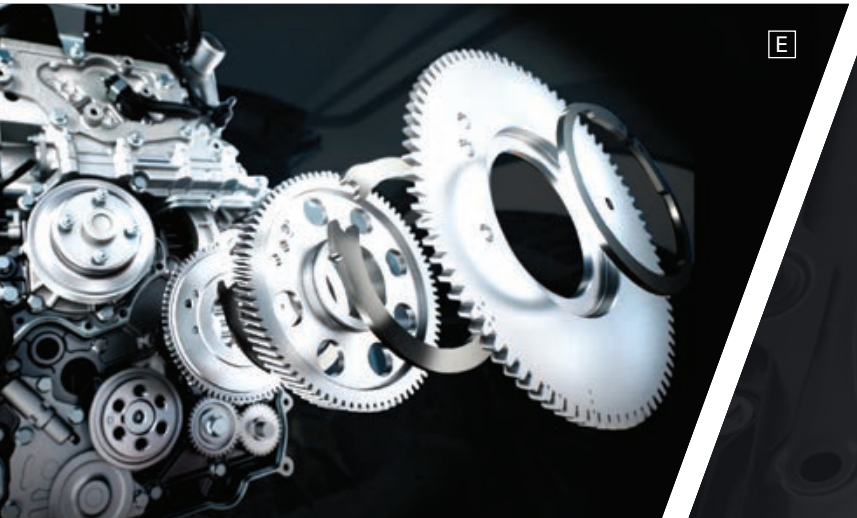

After a century of building the world's most reliable workhorses, the All-New Isuzu D-MAX is Isuzu's toughest ute – ever.

Having built more than 26 million engines internationally, Isuzu is the world leader in diesel engineering. Made to go the distance, the D-MAX has a legendary reputation for reliability. Over generations of commercial vehicle manufacturing, Isuzu has proven itself across Australia – and around the world.

The D-MAX's chassis is constructed with ultra-high tensile steel with extra cross members for added durability. Warm Stress Shot Peening (WSSP) long-span rear suspension is both stronger and more flexible, while independent double-wishbone front suspension with higher upper control arms improve handling for a more comfortable ride. The improved lightweight body provides improved overall stability, greater occupant protection, as well as reduced noise and vibration throughout the cabin.

A STEEL TIMING CHAIN: The steel timing chain found in the Isuzu engine is sturdier and lasts longer than a standard poly belt.

B PISTONS: Piston crowns and pins are coated with a special diamond-like carbon that improves durability and heat resistance, helping the engine work smoothly at maximum power.

C FRONT SUSPENSION: Higher mounted control arms minimise body roll when cornering and improve tyre grounding.

D REAR LEAF SUSPENSION: A lighter, but stronger leaf designed for Australian conditions creates a smoother ride.

E DOUBLE SCISSOR GEARS: A double scissor idler gear design results in reduced engine and gear noise for quieter and smoother operation.

Engine component imagery is for illustrative purposes only & actual appearance may differ.

THE HARDEST WORKER

4x4 D-MAX SX Single Cab Chassis in Mercury Silver metallic
with optional Heavy Duty Alloy Tray & Tow Bar Kit

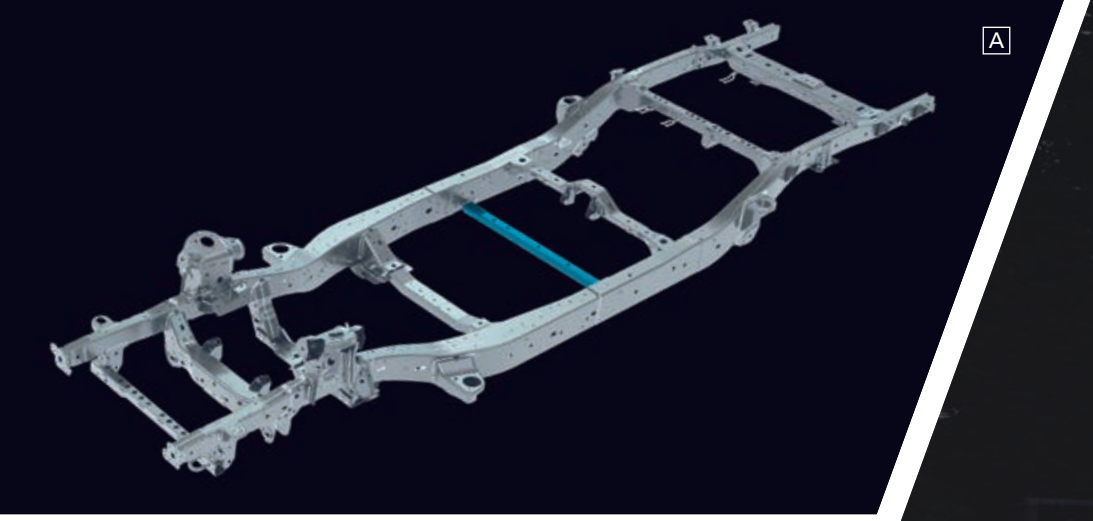

The Isuzu D-MAX works as hard as you do to get the job done anywhere, anytime.

No fuss. No short cuts. No excuses. The D-MAX is built to work. Whether you're on the land, on a building site or anywhere in between, the D-MAX's superior ladder frame chassis design provides total confidence. Stronger and wider, its rigidity is increased by an incredible 20 percent over its predecessor, thanks to larger chassis side rails and an added cross member. Delivering improved stability when loaded or towing, it ensures long-term durability and sure-footed performance.

Loading up cargo in the cabin is made simple with D-MAX's ingenious Space Cab. Featuring rear 'wing' doors to make cabin access easier and a redesigned single piece B Pillar for improved body rigidity, the Space Cab is a workers' best mate. And for even greater versatility, your D-MAX can be matched with a genuine Isuzu D-MAX tray body, with a range of alloy or steel trays and accessories available to suit you.

All SX and LS-M models come with tough 17-inch all-terrain tyres as standard. They make light work of even the roughest ground while offering a smooth ride on tarmac – and low road noise. With Android Auto™ and wireless Apple CarPlay® across the range, you'll always be connected to the rest of the world.

A LADDER CHASSIS: The D-MAX's superior ladder chassis is 20 percent stronger, wider and has an added cross member for improved rigidity.

B SPACE CAB DESIGN: Ample storage behind the front seats can be easily accessed via rear 'wing' doors.

C SX GRADE INTERIOR CABIN: SX interior with 7" touchscreen featuring Android Auto™ and wireless Apple CarPlay®.

Apple CarPlay is a trademark of Apple Inc. Android Auto is a trademark of Google LLC. Not all devices will be compatible & functionality will vary depending on the device. Mobile Data & SMS rates may apply & are the responsibility of the user. Please check your local road rules before using these functions.

THE PERFECT FLEET

4x4 D-MAX SX Single Cab Chassis in Mercury Silver metallic with optional Heavy Duty Alloy Tray, 4x4 D-MAX LS-M Crew Cab Ute in Mercury Silver metallic & 4x2 D-MAX SX Space Cab Ute in Obsidian Grey mica

With 20 variants available, there's always an Isuzu D-MAX to suit your needs.

Precision engineered for durability and economy – and with a time-proven reputation for reliability – the D-MAX is the ultimate workhorse. And with a choice of 20 variants, the only decision is which D-MAX best meets your requirements. Whether your people need to go the distance on highways, into the outback or simply from site to site, the D-MAX range has been engineered for valuable cost savings across your fleet, with fewer trips to the fuel pump and less time off the road.

With the Isuzu Intelligent Driver Assistance System (IDAS) incorporated into every D-MAX, your workforce has never been better protected. Every IDAS safety feature is designed to improve driving practices and maintain driver alertness, as well as protecting pedestrians and other road users. Keeping your employees – and your investments – as safe as possible.

Isuzu UTE's Dealer network of over 150 Dealer locations spans every Australian state and territory, including regional and remote locations, ensuring that support is always close at hand. Our dedicated team of fleet managers are always available to ensure that your fleet requirements are met. Whether you're your own boss or heading up an international corporation, a D-MAX fleet is equipped to suit every aspect of your business.

IDAS features are designed to assist the driver, but should not be relied upon nor used as a substitute for safe driving practices. Feature operation may vary in different driving conditions. For full explanation of limitations, see Owner's & Driver's Manual.

THE ADVENTURE STARTS HERE

4x4 D-MAX LS-M Crew Cab Ute in Mercury Silver metallic &
4x4 D-MAX LS-U Crew Cab Ute in Cobalt Blue mica fitted with
optional Isuzu UTE Genuine Accessories

Go your own way for longer with access to Isuzu UTE Service Plus, the I-Venture Club, and Isuzu UTE Genuine Accessories.

SERVICE PLUS

All D-MAX owners enjoy ultimate peace of mind with Isuzu UTE's comprehensive Service Plus program. As part of this program your D-MAX is covered for six years/150,000km of warranty. While Isuzu's Roadside Assistance Program guarantees support for a minimum of 13 months - and up to seven years in total. Capped price servicing applies for the seven years/105,000km. And with a sprawling network covering all states and territories, your local Isuzu UTE service centre will keep your D-MAX performing at its best – wherever you find yourself.

I-VENTURE CLUB

You won't want to miss the opportunity to properly test your D-MAX's potential – and to visit Australia's most inspiring 4WD locations! The I-Venture Club is an opportunity to build your 4x4 skills and become the off-road champion you've always wanted to be. As an Isuzu UTE owner, you can sign up for exclusive trips that tackle some of the country's most challenging off-road destinations. Learn from our qualified 4x4 instructors, meet like-minded budding adventurers, and come away with the skills to handle the toughest terrain a D-MAX can find. Head to www.iventureclub.com.au for a taste of what's to come.

GENUINE ACCESSORIES

Isuzu UTE Genuine Accessories are the key to taking on more challenging terrain in true 'Go your own way' style. Isuzu UTE's extensive range of accessories allows you to enhance and personalise your ride with precision-engineered parts of the highest quality, with correct fit guaranteed every time. Each genuine accessory comes with a comprehensive warranty[1], providing ultimate peace of mind, and the chance to pack more, do more, or just add a little more style to your D-MAX. See the full range of accessories in the D-MAX Genuine Accessories brochure or at isuzuute.com.au.

SERVICE+LUS | 6 YEAR WARRANTY^ | 7 YEARS ROADSIDE ASSIST< | 7 YEARS CAPPED PRICE SERVICE>

I-VENTURE CLUB

ISUZU GENUINE ACCESSORIES

^6 years/150,000km (whichever occurs first), for Isuzu UTE Vehicles with a Warranty Start Date on or after 1/1/19. Excludes trays & accessories. <The Roadside Assistance Program ("RSA Program") provides Coverage to RSA Eligible Vehicles with a Warranty Start Date on or after 1/9/20 for a maximum of 7 years (unlimited kilometres). Initial 13 months Coverage provided from the Warranty Start Date. The Coverage will be reset for another 13 months from each date that a Participating Isuzu UTE Dealer conducts a Scheduled Service on the vehicle. For full terms & conditions visit isuzuute.com.au/roadside-assistance-disclaimer. >The Capped Price Servicing Program ("CPS Program") applies to CPS Eligible Vehicles at Participating Isuzu UTE Dealers only. For 19MY & later vehicle models, the Capped Price Servicing covers the first 7 Scheduled Services for up to 7 years/105,000km (whichever occurs first). CPS Program is subject to change. For full terms & conditions, current pricing & model eligibility visit isuzuute.com.au/service-plus-disclaimer. [1]Warranty for Isuzu UTE Genuine Accessories fitted by an authorised Isuzu UTE Dealer at the point of sale of a new Isuzu UTE vehicle are covered for three (3) years or 100,000 kilometres, whichever occurs first; Isuzu UTE Genuine Accessories fitted by an authorised Isuzu UTE Dealer after the delivery of a new Isuzu UTE vehicle are covered for one (1) year or 40,000 kilometres from the date of accessory purchase, whichever occurs first; Isuzu UTE Genuine Accessories not fitted by an authorised Isuzu UTE Dealer are warranted from the date of purchase for one (1) year or 20,000 kilometres, whichever occurs first.

D-MAX SX

IDAS
INTELLIGENT DRIVER ASSISTANCE SYSTEM

Cabin Types

Single Cab Chassis
(4x2 & 4x4)

Space Cab Chassis
(4x4 only)

Crew Cab Chassis
(4x2 & 4x4)

Space Cab Ute
(4x2 only)

Crew Cab Ute
(4x2 & 4x4)

Model shown is 4x4 D-MAX SX Single Cab Chassis in Mercury Silver metallic with an optional Heavy Duty Alloy Tray

SX key features

- Tilt & Telescopic Adjustable Steering Wheel
- Electric Power Steering
- Easy-Clean Vinyl Flooring
- 7″ Touchscreen Audio with Android Auto™ & wireless Apple CarPlay® Compatibility
- Reversing Camera
- Black Handles & Mirrors
- 17″ Steel Wheels & 255 65 R17 All-Terrain Tyres
- Matte Grey Grille
- Halogen Headlights

Available colours

Basalt Black mica

Cobalt Blue mica

Mercury Silver metallic

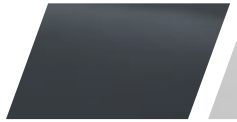

Obsidian Grey mica

Mineral White

D-MAX LS-M

IDAS
INTELLIGENT DRIVER ASSISTANCE SYSTEM

Cabin Type

Crew Cab Ute
(4x4 only)

Model shown is 4x4 D-MAX LS-M Crew Cab Ute in Cobalt Blue mica

LS-M key features

- Tilt & Telescopic Adjustable Steering Wheel
- Electric Power Steering
- Easy-Clean Vinyl Flooring
- High Grade Cloth Seats
- 7″ Touchscreen Audio with Android Auto™ & wireless Apple CarPlay® Compatibility
- Reversing Camera
- Body Colour Handles & Mirrors
- LED Fog Lights
- 17″ Alloy Wheels & 255 65 R17 All-Terrain Tyres
- Matte Grey Grille
- Bi-LED Headlights with Auto Levelling

Available colours

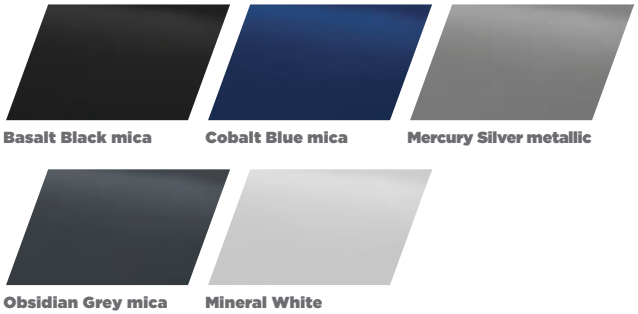

D-MAX LS-U

IDAS
INTELLIGENT DRIVER ASSISTANCE SYSTEM

Cabin Types

Space Cab Ute
(4x4 only)

Crew Cab Ute
(4x2 & 4x4)

Model shown is 4x4 D-MAX LS-U Space Cab Ute in Magnetic Red mica

LS-U key features

- Tilt & Telescopic Adjustable Steering Wheel
- Leather Steering Wheel
- Electric Power Steering
- Carpet Flooring
- High Grade Cloth Seats
- 9" Touchscreen Audio with Android Auto™ & wireless Apple CarPlay® Compatibility
- Reversing Camera with Rear Park Assist Sensors
- 18" Two-Tone Machined Alloy Wheels & 265 60 R18 Highway-Terrain Tyres
- Chrome Grille, Handles & Mirrors
- Bi-LED Headlights with Auto Levelling
- Power Lumbar Support Driver's Seat
- Dual Zone Climate Control Air Conditioning (with rear seat vents in Crew Cab)
- Silver Aluminium Side Steps

Available colours

Basalt Black mica
Cobalt Blue mica
Mercury Silver metallic
Obsidian Grey mica
Mineral White
Marble White pearl
Magnetic Red mica

D-MAX X-TERRAIN

IDAS
INTELLIGENT DRIVER ASSISTANCE SYSTEM

Cabin Type

Crew Cab Ute
(4x4 only)

Model shown is 4x4 D-MAX X-TERRAIN in Volcanic Amber metallic

X-TERRAIN key features

- Smart Keyless Entry & Push Button Start
- Remote Engine Start & Walk Away Door Lock
- Tilt & Telescopic Adjustable Steering Wheel
- Electric Power Steering
- Carpet Flooring with Darkened Interior Finish
- Leather Accented Seats*
- 9" Touchscreen Audio with Android Auto™ & wireless Apple CarPlay® Compatibility
- Front & Rear Park Assist Sensors with Reversing Camera
- 18" Dark Grey Alloy Wheels & 265 60 R18 Highway-Terrain Tyres
- Bi-LED Headlights with Auto Levelling
- Electric Eight-Way Adjustable Driver's Seat with Power Lumbar Support
- Dual Zone Climate Control Air Conditioning (with rear seat vents)
- Dark Grey Grille, Side Steps, Fender Flares & Aero Sports Bar
- Black Roller Tonneau Cover
- Under Rail Tub Liner

Available colours

Basalt Black mica | **Cobalt Blue mica** | **Mercury Silver metallic** | **Obsidian Grey mica**

Mineral White | **Marble White pearl** | **Magnetic Red mica** | **Volcanic Amber metallic**

All features mentioned are a guide for quick comparison. Refer to the D-MAX specification list for further details on available features.Apple CarPlay is a trademark of Apple Inc. Android Auto is a trademark of Google LLC. Not all devices will be compatible & functionality will vary depending on the device. Mobile Data & SMS rates may apply & are the responsibility of the user. Please check your local road rules before using these functions. *Seats have leather touches or accents but are not wholly leather.

SPECIFICATIONS

Engine

Series	Isuzu 4JJ3-TCX
Description	3.0 litre turbo diesel, in-line 4-cylinder, DOHC, 16-valve with Diesel Particulate Diffuser (DPD)
Maximum torque	450Nm @ 1600→2600 rpm (automatic and manual)
Maximum power	140kW @ 3600 rpm
Bore x stroke	95.4mm x 104.9mm
Displacement	2999cc
Compression ratio	16.3 : 1
Cylinder head	Isuzu-patent special aluminium alloy
Valve gear	Chain-driven dual overhead camshafts, roller rockers, 4 valves/cylinder
Induction	Electronic high pressure common rail direct fuel injection with VSS (Variable Swirl System) and intercooled electric control VGS (Variable Geometry System) turbocharger
Cylinder block	Cast iron upper with induction-hardened cylinder bores, cast alloy lower
Emission level	Euro5
Alternator	90 amp with Intelligent Battery Sensor (IBS)

Transmissions

Manual	Isuzu MVL-6S 6-speed manual with high torque capacity and output reduction, 275mm diameter clutch plate and dual mass flywheel		
Automatic	Aisin AWR6B45 II 6-speed with sequential shift and brake shift lock electronically controlled, tri-mode with fuel-saving lock-up torque converter on gears 3, 4, 5 and 6 ▶ Uphill/Downhill Transmission Control: holds gear in varied-gradient ascents, selects gear on steep descents to hold speed with engine braking		
Ratios: 1		6-speed Manual	6-speed Automatic
	1st	4.942	3.600
	2nd	2.452	2.090
	3rd	1.428	1.488
	4th	1.000	1.000
	5th	0.749	0.687
	6th	0.634	0.580
	Reverse	4.597	3.732
Final drive	4x2	3.727	3.727
	4x4	3.727	3.727
	Snorkelled diff breathers to increase fording depth and reduce mud blockage		
Transfer gearing	4x4 low-range	2.482	2.482
	4x4 high-range	1.000	1.000
4x4 system	"Terrain Command" control with 'shift on the fly' 2-high↔4-high selection at up to 100km/h, 4-low with rear differential lock		
Drivetrain system	TCS (Traction Control System) on all model variants		

Steering

Electric power steering with speed-sensing steering feel (light at low speed, heavy at high speed); tilt and telescopic adjustable steering wheel

Engine-speed-sensitive variable capacity Electric power system; 3.84 turns lock-to-lock via tilt-adjustable steering wheel

Chassis

Separate, full-length heavy-duty chassis with 8 cross members on all models

Front suspension
Independent, high-ride, coil springs, gas shock absorbers, upper and lower wishbones, stabiliser bar

Rear suspension
4x2 SX Space Cab Ute, LS-M and all Cab Chassis models: Heavy Duty alloy-steel overslung long-span semi-elliptic leaf springs; gas shock absorbers

4x2 and 4x4 models: Alloy-steel overslung long-span semi-elliptic leaf springs; gas shock absorbers

Axles

Front
Independent 4x4: fully floating with outer CV, inner double offset joints and equal length driveshafts. Rating: 1450kg

Rear
Rigid semi-floating banjo with hypoid final drive and dual tapered needle roller bearings. Rating: 1910kg

Brakes

Anti-lock Brake System (ABS) with Electronic Brakeforce Distribution (EBD), Electronic Stability Control (ESC), Emergency Brake Assist (EBA), Traction Control System (TCS), Rollover Mitigation, Hill Start Assist (HSA), Hill Descent Control (HDC) and Trailer Sway Control (TSC)

320mm dia. ventilated front discs with 2-piston calipers, 295mm rear drums

Power-assisted via 10" servo unit; central pull up park brake

Wheels and Tyres

SX	17" x 7" drilled silver-finish steel; 255 / 65 R17 All-Terrain
LS-M	17" x 7" alloy; 255 / 65 R17 All-Terrain
LS-U	18" x 7.5" alloy; 265 / 60 R18 Highway-Terrain
X-TERRAIN	18" x 7.5" dark grey alloy; 265 / 60 R18 Highway-Terrain
All Models	Full size steel spare wheel

Service Plus

Warranty	For the ultimate peace of mind, every Isuzu D-MAX comes standard with a comprehensive, bumper-to-bumper 6 years/150,000km warranty^.
Roadside Assistance	Enjoy up to 7 years Roadside Assistance< when you complete your scheduled services at a Participating Isuzu UTE Dealer.
Capped Price Servicing	As an owner you will get access to our Capped Price Servicing> Program. The CPS Program covers the first 7 Scheduled Services in line with the Scheduled Service Intervals.

^6 years/150,000km (whichever occurs first), for Isuzu UTE Vehicles with a Warranty Start Date on or after 1/1/19. Excludes trays & accessories. <The Roadside Assistance Program ("RSA Program") provides Coverage to RSA Eligible Vehicles with a Warranty Start Date on or after 1/9/20 for a maximum of 7 years (unlimited kilometres). Initial 13 months Coverage provided from the Warranty Start Date. The Coverage will be reset for another 13 months from each date that a Participating Isuzu UTE Dealer conducts a Scheduled Service on the vehicle. For full terms & conditions visit isuzuute.com.au/roadside-assistance-disclaimer. >The Capped Price Servicing Program ("CPS Program") applies to CPS Eligible Vehicles at Participating Isuzu UTE Dealers only. For 19MY & later vehicle models, the Capped Price Servicing covers the first 7 Scheduled Services for up to 7 years/105,000km (whichever occurs first). CPS Program is subject to change. For full terms & conditions, current pricing & model eligibility visit isuzuute.com.au/service-plus-disclaimer.

SERVICE+PLUS | 6 YEAR WARRANTY^ | 7 YEARS ROADSIDE ASSIST< | 7 YEARS CAPPED PRICE SERVICE>

IDAS

IDAS	Every D-MAX comes with Isuzu's Intelligent Driver Assistance System (IDAS) built-in to protect and enhance the driving experience. IDAS includes smart technologies as well as other passive and active safety features.

IDAS features are designed to assist the driver, but should not be relied upon nor used as a substitute for safe driving practices. Feature operation may vary in different driving conditions. For full explanation of limitations, see Owner's & Driver's Manual.

IDAS
INTELLIGENT DRIVER ASSISTANCE SYSTEM

SPECIFICATIONS

	4x2 High-Ride					4x4							
	Single Cab Chassis **SX**	Space Cab Ute **SX**	Crew Cab Chassis **SX**	Crew Cab Ute **SX**	Crew Cab Ute **LS-U**	Single Cab Chassis **SX**	Space Cab Chassis **SX**	Space Cab Ute **LS-U**	Crew Cab Chassis **SX**	Crew Cab Ute **SX**	Crew Cab Ute **LS-M**	Crew Cab Ute **LS-U**	Crew Cab Ute **X-TERRAIN**
Engine													
2999cc DOHC 4cyl. with intercooled turbo charger (450Nm, 140kW)	●	●	●	●	●	●	●	●	●	●	●	●	●
Transmissions													
6-speed manual transmission	●					●	●		●	●	●	●	
6-speed "Rev-Tronic" automatic transmission with sequential sport mode	●	●	●	●	●	●	●	●	●	●	●	●	●
Safety and Security													
4-channel 4-sensor Anti-lock Brake System (ABS) with Electronic Brakeforce Distribution (EBD)	●	●	●	●	●	●	●	●	●	●	●	●	●
Electronic Stability Control (ESC)	●	●	●	●	●	●	●	●	●	●	●	●	●
Traction Control System (TCS)	●	●	●	●	●	●	●	●	●	●	●	●	●
Emergency Brake Assist (EBA)	●	●	●	●	●	●	●	●	●	●	●	●	●
Hill Start Assist (HSA)	●	●	●	●	●	●	●	●	●	●	●	●	●
Hill Descent Control (HDC)	●	●	●	●	●	●	●	●	●	●	●	●	●
Autonomous Emergency Braking (AEB)	●	●	●	●	●	●	●	●	●	●	●	●	●
Turn Assist with AEB	●	●	●	●	●	●	●	●	●	●	●	●	●
Post-Collision Braking	●	●	●	●	●	●	●	●	●	●	●	●	●
Forward Collision Warning (FCW)	●	●	●	●	●	●	●	●	●	●	●	●	●
Misacceleration Mitigation (*AT models only)	●*	●	●	●	●	●*	●*	●	●*	●*	●*	●*	●
Adaptive Cruise Control (ACC) (*AT models only)	●*	●	●	●	●	●*	●*	●	●*	●*	●*	●*	●
Traffic Sign Recognition (TSR)	●	●	●	●	●	●	●	●	●	●	●	●	●
Intelligent Speed Limiter	●	●	●	●	●	●	●	●	●	●	●	●	●
Manual Speed Limiter	●	●	●	●	●	●	●	●	●	●	●	●	●
Lane Departure Warning (LDW)	●	●	●	●	●	●	●	●	●	●	●	●	●
Lane Departure Prevention (LDP)	●	●	●	●	●	●	●	●	●	●	●	●	●
Lane Keep Assist (LKA) (*AT models only)	●*	●	●	●	●	●*	●*	●	●*	●*	●*	●*	●
Emergency Lane Keeping (ELK)	●	●	●	●	●	●	●	●	●	●	●	●	●
Driver Attention Assist	●	●	●	●	●	●	●	●	●	●	●	●	●
Blind Spot Monitoring (BSM)	●	●	●	●	●	●	●	●	●	●	●	●	●
Rear Cross Traffic Alert (RCTA)	●	●	●	●	●	●	●	●	●	●	●	●	●
Reversing camera	●	●	●	●	●	●	●	●	●	●	●	●	●
Rear parking sensors					●			●				●	●
Front parking sensors													●
8 Airbags: dual front, curtain, side, driver's knee and far side airbags	●	●	●	●	●	●	●	●	●	●	●	●	●
Passenger side SRS airbag on/off switch	●	●	●	●	●	●	●	●	●	●	●	●	●
Height-adjustable upper mounts for front seat belts	●	●	●	●	●	●	●	●	●	●	●	●	●
Pre-tensioners with load limiters for front seat belts	●	●	●	●	●	●	●	●	●	●	●	●	●
Pre-tensioners with load limiters for outer rear seat belts			●	●	●				●	●	●	●	●
3-point retractable seat belts for all rear and centre seating positions			●	●	●				●	●	●	●	●
Intelligent seatbelt reminder (all seats)	●	●	●	●	●	●	●	●	●	●	●	●	●
2 childseat tethers and ISO FIX compatible anchor points			●	●	●				●	●	●	●	●
Height-adjustable head restraints for full-size seats		●	●	●	●		●	●	●	●	●	●	●
Integrated head restraint on front seats	●					●							
Child-proof rear door locks			●	●	●				●	●	●	●	●
Single 10 inch servo brake master cylinder	●	●	●	●	●	●	●	●	●	●	●	●	●
Side anti-intrusion bars inside all doors	●	●	●	●	●	●	●	●	●	●	●	●	●
Engine immobilizer	●	●	●	●	●	●	●	●	●	●	●	●	●
Rear window demister		●	●	●	●		●	●	●	●	●	●	●
High Density Polyethylene (HDPE) fuel tank	●	●	●	●	●	●	●	●	●	●	●	●	●
High mount brake light on cabin	●	●	●	●	●	●	●	●	●	●	●	●	●
Dual horn	●	●	●	●	●	●	●	●	●	●	●	●	●
Protection													
Under-front steel skid plate	●	●	●	●	●	●	●	●	●	●	●	●	●
Steel plate guards: sump, transfer case, fuel tank leading edge; reinforced resin under fuel tank						●	●	●	●	●	●	●	●
Suspension and Brakes													
Standard rear leaf suspension				●	●			●		●		●	●
Heavy duty rear leaf suspension	●	●	●			●	●		●		●		
Front independent, coil spring suspension w/gas shock absorbers, upper and lower wishbones and stabiliser bar	●	●	●	●	●	●	●	●	●	●	●	●	●
Heavy-duty brakes: 320mm ventilated front discs w/twin-pot calipers, 295mm rear drums	●	●	●	●	●	●	●	●	●	●	●	●	●

SPECIFICATIONS

	4x2 High-Ride					4x4							
	Single Cab Chassis **SX**	Space Cab Ute **SX**	Crew Cab Chassis **SX**	Crew Cab Ute **SX**	Crew Cab Ute **LS-U**	Single Cab Chassis **SX**	Space Cab Chassis **SX**	Space Cab Ute **LS-U**	Crew Cab Chassis **SX**	Crew Cab Ute **SX**	Crew Cab Ute **LS-M**	Crew Cab Ute **LS-U**	Crew Cab Ute **X-TERRAIN**
Seating													
Front bucket whiplash protection seats	●	●	●	●	●	●	●	●	●	●	●	●	●
6-way adjustable driver seat	●	●	●	●	●	●	●	●	●	●	●	●	
8-way electric adjustable driver seat													●
Electric adjustable lumbar support (driver seat only)					●			●				●	●
Split-fold rear seat			●	●					●	●			
Split-fold rear seat with centre arm rest					●						●	●	●
Rear centre seat headrest			●	●	●				●	●	●	●	●
In-cabin Storage													
Upper and lower glovebox compartments	●	●	●	●	●	●	●	●	●	●	●	●	●
Power outlet in lower instrument panel	●	●	●	●	●	●	●	●	●	●	●	●	●
Centre floor console	●	●	●	●	●	●	●	●	●	●	●	●	●
Dual-purpose driver and front passenger cup holder tray	●	●	●	●	●	●	●	●	●	●	●	●	●
Rear passenger door cup holders			●	●	●				●	●	●	●	●
Pockets on backs of front seats					●			●			●	●	●
Overhead console with twin map lights and flip-down sunglasses case	●	●	●	●	●	●	●	●	●	●	●	●	●
Front door storage compartment with bottle bulge	●	●	●	●	●	●	●	●	●	●	●	●	●
2 coat hooks			●	●	●				●	●	●	●	●
Flip up convenience hook behind passenger front seat					●			●			●	●	●
Tool storage behind rear seats		●	●	●	●		●	●	●	●	●	●	●
Tool storage behind front seats	●					●							
Storage space under rear flip-up seats			●	●	●				●	●	●	●	●
Storage space under rear flooring		●			●		●	●					
Rear Tub													
Double-walled ute tub		●		●	●			●		●	●	●	●
4 cargo tie-down hooks inside ute tub		●		●	●			●		●	●	●	●
Exterior Style													
Short front overhang for optimal manoeuvrability and approach angle	●	●	●	●	●	●	●	●	●	●	●	●	●
Halogen multi-reflector project lens headlights for extra low beam depth and reduced flare	●	●	●	●		●	●		●	●			
Bi-LED headlights with auto-levelling function					●			●			●	●	●
Automatic headlights	●	●	●	●	●	●	●	●	●	●	●	●	●
Automatic high beam	●	●	●	●	●	●	●	●	●	●	●	●	●
Coming home light	●	●	●	●	●	●	●	●	●	●	●	●	●
Welcome light													●
LED Daytime Running Lights (DRLs)					●			●			●	●	●
LED fog lights					●			●			●	●	●
Matte grey radiator grille	●	●	●	●		●	●		●	●	●		
Chrome radiator grille					●			●				●	
Dark grey radiator grille													●
Colour-coded front bumper	●	●	●	●	●	●	●	●	●	●	●	●	●
Integrated Rear Step Bumper (Colour-coded)		●		●	●			●		●	●	●	●
Rear Bumper (Black)	●		●			●	●		●				
Space cab rear "wing" doors		●					●	●					
Aluminium side steps					●			●				●	
Dark grey side steps													●
Black door handles	●	●	●	●		●	●		●	●			
Colour-coded door and tailgate handles											●		
Chrome door and tailgate handles					●			●				●	
Dark grey door and tailgate handles													●
Lockable tailgate		●		●	●			●		●	●	●	●
Under rail tub liner													●
Aero sports bar													●
Matte black roller tonneau													●
Front and rear underbody spoilers													●
Black power door mirrors	●	●	●	●		●	●		●	●			
Colour-coded power door mirrors with integrated turn indicators											●		
Chrome fold-in power door mirrors with integrated turn indicators					●			●				●	
Dark grey fold-in power door mirrors with integrated turn indicators													●
Centre front roof-mounted bee-sting aerial	●	●	●	●	●	●	●	●	●	●	●	●	●
LED rear combination lamps					●			●				●	●

SPECIFICATIONS

	4x2 High-Ride					4x4							
	Single Cab Chassis **SX**	Space Cab Ute **SX**	Crew Cab Chassis **SX**	Crew Cab Ute **SX**	Crew Cab Ute **LS-U**	Single Cab Chassis **SX**	Space Cab Chassis **SX**	Space Cab Ute **LS-U**	Crew Cab Chassis **SX**	Crew Cab Ute **SX**	Crew Cab Ute **LS-M**	Crew Cab Ute **LS-U**	Crew Cab Ute **X-TERRAIN**
Cabin Amenities													
Dual zone climate control air-conditioning with integrated heater/demister					●			●				●	●
Manual air-conditioning with integrated heater/demister	●	●	●	●		●	●		●	●	●		
Rear seat air-conditioning vents				●	●				●	●	●	●	●
Pollen and fine particle air filter	●	●	●	●	●	●	●	●	●	●	●	●	●
Power windows with one-touch up/down driver's window with safety stop and delay closing	●	●	●	●	●	●	●	●	●	●	●	●	●
Comfort turn signal	●	●	●	●	●	●	●	●	●	●	●	●	●
Central locking with keyless entry	●	●	●	●	●	●	●	●	●	●	●	●	●
Smart keyless entry													●
Walk away lock													●
Push button start													●
Remote engine start													●
Power-adjustable door mirrors with turn indicator lights					●			●			●	●	●
Power-adjustable door mirrors	●	●	●	●		●	●		●	●			
4 speaker sound system	●	●	●	●		●	●		●	●			
6 speaker sound system								●			●		
"Sky Sound" roof-mounted sound system with 8 speakers (mounted in front dash, front doors, rear doors and roof)					●							●	●
9 inch touchscreen display with Apple CarPlay® and Android Auto™					●			●				●	●
7 inch touchscreen display with Apple CarPlay® and Android Auto™	●	●	●	●		●	●		●	●	●		
Built-in satellite navigation with MID turn-by-turn directions					●			●				●	●
Rear centre console USB charging port					●						●	●	●
Tilt and telescopic adjustable steering wheel with electric power steering	●	●	●	●	●	●	●	●	●	●	●	●	●
Urethane steering wheel with cruise, audio and voice recognition controls	●	●	●	●		●	●		●	●	●		
Leather steering wheel with cruise, audio and voice recognition controls					●			●				●	●
Smart MID with digital speedometer, safety information, fuel economy and range, odometer, trip information and service reminder	●	●	●	●	●	●	●	●	●	●	●	●	●
Electro-luminescent gauges	●	●	●	●	●	●	●	●	●	●	●	●	●
"Terrain Command" 4x4 select dial						●	●	●	●	●	●	●	●
Rear differential lock button						●	●	●	●	●	●	●	●
Automatic windshield wipers	●	●	●	●	●	●	●	●	●	●	●	●	●
Intuitive flat wiper blade					●			●				●	●
Day/night interior rear view mirror	●	●	●	●	●	●	●	●	●	●	●	●	●
Sun visors with vanity mirrors (driver and passenger) and ticket retaining strap (driver)					●			●			●	●	●
Fixed A-pillar assist-grips for driver and front passenger	●	●	●	●	●	●	●	●	●	●	●	●	●
Fixed B-pillar assist-grips for rear passengers			●	●	●				●	●	●	●	●
Folding assist-grips for driver and front passenger			●	●	●				●	●	●	●	●
Folding assist-grips for rear passengers			●	●	●				●	●	●	●	●
Carpet flooring					●			●				●	●
Easy-clean vinyl flooring	●	●	●	●		●	●		●	●	●		

Apple CarPlay is a trademark of Apple Inc. Android Auto is a trademark of Google LLC. Not all devices will be compatible & functionality will vary depending on the device.
Mobile Data & SMS rates may apply & are the responsibility of the user. Please check your local road rules before using these functions.

FUEL, WEIGHTS AND DIMENSIONS

	4x2 High-Ride					4x4							
	Single Cab Chassis **SX**	Space Cab Ute **SX**	Crew Cab Chassis **SX**	Crew Cab Ute **SX**	Crew Cab Ute **LS-U**	Single Cab Chassis **SX**	Space Cab Chassis **SX**	Space Cab Ute **LS-U**	Crew Cab Chassis **SX**	Crew Cab Ute **SX**	Crew Cab Ute **LS-M**	Crew Cab Ute **LS-U**	Crew Cab Ute **X-TERRAIN**
D-MAX ADR 81/02[Δ] Fuel Consumption Values													
Transmission (MT = Manual, AT = Automatic)	MT/AT	AT	AT	AT	AT	MT / AT	MT / AT	AT	MT / AT	MT / AT	MT / AT	MT / AT	AT
FUEL CONSUMPTION (litres/100km)													
Combined	8.0	7.7	8.0	7.7	7.7	8.0	8.0	8.0	8.0	7.7/8.0	7.7/8.0	7.7/8.0	8.0
Urban	10.2/9.8	9.5	9.8	9.5	9.5	10.2/9.8	10.2/9.8	9.8	10.2/9.8	9.7/9.8	9.7/9.8	9.7/9.8	9.8
Extra Urban	6.7/6.9	6.7	6.9	6.7	6.7	6.7/6.9	6.7/6.9	6.9	6.7/6.9	6.6/6.9	6.6/6.9	6.6/6.9	6.9
CO^2 (g/km)													
Combined	206/207	200	207	200	200	206/207	206/207	207	206/207	200/207	200/207	200/207	207
Urban	262/254	246	254	246	246	262/254	262/254	254	262/254	251/254	251/254	251/254	254
Extra Urban	174/180	174	180	174	174	174/180	174/180	180	174/180	171/180	171/180	171/180	180
Dimensions (mm unless stated otherwise)													
Wheelbase	3125	3125	3125	3125	3125	3125	3125	3125	3125	3125	3125	3125	3125
Overall length	5325	5265	5285	5265	5265	5325	5285	5265	5285	5265	5265	5265	5280
Overall width (excluding door mirrors)	1870	1870	1870	1870	1870	1870	1870	1870	1870	1870	1870	1870	1880
Overall height (*depends on body fitted)	1790*	1785	1800*	1785	1790	1790*	1800*	1790	1800*	1785	1785	1790	1810
Front overhang	890	890	890	890	890	890	890	890	890	890	890	890	905
Rear overhang (*depends on body fitted)	1310*	1250	1270*	1250	1250	1310*	1270*	1250	1270*	1250	1250	1250	1250
Wheel track width	1570	1570	1570	1570	1570	1570	1570	1570	1570	1570	1570	1570	1570
Ground clearance	235	235	235	235	240	235	235	240	235	235	235	240	240
Turning circle diameter between kerbs (metres)	12.5	12.5	12.5	12.5	12.5	12.5	12.5	12.5	12.5	12.5	12.5	12.5	12.5
Approach angle	29.6°	30°	30°	30°	30.5°	29.6°	30°	30.5°	30°	30°	30°	30.5°	30.5°
Departure angle	28.9°	23.9°	27°	23.9°	24.2°	28.9°	27°	24.2°	27°	23.9°	23.9°	24.2°	24.2°
Ramp-over angle	23.9°	23.3°	23.9°	23.3°	23.8°	23.9°	23.9°	23.8°	23.9°	23.3°	23.3°	23.8°	23.8°
Load area (mm)													
Cab to rear axle	1240	765	450	450	450	1240	765	765	450	450	450	450	450
Length (top)	-	1805	-	1495	1495	-	-	1805	-	1495	1495	1495	1495
Length (floor) (*inside genuine accessory tray body)	2550*	1835	1800*	1570	1570	2550*	2100*	1835	1800*	1570	1570	1570	1570
Maximum width (*inside genuine accessory alloy tray body)	1777*	1530	1777*	1530	1530	1777*	1777*	1530	1777*	1530	1530	1530	1530
Width between wheel houses	-	1122	-	1122	1122	-	-	1122	-	1122	1122	1122	1122
Depth	-	490	-	490	490	-	-	490	-	490	490	490	490
Interior (mm)													
Leg room - front	1075	1075	1075	1075	1075	1075	1075	1075	1075	1075	1075	1075	1075
Leg room - rear	-	-	905	905	905	-	-	-	905	905	905	905	905
Shoulder room - front	1460	1460	1460	1460	1460	1460	1460	1460	1460	1460	1460	1460	1460
Head room - front	1020	1020	1020	1020	1020	1020	1020	1020	1020	1020	1020	1020	1020
Rear cargo space	-	730	-	-	-	-	730	730	-	-	-	-	-
Mass (kg)													
Gross Vehicle Mass (GVM)	3000	3000	3000	3000	3000	3100	3100	3100	3100	3100	3100	3100	3100
Kerb weight^	1695/1700	1910	1825	1950	1960	1780/1790	1850/1860	2000	1900/1910	2025/2035	2020/2030	2035/2045	2130
Payload~ (cab chassis models: final mass depends on body fitted)	1305/1300	1090	1175	1050	1040	1320/1310	1250/1240	1100	1200/1190	1075/1065	1080/1070	1065/1055	970
Gross Combination Mass (GCM)	5850	5850	5850	5850	5850	5950	5950	5950	5950	5950	5950	5950	5950
Maximum towing mass (braked trailer)	3500	3500	3500	3500	3500	3500	3500	3500	3500	3500	3500	3500	3500
Maximum towing mass (non-braked trailer)	750	750	750	750	750	750	750	750	750	750	750	750	750
Maximum tow ball download (when fitted with genuine Isuzu UTE tow kit)	350	350	350	350	350	350	350	350	350	350	350	350	350
Fuel tank capacity (litres)	76	76	76	76	76	76	76	76	76	76	76	76	76

[Δ]Fuel consumption & emissions figures based on ADR 81/02 & are to be used for vehicle comparison purposes only. Actual fuel consumption & emissions will vary depending on many factors including, but not limited to, traffic conditions, individual driving style & vehicle condition. ^Kerb weight - unladen mass of vehicle & full tank of fuel, excludes tray body for cab chassis vehicles. Fuel weight ratio is based on Fuel Standard (Automotive Diesel) Determination 2001. ~Payload equals GVM minus kerb weight.

CAB CHASSIS BODY STYLES AND DIMENSIONS

SX Single Cab Chassis 4x2 & 4x4

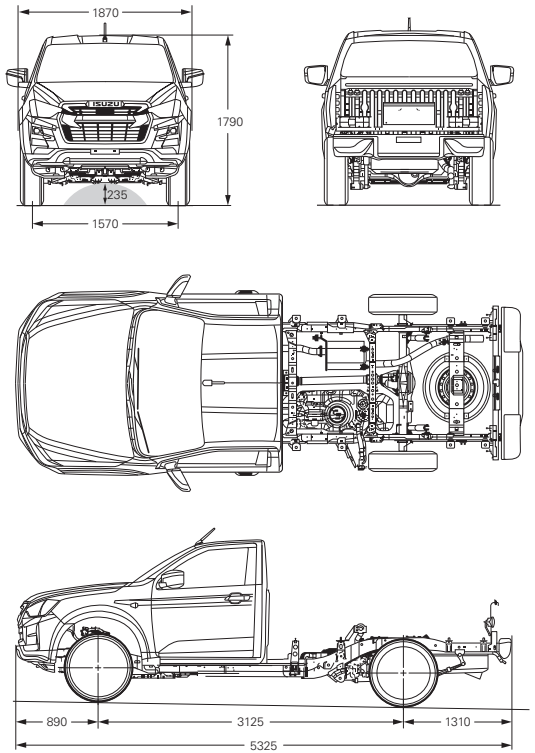

SX Space Cab Chassis 4x4

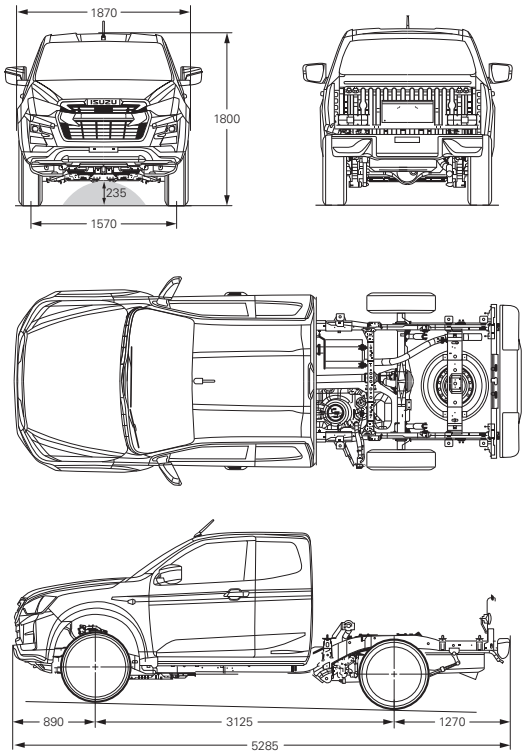

SX Crew Cab Chassis 4x2 & 4x4

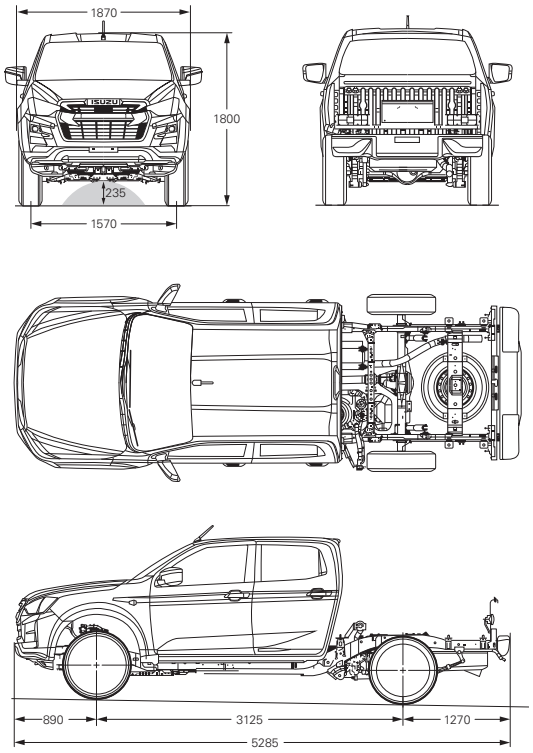

UTE BODY STYLES AND DIMENSIONS

SX Space Cab Ute 4x2

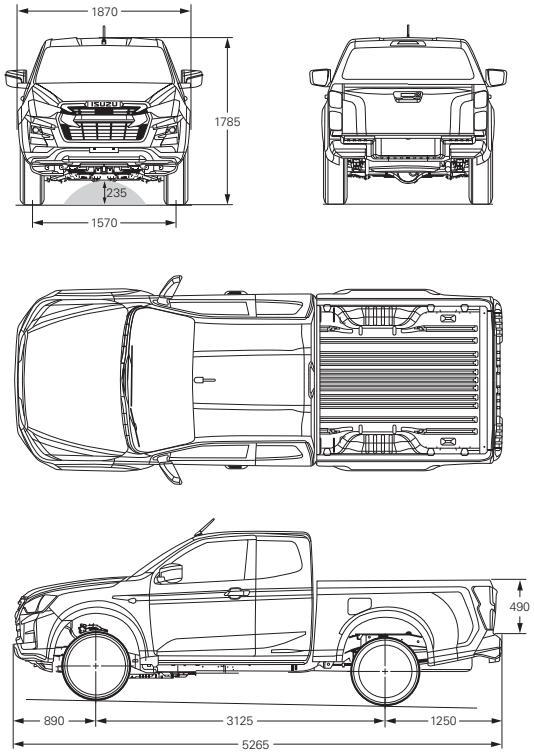

LS-U Space Cab Ute 4x4

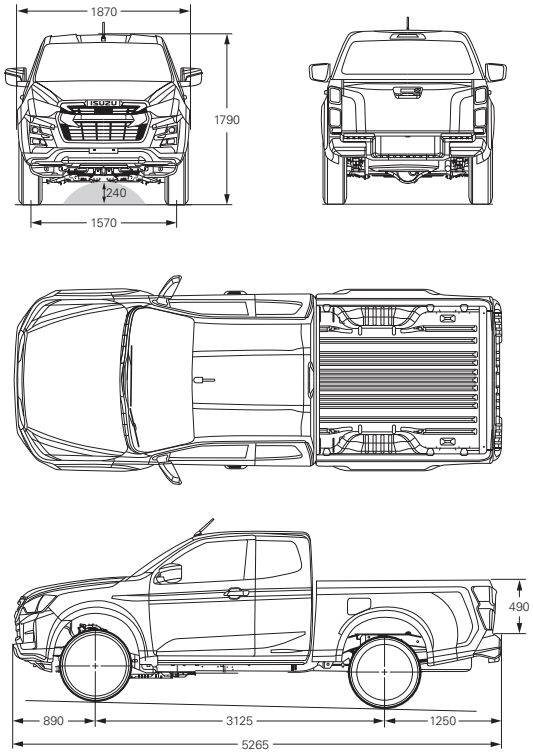

LS-M Crew Cab Ute 4x4

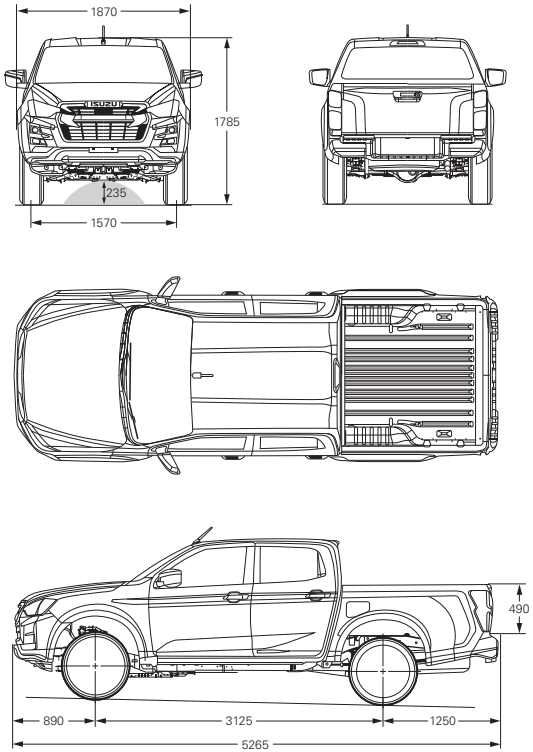

UTE BODY STYLES AND DIMENSIONS

LS-U Crew Cab Ute 4x2

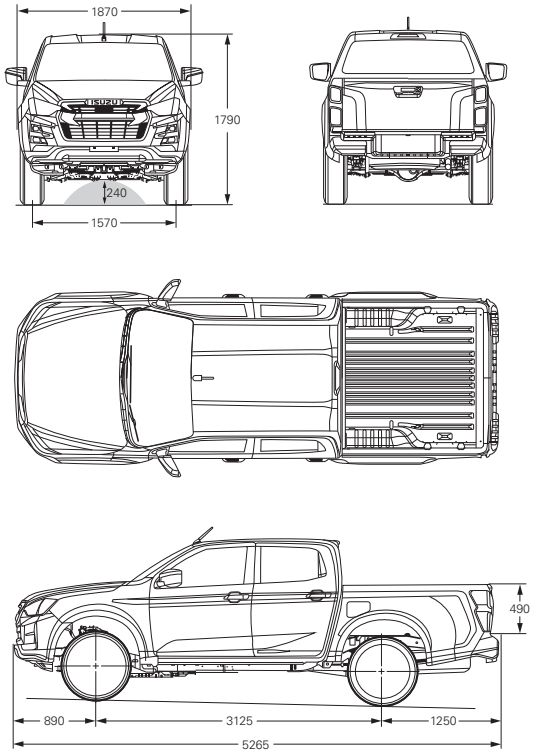

LS-U Crew Cab Ute 4x4

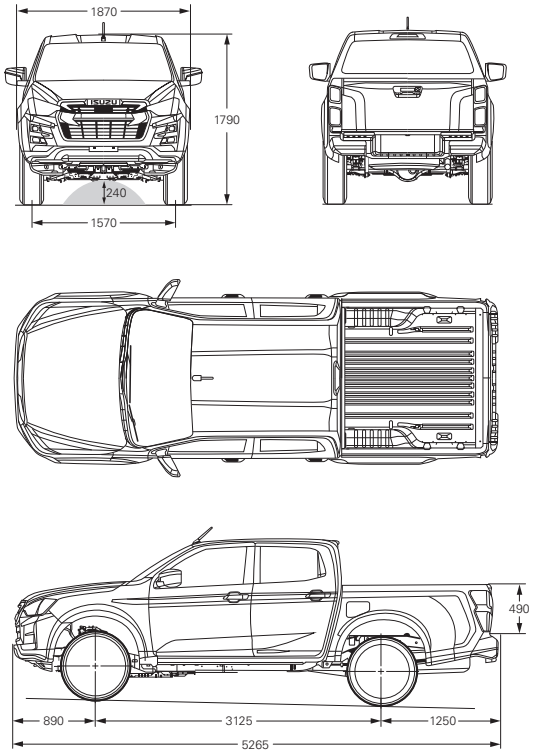

X-TERRAIN Crew Cab Ute 4x4

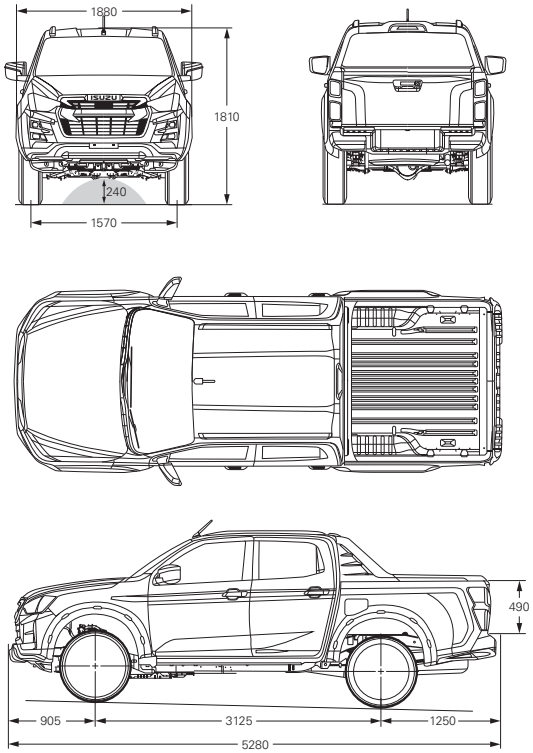

COLOURS AND TRIM

Body Colours

Basalt Black mica

Cobalt Blue mica

Mercury Silver metallic

Obsidian Grey mica

Mineral White

Marble White pearl
(LS-U & X-TERRAIN Exclusive)

Magnetic Red mica
(LS-U & X-TERRAIN Exclusive)

Volcanic Amber metallic
(X-TERRAIN Exclusive)

Interior Trim

Standard Black Cloth
(On SX models)

High Grade Cloth
(On LS-M & LS-U models)

Leather Accented#
(On X-TERRAIN models)

#Seats have leather touches or accents, but are not wholly leather.

TRAY STYLES

	Economy Alloy	General Purpose Alloy	Heavy Duty Alloy	Heavy Duty Steel	Mine Specification Steel
Single					
Space					
Crew					

ISUZU UTE

GO YOUR OWN WAY

www.isuzuute.com.au Toll Free: 1300 147 898

Isuzu UTE Australia Pty Ltd (ABN 80 129 563 739, 1000 Wynnum Road, Cannon Hill, Queensland, 4170, Australia) reserves the right to change specifications & content without notice, subject to any applicable Federal, State or Territory laws or regulations which may apply. Any accessories shown herein are illustrative & generally are optional at extra cost, not standard equipment. Colours depicted herein may differ from actual due to the printing process. Please refer to isuzuute.com.au or consult your authorised Isuzu UTE Dealer for current availability of models, options, specifications, colours & Isuzu UTE Genuine Accessories. No part of this brochure can be reproduced without the written permission from Isuzu UTE Australia.

All information is true and correct at the time of publishing, August 2020. Printed in Australia. © Copyright Isuzu UTE Australia Pty Ltd 2020.

Part No.: M900210010 – 21MY D-MAX SALES BROCHURE