PARKING BRAKE SYSTEM

PROBLEM SYMPTOMS TABLE

HINT:
Use the table below to help you find the cause of the problem. The numbers indicate the ranked order of probability of each of the possible causes. Check each part in the order suggested. If necessary, replace the applicable parts.

Symptom	Suspected area	See page
Brake drag	1. Parking brake lever travel (Out of adjustment)	PB-1
	2. Parking brake wire (Sticking)	PB-17
	3. Rear drum brake shoe clearance (Out of adjustment)	BR-67
	4. Parking brake shoe lining (Cracked or distorted)	BR-62
	5. Tension or return spring (Damaged)	BR-60

ADJUSTMENT

1. **REMOVE REAR WHEEL**
2. **ADJUST REAR DRUM BRAKE SHOE CLEARANCE (See page BR-67)**
3. **INSTALL REAR WHEEL**
   Torque: 103 N*m (1,050 kgf*cm, 76 ft.*lbf)
4. **INSPECT PARKING BRAKE LEVER TRAVEL**
   (a) Slowly pull the parking brake lever to the fully applied position, counting the number of clicks.
   Parking brake lever travel:
   6 to 9 clicks at 200 N (20 kgf, 45 lbf)
5. **REMOVE CENTER LOWER INSTRUMENT PANEL FINISH PANEL (for Sedan) (See page PB-6)**
6. **REMOVE SHIFT LEVER KNOB SUB-ASSEMBLY (for Manual Transaxle)**
7. **REMOVE SHIFTING HOLE COVER SUB-ASSEMBLY (for Hatchback Manual Transaxle) (See page PB-6)**
8. **REMOVE UPPER CONSOLE PANEL SUB-ASSEMBLY (for Sedan) (See page PB-6)**
9. **REMOVE REAR CONSOLE BOX COVER (for Hatchback) (See page PB-6)**
10. **REMOVE REAR UPPER CONSOLE PANEL SUB-ASSEMBLY (for Sedan) (See page PB-7)**
11. **REMOVE CONSOLE BOX CARPET (See page PB-7)**
12. **REMOVE REAR CONSOLE BOX ASSEMBLY (See page PB-8)**
13. **ADJUST PARKING BRAKE LEVER TRAVEL**
    (a) Loosen the lock nut and turn the adjusting nut until the parking brake lever travel is corrected to within the specified range.
    Parking brake lever travel:
    6 to 9 clicks at 200 N (20 kgf, 45 lbf)
    (b) Tighten the lock nut.
    Torque: 5.4 N*m (55 kgf*cm, 48 in.*lbf)
    (c) Operate the parking brake lever 3 to 4 times, and check the parking brake lever travel.
    (d) Check whether the parking brake drags or not.
    (e) When operating the parking brake lever, check that the brake warning light illuminates.
    Standard:
    Brake warning light always illuminates at the first click.

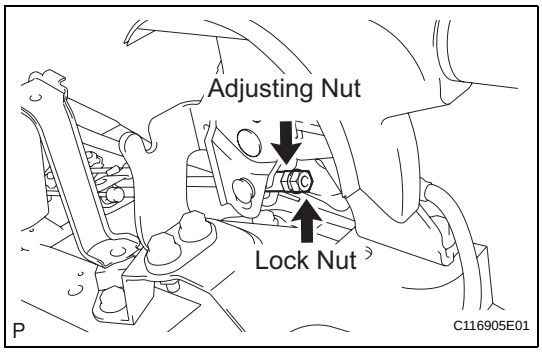

14. **INSTALL REAR CONSOLE BOX ASSEMBLY (See page PB-10)**
15. **INSTALL CONSOLE BOX CARPET (See page PB-11)**
16. **INSTALL REAR CONSOLE BOX COVER (for Hatchback) (See page PB-11)**

17. **INSTALL REAR UPPER CONSOLE PANEL SUB-ASSEMBLY (for Sedan) (See page IP-89)**
18. **INSTALL SHIFTING HOLE COVER SUB-ASSEMBLY (for Hatchback Manual Transaxle) (See page PB-12)**
19. **INSTALL UPPER CONSOLE PANEL SUB-ASSEMBLY (for Sedan) (See page PB-12)**
20. **INSTALL SHIFT LEVER KNOB SUB-ASSEMBLY (for Manual Transaxle)**
21. **INSTALL CENTER LOWER INSTRUMENT PANEL FINISH PANEL (for Sedan) (See page PB-12)**

PARKING BRAKE LEVER

COMPONENTS

for Hatchback:

for Manual Transaxle:

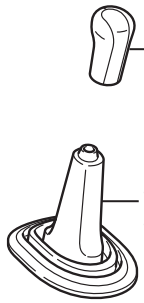

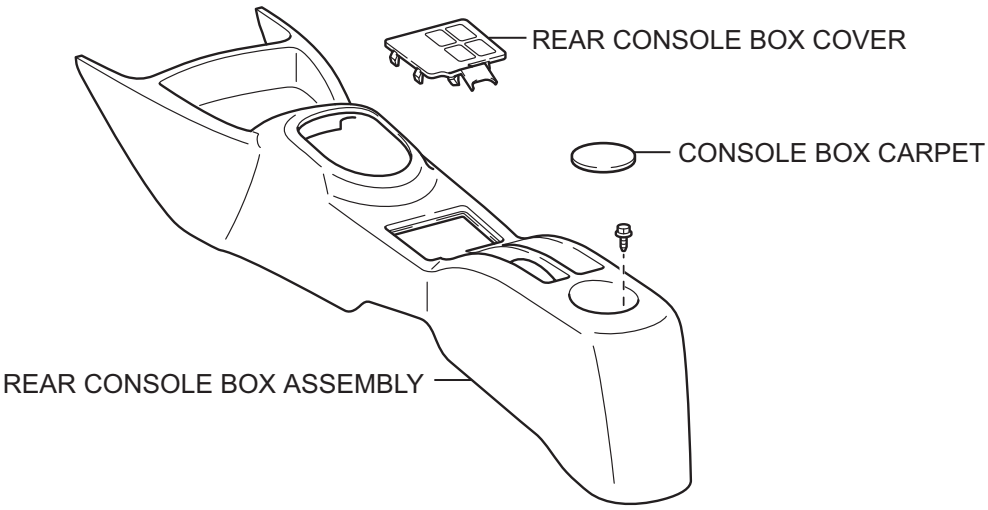

T

C133142E01

for Sedan:

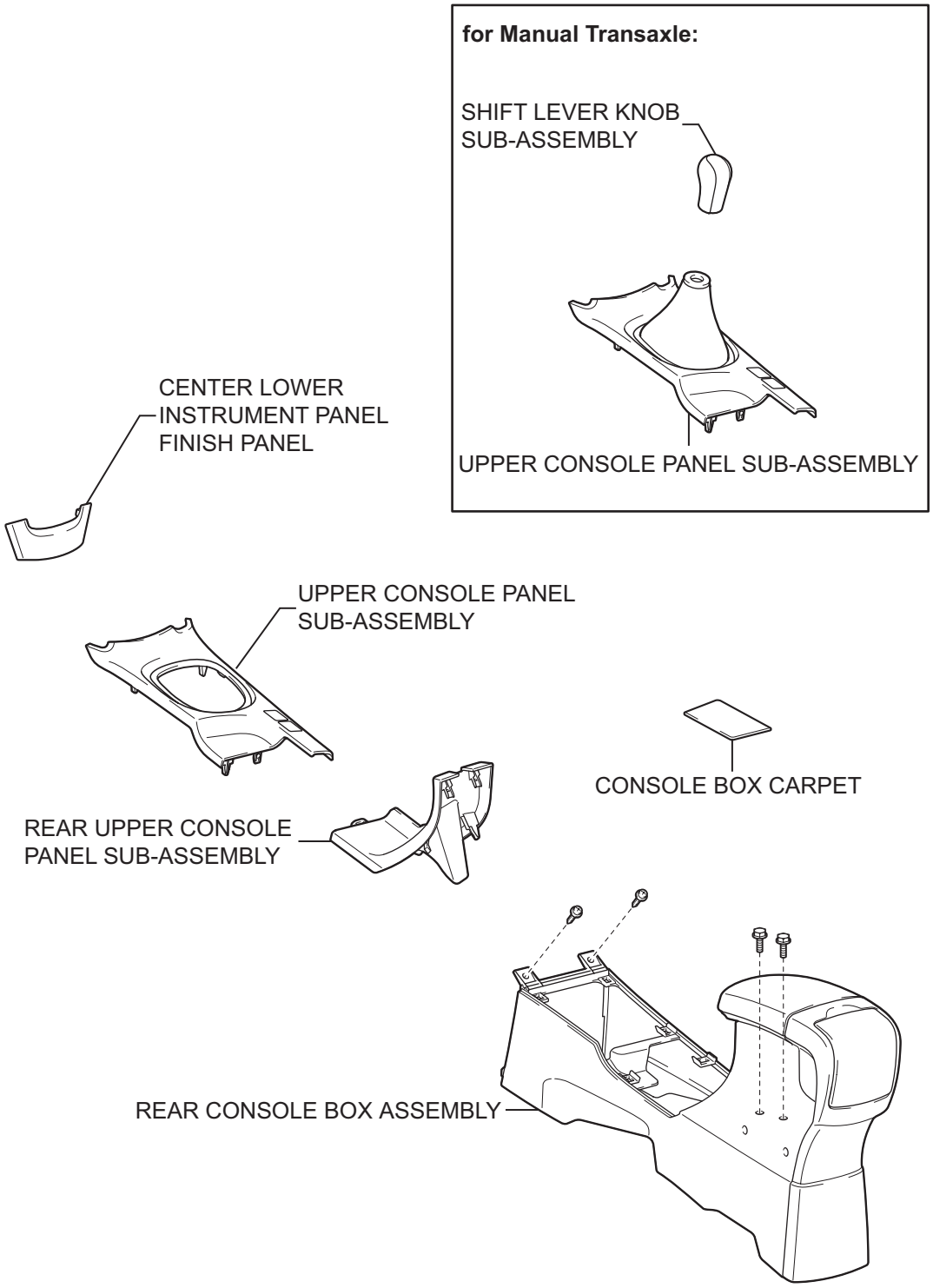

P

B132385E02

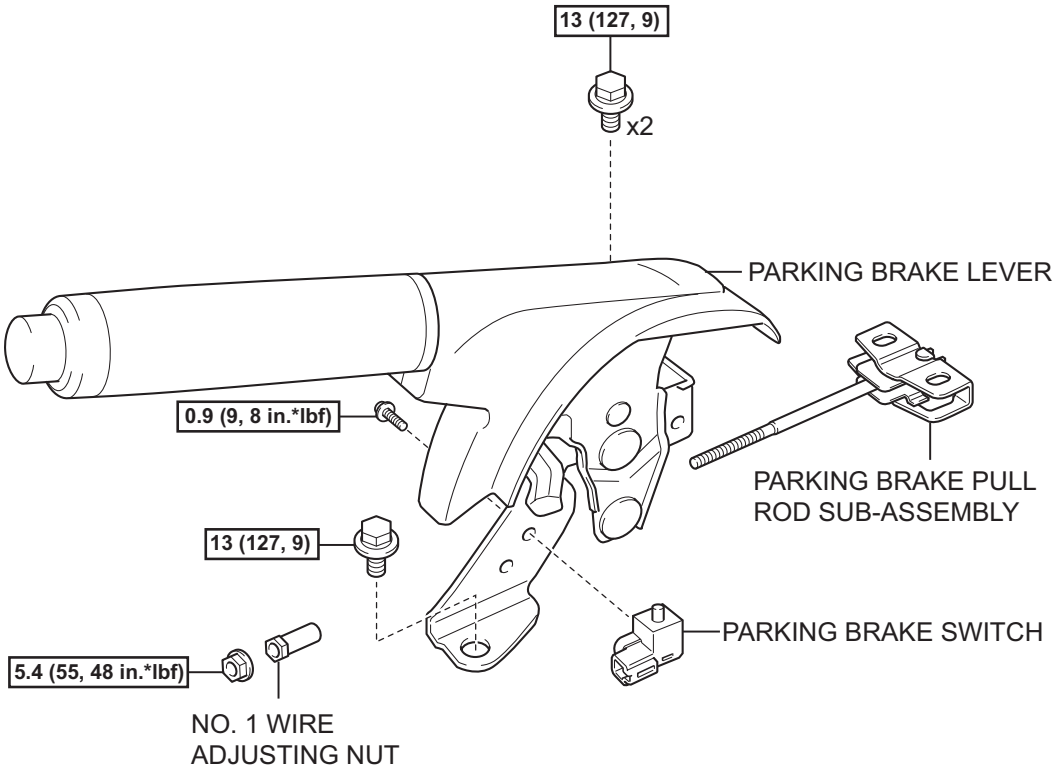

N*m (kgf*cm, ft*lbf) :Specified torque

Y

C109014E01

REMOVAL

1. DISCONNECT CABLE FROM NEGATIVE BATTERY TERMINAL

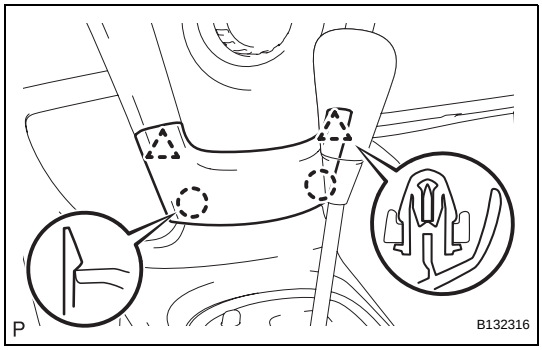

2. REMOVE CENTER LOWER INSTRUMENT PANEL FINISH PANEL (for Sedan)

(a) Disengage the 2 claws and 2 clips and remove the instrument panel finish panel.

3. REMOVE SHIFT LEVER KNOB SUB-ASSEMBLY (for Manual Transaxle)

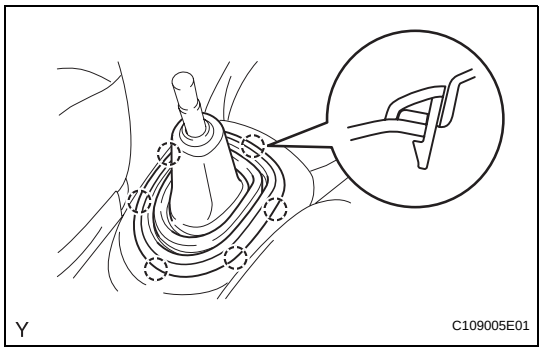

4. REMOVE SHIFTING HOLE COVER SUB-ASSEMBLY (for Hatchback Manual Transaxle)

(a) Disengage the 6 claws and remove the shifting hole cover.

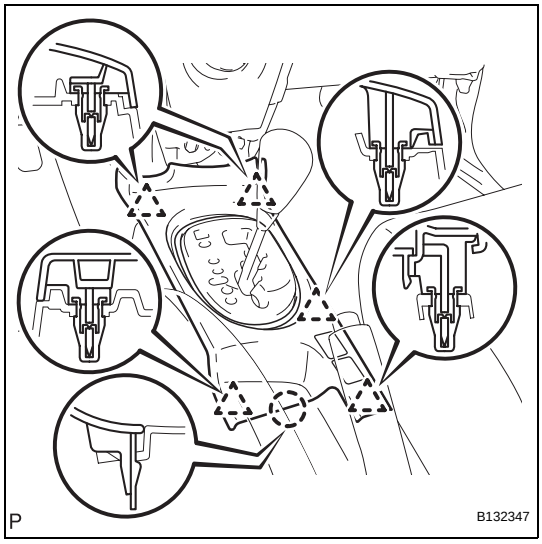

5. REMOVE UPPER CONSOLE PANEL SUB-ASSEMBLY (for Sedan)

(a) Shift the shift lever into the N position.

(b) Disengage the 5 clips and the claw and remove the upper console panel.

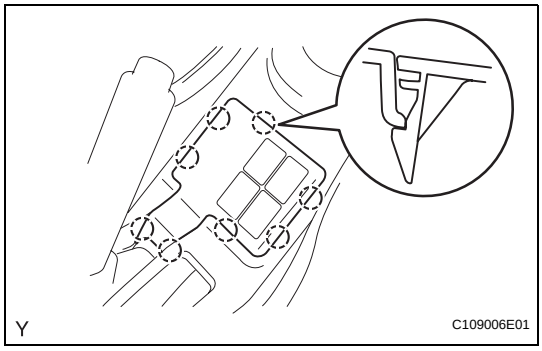

6. REMOVE REAR CONSOLE BOX COVER (for Hatchback)

(a) Disengage the 8 claws and remove the rear console box cover.

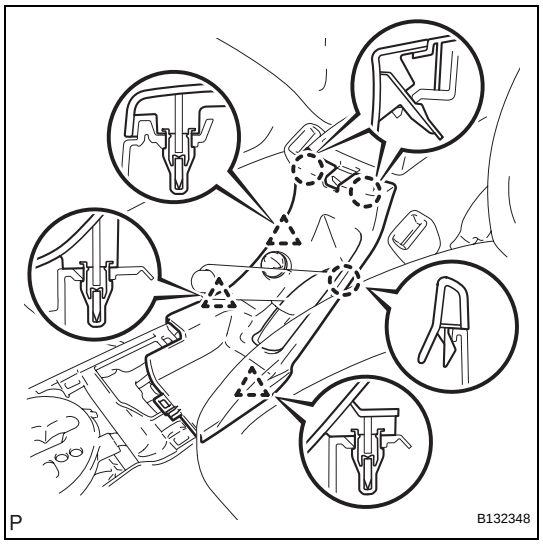

7. REMOVE REAR UPPER CONSOLE PANEL SUB-ASSEMBLY (for Sedan)

(a) Disengage the 3 clips and 3 claws.

(b) Disconnect the connector and remove the rear upper console panel.

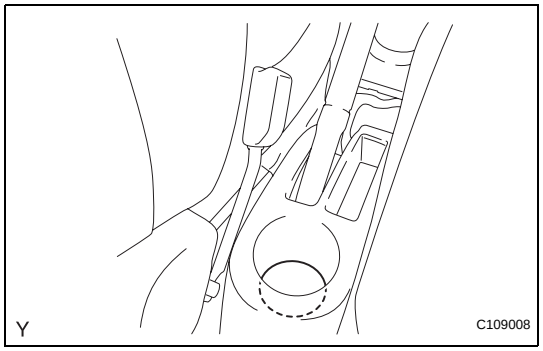

8. REMOVE CONSOLE BOX CARPET

(a) for Hatchback:

(1) Remove the console box carpet.

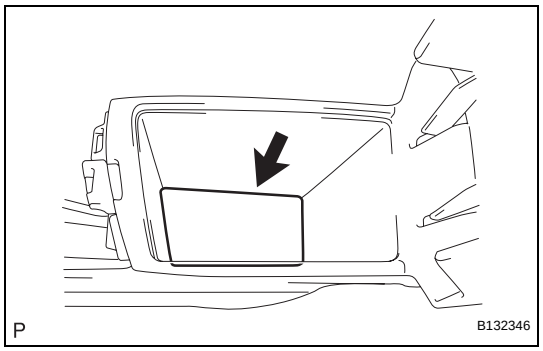

(b) for Sedan:

(1) Remove the console box carpet.

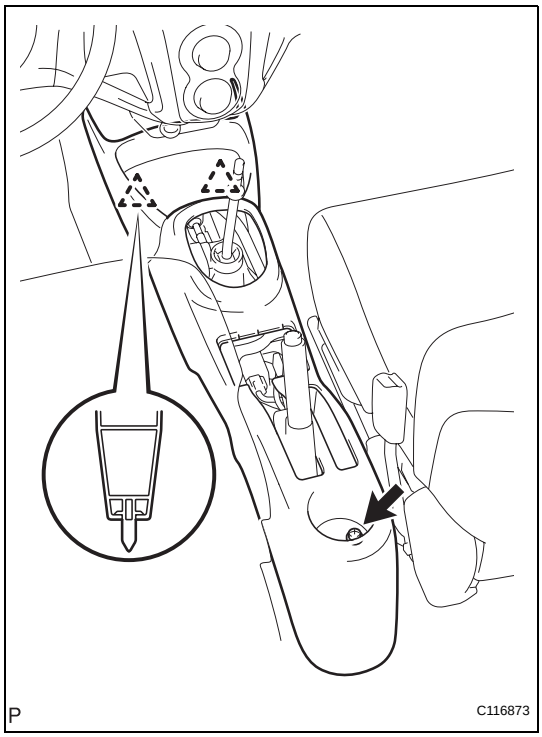

9. REMOVE REAR CONSOLE BOX ASSEMBLY

(a) for Hatchback:

(1) Remove the bolt.

(2) Disengage the 2 clips to remove the rear console box.

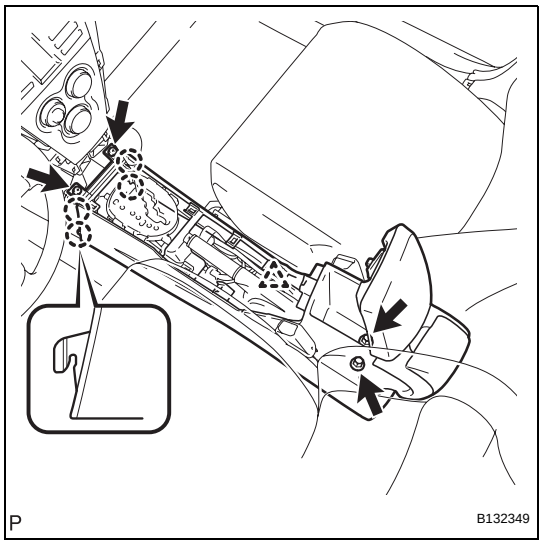

(b) for Sedan:

(1) Disconnect the clamp.

(2) Remove the 2 bolts and 2 screws.

(3) Disengage the 4 claws and remove the rear console box.

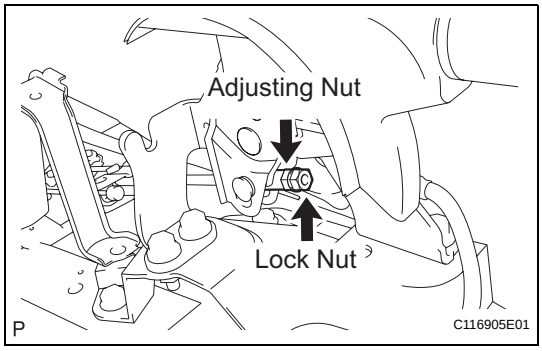

10. LOOSEN NO. 1 WIRE ADJUSTING NUT

(a) Loosen the lock nut and the adjusting nut.

11. DISCONNECT NO. 3 PARKING BRAKE CABLE ASSEMBLY

(a) Disconnect the parking brake cable from the parking brake equalizer.

12. DISCONNECT NO. 2 PARKING BRAKE CABLE ASSEMBLY

(a) Disconnect the parking brake cable from the parking brake equalizer.

13. REMOVE PARKING BRAKE LEVER

(a) Disconnect the parking brake switch connector.

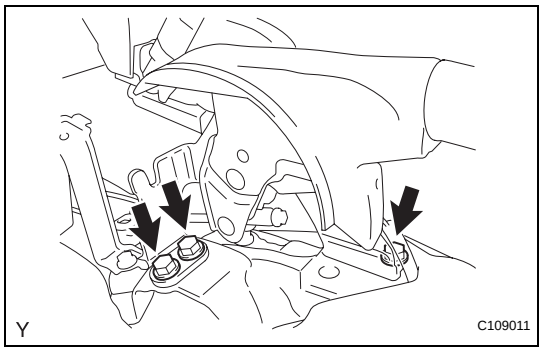

(b) Remove the 3 bolts and remove the parking brake lever.

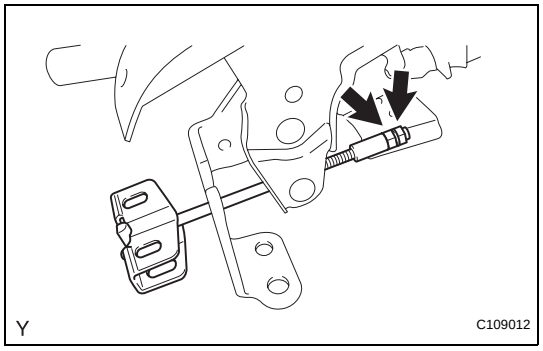

(c) Remove the lock nut and adjusting nut to remove the parking brake pull rod and parking brake equalizer.

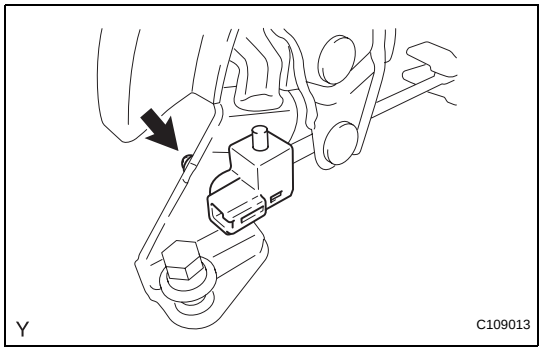

14. REMOVE PARKING BRAKE SWITCH

(a) Remove the screw and remove the parking brake switch.

INSTALLATION

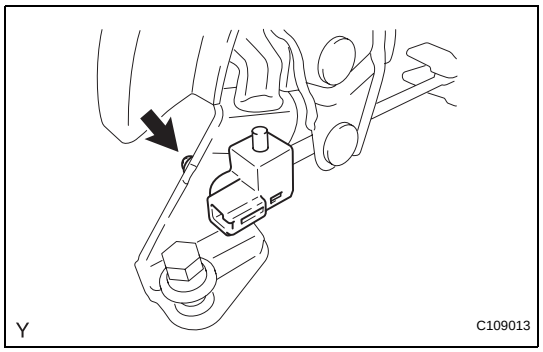

1. INSTALL PARKING BRAKE SWITCH

(a) Install the parking brake switch with the screw.
Torque: 0.9 N*m (9 kgf*cm, 8 in.*lbf)

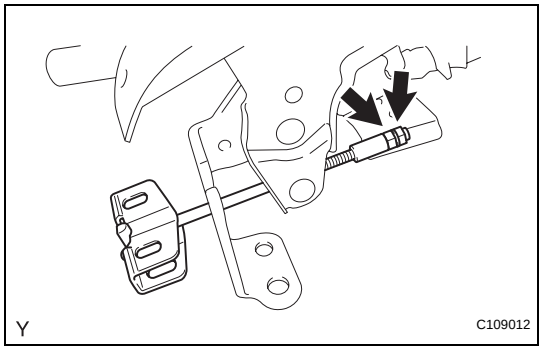

2. INSTALL PARKING BRAKE LEVER

(a) Install the parking brake pull rod and parking brake equalizer, and then provisionally install the adjusting nut and the lock nut.

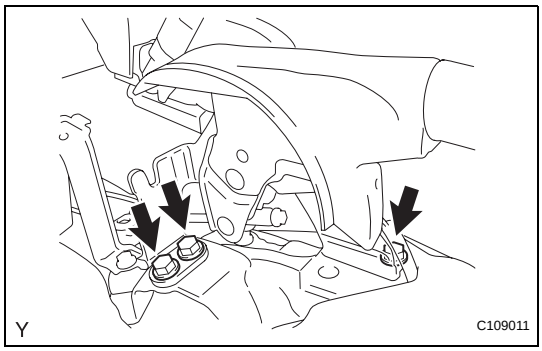

(b) Install the parking brake lever with the 3 bolts.
Torque: 13 N*m (127 kgf*cm, 9 ft.*lbf)
(c) Connect the parking brake switch connector.

3. INSTALL NO. 2 PARKING BRAKE CABLE ASSEMBLY
(a) Connect the parking brake cable to the parking brake equalizer.

4. INSTALL NO. 3 PARKING BRAKE CABLE ASSEMBLY
(a) Connect the parking brake cable to the parking brake equalizer.

5. INSPECT PARKING BRAKE LEVER TRAVEL (See page PB-1)

6. ADJUST PARKING BRAKE LEVER TRAVEL (See page PB-2)

7. INSTALL REAR CONSOLE BOX ASSEMBLY
(a) for Hatchback:
(1) Engage the 2 clips and install the rear console box.
(2) Install the bolt.

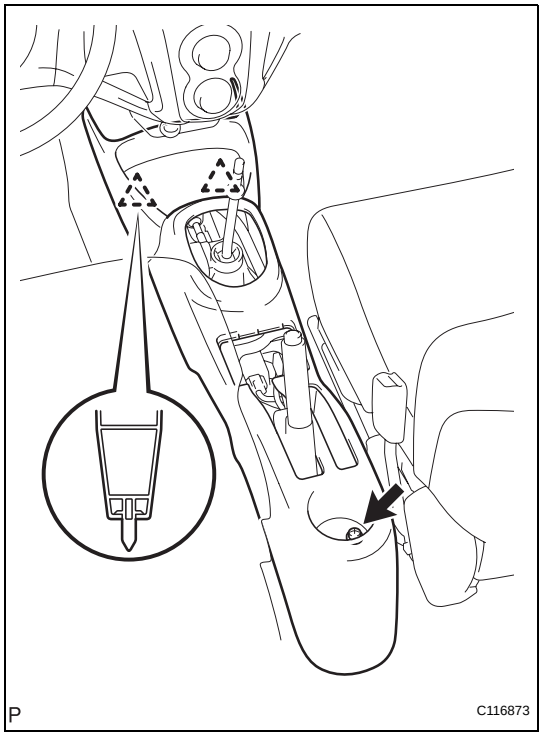

(b) for Sedan:
(1) Engage the 4 claws and install the rear console box.
(2) Install the 2 bolts and 2 screws.
(3) Connect the clamp.

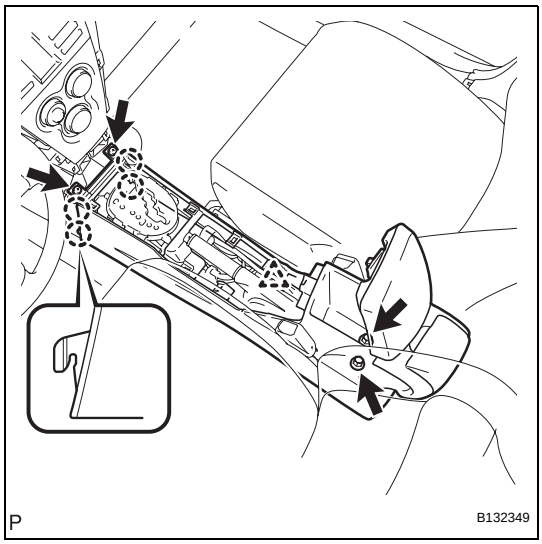

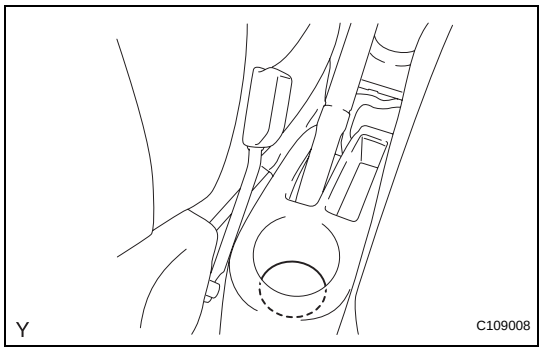

8. INSTALL CONSOLE BOX CARPET

(a) for Hatchback:

(1) Install the console box carpet.

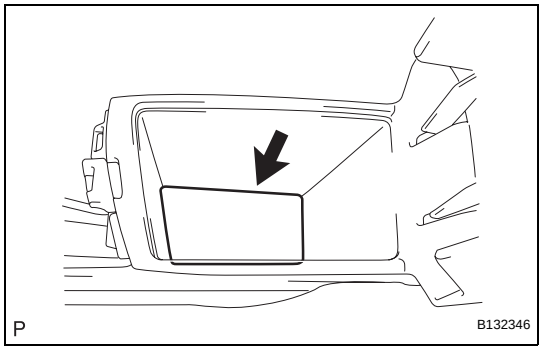

(b) for Sedan:

(1) Install the console box carpet.

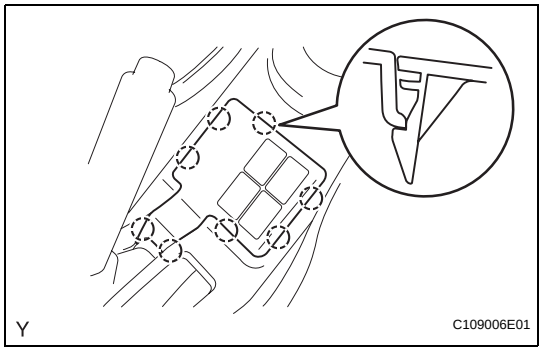

9. INSTALL REAR CONSOLE BOX COVER (for Hatchback)

(a) Engage the 8 claws to install the rear console box cover.

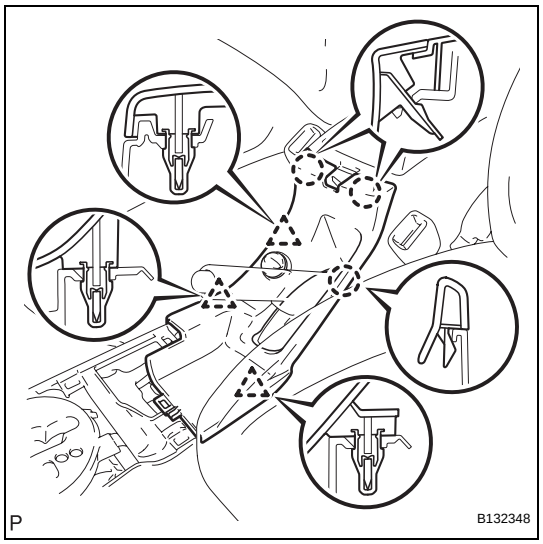

10. INSTALL REAR UPPER CONSOLE PANEL SUB-ASSEMBLY (for Sedan)

(a) Connect the connector.

(b) Engage the 3 clips and 3 claws and install the rear upper console panel.

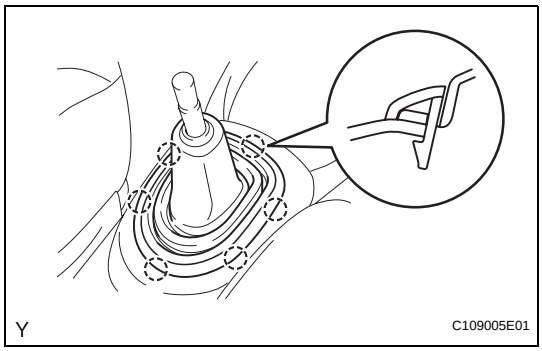

11. INSTALL SHIFTING HOLE COVER SUB-ASSEMBLY (for Hatchback Manual Transaxle)

(a) Engage the 6 claws to install the shifting hole cover.

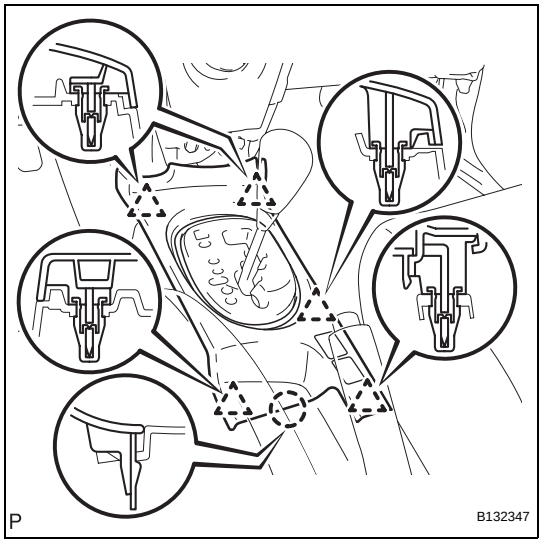

12. INSTALL UPPER CONSOLE PANEL SUB-ASSEMBLY (for Sedan)

(a) Engage the 5 clips and the claw and install the upper console panel.

13. INSTALL SHIFT LEVER KNOB SUB-ASSEMBLY (for Manual Transaxle)

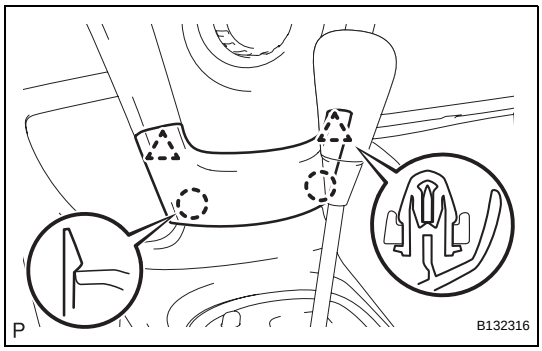

14. INSTALL CENTER LOWER INSTRUMENT PANEL FINISH PANEL (for Sedan)

(a) Engage the 2 claws and 2 clips and install the instrument panel finish panel.

15. CONNECT CABLE TO NEGATIVE BATTERY TERMINAL
Torque: 5.4 N*m (55 kgf*cm, 48 in.*lbf)

PARKING BRAKE CABLE

COMPONENTS

for Hatchback:

for Manual Transaxle:

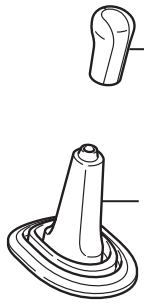

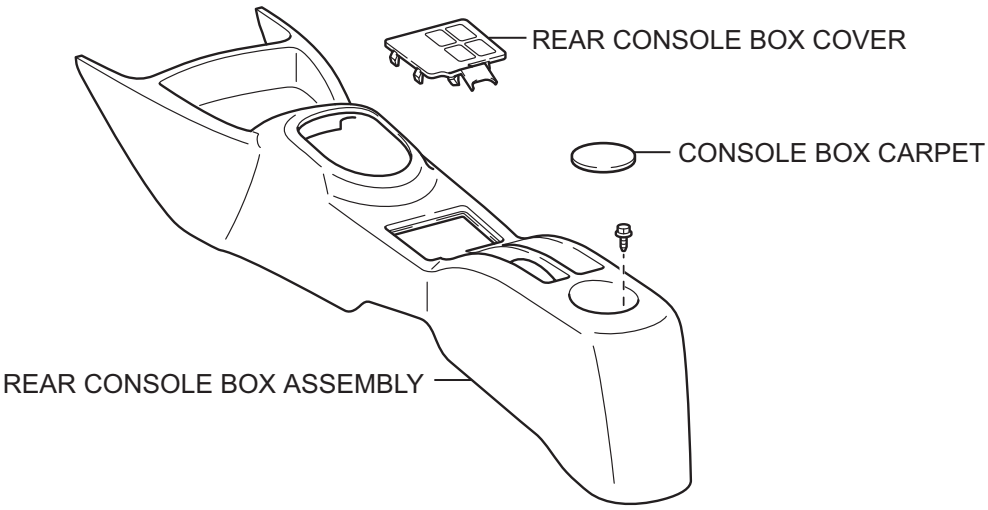

T

C133142E01

for Sedan:

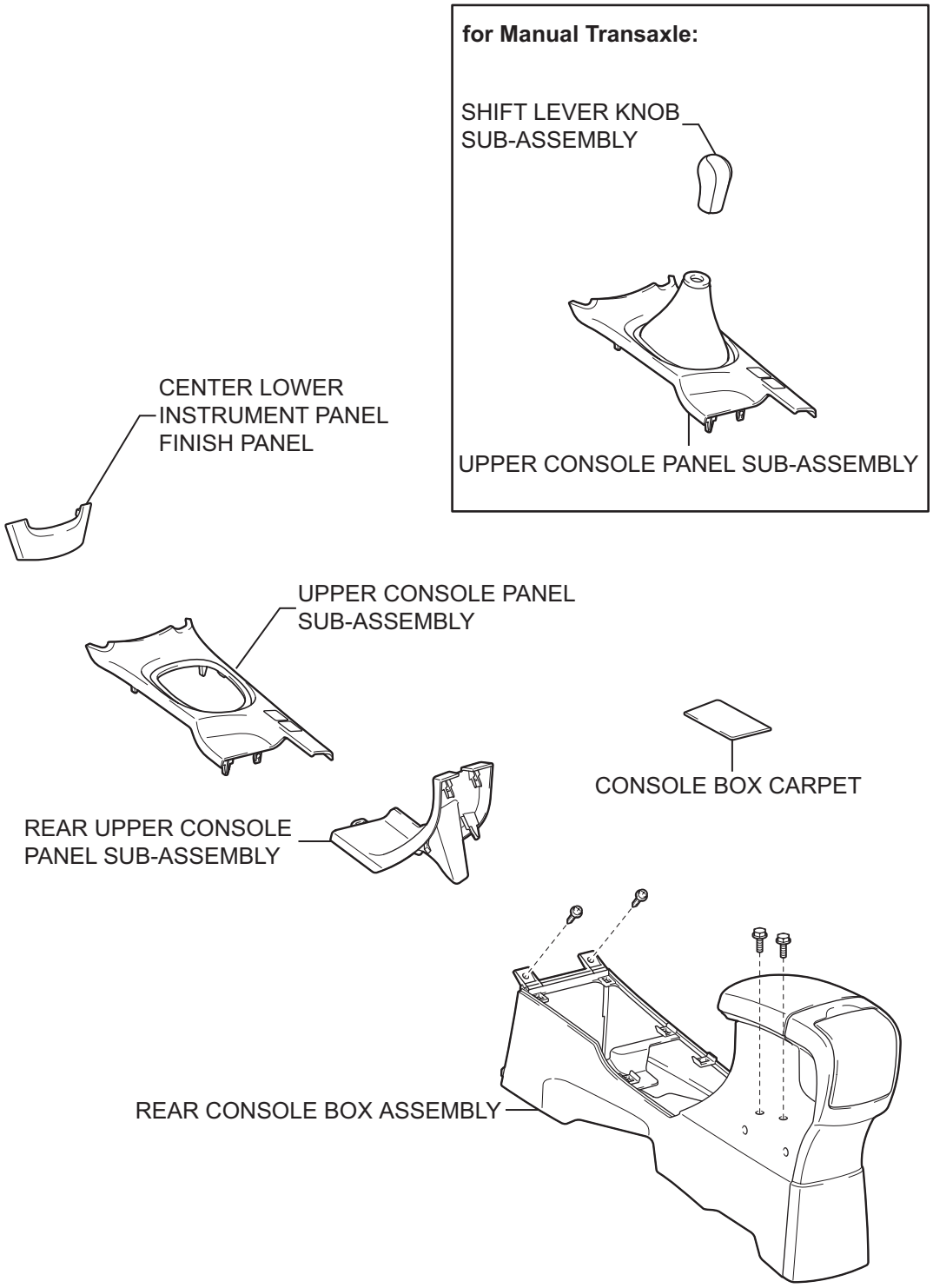

P

B132385E02

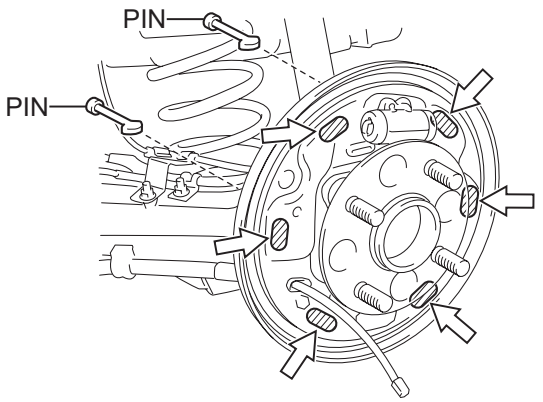

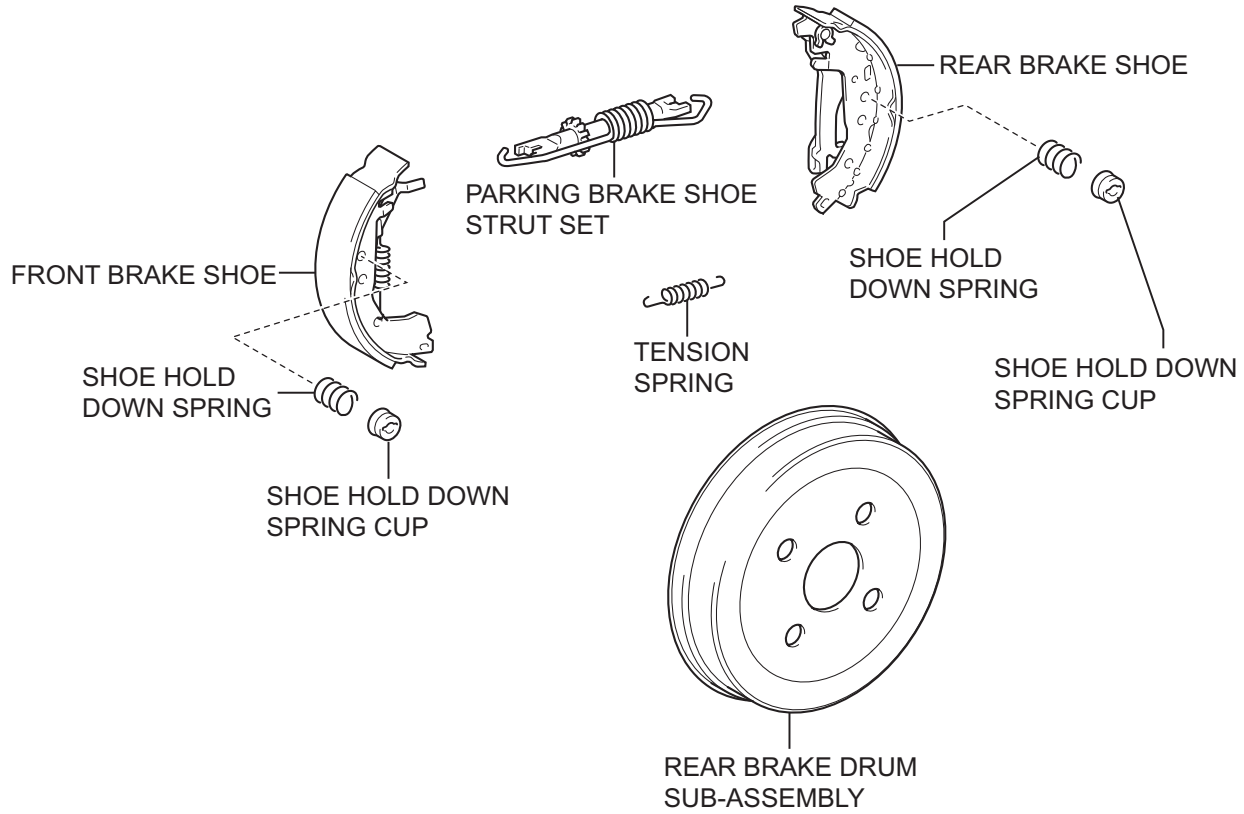

⇦ High temperature grease

Y

C126203E02

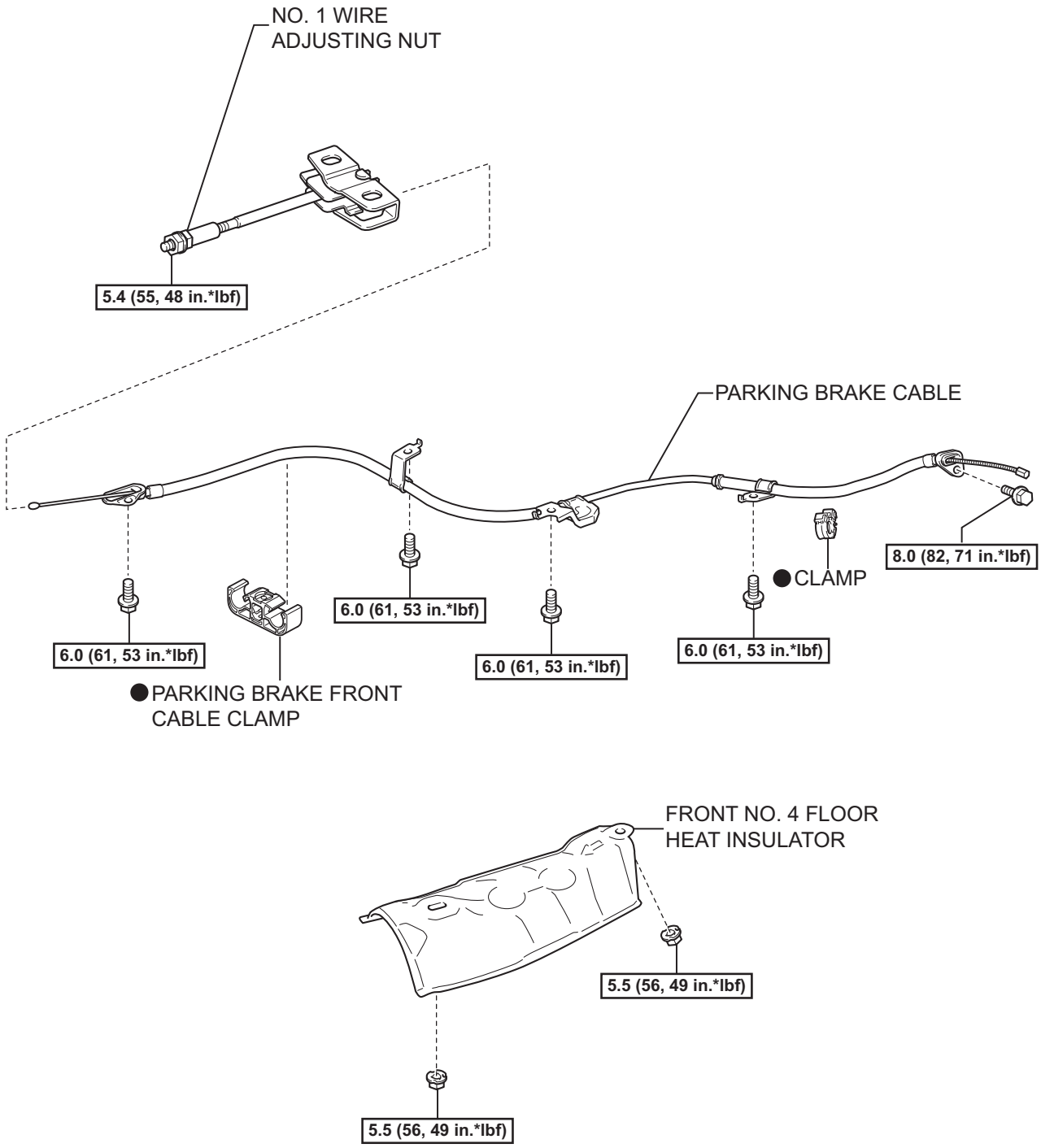

N*m (kgf*cm, ft*lbf) : Specified torque

● Non-reusable part

Y

C126199E02

REMOVAL

1. **REMOVE CENTER LOWER INSTRUMENT PANEL FINISH PANEL (for Sedan) (See page PB-6)**
2. **REMOVE SHIFT LEVER KNOB SUB-ASSEMBLY (for Manual Transaxle)**
3. **REMOVE SHIFTING HOLE COVER SUB-ASSEMBLY (for Hatchback Manual Transaxle) (See page PB-6)**
4. **REMOVE UPPER CONSOLE PANEL SUB-ASSEMBLY (for Sedan) (See page PB-6)**
5. **REMOVE REAR CONSOLE BOX COVER (for Hatchback) (See page PB-6)**
6. **REMOVE REAR UPPER CONSOLE PANEL SUB-ASSEMBLY (for Sedan) (See page PB-7)**
7. **REMOVE CONSOLE BOX CARPET (See page PB-7)**
8. **REMOVE REAR CONSOLE BOX ASSEMBLY (See page PB-8)**
9. **REMOVE REAR WHEEL**
10. **REMOVE REAR BRAKE DRUM SUB-ASSEMBLY (See page BR-60)**
11. **REMOVE REAR BRAKE SHOE KIT (See page BR-60)**
12. **REMOVE FRONT NO. 4 FLOOR HEAT INSULATOR**
    (a) Remove the 2 nuts and remove the heat insulator.
13. **LOOSEN NO. 1 WIRE ADJUSTING NUT (See page PB-8)**
14. **REMOVE PARKING BRAKE CABLE**
    (a) Disconnect the cable end from the equalizer.
    (b) Remove cable clamp A from the body.
    (c) Remove the 4 bolts.

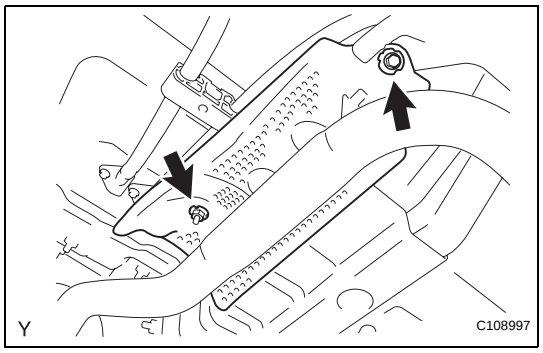

(d) Using pliers, pinch both ends of the claw of cable clamp B and flex the clamp to remove it.

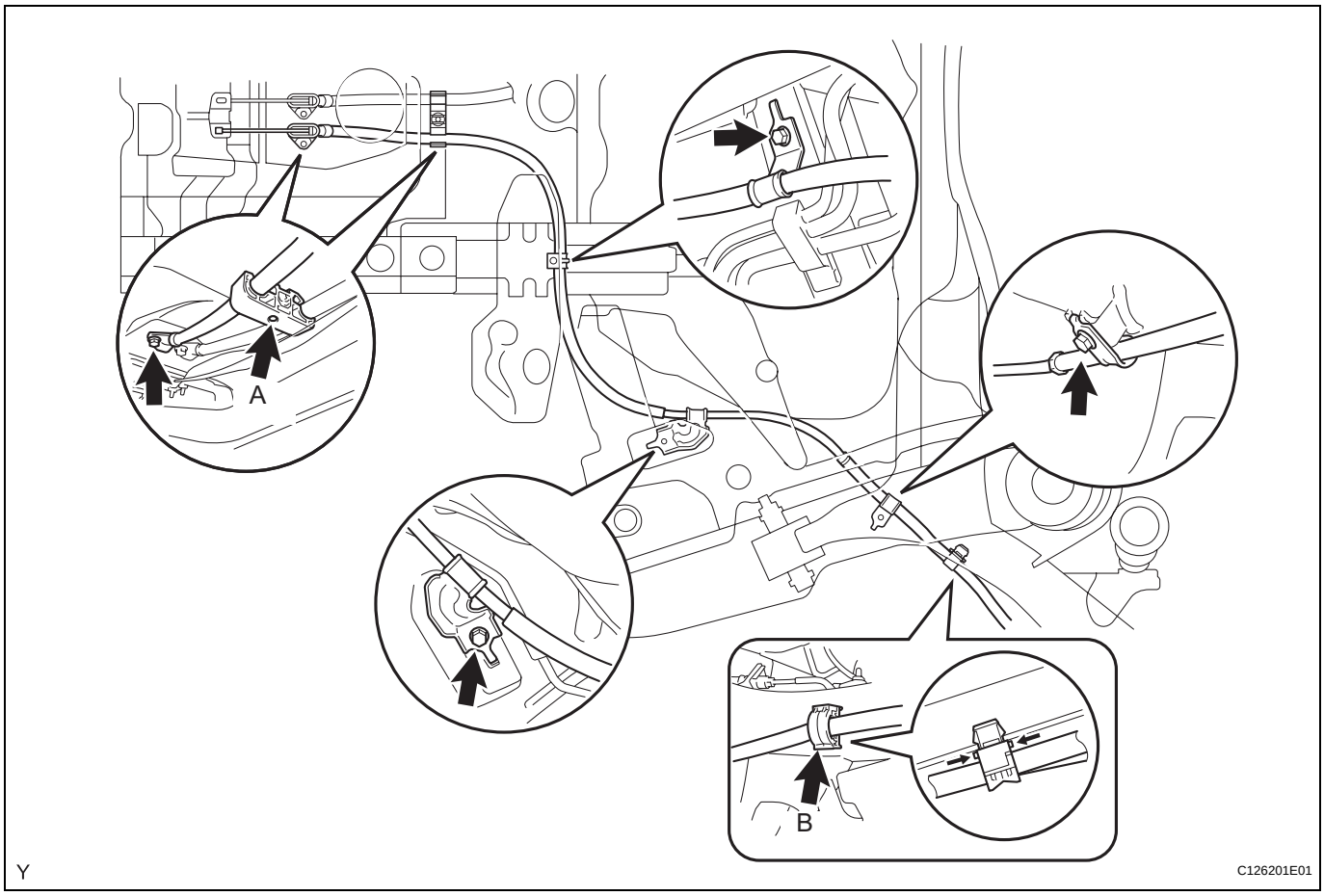

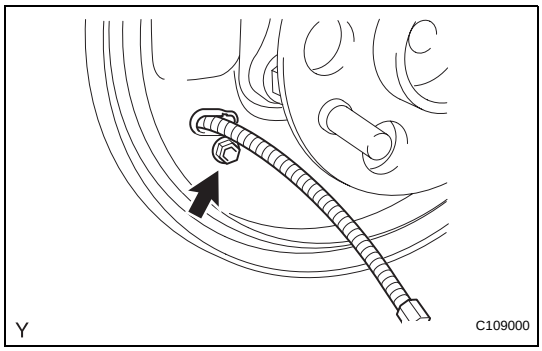

(e) Remove the bolt and remove the parking brake cable from the backing plate.

(f) Remove the cable clamp B from the parking brake cable.
HINT:
Replace the cable clamp B with a new one when installing the parking brake cable.

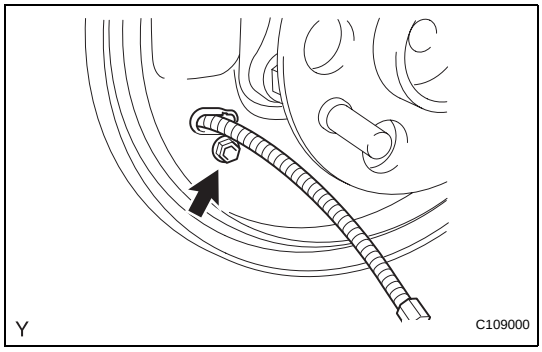

INSTALLATION

1. INSTALL PARKING BRAKE CABLE

(a) Install the parking brake cable onto the backing plate with the bolt.
Torque: 8.0 N*m (82 kgf*cm, 71 in.*lbf)

(b) Install a new cable clamp B onto the rear axle beam.
NOTICE:
Securely install the clamp.

(c) Tighten the 4 bolts.
Torque: 6.0 N*m (61 kgf*cm, 53 in.*lbf)

(d) Pass the parking brake cable through a new cable clamp A, and then install cable clamp A onto the stud bolt.
NOTICE:
Securely install the clamp.

(e) Connect the cable end to the equalizer.

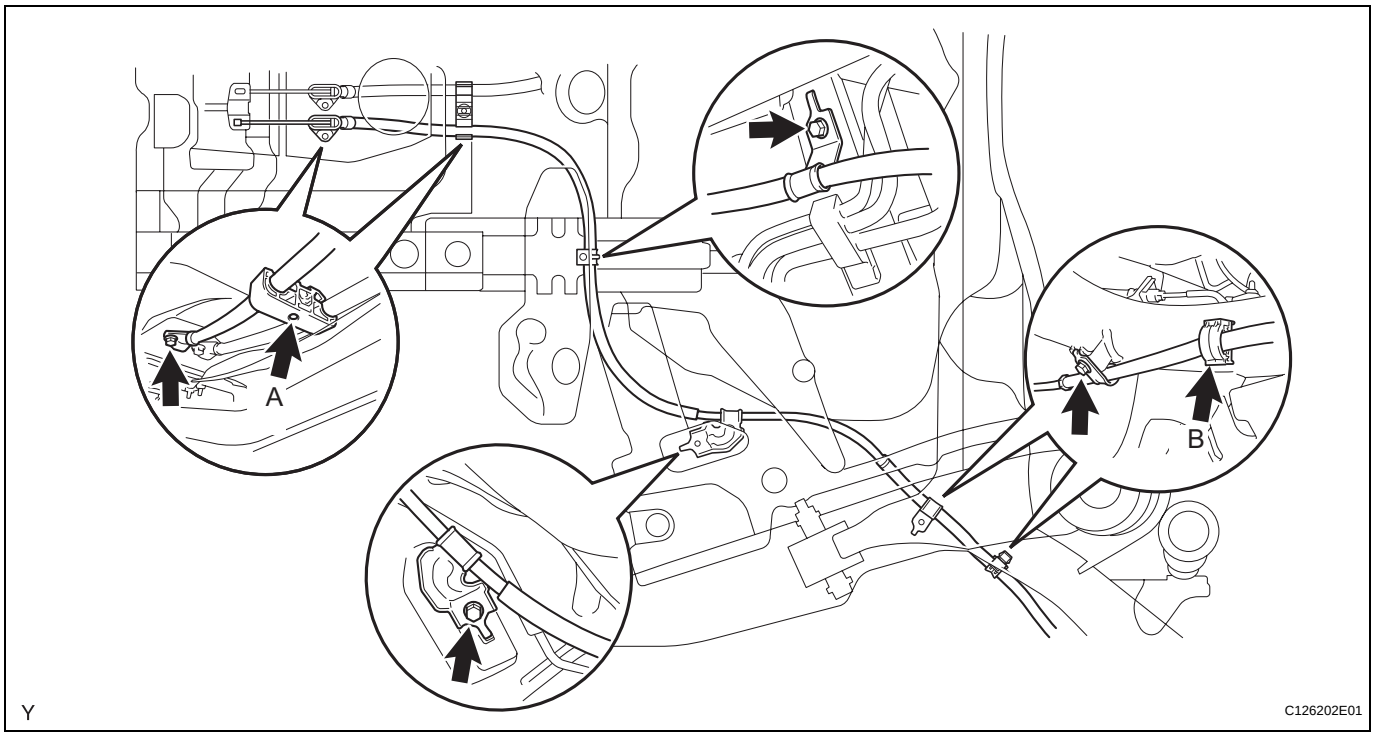

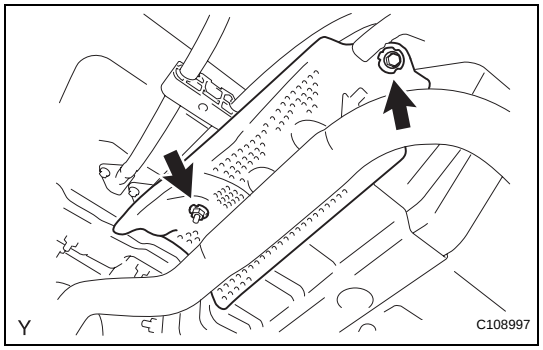

2. **INSTALL FRONT NO. 4 FLOOR HEAT INSULATOR**
   (a) Install the heat insulator with the 2 nuts.
   Torque: 5.5 N*m (56 kgf*cm, 49 in.*lbf)
3. **INSTALL REAR BRAKE SHOE KIT (See page BR-64)**
4. **CHECK REAR DRUM BRAKE INSTALLATION (See page BR-66)**
5. **INSTALL REAR BRAKE DRUM SUB-ASSEMBLY**
6. **ADJUST REAR DRUM BRAKE SHOE CLEARANCE (See page BR-67)**
7. **INSTALL REAR WHEEL**
   Torque: 103 N*m (1,050 kgf*cm, 76 ft.*lbf)
8. **INSPECT PARKING BRAKE LEVER TRAVEL (See page PB-1)**
9. **ADJUST PARKING BRAKE LEVER TRAVEL (See page PB-2)**
10. **INSTALL REAR CONSOLE BOX ASSEMBLY (See page PB-10)**
11. **INSTALL CONSOLE BOX CARPET (See page PB-11)**
12. **INSTALL REAR CONSOLE BOX COVER (for Hatchback) (See page PB-11)**

13. **INSTALL REAR UPPER CONSOLE PANEL SUB-ASSEMBLY (for Sedan) (See page PB-11)**
14. **INSTALL SHIFTING HOLE COVER SUB-ASSEMBLY (for Hatchback Manual Transaxle) (See page PB-12)**
15. **INSTALL UPPER CONSOLE PANEL SUB-ASSEMBLY (for Sedan) (See page PB-12)**
16. **INSTALL SHIFT LEVER KNOB SUB-ASSEMBLY (for Manual Transaxle)**
17. **INSTALL CENTER LOWER INSTRUMENT PANEL FINISH PANEL (for Sedan) (See page PB-12)**

PARKING BRAKE SWITCH

COMPONENTS

for Hatchback:

for Manual Transaxle:

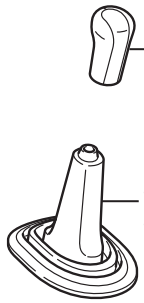

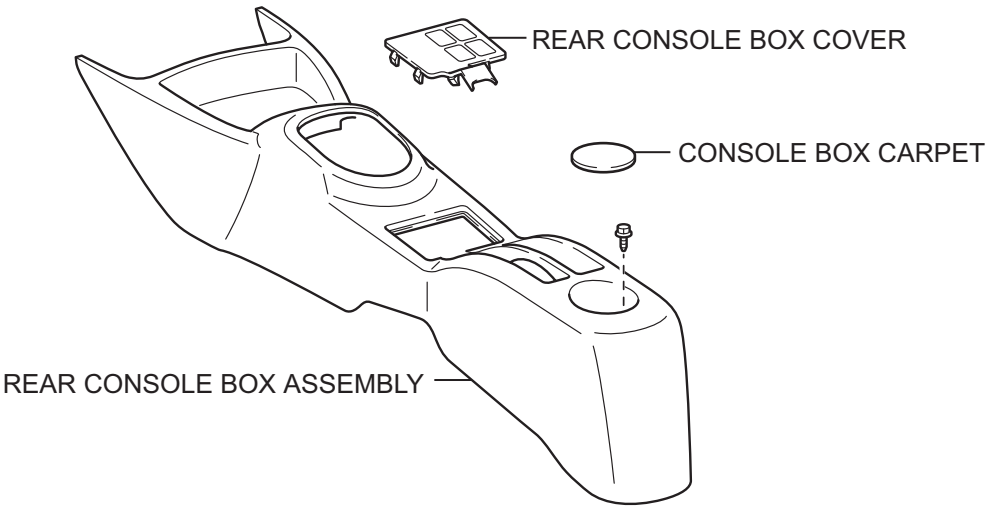

T

C133142E01

for Sedan:

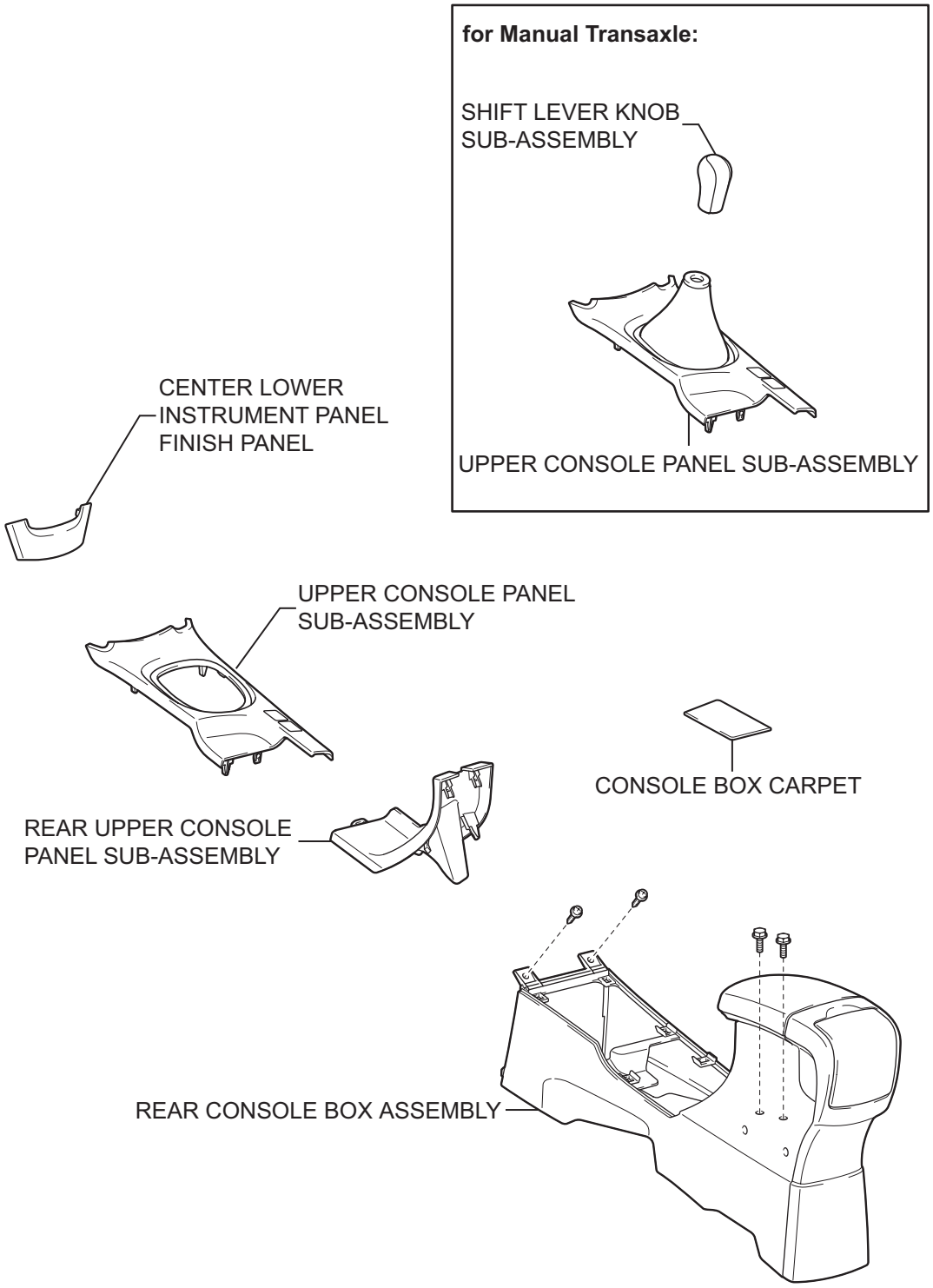

P

B132385E02

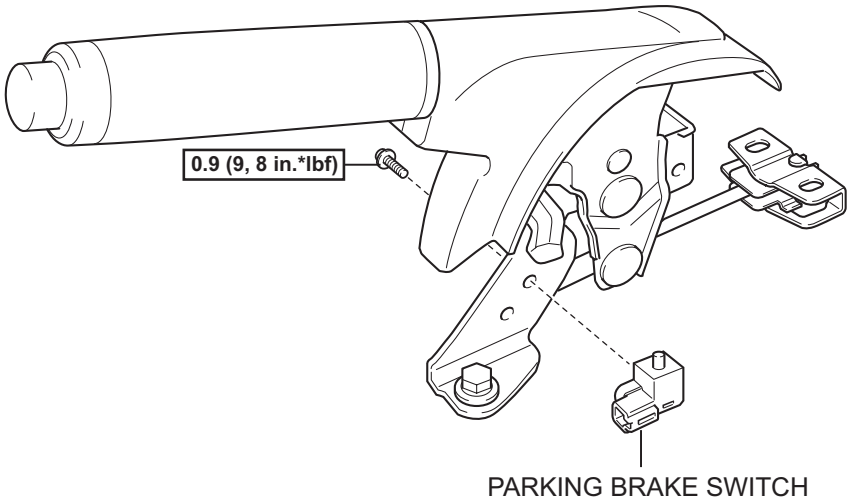

N*m (kgf*cm, ft*lbf) :Specified torque

Y

C110336E01

REMOVAL

1. **DISCONNECT CABLE FROM NEGATIVE BATTERY TERMINAL**
2. **REMOVE CENTER LOWER INSTRUMENT PANEL FINISH PANEL (for Sedan) (See page PB-6)**
3. **REMOVE SHIFT LEVER KNOB SUB-ASSEMBLY (for Manual Transaxle)**
4. **REMOVE SHIFTING HOLE COVER SUB-ASSEMBLY (for Hatchback Manual Transaxle) (See page PB-6)**
5. **REMOVE UPPER CONSOLE PANEL SUB-ASSEMBLY (for Sedan) (See page PB-6)**
6. **REMOVE REAR CONSOLE BOX COVER (for Hatchback) (See page PB-6)**
7. **REMOVE REAR UPPER CONSOLE PANEL SUB-ASSEMBLY (for Sedan) (See page PB-7)**
8. **REMOVE CONSOLE BOX CARPET (See page PB-7)**
9. **REMOVE REAR CONSOLE BOX ASSEMBLY (See page PB-8)**
10. **REMOVE PARKING BRAKE SWITCH**
    (a) Disconnect the parking brake switch connector.
    (b) Remove the screw and remove the parking brake switch.

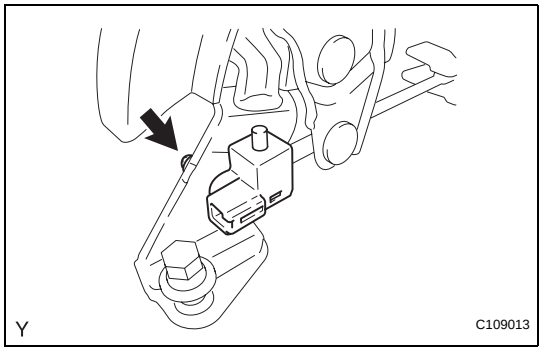

INSPECTION

1. **INSPECT PARKING BRAKE SWITCH**
   (a) Check the resistance.
   (1) Using an ohmmeter, measure the resistance between the terminals.

Standard resistance

Tester Connection	Switch Condition	Specified Condition
1 - Ground	Released	Below 1 Ω
1 - Ground	Pushed in	10 kΩ or higher

If the result is not as specified, replace the parking brake switch.

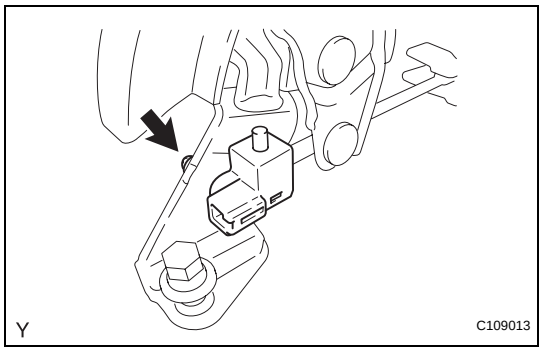

INSTALLATION

1. **INSTALL PARKING BRAKE SWITCH**
   (a) Install the parking brake switch with the screw.
   Torque: 0.9 N*m (9 kgf*cm, 8 in.*lbf)
   (b) Connect the parking brake switch connector.
2. **INSTALL REAR CONSOLE BOX ASSEMBLY (See page PB-10)**
3. **INSTALL CONSOLE BOX CARPET (See page PB-11)**
4. **INSTALL REAR CONSOLE BOX COVER (for Hatchback) (See page PB-11)**
5. **INSTALL REAR UPPER CONSOLE PANEL SUB-ASSEMBLY (for Sedan) (See page PB-11)**
6. **INSTALL SHIFTING HOLE COVER SUB-ASSEMBLY (for Hatchback Manual Transaxle) (See page PB-12)**
7. **INSTALL UPPER CONSOLE PANEL SUB-ASSEMBLY (for Sedan) (See page PB-12)**
8. **INSTALL SHIFT LEVER KNOB SUB-ASSEMBLY (for Manual Transaxle)**
9. **INSTALL CENTER LOWER INSTRUMENT PANEL FINISH PANEL (for Sedan) (See page PB-12)**
10. **CONNECT CABLE TO NEGATIVE BATTERY TERMINAL**
    Torque: 5.4 N*m (55 kgf*cm, 48 in.*lbf)