HYUNDAI

2003 Owner's Manual

Tiburon

DRIVING IS BELIEVING

A010A02A-AAT

WARRANTIES FOR YOUR HYUNDAI VEHICLE

- o New Vehicle 60 Months/60,000 Miles Limited Warranty
- o New Vehicle 120 Months/100,000 Miles Limited Powertrain Warranty (first owner only)
- o Anti-Perforation Limited Warranty
- o Emission Defect Warranty - Federal Vehicle
- o California Emission Control System Warranty (if applicable)
- o Emission Performance Warranty - Federal Vehicle
- o Replacement Parts and Accessories Limited Warranty

NOTE:
Detailed warranty information is provided in your Hyundai Owner's Handbook.

A020A01A-AAT

RESPONSIBILITY FOR MAINTENANCE

The maintenance requirements for your new Hyundai are found in Section 5. As the owner, it is your responsibility to see that all maintenance operations specified by the manufacturer are carried out at the appropriate intervals. When the vehicle is used in severe driving conditions, more frequent maintenance is required for some operations. Maintenance requirements for severe operating conditions are also included in Section 5.

HYUNDAI

Tiburon

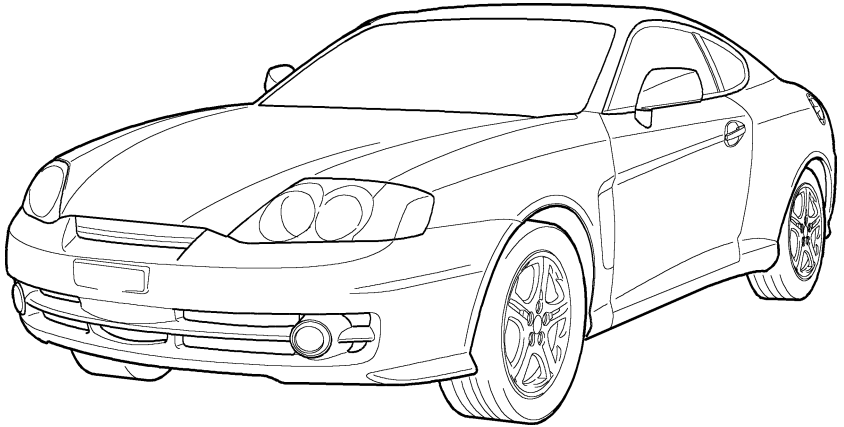

HGK037

OWNER'S MANUAL

A030A05F-AAT

Operation
Maintenance
Specifications

All information in this Owner's Manual is current at the time of publication. However, Hyundai reserves the right to make changes at any time so that our policy of continual product improvement may be carried out.

This manual applies to all Hyundai Tiburon models and includes descriptions and explanations of optional as well as standard equipment. As a result, you may find material in this manual that does not apply to your specific vehicle.

A040A01A-AAT

FOREWORD

Thank you for choosing Hyundai. We are pleased to welcome you to the growing number of discriminating people who drive Hyundais. The advanced engineering and high-quality construction of each Hyundai we build is something of which we're very proud.

Your Owner's Manual will introduce you to the features and operation of your new Hyundai. It is suggested that you read it carefully since the information it contains can contribute greatly to the satisfaction you receive from your new car.

The manufacturer also recommends that all service and maintenance on your car be performed by an authorized Hyundai dealer. Hyundai dealers are prepared to provide high-quality service, maintenance and any other assistance that may be required.

A050A04A-AAT

HYUNDAI MOTOR COMPANY

Note: Because future owners will also need the information included in this manual, if you sell this Hyundai, please leave the manual in the vehicle for their use. Thank you.

CAUTION: Severe engine and transaxle damage may result from the use of poor quality fuels and lubricants that do not meet Hyundai specifications. You must always use high quality fuels and lubricants that meet the specifications listed on Page 9-3 in the Vehicle Specifications section of the Owner's Manual and which also appear in the Service Station Information on the back cover of the Owner's Manual.

Copyright 2002 Hyundai Motor Company. All rights reserved. No part of this publication may be reproduced, stored in any retrieval system or transmitted in any form or by any means without the prior written permission of Hyundai Motor Company.

A070A01A-AAT

CAUTION: MODIFICATIONS TO YOUR HYUNDAI

Your Hyundai should not be modified in any way. Such modifications may adversely affect the performance, safety or durability of your Hyundai and may, in addition, violate conditions of the limited warranties covering the vehicle. Certain modifications may also be in violation of regulations established by the U.S. Department of Transportation and other federal or state agencies.

A080A01S-AAT

TWO-WAY RADIO OR CELLULAR TELEPHONE INSTALLATION

Your vehicle is equipped with electronic fuel injection and other electronic components. It is possible for an improperly installed/adjusted two-way radio or cellular telephone to adversely affect electronic systems. For this reason, we recommend that you carefully follow the radio manufacturer's instructions or consult your Hyundai dealer for precautionary measures or special instructions if you choose to install one of these devices.

A090A01A-AAT

SAFETY AND VEHICLE DAMAGE WARNING

This manual includes information titled as WARNING, CAUTION and NOTE.
These titles indicate the following:

WARNING:
This indicates that a condition may result in harm, serious injury or death to you or other persons if the warning is not heeded. Follow the advice provided with the warning.

CAUTION:
This indicates that a condition may result in damage to your vehicle or its equipment if the caution is not heeded. Follow the advice provided with the caution.

NOTE:
This indicates that interesting or helpful information is being provided.

A100A03A-AAT

GUIDE TO HYUNDAI GENUINE PARTS

1. **What are Hyundai Genuine Parts?**
   Hyundai Genuine Parts are the same parts used by Hyundai Motor Company to manufacture vehicles. They are designed and tested for the optimum safety, performance, and reliability to our customers.

2. **Why should you use genuine parts?**
   Hyundai Genuine Parts are engineered and built to meet rigid original manufacturing requirements. Using imitation, counterfeit or used salvage parts is not covered under the Hyundai New Vehicle Limited Warranty or any other Hyundai warranty. In addition, any damage to or failure of Genuine Hyundai Parts caused by the installation or failure of an imitation, counterfeit or used salvage part is not covered by any Hyundai Warranty.

3. **How can you tell if you are purchasing Hyundai Genuine Parts?**
   Look for the Hyundai Genuine Parts Logo on the package (see below).

   Hyndai Genuine Parts exported to the United States are packaged with labels written only in English.

   Hyundai Genuine Parts are only sold through authorized Hyundai Dealerships.

" To find the closest authorized dealer call 1-800-826-CARS "

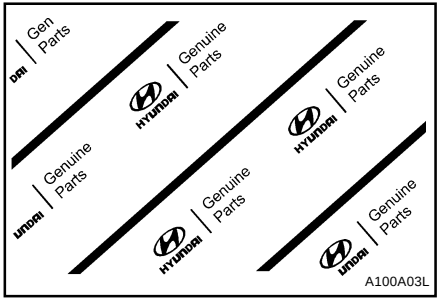

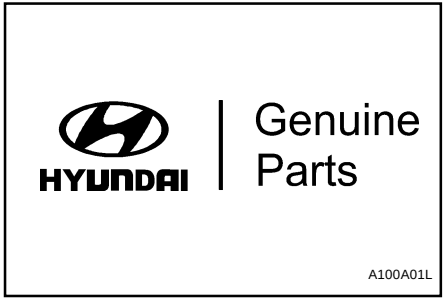

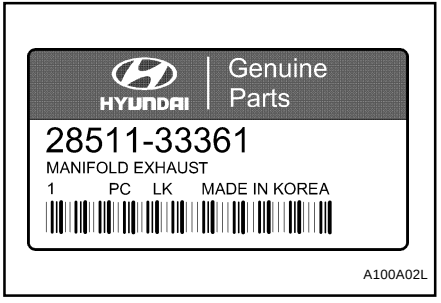

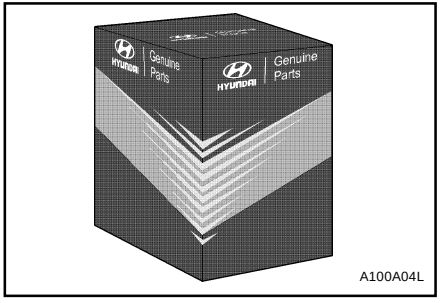

TABLE OF CONTENTS

SECTION		PAGE
1.	FEATURES OF YOUR HYUNDAI	1-1
2.	DRIVING YOUR HYUNDAI	2-1
3.	WHAT TO DO IN AN EMERGENCY	3-1
4.	CORROSION PREVENTION & APPEARANCE CARE	4-1
5.	VEHICLE MAINTENANCE REQUIREMENTS	5-1
6.	DO-IT-YOURSELF MAINTENANCE	6-1
7.	EMISSION CONTROL SYSTEMS	7-1
8.	CONSUMER INFORMATION & REPORTING SAFETY DEFECTS	8-1
9.	VEHICLE SPECIFICATIONS	9-1
10.	INDEX	10-1

A000A01A-AAT

This Owner's Manual should be considered a part of the car and remain with it when it is sold for the use of the next owner.

ONWER'S I.D.

ORIGINAL OWNER _____

ADDRESS _____

CITY _____ STATE _____ ZIP CODE _____

DELIVERY DATE

(Date Sold to Original Retail purchaser)

DEALER NAME _____ DEALER NO. _____

ADDRESS _____

CITY _____ STATE _____ ZIP CODE _____

1. FEATURES OF YOUR HYUNDAI

B010A03A-AAT

FUEL RECOMMENDATIONS

Use Unleaded Gasoline

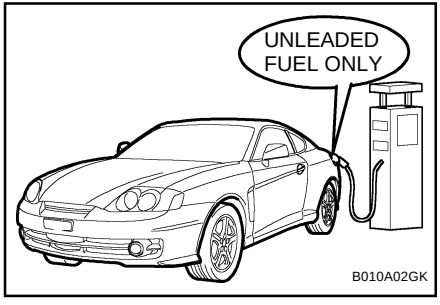

Unleaded gasoline with a Pump Octane Rating of 87 (Research Octane Number 91) or higher must be used in your Hyundai.

If leaded gasoline is used, it will cause the catalytic converter to become ineffective and the emission control system to malfunction. This can also result in increased maintenance expense.

To avoid accidental use of leaded fuel, the larger nozzle used with leaded gasoline at service stations cannot be inserted into the fuel tank opening of your Hyundai.

WARNING:

- **Do not "TOP-OFF" after the first nozzle shut off when refueling.**
- **The fuel cap must be tightened at least 3 clicks, otherwise "CHECK" light may illuminate.**

B010B01A-AAT

What About Gasohol?

Gasohol (a mixture of 90% unleaded gasoline and 10% ethanol or grain alcohol) may be used in your Hyundai. However, if your engine develops driveability problems, the use of 100% unleaded gasoline is recommended. Fuels with unspecified quantities of alcohol, or alcohols other than ethanol, should not be used.

B010D01A-AAT

Do Not Use Methanol

Fuels containing methanol (wood alcohol) should not be used in your Hyundai. This type of fuel can reduce vehicle performance and damage components of the fuel system.

CAUTION:

Your Hyundai's New Vehicle Limited Warranty may not cover damage to the fuel system and any performance problems that are caused by the use of fuels containing methanol or fuels containing MTBE (Methyl Tertiary Butyl Ether) over 15.0% vol. (Oxygen Content 2.7% weight.)

B010F01A-AAT

Operation in Foreign Countries

If you are going to drive your Hyundai in another country, be sure to:

- Observe all regulations regarding registration and insurance.
- Determine that acceptable fuel is available.

B010E01A-AAT

Gasolines for Cleaner Air

To help contribute to cleaner air, Hyundai recommends that you use gasolines treated with detergent additives, which help prevent deposit formation in the engine. These gasolines will help the engine run cleaner and the Emission Control System performance.

B010C01A-AAT

Use of MTBE

Hyundai recommends that fuels containing MTBE (Methyl Tertiary Butyl Ether) over 15.0% vol. (Oxygen Content 2.7% weight) should not be used in your Hyundai.
Fuel containing MTBE over 15.0% vol. (Oxygen Content 2.7% weight) may reduce vehicle performance and produce vapor lock or hard starting.

B020A01S-AAT

BREAKING IN YOUR NEW HYUNDAI

During the First 1,200 Miles (2,000 Km)

No formal “break-in” procedure is required with your new Hyundai. However, you can contribute to the economical operation and durability of your Hyundai by observing the following recommendations during the first 1,200 miles (2,000 km).

- o Don't drive faster than 55 MPH (88 km/h).
- o While driving, keep your engine speed (rpm, or revolutions per minute) between 2,000 rpm and 4,000 rpm.
- o Use moderate acceleration. Don't start quickly or depress the accelerator pedal fully.
- o For the first 200 miles (300 km), try to avoid hard stops.
- o Don't lug the engine (in other words, don't drive so slowly in too high a gear that the engine "bucks"-shift to a lower gear).
- o Whether going fast or slow, vary your speed from time to time.
- o Don't let the engine idle longer than 3 minutes at one time.
- o Don't tow a trailer during the first 1,200 miles (2,000 km) of operation.

B030A01A-AAT

KEYS

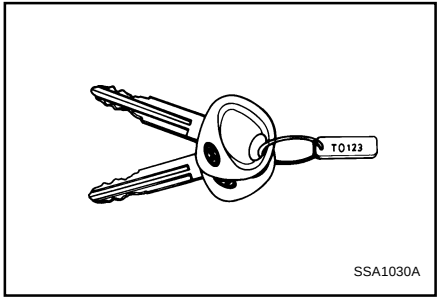

For greater convenience, the same key operates all the locks in your Hyundai. However, because the doors can be locked without a key, carrying a spare key is recommended in case you accidentally lock one key inside the car.

B030B01S-AAT

Record Your Key Number

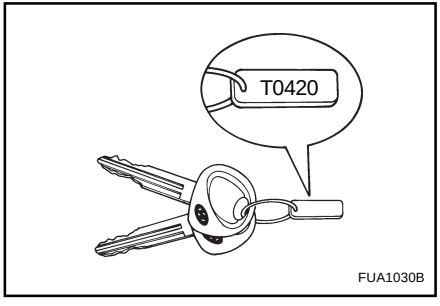

A code number is stamped on the key number plate that came with the keys to your Hyundai. This key number plate should be kept in a safe place, not in the vehicle. The key number should also be recorded in a place where it can be found in an emergency.

If you need additional keys, or if you should lose your keys, your authorized Hyundai dealer can make new keys if you can supply the key number.

B040A01A-AAT

DOOR LOCKS

WARNING:

- **o Unlocked doors can be dangerous. Before you drive away (especially if there are children in the car), be sure that all the doors are securely closed and locked so that the doors cannot be inadvertently opened from the inside. This helps assure that doors will not be opened accidentally. Also, when combined with the proper use of seat belts, locking the doors helps keep occupants from being ejected from the car in case of an accident.**
- **o Before opening the door, always look for and avoid oncoming traffic.**

B040B01A-AAT

Locking and unlocking front doors with a key

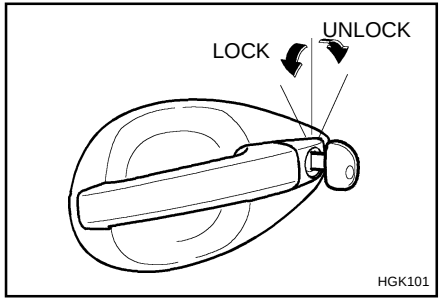

- o The door can be locked or unlocked with a key.
- o Lock the door by turning the key toward the front of the vehicle and unlock it by turning the key toward the rear.

B040C01S-AAT

Locking From the Outside

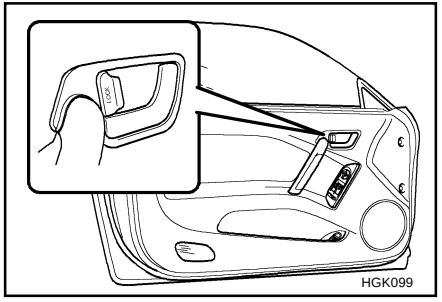

The doors can be locked without a key.
To lock the doors from the outside, first push the inside lock switch to the “LOCK” position, so that the red mark on the switch is not visible, then close the door.

NOTE:

- **o When locking the door this way, be careful not to lock the door with the ignition key left in the vehicle.**
- **o To protect against theft, always remove the ignition key, close all windows, and lock all doors when leaving your vehicle unattended.**

B040D01GK-AAT

Locking From the Inside

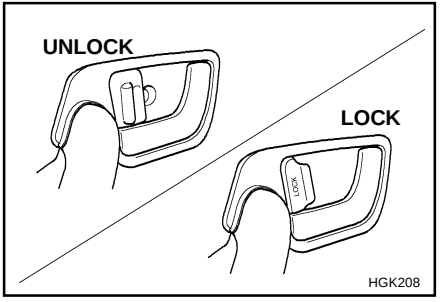

- o To lock the doors from the inside, simply close the door and push the lock switch to the "LOCK" position. When this is done, neither the outside nor the inside door handle can be used.
- o The driver's door can be opened by pulling the inside door handle even if the lock switch is depressed.

NOTE:

When the door is locked, the red mark on the switch is not visible.

B040G01GK-GAT

Central Door Lock

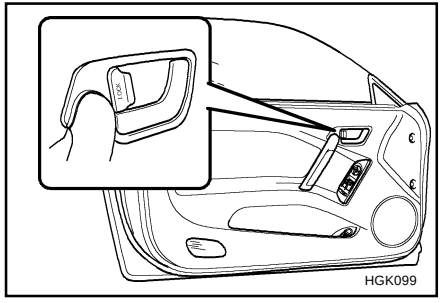

HGK099

The central door locking is operated by pushing the driver's door lock switch toward the front or rear of the vehicle. If the passenger door is open when the switch is pushed, the door will remain locked when closed.

NOTE:

- **When pushing the switch toward the rear, all doors will unlock.**
  When pushing the switch toward the front, all doors will lock.
- **When the door is unlocked, the red mark on the switch is visible.**
- **The central door locking is operated by turning the key (driver's door only) toward the front or rear of the vehicle.**

B070A01A-AAT

THEFT-ALARM SYSTEM (If Installed)

This system is designed to provide protection from unauthorized entry into the car. This system is operated in three stages: the first is the "Armed" stage, the second is the "Alarm" stage, and the third is the "Disarmed" stage. If triggered, the system provides an audible alarm with blinking of the turn signal light.

B070B02GK-AAT

Armed Stage

Park the car and stop the engine. Arm the system as described below.

1) Remove the ignition key from the ignition switch.
2) Make sure that the engine hood and tail gate are locked.
3) Lock the doors using the transmitter of the keyless entry system.

After completion of the steps above, the turn signal lamp will blink once to indicate that the system is armed.

NOTE:

1) **If any door, tail gate or engine hood remains open, the system will not be armed.**
2) **If this happens, rearm the system as described above.**
3) **Once the system is armed, only the tail gate may be unlocked using the key without disarming the system.**
4) **When unlocking all doors by the transmitter, if you don't open any doors within 30 seconds after all doors are unlocked by the transmitter, all doors are relocked and the system is rearmed automatically.**

CAUTION:

Do not arm the system until all passengers have left the car. If the system is armed while a passenger(s) remains in the car, the alarm may be activated when the remaining passenger(s) leaves the car.

B070C01GK-AAT

Alarm Stage

The alarm will be activated if any of the following occur while the car is parked and the system is armed.

1) A front door is opened without using the key or the transmitter.
2) The tail gate is opened without using the key.
3) The engine hood is opened.

The siren will sound and the turn signal lamp will blink continuously for 30 seconds. (This happens 3 times). To turn off the system, unlock the door with the transmitter.

CAUTION:

Avoid trying to start the engine while the system is armed.

B070D02GK-AAT

Disarmed Stage

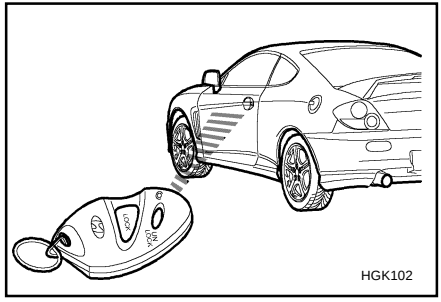

The system will be disarmed when either of the following steps are taken:

1) The driver's or passenger's door is unlocked by depressing the "UNLOCK" button on the transmitter.
2) In the middle of arming or after being armed, it disarms after 30 seconds if the key is turned to and kept in the "ON" position.

After completing the steps above, the turn signal lamp will blink twice to indicate that the system is disarmed.

NOTE:

Once the system has been disarmed, it can not be rearmed except by repeating the arming procedures.

B070E02GK-GAT

Replacing the battery

When the transmitter's battery begins to get weak, it may take several pushes on the button to lock or unlock the doors, and the LED will not light. Replace the battery as soon as possible.

Battery type : CR2032

Replacement instructions:

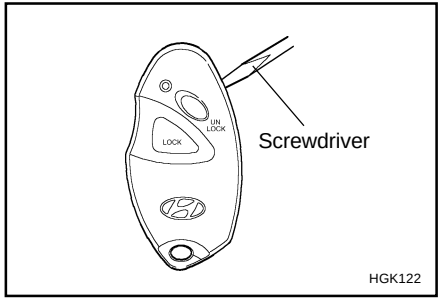

1. Separate the case with a blade screwdriver as shown in the illustration.

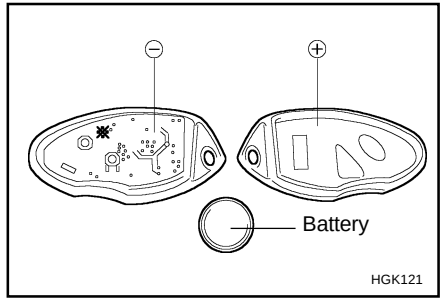

2. Remove the old battery from the case and note the polarity. Make sure the polarity of the new battery is the same(+side facing down), then insert it in the transmitter.

NOTE:

Install a new battery within 30 seconds after removing the old one. If installing a new battery takes more than 30 seconds, take the following steps.

1) Turn the ignition key to the "ACC" position.
2) Make sure that the turn signal lamps blink once by pushing the "LOCK" or "UNLOCK" button on the transmitter.

B050A01GK-AAT

WINDOW GLASS

Power Window

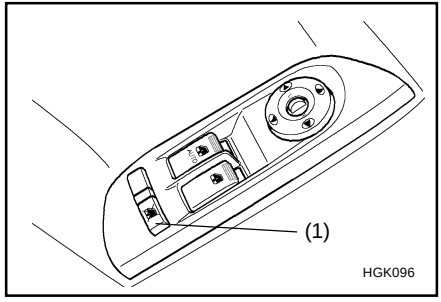

The power windows operate only when the ignition key is in the "ON" position. The main switches are located on the driver's arm rest and control the front windows on the respective sides of the vehicle. The windows may be opened by depressing the front portion of the switch. To stop at the desired opening, release the switch. The window may be closed by pulling the front portion of the switch. In order to prevent operation of the passenger front window by the passenger, a window lock switch (1) is provided on the arm rest of the driver's door. To disable the passenger's power window, push the window lock switch. To revert to normal operation, push in on the window lock switch again.

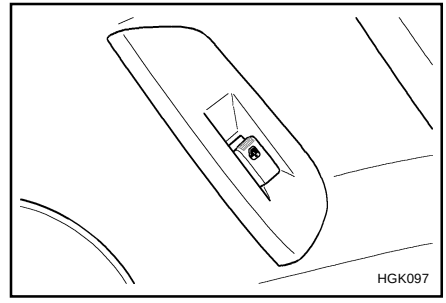

CAUTION:

Never try to operate the main switch and sub-switch in opposing directions at the same time. If this is done, the window will stop and cannot be opened or closed.

Auto-Down Window (Driver's Side) (If Installed)

The Auto-Down window is moved to its fully open position by pushing the switch. To stop at the desired position push in on the switch again.

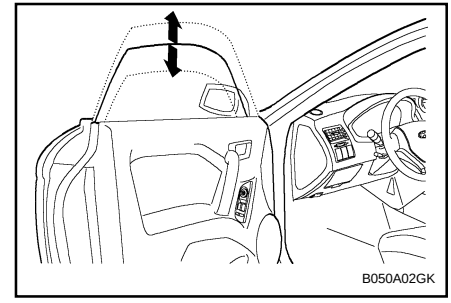

WARNING:

- **Be careful that head, hands and body are not trapped by a closing window.**
- **If passengers remain in the car when you leave, especially if a child remains alone, always remove the ignition key for their safety.**

B080A01A-AAT

ADJUSTABLE FRONT SEATS

WARNING:

Never attempt to adjust the seat while the vehicle is moving. This could result in loss of control, or an accident which may cause death, serious injury, or property damage.

B080B01A-AAT

Adjusting Seat Forward and Rearward

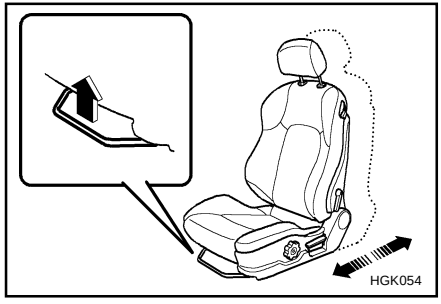

To move the seat toward the front or rear, pull the lock release lever upward. This will release the seat on its track so you can move it forward or rearward to the desired position. When you find the position you want, release the lever and slide the seat forward or rearward on its track until it locks into the desired position and cannot be moved further.

B080C01A-AAT

Adjusting Seatback Angle

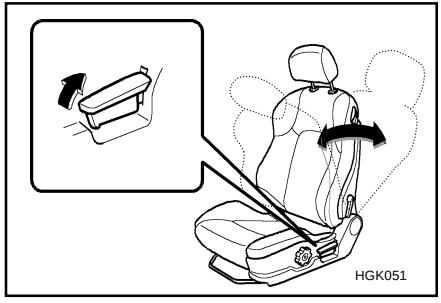

To recline the seatback, lean forward to take your weight off it, then pull up on the recliner control lever at the outside edge of the seat. Now lean back until the desired seatback angle is achieved. To lock the seatback into position, release the recliner control lever.

WARNING:

To minimize risk of severe injury in the event of a collision or a sudden stop, both the driver and passenger seatbacks should always be in an upright position while the vehicle is in motion. The protection provided by the seat belts and airbags may be reduced significantly when the seatbacks are reclined. There is greater risk that the driver and passenger will slide under the seatbelt which may result in serious injury if a crash occurs when the seatbacks are reclined. The seat belt cannot provide full protection to an occupant if the seat back is reclined.

B080D02A-AAT

Adjustable Headrests

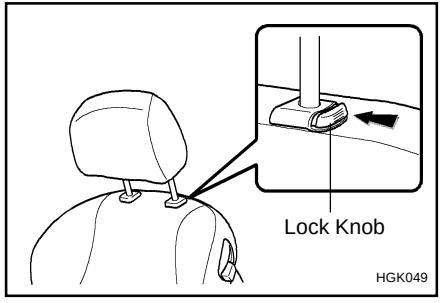

Headrests are designed to help reduce the risk of neck injuries.

To raise the headrest, pull it up. To lower it, push it down while pressing the lock knob.

WARNING:

- **For maximum effectiveness in case of an accident, the headrest should be adjusted so the top of the headrest is at the same height as the top of the occupant's ears. The use of a cushion that holds the body away from the seatback is not recommended.**

- **Do not operate the vehicle with the headrests removed as severe injury to an occupant may occur in the event of an accident. Headrests may provide protection against severe neck injuries when properly adjusted.**

B080E01F-AAT

Lumbar Support Control (Driver's seat only)

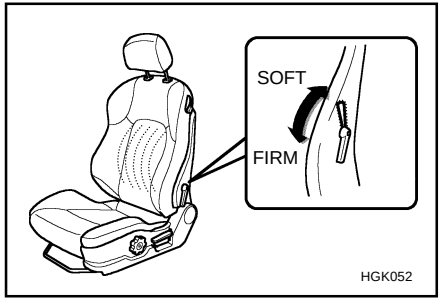

The driver's seat is equipped with adjustable lumbar support.
To increase the amount of lumbar support, pull the lever forward.
To decrease it, push the lever toward the rear.

B080F01F-AAT

Seat Cushion Height Adjustment (Driver's Seat Only) (If Installed)

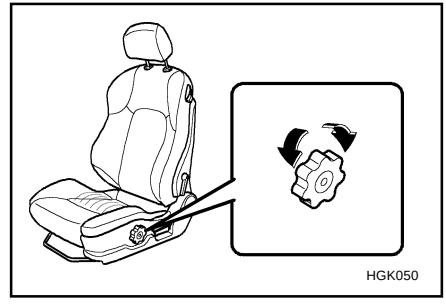

To raise or lower the front part of the seat cushion, turn the knob forward or rearward.

B129A01F-AAT

REAR SEAT POSITIONS

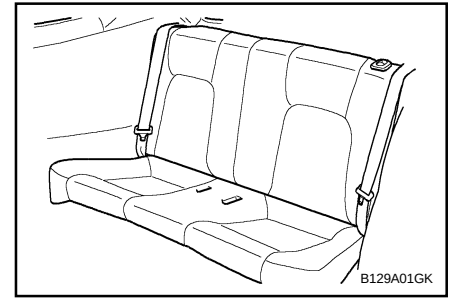

WARNING:
This vehicle contains two rear seating positions only and a seat belt for each seating position. Thus, never permit more than two occupants to ride in the rear seat because an unrestrained occupant could be seriously injured or killed in the event of a vehicle crash.

B130A02GK-GAT

REAR SEAT ENTRY (Walk in device)

The driver and front passenger's seatbacks should be tilted to enter the rear seat.

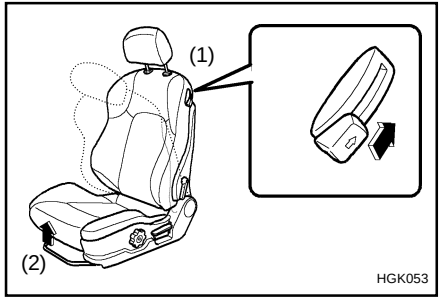

By pulling up the walk in device lever (1) at the left-upper side of the driver side seatback, the seatback will tilt forward. Then pull the lock release lever (2) up to move the seat forward.

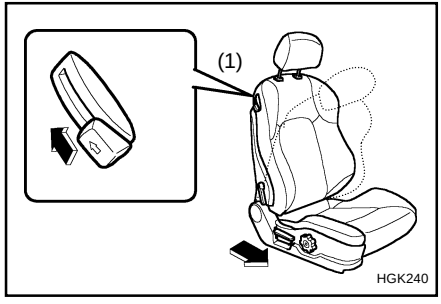

By pulling up the walk in device lever (1) at the right-upper side of the passenger side seatback, the seatback will tilt forward. Then push the seat forward to allow the occupants to enter.

Recliner Memory

By pulling up the walk in device lever (1) the seatback is reclined and returned to the original position.

WARNING:

Don't drive with the passenger side seatback reclined. It is dangerous to move it while driving. Be sure the seatback is latched firmly before driving.

B099A02F-AAT

BEFORE FOLDING THE REAR SEATS

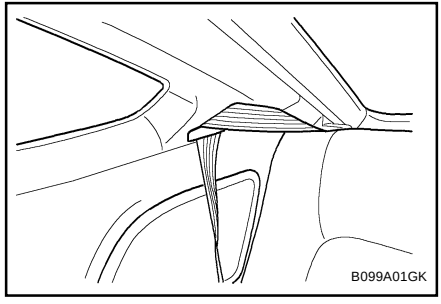

In order to prevent the shoulder belt from being damaged while folding the rear seat, the shoulder belt must be passed through the hanger to keep it out of the way.

CAUTION:

Seat belts must be removed from the hanger when in use.

B110A02S-AAT

FOLDING REAR SEATBACKS

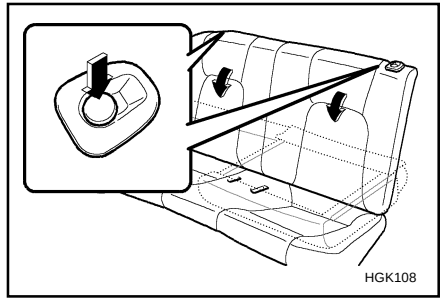

The rear seatbacks may be folded to facilitate carrying long items or to increase the luggage capacity of the vehicle.

- o To unlock the seatback, push the seatback locking button, then pull forward on the seatback panel.
- o When you return the seatback to its upright position, always be sure it has locked into position by pulling and pushing on the top of the seatback.

WARNING:
The purpose of the fold-down rear seatbacks is to allow you to carry longer objects than could otherwise be accommodated. Do not allow passengers to sit on top of the folded down seat back while the car is moving as this is not a proper seating position and no seat belts are available for use. This could result in injury in case of an accident or sudden stop. Objects carried on the folded down seatback should not extend higher than the top of the front seats. This could allow cargo to slide forward and cause injury or damage during sudden stops.

B150A01F-AAT

SEAT BELT PRECAUTIONS

WARNING:
All occupants of the vehicle must wear their seat belts at all times. Note that this vehicle is equipped with a Supplemental Restraint (Airbag) System as discussed beginning on page 1-18. The seat belts must be used in conjunction with the supplemental airbag system. State laws may require that some or all occupants of the vehicle use seat belts. The possibility of increased injury or severity of injury in an accident will be increased if this elementary safety precaution is not observed. In addition, the following recommendations are made:

B150B01F-AAT

Infant or Small Child

All 50 states have child restraint laws. You should be aware of the specific requirements in your state. Child and/or infant safety seats must be properly placed and installed in the **rear seat**. Information about the use of these restraints begins on page 1-14.

WARNING:
Every person in your vehicle needs to be properly restrained at all times, including infants and children. In a collision, an unrestrained child can become a "missile" inside the car. The force required to hold a child on your lap could be so great that you could not hold the child. Any child riding in the vehicle should always be in a proper restraint in the rear seat of the vehicle.

NOTE:
Small children are best protected from injury in an accident when properly restrained in the rear seat by a child restraint system that meets the requirements of the Federal Motor Vehicle Safety Standards. Before buying any child restraint system, make sure that it has a label certifying that it meets Motor Vehicle Safety Standard 213. The restraint must be appropriate for your child's height and weight. Check the label on the child restraint for this information. See page 1-14.

B150C02A-AAT

Larger Children

Children who are too large for child restraint systems should occupy the rear seat and use the available lap/shoulder belts. The lap portion should be fastened snug on the hips and as low as possible. Check belt fit periodically. A child's squirming could put the belt out of position. Children are afforded the most safety in the event of an accident when they are restrained by a proper restraint system in the rear seat. If a larger child (over age 13) must be seated in the front seat, the child should be securely restrained by the available lap/shoulder belt and the seat should be placed in the rearmost position. Children under the age of 13 should be restrained securely in the rear seat. NEVER place a rear facing child seat in the front seat of a vehicle.

B150D01A-AAT

Pregnant Women

The use of a seat belt is recommended for pregnant women to lessen the chance of injury in an accident. When a seat belt is used, the lap belt portion should be placed as low and snugly as possible on the hips, not across the abdomen. For specific recommendations, consult a physician.

B150E01A-AAT

Injured Person

A seat belt should be used when an injured person is being transported. When this is necessary, you should consult a physician for recommendations.

B150F01A-AAT

One Person Per Belt

Two people (including children) should never attempt to use a single seat belt. This could increase the severity of injuries in case of an accident.

B150G01A-AAT

Do Not Lie Down

To reduce the chance of injuries in the event of an accident, and to achieve maximum effectiveness of the restraint system, all passengers should be sitting up and the front seats should be in an upright position when the car is moving. A seat belt cannot provide proper protection if the person is lying down in the rear seat or if the front seat is in a reclined position.

WARNING:

Sitting in a reclined position or lying down when your vehicle is in motion can be dangerous. Even if you buckle up, your seat belts can't do their job when you're reclined. The shoulder belt can't do its job because it won't be against your body.
Instead, it will be in front of you. In a crash you could go into it with great force, receiving serious neck or other injuries.
The lap belt can't do its job either. In a crash the belt could go up over your abdomen. The belt forces would be applied there, not at your pelvic bones.
This could cause serious internal injuries.
For proper protection when the vehicle is in motion, have the seatback upright.
Then sit back in the seat and wear your seat belt properly. See page 1-12.

B160A01A-AAT

CARE OF SEAT BELTS

Seat belt systems should never be disassembled or modified. In addition, care should be taken to assure that seat belts and belt hardware are not damaged by seat hinges, doors or other abuse.

WARNING:

When you return the rear seatback to its upright position after the rear seatback was folded down, be careful not to damage the seat belt webbing or buckle. Be sure that the webbing or buckle does not get caught or pinched in the rear seat.

B160B01A-AAT

Periodic Inspection

It is recommended that all seat belts be inspected periodically for wear or damage of any kind. Parts of the system that are damaged should be replaced as soon as possible.

B160C01A-AAT

Keep Belts Clean and Dry

Seat belts should be kept clean and dry. If belts become dirty, they can be cleaned by using a mild soap solution and warm water. Bleach, dye, strong detergents or abrasives should not be used because they may damage and weaken the fabric.

B160D01A-AAT

When to Replace Seat Belts

Entire in-use seat belt assembly or assemblies should be replaced if the vehicle has been involved in an accident. This should be done even if no damage is visible. Additional questions concerning seat belt operation should be directed to your Hyundai Dealer.

B170A04A-AAT

HEIGHT ADJUSTABLE FRONT SEAT SHOULDER BELT (If installed)

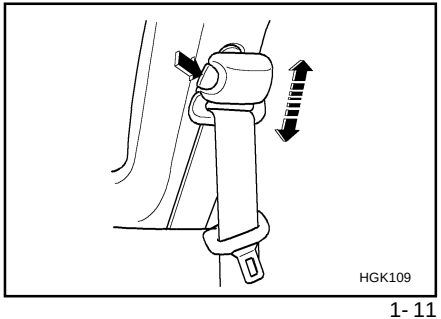

You can adjust the height of the shoulder belt anchor to one of the 4 positions.
If the height of the adjusting seat belt is too near your neck, you will not be getting the most effective protection. The shoulder portion should be adjusted so that it lies across your chest and midway over your shoulder nearest the door and not your neck.
To adjust the height of the seat belt anchor, lower or raise the height adjuster into an appropriate position. To raise the height adjuster, pull it up. To lower it, push it down while pressing the height adjuster button.
Release the button to lock the anchor into position. Try sliding the release button to make sure that it has locked into the position.

WARNING:

- **The height adjuster must be in the locked position when the vehicle is moving.**
- **The misadjustment of height of the shoulder belt could reduce the effectiveness of the seat belt in a crash.**

B180A01GK-AAT

SEAT BELT-Driver's and front passengers 3-Point System with Emergency Locking Retractor

To Fasten Your Belt

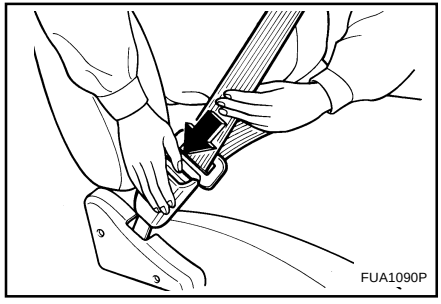

To fasten your seat belt, pull it out of the retractor and insert the metal tab into the buckle. There will be an audible "click" when the tab locks into the buckle.
The seat belt automatically adjusts to the proper length only after the lap belt portion is adjusted manually so that it fits snugly around your hips. If you lean forward in a slow, easy motion, the belt will extend and let you move around. If there is a sudden stop or impact, the belt will lock into position. It will also lock if you try to lean forward too quickly. Check to make sure that the belt is properly locked and that the belt is not twisted.

NOTE:

If the driver's seat belt is not fastened when the ignition key is in the "ON" position, the seat belt warning light will flash and the warning chime will sound for approximately six seconds.

B190A01GK-AAT

SEAT BELTS Rear Seat 3-Point System with Combination Locking Retractor

To Fasten Your Belt

Combination retractor type seat belts are installed in the rear seat positions to help accommodate the installation of child restraint systems. Although a combination retractor is also installed in the front passenger seat position, Hyundai strongly recommends that children always be seated in the **rear seat**. NEVER place any infant restraint system in the front seat of the vehicle.
This type of seat belt combines the features of both an emergency locking retractor seat belt and an automatic locking retractor seat belt. To fasten your seat belt, pull it out of the retractor and insert the metal tab into the buckle. There will be an audible "click" when the tab locks into the buckle. When not securing a child restraint, the seat belt operates in the same way as driver's seat belt (Emergency Locking Retractor Type). It automatically adjusts to the proper length only after the lap belt portion of the seat

belt is adjusted manually so that it fits snugly around your hips. When the seat belt is fully extended from the retractor to allow the installation of a child restraint system, the seat belt operation changes to allow the belt to retract, but not to extend. (Automatic Locking Retractor Type)

NOTE:

Although the combination retractor provides the same level of protection for seated passengers in either emergency or automatic locking modes, it is recommended that seated passengers use the emergency locking feature for improved convenience. The automatic locking function is intended to facilitate child restraint installation. To convert from the automatic locking feature to the emergency locking operation mode, allow the unbuckled seat belt to fully retract.

WARNING:

- **For maximum restraint system protection, seat belts must always be used whenever the car is moving.**
- **Seat belts are most effective when seatbacks are in the upright position.**
- **Children must always be seatbelted in the rear seats. Never allow children to ride in the front passenger seat.**
- **The shoulder belt should be positioned midway over the shoulder nearest the door for the most effective protection. Never wear the seat belt under the arm nearest the door. Wearing the belt under the arm nearest the door could cause serious or fatal injuries in an accident.**
- **Avoid wearing twisted seat belts. A twisted belt can't do its job as well. In a collision, it could even cut into you. Be sure the belt is straight and not twisted.**
- **Be careful not to damage the belt webbing or hardware. If the belt webbing or hardware is damaged, replace it.**

B200A01A-AAT

Adjusting Your Seat Belt

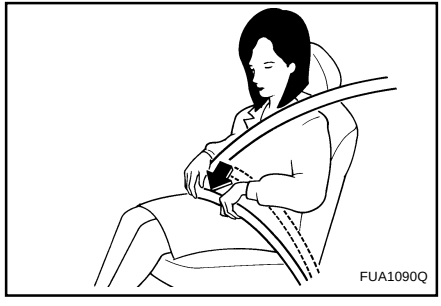

WARNING:

You should place the lap belt portion as low as possible and snugly across your hips, not on your waist. If the lap belt is located too high on your waist, it may increase the chance of injury in the event of a collision. Both arms should not be under or over the belt. Rather, one should be over and the other under, as shown in the illustration. Never wear the seat belt under the arm nearest the door.

B210A01A-AAT

To Release the Seat Belt

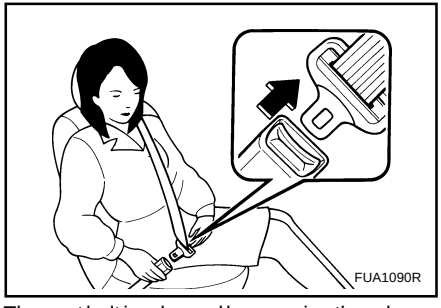

The seat belt is released by pressing the release button in the locking buckle. When it is released, the belt should automatically draw back into the retractor.

If this does not happen, check the belt to be sure it is not twisted, then try again.

B230A02A-AAT

CHILD RESTRAINT SYSTEM

Children riding in the car should sit in the rear seat and must always be properly restrained to minimize the risk of injury in an accident, sudden stop or sudden maneuver. According to accident statistics provided by the National Highway Traffic Safety Administration (NHTSA), children are safer when properly restrained in the rear seats than in the front seat. Larger children should use one of the seat belts provided.

All 50 states have child restraint laws. You should be aware of the specific requirements in your state. Child and/or infant safety seats must be properly placed and installed in the **rear seat**. You must use a commercially available child restraint system that meets the requirements of the Federal Motor Vehicle Safety Standards (FMVSS).

Children could be injured or killed in a crash if their restraints are not properly secured. For small children and babies, a child seat or infant seat must be used. Before buying a particular child restraint system, make sure it fits your car and seat belts, and fits your child. Follow all the instructions provided by the manufacturer when installing the child restraint system.

WARNING:

- **A child restraint system must be placed in the rear seat. Never install a child or infant seat on the front passenger's seat. Should an accident occur and cause the passenger side airbag to deploy, it could severely injure or kill an infant or child seated in an infant or child seat. Thus, only use a child restraint in the rear seat of your vehicle.**
- **Since a safety belt or child restraint system can become very hot if it is left in a closed vehicle, be sure to check the seat cover and buckles before placing a child there.**
- **When the child restraint system is not in use, store it in the trunk or fasten it with a safety belt so that it will not be thrown forward in the case of a sudden stop or an accident.**
- **Children who are too large to be in a child restraint should still sit in the rear seat and be restrained with the available lap/shoulder belts. Never allow children to ride in the front passenger seat.**
- **Always make sure that the shoulder belt portion of the lap/shoulder belt is positioned midway over the shoulder, never across the neck or behind the back. Moving the child closer to the center of the vehicle may help provide a good shoulder belt fit. The lap belt portion of the lap/shoulder belt or the center seat lap belt must always be positioned as low as possible on the child's hips and as snug as possible.**
- **If the seat belt will not properly fit the child, we recommend the use of an approved booster seat in the rear seat in order to raise the child's seating height so that the seat belt will properly fit the child. Before purchasing a booster seat, make sure that it meets applicable Federal Motor Vehicle Safety Standards (FMVSS) and that it is satisfactory for use with this vehicle.**
- **Never allow a child to stand up or kneel on the seat.**
- **Never use an infant carrier or child safety seat that "hooks" over a seatback; it may not provide adequate security in an accident.**
- **Never allow a child to be held in a person's arms while they are in a moving vehicle, as this could result in serious injury to the child in the event of an accident or a sudden stop. Holding a child in a moving vehicle does not provide the child with any means of protection during an accident, even if the person holding the child is wearing a seat belt.**

B230B01GK-GAT

Using a Child Restraint System

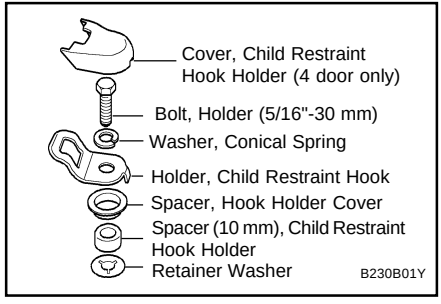

For small children and babies, the use of a child seat or infant seat is strongly recommended. This child seat or infant seat should be of appropriate size for the child and should be installed in accordance with the manufacturer's instructions. It is further recommended that the seat be placed in the vehicle's rear seat since this can make an important contribution to safety. Your vehicle is provided with two child restraint hook holders for installing the child seat or infant seat.

B230C02F-AAT

Installing a child Restraint Seat

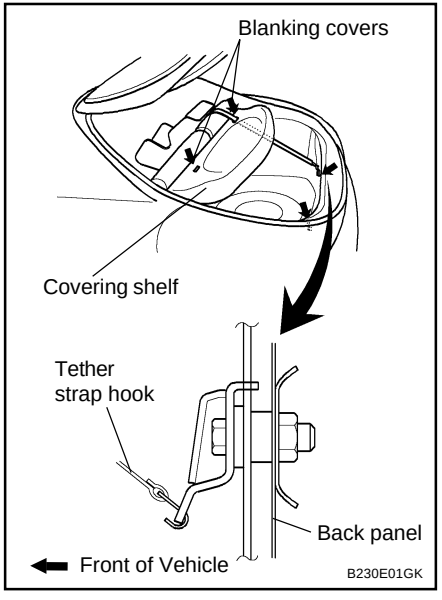

Two child restraint hook holders are located on the vertical back panel.
To install the child restraint seat, remove the blanking covers on the covering shelf.
And, connect the child restraint tether strap hook to the child restraint hook holder through the hole on the covering shelf.

B230G01GK-AAT

Installation on outboard Rear Seats

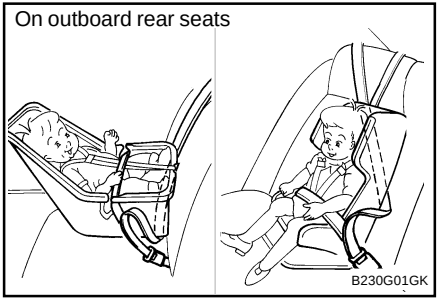

To install a child restraint system in the outboard rear seats, extend the shoulder/lap belt entirely from its retractor until a "click" is felt. This will engage the seat belt retractor automatic locking feature, which allows the seat belt to retract but not extend. Install the child restraint system, buckle the seat belt and allow the seat belt to take up any slack. Make sure that the lap portion of the belt is tight around the child restraint system and the shoulder portion of the belt is positioned so that it can not interfere with the child's head or neck. Also, double check to be sure that the retractor has engaged the automatic locking feature by trying to extend webbing out of the retractor. If the retractor is in the automatic locking mode, the belt will be locked. After installation of the child restraint system, try to move it in all directions to be sure the child restraint system is securely

installed. If you need to tighten the belt, pull more webbing toward the retractor. When you unbuckle the seat belt and allow it to retract, the retractor will automatically revert back to its normal seated passenger emergency locking usage condition.

NOTE:

- **Before installing the child restraint system in any seating position, read the instructions supplied by the child restraint system manufacturer.**
- **If the seat belt does not operate as described, have the system checked immediately by your authorized Hyundai dealer.**

WARNING:

- **If the retractor is not in the Automatic Locking mode, the child restraint system can move when your vehicle turns or stops abruptly.**
- **Do not install a child restraint system in the front passenger seat. Should an accident occur and cause the passenger side supplemental airbag to deploy, it could severely injure or kill an infant or child seated in an infant or child seat. Therefore, only use a child restraint system in the rear seat of your vehicle.**

B230D01GK-AAT

Securing the Child Restraint Seat with the "ISOFIX" System

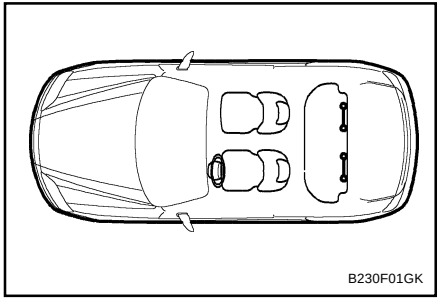

Some child seat manufacturers make child restraint seats that are labeled as ISOFIX or ISOFIX-compatible child restraint seats. These seats include two rigid or webbing mounted attachments that connect to two ISOFIX anchors at specific seating positions in your vehicle. This type of child restraint seat eliminates the need to use seat belts to attach the child seat for forward-facing child restraint seats.

ISOFIX anchors have been provided in your vehicle. The ISOFIX anchors are located in the left and right outboard rear seating positions. Their locations are shown in the illustration.

There is no center rear seating position.

WARNING:

- **There is no center rear seat position.**
- **Do not install a child restraint seat at the center of the rear seat using the vehicle's ISOFIX anchors. The ISOFIX anchors are only provided for the left and right outboard of the rear seat. Do not misuse the ISOFIX anchors by attempting to attach a child restraint seat in the middle of rear seat position to the ISOFIX anchors. In a crash, the child restraint seat ISOFIX attachments may not be strong enough to secure the child restraint seat properly in the center of the rear seat and may break, causing serious injury or death.**
- **Do not mount more than one child restraint to a single tether or to a child restraint lower anchorage point. The improper increased load may cause the anchorage points or tether anchor to break, causing serious injury or death.**
- **Attach the ISOFIX or ISOFIX-compatible child restraint seat only to the appropriate locations shown in the illustration.**
- **Always follow the installation and use instructions provided by the manufacturer of the child restraint.**

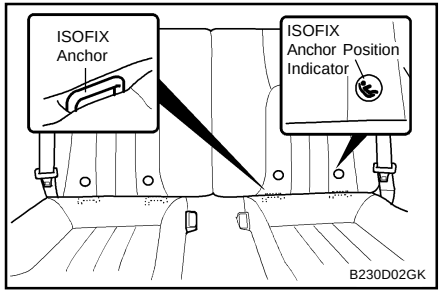

The ISOFIX anchors are located between the seatback and the seat cushion of the rear seat left and right outboard seating positions.
Follow the child seat manufacturer's instructions to properly install child restraint seats with ISOFIX or ISOFIX-compatible attachments.

Once you have installed the ISOFIX child restraint, assure that the seat is properly attached to the ISOFIX and tether anchors. Also, test the child restraint seat before you place the child in it. Tilt the seat from side to side. Also try to tug the seat forward. Check to see if the anchors hold the seat in place.

WARNING:
If the child restraint is not anchored properly, the risk of a child being seriously injured or killed in a collision greatly increases.

B180B01GK-GAT

Pre-tensioner Seat Belt (If Installed)

Your Hyundai vehicle is equipped with driver's and front passenger's pre-tensioner seat belts. The purpose of the pre-tensioner is to make sure that the seat belts fit tightly against the occupant's body in certain frontal collisions.
The pre-tensioner seat belts can be activated alone or, where the frontal collision is severe enough, together with the airbags.

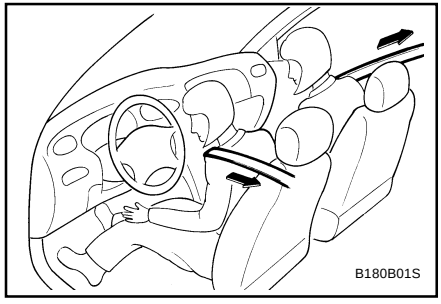

The pre-tensioner seat belt operates in the same way as an Emergency Locking Retractor (ELR) type of seat belt. When the vehicle stops suddenly, or if the occupant tries to lean forward too quickly, the seat belt retractor will lock into position. However, in certain frontal collisions, the pre-tensioner will activate and pull the seat belt into tighter contact against the occupant's body.

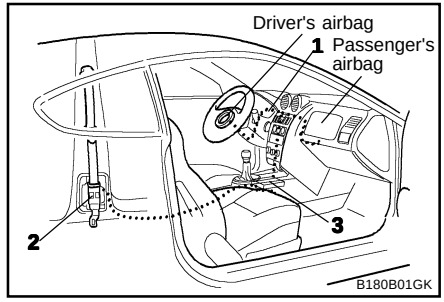

The seat belt pre-tensioner system consists mainly of the following components.

Their locations are shown in the illustration.

1. SRS airbag warning light
2. Seat belt pre-tensioner assembly
3. SRS control module

WARNING:
To obtain maximum benefit from a pre-tensioner seat belt:

1. **The seat belt must be worn correctly.**
2. **The seat belt must be adjusted to the correct position.**

NOTE:

- **Both the driver's and front passenger's pre-tensioner seat belts will be activated in certain frontal collisions. The pre-tensioner seat belts can be activated alone or, where the frontal collision is severe enough, together with the airbags.**
- **When the pre-tensioner seat belts are activated, a loud noise may be heard and fine dust, which may appear to be smoke, may be visible in the passenger compartment. These are normal operating conditions and are not hazardous.**
- **Although it is harmless, the fine dust may cause skin irritation and should not be breathed for prolonged periods. Wash your hands and face thoroughly after an accident in which the pre-tensioner seat belts were activated.**

CAUTION:

- **The control module that activates the SRS airbag controls the pre-tensioner seat belt also.**
- **If there is some malfunction in the pre-tensioner seat belt circuit, the warning light will illuminate even if there is no malfunction in the SRS airbag system. If the SRS airbag warning light does not illuminate or illuminates continuously when the ignition key is turned to "ON", or if it remains illuminated after blinking for approximately 6 seconds, or if it illuminates while the vehicle is being driven, please have an authorized Hyundai dealer inspect the pre-tensioner seat belt or SRS airbag system as soon as possible.**

WARNING:

- **Pre-tensioners are designed to operate only one time. After activation, pre-tensioner seat belts must be replaced. All seat belts, of any type, should always be replaced after they have been worn during a collision.**
- **The pre-tensioner seat belt assembly mechanisms become hot during activation. Do not touch the pre-tensioner seat belt assemblies for several minutes after they have been activated.**
- **Do not attempt to inspect or replace the pre-tensioner seat belts yourself. This must be done by an authorized Hyundai dealer.**
- **Do not strike the pre-tensioner seat belt assemblies.**
- **Do not attempt to service or repair the pre-tensioner seat belt system in any manner.**
- **Improper handling of the pre-tensioner seat belt assemblies, and failure to heed the warnings to not strike, modify, inspect, replace, service or repair the pre-tensioner seat belt assemblies may lead to improper operation or inadvertent activation and serious injury.**
- **Always wear the seat belts when driving or riding in a motor vehicle.**

B240A01GK-GAT

SUPPLEMENTAL RESTRAINT (AIRBAG) SYSTEM (SRS) (If Installed)

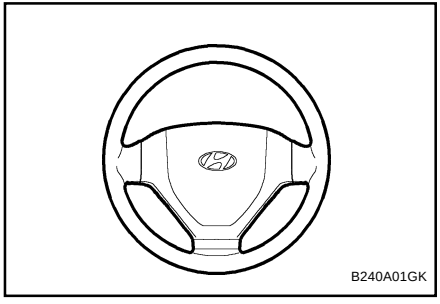

Your Hyundai is equipped with a Supplemental Restraint (Airbag) System. The indications of the system's presence are the letters "SRS AIR BAG" embossed on the ornament in the steering wheel and the passenger's side front panel pad above the glove box.

The Hyundai SRS consists of airbags installed under the pad covers in the center of the steering wheel and the passenger's side front panel above the glove box. The purpose of the SRS is to provide the vehicle's driver and/or the front passenger with additional protection than that offered by the seat belt system alone, in case of a frontal impact of sufficient severity.

NOTE:
Be sure to read information about the SRS on the labels provided on the backside of the sun visor and in the glove box.

WARNING:

- **As its name implies, the SRS is designed to work with, and be supplemental to, the driver's and the passenger's three point seat belt systems and is not a substitute for them. Therefore, your seat belts must be worn at all times while the vehicle is in motion. The airbags deploy only in certain frontal impact conditions severe enough to cause significant injury to the vehicle occupants.**
- **The SRS is designed to deploy the airbags only when an impact is sufficiently severe and when the impact angle is less than 30° from the forward longitudinal axis of the vehicle and will not deploy in side, rear or rollover impacts. Additionally, the airbags will only deploy once. Thus, seat belts must be worn at all times.**
- Front airbags are not intended deploy in light collisions in which protection can be provided by the seat belt.

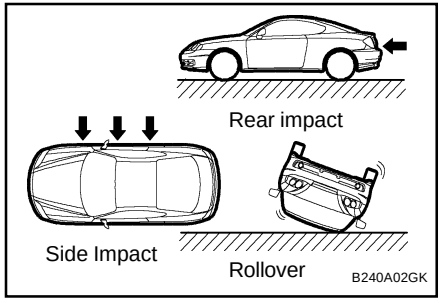

- Front airbags are not intended to deploy in side-impact, rear-impact or rollover crashes. In addition, airbags will not deploy in frontal crashes below the deployment threshold speed.
- **The driver should sit back as far as possible while still maintaining control of the vehicle. If you are sitting too close to the airbag, it can cause death or serious injury when it inflates.**
- **No objects should be placed over or near the airbag modules on the steering wheel, instrument panel, and the front passenger's panel above the glove box, because any such object could cause harm if the vehicle is in a crash severe enough to cause the airbags to deploy.**
- **If the airbags deploy, they must be replaced by an authorized Hyundai dealer.**
- **Do not tamper with or disconnect SRS wiring, or other components of the SRS system. Doing so could result in injury, due to accidental firing of the airbags or by rendering the SRS inoperative.**
- **Do not install a child restraint system in the front passenger seat position. A child restraint system must never be placed in the front seat. The infant or child could be severely injured or killed by an airbag deployment in case of an accident.**
- **Do not allow children to ride in the front passenger seat. If older children (teenagers and older) must ride in the front seat, make sure they are always properly belted and that the seat is moved back as far as possible.**
- **For maximum safety protection in all types of crashes, all occupants including the driver should always wear their seat belts whether or not an airbag is also provided at their seating position to minimize the risk of severe injury or death in the event of a crash. Do not sit or lean unnecessarily close to the airbag while the vehicle is in motion.**
- **The SRS airbag system must deploy very rapidly to provide protection in a crash. If an occupant is out of position because of not wearing a seat belt, the airbag may forcefully contact the occupant causing serious or fatal injuries.**

B240B02GK-AAT

SRS Components and Functions

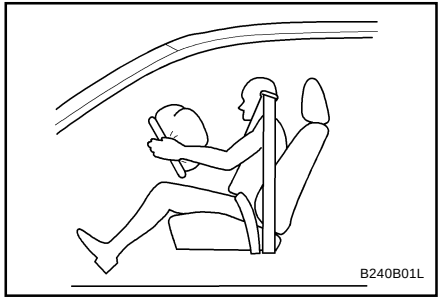

The SRS consists of the following components:

- Driver's Airbag Module
- Passenger's Airbag Module
- Knee Bolster
- SRS Service Reminder Indicator (SRI)
- SRS Control Module (SRSCM)

The SRSCM continually monitors all elements while the ignition is "ON" to determine if a frontal or near-frontal impact is severe enough to require airbag deployment.

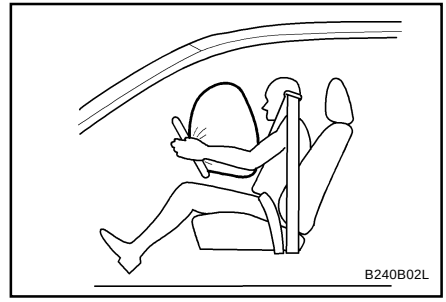

The SRS service reminder indicator (SRI) on the instrument panel will blink for about 6 seconds after the ignition key is turned to the "ON" position or after the engine is started, after which the SRI should go out.

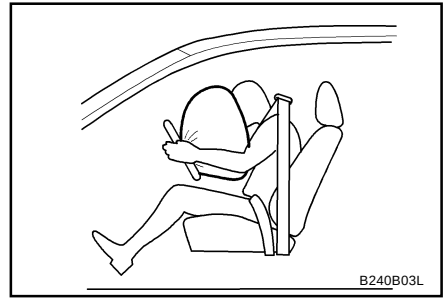

The airbag modules are located both in the center of the steering wheel and in the front passenger's panel above the glove box. When the SRSCM detects a considerable impact to the front of the vehicle, it will automatically deploy the airbags.

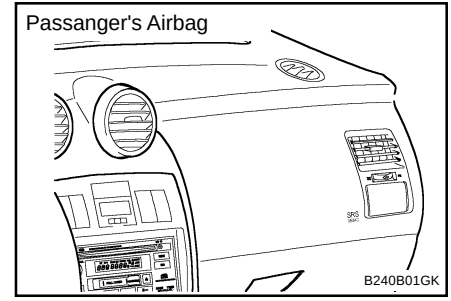

CAUTION:

Do not install or place any accessories (drink holder, cassette holder, sticker, etc) on the front passenger's panel above the glove box in a vehicle with a passenger's air bag. Such objects may become dangerous projectiles and cause injury if the passenger's air bag inflates.

Upon deployment, tear seams molded directly into the pad covers will separate under pressure from the expansion of the airbags. Further opening of the covers then allows full inflation of the airbags.

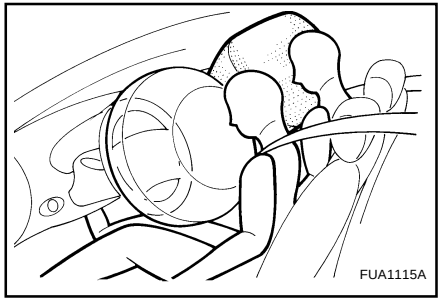

A fully inflated airbag in combination with a properly worn seat belt slows the driver's or the passenger's forward motion, thus reducing the risk of head and chest injury.
After complete inflation, the airbag immediately starts deflating, enabling the driver to maintain forward visibility.

CAUTION:

When installing a container of liquid air freshener inside a vehicle, do not place it near the instrument cluster nor on the instrument panel pad surface. If there is any leakage from the air freshener onto these areas (instrument cluster, instrument panel pad or air ventilator), it may damage these parts. If the liquid from the air freshener does leak onto these areas, wash them with water immediately.

WARNING:

- **When the SRS is activated, there may be a loud noise and fine dust will be released throughout the vehicle. These conditions are normal and are not hazardous. However, the fine dust generated during airbag deployment may cause skin irritation. Be sure to wash your hands and face thoroughly with lukewarm water and a mild soap after an accident in which the airbags were deployed.**
- **The SRS can function only when the ignition key is in the "ON" position. If the SRS SRI does not come on or illuminates continuously when the ignition key is turned to "ON", or continuously remains on after flashing for about 6 seconds when the ignition key is turned to the "ON" position, or after the engine is started, or comes on while driving, the SRS is not working properly. If this occurs, have your vehicle immediately inspected by your Hyundai dealer.**
- **Before you replace a fuse or disconnect a battery terminal, turn the ignition key to the "LOCK" position or remove the ignition key. Never remove or replace the air bag related fuse(s) when the ignition key is in the "ON" position. Failure to heed this warning will cause the SRS SRI to illuminate.**

B990B03Y-AAT

Side Impact Airbag (If installed)

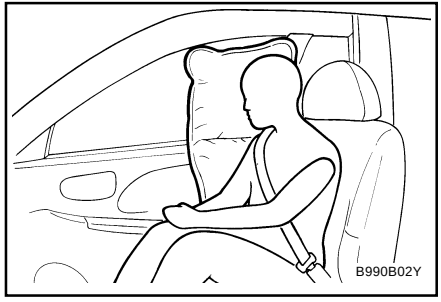

Your Hyundai is equipped with a side impact airbag in each front seat. The purpose of the airbag is to provide the vehicle's driver and/or the front passenger with additional protection than that offered by the seat belt alone. The side impact airbags are designed to deploy only during certain side-impact collisions, depending on the crash severity, angle, speed and point of impact. The side impact airbags are not designed to deploy in all side impact situations.

WARNING:

- **For best protection from the side impact airbag system and to avoid being injured by the deploying side impact airbag, both front seat occupants should sit in an upright position with the seat belt properly fastened. The driver's hands should be placed on the steering wheel at the**

9:00 and 3:00 o'clock positions. The passenger's arms and hands should be placed in their laps.

- **Do not use any accessory seat covers.**
- **Use of seat covers could prevent or reduce the effectiveness of the system.**
- **Do not install any accessories on the side or near the side impact airbag.**
- **Do not use excessive force on the side of the seat.**
- **Do not place any objects over the airbag or between the airbag and yourself.**
- **Do not place any objects (an umbrella, bag, etc.) between the front door and the front seat. Such objects may become dangerous projectiles and cause injury if the supplemental side impact airbag inflates.**
- **To prevent unexpected deployment of the side impact airbag that may result in personal injury,avoid impact to the side airbag sensor when the ignition key is on.**

B240C02A-AAT

SRS Care

- The SRS is virtually maintenance free and there are no parts you can safely service by yourself. The entire SRS system must be inspected by an authorized Hyundai dealer in 10 years after the date that the vehicle was manufactured.
- Any work on the SRS system, such as removing, installing, repairing, or any work on the steering wheel must be performed by a qualified Hyundai technician. Improper handling of the airbag system may result in serious personal injury.

B240C01A

WARNING:

- **Do not install a child restraint system in the front passenger seat position. A child restraint system must never be placed in the front seat. The infant or child could be severely injured or killed by an airbag deployment in case of an accident.**
- **Modification to SRS components or wiring, including the addition of any kind of badges to the pad covers or modifications to the body structure, can adversely affect SRS performance and lead to possible injury.**
- **For cleaning the airbag pad covers, use only a soft, dry cloth or one which has been moistened with plain water. Solvents or cleaners could adversely affect the airbag covers and proper deployment of the system.**
- **No objects should be placed over or near the airbag modules on the steering wheel, instrument panel, and the front passenger's panel above the glove box, because any such object could cause harm if the vehicle is in a crash severe enough to cause the airbags to inflate.**
- **If the airbags inflate, they must be replaced by an authorized Hyundai dealer.**
- **Do not tamper with or disconnect SRS wiring, or other components of the SRS system. Doing so could result in injury, due to accidental firing of the airbags or by rendering the SRS inoperative.**

- **If components of the airbag system must be discarded, or if the vehicle must be scrapped, certain safety precautions must be observed. Your Hyundai dealer knows these precautions and can give you the necessary information. Failure to follow these precautions and procedures could increase the risk of personal injury.**
- **If you sell your vehicle, be sure to inform the new owner of these important points and make certain that this manual is transferred to the new owner.**
- **If your car was flooded and has soaked carpeting or water on the floor, you shouldn't try to start the engine; have the car towed to an authorized Hyundai dealer.**

B250A01GK-AAT

INSTRUMENTS AND CONTROLS

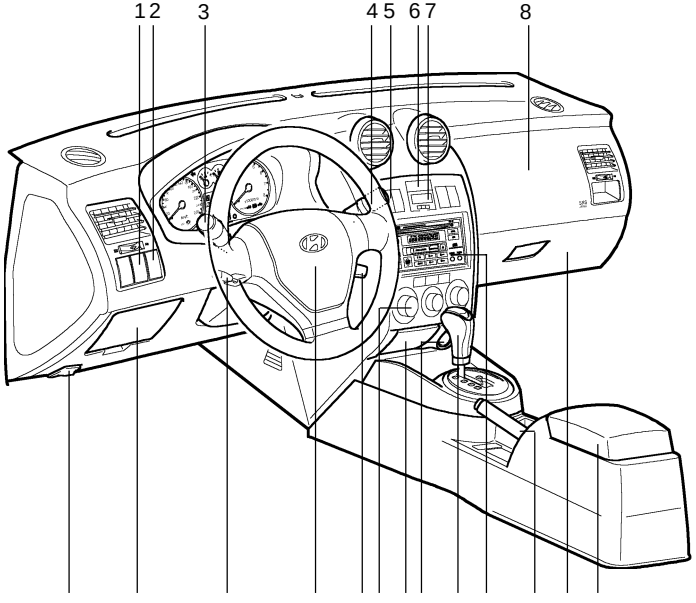

HGK001B

1. Traction Control System (If installed)
2. Panel Brightness Control Knob (Rheostat Switch)
3. Multi-Function Light
4. Windshield Wiper/Washer Switch
5. Front Fog Light Switch (If installed)
6. Hazard Warning Switch
7. Digital Clock
8. Passenger Air Bag
9. Hood Release Lever
10. Fuse Box Relay
11. Steering Wheel Tilt Lever (If installed)
12. Horn and Driver Airbag
13. Cruise Control Switch (If installed)
14. Heating and Cooling Controls
15. Ashtray
16. Cigarette Lighter
17. Shift Lever
18. Audio System
19. Parking Brake Lever
20. Glove Box
21. Center Console

CAUTION:

When installing a container of liquid air freshener inside a vehicle, do not place it near the instrument cluster nor on the instrument panel pad surface. If there is any leakage from the air freshener onto these areas (Instrument cluster, instrument panel pad or air ventilator), it may damage these parts. If the liquid from the air freshener does leak onto these areas, wash them with water immediately.

B260A01GK-AAT

INSTRUMENT CLUSTER AND INDICATOR LIGHTS

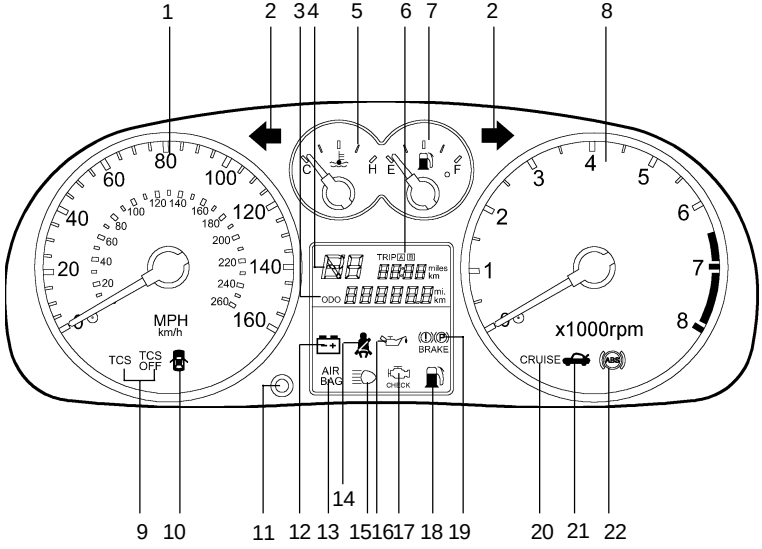

HGK026B

1. Speedometer
2. Turn Signal Indicator Light
3. Odometer
4. Automatic Transaxle Position Indicator Light (If installed)
5. Coolant Temperature Gauge
6. Trip Odometer
7. Fuel Gauge
8. Tachometer
9. Traction Control Indicator Light (If installed)
10. Door Ajar Warning Light
11. Odometer/Trip Odometer Reset Knob
12. Charging System Warning Light
13. SRS (Airbag) Warning Light
14. Seat Belt Warning Light
15. High Beam Indicator Light
16. Oil Pressure Warning Light
17. Malfunction Indicator Light
18. Low Fuel Warning Light
19. Parking Brake/Brake Fluid Level Warning Light
20. Cruise Indicator (If installed)
21. Tailgate Open Warning Light
22. Anti-Lock Brake Warning Light (If installed)

B260B01GK-GAT

SRS (Airbag) Service Reminder Indicator (SRI)

The SRS service reminder indicator (SRI) comes on and flashes for about 6 seconds after the ignition key is turned to the "ON" position or after the engine is started, after which it will go out.

This light also comes on when the SRS is not working properly. If the SRI does not come on or illuminates continuously when the ignition key is turned to "ON", or continuously remains on after flashing for about 6 seconds when you turned the ignition key to the "ON" position or started the engine, or if it comes on while driving, have the SRS inspected by an authorized Hyundai Dealer.

B260P02Y-GAT

ABS Service Reminder Indicator (SRI) (If Installed)

When the key is turned to the "ON" position, the Anti-Lock Brake System SRI will come on and then go off in a few seconds. If the ABS SRI remains on, comes on while driving, or does not come on when the key is turned to the "ON" position, this indicates that there may be a problem with the ABS.
If this occurs, have your vehicle checked by your Hyundai dealer as soon as possible. The normal braking system will still be operational, but without the assistance of the anti-lock brake system.

CAUTION:
If the both ABS SRI and Parking Brake/ Brake fluid level warning lights remain "ON" or come on while driving, there may be a problem with E.B.D (Electronic Brake Force Distribution).
If this occurs, avoid sudden stops and have your vehicle checked by your Hyundai dealer as soon as possible.

B260D01A-AAT

Turn Signal Indicator Lights

The blinking green arrows on the instrument panel show the direction indicated by the turn signals. If the arrow comes on but does not blink, blinks more rapidly than normal, or does not illuminate at all, a malfunction in the turn signal system is indicated. Your dealer should be consulted for repairs.

B260F01A-AAT

High Beam Indicator Light

The high beam indicator light comes on whenever the headlights are switched to the high beam or flash position.

B260G01A-AAT

Oil Pressure Warning Light

CAUTION:
If the oil pressure warning light stays on while the engine is running, serious engine damage may result. The oil pressure warning light comes on whenever there is insufficient oil pressure. In normal operation, it should come on when the ignition switch is turned on, then go out when the engine is started. If the oil pressure warning light stays on while the engine is running, there is a serious malfunction.
If this happens, stop the car as soon as it is safe to do so, turn off the engine and check the oil level. If the oil level is low, fill the engine oil to the proper level and start the engine again. If the light stays on with the engine running, turn the engine off immediately. In any instance where the oil light stays on when the engine is running, the engine should be checked by a Hyundai dealer before the car is driven again.

B260H01GK-AAT

Parking Brake/Brake Fluid Level Warning Light

WARNING:

If you suspect brake trouble, have your brakes checked by a Hyundai dealer as soon as possible. Driving your car with a problem in either the brake electrical system or brake hydraulic system is dangerous, and could result in a serious injury or death.

Warning Light Operation

The parking brake/brake fluid level warning light should come on when the parking brake is applied and the ignition switch is turned to "ON" or "START". After the engine is started, the light should go out in three seconds.

If the parking brake is not applied, the warning light should come on when the ignition switch is turned to "ON" or "START", then go out in three seconds. If the light comes on at any other time, you should slow the vehicle and bring it to a complete stop in a safe location off the roadway. The brake warning light indicates that the brake fluid level in the brake master cylinder is low and hydraulic brake fluid conforming to DOT 3 or DOT 4 specifications should be added. After adding fluid, if no other trouble is found, the car should be immediately and carefully driven to a Hyundai dealer for inspection. If further trouble is experienced, the vehicle should not be driven at all but taken to a dealer by a professional towing service or some other safe method.

Your Hyundai is equipped with dual-diagonal braking systems. This means you still have braking on two wheels even if one of the dual systems should fail. With only one of the dual systems working, more than normal pedal travel and greater pedal pressure are required to stop the car. Also, the car will not stop in as short a distance with only half of the brake system working. If the brakes fail while you are driving, shift to a lower gear for additional engine braking and stop the car as soon as it is safe to do so.

B260J01A-AAT

Charging System Warning Light

The charging system warning light should come on when the ignition is turned on, then go out when the engine is running. If the light stays on while the engine is running, there is a malfunction in the electrical charging system. If the light comes on while you are driving, stop, turn off the engine and check under the hood. First, make certain the generator drive belt is in place. If it is, check the tension of the belt. Do this as shown on page 6-13 by pushing down on the center of the belt. And then have the system checked by your Hyundai dealer.

B260K01F-AAT

Tail Gate Open Warning Light

This light remains on unless the tail gate is completely closed.

B260L01Y-AAT

Door Ajar Warning Light and Chime

The door ajar warning light warns you that a door is not completely closed and the chime warns you that driver's side front door is not completely closed.

NOTE:

To remind you not to lock the key inside the car, the warning light comes on whenever the key is in the "LOCK" position and a door is open. The warning chime only sounds whenever the key is in the "LOCK" position and the driver's side front door is open. The chime sounds and the light remains on until the key is removed from the ignition.

B260M01A-AAT

Low Fuel Level Warning Light

The low fuel level warning light comes on when the fuel tank is approaching empty. When it comes on, you should add fuel as soon as possible. Driving with the fuel level warning light on or with the fuel level below "E" can cause the engine to misfire and damage the catalytic converter.

B260C01GK-GAT

TCS OFF TCS Traction Control Indicator Lights(If installed)

The traction control indicators change operation according to the ignition switch position and whether the system is in operation or not.
They will illuminate when the ignition key is turned to the "ON" position, but should go out after three seconds. If the TCS-OFF indicator blinks or stays on, take your car to your authorized Hyundai dealer and have the system checked. See section 2 for more information about the TCS system.

B260N01GK-AAT

CHECK Malfunction Indicator Light

This light illuminates when there is a malfunction of an exhaust gas related component, and the system is not functioning properly so that the exhaust gas regulation values are not satisfied. This light will also illuminate when the ignition key is turned to the "ON" position, and will go out after engine starting. If it illuminates while driving, or does not illuminate when the ignition key is turned to the "ON" position, take your car to your nearest authorized Hyundai dealer and have the system checked.

B260E01A-AAT

Seat Belt Reminder Light And Chime

The seat belt reminder light comes on for about 6 seconds when the ignition key is turned from the "OFF" position to "ON" or "START". If the driver's seat belt is not fastened, the warning chime will sound at the same time.

B260Q01E-GAT

CRUISE Cruise Indicator (If Installed)

The cruise indicator light in the instrument cluster is illuminated when the cruise control main switch on the end of the barrel is pushed.
The indicator light does not illuminate when the cruise control main switch is pushed a second time.
Information about the use of cruise control is beginning on page 1-44.

B270A01A-AAT

BRAKE PAD WEAR WARNING SOUND

The front disc brake pads have wear indicators that should make a high-pitched squealing or scraping noise when new pads are needed. The sound may come and go or be heard all the time when the vehicle is moving. It may also be heard when the brake pedal is pushed down firmly. Excessive rotor damage will result if the worn pads are not replaced. See your Hyundai dealer immediately.

B280A01A-AAT

FUEL GAUGE

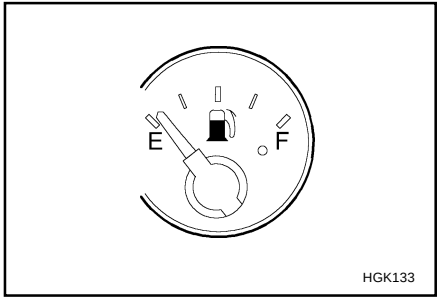

The needle on the gauge indicates the approximate fuel level in the fuel tank. The fuel capacity is given in Section 9.

B290A02A-AAT

ENGINE COOLANT TEMPERATURE GAUGE

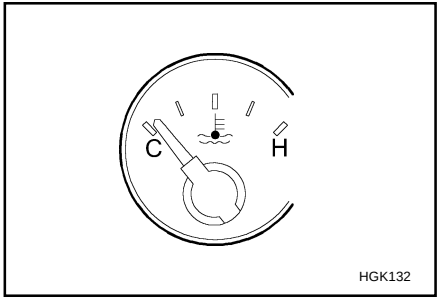

WARNING:

Never remove the radiator cap when the engine is hot. The engine coolant is under pressure and could erupt and cause severe burns. Wait until the engine is cool before removing the radiator cap.

The needle on the engine coolant temperature gauge should stay in the normal range. If it moves across the dial to "H" (Hot), pull over and stop as soon as possible and turn off the engine. Then open the hood and check the coolant reservoir level and the water pump drive belt. If you suspect cooling system trouble, have your cooling system checked by a Hyundai dealer as soon as possible.

B300A01A-AAT

SPEEDOMETER

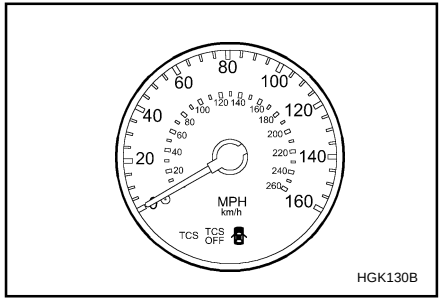

Your Hyundai's speedometer is calibrated in miles per hour (on the outer scale) and kilometers per hour (on the inner scale).

B330A01F-AAT

TACHOMETER

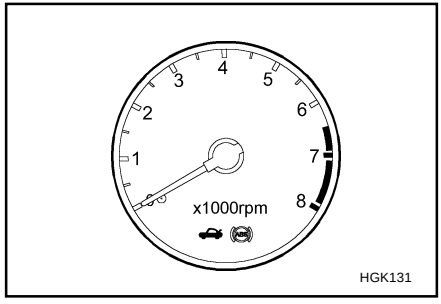

The tachometer registers the speed of your engine in revolutions per minute (rpm). It is useful to help you shift at the appropriate engine speed to avoid lugging or over-reving the engine.

CAUTION:

The engine should not be raced to such a speed that the needle enters the red zone on the tachometer face. This can cause severe engine damage and may void your warranty.

B310B01GK-GAT

ODOMETER/TRIP ODOMETER

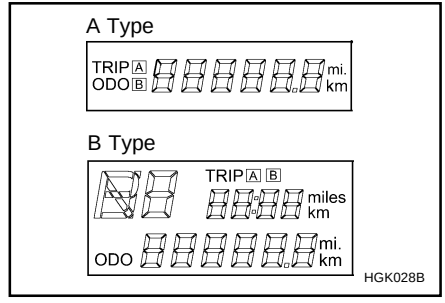

Function of digital odometer/trip odometer

Pushing in the reset switch on the right side of speedometer when the ignition switch is turned "ON" will display the following sequence:

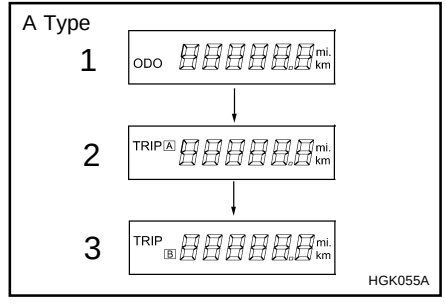

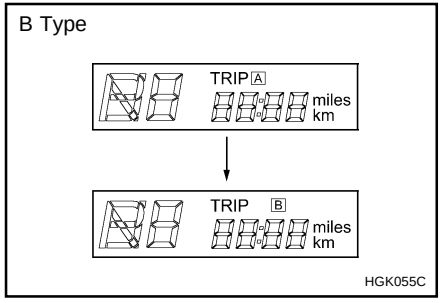

1. Odometer

The odometer records the total driving distance in kilometers or miles, and is useful for keeping a record for maintenance intervals.

NOTE:

Any alteration of the odometer may void your warranty coverage.

2,3 Trip odometer

Records the distance of 2 trips in kilometers or miles.
TRIP A: First distance you have traveled from your origination point to a first destination.
TRIP B: Second distance from the first destination to the final destination.

To shift from TRIP A to TRIP B, press the reset switch. When pressed for 1 second, it will reset to 0.

B340A01A-AAT

COMBINATION TURN SIGNAL, HEADLIGHT AND HIGH-BEAM SWITCH

Turn Signal Operation

Pulling down on the lever causes the turn signals on the left side of the car to blink. Pushing upwards on the lever causes the turn signals on the right side of the car to blink. As the turn is completed, the lever will automatically return to the center position and turn off the turn signals at the same time. If either turn signal indicator light blinks more rapidly than usual, goes on but does not blink, or does not go on at all, there is a malfunction in the system. Check for a burned-out fuse or bulb or see your Hyundai dealer.

B340B01A-AAT

Lane Change Signal

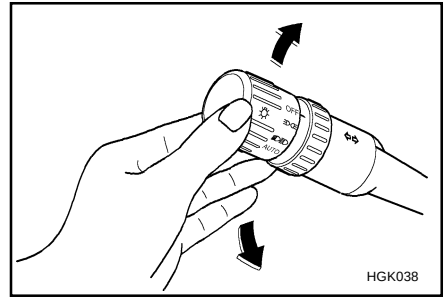

To indicate a lane change, move the lever up or down to a point where it begins flashing.
The lever will automatically return to the center position when released.

B340C02E-AAT

Headlight Switch

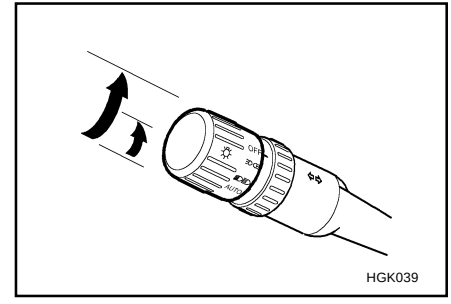

To operate the headlights, turn the barrel on the end of the multi-function switch. The first position turns on the parking lights, sidelights, tail lights and instrument panel lights. The second position turns on the headlights.

Parking light auto cut

If you do not turn the parking lights "OFF" after driving, the parking light will automatically shut "OFF" when the driver's door is opened.
To turn them "ON" again you must simply turn the ignition key to the "ON" position.

B340D01A-AAT

High-beam Switch

To turn on the headlight high beams, push the lever forward (away from you). The high beam indicator light will come on at the same time. For low beams, pull the lever back toward you.

B340F01L-GAT

Auto Light (If installed)

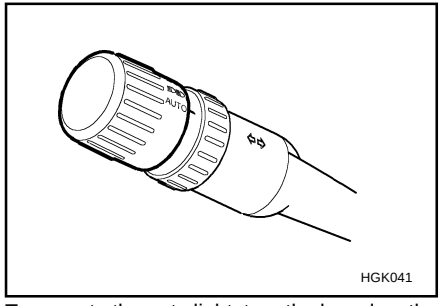

To operate the auto light, turn the barrel on the end of the multi-function switch. If you set the multi-function switch to "AUTO", the tail lights and headlights will be turned automatically on or off according to external illumination.

B340E01A-AAT

Headlight Flasher

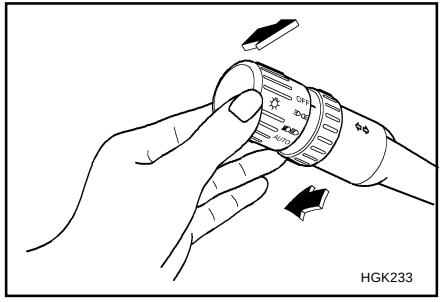

To flash the headlights, pull the switch lever toward you, then release it. The headlights can be flashed even though the headlight switch is in the "OFF" position.

B350A01GK-AAT

WINDSHIELD WIPER AND WASHER SWITCH

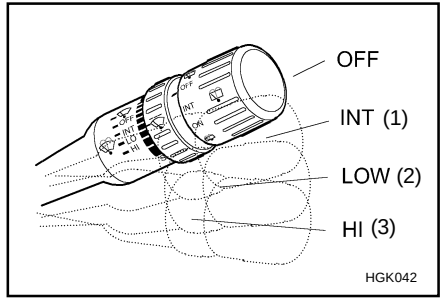

The windshield wiper switch has three positions:

(1) Intermittent wiper operation
(2) Low-speed operation
(3) High-speed operation

NOTE:

To prevent damage to the wiper system, do not attempt to wipe away heavy accumulations of snow or ice. Accumulated snow and ice should be removed manually. If there is only a light layer of snow or ice, operate the heater in the defrost mode to melt the snow or ice before using the wiper.

Mist Wiper Operation

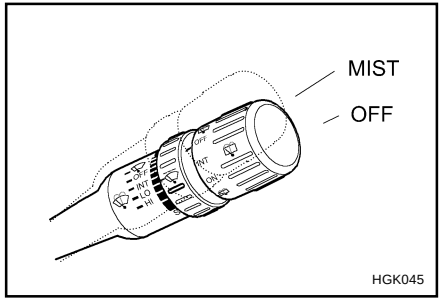

HGK045

If a single wipe is desired in mist, move the windshield wiper and washer control lever up.

B350C01S-AAT

Adjustable Intermittent Wiper Operation

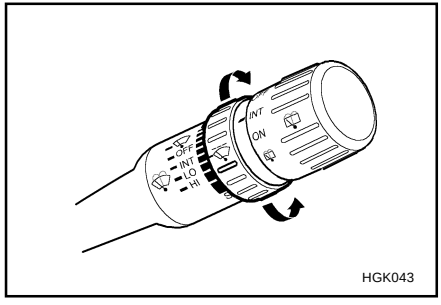

HGK043

To use the intermittent wiper feature, place the wiper switch in the "INT" position. With the switch in this position, the interval between wipes can be varied from 2 to 10 seconds by turning the interval adjuster barrel.

B350B01A-AAT

Windshield Washer Operation

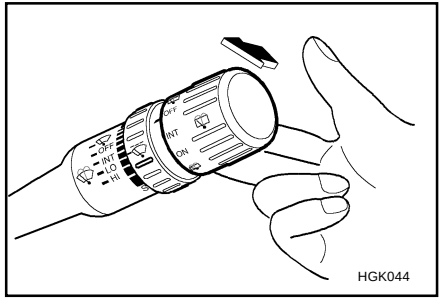

HGK044

To use the windshield washer, pull the wiper/washer lever toward the steering wheel. When the washer lever is operated, the wipers automatically make two passes across the windshield. The washer continues to operate until the lever is released.

NOTE:

- **Do not operate the washer more than 15 seconds at a time or when the fluid reservoir is empty.**
- **In icy or freezing weather, be sure the wiper blades are not frozen to the glass prior to operating the wipers.**
- **In areas where water freezes in winter, use windshield washer antifreeze.**

B350A01O-AAT

Tailgate Wiper And Washer Switch

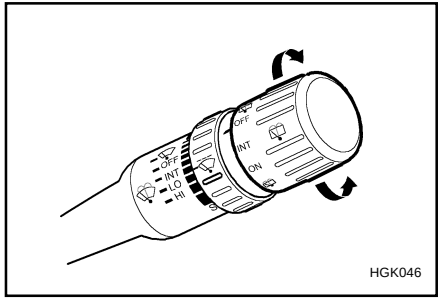

HGK046

1. :The washer fluid will be sprayed onto the rear window and the wiper operates while the rear window wiper barrel is placed in this position.
2. OFF
3. INT :To use the intermittent wiper feature, place the rear window wiper barrel in the "INT" position.
4. ON :When the point indicates the "ON", the rear window wiper operates continuously.

B370A01A-AAT

HAZARD WARNING SYSTEM

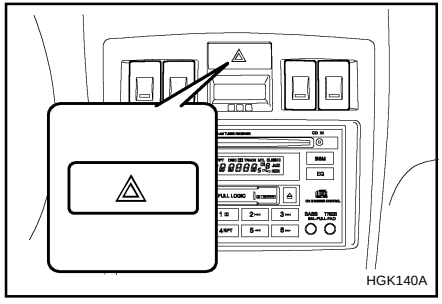

The hazard warning system should be used whenever you find it necessary to stop the car in a hazardous location. When you must make such an emergency stop, always pull off the road as far as possible.
The hazard warning lights are turned on by pushing in on the hazard switch. This causes all turn signal lights to blink. The hazard warning lights will operate even though the key is not in the ignition.
To turn the hazard warning lights off, push in on the switch a second time.

B380A01A-AAT

REAR WINDOW DEFROSTER SWITCH

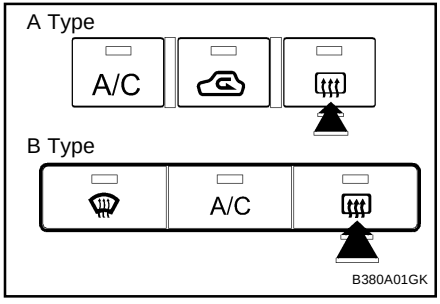

The rear window defroster is turned on by pushing in on the switch. To turn the defroster off, push in on the switch a second time. The rear window defroster automatically turns itself off after about 15 minutes. To restart the defroster cycle, push in on the switch again after it has turned itself off.

CAUTION:

Do not clean the inner side of the rear window glass with an abrasive type of glass cleaner or use a scraper to remove foreign deposits from the inner surface of the glass as this may cause damage to the defroster elements.

NOTE:

The engine must be running for the rear window defroster to operate.

B400A01F-AAT

DIGITAL CLOCK

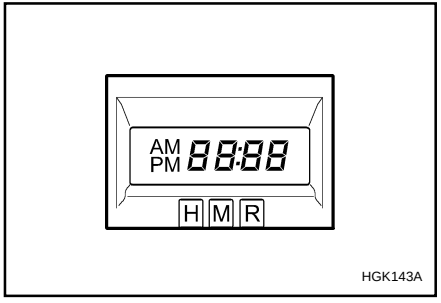

There are three control buttons for the digital clock. Their functions are:

HOUR - Push "H" to advance the hour indicated.

MIN - Push "M" to advance the minute indicated.

RESET - Push "R" to reset minutes to ":00" to facilitate resetting the clock to the correct time. When this is done:

Pressing "R" between 10 : 30 and 11 : 29 changes the readout to 11 : 00.
Pressing "R" between 11 : 30 and 12 : 29 changes the readout to 12 : 00.

B410A01A-AAT

INSTRUMENT PANEL LIGHT CONTROL (RHEOSTAT)

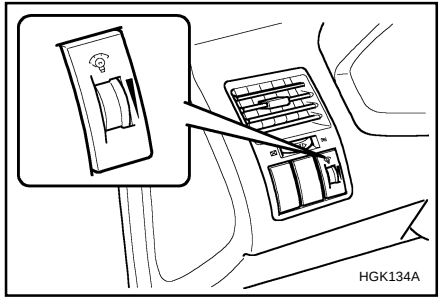

The instrument panel lights can be made brighter or dimmer by turning the instrument panel light control knob.

B420A02A-AAT

CIGARETTE LIGHTER

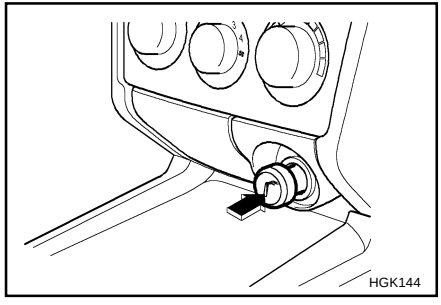

For the cigarette lighter to work, the key must be in the "ACC" position or the "ON" position. To use the cigarette lighter, push it all the way into its socket. When the element has heated, the lighter will pop out to the "ready" position. Do not hold the cigarette lighter pressed in. This can damage the heating element and create a fire hazard.
If it is necessary to replace the cigarette lighter, use only a genuine Hyundai replacement or its approved equivalent.

CAUTION:

Do not use electric accessories or equipment other than the Hyundai genuine parts in the socket.

B430A01GK-AAT

FRONT ASHTRAY

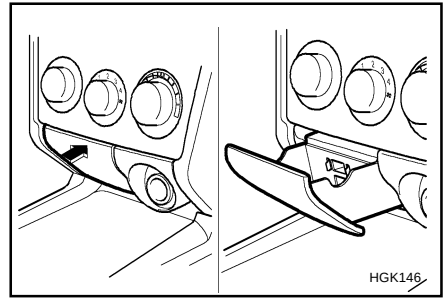

The front ashtray may be opened by pushing and releasing the ashtray door at its top edge.

To remove the ashtray in order to clean it, the metal ash receptacle should be lifted out from the ashtray door. Do not attempt to remove the entire ashtray door assembly or damage will result. To reinstall it, place it in the proper position and press it down in the ashtray door. The ashtray lamp will only illuminate when the exterior body lights are switched on.

B450A01GK-AAT

DRINK HOLDER (If Installed)

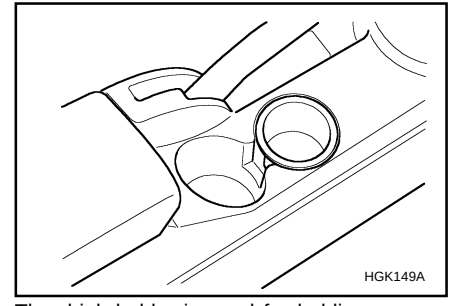

The drink holder is used for holding cups or cans.

WARNING:

Do not place objects other than cups or cans in the drink holder. Such objects can be thrown out in the event of a sudden stop or an accident, possibly injuring the passengers in the vehicle.

B460A01Y-AAT

SUNROOF (If installed)

Sun Shade

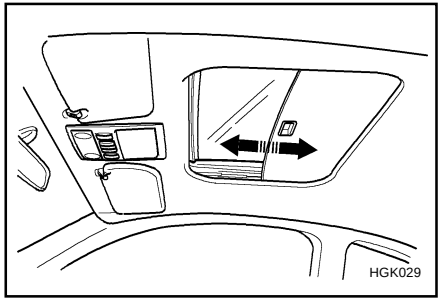

Your HYUNDAI is equipped with a sliding sunshade which you can manually adjust to let in light with the sunroof closed, or to block sunlight.

WARNING:
Never adjust the sunshade while driving.

B460B01GK-GAT

Opening the Sunroof System

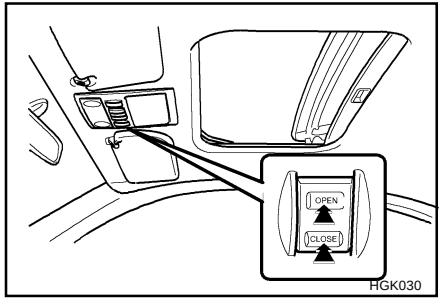

The sunroof can be electrically opened or closed with the ignition key in the "ON" position. The sunroof is moved to its fully open position by pushing the "OPEN" switch, and to stop at the desired position, push in any switches (Open, Close, Up, Down). To close, press and hold the "CLOSE" button.
Release the button when the sunroof reaches the desired position.

WARNING:
- **Do not close a sunroof if anyone's hands, arms or body are between the sliding glass and the sunroof sash, as this could result in injury.**
- **Do not place your head or arms out of the sunroof opening at any time.**

CAUTION:
- **Do not open the sunroof in severely cold temperature or when it is covered with ice or snow.**
- **Periodically remove any dirt that may have accumulated on the guide rails.**

B460C01GK-GAT

Tilting the Sunroof System

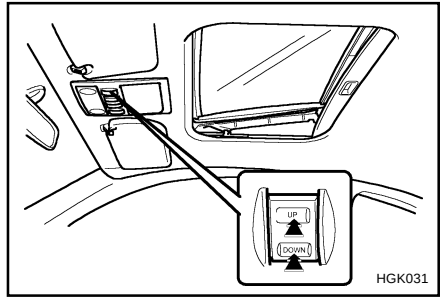

The sunroof is moved to its fully tilt up position by pushing the "UP" switch, and to stop at the desired position, push in any switches (Open, Close, Up, Down).
To tilt down, press and hold the "DOWN" button. Release the button when the sunroof reaches the desired position.

NOTE:
After washing the car or after there is rain, be sure to wipe off any water that is on the sunroof before operating it.

B460D03GK-AAT

Manual Operation of Sunroof

If the sunroof does not electrically operate:

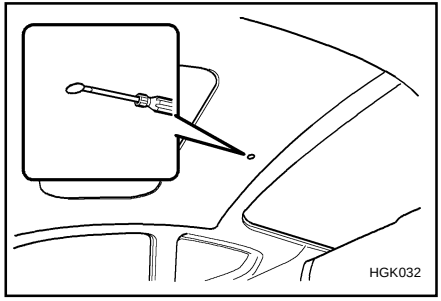

1. Remove the cap located in the rear roof panel by using a coin or screw driver.

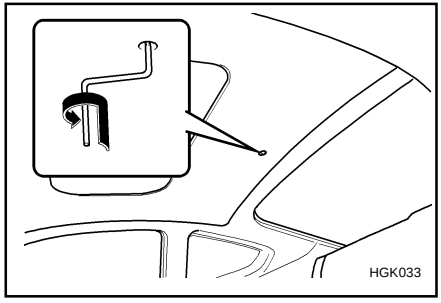

2. Insert the hexagonal head wrench provided with the vehicle into the socket. This wrench can be found in the vehicle's trunk or glove box.
3. Push and turn the wrench clockwise to close or counterclockwise to open the sunroof.

B460E02GK-GAT

Resetting the Sunroof System

If the battery has been recharged, disconnected or is manually with operating the hexagonal head wrench, you may need to reset the sunroof.

To do this;

1. Turn the ignition switch "OFF".
2. With pressing "OPEN" "UP" button at the same time, turn the ignition switch "ON".

   The resetting is failed when the ignition key to the "OFF" within 1.5 seconds.

3. If the sunroof is set like this, the sunroof is reset with tilting up/down automatically once for all.

CAUTION:

If the sunroof is not reset, it may not be operated normally.

B480A01GK-GAT

MAP LIGHT

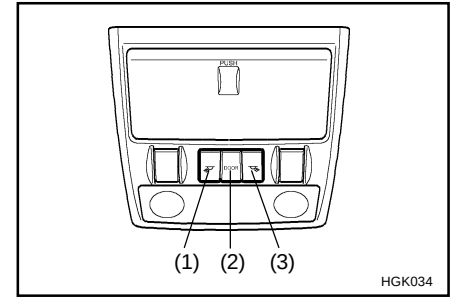

(1) Push in the map light switch to turn on the driver side light.
(2) In the "DOOR" position, the interior courtesy light comes on when any door is opened regardless of the ignition key position. The light goes out gradually 6 seconds after the door is closed.
(3) Push in the map light switch to turn on the passenger side light.

B491A02F-AAT

SPECTACLE CASE

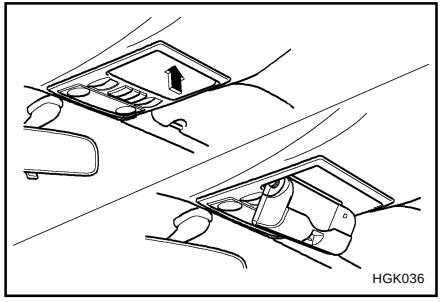

The spectacle case is located on the front overhead console.
Push the end of the cover to open or close the spectacle case.

WARNING:
Do not open the spectacle case while the vehicle is moving.
The rear view mirror of the vehicle can be blocked by an open spectacle case.

B500A01A-AAT

GLOVE BOX

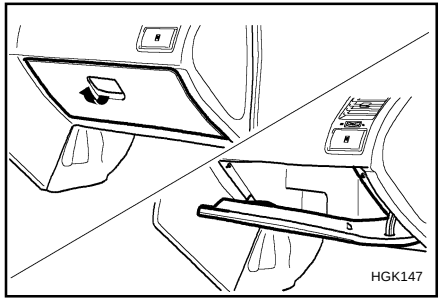

WARNING:
To avoid the possibility of injury in case of an accident or a sudden stop, the glove box door should be kept closed when the car is in motion.

o To open the glove box, pull on the glove box release lever.

B510B01A-AAT

OUTSIDE REAR VIEW MIRROR

Electric Type (If installed)

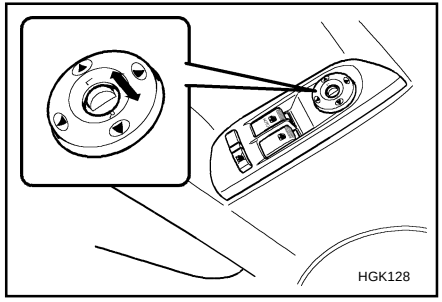

The outside rearview mirrors can be adjusted to your preferred rear vision, both directly behind the vehicle, and to the rear of the left and right sides.
The remote control outside rearview mirror switch controls the adjustments for both the right and left outside mirror.

To adjust the position of either mirror:

1. Move the selecting switch to the right or left to activate the adjustable mechanism for the corresponding door mirror.
2. Next, adjust the mirror angle by depressing the appropriate perimeter switch as illustrated.

CAUTION:

- **Do not operate the switch continuously for an unnecessary length of time.**
- **Scraping ice from the mirror face could cause permanent damage. To remove any ice, use a sponge, soft cloth or approved deicer.**

WARNING:

Be careful when judging the size or distance of any object seen in the passenger side rear view mirror. It is a convex mirror with a curved surface. Any objects seen in this mirror are closer than they appear.

B510D01Y-AAT

OUTSIDE REARVIEW MIRROR HEATER (If Installed)

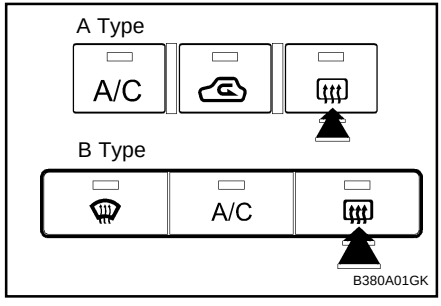

The outside rearview mirror heater is actuated in connection with the rear window defroster. To heat the outside rearview mirror glass, push in the switch for the rear window defroster. The rearview mirror glass will be heated for defrosting or defogging and will give you improved rear vision in inclement weather conditions. Push the switch again to turn the heater off. The outside rearview mirror heater automatically turns itself off after 15 minutes.

B510C01A-AAT

FOLDING THE OUTSIDE REAR VIEW MIRRORS

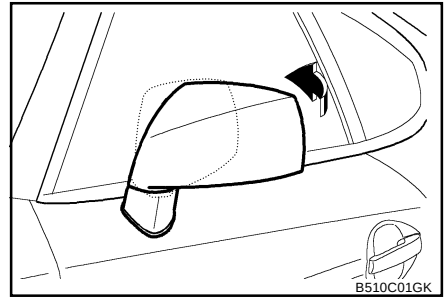

To fold the outside rear view mirrors, push them toward the rear.
The outside rear view mirrors can be folded rearward for parking in narrow areas.

WARNING:

Do not adjust or fold the outside rear view mirrors while the vehicle is moving. This could result in loss of control, and an accident which could cause death, serious injury or property damage.

B520A01A-AAT

DAY/NIGHT INSIDE REAR VIEW MIRROR

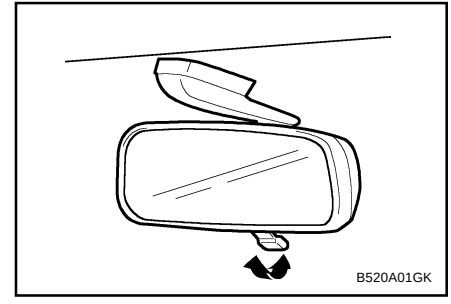

Your Hyundai is equipped with a day/night inside rear view mirror. The "night" position is selected by flipping the tab at the bottom of the mirror toward you. In the "night" position, the glare of headlights of cars behind you is reduced.

B520B01O-GAT

DAY/NIGHT REAR VIEW MIRROR (Electric type) (If installed)

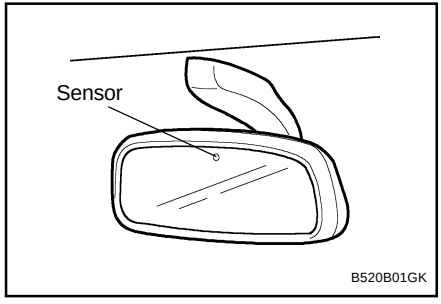

The electric type day/night inside rearview mirror automatically controls the glare of headlights of the car behind you. Adjust the rearview mirror to the desired position.

B530A01A-AAT

PARKING BRAKE

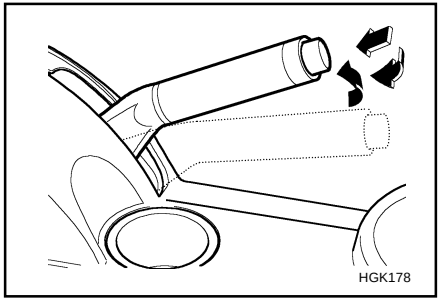

Always engage the parking brake before leaving the car. This also turns on the parking brake indicator light when the key is in the "ON" or "START" position. Before driving away, be sure that the parking brake is fully released and the indicator light is off.

- o To engage the parking brake, pull the lever up as far as possible.
- o To release the parking brake, pull up the lever and press the thumb button. Then, while holding the button in, lower the brake lever.

B360A01F-AAT

FRONT FOG LIGHT SWITCH (If Installed)

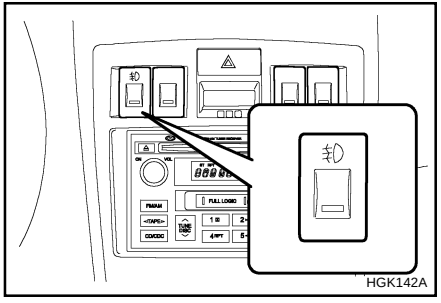

To turn on the front fog lights, push the switch. They will light when the headlights are turned on.

B550A01S-GAT

HIGH-MOUNTED REAR STOP LIGHT

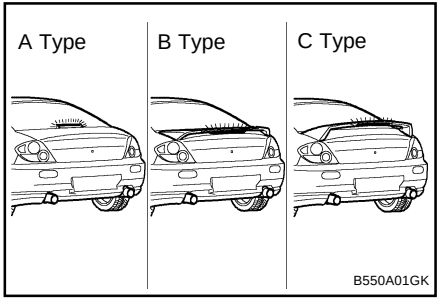

In addition to the lower-mounted rear stoplights on either side of the car, the high mounted rear stoplight in the center of the rear window or inserted in the rear spoiler also lights when the brakes are applied.

B620A01S-AAT

FRONT DOOR EDGE WARNING LIGHT

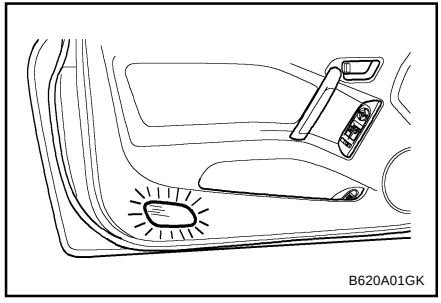

A red light comes on when the front door is opened. The purpose of this light is to assist when you get in or out and also to warn passing vehicles.

B570A01GK-GAT

HOOD RELEASE

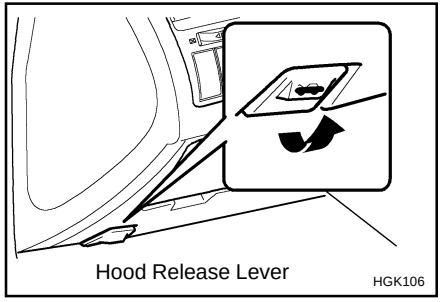

1. Pull the release knob to unlatch the hood.
2. Press the safety hook lever up and lift the hood.
3. Raise the hood by hand.

When closing the hood, slowly close the hood and make sure it locks into place.

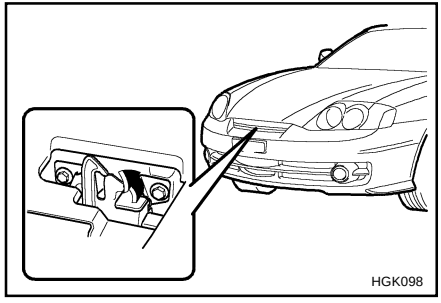

WARNING:

- **Always double check to be sure that the hood is firmly latched before driving away. If it is not latched, the hood could fly open while the vehicle is being driven, causing a total loss of visibility, which might result in an accident.**
- **Do not move the vehicle with the hood in the raised position, as vision is obstructed and the hood could fall or be damaged.**

B560A02S-AAT

REMOTE FUEL-FILLER LID RELEASE

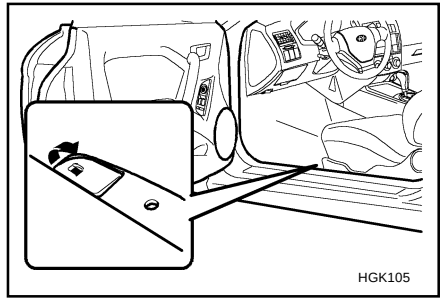

The fuel-filler lid may be opened from inside the vehicle by pulling up on the fuel-filler lid opener located on the front floor area on the left side of the car.

NOTE:
If the fuel-filler lid will not open because ice has formed around it, tap lightly or push on the lid to break the ice and release the lid. Do not pry on the lid. If necessary, spray around the lid with an approved deicer fluid (do not use radiator anti-freeze) or move the vehicle to a warm place and allow the ice to melt.

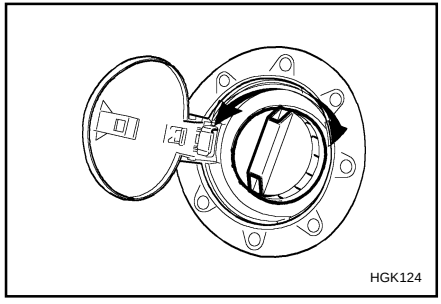
HGK124

WARNING:
- **The fuel cap must be tightened at least 3 clicks, otherwise " CHECK " light will illuminate.**
- **Gasoline vapors are dangerous. Before refueling, always stop the engine and never allow sparks or open flames near the filler area. If you need to replace the filler cap, use a genuine Hyundai replacement part.**
- **If you open the fuel filler cap during high ambient temperatures, a slight "pressure sound" may be heard. This is normal and not a cause for concern.**
  Whenever you open the fuel filler cap, turn it slowly.
- **Make sure the fuel filler cap is replaced and securely seated after fueling. Failure to replace or fully seat the fuel filler cap will result in fuel vapors escaping into the atmosphere and the MIL indicator illuminating.**
- **Do not "TOP-OFF" after the first nozzle shut off when refueling.**

B540A01F-AAT

TAIL GATE

Remote Tail Gate Release

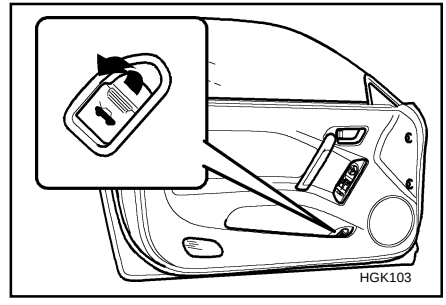
HGK103

To open the tail gate without using the key, pull up the lid release lever.
To close, lower the tail gate, then press down on it until it locks. To be sure the tail gate is securely fastened, always try to pull it up again.

WARNING:
The tail gate should always be kept completely closed while the vehicle is in motion. If it is left open or ajar, poisonous exhaust gases may enter the car resulting in serious illness or death to the occupants. See additional warnings concerning exhaust gases on page 2-1.

B540C01F-AAT

To Unlock Using the Key

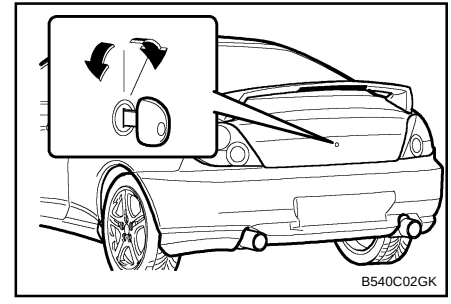
B540C02GK

To open the tail gate, insert the key and turn it clockwise to unlock. The tail gate compartment light illuminates when the tail gate is opened.

B540D01GK-GAT

When you close the tailgate

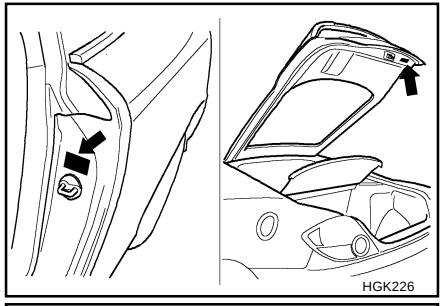
HGK226

HGK227

WARNING:

<u>Do not</u> close an open tailgate (rear hatch) while a person(s) is sitting upright on the rear seat. The tailgate or tailgate glass may contact the head of a person sitting upright on the rear seat. Closing the tailgate onto a person's head may cause serious injuries, including death.

B140A01S-AAT

REAR SEAT WARNING

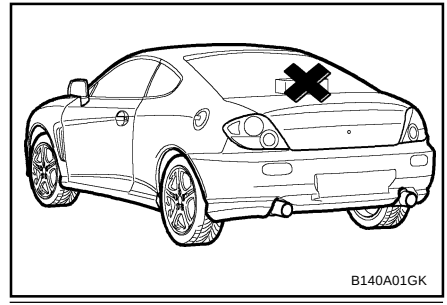
B140A01GK

For the safety of all passengers, luggage or other cargo should not be piled higher than the top of the seatback. In addition, do not place objects on the rear shelf as they may move forward during braking or in an accident and strike vehicle passengers.

B580A01GK-AAT

SUN VISOR

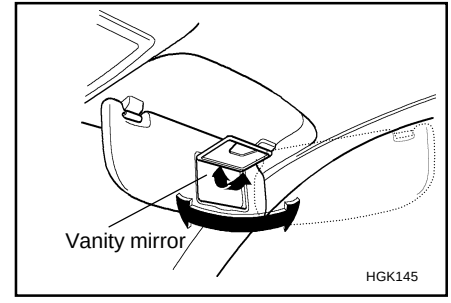

HGK145

Your Hyundai is equipped with sun visors to give the driver and front passenger either frontal or sideward shade. The sun visors are fitted on both sides on all models. To reduce glare or to shut out direct rays of the sun, turn the sun visor down to block the annoyance. A vanity mirror is provided on the back of the sun visor for the front passenger.

NOTE:

The Supplemental Restraint System (SRS) label containing useful information can be found on the back of each sun visor.

WARNING:

Do not place the sun visor in such a manner that it obscures visibility of the roadway, traffic or other objects.

B600A01HP-AAT

STEERING WHEEL TILT LEVER (If installed)

To adjust the steering wheel:

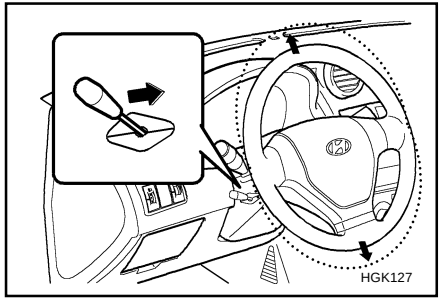

1. Pull the lever toward you and hold it to unlock.
2. Raise or lower the steering wheel to the desired position.
3. After adjustment, release the lever.

WARNING:
Do not attempt to adjust the steering wheel while driving as this may result in loss of control of the vehicle and serious injury or death.

B610A01S-AAT

HORN

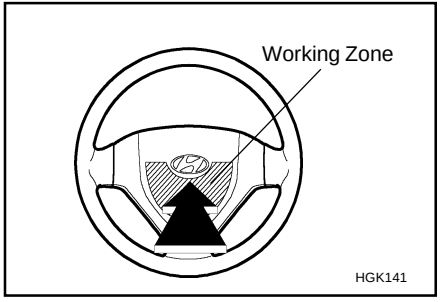

Press the pad on the steering wheel to sound the horn.

B540D02GK-GAT

LUGGAGE NET (If installed)

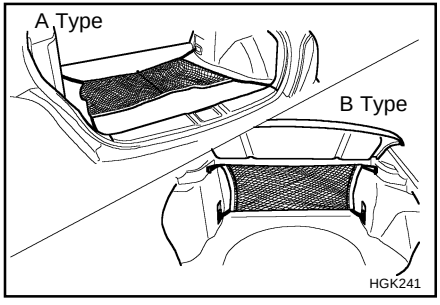

Some objects can be kept in the net in the luggage compartment.
Use the luggage net on the floor(If installed) or at the back of the luggage compartment to prevent objects from sliding.

WARNING:
To avoid eye injury. Do not overstretch. Always keep face and body out of recoil path. Do not use when strap has visible signs of wear or damage.

B990A03Y-AAT

FLOOR MAT ANCHOR

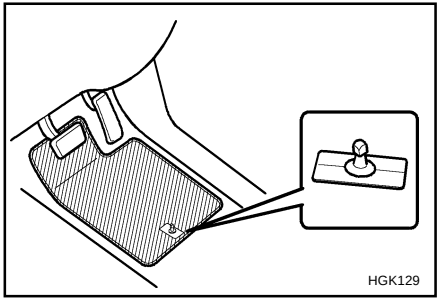

To use a floor mat on the front floor carpet, make sure it attaches to the floor mat anchor in your vehicle.
This keeps the floor mat from sliding forward.

WARNING:

- **Make sure the floor mat is properly placed on the floor carpet. If the floor mat slips and interferes with the movement of the pedals during driving, it may cause an accident.**
- **Don't put an additional floor mat on the top of the anchored mat, otherwise the additional mat may slide forward and interfere with the movement of the pedals.**

B660A01S-AAT

CRUISE CONTROL (If Installed)

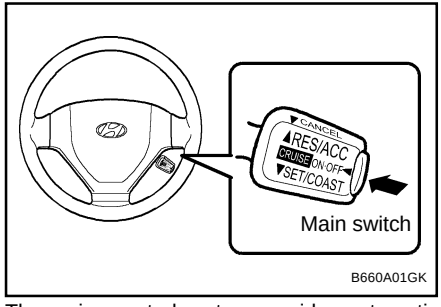

B660A01GK

The cruise control system provides automatic speed control for your comfort when driving on freeways, tollroads, or other noncongested highways. This system is designed to function above approximately 25 mph (40 km/h).

B660B01E-AAT

To Set the Cruise Speed

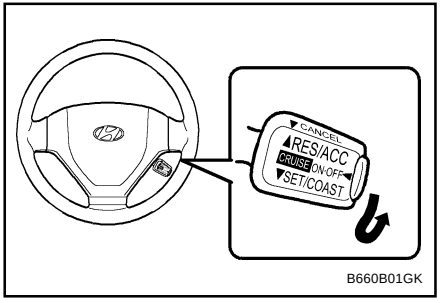

B660B01GK

1. Push in the cruise control main switch on the end of the barrel. The "CRUISE" indicator light in the instrument cluster will be illuminated. This turns the system on.
2. Accelerate to the desired cruising speed above 25 mph (40 km/h).
3. Push the control switch downward to "SET (COAST)" and release it.
4. Remove your foot from the accelerator pedal and the desired speed will automatically be maintained.
5. To increase speed, depress the accelerator pedal enough for the vehicle to exceed the preset speed. When you remove your foot from the accelerator pedal, the vehicle will return to the speed you have set.

WARNING:

To avoid accidental cruise control engagement, keep the cruise control main switch off when not using the cruise control

B660C02E-AAT

To Cancel the Cruise Speed

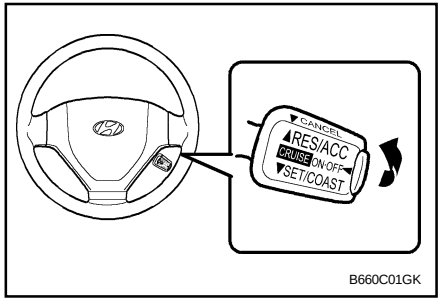

B660C01GK

Do one of the following:

- Pull the control switch toward the steering wheel to "CANCEL" position.
- Depress the brake pedal.
- Depress the clutch pedal (Manual transaxle).
- Shift the selector lever to "N" position (Automatic transaxle).
- Decrease the vehicle speed lower than the memorized speed by 12 mph (20 km/h).
- Decrease the vehicle speed to less than 25 mph (40 km/h).
- Release the main switch.

B660D01E-AAT

To Resume the Preset Speed

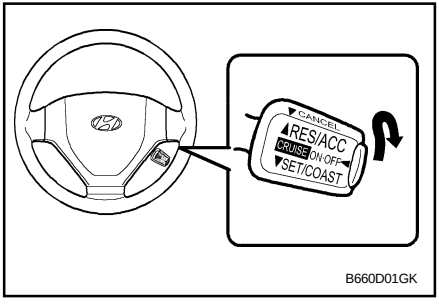

The vehicle will automatically resume the speed set prior to cancellation when you push the control switch upward to "RESUME (ACCEL)" position and release it, providing the vehicle speed is above 25 mph (40 km/h).

B660E01E-AAT

To Reset at a Faster Speed

1. Push the control switch upward to "RESUME (ACCEL)" position and hold it.
2. Accelerate to desired speed and release the control switch. While the control switch is held, the vehicle will gradually gain speed.

B660F01E-AAT

To Reset at a Slower Speed

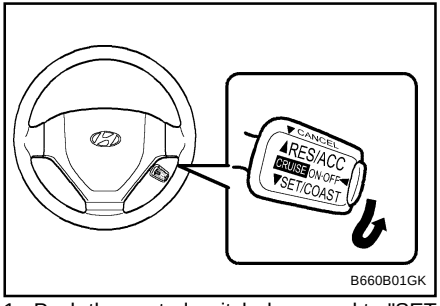

1. Push the control switch downward to "SET (COAST)" and hold it. The vehicle will decelerate.
2. When the desired speed is obtained, release the control switch. While the control switch is pushed, the vehicle speed will gradually decrease.

WARNING:

- **Keep the main switch off when not using the cruise control.**
- **Do not use the cruise control when it may not be safe to keep the car at a constant speed, for instance, driving in heavy or varying traffic, or on slippery (rainy, icy or snow-covered) or winding roads or over 6% up-hill or down-hill roads.**
- **Pay particular attention to the driving conditions whenever using the cruise control system.**
- **During cruise-control driving with a manual transaxle vehicle, do not shift into neutral without depressing the clutch pedal, or the engine will be overrevved. If this happens, depress the clutch pedal or release the main switch.**
- **With the cruise control engaged, when the brake pedal is applied, it is normal to hear the cruise control system deactivate. This is an indication of normal system operation.**
- **During normal cruise control operation, when the "SET(COAST)" is activated or reactivated after applying the brakes, the cruise control will energize after approximately 3 seconds. This delay is normal.**

B710A01GK-GAT

HEATING AND COOLING CONTROL

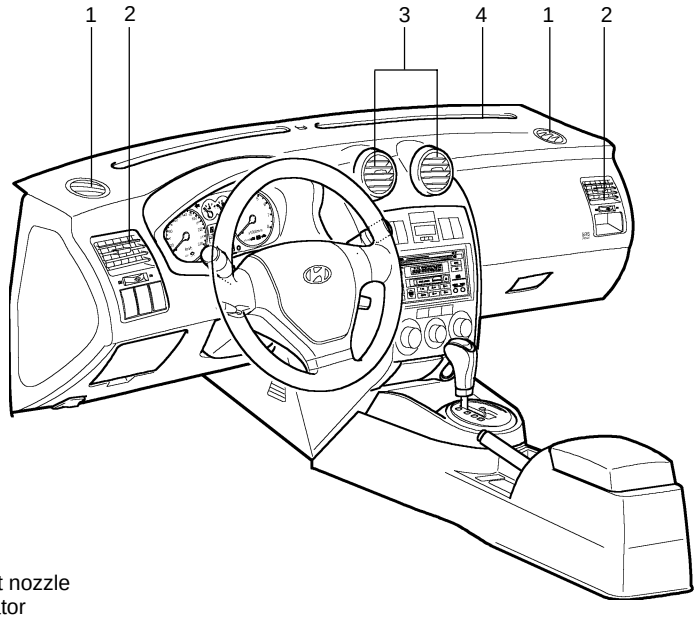

1. Side defrost nozzle
2. Side Ventilator
3. Center Ventilator
4. Windshield Defrost Ventilator

HGK001B

B710A01S-AAT

VENTILATION

To operate the ventilation system:

- o Set the air intake control to "Fresh" mode ( ).
- o To direct all intake air to the dashboard vents, set the airflow control to “Face”.
- o Adjust the fan speed control to the desired speed.
- o Set the temperature control between “Cool” and “Warm”.

B710B01S-AAT

CENTER VENTILATOR

The center ventilators are located in the middle of the dashboard. The direction of air flow from the vents in the center of the dashboard is adjustable.
To control the direction of the air flow, move the knob in the center of the vent up-and-down and side-to-side.

B710C01S-AAT

SIDE VENTILATOR

The side ventilators are located on each side of the dashboard. To change the direction of the air flow, move the knob in the center of the vent up-and-down and side-to-side. The side vent knobs control the amount of outside air entering the vehicle through the side vents. The vents are opened when the vent knob is moved to the up position. The vents are closed when the vent knob is moved to the down position. Keep these vents clear of leaves and other debris.

B670A01GK-GAT

ROTARY TYPE

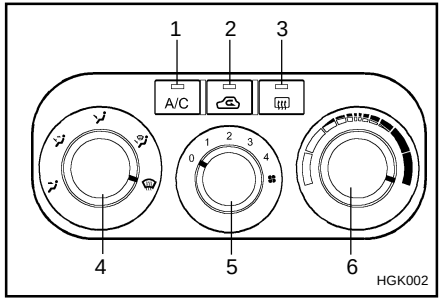

1. Air Conditioning switch
2. Air intake control switch
3. Rear window defroster switch
4. Air flow control switch
5. Fan speed control switch
6. Temperature control switch

B670B01A-AAT

Fan Speed Control (Blower Control)

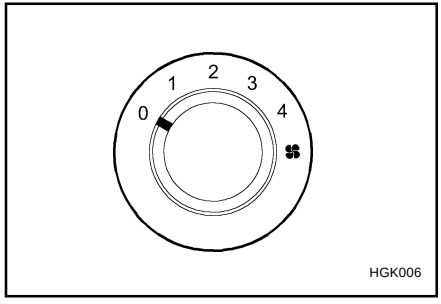

This is used to turn the blower fan on or off and to select the fan speed.
This blower fan speed, and therefore the volume of air delivered from the system, may be controlled manually by setting the blower control between the "1" and "4" positions.

B670E01A-AAT

Temperature Control

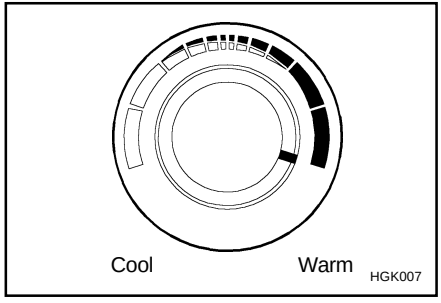

This is used to turn the heating system on and off and to select the degree of heating desired.

B670C02S-AAT

Air Intake Control

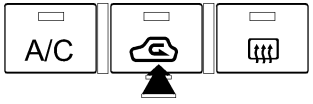

HGK016

This is used to select fresh outside air or recirculation inside air.
To change the air intake control mode, (Fresh mode, Recirculation mode) push the control button.

FRESH MODE ( ) : The indicator light on the button goes off when the air intake control is fresh mode.

RECIRCULATION MODE ( ): The indicator light on the button is illuminated when the air intake control is recirculation mode.

With the "Fresh" mode selected, air enters the vehicle from the outside and is heated or cooled according to the function selected.

With the "Recirculation" mode selected, air from within the passenger compartment will be drawn through the heating system and heated or cooled according to the function selected.

NOTE:

- **It should be noted that prolonged operation of the heating in "Recirculation" mode will give rise to fogging of the windshield and side windows and the air within the passenger compartment will become stale. In addition, prolonged use of the air conditioning with the "Recirculation" mode selected may result in the air within the passenger compartment becoming excessively dry.**
- **When the ignition switch is turned "ON" the air intake control will change to "Recirculation" mode (regardless of switch position). This is normal operation.**

B670D02GK-AAT

Air Flow Control

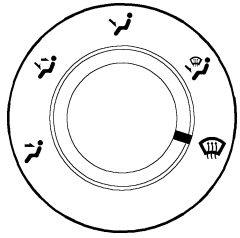

HGK005

This is used to direct the flow of air. Air can be directed to the floor, dashboard outlets, or windshield. Five symbols are used to represent Face, Bi-Level, Floor, Floor-Defrost and Defrost air position.

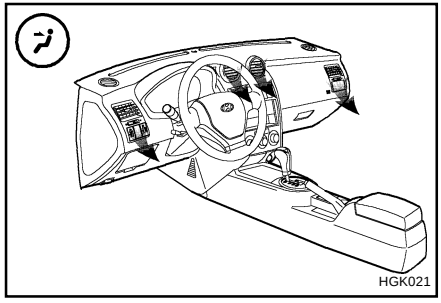

Face-Level

Selecting the "Face" mode will cause air to be discharged through the face level vents.

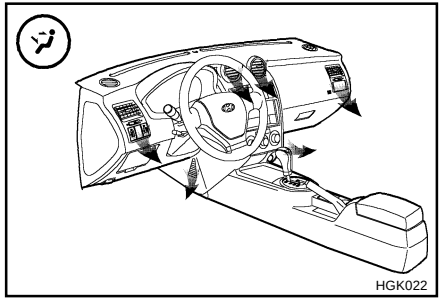

Bi-Level

Air is discharged through the face vents and the floor vents. This makes it possible to have cooler air from the dashboard vents and warmer air from the floor outlets at the same time.

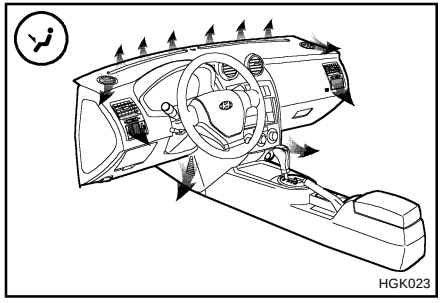

Floor-Level

Air is discharged through the floor vents, windshield defroster nozzle, side defroster nozzle, side ventilator.

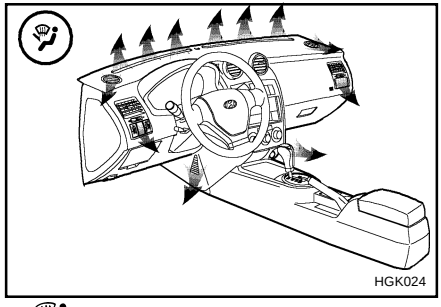

Floor-Defrost Level

Air is discharged through the windshield defrost nozzle, the floor vents, side defroster nozzle, side ventilator.

If the "Floor-Defrost" mode is selected, the A/C will be turn on automatically and "Fresh" mode will be activated.

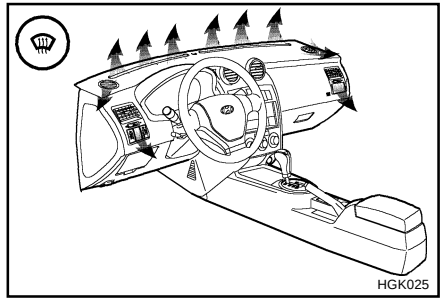

Defrost-Level

Air is discharged through the windshield defrost nozzle, side defroster nozzle, side ventilator.
If the "Defrost" mode is selected, the A/C will turn on automatically and "Fresh" mode will be activated.

B740A01S-AAT

AIR CONDITIONING SYSTEM

Air Conditioning Switch (If installed)

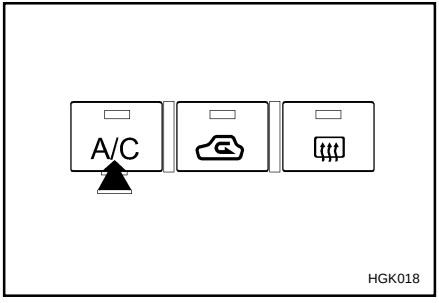

The air conditioning is turned on or off by pushing the A/C button on the heating/air conditioning control panel.

B740B01S-AAT

Air Conditioning Operation

Cooling

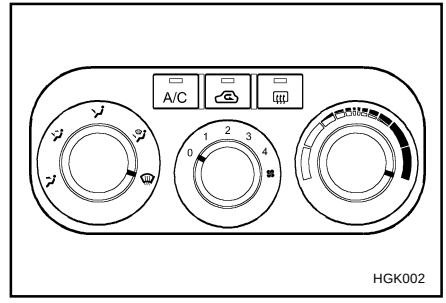

To use the air conditioning to cool the interior:

- o Set the side vent control to "OFF", to shut off outside air entry.
- o Turn on the fan control switch.
- o Turn on the air conditioning switch by pushing in on the switch. The air conditioning indicator light should come on at the same time.
- o Set the air intake control to "Fresh" mode ( ).
- o Set the temperature control to "Cool". ("Cool" provides maximum cooling. The temperature may be moderated by moving the control toward "Warm".)
- o Adjust the fan control to the desired speed. For greater cooling, turn the fan control to one of the higher speeds or temporarily select the "Recirculation" position on the air intake control.

B690A02S-AAT

HEATING CONTROLS

For normal heating operation, set the air intake control to the "Fresh" position and the air flow control to "Floor".

For faster heating, the air intake control should be in the "Recirculation" position.

If the windows fog up, move the air flow control to the "Def" (defroster) position. (The A/C will turn on automatically and "Fresh" mode will be activated.)

For maximum heat, move the temperature control to “Warm”.

B740C01S-AAT

Dehumidified Heating

For dehumidified heating:

- o Turn on the fan control switch.
- o Turn on the air conditioning switch. The air conditioning indicator light should come on at the same time.
- o Set the air intake control to "Fresh" mode ( ).
- o Set the air flow control to "Face".
- o Adjust the fan control to the desired speed.
- o For more rapid action, set the fan at one of the higher speeds.
- o Adjust the temperature control to provide the desired amount of warmth.

B720A02FC-GAT

DEFROSTING/DEFOGGING

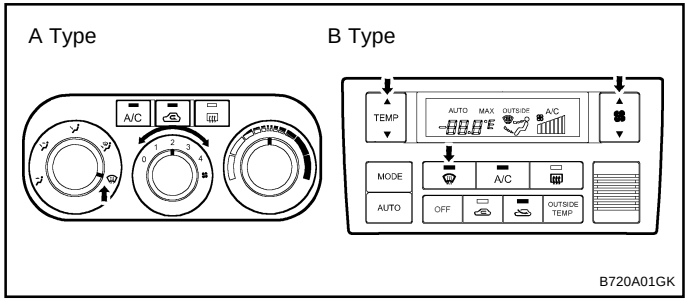

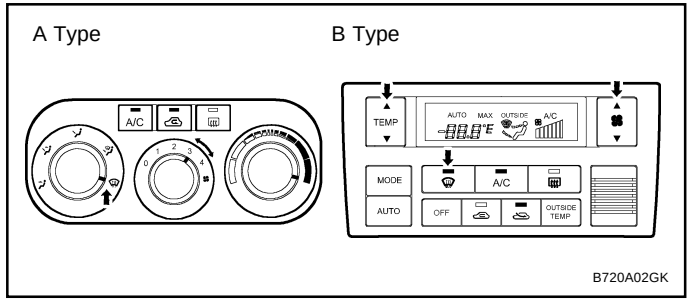

Use the heating/ventilation system to defrost or defog the windshield:

To remove interior fog on the windshield:

- o Set the air flow control to the defrost (⛆) position. (The A/C will turn on automatically and "Fresh" mode will be activated)
- o Set the temperature control to the desired position.
- o Set the fan speed control between "1" and "4" position.

To remove frost or exterior fog on the windshield:

- o Set the air flow control to the defrost (⛆) position. (The A/C will turn on automatically and "Fresh" mode will be activated.)
- o Set the temperature control to warm.
- o Set the fan speed control to position "3" or "4".

NOTE:

When the A/C is operated continuously on the floor-defrost level (⛆) or defrost level (⛆), it may cause fog to form on the exterior windshield. If this occurs, set the air flow control to the face level position (⛆) and fan speed control to the low position.

B730A01FC-GAT

OPERATION TIPS

- To keep dust or unpleasant fumes from entering the car through the ventilation system, temporarily set the air intake control to "Recirculation". Be sure to return the control to "Fresh" when the irritation has passed to keep fresh air in the vehicle. This will help keep the driver alert and comfortable.
- Air for the heating/cooling system is drawn in through the grilles just ahead of the windshield. Care should be taken that these are not blocked by leaves, snow, ice or other obstructions.
- To prevent interior fog on the windshield, set the air intake control to the fresh air ( ) position and fan speed to the desired position.

B970A01Y-AAT

AUTOMATIC HEATING AND COOLING CONTROL SYSTEM (If Installed)

Your Hyundai is equipped with an automatic heating and cooling control system controlled by simply setting the desired temperature.

B970B01GK-GAT

Heating and Cooling Controls

TYPE A (Without Air Quality System)

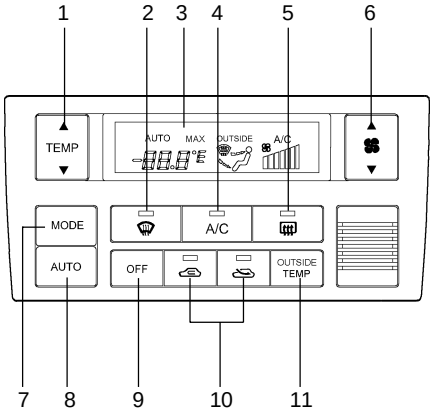

HGK003

TYPE B (With Air Quality System)

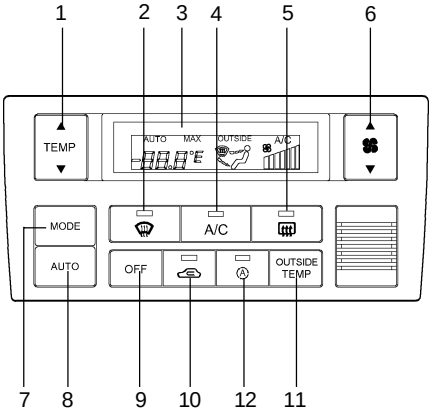

HGK004

1. Temperature Control Button
2. Defroster Switch
3. Display Window
4. Air Conditioning Switch
5. Rear Window Defroster Switch
6. Fan Speed Control Switch
7. Air Flow Control Switch
8. AUTO (Automatic Control)Switch
9. OFF Switch
10. Air Intake Control Switch
11. Ambient Switch
12. Air Quality System Switch (If installed)

B970C02E-AAT

Automatic Operation

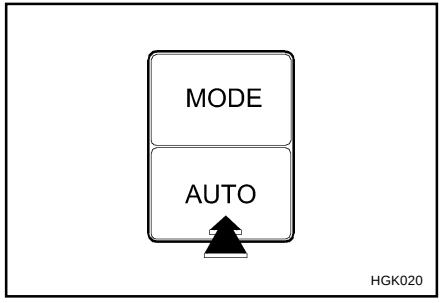

The FATC (Full Automatic Temperature Control) system automatically controls heating and cooling as follows:

1. Push the "AUTO" switch. The indicator light will illuminate confirming that the Face, Floor and/or Bi-Level modes as well as the blower speed and, air conditioner will be controlled automatically.

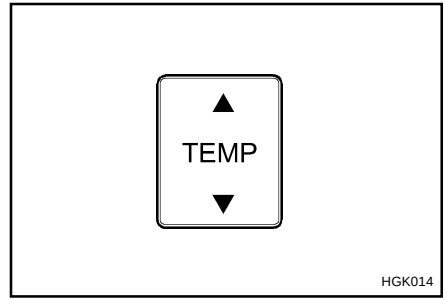

2. Push the "TEMP" button to set the desired temperature.
   The temperature will increase to the maximum 90°F(32°C) by pushing ▲on the button. Each push of the button will cause the temperature to increase by 1°F(0.5°C).
   The temperature will decrease to the minimum 62°F(17°C) by pushing ▼on the button. Each push of the button will cause the temperature to decrease by 1°F(0.5°C).

NOTE:
If the battery has been discharged or disconnected, the temperature mode will reset to centigrade degrees.
This is a normal condition and you can change the temperature mode from centigrade to farenheit as follows;
Press the TEMP button down 3 seconds or more with the OUTSIDE TEMP button held down. The display shows that the unit of temperature is adjusted to centigrade or fahrenheit.
(°C →°F or °F →°C)

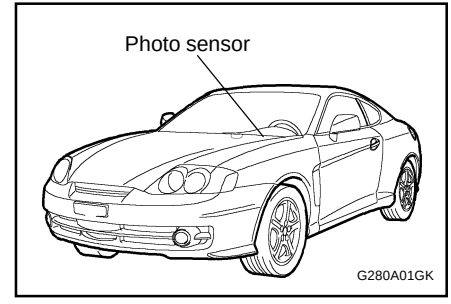

NOTE:
Never place anything over the sensor which is located on the instrument panel to ensure better control of the heating and cooling system.

B995A01Y-GAT

AMBIENT SWITCH

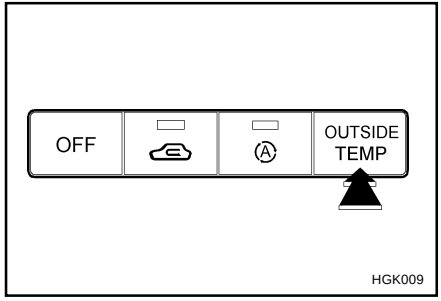

Pressing the OUTSIDE TEMP button displays the ambient temperature on the LCD.

B980A01Y-AAT

MANUAL OPERATION

The heating and cooling system can be controlled manually as well by pushing buttons other than the "AUTO" button. In this state, the system sequentially works according to the order of buttons selected.
The function of the buttons which are not selected will be controlled automatically.
Press the "AUTO" button in order to convert to automatic control of the system.

B980B01Y-AAT

Fan Speed Control Switch

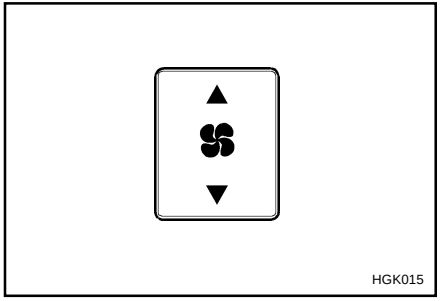

The fan speed can be set to the desired speed by pressing the appropriate fan speed control button. The higher the fan speed is, the more air is delivered. Pressing the "OFF" button turns off the fan.

B670C01GK-AAT

Air Intake Control Switch (Without A.Q.S)

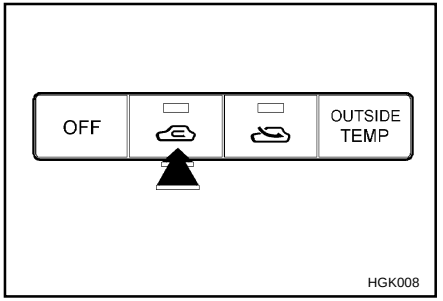

This is used to select fresh outside air or recirculation inside air.
To change the air intake control mode, (Fresh mode, Recirculation mode) push the control button.

FRESH MODE ( ) : The indicator light on the button goes on when the air intake control is fresh mode.

RECIRCULATION MODE ( ) : The indicator light on the button is illuminated when the air intake control is recirculation mode.

With the "Fresh" mode selected, air enters the vehicle from the outside and is heated or cooled according to the function selected.

With the "Recirculation" mode selected, air from within the passenger compartment will be drawn through the heating system and heated or cooled according to the function selected.

NOTE:

- **It should be noted that prolonged operation of the heating system in "recirculation" mode will give rise to fogging of the windshield and side windows and the air within the passenger compartment will become stale. In addition, prolonged use of the air conditioning with the "Recirculation" mode selected may result in the air within the passenger compartment becoming excessively dry.**
- **When the ignition switch is turned "ON" the air intake control will change to "" mode (regardless of switch position). This is normal operation. The air intake control operates in "AUTO" mode when turning the ignition to the ON position if the "AUTO" mode was used before shutting off the engine.**

B980C01GK-GAT

Air Intake Control Switch (With A.Q.S) (If Installed)

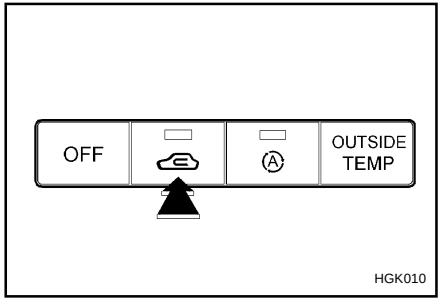

This is used to select fresh outside air or recirculate inside air automatically.

▭ : **OFF**

▬ : **ON**

▭ ▭ **Fresh mode :**

Air enters the vehicle from the outside and is heated or cooled according to the function selected.

▬ ▭ **Recirculation mode :**

Air from within the passenger compartment will be drawn through the heating system and heated or cooled according to the function selected.

▭ ▬ **Exhaust gas cutoff mode :**

Air enters the vehicle from the outside.
But if exhaust gas enters the vehicle from the outside, the exhaust gas cutoff mode (▭ ▬) is automatically converted to the ▬ ▬ mode, to prevent exhaust gas from entering the vehicle.

NOTE:

- **It should be noted that prolonged operation of the heating system in recirculation mode (▬ ▭) will give rise to misting of the windshield and side windows and the air within the passenger compartment will become stale. In addition, prolonged use of the air conditioning with the recirculation mode (▬ ▭) selected may result in the air within the passenger compartment becoming excessively dry.**
- **When the ignition switch is turned "ON" the air intake control will change to "Fresh" mode (regardless of switch position). This is normal operation. The air intake control is operated in "AUTO" mode when turning the ignition to the ON position if the "AUTO" mode was used before shutting off the engine.**

CAUTION:

If the windows fog up with the Recirculation or A.Q.S mode selected, set the air intake control to the Fresh air position or A.Q.S control to "OFF".

B980D01Y-AAT

Heating and Cooling System Off

Press the "OFF" button to stop the operation of the heating and cooling system.

B980E01GK-GAT

Air Flow Control

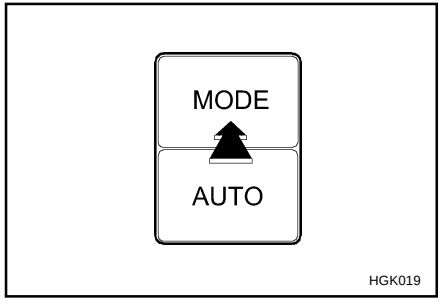

This is used to direct the flow of air. Air can be directed to the floor, dashboard outlets, or windshield. Four symbols are used to represent Face, Bi-Level, Floor and Floor-Defrost air position.

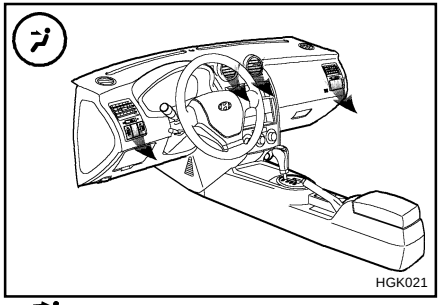

Face-Level

When selecting the "Face" mode, the indicator light will come on, causing air to be discharged through the face level vents.

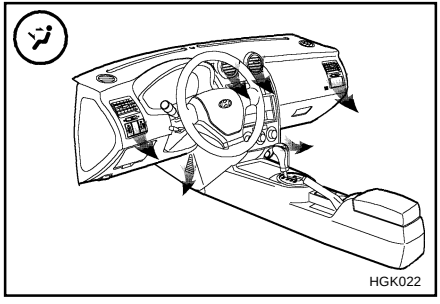

Bi-Level

When selecting the "Bi-Level" mode, the indicator light will come on and the air will be discharged through the face vents and the floor vents. This makes it possible to have cooler air from the dashboard vents and warmer air from the floor outlets at the same time.

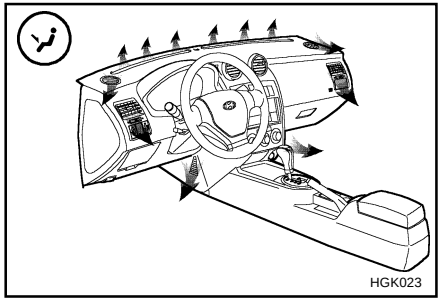

Floor-Level

When selecting the "Floor-Level" mode, the indicator light will come on and the air will be discharged through the floor vents, windshield defroster nozzle, side defroster nozzle, side ventilator.

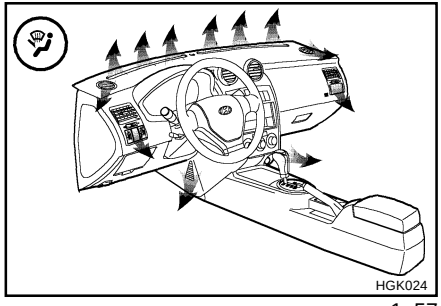

Floor-Defrost Level

When selecting the "Floor-Defrost" mode, the indicator light will come on and the air will be discharged through the windshield defrost nozzle, the floor vents, side defroster nozzle, side ventilator.

B980F02E-AAT

Defrost Switch

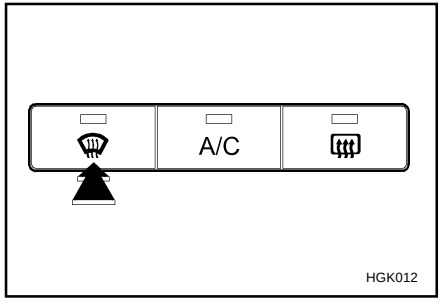

When the "Defrost" button is pressed, the "" mode will be automatically selected and the air will be discharged through the windshield defrost vents. To assist in defrosting, the air conditioning will operate if ambient temperature is higher than 38.3 °F (3.5 °C) and automatically turns off if the ambient temperature drops below 38.3 °F (3.5 °C).

B760A02GK-AAT

AIR FILTER (IN FRONT OF BLOWER UNIT) (If Installed)

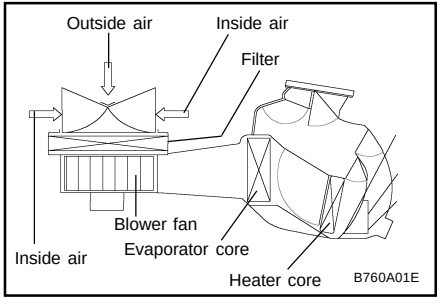

The air filter is located in front of the blower uniit behind the glove box.
It operates to decrease pollutants from entering the car and to filter the air.

Replacement instructions:

1. Open the glove box and remove the taping screws on the upper side of the glove box.
2. Remove the taping screws on the lower position of the glove box.
3. Remove the filter cover and replace the filter.
4. Installation is the reverse order of disassembly.

CAUTION:

- **Replace the filter every 12,000 miles (20,000 km) or once a year. If the car is being driven in severe conditions such as dusty, rough roads, more frequent air filter inspections and changes are required.**
- **When the air flow rate is suddenly decreased, it must be checked at an authorized dealer.**
- **If your vehicle is not equipped with this filter, it can be installed by your dealer. Check with your dealer for details.**

B750A02A-AAT

STEREO SOUND SYSTEM

How Car Audio Works

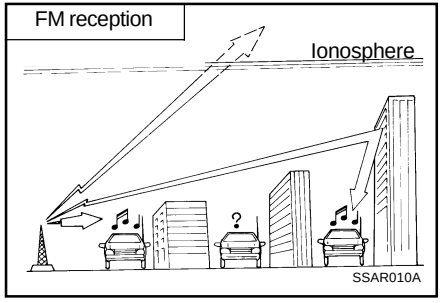

AM and FM radio signals are broadcast from transmitter towers located around your city. They are intercepted by the radio antenna on your car. This signal is then received by the radio and sent to your car speakers.
When a strong radio signal has reached your vehicle, the precise engineering of your audio system ensures high quality reproduction. However, in some cases the signal coming to your vehicle is not strong and clear. This can be due to factors such as the distance from the radio station, closeness of other strong radio stations or the presence of buildings, bridges or other large obstructions in the area.

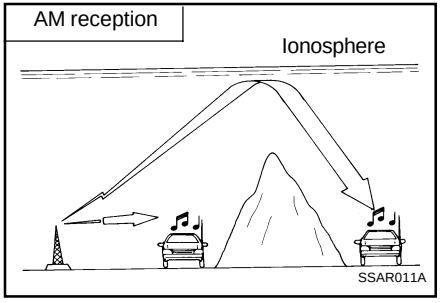

AM broadcasts can be received at greater distances than FM broadcasts. This is because AM radio waves are transmitted at low frequency. These long, low frequency radio waves can follow the curvature of the earth rather than travelling straight out into the atmosphere. In addition, they curve around obstructions so that they can provide better signal coverage.

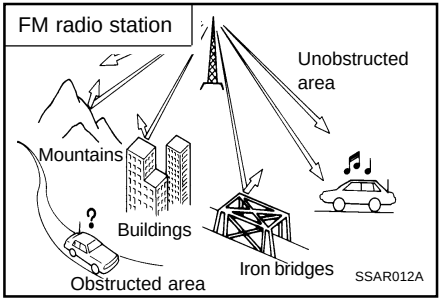

FM broadcasts are transmitted at high frequency and do not bend to follow the earth's surface. Because of this, FM broadcasts generally begin to fade at short distances from the station. Also, FM signals are easily affected by buildings, mountains, or other obstructions. These can result in certain listening conditions which might lead you to believe a problem exists with your radio. The following conditions are normal and do not indicate radio trouble:

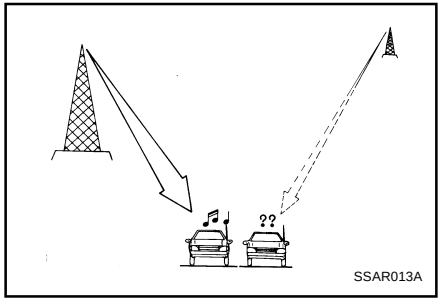

- Fading - As your car moves away from the radio station, the signal will weaken and sound will begin to fade. When this occurs, we suggest that you select another stronger station.
- Flutter/Static - Weak FM signals or large obstructions between the transmitter and your radio can disturb the signal causing static or fluttering noises to occur. Reducing the treble level may lessen this effect until the disturbance clears.

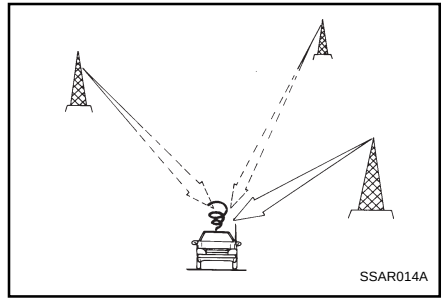

- Station Swapping - As a FM signal weakens, another more powerful signal near the same frequency may begin to play. This is because your radio is designed to lock onto the clearest signal. If this occurs, select another station with a stronger signal.
- Multi-Path Cancellation - Radio signals being received from several directions can cause distortion or fluttering. This can be caused by a direct and reflected signal from the same station, or by signals from two stations with close frequencies. If this occurs, select another station until the condition has passed.

B750B02Y-AAT

Using a cellular phone or a two-way radio

When a cellular phone is used inside the vehicle, noise may be produced from the audio equipment. This does not mean that something is wrong with the audio equipment. In such a case, use the cellular phone at a place as far as possible from the audio equipment.

CAUTION:

When using a communication system such as a cellular phone or a radio set inside the vehicle, a separate external antenna must be fitted. When a cellular phone or a radio set is used with an internal antenna alone, it may interfere with the vehicle's electrical system and adversely affect safe operation of the vehicle.

WARNING:

Don't use a cellular phone when you are driving, you must stop at a safe place to use a cellular phone.

H240A01O-GAT

STEREO RADIO OPERATION (H250) (If Installed)

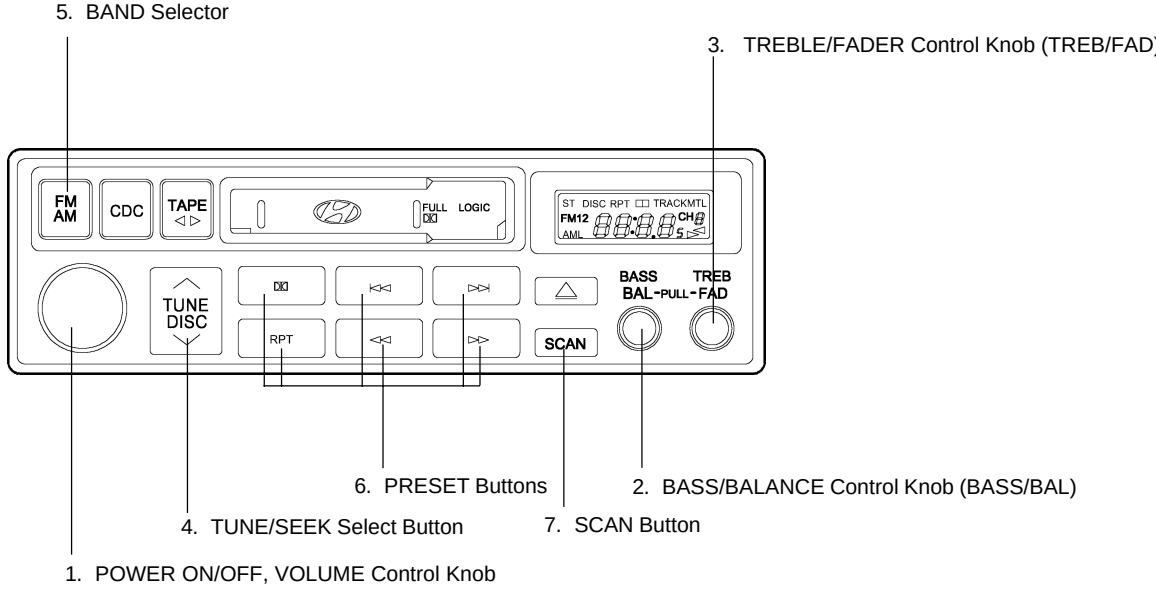

H250A01GK

H240B03O-GAT

1. POWER ON-OFF Control Knob

The radio unit may be operated when the ignition key is in the “ACC” or “ON” position. Press the knob to switch the power on. The LCD shows the radio frequency in the radio mode or the tape direction indicator in the tape mode. To switch the power off, press the knob again.

VOLUME Control

Rotate the knob clockwise to increase the volume and turn the knob counterclockwise to reduce the volume.

2. BASS Control Knob

Press to pop the knob out and turn to the left or right for the desired bass tone.

BAL (Balance Control) Knob

Pull the bass control knob further out. Turn the control knob clockwise to emphasize right speaker sound. (Left speaker sound will be attenuated)
When the control knob is turned counterclockwise, left speaker sound will be emphasized. (Right speaker sound will be attenuated)

3. TREB (Treble Control) Knob

Press to pop the knob out and turn to the left or right for the desired treble tone.

FAD (Fader Control) Knob

Pull the treble control knob further out.
Turn the control knob counterclockwise to emphasize front speaker sound. (Rear speaker sound will be attenuated)
When the control knob is turned clockwise, rear speaker sound will be emphasized.
(Front speaker sound will be attenuated)

4. TUNE (Manual) Select Button

Press the side or side to increase or to decrease the frequency. Press either button and hold down to continuously scroll. Release button once the desired station is reached.

SEEK Operation (Automatic Channel Selection)

Press the TUNE select button 1 sec or more.Releasing will automatically tune to the next available station with a beep sound.
When the ∧side is pressed longer than 1 second, releasing will automatically tune to the next higher frequency and when the ∨side is pressed longer than 1 second, releasing will automatically tune to the next lower frequency.

5. BAND Selector

Pressing the FM/AM button changes the AM, FM1 and FM2 bands. The mode selected is displayed on LCD.

6. PRESET STATION SELECT Button

Six (6) stations for AM, FM and FM2 respectively can be preset in the electronic memory circuit on this unit.

HOW TO PRESET STATIONS

Six AM and twelve FM stations may be programmed into the memory of the radio. Then, by simply pressing the band select button and/or one of the six station select buttons, you may recall any of these stations instantly. To program the stations, follow these steps:

- Press band selector to set the band for AM, FM, or FM2.
- Select the desired station to be stored by seek or manual tuning.
- Determine the preset station select button you wish to use to access that station.
- Press the station select button for more than two seconds. A select button indicator will show in the display indicating which select button you have depressed. The frequency display will flash after it has been stored into the memory with a beep sound. You should then release the button, and proceed to program the next desired station. A total of 18 stations can be programmed by selecting one AM and two FM stations per button.
- When completed, any preset station may be recalled by selecting AM, FM or FM2 band and the appropriate station button.

7. SCAN Button

When the scan button is pressed, the frequency will increase and the receivable stations will be tuned in one after another, receiving each station for 5 seconds. To stop scanning, press the scan button again.

H240C01O-GAT

CASSETTE TAPE PLAYER OPERATION (H250) (If Installed)

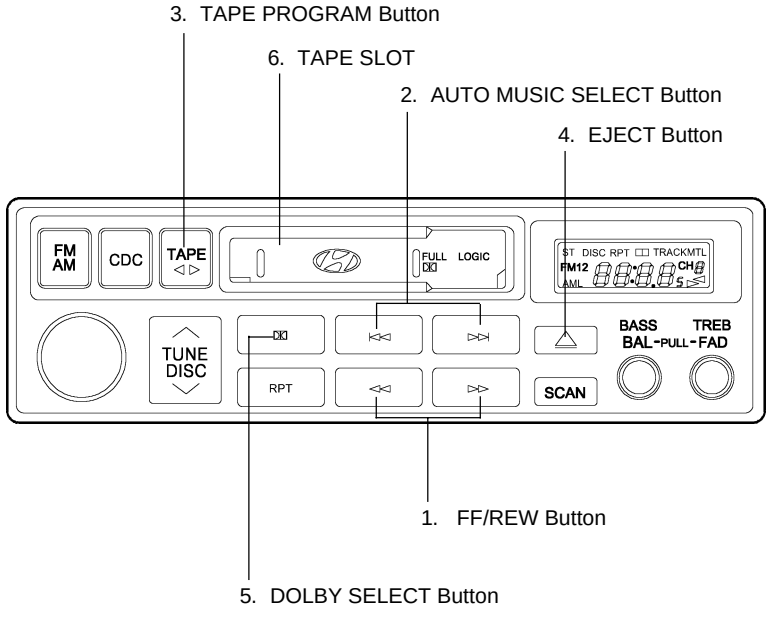

H250A01GK

H240A03O-GAT

1. FF/REW Button

- o The FF (fast forward tape winding) starts when the ▶▶ button is pressed during the PLAY or REW.
- o The play starts when the ▶▶ button is pressed again during the FF.
- o The REW (rewinding) starts when the ◀◀ button is pressed during the PLAY or FF.
- o The play starts when the ◀◀ button is pressed again during the REW.

2. AUTO MUSIC SELECT Button

Press the button to find the starting point of each song in a prerecorded music tape.
The quiet space between songs (must have at least a 4 sec. gap) can be accepted by the AUTO MUSIC SELECT button.

- o Pressing the ▶▶I button will play the beginning of the next music segment.
- o Pressing the I◀◀ button will start replay at the beginning of the music just listened to.

3. TAPE PROGRAM Button

This allows you to play the reverse side of the tape by merely depressing the program button. An arrow will appear in the display to show tape direction.

NOTE:

When tape operation is abnormal or ER8 fault code is displayed, press the eject button more than 5 seconds to reset the deck function.

4. EJECT Button

- o When the EJECT button is pressed with the cassette loaded, the cassette is ejected.
- o When the EJECT button is pressed during the FF/REW, the cassette is ejected.

5. DOLBY SELECT Button

If you get background noise during PLAY, you can reduce this considerably by merely pressing DOLBY SELECT button.
If you want to release, press the button again.

B250A01GK-GAT

CD AUTO CHANGER (H250) (If Installed)

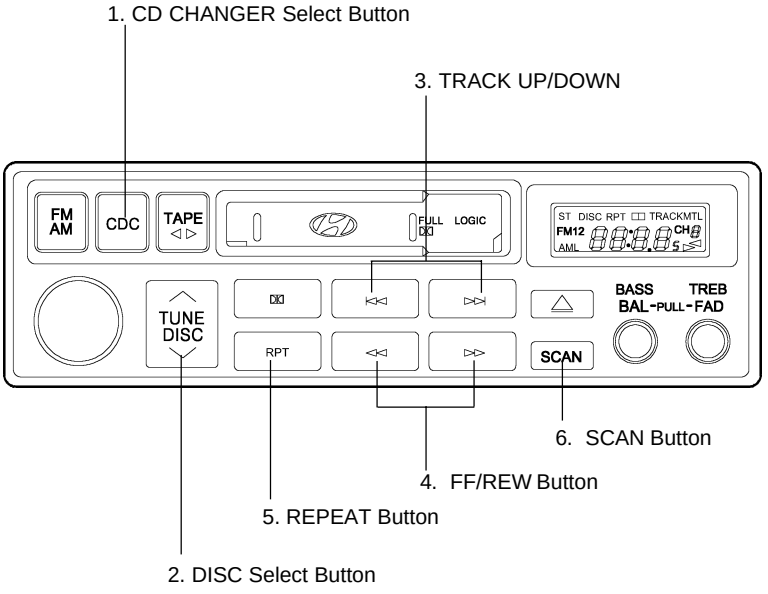

H250A01GK

B260F01GK-AAT

The CD auto changer is located in the right side of the quarter trim.

o To use the CD auto changer.

1. Open the sliding lid of the CD auto changer.
2. To eject the compact disc magazine, press the EJECT button located inside the CD auto changer.
3. Insert the discs into the magazine.
4. Push the magazine into the CD auto changer and close the sliding lid.

o The CD auto changer can be used when the ignition switch is in either the "ON" or "ACC" position.

1. CD Select Button

When the CD changer magazine contains discs, press the "CDC" button and the CD changer can be used even if the radio is being used. The Hyundai CD changer can hold up to eight discs. The disc number will be lit, and the track number, and elapsed time will be displayed.

2. DISC Select Button

To select the CD you want, push " TUNE DISC " to change the disc number.

3. TRACK UP/DOWN

o The desired track on the disc currently being played can be selected using the track number.

o Press ▸▸ once to skip forward to the beginning of the next track. Press ◂◂ once to skip back to the beginning of the track.

4. FF/REW (▸▸ / ◂◂)

If you want to fast forward or reverse through the compact disc track, push and hold in the FF (▸▸) or REW (◂◂) button.

When you release the button, the compact disc player will resume playing.

5. REPEAT

o To repeat the music you are listening to, press the RPT button. To cancel , press again.

o If you do not release RPT operation when the track ends, it will automatically be replayed.
This process will be continued until you push the button again.

6. SCAN Button

o Press the SCAN button to playback the first 10 seconds of each track.

o Press the SCAN button again within 10 sec. for the desired track.

NOTE:

- **o When replacing the fuse, replace it with a fuse having the correct capacity.**
- **o This equipment is designed to be used only in a 12 volt DC battery system with negative ground.**
- **o This unit is made of precision parts. Do not attempt to disassemble or adjust any parts.**
- **o When driving your vehicle, be sure to keep the volume of the unit set low enough to allow you to hear sounds coming from the outside.**

H260A01O-AAT

STEREO RADIO OPERATION (H260) (If Installed)

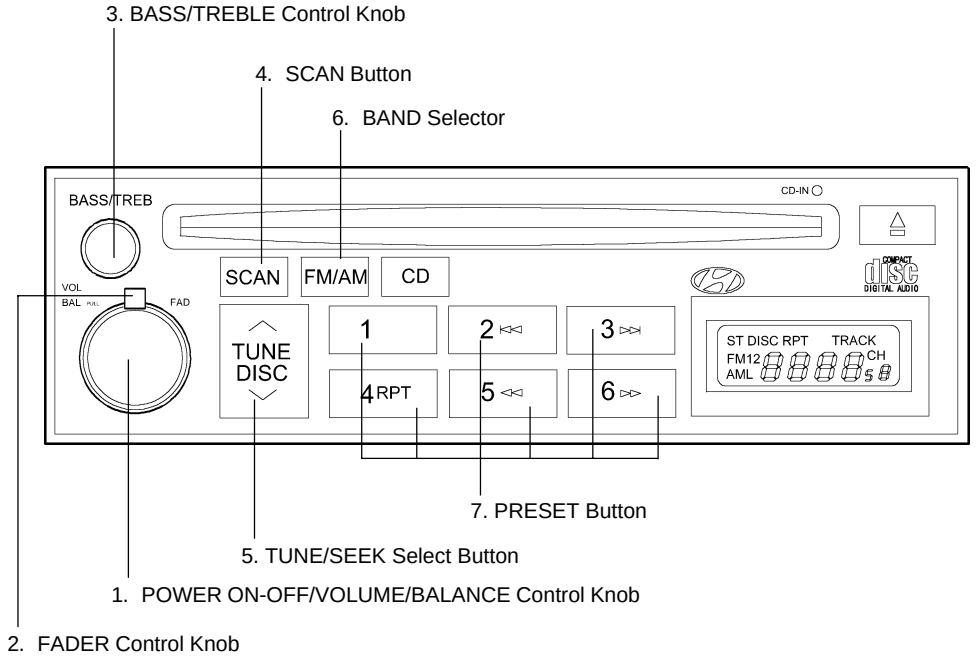

H260A01O

H260B03E-AAT

1. POWER ON-OFF Control Knob

The radio unit may be operated when the ignition key is in the “ACC” or “ON” position. Press the knob to switch the power on. The LCD shows the radio frequency in the radio mode or the CD track indicator in either the CD mode or CD AUTO CHANGER mode. To switch the power off, press the knob again.

VOLUME Control

Rotate the knob clockwise to increase the volume and turn the knob counterclockwise to reduce the volume.

BALANCE Control

Pull and turn the control knob clockwise to emphasize right speaker sound (Left speaker sound will be attenuated). When the control knob is turned counterclockwise, left speaker sound will be emphasized. (Right speaker sound will be attenuated)

2. FAD (Fader Control) Knob

Turn the control knob counterclockwise to emphasize front speaker sound. (Rear speaker sound will be attenuated) When the control knob is turned clockwise, rear speaker sound will be emphasized. (Front speaker sound will be attenuated)

3. BASS Control Knob

Press to pop the knob out and turn to the left or right for the desired bass tone.

TREB (Treble Control) Knob

Pull the bass control knob further out. Turn to the left or right for the desired treble tone.

4. SCAN Button

When the scan button is pressed, the frequency will increase and the receivable stations will be tuned in one after another, receiving each station for 5 seconds. To stop scanning, press the scan button again.

5. TUNE (Manual) Select Button

Press the (∧) side or (∨) side to increase or to decrease the frequency. Press either button and hold down to continuously scroll. Release button once the desired station is reached.

SEEK Operation (Automatic Channel Selection)

Press the TUNE select button for 1 sec or more. Releasing it will automatically tune to the next available station with a beep sound.
When the (∧) side is pressed longer than 1 second, releasing will automatically tune to the next higher frequency and when the (∨) side is pressed longer than 1 second, releasing will automatically tune to the next lower frequency.

6. BAND Selector

Pressing the FM/AM button changes the AM, FM1 and FM2 bands. The mode selected is displayed on LCD.

7. PRESET STATION SELECT Button

Six (6) stations for AM, FM or FM2 respectively can be preset in the electronic memory circuit on this unit.

HOW TO PRESET STATIONS

Six AM and twelve FM stations may be programmed into the memory of the radio. Then, by simply pressing the band select button and/or one of the six station select buttons, you may recall any of these stations instantly. To program the stations, follow these steps:

- Press band selector to set the band for AM, FM or FM2.
- Select the desired station to be stored by seek, scan or manual tuning.
- Determine the preset station select button you wish to use to access that station.
- Press the station select button for more than two seconds. A select button indicator will show in the display indicating which select button you have depressed. The frequency display will flash after it has been stored into the memory.

You should then release the button, and proceed to program the next desired station. A total of 18 stations can be programmed by selecting one AM and two FM stations per button.

- When completed, any preset station may be recalled by selecting AM, FM or FM2 band and the appropriate station button.

H260B01O-AAT

COMPACT DISC PLAYER OPERATION (H260) (If Installed)

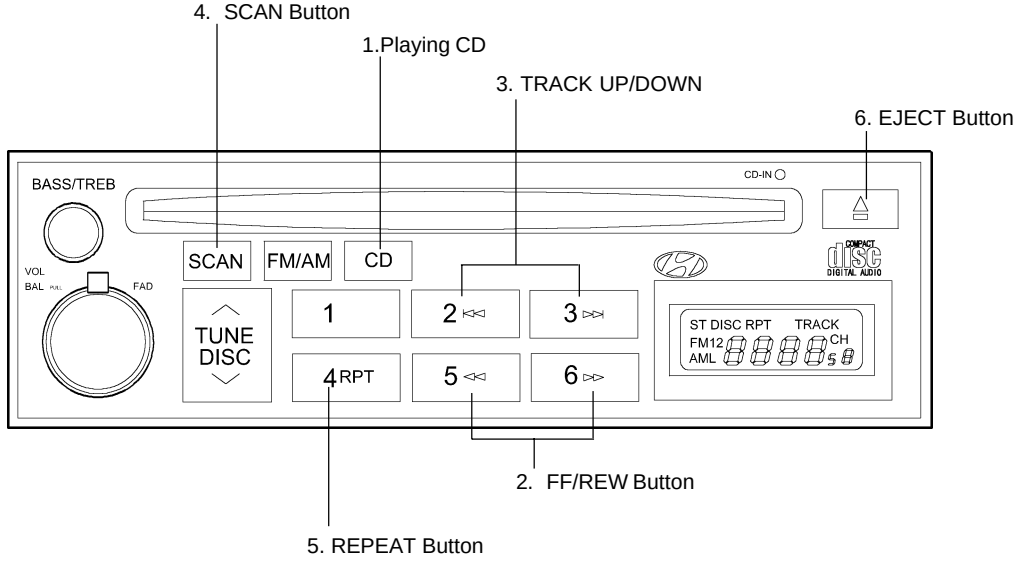

H260A01O

B260D01O-AAT

1. Playing CD

- o Insert the CD with the label facing upward.
- o Insert the CD to start CD playback, during radio operation.
- o When a disc is in the CD deck, if you press the play button, the CD player will begin playing even if the radio is being used.
- o The CD player can be used when the ignition switch is in either the "ON" or "ACC" position.

2. FF/REW (▸▸/◂◂)

If you want to fast forward or reverse through the compact disc track, push and hold in the FF (▸▸) or REW (◂◂) button.
When you release the button, the compact disc player will resume playing.

3. TRACK UP/DOWN

- o The desired track on the disc currently being played can be selected using the track number.
- o Press ▸▸I once to skip forward to the beginning of the next track. Press I◂◂ once to skip back to the beginning of the track.

4. SCAN Button

- o Press the SCAN button to playback the first 10 seconds of each track.
- o Press the SCAN button again within 10 sec. for the desired track.

5. REPEAT Button

- o To repeat the music you are listening to, press the RPT button. To cancel , press again.
- o If you do not release RPT operation, when the track ends, it will automatically be replayed.
  This process will be continued until you push the button again.

6. EJECT Button

When the EJECT button ⏏ is pressed with the CD loaded, the CD is ejected.

NOTE:

- **o To assure proper operation of the unit, keep the vehicle interior temperature within a normal range by using the vehicle's air conditioning or heating system.**
- **o When replacing the fuse, replace it with a fuse having the correct capacity.**
- **o The preset station frequencies are all erased when the car battery is disconnected. Therefore, all data will have to be set again if this should occur.**
- **o Do not add any oil to the rotating parts. Keep magnets, screwdrivers and other metallic objects away from the tape mechanism and head.**
- **o This equipment is designed to be used only in a 12 volt DC battery system with negative ground.**
- **o This unit is made of precision parts. Do not attempt to disassemble or adjust any parts.**
- **o When driving your vehicle, be sure to keep the volume of the unit set low enough to allow you to hear sounds coming from the outside.**
- **o Do not expose this equipment (including the speakers) to water or excessive moisture.**

B260E01E-AAT

CD AUTO CHANGER (H260) (If Installed)

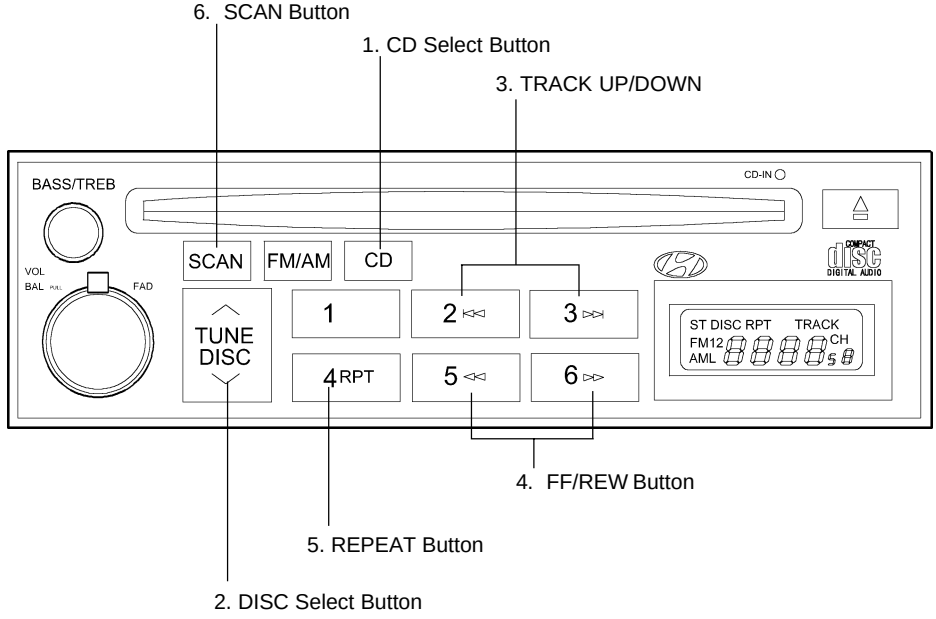

H260A01O

B260F01GK-AAT

The CD auto changer is located in the right side of the quater trim.

o To use the CD auto changer.

1. Open the sliding lid of the CD auto changer.
2. To eject the compact disc magazine, press the EJECT button located inside the CD auto changer.
3. Insert the discs into the magazine.
4. Push the magazine into the CD auto changer and close the sliding lid.

o The CD auto changer can be used when the ignition switch is in either the "ON" or "ACC" position.

1. CD Select Button

When the CD changer magazine contains discs, press the "CD" button and the CD changer can be used even if the radio is being used. The Hyundai CD changer can hold up to eight discs. The disc number will be lit, and the track number, and elapsed time will be displayed.

2. DISC Select Button

To select the CD you want, push " TUNE DISC " to change the disc number.

3. TRACK UP/DOWN

o The desired track on the disc currently being played can be selected using the track number.

o Press ▸▸ once to skip forward to the beginning of the next track. Press ◂◂ once to skip back to the beginning of the track.

4. FF/REW (▸▸/◂◂)

If you want to fast forward or reverse through the compact disc track, push and hold in the FF (▸▸) or REW (◂◂) button.

When you release the button, the compact disc player will resume playing.

5. REPEAT

o To repeat the music you are listening to, press the RPT button. To cancel, press again.

o If you do not release RPT operation when the track ends, it will automatically be replayed.
This process will be continued until you push the button again.

6. SCAN Button

o Press the SCAN button to playback the first 10 seconds of each track.

o Press the SCAN button again within 10 sec. for the desired track.

NOTE:

- **o When replacing the fuse, replace it with a fuse having the correct capacity.**
- **o This equipment is designed to be used only in a 12 volt DC battery system with negative ground.**
- **o This unit is made of precision parts. Do not attempt to disassemble or adjust any parts.**
- **o When driving your vehicle, be sure to keep the volume of the unit set low enough to allow you to hear sounds coming from the outside.**

H290A01FC-GAT

STEREO RADIO OPERATION (H280) (If Installed)

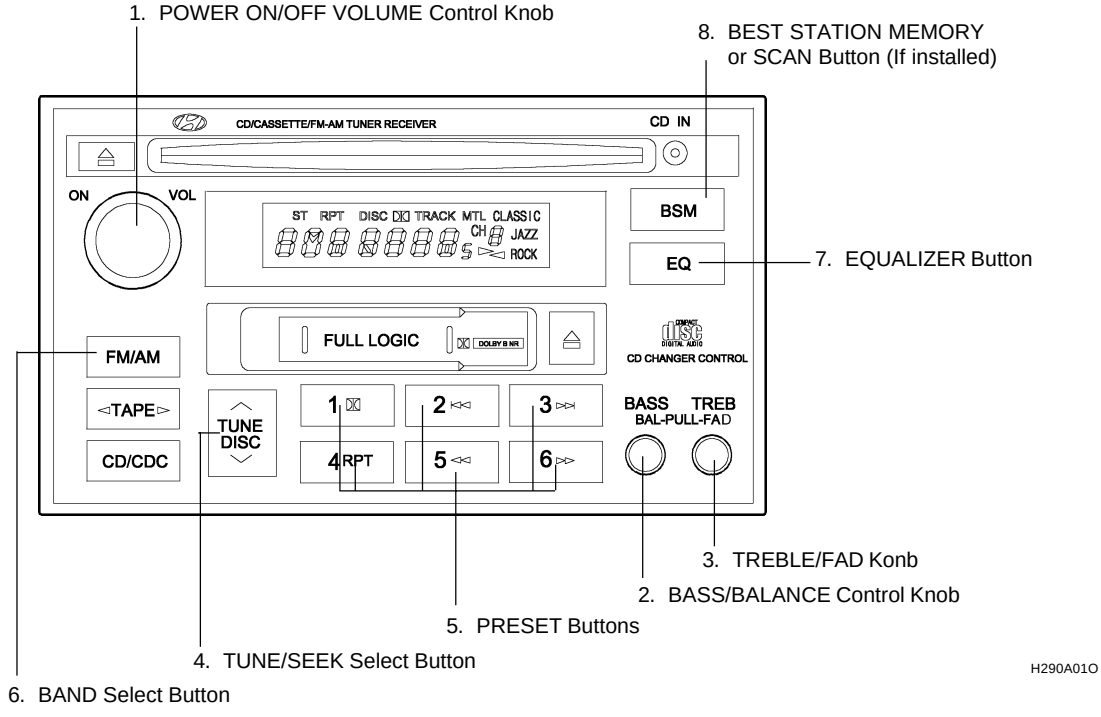

H290B03E-GAT

1. POWER ON-OFF Control Knob

The radio unit may be operated when the ignition key is in the "ACC" or "ON" position. Press the button to switch the power on. The display shows the radio frequency in the radio mode, the tape direction indicator in the tape mode or CD track in either the CD mode or CD AUTO CHANGER mode. To switch the power off, press the button again.

VOLUME Control

Rotate the knob clockwise to increase the volume and turn the knob counterclockwise to reduce the volume.

2. BASS/BALANCE Control Knob

BASS Control Knob

Press to pop the knob out. To increase the bass, rotate the knob clockwise, while to decrease the bass, rotate the knob counterclockwise.

BALANCE Control knob

Pull the Bass control knob out further. Rotate the knob clockwise to emphasize right speaker sound. (Left speaker sound will be attenuated) When the control knob is turned counterclockwise, left speaker sound will be emphasized (Right speaker sound will be attenuated).

3. TREBLE/FAD Knob

TREBLE Control Knob

Press to pop the knob out and turn to the left or right for the desired treble tone.

FAD (Fader Control) Knob

Pull the Treble control knob out further. Turn the control knob counterclockwise to emphasize front speaker sound. (Rear speaker sound will be attenuated) When the control knob is turned clockwise, rear speaker sound will be emphasized. (Front speaker sound will be attenuated)

4. TUNE (Manual) Select Button

Press the (∧) side or (∨) side to increase or to decrease the frequency. Press either button and hold down to continuously scroll. Release button once the desired station is reached.

SEEK Operation (Automatic Channel Selection)

Press the TUNE select button for 0.5 sec or more. Releasing it will automatically tune to the next available station with a beep sound.
When the (∧) side is pressed longer than 0.5 second, releasing will automatically tune to the next higher frequency and when the (∨) side is pressed longer than 0.5 second, releasing will automatically tune to the next lower frequency.

5. PRESET STATION Select Buttons

Six (6) stations for AM, FM and FM2 respectively can be preset in the electronic memory circuit.

HOW TO PRESET STATIONS

Six AM and twelve FM stations may be programmed into the memory of the radio. Then, by simply pressing the band select button and/or one of the six station select buttons, you may recall any of these stations instantly. To program the stations, follow these steps:

- Press band selector to set the band for AM, FM or FM2.
- Select the desired station to be stored by seek or manual tuning.
- Determine the preset station select button you wish to use to access that station.
- Press the station select button for more than two seconds. A select button indicator will show in the display indicating which select button you have depressed. The frequency display will flash after it has been stored into the memory with beep sound. You should then release the button, and proceed to program the next desired station. A total of 18 stations can be programmed by selecting one AM and two FM station per button.
- When completed, any preset station may be recalled by selecting AM, FM or FM2 band and the appropriate station button.

6. BAND Selector

Pressing the FM/AM button changes the AM, FM1 and FM2 bands. The mode selected is shown on the display.

7. EQUALIZER Button

Press the EQ button to select the CLASSIC, JAZZ, ROCK and DEFEAT MODE for the desired tone quality. Each press of the button changes the display as follows;

CLASSIC → JAZZ → ROCK → DEFEAT

8. Best Station Memory Button (BSM) (If installed)

When the BSM button is pressed for two seconds or longer, the six channels from the highest field intensity are selected next and stored in memory. The stations selected are stored in the sequence frequency from the first preset key.

SCAN Button (If installed)

When the scan button is pressed, the frequency will increase and the receivable stations will be tuned in one after another, receiving each station for 5 seconds. To stop scanning, press the scan button again.

H290C01FC-GAT

CASSETTE TAPE PLAYER OPERATION (H280) (If Installed)

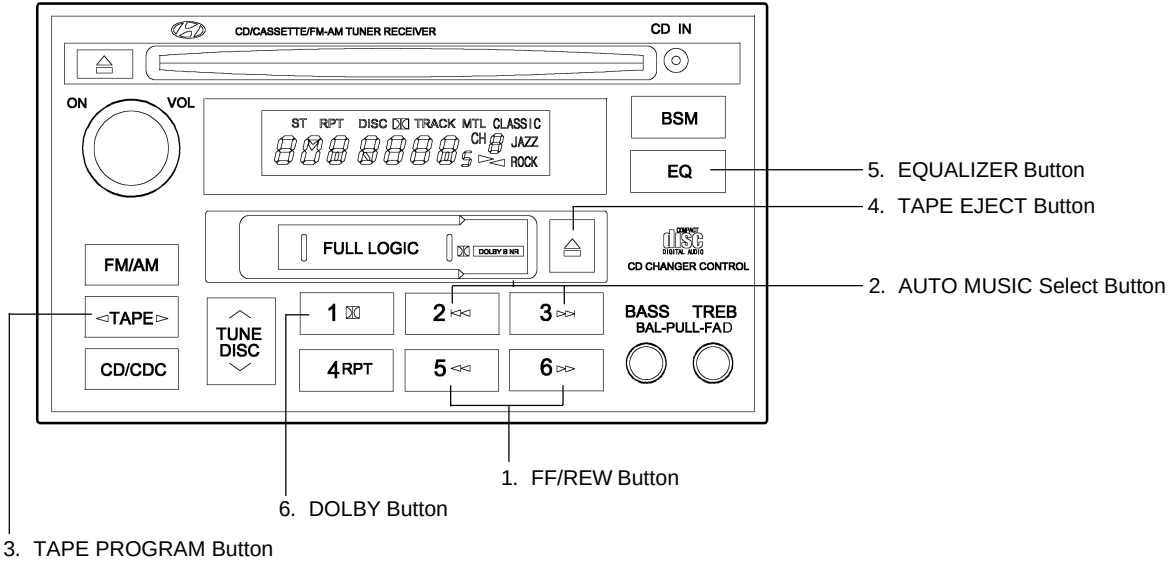

H290A01O

H290D01O-GAT

1. FF/REW Button

- o Fast forward tape winding starts when the FF (▶▶) button is pressed during the PLAY or REW mode.
- o Tape play starts when the FF (▶▶) button is pressed again during the FF mode.
- o Tape rewinding starts when the REW (◀◀) button is pressed during the PLAY or FF mode.
- o Tape play starts when the REW (◀◀) button pressed again during the REW mode.

2. AUTO MUSIC Select Button

Press the button to find the starting point of each song in a prerecorded music tape. The quiet space between songs (must have at least a 4 sec. gap) can be accepted by the AUTO MUSIC Select button.

- o Pressing the ▶▶I button will play the beginning of the next music segment.
- o Pressing the I◀◀ button will start replay at the beginning of the music just listened to.

3. TAPE PROGRAM Button

This allows you to play the reverse side of the tape by merely depressing the program button. An arrow will appear in the display to show tape direction.

4. TAPE EJECT button

- o When the ⏏ button is pressed with the cassette loaded, the cassette is ejected.
- o When the ⏏ button is pressed during the FF/REW mode, the cassette is ejected.

5. EQ Button

Press the EQ button to select the CLASSIC, JAZZ, ROCK and DEFEAT MODE for the desired tone quality. Each press of the button changes the display as follows;

CLASSIC → JAZZ → ROCK → DEFEAT

6. DOLBY Button

If you get background noise during tape PLAY, you can reduce this considerably by merely pressing the DOLBY button. If you want to cancel the DOLBY feature, press the button again.

H290E01FC-GAT

COMPACT DISC PLAYER OPERATION (H280) (If Installed)

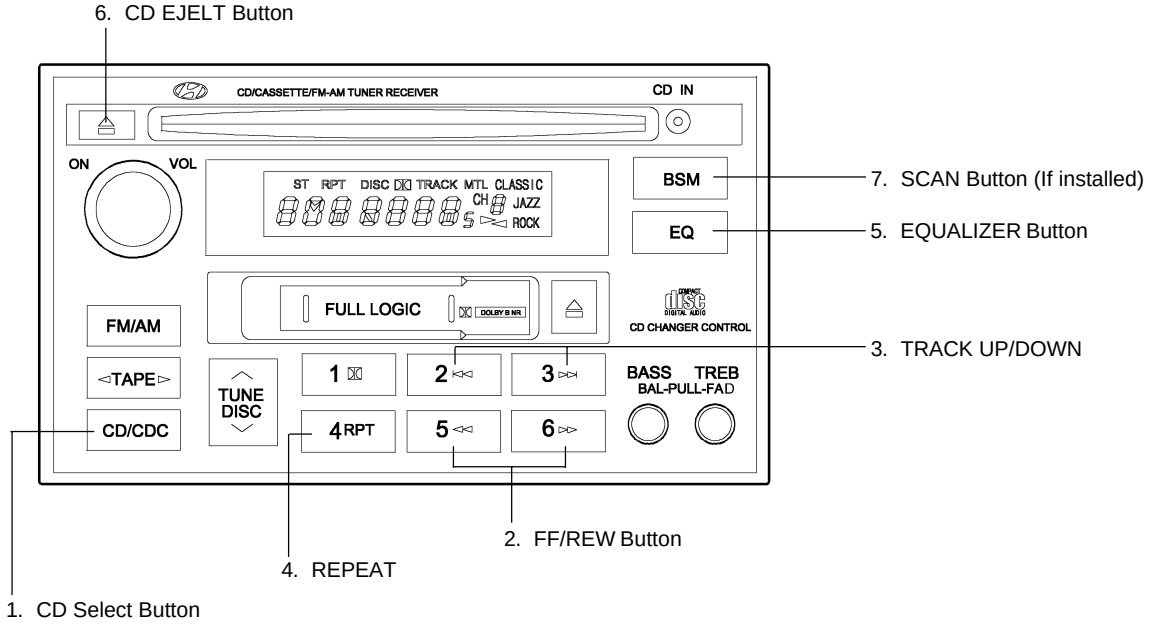

H290A01O

H290F01O-GAT

1. CD Select Button

- o Insert the CD with the label facing upward.
- o Insert the CD to start CD playback, during radio operation or cassette tape playing.
- o When a disc is in the CD deck, if you press the play button the CD player will begin playing even if the radio or cassette player is being used.
- o The CD player can be used when the ignition switch is in either the "ON" or "ACC" position.

2. FF/REW (▸▸/◂◂)

If you want to fast forward or reverse through the compact disc track, push and hold in the FF (▸▸) or REW (◂◂) button.
When you release the button, the compact disc player will resume playing.

3. TRACK UP/DOWN

- o The desired track on the disc currently being played can be selected using the track number.
- o Press ▸▸| button once to skip forward to the beginning of the next track. Press |◂◂ button once to skip back to the beginning of the track.

4. REPEAT

- o To repeat the music you are listening to, press the RPT button. To cancel, press again.
- o If you do not release RPT operation when the track ends, it will automatically be replayed.
  This process will be continued until you push the button again.

5. EQUALIZER Button

Press the EQ button to select the CLASSIC, JAZZ, ROCK and DEFEAT MODE for the desired tone quality. Each press of the button changes the display as follows;

CLASSIC → JAZZ → ROCK → DEFEAT

6. CD EJECT Button

When the ⏏ button is pressed with the CD loaded, the CD is ejected.

7. SCAN Button (If installed)

- o Press the SCAN button to playback the first 10 seconds of each track.
- o Press the SCAN button again within 10 sec. for the desired track.

NOTE:

- **o To assure proper operation of the unit, keep the vehicle interior temperature within a normal range by using the vehicle's air conditioning or heating system.**
- **o When replacing the fuse, replace it with a fuse having the correct capacity.**
- **o The preset station frequencies are all erased when the car battery is disconnected. Therefore, all data will have to be set again if this should occur.**
- **o Do not add any oil to the rotating parts. Keep magnets, screwdrivers and other metallic objects away from the tape mechanism and head.**
- **o This equipment is designed to be used only in a 12 volt DC battery system with negative ground.**
- **o This unit is made of precision parts. Do not attempt to disassemble or adjust any parts.**
- **o When driving your vehicle, be sure to keep the volume of the unit set low enough to allow you to hear sounds coming from the outside.**
- **o Do not expose this equipment (including the speakers and tape) to water or excessive moisture.**

H290G01FC-GAT

CD AUTO CHANGER (H280) (If Installed)

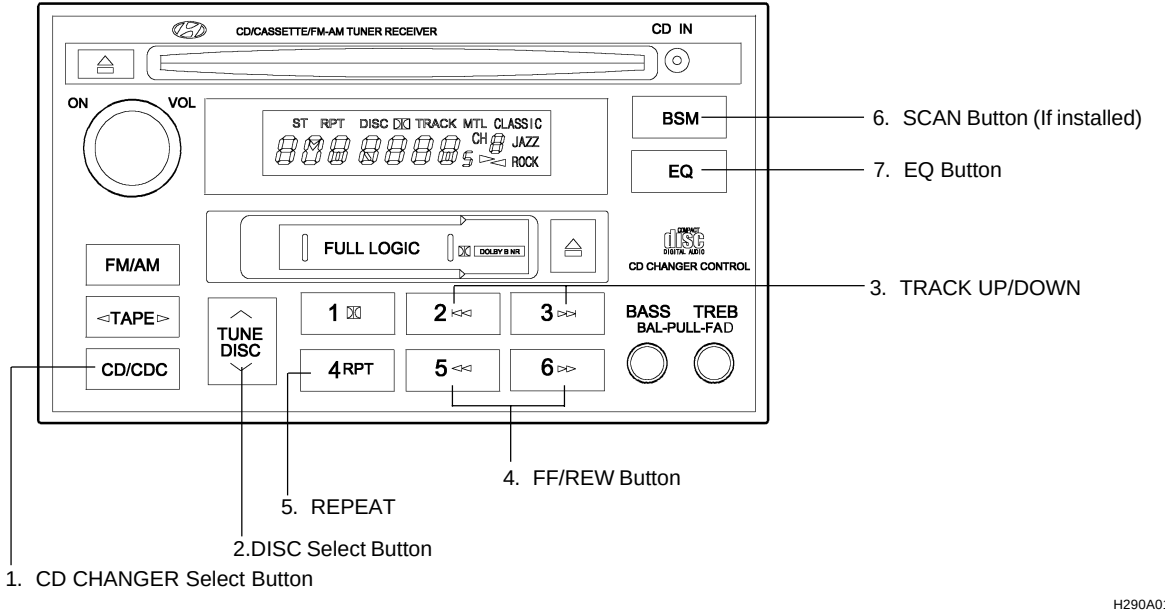

H290A01O

B290H01GK-GAT

The CD auto changer is located in the right side of the quater trim.

o To use the CD auto changer.

1. Open the sliding lid of the CD auto changer.
2. To eject the compact disc magazine, press the EJECT button located inside the CD auto changer.
3. Insert the discs into the magazine.
4. Push the magazine into the CD auto changer and close the sliding lid.

o The CD auto changer can be used when the ignition switch is in either "ON" or "ACC" position.

1. CD CHANGER Select Button

When the CD changer magazine contains discs, press the "CD/CDC" button and the CD changer can be used even if the radio or cassette player is being used. The Hyundai CD changer can hold up to eight discs. The disc number will be lit, and the track number, and elapsed time will be displayed.

2. DISC Select Button

To select the CD you want, push " TUNE DISC " to change the disc number.

3. TRACK UP/DOWN

o The desired track on the disc currently being played can be selected using the track number.

o Press ▶▶ once to skip forward to the beginning of the next track. Press ◀◀ once to skip back to the beginning of the track.

4. FF/REW (▶▶/◀◀)

If you want to fast forward or reverse through the compact disc track, push and hold in the FF (▶▶) or REW (◀◀) button.
When you release the button, the compact disc player will resume playing.

5. REPEAT

o To repeat the music you are listening to, press the RPT button. To cancel, press again.

o If you do not release RPT operation when the track ends, it will automatically be replayed.
This process will be continued until you push the button again.

6. SCAN Button (If installed)

o Press the SCAN button to playback the first 10 seconds of each track.

o Press the SCAN button again within 10 sec. for the desired track.

7. EQ Button

Press the EQ button to select the CLASSIC, JAZZ, ROCK and DEFEAT MODE for the desired tone quality. Each press of the button changes the display as follows;

CLASSIC → JAZZ → ROCK → DEFEAT

NOTE:

- **o When replacing the fuse, replace it with a fuse having the correct capacity.**
- **o This equipment is designed to be used only in a 12 volt DC battery system with negative ground.**
- **o This unit is made of precision parts. Do not attempt to disassemble or adjust any parts.**
- **o When driving your vehicle, be sure to keep the volume of the unit set low enough to allow you to hear sounds coming from the outside.**

B890A01Y-AAT

AUDIO FAULT CODE

If you see any error indication in the display while using the CD or Tape mode, find the cause in the chart below. If you cannot clear the error indication, take the car to your Hyundai dealer.

INDICATION	CAUSE	SOLUTION
Er2	CDP DECK MECHANICAL ERROR (EJECT ERROR, LOADING ERROR)	AFTER RESETTING THE AUDIO, PUSH THE EJECT BUTTON. IF DISC IS NOT EJECTED, CONSULT YOUR HYUNDAI DEALER.
Er3	FOCUS ERROR DATA READ ERROR	MAKE SURE THE DISC IS NOT SCRATCHED OR DAMAGED. PRESS THE EJECT BUTTON AND PULL OUT THE DISC. THEN INSERT A NORMAL CD DISC.
Er6	DISC ERROR	CHECK IF THE DISC IS INSERTED CORRECTLY IN THE CD PLAYER. MAKE SURE THE DISC IS NOT SCRATCHED OR DAMAGED.
Er8	TAPE DECK ERROR TAPE EJECT ERROR	AFTER RESETTING THE AUDIO, PUSH THE EJECT BUTTON. IF TAPE IS NOT EJECTED, CONSULT YOUR HYUNDAI DEALER.
HHH	TEMPERATURE IS TOO HIGH	FAULT CODE WILL RESET AUTOMATICALLY WHEN THE TEMPERATURE RETURNS TO NORMAL.
no CD	NO DISC IN MAGAZINE NO CD MAGAZINE IN THE AUTO CHANGER	INSERT DISC IN MAGAZINE OR INSERT CD MAGAZINE IN THE AUTO CHANGER.

B850A01F-AAT

CARE OF DISC

Proper Handling

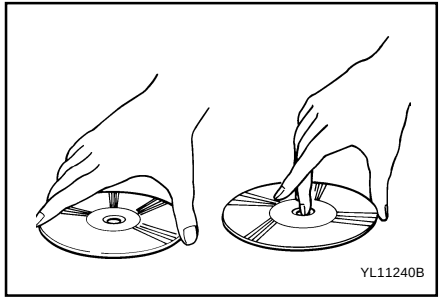

Handle your disc as shown. Do not drop the disc. Hold the disc so you will not leave fingerprints on the surface. If the surface is scratched, it may cause the pickup to skip signal tracks. Do not affix tape, paper, or gummed labels on the disc. Do not write on the disc.

Damaged Disc

Do not attempt to play damaged, warped or cracked discs. These could severely damage the playback mechanism.

Storage

When not in use, place your discs in their individual case and store them in a cool place away from the sun, heat, and dust.

Do not grip or pull out the disc with your hand while the disc is being pulled into the unit by the self loading mechanism.

Do not pull the unit from the dash immediately after a disc is inserted or the eject switch has been pressed. If the unit is pulled out before an operation is completed, the disc will be unstable in the unit and may be damaged.

Do not attempt to insert a disc into the unit when the unit is out of the dash or the power is off.

Keep Your Discs Clean

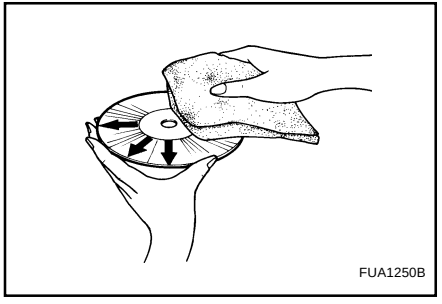

Fingerprints, dust, or soil on the surface of a disc could cause the pickup to skip signal tracks. Wipe the surface clean with a clean soft cloth. If the surface is heavily soiled, dampen a clean soft cloth in a solution of mild neutral detergent to wipe it clean. See drawing.

B860A01A-AAT

CARE OF CASSETTE TAPES

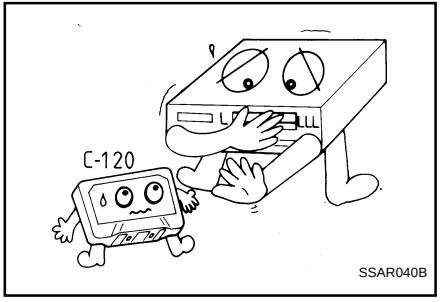

Proper care of your cassette tapes will extend the tape life and increase your listening enjoyment. Always protect your tapes and cassette cases from direct sunlight, severely cold and dusty conditions. When not in use, cassettes should always be stored in the original protective cassette case. When the vehicle is very hot or cold, allow the interior temperature to become more comfortable before listening to your cassettes.

- o Never leave a cassette inserted in the player when not being played. This could damage the tape player unit and the cassette tape.
- o We strongly recommend against the use of tapes longer than C-60 (60 minutes total). Tapes such as C-120 or C-180 are very thin and do not perform as well in the automotive environment.

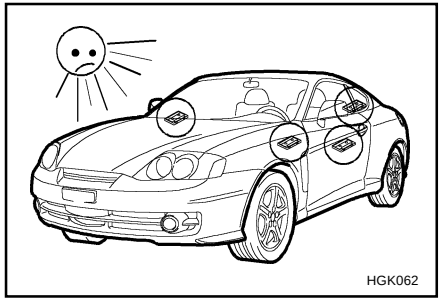

- Be sure that the cassette label is not loose or peeling off or tape ejection may be difficult.
- Never touch or soil the actual audio tape surfaces.
- Keep all magnetized objects, such as electric motors, speakers or transformers away from your cassette tapes and tape player unit.
- Store cassettes in a cool, dry place with the open side facing down to prevent dust from settling in the cassette body.
- Avoid repeated fast reverse usage to replay one given tune or tape section. This can cause poor tape winding to occur, and eventually cause excessive internal drag and poor audio quality in the cassette. If this occurs, it can sometimes be corrected by fast winding the tape from end to end several times. If this does not correct the problem, do not continue to use the tape in your vehicle.

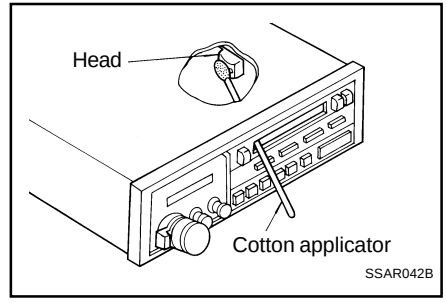

- The playback head, capstan and pinch rollers will develop a coating of tape residue that can result in deterioration of sound quality, such as a wavering sound. They should be cleaned monthly using a commercially available head cleaning tape or special solution available from audio specialty shops. Follow the supplier's directions carefully and never oil any part of the tape player unit.
- Always be sure that the tape is tightly wound on its reel before inserting in the player. Rotate a pencil in the drive sprockets to wind up any slack.

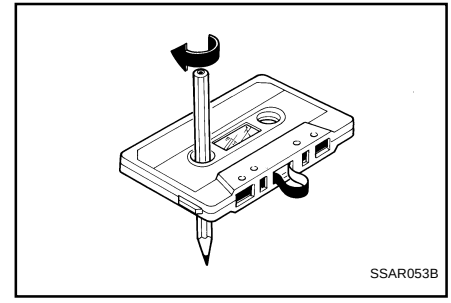

NOTE:

Look at a tape before you insert it. If the tape is loose, tighten it by turning one of the hubs with a pencil or your finger. If the label is peeling off, do not put it in the drive mechanism. .

Do not leave tapes sitting where they are exposed to hot, warm, or, high humidity, such as on top of the dashboard or in the player. If a tape is exposed to extreme heat or cold, let it reach a moderate temperature before putting it in the player.

B870A01A-AAT

ANTENNA

Fixed Rod Antenna

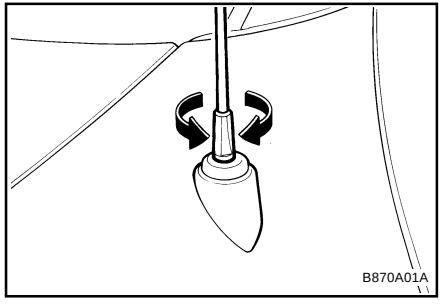

Your car uses a fixed rod antenna to receive both AM and FM broadcast signals.
This antenna is a removable type. To remove the antenna, turn it counterclockwise. To install the antenna, turn it clockwise.

CAUTION:

- **Be sure to remove the antenna before washing the car in an automatic car wash or it may be damaged.**
- **When reinstalling your antenna, it is important that it is fully tightened to ensure proper reception.**

2. DRIVING YOUR HYUNDAI

C010A01O-AAT

WARNING: ENGINE EXHAUST CAN BE DANGEROUS!

Engine exhaust fumes can be extremely dangerous. If, at any time, you smell exhaust fumes inside the vehicle, open the windows immediately.

o Do not inhale exhaust fumes.
Exhaust fumes contain carbon monoxide, a colorless, odorless gas that can cause unconsciousness and death by asphyxiation.

o Be sure the exhaust system does not leak.
The exhaust system should be checked whenever the vehicle is raised to change the oil or for any other purpose. If you hear a change in the sound of the exhaust or if you drive over something that strikes the underneath side of the car, have the exhaust system checked as soon as possible by your Hyundai dealer.

o Do not run the engine in an enclosed area.
Letting the engine idle in your garage, even with the garage door open, is a hazardous practice. Never run the engine in your garage any longer than it takes to start the engine and back the car out.

o Avoid idling the engine for prolonged periods with people inside the car.
If it is necessary to idle the engine for a prolonged period with people inside the car, be sure to do so only in an open area with the air intake set at "Fresh" and fan operating at one of the higher speeds so fresh air is drawn into the interior.

If you must drive with the tail gate open because you are carrying objects that make this necessary:

1. Close all windows.
2. Open side vents.
3. Set the air intake control at "Fresh", the air flow control at "Floor" or "Face" and the fan at one of the higher speeds.

To assure proper operation of the ventilation system, be sure the ventilation air intakes located just in front of the windshield are kept clear of snow, ice, leaves or other obstructions.

C020A01A-AAT

BEFORE STARTING THE ENGINE

Before you start the engine, you should always:

1. Look around the vehicle to be sure there are no flat tires, puddles of oil, water or other indications of possible trouble.
2. After entering the car, check to be sure the parking brake is engaged.
3. Check that all windows, and lights are clean.
4. Check that the interior and exterior mirrors are clean and in position.
5. Check your seat, seatback and headrest to be sure they are in their proper positions.
6. Lock all the doors.
7. Fasten your seat belt and be sure that all other occupants have fastened theirs.
8. Turn off all lights and accessories that are not needed.
9. When you turn the ignition switch to “ON”, check that all appropriate warning lights are operating and that you have sufficient fuel.
10. Check the operation of warning lights and all bulbs when key is in the “ON” position.

C030A01A-AAT

COMBINATION IGNITION SWITCH

To Start the Engine

- o If your Hyundai is equipped with a manual transaxle, place the shift lever in neutral and depress the clutch pedal fully.
- o If your Hyundai has an automatic transaxle, place the shift lever in "P" (park).
- o To start the engine, insert the ignition key and turn it to the "START" position. Release it as soon as the engine starts. Do not hold the key in the "START" position for more than 15 seconds.

NOTE:

- **o For safety, the engine will not start if the clutch pedal is not depressed fully (Manual transaxle) or the shift lever is not in “P” or “N” Position (Automatic transaxle).**
- **o The ignition key cannot be turned from "ACC" position to "LOCK" position unless the shift lever is in the "P" (Park) position or the negative battery terminal is disconnected from the battery. To remove the key, always confirm that the shift lever is securely positioned in "P" (Park) (For Automatic transaxle)**
- **o For additional information about starting, see page 2-3.**

C040A01A-AAT

KEY POSITIONS

WARNING:

The engine should not be turned off or the key removed from the ignition key cylinder while the vehicle is in motion. The steering wheel is locked by removing the key.

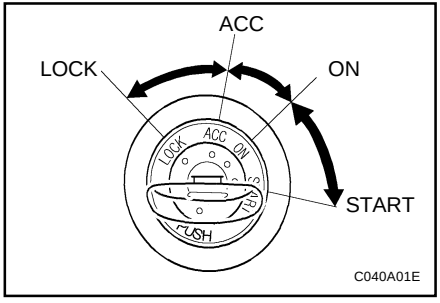

C040A01E

o “START”

The engine is started in this position. It will crank until you release the key.

NOTE:

Do not hold the key in the “START” position for more than 15 seconds.

o “ON”

When the key is in the “ON position, the ignition is on and all accessories may be turned on. If the engine is not running, the key should not be left in the “ON” position. This will discharge the battery and may also damage the ignition system.

o “ACC”

With the key in the “ACC” position, some electrical accessories (radio etc.) may be operated.

o "LOCK"

The key can be removed or inserted in this position. To protect against theft, the steering wheel locks by removing the key.

NOTE:

To unlock the steering wheel, insert the key, and then turn the steering wheel and key simultaneously.

C050A01A-AAT

STARTING

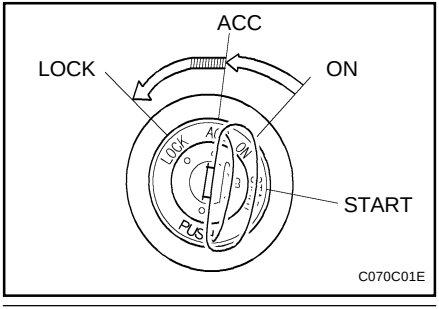

WARNING:

Never run the engine in a closed or poorly ventilated area any longer than is needed to move your car in or out of the area. The carbon monoxide gas emitted is odorless and can cause serious injury or death.

C050B01A-AAT

Normal Conditions:

The Starting Procedure:

1. Insert key, and fasten the seat belt.
2. Depress the clutch pedal fully and place the gearshift lever (manual transaxle) in neutral or the selector lever (automatic transaxle) in "P" (park) position.
3. After turning the ignition key to the "ON" position, make certain all warning lights and gauges are functioning properly before starting the engine.

WARNING:

Be sure that the clutch is fully depressed when starting a manual transaxle vehicle. Your manual transaxde equipped vehicle will not start unless the clutch pedal is fully depressed. On a manual transaxde equipped vehicle that can be started without depressing the clutch, there is the potential to cause damage to the vehicle or injury to someone inside or outside the vehicle as a result of the forward or backward movement of the vehicle that will occur if the clutch is not depressed when the vehicle is started.

4. Turn the ignition key to the "Start" position and release it when the engine starts.
   After the engine has started, allow the engine to run for 10 to 20 seconds prior to placing the vehicle in gear.
   The starter should not be operated for more than 15 seconds at a time. Wait 15-30 seconds between starting attempts to protect the starter from overheating.

C070C02A-AAT

To Remove the Ignition Key

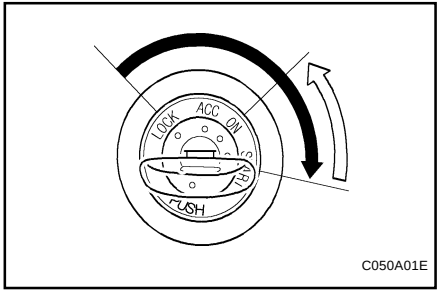

(If your vehicle is equipped with an automatic transaxle)

1. Turn the ignition key counterclockwise from the "ACC" position to the "LOCK" position.
2. The key can be removed in the "LOCK" position.

(If your vehicle is equipped with a manual transaxle)

1. Turn the ignition key to the "ACC" position.
2. Simultaneously push and turn the ignition key counterclockwise from the "ACC" position to the "LOCK" position.
3. The key can be removed in the "LOCK" position.

C070A02GK-AAT

OPERATING THE MANUAL TRANSAXLE

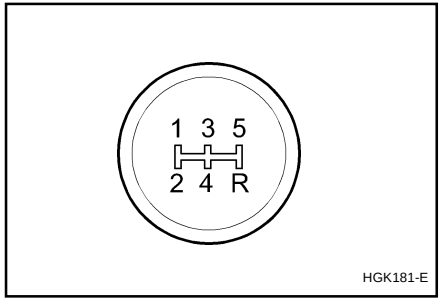

Your Hyundai's manual transaxle has a conventional shift pattern. This shift pattern is imprinted on the shift knob. The transaxle is fully synchronized in all forward gears so shifting to either a higher or a lower gear is easily accomplished.

NOTE:

- **To shift into reverse, rest the lever in neutral for at least 3 seconds after your car is completely stopped. Then move the lever into the reverse position.**
- **During cold weather, shifting may be difficult until the transaxle lubricant has warmed up. This is normal and not harmful to the transaxle.**
- **If you've come to a complete stop and it's hard to shift into 1st or R(Reverse), put the shift lever in N(Neutral) position and release the clutch. Press the clutch pedal back down, and then shift into 1st or R(Reverse) gear position.**
- **Do not use the shift lever as a handrest during driving, as this can result in premature wear of the transaxle shift forks.**

CAUTION:

When downshifting from fifth gear to fourth gear, caution should be taken not to inadvertently press the gear shift lever sideways in such a manner that second gear is engaged. Such a drastic downshift may cause the engine speed to increase to the point that the tachometer will enter the red zone. Such over-revving of the engine may possibly cause engine damage.

C070B01A-AAT

Using the Clutch

The clutch should be pressed all the way to the floor before shifting, then released slowly. The clutch pedal should always be used after fully returning to the original position. Do not rest your foot on the clutch pedal while driving. This can cause unnecessary wear.

Do not partially engage the clutch to hold the car on an incline. This causes unnecessary wear. Use the parking brake to hold the car on an incline. Do not operate the clutch pedal rapidly and repeatedly.

C070D02A-AAT

Good Driving Practices

- Never take the car out of gear and coast down a hill. This is extremely hazardous. Always leave the car in gear.
- Don't "ride" the brakes. This can cause them to overheat and malfunction. Instead, when you are driving down a long hill, slow down and shift to a lower gear. When you do this, engine braking will help slow the car.
- Slow down before shifting to a lower gear. This will help avoid over-revving the engine, which can cause damage.
- Slow down when you encounter cross winds. This gives you much better control of your car.

- Be sure the car is completely stopped before you attempt to shift into reverse. The transaxle can be damaged if you do not. To shift into reverse, depress the clutch, move the shift lever to neutral, wait three seconds, then shift to the reverse position.
- Exercise extreme caution when driving on a slippery surface. Be especially careful when braking, accelerating or shifting gears. On a slippery surface, an abrupt change in vehicle speed can cause the drive wheels to lose traction and the vehicle to go out of control.

WARNING:

- **The risk of rollover is greatly increased if you lose control of your vehicle at highway speeds.**
- **Loss of control often occurs if two or more wheels drop off the roadway and the driver oversteers to reenter the roadway.**
- **In the event your vehicle leaves the roadway, do not steer sharply. Instead, slow down before pulling back into the travel lanes.**
- **In a collision crash, an unbelted person is significantly more likely to die than a person wearing a seatbelt.**

C070E02GK-AAT

RECOMMENDED SHIFT POINTS

The shift points as shown below are recommended for optimum fuel economy and performance.

Shift from-to	Recommended
1-2	15 mph (20 km/h)
2-3	25 mph (40 km/h)
3-4	35 mph (55 km/h)
4-5	45 mph (75 km/h)

C090A03Y-AAT

AUTOMATIC TRANSAXLE

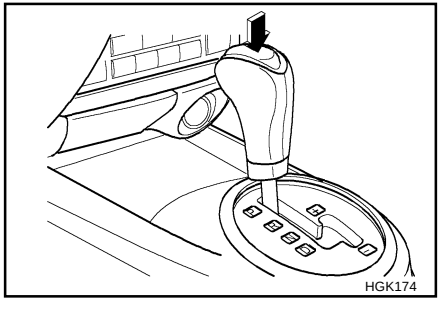

The highly efficient Hyundai automatic transaxle has four forward speeds and one reverse speed. The individual speeds are selected automatically, depending on the position of the speed selector lever. The selector lever has 2 gates; the main gate and the manual gate.

NOTE:

For information on manual gate operation, refer to "Sports Mode".

In the main gate, the selector lever has 4 positions, and is equipped with a button to avoid inadvertent wrong selection.

NOTE:

- **Depress the brake pedal and push the button when shifting.**
- **Push the button when shifting.**
- **The selector lever can be shifted freely.**

The first few shifts on a new vehicle, or if the battery has been disconnected, may be somewhat abrupt. This is a normal condition, and the shifting sequence will adjust after shifts are cycled a few times by the T.C.M (Transmission Control Module).

CAUTION:
Never shift into "R" or "P" position while the vehicle is moving.

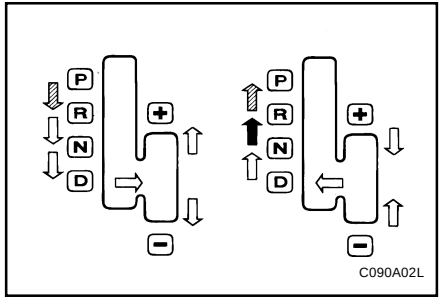

The indicator lights in the instrument cluster indicate the selector lever position when the ignition is switched "ON". During the sports mode operation, the gear currently in use displays in the numeral indicator.

C090B01A-AAT

The function of each position is as follows:

o P (Park):

Use to hold the vehicle in place when parked or while starting the engine; shift the selector lever to the "P" (Park) position. Whenever parking the car, apply the parking brake and shift the selector lever to the "P" (Park) position.

CAUTION:
Never place the selector lever in the "P" (Park) position unless the vehicle is fully stopped. Failure to observe this caution will cause severe damage to the transaxle.

C090C01A-AAT

o R(Reverse):

Use for backing up the vehicle. Bring the car to a complete stop before shifting the selector lever to "R" position.

C090D02O-AAT

o N (Neutral):

In the "N" position, the transaxle is in neutral, which means that no gears are engaged. The engine can be started with the shift lever in "N" position, although this is not recommended except if the engine stalls while the car is moving.

C090E01O-AAT

o D(Drive):

Use for normal driving. The transaxle will automatically shift through a four gear sequence.

C090F01GK-GAT

Sports Mode

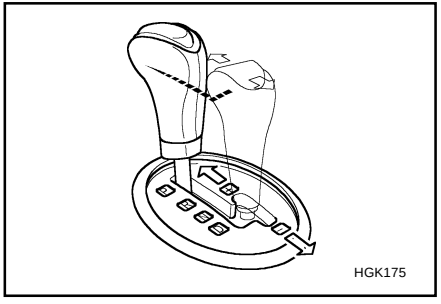

Whether the vehicle is stationary or in motion, sports mode is selected by pushing the selector lever from the "D" position into the manual gate. To return to "D" range operation, push the selector lever back into the main gate.

In sports mode, moving the selector lever backwards and forwards can make rapid gearshifts simple. In contrast to a manual transaxle, the sports mode allows gearshifts with the accelerator pedal depressed.

UP (+) : Push the lever forward once to shift up one gear.

DOWN (-) : Pull the lever backwards once to shift down one gear.

SKP : By rapidly moving the selector forward or backward twice, it is possible to skip one gear, i.e. 1st to 3rd or 3rd to 1st .

CAUTION:

- **In sports mode, the driver must execute upward shifts in accordance with prevailing road conditions, taking care to keep the engine speed below the red zone.**
- **For engine protection, upward shifts are made automatically when the engine rpm reaches the red zone.**
- **By rapidly moving the selector lever backwards (-) twice it is possible to skip one gear by using the sports mode. Since sudden engine braking and/or rapid acceleration can cause a loss of traction, however, downshifts must be made carefully in accordance with the vehicle's speed.**

NOTE:

- **In sports mode, only the four forward gears can be selected. To reverse or park the vehicle, move the selector lever to the "R" or "P" position as required.**
- **In sports mode, downward shifts are made automatically when the vehicle slows down. When the vehicle stops, 1st gear is automatically selected.**
- **To maintain the required levels of vehicle performance and safety, the system may not execute certain gearshifts when the selector lever is operated.**
- **Before driving away from a stop on a slippery road, push the selector lever forward into the +(UP) position. This causes the transaxle to shift into 2nd gear which is better for smooth driving away on a slippery road. Push the selector lever to the -(DOWN) side to shift back to 1st gear.**

C090H01L-GAT

NOTE:

- **For smooth and safe operation, depress the brake pedal when shifting from "Neutral" position or "Park" position to a forward or reverse gear.**
- **The ignition key must be in the "ON" position and the brake pedal fully depressed in order to move the shift lever from the "P" (Park) position to any of the other positions.**
- **It is always possible to shift from "R", "N", "D" position to "P" position. The vehicle must be fully stopped to avoid transaxle damage.**

C090I02L-GAT

CAUTION:

- **Shift into "R" and "P" position only when the vehicle has completely stopped.**
- **Do not accelerate the engine in reverse or any of the forward positions with the brakes applied.**
- **Always apply the footbrake when shifting from "P" or "N", to "R", "D"position.**
- **Do not use the "P" (Park) position in place of the parking brake. Always set the parking brake, shift the transaxle into "P" (Park) position and turn off the ignition when you leave the vehicle, even momentarily. Never leave the vehicle unattended while the engine is running.**
- **Check the automatic transaxle fluid level regularly, and add fluid as necessary.**
- **See the maintenance schedule for the proper fluid recommendation.**

C090N01O-AAT

Good Driving Practices

- Never move the gear selector lever from "P" or "N" to any other position with the accelerator pedal depressed.
- Never move the gear selector lever into "P" when the vehicle is in motion.
- Be sure the car is completely stopped before you attempt to shift into "R".
- Never take the car out of gear and coast down a hill. This may be extremely hazardous. Always leave the car in gear when moving.
- Do not "ride" the brakes. This can cause them to overheat and malfunction. Instead, when you are driving down a long hill, slow down and shift to a lower gear. When you do this, engine braking will help slow the car.
- Slow down before shifting to a lower gear. Otherwise, the lower gear may not be engaged.

- Always use the parking brake. Do not depend on placing the transaxle in "P" to keep the car from moving.
- Exercise extreme caution when driving on a slippery surface. Be especially careful when braking, accelerating or shifting gears. On a slippery surface, an abrupt change in vehicle speed can cause the drive wheels to lose traction and the vehicle to go out of control.

WARNING:

- **Avoid high cornering speeds.**
- **Do not make quick steering wheel movements, such as sharp lane changes or fast, sharp turns.**
- **Always wear your seat belts.**
- **The risk of rollover is greatly increased if you lose control of your vehicle at highway speeds.**
- **Loss of control often occurs if two or more wheels drop off the roadway and the driver oversteers to reenter the roadway.**
- **In the event your vehicle leaves the roadway, do not steer sharply. Instead, slow down before pulling back into the travel lanes.**
- **In a collision crash, un unbelted person is significantly more likely to die than a person wearing a seatbelt.**

C130A01A-AAT

GOOD BRAKING PRACTICES

WARNING:

Nothing should be carried on top of the shelf panel behind the rear seat. If there were an accident or a sudden stop, such objects could move forward and cause damage to the vehicle or injure the occupants.

- After being parked, check to be sure the parking brake is not engaged and that the parking brake indicator light is out before driving away.
- Driving through water may get the brakes wet. They can also get wet when the car is washed. Wet brakes can be dangerous! Your car will not stop as quickly if the brakes are wet. Wet brakes cause the car to pull to one side. To dry the brakes, apply the brakes lightly until the braking action returns to normal, taking care to keep the car under control at all times. If the braking action does not return to normal, stop as soon as it is safe to do so and call your Hyundai dealer for assistance.
- Don't coast down hills with the car out of gear. This is extremely hazardous. Keep the car in gear at all times, use the brakes to slow down, then shift to a lower gear so that engine braking will help you maintain a safe speed.
- Don't "ride" the brake pedal. Resting your foot on the brake pedal while driving can be dangerous because it can result in the brakes overheating and losing their effectiveness. It also increases the wear of the brake components.
- If a tire goes flat while you are driving, apply the brakes gently and keep the car pointed straight ahead while you slow down. When you are moving slowly enough for it to be safe to do so, pull off the road and stop in a safe place.
- If your car is equipped with an automatic transaxle, don't let your car creep forward. To avoid creeping forward, keep your foot on the brake pedal when the car is stopped.
- Use caution when parking on a hill. Engage the parking brake and place the gear selector lever in "P" (automatic transaxle) or in first or reverse gear (manual transaxle). If your car is facing downhill, turn the front wheels into the curb to help keep the car from rolling. If your car is facing uphill, turn the front wheels away from the curb to help keep the car from rolling. If there is no curb or if it is required by other conditions to keep the car from rolling, block the wheels.
- Under some conditions your parking brake can freeze in the engaged position. This is most likely to happen when there is an accumulation of snow or ice around or near the rear brakes or if the brakes are wet. If there is a risk that the parking brake may freeze, apply it only temporarily while you

put the gear selector lever in “P” (automatic) or in first or reverse gear (manual transaxle) and block the rear wheels so the car cannot roll. Then release the parking brake.

- Do not hold the vehicle on the upgrade with the accelerator pedal. This can cause the transmission to overheat. Always use the brake pedal or parking brake.

C120A02A-AAT

ANTI-LOCK BRAKE SYSTEM (If installed)

The Anti-Lock Brake System (ABS) is designed to prevent wheel lock-up during sudden braking or on hazardous road surfaces. The ABS control module monitors the wheel speed and controls the pressure applied to each brake. Thus, in emergency situations or on slick roads, ABS will increase vehicle control during braking.

NOTE:

During ABS operation, a slight pulsation may be felt in the brake pedal when the brakes are applied. Also, a noise may be heard in the engine compartment while braking. These conditions are normal and indicate that the anti-lock brake system is functioning properly.

WARNING:

ABS will not prevent accidents due to improper or dangerous driving maneuvers. Even though vehicle control is improved during emergency braking, always maintain a safe distance between you and objects ahead. Vehicle speeds should always be reduced during extreme road conditions.
The braking distance for cars equipped with an anti-lock braking system may be longer than for those without it in the following road conditions.

- **Driving on rough, gravel or snow-covered roads.**
- **Driving with tire chains installed.**
- **Driving on roads where the road surface is pitted or has different surface height.**

During these conditions the vehicle should be driven at reduced speeds. The safety features of an ABS equipped vehicle should not be tested by high speed driving or cornering. This could endanger the safety of yourself or others.

C300A03Y-GAT

TRACTION CONTROL SYSTEM (TCS) (If installed)

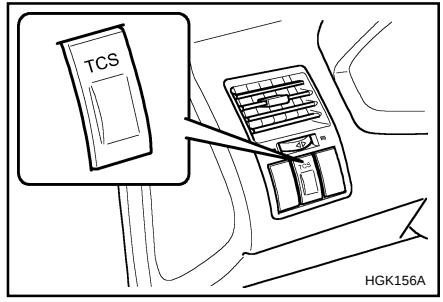

On slippery road surfaces, the traction control system (TCS) limits the drive wheels from spinning excessively, thus helping the car to accelerate. It also provides sufficient driving force and steering performance as the car turns at accelerated speeds.

SLIP Control

Limits the drive wheels from spinning excessively during starting or while making accelerated turns on slippery roads to avoid losing the driving force of the front wheels.

Driving hints

TCS does not actively apply brakes. Be sure to decelerate the car sufficiently before entering curves.

CAUTION:

When the TCS indicator blinks, SLIP control has been activated. It also means that the road is slippery or your car is accelerating excessively. In this situation, release foot pressure from the accelerator pedal and maintain moderate speed.

WARNING:

Traction control is only a driving aid; all normal precautions for driving in inclement weather and on slippery road surfaces should be observed.

C300B01GK-GAT

TCS ON/OFF Mode

In the TCS ON mode, the indicator in the instrument cluster will not be illuminated.
To switch the TCS OFF mode, press the TCS switch . To switch the TCS mode, press the TCS switch again. In the TCS OFF mode, the SLIP control will be deactivated and the TCS-OFF indicator in the instrument cluster will be illuminated.

NOTE:

1) **Turn off the engine. Then restart the engine, and the TCS mode will automatically turn ON.**
2) **When the traction control is operating properly, you can feel a slight pulsation in the vehicle. This is only the effect of brake control and indicates nothing unusual.**
3) **When the engine starts, a click is heard from the engine compartment; however, this is only the sound of traction control being checked.**
4) **When moving out of the mud or fresh snow, pressing the accelerator pedal may not cause the engine speed to increase.**

C300D01GK-GAT

Indicator and Warning

The indicator should illuminate when the ignition key is turned to ON or START but should go out after three seconds.
If the indicator does not illuminate, or the TCS indicator does not go out after 3 seconds, have it checked by an authorized dealer.

Should there be any unusual conditions in the device, TCS-OFF either illuminates or blinks as a warning.
If TCS-OFF illuminates or blinks, pull your car to a safe place and stop the engine.
Then, start the engine again to check if the TCS-OFF indicator goes out.

If the indicator remains lit even after the engine has been started, have your car checked by an authorized Hyundai dealer.

NOTE:

1) **When TCS-OFF illuminates or blinks, traction control is automatically deactivated for safety.**
2) **This warning function is not provided when the driver selects the TCS-OFF mode.**

C140A01A-AAT

DRIVING FOR ECONOMY

You can save fuel and get more miles from your car if you follow these suggestions:

- Drive smoothly. Accelerate at a moderate rate. Don't make "jack-rabbit" starts or full-throttle shifts and maintain a steady cruising speed. Don't race between stoplights. Try to adjust your speed to that of the other traffic so you don't have to change speeds unnecessarily. Avoid heavy traffic whenever possible. Always maintain a safe distance from other vehicles so you can avoid unnecessary braking. This also reduces brake wear.
- Drive at a moderate speed. The faster you drive, the more fuel your car uses. Driving at a moderate speed, especially on the highway, is one of the most effective ways to reduce fuel consumption.
- Don't "ride" the brake or clutch pedal. This can increase fuel consumption and also increase wear on these components. In addition, driving with your foot resting on the brake pedal may cause the brakes to overheat, which reduces their effectiveness and may lead to more serious consequences.

- Take care of your tires. Keep them inflated to the recommended pressure. Incorrect inflation, either too much or too little, results in unnecessary tire wear. Check the tire pressures at least once a month.
- Be sure that the wheels are aligned correctly. Improper alignment can result from hitting curbs or driving too fast over irregular surfaces. Poor alignment causes faster tire wear and may also result in other problems as well as greater fuel consumption.
- Keep your car in good condition. For better fuel economy and reduced maintenance costs, maintain your car in accordance with the maintenance schedule in Section 5. If you drive your car in severe conditions, more frequent maintenance is required (see Section 5 for details).
- Keep your car clean. For maximum service, your Hyundai should be kept clean and free of corrosive materials. It is especially important that mud, dirt, ice, etc. not be allowed to accumulate on the underside of the car. This extra weight can result in increased fuel consumption and also contribute to corrosion.
- Travel lightly. Don't carry unnecessary weight in your car. Weight reduces fuel economy.
- Don't let the engine idle longer than necessary. If you are waiting (and not in traffic), turn off your engine and restart only when you're ready to go.
- Remember, your Hyundai does not require extended warm-up. As soon as the engine is running smoothly, you can drive away. In very cold weather, however, give your engine a slightly longer warm-up period.
- Don't "lug" or "over-rev" the engine. Lugging is driving too slowly in too high a gear resulting in the engine bucking. If this happens, shift to a lower gear. Over-revving is racing the engine beyond its safe limit. This can be avoided by shifting at the recommended speeds.
- Use your air conditioning sparingly. The air conditioning system is operated by engine power so your fuel economy is reduced when you use it.

C150A01A-AAT

SMOOTH CORNERING

Avoid braking or gear changing in corners, especially when roads are wet. Ideally, corners should always be taken under gentle acceleration. If you follow these suggestions, tire wear will be held to a minimum.

C160A01A-AAT

WINTER DRIVING

The more severe weather conditions of winter result in greater wear and other problems. To minimize the problems of winter driving, you should follow these suggestions:

C160B01A-AAT

Snowy or Icy Conditions

To drive your vehicle in deep snow, it may be necessary to use snow tires or to install tire chains on your tires. If snow tires are needed, it is necessary to select tires equivalent in size and type to the original equipment tires. Failure to do so may adversely affect the safety and handling of your car. Speeding, rapid acceleration, sudden brake applications, and sharp turns are potentially very hazardous practices.

During deceleration, use engine braking to the fullest extent. Sudden brake applications on snowy or icy roads may cause skids to occur. You need to keep sufficient distance between the vehicle in front and your vehicle. Also, apply the brake gently. It should be noted that installing tire chains on the tire will provide a greater driving force, but will not prevent side skids.

NOTE:

Tire chains are not legal in all states. Check state laws before fitting tire chains.

C160C01A-AAT

Use High Quality Ethylene Glycol Coolant

Your Hyundai is delivered with high quality ethylene glycol coolant in the cooling system. It is the only type of coolant that should be used because it helps prevent corrosion in the cooling system, lubricates the water pump and prevents freezing. Be sure to replace or replenish your coolant in accordance with the main-

tenance schedule in Section 5. Before winter, have your coolant tested to assure that its freezing point is sufficient for the temperatures anticipated during the winter.

C160D01F-AAT

Check Battery and Cables

Winter puts additional burdens on the battery system. Visually inspect the battery and cables as described in Section 6 (See page 6-16). The level of charge in your battery can be checked by your Hyundai dealer or a service station.

C160E01A-AAT

Change to "Winter Weight" Oil if Necessary

In some climates it is recommended that a lower viscosity "winter weight" oil be used during cold weather. See Section 9 for recommendations. If you aren't sure what weight oil you should use, consult your Hyundai dealer.

C160F01F-AAT

Check Spark Plugs and Ignition System

Inspect your spark plugs as described in Section 6 (See page 6-6) and replace them if necessary. Also check all ignition wiring and components to be sure they are not cracked, worn or damaged in any way.

C160G01A-AAT

To Keep Locks from Freezing

To keep the locks from freezing, squirt an approved de-icer fluid or glycerine into the key opening. If a lock is covered with ice, squirt it with an approved de-icing fluid to remove the ice. If the lock is frozen internally, you may be able to thaw it out by using a heated key. Handle the heated key with care to avoid burning the fingers.

C160H01A-AAT

Use Approved Anti-Freeze in Window Washer System

To keep the water in the window washer system from freezing, add an approved anti-freeze solution in accordance with instructions on the container. Window washer anti-freeze is available from Hyundai dealers and most auto parts outlets. Do not use engine coolant or other types of anti-freeze as these may damage the finish.

C160I01A-AAT

Don't Let Your Parking Brake Freeze

Under some conditions your parking brake can freeze in the engaged position. This is most likely to happen when there is an accumulation of snow or ice around or near the rear brakes or if the brakes are wet. If there is a risk the parking brake may freeze, apply it only temporarily while you put the gear selector lever in "P" (automatic) or in first or reverse gear (manual transaxle) and block the rear wheels so the car cannot roll. Then release the parking brake.

C160J01A-AAT

Don't Let Ice and Snow Accumulate Underneath

Under some conditions, snow and ice can build up under the fenders and interfere with the steering. When driving in severe winter conditions where this may happen, you should periodically check underneath the car to be sure the movement of the front wheels and the steering components is not obstructed.

C160K01A-AAT

Carry Emergency Equipment

Depending on the severity of the weather where you drive your car, you should carry appropriate emergency equipment. Some of the items you may want to carry include tire chains, tow straps or chains, flashlight, emergency flares, sand, a shovel, jumper cables, a window scraper, gloves, ground cloth, coveralls, a blanket, etc.

C170A01A-AAT

HIGHER SPEED MOTORING

Pre-Trip Inspections

1. Tires:
Adjust the tire inflation pressures to specification. Low tire inflation pressures will result in overheating and possible failure of the tires.
Avoid using worn or damaged tires which may result in reduced traction or tire failure.

NOTE:
Never exceed the maximum tire inflation pressure shown on the tires.

2. Fuel, engine coolant and engine oil: High speed travel consumes 1.5 times more fuel than urban motoring. Do not forget to check both engine coolant and engine oil.

3. Drive belt:
A loose or damaged drive belt may result in overheating of the engine.

C180A01A-AAT

USE OF LIGHTS

Check your lights regularly for correct operation and always keep them clean. When driving during the day in conditions of poor visibility, it is helpful to drive with headlights on low beam. This enables you to be seen as well as to see.

C190A02S-AAT

TRAILER OR VEHICLE TOWING

If you are considering towing with your car, you should first check with your State's Department of Motor Vehicles to determine their legal requirements.
Since laws vary from State to State, the requirements for towing trailers, cars, other types of vehicles, or apparatus may differ. Ask your Hyundai dealer for further details before towing.

CAUTION:
Do not do any towing with your car during its first 1,200 miles (2,000 km) in order to allow the engine to properly break in. Failure to heed this caution may result in serious engine or transaxle damage.

C190B01S-AAT

Trailer Hitches

Select the proper hitch and ball combination, making sure that its location is compatible with that of the trailer or vehicle being towed. Use a quality non-equalizing hitch which distributes the tongue load uniformly throughout the chassis.

The hitch should be bolted securely to the car and installed by a qualified technician. DO NOT USE A HITCH DESIGNED FOR TEMPORARY INSTALLATION AND NEVER USE ONE THAT ATTACHES ONLY TO THE BUMPER.

C190C02S-AAT

Trailer Brakes

If your trailer is equipped with a braking system, make sure it conforms to federal and/or local regulations and that it is properly installed and operating correctly.

NOTE:
If you tow a trailer or vehicle, your car will require more frequent maintenance due to the additional load. See "Maintenance Under Severe Usage Conditions" on page 5-5.

CAUTION:
- **Never connect a trailer brake system directly to the vehicle brake system.**
- **When towing a trailer on steep grades (in excess of 12%) pay close attention to the engine coolant temperature gauge to ensure the engine does not overheat. If the needle of the coolant temperature gauge moves across the dial towards "H" (HOT), pull over and stop as soon as it is safe to do so, and allow the engine to idle until it cools down. You may proceed once the engine has cooled sufficiently.**

C190D01S-AAT

Safety Chains

Should the hitch connection between your car and the trailer or vehicle you are towing fail, the trailer or vehicle could wander dangerously across other lanes of traffic and ultimately leave the roadway. To eliminate this potentially dangerous situation, safety chains, attached between your car and the trailer or towed vehicle, are required in most states.

C190E01GK-AAT

Trailer Weight Limit

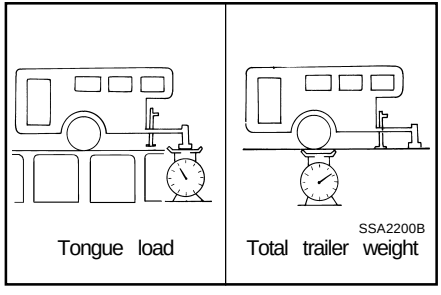

Tongue load | Total trailer weight

Tongue loads can be increased or decreased by redistributing the load in the trailer.
This can be verified by checking the total weight of the loaded trailer and then checking the load on the tongue.

NOTE:

1. **Never load the trailer with more weight in the back than in the front. About 60% of the trailer load should be in the front half on the trailer and the remaining 40% in the rear.**
2. **The total gross vehicle weight with trailer must not exceed the Gross Vehicle Weight Rating (GVWR) shown on the vehicle identification plate (see page 8-1). The total gross vehicle weight is the combined weight of the vehicle, driver, all passengers and their luggage, cargo, hitch, trailer tongue load and other optional equipment.**
3. **The front or rear axle weight must not exceed the Gross Axle Weight Rating (GAWR) shown on the vehicle identification plate (see page 8-1). It is possible that your towing package does not exceed the GVWR but exceeds the GAWR. Improper trailer loading and/or too much luggage in the trunk can overload the rear axle. Redistribute the load and check the axle weight again.**

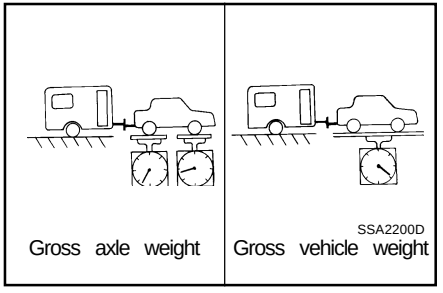

Gross axle weight | Gross vehicle weight

CAUTION:

The following specifications are recommended when towing a trailer. The loaded trailer weight cannot safely exceed the values in the chart below.

Lbs. (kg)

Maximum Towable Weight	
Trailer	Tongue
1000 (453)	100 (45)

WARNING:

Improperly loading your car and trailer can seriously affect its steering and braking performance causing a crash which could cause serious injury or death.

C190F01S-AAT

Trailer or Vehicle Towing Tips

1. Before towing, check hitch and safety chain connections as well as proper operation of the trailer running lights, brake lights, and turn signals.
2. Always drive your vehicle at a moderate speed. (Less than 60 mph)
3. Trailer towing requires more fuel than normal conditions.
4. To maintain engine braking efficiency and electrical charging performance, do not use fifth gear (manual transaxle) or overdrive (automatic transaxle).
5. Always secure items in the trailer to prevent load shift while driving.
6. Check the condition and air pressure of all tires on the trailer and your car. Low tire pressure can seriously affect the handling. Also check the spare tire.
7. The vehicle/trailer combination is more affected by crosswind and buffeting.
   When being passed by a large vehicle, keep a constant speed and steer straight ahead. If there is too much wind buffeting slow down to get out of the other vehicle's air turbulence.
8. When parking your car and trailer, especially on a hill, be sure to follow all the normal precautions. Turn your front wheel into the curb, set the parking brake firmly, and put the transaxle in 1st or Reverse (manual) or Park (automatic). In addition, place wheel chocks at each of the trailer's tires.
9. If the trailer has electric brakes, start your vehicle and trailer moving, and then apply the trailer brake controller by hand to be sure the brakes are working. This lets you check your electrical connection at the same time.
10. During your trip, occasionally check to be sure that the load is secure, and that the lights and any trailer brakes are still working.
11. Avoid jerky starts, sudden acceleration or sudden stops.
12. Avoid sharp turns and rapid lane changes.
13. Avoid holding the brake pedal down too long or too frequently. This could cause the brakes to overheat, resulting in reduced braking efficiency.
14. When going down a hill, shift into a lower gear and use the engine braking effect.
    When ascending a long grade, downshift the transaxle to a lower gear and reduce speed to reduce chances of engine overloading and/or overheating.
15. If you have to stop while going uphill, do not hold the vehicle in place by pressing on the accelerator. This can cause the automatic transaxle to overheat. Use the parking brake or footbrake.

NOTE:

When towing check transaxle fluid more frequently.

CAUTION:

If overheating should occur when towing, (the temperature gauge reads near red zone), taking the following action may reduce or eliminate the problem.

1. Turn off the air conditioner.
2. Reduce highway speed.
3. Select a lower gear when going uphill.
4. While in stop and go traffic, place the gear selector in park or neutral and idle the engine at a higher speed.

3. WHAT TO DO IN AN EMERGENCY

D010A01A-AAT

IF THE ENGINE WILL NOT START

CAUTION:

If the engine will not start, do not push or pull the car to start it. This could result in a collision or cause other damage. In addition, push or pull starting may cause the catalytic converter to be overloaded and create a fire hazard.

D010B02A-AAT

If Engine Doesn't Turn Over or Turns Over Slowly

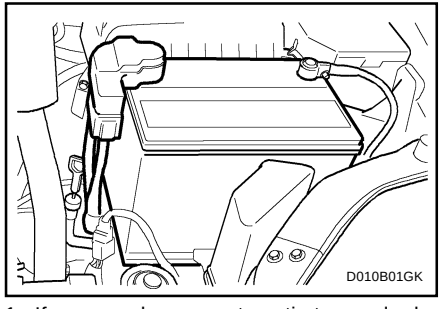

1. If your car has an automatic transaxle, be sure the gear selector lever is in "N" or "P" and the emergency brake is set.
2. Check the battery connections to be sure they are clean and tight.
3. Turn on the interior light. If the light dims or goes out when you operate the starter, the battery is discharged.
4. Check the starter connections to be sure they are securely tightened.
5. Do not push or pull the vehicle to start it. See instructions for "Jump Starting".

D010C01A-AAT

If Engine Turns Over Normally but Does Not Start

1. Check fuel level.
2. Check all connectors at ignition, coil and spark plugs. Reconnect any that may be disconnected or loose.
3. Check the fuel line in the engine room.
4. If the engine still refuses to start, call a Hyundai dealer or seek other qualified assistance.

D010D01A-AAT

If the Engine Stalls While Driving

1. Reduce your speed gradually, keeping a straight line. Move cautiously off the road to a safe place.
2. Turn on your emergency flashers.
3. Try to start the engine again. If your vehicle will not start, contact a Hyundai dealer or seek other qualified assistance.

D020A02A-AAT

JUMP STARTING

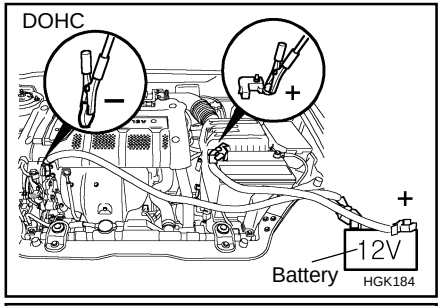

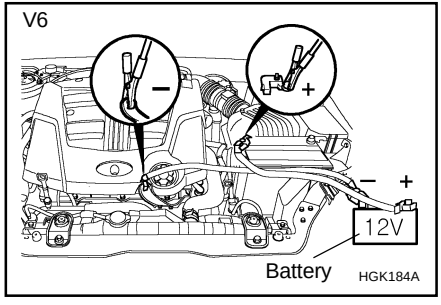

WARNING:

The gas produced by the battery during the jump-start operation is highly explosive. If these instructions are not followed exactly, serious personal injury and damage to the vehicle may occur! If you are not sure how

to follow this procedure, seek qualified assistance. Automobile batteries contain sulfuric acid. This is poisonous and highly corrosive. When jump starting, wear protective glasses and be careful not to get acid on yourself, your clothing or on the car.

- o If you should accidentally get acid on your skin or in your eyes, immediately remove any contaminated clothing and flush the area with clear water for at least 15 minutes. Then promptly obtain medical attention. If you must be transported to an emergency facility, continue to apply water to the affected area with a sponge or cloth.
- o The gas produced by the battery during the jump-start operation is highly explosive. Do not smoke or allow a spark or an open flame in the vicinity.
- o The battery being used to provide the jump start must be 12-volt. If you cannot determine that it is a 12-volt battery, do not attempt to use it for the jump start.
- o To jump start a car with a discharged battery, follow this procedure exactly:

1. If the booster battery is installed in another vehicle, be sure the two vehicles are not touching.
2. Turn off all unnecessary lights and accessories in both vehicles.
3. Attach the clamps of the jumper cable in the exact location shown on the previous page. First, attach one clamp of the jumper cable to the positive (+) post or cable of the discharged battery. Then attach the other end of the same cable to the positive (+) post or cable of the booster battery. Next, using the other cable, attach one clamp to the negative (-) post or cable of the booster battery. Then attach the other end of that cable to a solid metal part of the engine away from the battery. Do not connect the cable to any moving part.
4. Start the engine in the car with the booster battery and let it run for a few minutes. This will help to assure that the booster battery is fully charged. During the jumping operation, run the engine in this vehicle at about 2,000 rpm.
5. Start your engine using the normal starting procedure. After the engine starts, leave the jumper cables connected and let the engine run at fast idle or about 2,000 rpm for several minutes.
6. Carefully remove the jumper cables in the reverse order of attachment.

If you do not know why your battery became discharged (because the lights were left on, etc.), have the charging system checked by your Hyundai dealer.

D030A01A-AAT

IF THE ENGINE OVERHEATS

If your temperature gauge indicates overheating, you experience a loss of power, or hear loud pinging or knocking and the engine is probably too hot. If this happens and, you should:

1. Pull off the road and stop as soon as it is safe to do so.
2. Place the gear selector lever in "P" (automatic), or neutral (manual transaxle) and set the parking brake. If the air conditioning is on, turn it off.
3. If engine coolant is running out under the car or steam is coming out from the hood, stop the engine. Do not open the hood until the engine coolant has stopped running or the steaming has stopped. If there is no visible loss of engine coolant and no steam, leave the engine running and check to be sure the engine cooling fan is operating. If the fan is not running, turn the engine off.
4. Check to see if the water pump drive belt is missing. If it is not missing, check to see that it is tight. If the drive belt seems to be satisfactory, check for engine coolant leaking from the radiator, hoses or under the car. (If the air conditioning had been in use, it is normal for cold water to be draining from it when you stop).

WARNING:
While the engine is running, keep hair, hands, and clothing away from moving parts such as the fan and drive belts to prevent injury.

5. If the water pump drive belt is broken or engine coolant is leaking out, stop the engine immediately and call the nearest Hyundai dealer for assistance.

WARNING:
Do not remove the radiator cap when the engine is hot. This can allow coolant to be blown out of the opening and cause serious burns.

6. If you cannot find the cause of the overheating, wait until the engine temperature has returned to normal. Then, if the engine coolant has been lost, carefully remove the radiator cap and add engine coolant to bring the fluid level in the reservoir up to the halfway mark.
7. Proceed with caution, keeping alert for further signs of overheating. If overheating happens again, call a Hyundai dealer for assistance.

CAUTION:
Serious loss of engine coolant indicates there is a leak in the cooling system and this should be checked as soon as possible by a Hyundai dealer.

D040A01GK-AAT

TEMPORARY SPARE TIRE

The following instructions for the temporary spare tire should be observed:

1. Check inflation pressure as soon as practical after installing the spare tire, and adjust to the specified pressure. The tire pressure should be periodically checked and maintained at the specified pressure while the tire is stored.
2. The spare tire should only be used temporarily and should be returned to the luggage compartment as soon as the original tire can be repaired or replaced.
3. Continuous use at speeds of over 80 km/h (50 mph) is not recommended.
4. As the temporary spare tire is specifically designed for your car, it should not be used on any other vehicle.
5. The temporary spare tire should not be used on any other wheels, nor should standard tires, snow tires, wheel covers or trim rings be used with the temporary spare wheel. If such use is attempted, damage to these items or other car components may occur.
6. The temporary spare tire pressure should be checked once a month while the tire is stored.

Spare Tire Pressure

Tire Size	T125/70R 16
Inflation Pressure	60 psi (420 kPa)

CAUTION:
- **Do not use snow chains with your temporary spare tire.**
- **Do not use more than one temporary spare tire at a time.**

D040B01A-AAT

Handling the Spare Tire

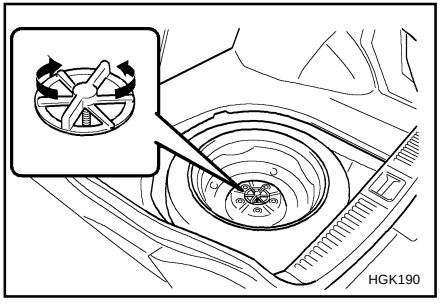

Remove the installation bolt to remove the spare tire. To replace the spare tire in its storage compartment, tighten the bolt firmly with your fingers until there is no more play in the spare tire.

D050A01A-AAT

IF YOU HAVE A FLAT TIRE

If a tire goes flat while you are driving:

1. Take your foot off the accelerator pedal and let the car slow down while driving straight ahead. Do not apply the brakes immediately or attempt to pull off the road as this may cause a loss of control. When the car has slowed to such a speed that it is safe to do so, brake carefully and pull off the road.
   Drive off the road as far as possible and park on firm, level ground. If you are on a divided highway, do not park in the median area between the two traffic lanes.
2. When the car is stopped, turn on your emergency hazard flashers, set the parking brake and put the transaxle in "P" (automatic) or reverse (manual transaxle).
3. Have all passengers get out of the car. Be sure they all get out on the side of the car that is away from traffic.
4. Change the tire following the instructions provided on the following pages.

D060A01A-AAT

CHANGING A FLAT TIRE

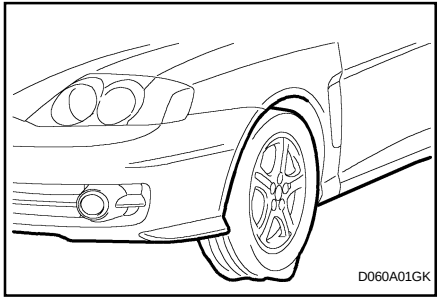

The procedure described on the following pages can be used to rotate tires as well as to change a flat tire. When preparing to change a flat tire, check to be sure the gear selector lever is in "P" (automatic transaxle) or reverse gear (manual transaxle) and that the parking brake is set, then:

D060K02Y-AAT

Wheel Cap (If Installed)

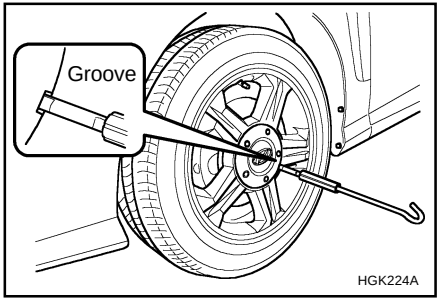

1. Wrap a piece of cloth around the tip of the wrench bar to avoid scratching.
2. Insert the wrench bar into the groove of the wheel cap and pry gently to remove the wheel cap.

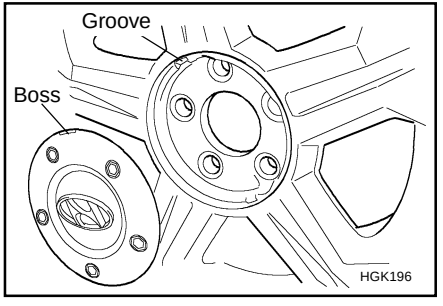

3. Change the flat tire.
4. Reinstall the wheel cap by fitting the boss of the wheel cap in the groove of the wheel, hitting the center of the wheel cap with your hand.

D060B02GK-AAT

1. Obtain Spare Tire and Tool

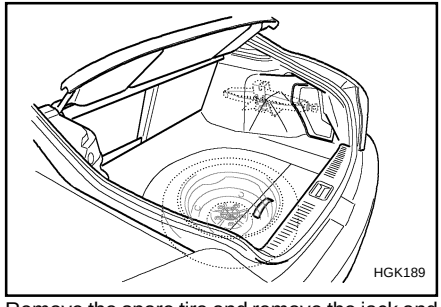

Remove the spare tire and remove the jack and tool bag from the trunk.

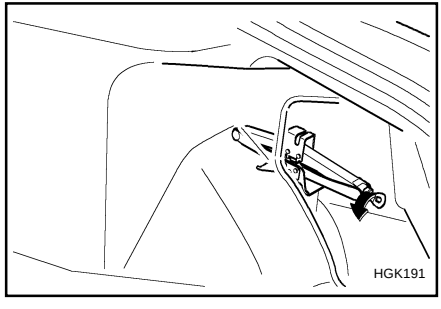

The jack is located behind the right side of luggage trim. Remove the jack cover by unscrewing the bolts. Turn the jack end counterclockwise to lower the jack height by using a screw driver or wrench bar and remove it from the bracket.

D060C01A-AAT

2. Block the Wheel

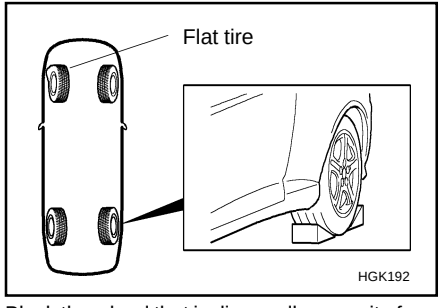

Block the wheel that is diagonally opposite from the flat to keep the vehicle from rolling when the car is raised on the jack.

D060D02A-AAT

3. Loosen Wheel Nuts

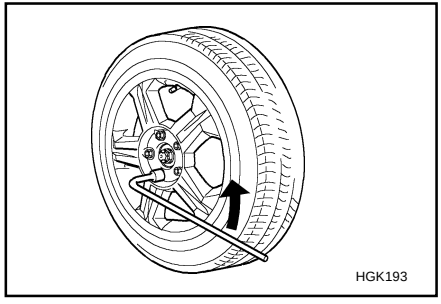

The wheel nuts should be loosened slightly before raising the car. To loosen the nuts, turn the wrench handle counterclockwise. When doing this, be sure that the socket is seated completely over the nut so it cannot slip off. For maximum leverage, position the wrench so the handle is to the left as shown in the drawing. Then, while holding the wrench near the end of the handle, push down on it with steady pressure. Do not remove the nuts at this time. Just loosen them about one-half turn.

D060E01A-AAT

4. Put the Jack in Place

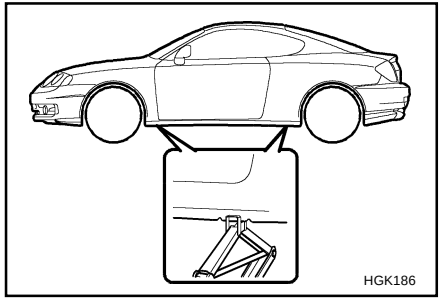

The base of the jack should be placed on firm, level ground. The jack should be positioned as shown in the drawing.

D060F02E-AAT

5. Raising the Car

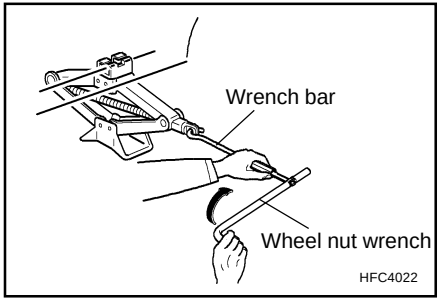

After inserting a bar into the wheel nut wrench, install the bar into the jack as shown in the drawing. To raise the vehicle, turn the jack handle clockwise. As the jack begins to raise the vehicle, double check that it is properly positioned and will not slip. If the jack is on soft ground or sand, place a board, brick, flat stone or other object under the base of the jack to keep it from sinking.

Raise the car high enough so that the fully inflated spare tire can be installed. To do this, you will need more ground clearance than is required to remove the flat tire.

WARNING:

Do not get under the car when it is supported by the jack! This is very dangerous as the jack could fall and cause serious injury or death. No one should stay in the car while the jack is being used.

D060G02Y-AAT

6. Changing Wheels

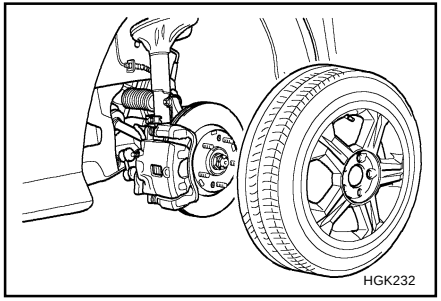

Loosen the wheel nuts and remove them with your fingers. Slide the wheel off the studs and lay it flat so it cannot roll away. To put the wheel on the hub, pick up the spare tire, line up the holes with the studs and slide the wheel onto them. If this is difficult, tip the wheel slightly and get the top hole in the wheel lined up with the top stud. Then jiggle the wheel back and forth until the wheel can be slid over the other studs.

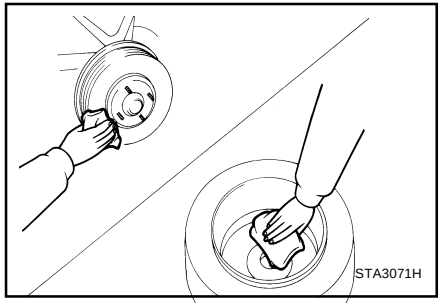

WARNING:
Wheels and wheel covers may have sharp edges. Handle them carefully to avoid possible severe injury. Before putting the wheel into place, be sure that there is nothing on the hub or wheel (such as mud, tar, gravel, etc.) that interferes with the wheel from fitting solidly against the hub. If there is, remove it. If there is not good contact on the mounting surface between the wheel and hub, the wheel nuts could come loose and cause the loss of a wheel. Loss of a wheel may result in loss of control of the vehicle. This may cause serious injury or death.

D060H02Y-AAT

7. Reinstall Wheel Nuts

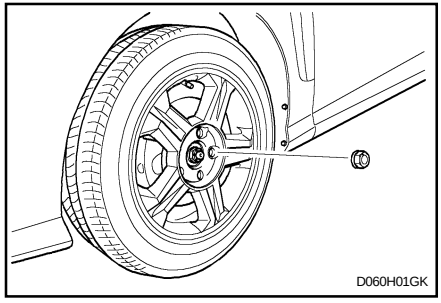

To reinstall the wheel, hold it on the studs, put the wheel nuts on the studs and tighten them finger tight. The nuts should be installed with their small diameter ends directed inward. Jiggle the tire to be sure it is completely seated, then tighten the nuts as much as possible with your fingers again.

D060I01E-AAT

8. Lower Vehicle and Tighten Nuts

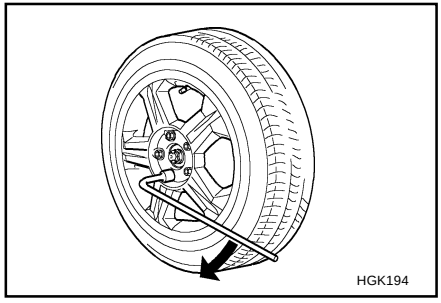

Lower the car to the ground by turning the wheel nut wrench counterclockwise. Then position the wrench as shown in the drawing and tighten the wheel nuts. Be sure the socket is seated completely over the nut. Do not stand on the wrench handle or use an extension pipe over the wrench handle.
Go around the wheel tightening every other nut until they are all tight. Then double-check each nut for tightness. After changing wheels, have a technician tighten the wheel nuts to their proper torque as soon as possible.

Wheel nut tightening torque:
Steel wheel & aluminium alloy wheel:
65-80 lb.ft (900-1,100 kg.cm)

D060J01FC-GAT

After Changing Wheels

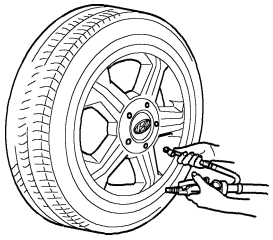

HGK195

If you have a tire gauge, remove the valve cap and check the air pressure. If the pressure is lower than recommended, drive slowly to the nearest service station and inflate to the correct pressure. If it is too high, adjust it until it is correct. Always reinstall the valve cap after checking or adjusting tire pressure. If the cap is not replaced, air may leak from the tire. If you lose a valve cap, buy another and install it as soon as possible.

After you have changed wheels, always secure the flat tire in its place in the luggage compartment and return the jack and tools to their proper storage locations.

D080A01A-AAT

IF YOUR CAR MUST BE TOWED

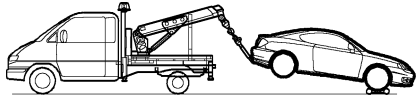

D080A01GK

o OK FOR AUTOMATIC OR MANUAL TRANSAXLE EQUIPPED VEHICLE

CAUTION:

Your car can be damaged if towed incorrectly!

If your car has to be towed, it should be done by your Hyundai dealer or a commercial tow truck service. This will help assure that your car is not damaged in towing. Also, professionals are generally aware of state and local laws governing towing. In any case, rather than risk damage to your car, it is suggested that you show this information to the tow truck operator. Be sure that a safety chain system is used and that all state and local laws are observed.

D080B01A-AAT

Towing a Car With a Manual Transaxle

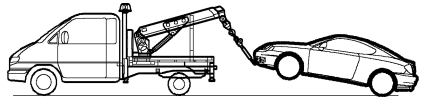

HGK199

o OK FOR AUTOMATIC OR MANUAL TRANSAXLE EQUIPPED VEHICLE WITH NO DAMAGE

- o If the car is being towed with the rear wheels on the ground, be sure the parking brake is released.
- o If the car is being towed with the front wheels on the ground, be sure that the transaxle is in neutral. Also, be sure that the ignition key is in the "ACC" position. This is necessary to prevent damage to the steering lock mechanism, which is not designed to hold the front wheels straight while the car is being towed.
- o If any of the loaded wheels or suspension components are damaged, a towing dolly must be used.

D080C02A-AAT

Towing a Car With an Automatic Transaxle

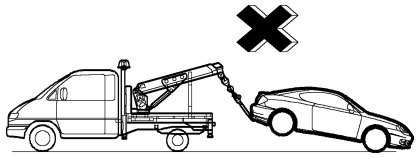

HGK200

- o NOT FOR AUTOMATIC TRANSAXLE EQUIPPED VEHICLE
- o OK FOR MANUAL TRANSAXLE

CAUTION:

A car with an automatic transaxle should never be towed from the rear with the front wheels on the ground. This can cause serious damage to the transaxle. If the car must be towed from the rear, a towing dolly must be used under the front wheels.

If the car is being towed with the rear wheels on the ground, be sure the parking brake is released.

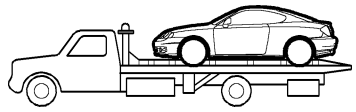

D080C01GK

- o OK FOR AUTOMATIC OR MANUAL TRANSAXLE EQUIPPED VEHICLE

NOTE:

Before towing, check the level of the transaxle fluid. If it is below the "HOT" mark on the dipstick, add fluid. If you cannot add fluid, a towing dolly must be used as described above.

D080D02A-AAT

Emergency Towing

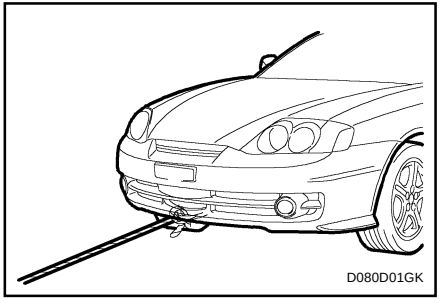

D080D01GK

For emergency towing when no commercial tow vehicle is available, attach a tow cable, chain or strap to one of the tie-down hooks under the front of your car. Do not attempt to tow your vehicle in this manner on any unpaved surface. This could result in serious damage to your car.

Nor should towing be attempted if the wheels, drive train, axles, steering or brakes are damaged. Before towing, be sure the transaxle is in neutral and the key is in "ACC" (with the engine off) or in the "ON" position (with the engine running). A driver must be in the towed car to steer it and operate the brakes.

CAUTION:
If the car is being towed with all four wheels on the ground, it can be towed only from the front. Be sure that the transaxle is in neutral. Do not tow at speeds greater than 30 mph (50 km/h) and for more than 15 miles (25 km). Be sure the steering is unlocked by placing the key in the "ACC" position. A driver must be in the towed vehicle to operate the steering and brakes.

D120A01A-AAT

IF YOU LOSE YOUR KEYS

If you lose your keys, many Hyundai dealers can make you a new key if you have your key number.

If you lock the keys inside your car and you cannot obtain a new key, many Hyundai dealers can use special tools to open the door for you.

4. CORROSION PREVENTION AND APPEARANCE CARE

E010A01A-AAT

CORROSION PROTECTION

Protecting Your Hyundai from Corrosion

By using the most advanced design and construction practices to combat corrosion, Hyundai produces cars of the highest quality, However, this is only part of the job. To achieve the long-term corrosion resistance your Hyundai can deliver, the owner's cooperation and assistance is also required.

E010B01A-AAT

Common Causes of Corrosion

The most common causes of corrosion on your car are:

- o Road salt, dirt and moisture that is allowed to accumulate underneath the car.
- o Removal of paint or protective coatings by stones, gravel, abrasion or minor scrapes and dents which leave unprotected metal exposed to corrosion.

E010C01A-AAT

High-Corrosion Areas

If you live in an area where your car is regularly exposed to corrosive materials, corrosion protection is particularly important. Some of the common causes of accelerated corrosion are road salts, dust control chemicals, ocean air and industrial pollution.

E010D01A-AAT

Moisture Breeds Corrosion

Moisture creates the conditions in which corrosion is most likely to occur. For example, corrosion is accelerated by high humidity, particularly when temperatures are just above freezing. In such conditions, the corrosive material is kept in contact with the car surfaces by moisture that is slow to evaporate.

Mud is particularly corrosive because it is slow to dry and holds moisture in contact with the vehicle. Although the mud appears to be dry, it can still retain the moisture and promote corrosion.

High temperatures can also accelerate corrosion of parts that are not properly ventilated so the moisture can be dispersed. For all these reasons, it is particularly important to keep your car clean and free of mud or accumulations of other materials. This applies not only to the visible surfaces but particularly to the underside of the car.

E020A01A-AAT

TO HELP PREVENT CORROSION

You can help prevent corrosion from getting started by observing the following:

E020B01A-AAT

Keep Your Car Clean

The best way to prevent corrosion is to keep your car clean and free of corrosive materials. Attention to the underside of the car is particularly important.

- o If you live in a high-corrosion area — where road salts are used, near the ocean, areas with industrial pollution, acid rain, etc.—, you should take extra care to prevent corrosion. In winter, hose off the underside of your car at least once a month and be sure to clean the underside thoroughly when winter is over.
- o When cleaning underneath the car, give particular attention to the components under the fenders and other areas that are hidden from view. Do a thorough job; just dampening the accumulated mud rather than washing it away will accelerate corrosion rather than prevent it. Water under high pressure and steam are particularly effective in removing accumulated mud and corrosive materials.
- o When cleaning lower door panels, rocker panels and frame members, be sure that drain holes are kept open so that moisture can escape and not be trapped inside to accelerate corrosion.

E020C01A-AAT

Keep Your Garage Dry

Don’t park your car in a damp, poorly ventilated garage. This creates a favorable environment for corrosion. This is particularly true if you wash your car in the garage or drive it into the garage when it is still wet or covered with snow, ice or mud. Even a heated garage can contribute to corrosion unless it is well ventilated so moisture is dispersed.

E020D01A-AAT

Keep Paint and Trim in Good Condition

Scratches or chips in the finish should be covered with "touch-up" paint as soon as possible to reduce the possibility of corrosion. If bare metal is showing through, the attention of a qualified body and paint shop is recommended.

E020E01A-AAT

Don’t Neglect the Interior

Moisture can collect under the floor mats and carpeting to cause corrosion. Check under the mats periodically to be sure the carpeting is dry. Use particular care if you carry fertilizers, cleaning materials or chemicals in the car.
These should be carried only in proper containers and any spills or leaks should be cleaned up, flushed with clear water and thoroughly dried.

E030A01GK-AAT

WASHING AND WAXING

Washing Your Hyundai

Never wash your car when the surface is hot from being in the sun. Always wash your car in the shade.

Wash your car frequently. Dirt is abrasive and can scratch the paint if it is not removed. Air pollution or acid rain may damage the paint and trim through chemical action if pollutants are allowed to remain in contact with the surface. If you live near the ocean or in an area where road salts or dust control chemicals are used, you should pay particular attention to the underside of the car. Start by rinsing the car to remove dust and loose dirt. In winter, or if you have driven through mud or muddy water, be sure to thoroughly clean the underside as well. Use a hard direct stream of water to remove accumulations of mud or corrosive materials. High pressure car washes may cause water to enter your vehicle. Use a good quality car-washing solution and follow the manufacturer's directions on the package. These are available at your Hyundai dealer or auto parts outlet. Don't use strong household detergents, gasoline, strong solvents or abrasive cleaning powders as these may damage the finish.
Use a clean sponge or cloth, rinse it frequently and don't damage the finish by rubbing too hard. For stubborn spots, dampen them frequently and remove them a little at a time.

To clean whitewall tires, use a stiff brush or soapy steel-wool scouring pad.
To clean plastic wheel covers, use a clean sponge or soft cloth and water.

To clean cast aluminum alloy wheels, use a mild soap or neutral detergent. Do not use abrasive cleaners. Protect the bare-metal surfaces by cleaning, polishing and waxing. Because aluminum is subject to corrosion, be sure to give aluminum alloy wheels special attention in winter. If you drive on salted roads, clean the wheels thoroughly afterwards.

After washing, be sure to rinse thoroughly. If soapy water dries on the finish, streaking will result.

When the weather is warm and the humidity low, you may find it necessary to rinse each section immediately after washing to avoid streaking.

After rinsing, dry the car using a damp chamois or soft, absorbent cloth. The reason for drying the car is to remove water from the car so it will dry without water spots. Don't rub, this can damage the finish.

If you find any nicks or scratches in the paint, use touch-up paint to cover them to prevent corrosion. To protect the paintwork of the car against corrosion, you must clean your Hyundai (at least once a month). Give special attention

to the removal of salt, mud and other substances on the underside of the splashboards of the car. Make sure that the outlets and the underside of the doors are open. Paint damage can be caused by small accumulation of tar, industrial precipitation, tree resin, insects and bird droppings, when not removed immediately. If water alone is not strong enough to remove the accumulated dirt, use a mild car washing solution. Be sure to rinse the surface after washing to remove the solution. Never allow the solution to dry on the painted surfaces.

E030B01A-AAT

Spot Cleaning

Don't use gasoline, strong solvents or corrosive cleaning agents. These can damage the finish of the car. To remove road tar, use turpentine on a clean, soft cloth or commercially available bug and tar remover. Be gentle.
To remove dead insects or tree sap, use warm water and mild soap or car-washing solution. Soak the spot and rub gently. If the paint has lost its luster, use a commercial car-cleaning polish.

E030C01A-AAT

Polishing and Waxing

Always wash and dry the car before polishing or waxing or using a combination cleaner and wax. Use a good quality commercial product and follow the manufacturer's directions on the container. Polish and wax the bright trim pieces as well as the paint.

E030D01A-AAT

When to Wax Again

You should polish and wax the car again when water no longer beads on a clean surface but spreads out over a larger area.

E030E01A-AAT

Maintaining Bumpers

Special precautions must be observed to preserve the appearance of the bumpers on your Hyundai. They are:

- Be careful not to spill battery electrolyte or hydraulic brake fluid on the bumpers. If you do, wash it off immediately with clear water.
- Be gentle when cleaning the bumper surfaces. They are made of soft plastic and the surface can be damaged if mistreated. Do not use abrasive cleaners. Use warm water and mild soap or car-washing solution.
- Do not expose the bumpers to high temperatures. For example, if you have your car repainted, do not leave the bumpers on the car if the car is going to be placed in a high-temperature paint booth.

E040A01A-AAT

CLEANING THE INTERIOR

To Clean the Vinyl Upholstery

To clean the vinyl upholstery, first remove loose dirt and dust with a vacuum cleaner. Then apply a solution of mild soap or detergent and water using a clean sponge or soft cloth. Allow this to stay on the surface to loosen the dirt, then wipe with a clean damp sponge or cloth. If all the dirt stains are not removed, repeat this procedure until the upholstery is clean. Do not use gasoline, solvent, paint thinner or other strong cleaners.

E040B01A-AAT

To Clean the Leather Upholstery (If installed)

In the normal course of use, leather upholstered surfaces will, like any material, pick-up dust and dirt. This dust and dirt must be cleaned off or it may work into the surface of the leather, causing damage.

Fine leather needs care, and should be cleaned when necessary. Washing leather thoroughly with soap and water will keep your leather lustrous, beautiful and ensure you have many years of wear.
Take a piece of cheese cloth and using any mild soap and lukewarm water, work up a good lather. Thoroughly wash the leather. Wipe clean with a slightly damp cloth and dry with soft cloth. Do this as often as the leather becomes soiled.

During tanning operations, sufficient oils are incorporated through processing that none need be applied during the life of the leather. Oil applied to the finished surface will in no way help the leather and may do more harm than

good. Varnishes and furniture polishes should never be used under any conditions.

E040C01A-AAT

Cleaning the Carpets

Use a foam-type carpet cleaner. Cleaners of this type are available in aerosol cans in liquid form or powder. Read the instructions and follow them exactly. Using a vacuum cleaner with the appropriate attachment, remove as much dirt from the carpets as possible. Apply the foam following the manufacturer's directions, then rub in overlapping circles. Do not add water. These cleaners work best when the carpet is kept as dry as possible.

E040D01A-AAT

Cleaning the Seat Belts

To clean the seat belts, use a cloth or sponge with mild soap or detergent and warm water. Do not use strong detergents, dye, bleach or abrasive materials on the seat belts as this may weaken the fabric.
While cleaning the belts, inspect them for excessive wear, cuts, fraying or other signs of damage and replace them if necessary.

E040E01A-AAT

Cleaning the Windows

You may use any household window cleaner on the windows. However, when cleaning the inside of the rear window be careful not to damage the rear window defroster wiring.

E050A01A-AAT

Any Questions?

If you have any questions about the care of your car, consult your Hyundai dealer.

5. VEHICLE MAINTENANCE REQUIREMENTS

F010A01A-AAT

MAINTENANCE INTERVALS

Service Requirements

To ensure that you receive the greatest number of miles of satisfying operation from your Hyundai, certain maintenance procedures must be performed. Although careful design and engineering have reduced these to a minimum, those that are required are of the utmost importance.

It is your responsibility to have these maintenance procedures performed to comply with the terms of the warranties covering your new Hyundai. The Owner's Handbook supplied with your new vehicle provides further information about these warranties.

F010B01A-AAT

Maintenance Requirements

The maintenance required for your Hyundai can be divided into three main areas:

- o Specified scheduled procedures
- o General checks
- o Do-it-yourself maintenance

F010C01A-AAT

Specified Scheduled Procedures

These are the procedures such as inspections, adjustments and replacements that are listed in the maintenance charts starting on page 5-3. These procedures must be performed at the intervals shown in the maintenance schedule to assure that your warranty remains in effect. Although it is strongly recommended that they be performed by the trained technicians at your Hyundai dealer, these procedures may be performed at any qualified service facility.

It is suggested that genuine Hyundai service parts be used for any required repairs or replacements. Other parts of equivalent quality such as engine oil, engine coolant, manual or auto transaxle oil, brake fluid and so on which are not supplied by Hyundai Motor Company or its distributor may be used without affecting your warranty coverage but you should always be sure these are equivalent to the quality of the original Hyundai parts. Your Owner's Handbook provides further information about your warranty coverage.

F010D01A-AAT

General Checks

These are the regular checks you should perform when you drive your Hyundai or you fill the fuel tank. A list of these items will be found on page 6-3.

F010E01A-AAT

Do-It-Yourself Maintenance

If you are mechanically inclined, own a few tools that are required and want to take the time to do so, you can inspect and service a number of items. For more information about doing it yourself, see Section 6.

F010F01A-AAT

A Few Tips

- o Whenever you have your Hyundai serviced, keep copies of the service records in your glovebox. This will help ensure that you can document that the required procedures have been performed to keep your warranties in effect. This is especially important when service is not performed by an authorized Hyundai dealer.
- o If you choose to do your own maintenance and repairs, you may find it helpful to have an official Hyundai Shop Manual. A copy of this publication may be purchased at your Hyundai dealer's parts department.

F020A02S-AAT

SCHEDULED MAINTENANCE REQUIREMENTS

- o Inspection should be performed any time a malfunction is experienced or suspected.
- o Receipts for all emission control system services should be retained to demonstrate

compliance with conditions of the emissions system warranty.

- After 120 months or 150,000 miles (240,000 km), continue to follow the prescribed maintenance intervals.
- For severe usage maintenance requirements, see page 5-5 of this section.

F030A01A-AAT

SCHEDULED MAINTENANCE

The following maintenance services must be performed to ensure good emission control and performance. Keep receipts for all vehicle emission services to protect your emission warranty. Where both mileage and time are shown, the frequency of service is determined by whichever occurs first.

F030B02GK-AAT

R :Replace I : Inspect and, after inspection, clean, adjust, repair or replace if necessary.

No.	DESCRIPTION	MILES X 1000	7.5	15	22.5	30	37.5	45	52.5	60	67.5	75	82.5	90	97.5	105	112.5	120	127.5	135	142.5	150
		KILOMETERS X 1000	12	24	36	48	60	72	84	96	108	120	132	144	156	168	180	192	204	216	228	240
		MONTHS	6	12	18	24	30	36	42	48	54	60	66	72	78	84	90	96	102	108	114	120
	EMISSION CONTROL ITEMS																					
1	ENGINE OIL AND FILTER		Every 7,500 mile (12,000 km) or 12 month change																			
2	FUEL FILTER								R							R						
3	FUEL LINES, FUEL HOSES AND CONNECTIONS					I				I				I				I				I
4	VACUUM AND CRANKCASE VENTILATION HOSES								I							I						
5	VAPOR HOSE AND FUEL FILLER CAP					I				I				I				I				I
6	AIR CLEANER FILTER					R				R				R				R				R
7	SPARK PLUGS (PLATINUM COATED)									R								R				
8	VALVE CLEARENCE (2.0 L)									I								I				

F030C01GK-AAT

R : Replace I : Inspect and, after inspection, clean, adjust, repair or replace if necessary

No.	DESCRIPTION	MILES X 1000	7.5	15	22.5	30	37.5	45	52.5	60	67.5	75	82.5	90	97.5	105	112.5	120	127.5	135	142.5	150
		KILOMETERS X 1000	12	24	36	48	60	72	84	96	108	120	132	144	156	168	180	192	204	216	228	240
		MONTHS	6	12	18	24	30	36	42	48	54	60	66	72	78	84	90	96	102	108	114	120
	GENERAL ITEMS																					
1	DRIVE BELT (WATER PUMP, GENERATOR AND A/CON)					I				I				I				I				I
2	COOLANT					R				R				R				R				R
3	TIMING BELT					I				R*1				I				R*1				I
4	MANUAL TRANSAXLE OIL					I				I				I				I				I
5	AUTOMATIC TRANSAXLE FLUID		I		I		I		I		I		I		R		I		I		I
6	BRAKE FLUID				I				I				I				I				I
7	BRAKE HOSES AND LINES		I		I		I		I		I		I		I		I		I		I
8	REAR BRAKE DRUMS/LININGS, PARKING BRAKE				I				I				I				I				I
9	BRAKE PADS, CALIPERS AND ROTORS		I		I		I		I		I		I		I		I		I		I
10	EXHAUST PIPE AND MUFFLER		I		I		I		I		I		I		I		I		I		I
11	SUSPENSION MOUNTING BOLTS		I		I		I		I		I		I		I		I		I		I
12	STEERING GEAR BOX, LINKAGE & BOOTS/LOWER ARM BALL JOINT		I		I		I		I		I		I		I		I		I		I
13	POWER STEERING PUMP, BELT AND HOSES					I				I				I				I				I
14	DRIVESHAFTS AND BOOTS	I	I	I	I	I	I	I	I	I	I	I	I	I	I	I	I	I	I	I	I
15	AIR CONDITIONING REFRIGERANT		I		I		I		I		I		I		I		I		I		I
16	AIR FILTER (FOR BLOWER UNIT)	SEE NOTE *2																				

Note :

*1 - FOR CALIFORNIA, THIS MAINTENANCE IS RECOMMENDED, BUT NOT REQUIRED

*2 - FOR EVERY 12 MONTHS OR 12,000 MILES (20,000 KM), WHICHEVER OCCURS FIRST : "R"

F040A01GK-AAT

MAINTENANCE UNDER SEVERE USAGE CONDITIONS

The following items must be serviced more frequently on cars normally used under severe driving conditions. Refer to the chart below for the appropriate maintenance intervals.

R : Replace I : Inspect and, after inspection, clean, adjust, repair or replace if necessary

MAINTENANCE ITEM	MAINTENANCE OPERATION	MAINTENANCE INTERVALS	DRIVING CONDITION
ENGINE OIL AND FILTER	R	EVERY 3,000 MILES (5,000 KM) OR 3 MONTHS	A, B, C, F, H
AIR CLEANER FILTER	R	MORE FREQUENTLY	C, E
SPARK PLUGS	R	MORE FREQUENTLY	B, H
BRAKE PADS, CALIPERS AND ROTORS	I	MORE FREQUENTLY	C, D, G, H
REAR BRAKE DRUMS/LININGS/PADS, PARKING BRAKE	I	MORE FREQUENTLY	C, D, G, H
STEERING GEAR RACK, LINKAGE & BOOTS/ LOWER ARM BALL JOINT	I	MORE FREQUENTLY	C, D, E, F, G
DRIVESHAFTS AND BOOTS	I	EVERY 7,500 MILES (12,000 KM) OR 6 MONTHS	C, E, F, G
MANUAL TRANSAXLE OIL	R	EVERY 60,000 MILES (96,000 KM)	A, C, D, E, F, G, H, I, J
AUTOMATIC TRANSAXLE FLUID	R	EVERY 30,000 MILES (48,000 KM)	A, C, E, F, G, H, I
AIR FILTER (FOR BLOWER UNIT)	R	MORE FREQUENTLY	C, E

SEVERE DRIVING CONDITIONS

A - Repeated short distance driving
B - Extensive idling
C - Driving in dusty, rough roads
D - Driving in areas using salt or other corrosive materials or in very cold weather
E - Driving in sandy areas
F - More than 50% driving in heavy city traffic during hot weather above 90°F (32°C)
G - Driving in mountainous areas
H - Towing a trailer
I - Driving for patrol car, taxi, commercial car or vehicle towing
J - Driving over 100 mph

F060A01A-AAT

EXPLANATION OF SCHEDULED MAINTENANCE ITEMS

F060M01A-AAT

o Engine Oil and Filter

The engine oil and filter should be changed at the intervals specified in the maintenance schedule. If the car is being driven in severe conditions, more frequent oil and filter changes are required.

F060C01A-AAT

o Fuel Filter

A clogged filter can limit the speed at which the vehicle may be driven, damage the emission system and cause hard starting. If an excessive amount of foreign matter accumulates in the fuel tank, the filter may require replacement more frequently.
After installing a new filter, run the engine for several minutes, and check for leaks at the connections. Fuel filters should be installed by trained technicians.

F060D01A-AAT

o Fuel Lines, Fuel Hoses and Connections

Check the fuel lines, fuel hoses and connections for leakage and damage. Have a trained technician replace any damaged or leaking parts immediately.

F060F01A-AAT

o Vacuum, Crankcase Ventilation Hoses

Inspect the surface of hoses for evidence of heat and/or mechanical damage. Hard and brittle rubber, cracking, tears, cuts, abrasions, and excessive swelling indicate deterioration. Particular attention should be paid to examine those hose surfaces nearest to high heat sources, such as the exhaust manifold.
Inspect the hose routing to assure that the hoses do not come in contact with any heat source, sharp edges or moving component which might cause heat damage or mechanical wear. Inspect all hose connections, such as clamps and couplings, to make sure they are secure, and that no leaks are present. Hoses should be replaced immediately if there is any evidence of deterioration or damage.

F060G01A-AAT

o Vapor Hose and Fuel Filler Cap

The vapor hose and fuel filler cap should be inspected at those intervals specified in the maintenance schedule. Make sure that a new vapor hose or fuel filler cap is correctly replaced.

F060H01A-AAT

o Air cleaner filter

A Genuine Hyundai air cleaner filter is recommended when filter is replaced.

F060J01A-AAT

o Spark plugs

Make sure to install new spark plugs of the correct heat range.

F060B02A-AAT

o Drive Belts

Inspect all drive belts for evidence of cuts, cracks, excessive wear or oil saturation and replace if necessary. Drive belts should be checked periodically for proper tension and adjusted as necessary.

F070C01A-AAT

o Coolant

The coolant should be changed at the intervals specified in the maintenance schedule.

F060E01A-AAT

o Timing belt

Inspect all parts related to the timing belt for damage and deformation. Replace any damaged parts immediately.

F070D01A-AAT

o Manual transaxle oil

Inspect the manual transaxle oil according to the maintenance schedule.

NOTE:
If the oil level is low, check for possible leaks before adding oil. Do not overfill.

F070E04A-AAT

o Automatic Transaxle Fluid

The fluid level should be in the "HOT" range of the dipstick, after the engine and transaxle are at normal operating temperature. Check the automatic transaxle fluid level with the engine running and the transaxle in neutral, with the parking brake properly applied. Use HYUNDAI GENUINE ATF, DIAMOND ATF SP-III, SK ATF SP-III when adding or changing fluid.

F070F01A-AAT

o Brake Hoses and Lines

Visually check for proper installation, chafing, cracks, deterioration and any leakage. Replace any deteriorated or damaged parts immediately.

F070G02A-AAT

o Brake Fluid

Check brake fluid level in the brake fluid reservoir. The level should be between “MIN” and “MAX” marks on the side of the reservoir. Use only hydraulic brake fluid conforming to DOT 3 or DOT 4.

F070H01A-AAT

o Rear Brake Drums and Linings/ Parking Brake

Check the rear brake drums and linings for scoring, burning, leaking fluid, broken parts, and excessive wear. Inspect the parking brake system including the parking brake lever and cables. For detailed service procedures, refer to the Shop Manual.

F070J01A-AAT

o Brake Pads, Calipers and Rotors

Check the pads for excessive wear, discs for run out and wear, and calipers for fluid leakage.

F070K01A-AAT

o Exhaust Pipe and Muffler

Visually inspect the exhaust pipes, muffler and hangers for cracks, deterioration, or damage. Start the engine and listen carefully for any exhaust gas leakage. Tighten connections or replace parts as necessary.

F070L01A-AAT

o Suspension Mounting Bolts

Check the suspension connections for looseness or damage. Retighten to the specified torque.

F070M01A-AAT

o Steering gear box, linkage & boots/ lower arm ball joint

With the vehicle stopped and engine off, check for excessive free-play in the steering wheel. Check the linkage for bends or damage. Check the dust boots and ball joints for deterioration, cracks, or damage. Replace any damaged parts.

F070N01A-AAT

o Power Steering Pump, Belt and Hoses

Check the power steering pump and hoses for leakage and damage. Replace any damaged or leaking parts immediately. Inspect the power steering belt for evidence of cuts, cracks, excessive wear, oiliness and proper tension. Replace or adjust it if necessary.

F070P01A-AAT

o Driveshafts and Boots

Check the drive shafts, boots and clamps for cracks, deterioration, or damage. Replace any damaged parts and, if necessary, repack the grease.

F070Q01A-AAT

o Air Conditioning Refrigerant

Check the air conditioning lines and connections for leakage and damage. Check air conditioning performance according to the relevant shop manual if necessary.

F060N01E-AAT

o Valve Clearance

Inspect excessive valve noise and/or engine vibration and adjust if necessary. A qualified technician should perform the operation.

6. DO-IT-YOURSELF MAINTENANCE

G010A01GK-AAT

ENGINE COMPARTMENT (2.0 DOHC)

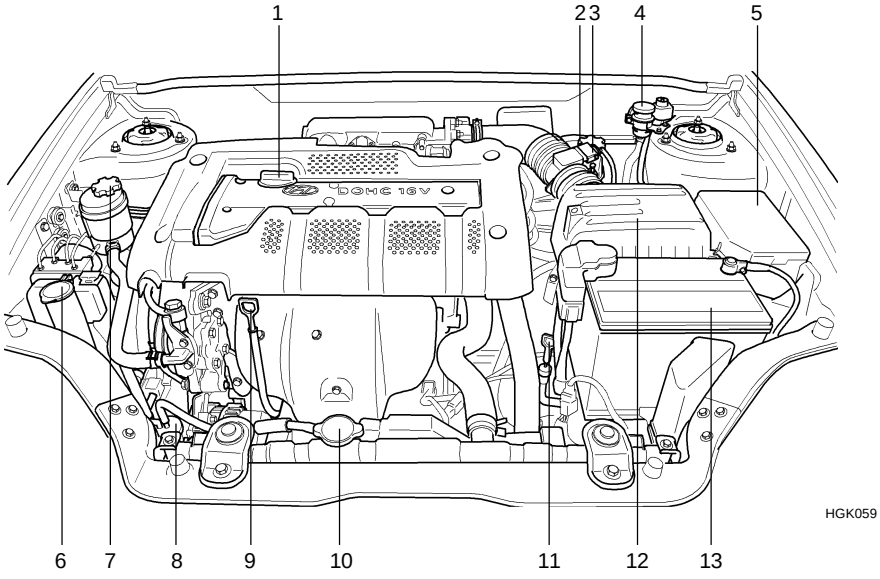

CAUTION:
When inspecting or servicing the engine, you should handle tools and other heavy objects carefully so that the plastic rocker cover of the engine is not damaged.

1. Engine oil filler cap
2. Brake Booster
3. Brake fluid reservoir
4. Clutch fluid reservoir (If installed)
5. Relay box
6. Windshield washer fluid reservoir cap
7. Power steering fluid reservoir
8. Engine coolant reservoir
9. Engine oil level dipstick
10. Radiator cap
11. Automatic transaxle fluid level dipstick (If installed)
12. Air cleaner
13. Battery

G010B01GK-GAT

ENGINE COMPARTMENT (2.7 V6)

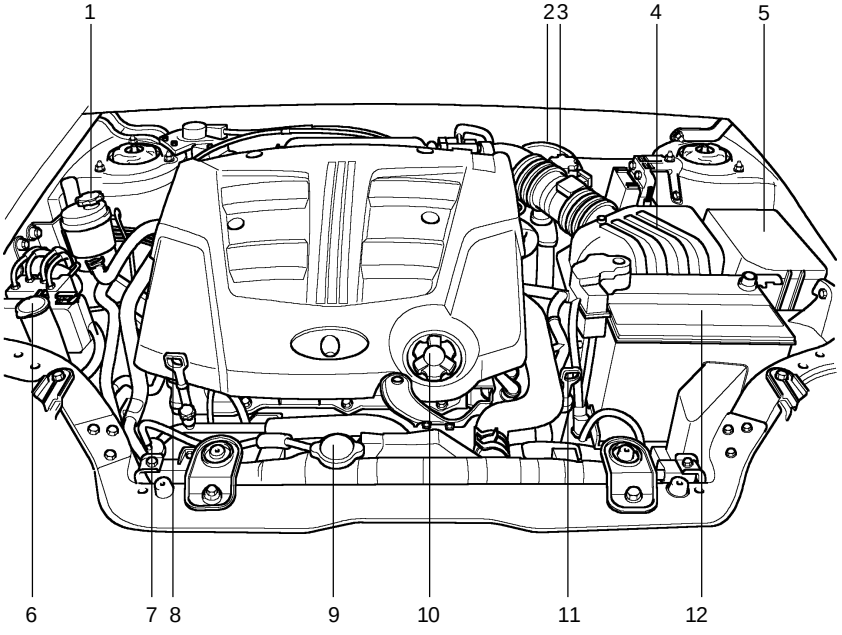

1. Power steering fluid reservoir
2. Brake Booster
3. Brake fluid reservoir
4. Air Cleaner
5. Relay box
6. Windshield washer fluid reservoir cap
7. Engine coolant reservoir
8. Engine oil level dipstick
9. Radiator cap
10. Engine oil filler cap
11. Automatic transaxle fluid level dipstick (If installed)
12. Battery

G020A01A-AAT

GENERAL CHECKS

Engine Compartment

The following should be checked regularly:

- o Engine oil level and condition
- o Transaxle fluid level and condition
- o Brake fluid level
- o Clutch fluid level
- o Engine coolant level
- o Windshield washer fluid level
- o Accessory drive belt condition
- o Engine coolant hose condition
- o Fluid leaks (on or below components)
- o Power steering fluid level
- o Battery condition

G020B01A-AAT

Vehicle Exterior

The following should be checked monthly:

- o Overall appearance and condition
- o Wheel condition and wheel nut torque
- o Air filter condition
- o Exhaust system condition
- o Light condition and operation
- o Windshield glass condition
- o Wiper blade condition
- o Paint condition and body corrosion
- o Fluid leaks
- o Door and hood lock condition
- o Tire pressure and condition (including spare tire)

G020C01A-AAT

Vehicle Interior

The following should be checked each time when the vehicle is driven:

- o Lights operation
- o Windshield wiper operation
- o Horn operation
- o Defroster, heating system operation (and air conditioning, if installed)
- o Steering operation and condition
- o Mirror condition and operation
- o Turn signal operation
- o Accelerator pedal operation
- o Brake operation, including parking brake
- o Manual transaxle operation, including clutch operation
- o Automatic transaxle operation, including "Park" mechanism operation
- o Seat control condition and operation
- o Seat belt condition and operation
- o Sunvisor operation

If you notice anything that does not operate correctly or appears to be functioning incorrectly, inspect it carefully and seek assistance from your Hyundai dealer if service is needed.

G030A01A-AAT

CHECKING THE ENGINE OIL

Engine oil is essential to the performance and service of the engine. It is suggested that you check the oil level at least once a week in normal use and more often if you are on a trip or driving in severe conditions.

G030B01A-AAT

Recommended Oil

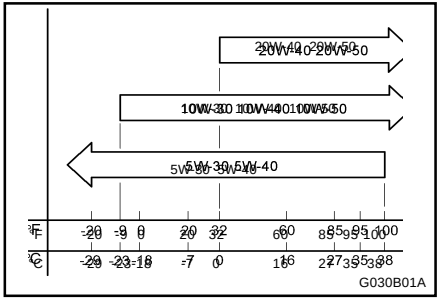

SH, SG or SG/CD (API) multi-grade and fuel efficient oil is recommended.

G030C01A-AAT

To Check the Oil Level

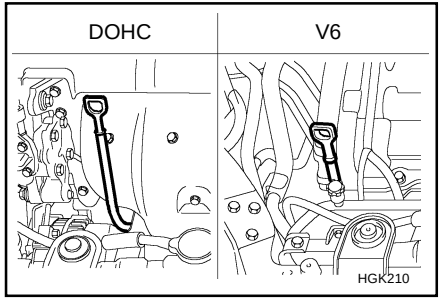

Before checking the oil, warm up the engine to the normal operating temperature and be sure your car is parked on level ground. Turn the engine off.
Wait a minute, then remove the dipstick, wipe it off, fully reinsert the dipstick and withdraw it again. Then note the highest level the oil has reached on the dipstick. It should be between the upper ("FULL") and lower ("LOW") range.

G030D01A-AAT

Adding Oil

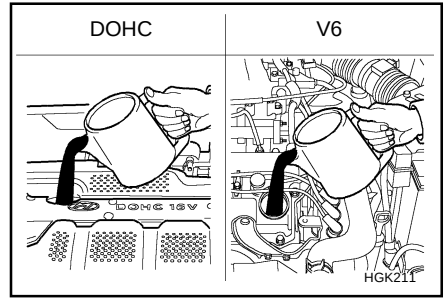

If the oil level is close to or below the "LOW" mark, add oil until it reaches the "FULL" mark. To add oil:

1. Remove the oil filler cap by turning it counter-clockwise.
2. Add oil, then check the level again. Do not overfill.
3. Replace the cap by turning it clockwise.

The distance between the "FULL" and "LOW" marks is equal to about 1 quart of oil.

G040A02GK-AAT

CHANGING THE OIL AND FILTER

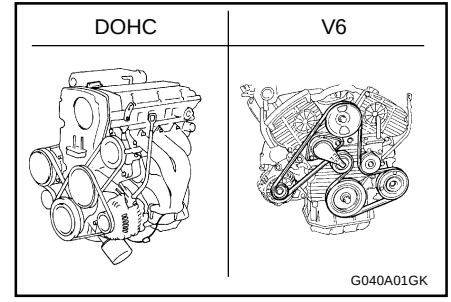

The engine oil and filter should be changed at those intervals specified in the maintenance schedule in Section 5. If the car is being driven in severe conditions, more frequent oil and filter changes are required.

The procedure for changing the oil and filter is as follows:

1. Park the car on level ground and set the parking brake. Start the engine and let it warm up until the needle on the coolant temperature gauge moves above the lowest mark. Turn the engine off and place the gear selector lever in "P" (automatic) or reverse gear (manual transaxle). Set the parking brake.
2. Open the hood and remove the engine oil filler cap.

3. Slide underneath the car and loosen the drain plug by turning it counterclockwise with a wrench of the proper size. Be sure that a drain pan is in position to catch the oil as it drains out, then remove the drain plug.

WARNING:
Be very careful when draining the engine oil as it may be hot enough to burn you!

4. When the oil has stopped draining, replace the drain plug using a new washer and retighten by turning it clockwise.

   Tightening torque is:
   4.5 ~ 4.0 kgf.m (2.0L)
   4.5 ~ 3.5 kgf.m (2.7L)

5. Remove the oil filter by turning it counterclockwise with a oil filter wrench of the proper size. A certain amount of oil will come out when you remove the filter. So be sure to have your drain pan in place underneath it.
6. Install a new oil filter in accordance with the instructions on the carton or on the filter itself. Do not over-tighten. **(Tightening torque : 1.2 ~ 1.6 kgf.m)**
   Be sure that the mounting surface on the engine is clean and that the old gasket is removed completely. Lubricate the new gasket on the filter with clean engine oil before installation.
7. Refill the crankcase with the recommended engine oil. Refer to the specification in chapter 9 for engine oil capacity.
8. Start the engine and check to be sure no oil is leaking from the drain plug or oil filter.
9. Shut off the engine and recheck the oil level.

NOTE:
Always dispose of used engine oil in an environmentally acceptable manner. It is suggested that it be placed in a sealed container and taken to a service station for reclamation. Do not pour the oil on the ground or put it into the household trash.

WARNING:
Used motor oil may cause irritation or cancer of the skin if left in contact with the skin for prolonged periods of time. Wash your hands thoroughly with soap and warm water as soon as possible after handling used oil.

G050A01A-AAT

CHECKING AND CHANGING THE ENGINE COOLANT

WARNING:
Do not remove the radiator cap when the engine is hot. When the engine is hot, the engine coolant is under pressure and may erupt through the opening if the cap is removed. You could be seriously burned if you do not observe this precaution. Do not remove the radiator cap until the radiator is cool to the touch.

G050B01A-AAT

Recommended Engine Coolant

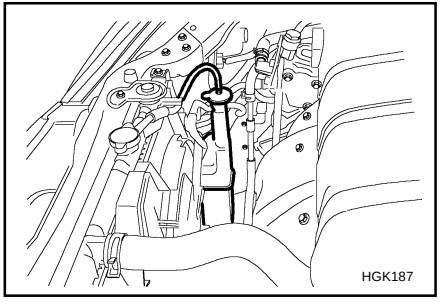

Use a high quality ethylene-glycol coolant in a 50/50 mix with water. The engine coolant should be compatible with aluminum engine parts. Additional corrosion inhibitors or additives should not be used. The cooling system must be maintained with the correct concentration and type of engine coolant to prevent freezing and corrosion. Never allow the concentration of antifreeze to exceed the 60% level or go below the 35% level, or damage to the cooling system may result. For proper concentration when adding or replacing the engine coolant, refer to the following table.

Ambient temperature °C (°F)	Engine Coolant concentration	
	Antifreeze solution	Water
-15 (5)	35%	65%
-25 (-13)	40%	60%
-35 (-31)	50%	50%
-45 (-49)	60%	40%

G050C01A-AAT

To Check the Coolant Level

The coolant level can be seen on the side of the plastic coolant reservoir. The level of the coolant should be between the "LOW" and "FULL" lines on the reservoir when the engine is cold. If the level is below the "LOW" mark, add engine coolant to bring it up between "LOW" and "FULL". If the level is low, inspect for coolant leaks and recheck the fluid level frequently. If the level drops again, visit your Hyundai dealer for an inspection and diagnosis of the reason.

G050D02A-AAT

To Change the Engine Coolant

The engine coolant should be changed at those intervals specified in the vehicle maintenance schedule in Section 5.

CAUTION:

Engine coolant can damage the finish of your car. If you spill engine coolant on the car, wash it off thoroughly with clean water.

1. Park the car on level ground, set the parking brake and remove the radiator cap when cool.
2. Be sure your drain receptacle is in place. Open the drain cock on the radiator. Allow all the engine coolant to drain from the cooling system, then securely close the drain cock.
3. Check Section 9 for the capacity of the cooling system in your car. Then, following the manufacturer's directions on the engine coolant container, add the appropriate quantity of coolant to the radiator.
4. Turn the radiator cap counterclockwise without pressing down on it, until it stops. This relieves any pressure remaining in the cooling system. And remove the radiator cap by pushing down and turning counterclockwise. Now fill the radiator with clean demineralized or distilled water. Continue to add clean demineralized or distilled water in small quantities until the fluid level stays up in the radiator neck.
5. Replace the radiator and reservoir caps and check to be sure the drain cocks are fully closed and not leaking.

WARNING:

The cooling fan is controlled by engine coolant temperature and may sometimes operate even when the engine is not running. Use extreme caution when working near the blades of the coolant fan so that you are not injured by a rotating fan blade. As the engine coolant temperature decreases, the fan will automatically shut off. This is a normal condition.

G060A01GK-AAT

SPARK PLUGS

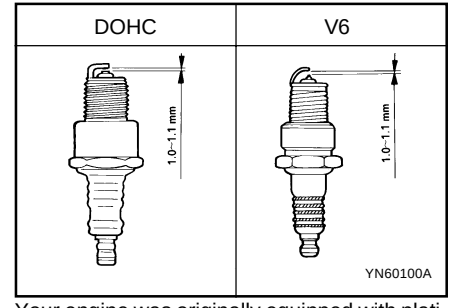

Your engine was originally equipped with platinum-tipped spark plugs. Platinum-tipped spark plugs will last longer than conventional type

spark plugs and can be identified by blue lines on the ceramic shell.

NOTE:
Do not clean or regap platinum-tipped spark plugs.

G060B01GK-AAT

Replacing the Spark Plugs

The spark plugs should be changed at the intervals specified in the vehicle maintenance schedule in Section 5 or whenever engine performance indicates they should be changed. Symptoms that suggest poor spark plug performance include engine misfiring under load, loss of fuel economy, poor acceleration, etc. When spark plugs are replaced, always use spark plugs recommended by Hyundai. The use of other spark plugs can result in loss of performance, radio interference or engine damage.

NOTE:
When replacing the spark plug, always use the genuine parts recommended.

Recommended Spark Plugs:

Type	Remark
RC10YC4(CHAMPION) BKR5ES-11(NGK)	2.0L
RC10PYPB4(CHAMPION) PFR5N-11(NGK)	2.7L

G060C02GK-GET

Changing the Spark Plugs

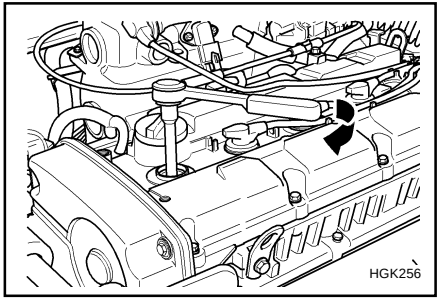

You will find it easier to change spark plugs if the engine is cold. Always change one spark plug at a time. This helps avoid getting the wires mixed up.

1. Remove the engine rocker cover.

NOTE:
It is recommended that the spark plugs (For 2.7L Engines) should be changed by an authorized Hyundai dealer.

2. Using a clean cloth, remove any dirt that has accumulated around the base of the spark plug so it cannot fall into the cylinder when the spark plug is removed.
3. To remove the spark plug cable, pull straight up on the insulated connector, not the cable. Pulling on the cable may damage the carbon core conductor.

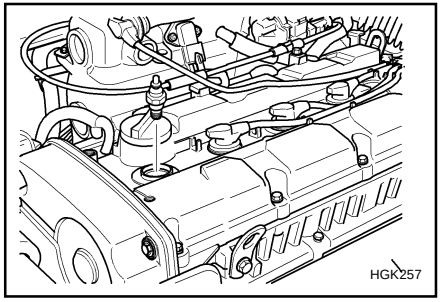

WARNING:
It is recommended that the engine be cool or cold when changing the spark plugs. If the engine is hot, you could burn yourself on the insulated connector, the spark plug or the engine itself.

4. When preparing to remove the old spark plug, guide the socket down over the spark plug, being careful not to damage the ceramic insulator.
5. To remove the old spark plug, turn the wrench handle in a counterclockwise direction.
6. To install the new spark plug, guide the socket down over the spark plug, being careful not to damage the ceramic insulator.

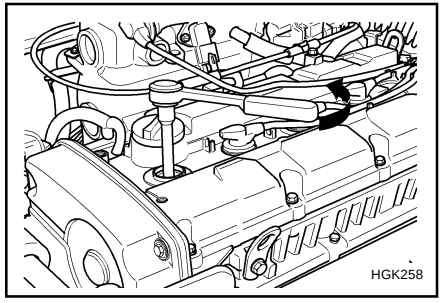

NOTE:

Spark plugs should be tightened firmly. Overtightening can damage the threads in the aluminum cylinder head. Also, leaving them too loose can cause the spark plug to get very hot and possibly result in damage to the engine.

7. Replace the cable by pushing the insulated connector directly down onto the electrode. Check to be sure it has snapped into place and can't fall off.

G070A01GK-AAT

CHANGING THE AIR CLEANER FILTER

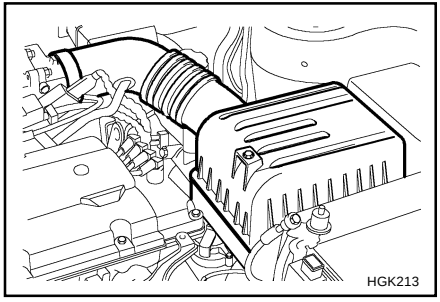

To change the filter, unsnap the clips around the cover. When this is done, the cover can be lifted off, the old filter removed and the new filter put in its place. Genuine Hyundai Replacement Parts are recommended.

CAUTION:

- **Operating your vehicle without a proper air filter in place can result in excessive engine wear.**
- **Be careful that dust or dirt does not enter the air intake, or damage may result.**

G080A02A-AAT

WINDSHIELD WIPER BLADES

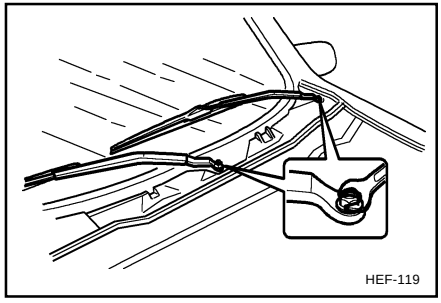

The wiper blades should be carefully inspected from time to time and cleaned to remove accumulations of road film or other debris. To clean the wiper blades and arms, use a clean sponge or cloth with a mild soap or detergent and water. If the wipers continue to streak or smear the glass, replace them with Genuine Hyundai Replacement Parts or their equivalent.

CAUTION:

- **Do not operate the wipers on dry glass. This can result in more rapid wear of the wiper blades and may scratch the glass.**
- **Keep the blade rubber out of contact with petroleum products such as engine oil, gasoline etc.**

G090A01A-AAT

FILLING THE WASHER RESERVOIR

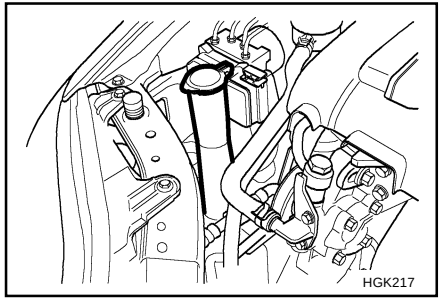

The washer fluid reservoir supplies fluid to the windshield washer system.
A good quality washer fluid should be used to fill the washer reservoir. The fluid level should be checked more frequently during bad weather or whenever the washer system is in more frequent use.
The capacity of the washer reservoir is 3.2 U.S. quarts (3.0 Liters).

CAUTION:

- **Radiator anti-freeze (engine coolant) should not be used in the washer system because it will damage the car's finish.**
- **The washer lever should not be pulled and the washer should not be operated if the washer reservoir is empty. This can damage the washer fluid pump.**

G100A02GK-AAT

CHECKING THE TRANSAXLE OIL (MANUAL)

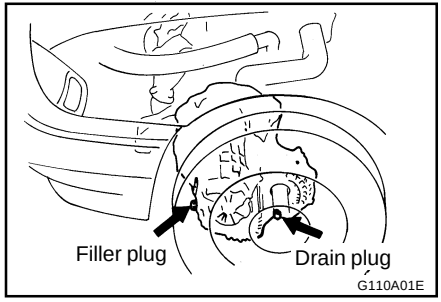

Transaxle lubricant in the manual transaxle should be checked at those intervals specified in the vehicle maintenance schedule in Section 5.

Recommended Oil

Use only HYUNDAI GENUINE PARTS MTF 75W/90 (API GL-4) or equivalents in the manual transaxle.

Manual Transaxle Oil Capacity

The oil capacity of the manual transaxle:
2.3 us quarts (2.15L)

WARNING:

It is always better to check the transaxle oil level when the engine is cool or cold. If the engine is hot, you should exercise great caution to avoid burning yourself on hot engine or exhaust parts.

G100B01A-AAT

To Check the Manual Transaxle Fluid Level

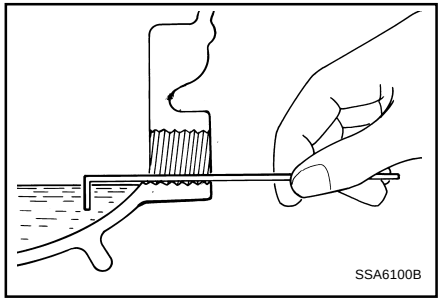

Park the car on level ground with the engine off.

1. Using a wrench of the correct size, loosen the oil filler plug by turning it counterclockwise and remove it with your fingers.
2. Use your finger or suitable tool to feel inside the hole. The oil level should be at its bottom edge. If it is not, check for leaks before adding oil. To refill the transaxle or bring the oil level up,add oil slowly until it reaches the proper level. Do not overfill.
3. Replace the plug, screw it in with your fingers and then tighten securely with the wrench.

G110A01A-AAT

CHECKING THE TRANSAXLE FLUID (AUTOMATIC)

Transaxle fluid in the automatic transaxle should be checked at those intervals specified in the vehicle maintenance schedule in Section 5.

G110B03A-AAT

Recommended Fluid

Your Hyundai automatic transaxle is specially designed to operate with HYUNDAI GENUINE ATF, DIAMOND ATF SP-III or SK ATF SP-III. Damage caused by a nonspecified fluid is not covered by your new vehicle limited warranty.

G110C02Y-AAT

Transaxle Fluid Capacity

The fluid capacity of the automatic transaxle is 8.2 U.S. quarts (7.8 liters).

WARNING:

The transaxle fluid level should be checked when the engine is at normal operating temperature. This means that the engine, radiator, exhaust system etc., are very hot. Exercise great care not to burn yourself during this procedure.

G110D02Y-AAT

To Check the Transaxle Fluid Level

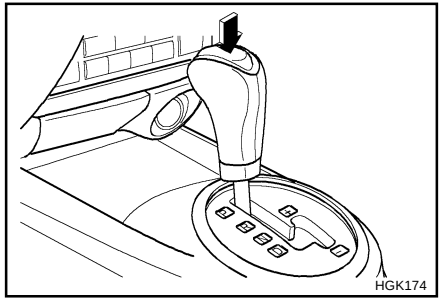

Park the car on level ground with the parking brake engaged. When the transaxle fluid level is checked, the transaxle fluid should be at normal operating temperature and the engine idling.

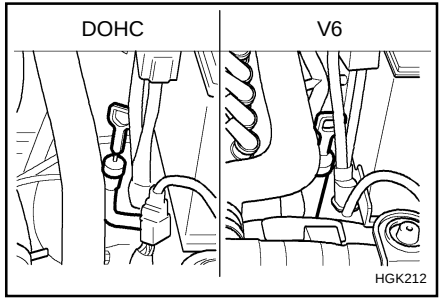

While the engine is idling, apply the brakes and move the gear selector lever from "P" to each of its other positions — "R", "N", "D" — and then return to "N" or "P". With the engine still idling:

1. Open the hood, being careful to keep hands, long hair and clothing clear of any moving parts.
2. Remove the transaxle dipstick, wipe it clean, reinsert the dipstick as far as it will go, then remove it again. Now check the fluid level on the dipstick. It should be in the "HOT" range on the dipstick.
3. If the transaxle fluid level is low, use a funnel to add transaxle fluid through the dipstick tube until the level reaches the "HOT" range. Do not overfill.

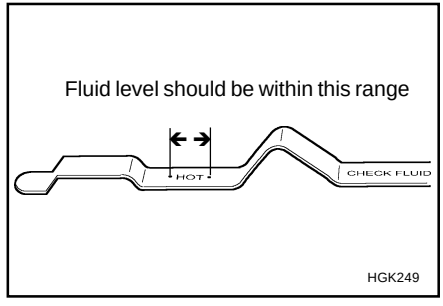

WARNING:
The cooling fan is controlled by engine coolant temperature and may sometimes operate even when the engine is not running. Use extreme caution when working near the blades of the cooling fan, so that you are not injured by a rotating fan blade. As the engine coolant temperature decreases, the fan will automatically shut off. This is a normal condition.

G120A01A-AAT

CHECKING THE BRAKES

CAUTION:
Because brakes are essential to the safe operation of the car, it is suggested that they be checked and inspected by your Hyundai dealer. The brakes should be checked and inspected for wear at those intervals specified in the vehicle maintenance schedule in Section 5.

G120B01A-AAT

Checking the Brake Fluid Level

WARNING:
Use caution when handling brake fluid. It can damage your vision if it gets into your eyes. It will also damage your vehicle's paint if spilled on it and not removed immediately.

G120C02A-AAT

Recommended Brake Fluid

Use only hydraulic brake fluid conforming to DOT 3 or DOT 4 specifications in your braking system. Follow the instructions printed on the container.

G120D01A-AAT

To Check the Fluid Level

The fluid level in the brake fluid reservoir should be checked periodically. The level should be between the "MIN" and "MAX" marks on the side of the reservoir. If the level is at or below the "MIN" mark, carefully add fluid to bring it up to "MAX". Do not overfill.

G120E02A-AAT

Adding Brake Fluid

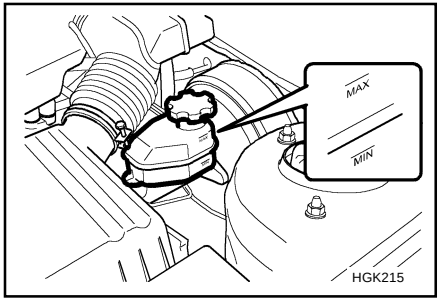

WARNING:
Handle brake fluid carefully. It can damage your vision if it gets into your eyes. Use only DOT 3 or DOT 4 specification fluid from a sealed container. Do not allow the fluid can or reservoir to remain open any longer than required. This will prevent entry of dirt and moisture which can damage the brake system and cause improper operation.

To add brake fluid, first wipe away any dirt then unscrew the fluid reservoir cap. Slowly pour the recommended fluid into the reservoir. Do not overfill. Carefully replace the cap on the reservoir and tighten.

G130A01S-AAT

CHECKING THE CLUTCH FLUID

To Check the Clutch Fluid

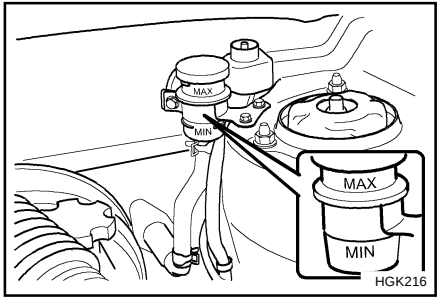

The clutch fluid level in the master cylinder should be checked when performing other under hood services. The system should be checked for leakage at the same time.
Check to make certain that the clutch fluid level is always between the "MAX" and "MIN" level markings on the fluid reservoir. Fill as required. Fluid loss indicates a leak in the clutch system which should be inspected and repaired immediately. Consult your Hyundai dealer.

G130B02A-AAT

To Replace the Fluid

Recommended brake fluid conforming to DOT 3 or DOT 4 specification should be used. The reservoir cap must be fully tightened to avoid contamination from foreign matter or moisture.

NOTE:
Do not allow any other liquids to contaminate the brake fluid. Seal damage will result.

WARNING:
Use caution when handling brake fluid. It can damage your vision if you get it in your eyes. It will also damage your vehicle's paint if spilled on it and not removed immediately.

G140A01A-AAT

AIR CONDITIONING CARE

Keeping the Condenser Clean

The air conditioning condenser (and engine radiator) should be checked periodically for accumulation of dirt, dead insects, leaves, etc. These can interfere with maximum cooling efficiency. When removing such accumulations, brush or hose them away carefully to avoid bending the cooling fins.

G140B01A-AAT

Checking the Air Conditioning Operation

1. Start the engine and let it run at a fast idle for several minutes with the air conditioning set at the maximum cold setting.
2. If the air coming out of the in-dash vents is not cold, have the air conditioning system inspected by your Hyundai dealer.

CAUTION:
Running the air conditioning system for extended periods of time with a low refrigerant level may damage the compressor.

G140C01A-AAT

Lubrication

To lubricate the compressor and the seals in the system, the air conditioning should be run for at least 10 minutes each week. This is particularly important during cool weather when the air conditioning system is not otherwise in use.

G140D01A-AAT

Checking the Compressor Drive Belt

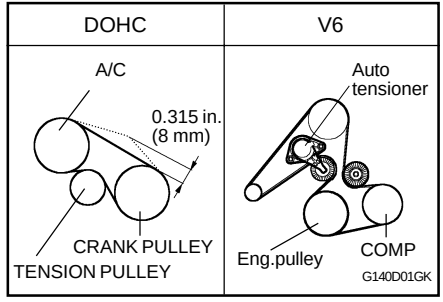

When the air conditioning is being used regularly, the compressor drive belt tension should be checked at least once a month with the engine turned off.
To check the drive belt tension, press down on the belt halfway between the engine crankshaft and compressor pulleys. Pressing with your finger, you should not be able to deflect this belt anymore than 1/3 of an inch. If you have the instruments to check it, with a force of 22 lb. (98N), the deflection should be 0.315 inches (approx 8.0 mm). If the belt is too loose, have it adjusted by your Hyundai dealer.

G150A01A-AAT

CHECKING STEERING WHEEL FREE-PLAY

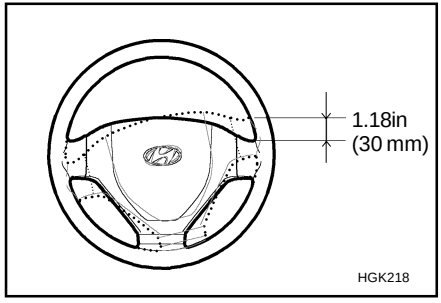

To check the steering wheel free-play, stop the car with the wheels pointed straight ahead and gently move the steering wheel back and forth. Use very light finger pressure and be sensitive to changes in resistance that mark the limits of the free-play. If the free-play is greater than specified, have it inspected by your Hyundai dealer and adjusted or repaired if necessary.

G160A01A-AAT

CHECKING CLUTCH PEDAL FREE-PLAY

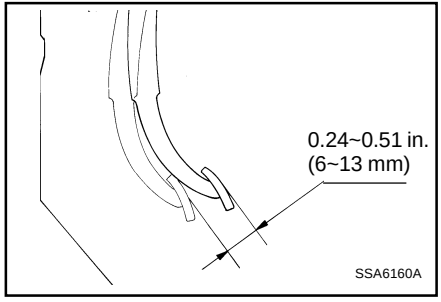

With the engine off, press lightly on the clutch pedal until you feel a change in resistance. This is the clutch pedal free-play. The free-play should be within the limits specified in the illustration. If it is not, have it inspected by your Hyundai dealer and adjusted or repaired if necessary.

G170A01A-AAT

CHECKING BRAKE PEDAL FREE-PLAY

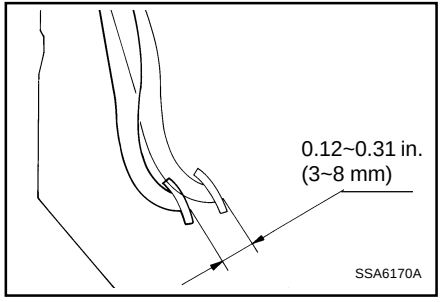

With the engine off, press down on the brake pedal several times to reduce the vacuum in the brake booster.
Then, using your hand, press down slowly on the brake pedal until you feel a change in resistance. This is the brake pedal free-play.
The free-play should be within the limits specified in the illustration. If it is not, have it inspected by your Hyundai dealer and adjusted or repaired if necessary.

G180A01A-AAT

CHECKING BRAKE PEDAL CLEARANCE

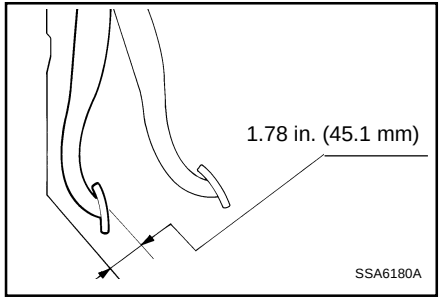

You need a helper to check the brake pedal clearance. With the engine running, have your helper press down on the brake pedal several times and then hold it down with a force of about 110 lbs (50 kg, 490 N). The brake pedal clearance is the distance from the top surface of the brake pedal to the asphalt sheeting under the floor mat.

If the brake pedal clearance is not within the limits specified in the illustration, have it inspected by your Hyundai dealer and adjusted or repaired if necessary.

G190A01A-AAT

CHECKING DRIVE BELTS

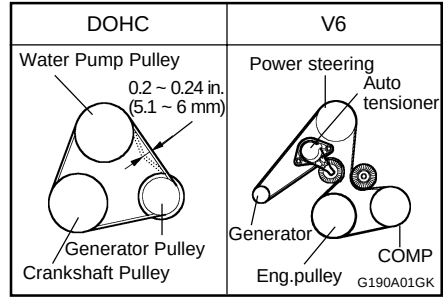

Drive belts should be checked periodically for proper tension and adjusted if necessary. At the same time, belts should be examined for cracks, wear, fraying or other evidence of deterioration and replaced if necessary.

Belt routing should also be checked to be sure there is no interference between the belts and other parts of the engine. After a belt is replaced, the new belt should be adjusted again after two or three weeks to eliminate slack resulting from initial stretching after use.

G200A01A-AAT

CHECKING AND REPLACING FUSES

Replacing a Fusible Link

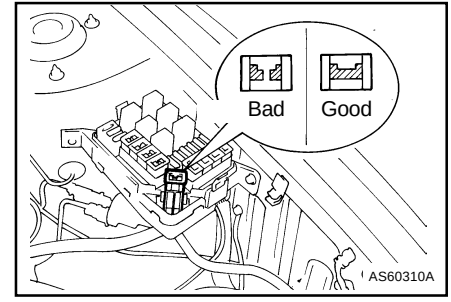

A fusible link will melt if the electrical circuits from the battery are ever overloaded, thus preventing damage to the entire wiring harness. (This could be caused by a short in the system drawing too much current.) If this ever happens, have a Hyundai dealer determine the cause, repair the system and replace the fusible link. The fusible links are located in a relay box for easy inspection.

CAUTION:

When replacing a fusible link, never use anything but a new fusible link with the same or lower amperage rating. Never use a piece of wire or a higher-rated fusible link. This could result in serious damage and create a fire hazard.

G200B02A-AAT

Replacing Accessory Fuse

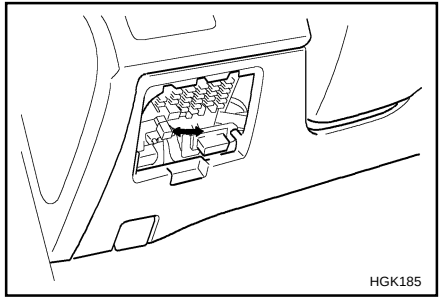

The fuse box for the lights and other electrical accessories will be found low on the dashboard on the driver's side. Inside the box you will find a list showing the circuits protected by each fuse. If any of your car's lights or other electrical accessories stop working, a blown fuse could be the reason. If the fuse has burned out, you will see that the metal strip inside the fuse has burned through. If you suspect a blown fuse, follow this procedure:

1. Turn off the ignition and all other switches.
2. Open the fuse box and examine each fuse. Remove each fuse by pulling it toward you (a small "fuse puller" tool is contained in the fuse box to simplify this operation).
3. Be sure to check all other fuses even if you find one that appears to have burned out.

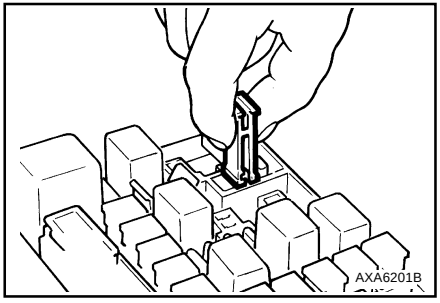

4. Replace the blown fuse by pressing a new fuse of the same rating into place. The fuse should be a snug fit. If it is not, have the fuse clip repaired or replaced by a Hyundai dealer. If you do not have a spare fuse, you may be able to borrow a fuse of the same or lower rating from an accessory you can temporarily get along without (the radio or cigarette lighter, for example). Always remember to replace the borrowed fuse.

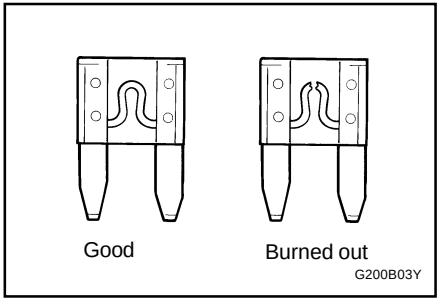

CAUTION:
A burned-out fuse indicates that there is a problem in the electrical circuit. If you replace a fuse and it blows as soon as the accessory is turned on, the problem is serious and should be referred to a Hyundai dealer for diagnosis and repair. Never replace a fuse with anything except a fuse with the same or a lower amperage rating. A higher capacity fuse could cause damage and create a fire hazard.

NOTE:
See page 6-20 for the fuse panel descriptions.

G210A01A-AAT

CHECKING THE BATTERY

WARNING:
Batteries can be dangerous! When working with batteries, carefully observe the following precautions to avoid serious injuries.

The fluid in the battery contains a strong solution of sulfuric acid, which is poisonous and highly corrosive. Be careful not to spill it on yourself or the car. If you do spill battery fluid on yourself, immediately do the following:

- o If battery fluid is on your skin, flush the affected areas with water for at least 15 minutes and then seek medical assistance.
- o If battery fluid is in your eyes, rinse out your eyes with water and get medical assistance as soon as possible. While you are being driven to get medical assistance, continue to rinse your eyes by using a sponge or soft cloth saturated with water.
- o If you swallow battery fluid, drink a large quantity of water or milk followed by milk of magnesia, eat a raw egg or drink vegetable oil. Get medical assistance as soon as possible.

While batteries are being charged (either by a battery charger or by the vehicle's generator), they produce explosive gases. Always observe these warnings to prevent injuries from occurring:

- o Charge batteries only in a well ventilated area.
- o Do not permit flames, sparks or smoking in the area.
- o Keep children away from the area.

G210B02A-AAT

Checking the Battery

Keep the battery clean. Any evidence of corrosion around the battery posts or terminals should be removed using a solution of household baking soda and warm water. After the battery terminals are dry, cover them with a light coating of grease.

PROPOSITION 65 WARNING:
Battery posts, terminals, and related accessories contain lead and lead compounds, chemicals known to the state of California to cause cancer and reproductive harm. Wash hands after handling.

G220A01A-AAT

CHECKING ELECTRIC COOLING FANS

WARNING:
The cooling fan is controlled by engine coolant temperature and may sometimes operate even when the engine is not running. Use extreme caution when working near the blades of the coolant fan, so that you are not injured by a rotating fan blade. As the engine coolant temperature decreases the fan will automatically shut off. This is a normal condition.

G220B01A-AAT

Checking Engine Cooling Fan

The engine cooling fan should come on automatically if the engine coolant temperature is high.

G220C01A-AAT

Checking Condenser Cooling Fan

The condenser coolant fan should come on automatically whenever the air conditioning is in operation.

G230A03A-AAT

POWER STEERING FLUID LEVEL

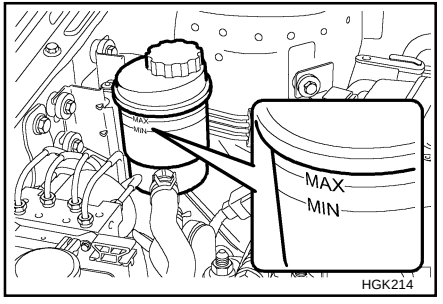

The power steering fluid level should be checked regularly. To check the power steering fluid level, be sure the engine is "OFF", then check to make certain that the power steering fluid level is between the "MAX" and "MIN" level markings on the fluid reservoir.

NOTE:
Grinding noise from the power steering pump may be heard immediately after the engine is started in extremely cold conditions (below - 4°F). If the noise stops during warm up, there is no abnormal function in the system. It is due to a power steering fluid characteristic in extremely cold conditions.

Recommended Fluid
Use PSF-3 type fluid

NOTE:
Do not start the engine when the power steering oil reservoir is empty.

G240A01A-AAT
POWER STEERING HOSES
It is suggested that you check the power steering hose connections for fluid leakage at regular intervals. The power steering hoses should be replaced if there is severe surface cracking, scuffing or worn spots. Deterioration of the hose could cause premature failure.

G250A01A-AAT
FOR MORE INFORMATION ABOUT YOUR HYUNDAI
If you desire additional information about maintaining and servicing your Hyundai, you may purchase a factory Shop Manual at your Hyundai dealer's parts department. This is the same manual used by dealership technicians and while it is highly technical it can be useful in obtaining a better understanding of your car and how it works.

G260A02A-AAT
REPLACING HEADLIGHT BULBS
Before attempting to replace a headlight bulb, be sure the switch is turned to the "OFF" position.
The next paragraph shows how to reach headlight bulbs so they may be changed. Be sure to replace the burned-out bulb with one of the same number and wattage rating.

CAUTION:
Keep the lamps out of contact with petroleum products such as oil, gasoline etc.

G270A02A-GAT
HEADLIGHT BULB
Replacement instructions:

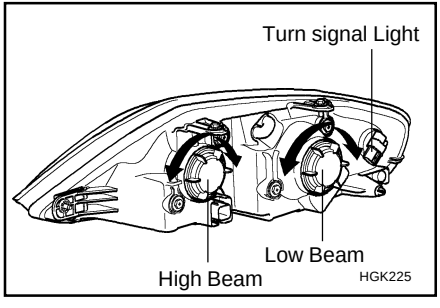

1. Allow the bulb to cool. Wear eye protection.
2. Always grasp the bulb by its plastic base, avoid touching the glass.
3. Disconnect the power cord from the bulb base in the back of the headlight.
4. Remove the dust cover.
5. Push the bulb spring for removing the headlight bulb.
6. Remove the protective cap from the replacement bulb and install the new bulb by matching the plastic base with the headlight hole. Install the dust cover after retightening the bulb spring and reconnect the power cord.
7. Use the protective cap and carton to dispose of the old bulb.
8. Check for proper headlight aim.

WARNING:
The halogen bulb contains gas under pressure and if impacted could shatter, resulting in flying fragments. Always wear eye protection when servicing the bulb. Protect the bulb against abrasions or scratches and against liquids when lighted. Turn the bulb on only when installed in a headlight. Replace the headlight if damaged or cracked. Keep the bulb out of the reach of children and dispose of the used bulb with care.

G290A02GK-AAT

HEADLIGHT AIMING ADJUSTMENT

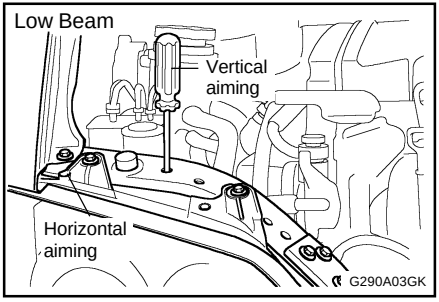

Before performing aiming adjustment, make sure of the following.

1. Keep all tires inflated to the correct pressure.
2. Place the vehicle on level ground and press the front bumper & rear bumper down several times. Place vehicle at a distance of 118 in. (3m) from the test wall.
3. See that the vehicle is unloaded (except for full levels of coolant, engine oil and fuel, and spare tire, jack, and tools).
4. Clean the head light lenses and turn on the headlights (low beam).
5. Open the hood.
6. Draw the vertical line (through the center of each headlight beam pattern) and the horizontal line (through the center of each headlight beam pattern) on the aiming screen. And then, draw the parallel line at 0.827 in. (21 mm) under the horizontal line.
7. Adjust each cut-off line of the low beam to the parallel line with a phillips screwdriver - VERTICAL AIMING.
8. Adjust each cut-off line of the low beam to the each vertical line with a phillips screwdriver - HORIZONTAL AIMING.

WARNING:
Horizontal aiming should be adjusted by an authorized Hyundai Dealer.

G290B01GK-AAT

Adjustment After Headlight Assembly Replacement

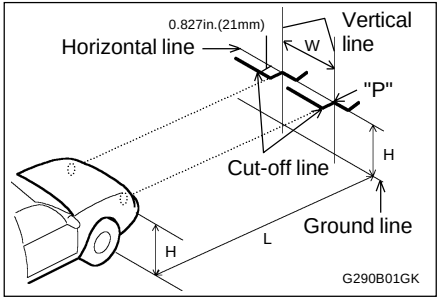

If the vehicle has had front body repair and the headlight assembly has been replaced, the headlight aiming should be checked using the aiming screen as shown in the illustration. Turn on the headlight switch.

1. Adjust headlights so that main axis of light is parallel to center line of the body and is aligned with point "P" shown in the illustration.
2. Dotted lines in the illustration show the center of headlights.

SPECIFICATION:

"H"
Horizontal center line of headlights from ground:
Low Beam: 26.7 in. (679mm)
High Beam: 26.5 in. (672mm)

"W"
Distance between each headlight center :
Low Beam: 47.3 in. (1,202mm)
High Beam: 38.0 in. (966mm)

"L"
Distance between the headlights and the wall that the lights are tested against : 118 in. (3,000 mm)

G280A02GK-AAT

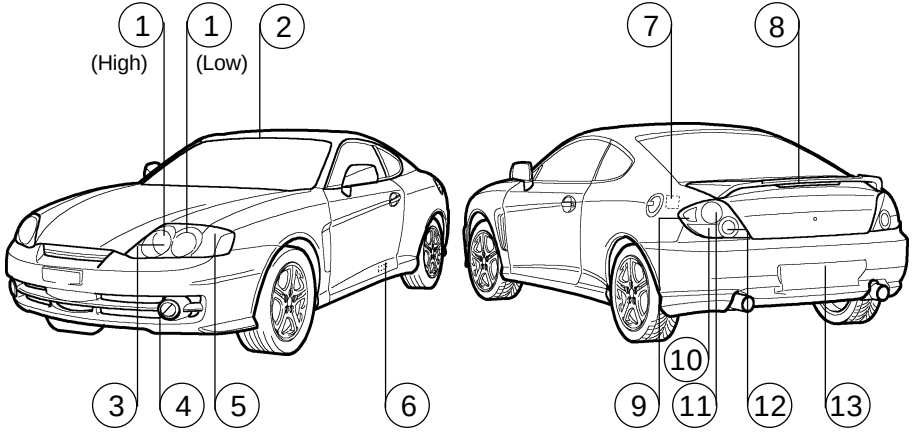

HGK035A

No.	Part Name	Wattage	No.	Part Name		Wattage
1	Head Light (High/Low)	55/55	8	High Mounted Stop Light	Without spoiler	2.4W (LED)
2	Map Light	10			With spoiler	3.5W (LED)
3	Front Position Light	5	9	Rear Combination	Side-Marker	5
4	Front Fog Light (If installed)	51	10		Turn Signal Light	27
5	Front Turn Signal Light/ Side Marker	28/8	11		Stop/Tail Light	27/8
6	Front Door Edge Warning Light	5	12		Back-up Light	27
7	Luggage Compartment Light	5	13	License Plate Light		5

G200C01GK-GAT

FUSE PANEL DESCRIPTION

Engine Compartment

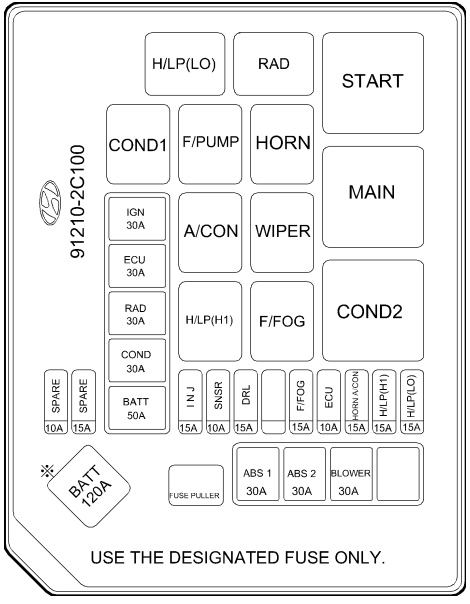

※ If installed

HGK205-E

DESCRIPTION	FUSE RATING	PROTECTED COMPONENTS
BATT	100A	Generator
BATT	50A	Generator
COND	30A	Condenser Fan
RAD	30A	Radiator Fan
ECU	30A	Engine Control, ECM. ATM Control
IGN	30A	Ignition, Start Relay
ABS 1	30A	ABS
ABS 2	30A	ABS
BLOWER	30A	Blower
INJ	15A	Injector
SNSR	10A	O_2 Sensor, ECM
DRL	15A	DRL
F/FOG	15A	Front Fog Light
ECU	10A	TCM, ECM
HORN,A/CON	15A	Horn. A/Conditioner
H/LP (H1)	15A	Head Light (High)
H/LP (LO)	15A	Head Light (LOW)

NOTE:

Not all fuse panel descriptions in this manual may be applicable to your vehicle. It is accurate at the time of printing. When you inspect the fuse box on your vehicle, refer to the fuse box label.

G200D01GK-GAT

Inner Panel

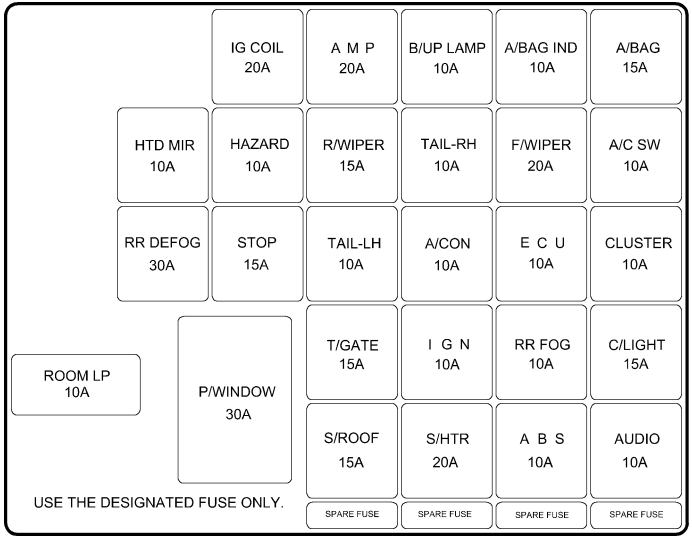

HGK204-E

DESCRIPTION	FUSERATING	PROTECTED COMPONENTS
IG COIL	20A	Ignition Coil, ECM
AMP	20A	AMP. Multi Gauge Unit
B/UP LAMP	10A	B/Up Lamp
A/BAG IND	10A	Air Bag Indicator
A/BAG	15A	Air Bag
HTD MIR	10A	Outside Mirror Defroster
HAZARD	10A	Hazard Warning Light
R/WIPER	15A	Rear Window Wiper
TAIL-RH	10A	Taillight
F/WIPER	20A	Front Window Wiper
A/C SW	10A	A/Conditioner
RR DEFOG	30A	Rear Window Defroster
STOP	15A	Stop Light
TAIL-LH	10A	Tail Light
A/CON	10A	A/Conditioner
ECU	10A	ECM, Multi Gauge Unit, TCM
CLUSTER	10A	Cluster
ROOM LP	10A	Map Light, Clock, Audio
P/WINDOW	30A	Power Window
T/GATE	15A	Tail Gate Open
IGN	10A	A/Con, A.Q.S Sensor
RR FOG	10A	Rear Fog
C/LIGHT	15A	C/Lighter, Outside Mirror
S/ROOF	15A	Sunroof
S/HTR	20A	Seat Warmer
ABS	10A	ABS. TCS
AUDIO	10A	Audio, Clock

7. EMISSION CONTROL SYSTEMS

H010A01GK-AAT

EMISSION CONTROL SYSTEM

Your Hyundai is equipped with an emission control system to meet all requirements of the U.S. Environmental Protection Agency or California Air Resources Board.
There are three emission control systems which are as follows.

1) Crankcase Emission Control System
2) Evaporative Emission Control System
3) Exhaust Emission Control System

In order to ensure the proper function of the emission control systems, it is recommended that you have your car inspected and maintained by an authorized Hyundai dealer in accordance with the maintenance schedule in this manual.

Caution for Inspection and Maintenance Test (Vehicle with Traction Control System)

- **To prevent the vehicle from misfiring during dynamometer testing, disconnect the ABS connector located inside of the wheel guard (driver side).**
- **For more information, see shop manual (BR Group, Wheel Speed Sensor).**

H010B01A-AAT

1. Crankcase Emission Control System

The Positive Crankcase Ventilation System is employed to prevent air pollution caused by blow-by gases being emitted from the crankcase. This system supplies fresh filtered air to the crankcase through the air intake hose. Inside the crankcase, the fresh air mixes with blow-by gases, which then pass through the PCV valve and into the induction system.

H010C01S-AAT

2. Evaporative Emission Control (Including ORVR: Onboard Refueling Vapor Recovery) System

The Evaporative Emission Control System is designed to prevent fuel vapors from escaping into the atmosphere.
(The ORVR system is designed to allow the vapors from the fuel tank to be loaded into a canister while refueling at the gas station, preventing the escape of fuel vapors into the atmosphere.)

Canister

Fuel vapors generated inside the fuel tank are absorbed and stored in the onboard canister. When the engine is running, the fuel vapors absorbed in the canister are drawn into the induction system through the purge control solenoid valve.

Purge Control Solenoid Valve (PCSV)

The purge control solenoid valve is controlled by the Engine Control Module (ECM); when the engine coolant temperature is low during idling, the PCSV closes so that evaporated fuel is not taken into the engine. After the engine warms-up during ordinary driving, the PCSV opens to introduce evaporated fuel to the engine.

H010D01A-AAT

3. Exhaust Emission Control System

The Exhaust Emission Control System is a highly effective system which controls exhaust emissions while maintaining good vehicle performance.

H020A01S-AAT

CATALYTIC CONVERTER

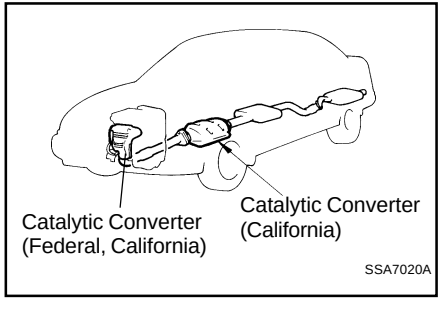

All Hyundai vehicles are equipped with one or two monolith type three-way catalytic converters to reduce the carbon monoxide, hydrocarbons and nitrogen oxides contained in the exhaust gas. Exhaust gases passing through the catalytic converter cause it to operate at a very high temperature. The introduction of large amounts of unburned gasoline into the exhaust may cause the catalytic converter to overheat and create a fire hazard. This risk may be reduced by observing the following:

WARNING:

- **Use unleaded fuel only.**
- **Maintain the engine in good operating condition. Extremely high catalytic converter temperatures can result from improper operation of the electrical, ignition or multiport electronic fuel injection.**
- **If your engine stalls, pings, knocks, or is hard to start, have your Hyundai dealer inspect and repair the problem as soon as possible.**
- **Avoid driving with a very low fuel level. Running out of gasoline may cause the engine to misfire and result in damage to the catalytic converter.**
- **Avoid idling the engine for periods longer than 10 minutes.**
- **The vehicle should not be pushed or pulled to get started. This may cause the catalytic converter to overheat and create a fire hazard.**
- **Do not touch the catalytic converter or any other part of the exhaust system while the catalytic converter is hot. Shut off the engine, wait for at least one hour before touching the catalytic converter or any other part of the exhaust system.**
- **Remember that your Hyundai dealer is your best source of assistance.**
- **Do not stop your Hyundai over any combustible material such as grass, paper, leaves or rags. These materials might contact the hot catalytic converter and a fire might result.**

8. CONSUMER INFORMATION & REPORTING SAFETY DEFECTS

I010A01A-AAT

VEHICLE IDENTIFICATION NUMBER (VIN)

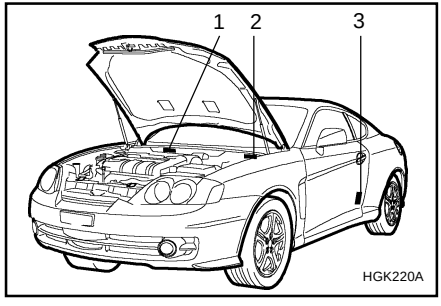

The vehicle identification number (VIN) is the number used in registering your car and in all legal matters pertaining to its ownership, etc. It can be found in three different places on your car:

1. On the bulkhead between the engine and passenger compartments.
2. On the left top side of the instrument panel where it can be seen by looking down through the windshield.
3. On the lower side of the center pillar outer panel.

I010B01A-AAT

Engine Number

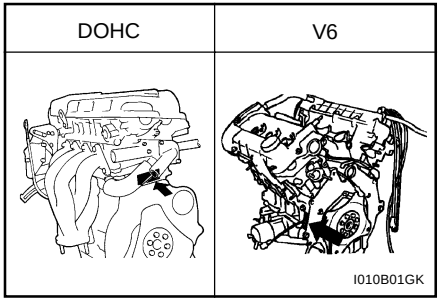

The engine number is stamped on the engine block as shown in the drawing.

I020A01A-AAT

TIRE INFORMATION

The tires supplied on your new Hyundai are chosen to provide the best performance for normal driving.

I030A01GK-AAT

RECOMMENDED INFLATION PRESSURES

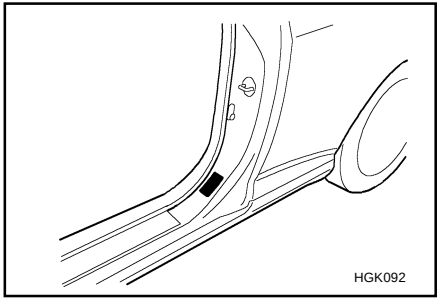

The tire label located on the driver side center pillar outer panel gives the tire pressures recommended for your vehicle.

RIM SIZE	TIRE SIZE	PRESSURE, kPa (PSI)			
		UP TO 2 PERSONS		UP TO MAX. LOAD	
		FRONT	REAR	FRONT	REAR
6.0Jx15	195/65R15	210(30)	210(30)	210(30)	210(30)
6.5Jx16	205/55R16	210(30)	210(30)	230(33)	230(33)
7.0Jx17	215/45R17	220(32)	210(30)	240(35)	230(33)
4Tx16	T125/70R16	420(60)	420(60)	420(60)	420(60)

These pressures were chosen to provide the most satisfactory combination of ride comfort, tire wear and stability under normal conditions. Tire pressures should be checked at least monthly. Proper tire inflation pressures should be maintained for these reasons:

- Lower-than-recommended tire pressures cause uneven tread wear and poor handling.
- Higher-than-recommended tire pressures increase the chance of damage from impacts and cause uneven tread wear.

CAUTION:
Always observe the following:

- **Check pressures when the tires are cold. That is, after the car has been parked for at least three hours and hasn't been driven more than one mile or 1.6 km since starting up.**
- **Check the pressure of your spare tire each time you check the pressure of other tires.**
- **Never overload your car. Be especially careful about overloading if you equip your car with a luggage rack or car top carrier.**

I040A01S-AAT

SNOW TIRES

If you equip your car with snow tires, they should be the same size and have the same load capacity as the original tires. Snow tires should be installed on all four wheels; otherwise, poor handling may result.
Snow tires should carry 4 psi (28 kPa) more air pressure than the pressure recommended for the standard tires on the tire label on the driver side center piller outer panel or up to the maximum pressure shown on the tire sidewall whichever is less.
Do not drive faster than 75 mph (120 km/h) when your car is equipped with snow tires.

I050A02GK-AAT

TIRE CHAINS

Tire chains, if necessary, should be installed on the front wheels. Be sure that the chains are the proper size and that they are installed in accordance with the manufacturer's instructions. Refer to the following information.

Tire size	Snow Chain Thickness
205/55 R 16	Max. 0.39 in. (10 mm)
215/45 R 17	Max. 0.39 in. (10 mm)

To minimize tire and chain wear, do not continue to use tire chains when they are no longer needed.

WARNING:
- **When driving on roads covered with snow or ice, drive at less than 20 mph (30 km/h).**
- **Use tire chains less than 0.39 in. (10mm) for "16, and "17 tire.**
- **Avoid sudden stop and turn.**
- **Tighten firmly to avoid contact with the vertical body, if you have noise caused by chaws contacting the body, remove the chains for damage protection.**

I060A02GK-AAT

TIRE ROTATION

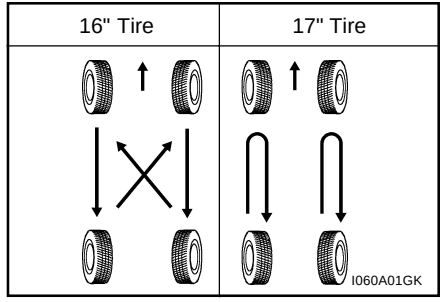

Tires should be rotated every 6,000 miles (10,000 km). If you notice that tires are wearing unevenly between rotations, have the car checked by a Hyundai dealer so the cause may be corrected.
After rotating, adjust the tire pressures and be sure to check wheel nut tightness.

WARNING:
Do not mix bias-ply and radial-ply tires under any circumstances. This may cause dangerous handling characteristics.

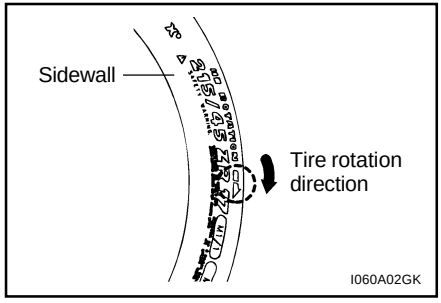

WARNING:
When rotating the 215/45 R17 tires, the tires must be mount following the "ROTATION" direction marked on the sidewall of the tires. If rotating the tires from the left side to the right side and from the right side to the left side, separate the wheel from the tire and then remount them.

I070A01A-AAT

TIRE BALANCING

A tire that is out of balance may affect handling and tire wear. The tires on your Hyundai were balanced before the car was delivered but may need balancing again during the years you own the car.

Whenever a tire is dismounted for repair, it should be rebalanced before being reinstalled on the car.

I080A01A-AAT

TIRE TRACTION

Tire traction can be reduced if you drive on worn tires, tires that are improperly inflated or on slippery road surfaces. Tires should be replaced when tread wear indicators appear. To reduce the possibility of losing control, slow down whenever there is rain, snow or ice on the road.

I090A01A-AAT

WHEN TO REPLACE TIRES

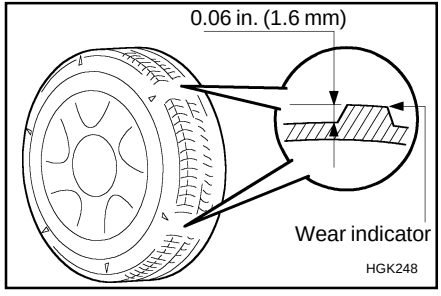

WARNING:
Driving on worn-out tires is dangerous! Worn-out tires can cause loss of braking effectiveness, steering control and traction. When replacing tires, never mix radial and bias ply tires on the same car. If you replace radial tires with bias-ply tires, they must be installed in sets of four.

The original tires on your car have tread wear indicators. The tread wear indicators appear when the tread depth is 0.06 in. (1.6 mm). The tire should be replaced when these appear as a solid bar across two or more grooves of the tread. Always replace your tires with those of the recommended size. If you change wheels, the new wheel's rim width and offset must meet Hyundai specification.

WARNING:
- **Using tires and wheels of other than the recommended sizes could cause unusual handling characteristics that could cause death, serious injury, or property damage.**
- **Wheels that do not meet Hyundai's dimensional specifications may fit poorly and result in damage to the vehicle, including broken wheel studs.**

I100A02Y-AAT

SPARE TIRE AND TOOLS

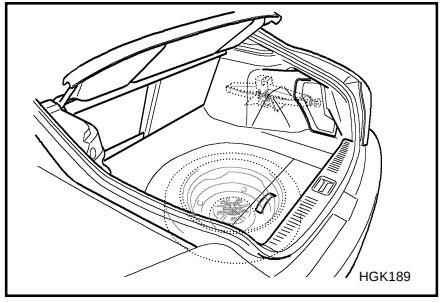

Your Hyundai is delivered with the following:

Spare tire and wheel
Wheel nut wrench, Wrench bar
Jack

I110A01A-AAT

SHOP MANUAL

A Hyundai Shop Manual is available from your authorized Hyundai dealer. It's written for professional technicians, but is simple enough for most mechanically-inclined owners to understand.

I120A02A-AAT

WARRANTIES FOR YOUR HYUNDAI VEHICLE

- o New vehicle 60 Months/60,000 Miles Limited Warranty.
- o New vehicle 120 Months/100,000 Miles Limited Powertrain Warranty (first owner only).
- o Anti-Perforation Limited Warranty
- o Emission Defect Warranty - Federal Vehicle
- o California Emission Control System Warranty (if applicable)
- o Emission Performance Warranty Federal vehicle
- o Replacement Parts and Accessories Limited Warranty

NOTE:
Detailed warranty information is provided in your Hyundai Owner's Handbook.

I130A01A-AAT

CONSUMER INFORMATION

This consumer information has been prepared in accordance with regulations issued by the National Highway Traffic Safety Administration of the U.S. Department of Transportation. It provides the purchasers and/or prospective purchasers of Hyundai automobiles with information on uniform tire quality grading. Your Hyundai dealer will help answer any questions you may have as you read this information.

I130B02A-AAT

Uniform tire quality grading

Department of Transportation quality grades - All passenger vehicle tires must conform to Federal Safety Standards in addition to these grades. These quality grades are molded on the sidewall.

Treadwear - The tread wear grade is a comparative rating based on the wear rate of the tire when tested under controlled conditions on a specified government test course. For example, a tire graded 150 would wear one and a half (1 - 1/2) times as well on the government course as a tire graded 100. The relative performance of tires depends upon the actual conditions of their use, however, and may depart significantly from the norm due to variations in driving habits, service practices and differences in road characteristics and climate.

Traction AA, A, B, C - The traction grades, from highest to lowest, are AA, A, B, and C. Those grades represent the tire's ability to stop on wet pavement as measured under controlled conditions on specified government test surfaces of asphalt and concrete. A tire marked C may have poor traction performance.

WARNING:
The traction grade assigned to this tire is based on straight-ahead braking traction tests, and does not include acceleration, cornering, hydroplaning, or peak traction characteristics.

Temperature A, B, C - The temperature grades are A (the highest), B, and C, representing the tire's resistance to the generation of heat and its ability to dissipate heat when tested under controlled conditions on a specified indoor laboratory test wheel. Sustained high temperature can cause the material of the tire to degenerate and reduce tire life, and excessive temperature can lead to sudden tire failure. The grade C corresponds to a level of performance which all passenger car tires must meet under the Federal Motor Vehicle Safety Standard No. 109. Grades B and A represent higher levels of performance on the laboratory test wheel than the minimum required by law.

WARNING:
The temperature grade for this tire is established for a tire that is properly inflated and not overloaded. Excessive speed, underinflation, or excessive loading, either separately or in combination, can cause heat buildup and possible tire failure.

I130D02A-AAT

Hyundai motor vehicles are designed and manufactured to meet or exceed all applicable safety standards.

For your safety, however, we strongly urge you to read and follow all directions in this Owner's Manual, particularly the information under the headings **"NOTE", "CAUTION" and "WARNING".**

If, after reading this manual, you have any questions regarding the operation of your vehicle, please contact your nearest Hyundai Motor America Regional Office as listed below:

Eastern Region : Connecticut, Delaware, Maine, Maryland, Massachusetts, New Hampshire, New Jersey, New York, Pennsylvanina, Rhode Island, Vermont, Virginia, West Virginia.

Eastern Region
1100 Cranbury South River Road
Jamesburg, NJ 08831
(800) 633-5151

Southern Region: Alabama, Arkansas, Florida, Georgia, Louisiana, Mississippi, North Carolina, South Carolina, Oklahoma, Tennessee, Texas.

270 Riverside Parkway, Suite A
Austell, GA 30168
(800) 633-5151

Central Region: Illinois, Indiana, Missouri, lowa, Kansas, Kentucky, Michigan, Minnesota, Nebraska, North Dakota, South Dakota, Ohio, Wisconsin.

Central Region
700 No. Enterprise Street
Aurora, Illinois 60504
(800) 633-5151

Western Region: Alaska, Hawaii, Arizona, California, Colorado, Idaho, Montana, Nevada, New Mexico, Oregon, Texas, Utah, Washington, Wyoming.

Western Region
10550 Talbert Avenue
P.O.Box 20850
Fountain Valley, California 92728-0850
(800) 633-5151

I130C02A-AAT

REPORTING SAFETY DEFECTS

If you believe that your vehicle has a defect which could cause a crash or could cause injury or death, you should immediately inform the National Highway Traffic Safety Administration (NHTSA) in addition to notifying HYUNDAI MOTOR AMERICA. If NHTSA receives similar complaints, it may open an investigation, and if it finds that a safety defect exists in a group of vehicles, it may order a recall and remedy campaign. However, NHTSA cannot become involved in individual problems between you, your dealer, or HYUNDAI MOTOR AMERICA.

To contact NHTSA, you may either call the Auto Safety Hotline toll-free at 1-888-327-4236.) or write to: NHTSA. U.S. Department of Transportation. Washington. D.C. 20590. You can also obtain other information about motor vehicle safety from the Hotline.

9. VEHICLE SPECIFICATIONS

J010A01GK-AAT

MEASUREMENT

in.(mm)

Overall length		173(4395)
Overall width		69.3(1760)
Overall height (unladen)		52.4(1330)
Wheel base		99.6(2530)
Wheel tread	Front	58.7(1490)
	Rear	58.7(1490)

J020A01GK-AAT

POWER STEERING

Type	Rack and pinion
Wheel free play	0 ~ 1.18 in.(0 ~ 30 mm)
Rack stroke	5.20 in.(132 mm)
Oil pump type	Vane type

J060A01F-AAT

FUEL SYSTEM

Fuel tank	US.gal	Liter	Imp.gal
capacity	14.5	55	12

J030A01GK-AAT

TIRE

Type	205/55 R16, 215/45 R17

J035A01GK-GAT

SPARE TIRE

Standard	T125/70R 16 (Temporary)

J040A02GK-GET

ELECTRICAL

Item	2.0L	2.7L
Battery	MF 68AH	MF 68AH
Alternator	90A	95A

J050A01GK-GAT

BRAKE

Type	Dual hydraulic with brake booster
Front brake type	Ventilated disc
Rear brake type	Solid Disc
Parking brake	Cable

J070A03GK-AAT

ENGINE

ITEMS		SPECIFICATION			
		2.0 L			2.7 L
Engine Type		4-Cyl., In-line DOHC			2.7 6 Cylinder V6 DOHC
Bore x Stroke		82 x 93.5			86.7 x 75
Displacement (cc)		1,975			2,656
Firing order		1 - 3 - 4 - 2			1 - 2 - 3 - 4 - 5 - 6
Valve clearance (Cold Engine : 20 ± 5°C)		For adjusting	In.	0.0067 ~ 0.0091 in.(0.17 ~ 0.23 mm)	AUTO LASH
			Ex.	0.0098 ~ 0.0122 in.(0.25 ~ 0.31 mm)	
		For checking	In.	0.0047 ~ 0.011 in.(0.12 ~ 0.28 mm)	
			Ex.	0.0079 ~ 0.015 in.(0.2 ~ 0.38 mm)	
Spark plug	NGK	PFR5N-11			PFR5N-11
	CHAMPION	RC10YPYP4			RC10YPB4
Spark plug gap		0.039 ~ 0.043 in. (1.0 ~ 1.1 mm)			
Idle speed (RPM)		700 ± 100			750 ± 100
Ignition timing (Base)		BTDC 8° ± 5°			BTDC 12° ± 10°

J080A03GK-AAT

LUBRICATION CHART

Item		Oil & Grease Standard		Q'ty (us.qts.) (liter)
Engine Oil (2.0 L)		API above SH, ILSAC above GF-1	-23°C above : SAE 10W-30, SAE 10W-40 38°C below : SAE 5W-30, SAE 5W-40	Engine oil : 4.07 (3.85) Oil Pan : 3.75 (3.55) (MAX) 2.75 (2.6) (MIN) Oil Filter : 0.32 (0.3)
Engine Oil (2.7 L)		API SH, SG or SG/CD	Hot Climate: SAE 20W-40, 20W-50 (ABOVE 32°F OR 0°C) Normal Climate:SAE 10W-30 10W-40, 10W-50 (ABOVE -10°F OR -23°C) Cold Climate:SAE 5W-30 5W-40 (BELOW 95°F OR 38°C)	Engine oil : 4.76 (4.5) Oil Pan : 4.44 (4.2) (MAX) 3.59 (3.4) (MIN) Oil Filter : 0.32 (0.3)
Transaxle	Manual	HYUNDAI GENUINE PARTS MTF 75W/90 (API GL-4)		2.3 (2.15)
	Auto	HYUNDAI GENUINE ATF, DIAMOND ATF SP-III or SK ATF SP-III		8.2 (7.8)
Power Steering		PSF-3		As required
Brake Fluid		DOT 3 or DOT 4 equivalent		As required
Coolant		Ethylene glycol base for aluminum radiator		2.0L : 7.4 (7.0) 2.7L : 8.5 (8.0)

ZK000A1-G

10. INDEX

A

Air Bag ..... 1-18 ~ 1-23
Air Cleaner Filter 6-8
Air Conditioning
  Care 6-12
  Operation 6-12
  Switch 1-50
Air Filter 1-58
Antenna 1-87
Anti-Lock Brake System 2-9
Ashtray 1-34
Automatic Transaxle 2-5

B

Battery 2-12, 6-16
Brake
  Anti-lock system 2-9
  Checking the brakes 6-11
  Fluid 6-11
  Pedal clearance 6-14
  Pedal free play 6-13
  Practices 2-8
Breaking-In your new Hyundai 1-2
Bulbs Wattage 6-20

C

Care of Cassette tapes 1-85
Care of Disc 1-85
Cassette Tape Player Operation (H250, H280) 1-64, 1-78
Catalytic Converter ..... 7-1 ~ 7-2
CD Auto Changer (H250, H260, H280) 1-66, 1-73, 1-82
Child Restraint System ..... 1-14 ~ 1-17
Cigarette Lighter 1-34
Clock 1-33
Clutch
  Checking fluid 6-11
  Pedal free play 6-13
Combination Light
  Auto Light 1-31
  Headlight flasher 1-31
  Headlight switch 1-30
  High-beam switch 1-31
  Lane change signal 1-30
  Turn signal operation 1-30
Compact Disc Player Operation (H260, H280) 1-71, 1-80
Consumer Information 8-4
Cooling Fans 6-16
Corrosion Protection
  Cleaning the interior 4-3
  Protecting your Hyundai from corrosion 4-1
  Washing and waxing 4-2
Cruise Control ..... 1-44 ~ 1-45

D

Defrosting/Defogging 1-51
Door
  Central door lock 1-4
  Door locks 1-2
  Front door edge warning light 1-40
  Locking, unlocking front door with a key 1-3
Drink Holder 1-34

Drive Belts 6-12, 6-14
Driving
Economical driving 2-10
Smooth cornering 2-11
Winter driving 2-11

E
Emissions Control Systems 7-1
Engine
Before starting the engine 2-2
Compartment 6-1
Coolant 6-5
Coolant temperature gauge 1-28
If the engine overheats 3-2
Number 8-1
Oil 6-3
Starting 2-3
Engine Exhaust Can Be Dangerous 2-1

F
Floor mat Anchor 1-43
Front Fog Light Switch 1-39
Front Seats
Adjustable front seats 1-6
Adjustable headrests 1-7
Adjusting seatback angle 1-7
Adjusting seat forward and rearward 1-7
Lumbar support control 1-8
Seat cushion height adjustment 1-8
Fuel
Capacity 9-1
Gauge 1-28
Recommendations 1-1
Fuel Filler Lid
Remote release 1-40
Fuses 6-14
Fuse Panel Description 6-20

G
General Everyday Checks 6-3
Glove box 1-37

H
Hazard Warning System 1-33
Headlight Aiming Adjustment 6-18
Headlight Bulb 6-17
Heating and Cooling Control
Rotary Type ..... 1-47 ~ 1-52
Automatic Type ..... 1-53 ~ 1-58
High-mounted Rear Stop light 1-39
Hood Release 1-40
Horn 1-43

I
Ignition Switch 2-2
Instrument Cluster and Indicator Lights 1-25
Instrument Panel Light Control 1-34
Instruments and Controls 1-24
Intermittent Wiper 1-32

J
Jump Starting 3-1

K
Keys 1-2
If you lose your keys 3-9
Positions 2-2
L
Luggage net 1-43

M
Maintenance Intervals
Explanation of scheduled maintenance items ..... 5-6 ~ 5-7
Maintenance under severe usage conditions 5-5
Scheduled maintenance ..... 5-3 ~ 5-4
Service requirements 5-1
Map Light 1-36
Mirror
Day-night inside rearview 1-39
Outside rear view 1-37

O
Odometer 1-29

P
Parking Brake 1-39
Power Steering Fluid Level 6-16
Pre-tensioner Seat Belt ..... 1-17 ~ 1-18

R
Radio (H250, H260, H280) 1-61, 1-68, 1-75
Rear Seats
Before folding the rear seats 1-9
Fold down 1-9
Rear seat entry 1-9
Rear seat positions 1-8
Rear Window Defroster Switch 1-33

S
Seat Belts
3-Point system 1-12
Adjustable height 1-11
Adjusting your seat belt 1-13
Care of seat belts 1-11
Precautions 1-10
Spark Plugs 6-6
Spectacle Case 1-37
Speedometer 1-29
Starting Procedures 2-3
Steering Wheel
Free play 6-13
Tilt lever 1-43
Stereo Radio Operation (H250, H260, H280) 1-61, 1-68, 1-75
Stereo Sound System 1-59
Sun Visor 1-42
Sunroof 1-35

T
Tachometer 1-29
Tail Gate 1-41
Tailgate Wiper and Washer Switch 1-32
Theft-alarm System 1-4
Tires
Balancing 8-3
Chains 8-2
Changing a flat tire 3-4
If you have a flat tire 3-4
Information 8-1
Pressure 8-1
Replacement 8-3
Rotation 8-2

Snow tires 8-2
Spare tire 3-3
Traction 8-3
Towing
A trailer (or vehicle) 2-13
Emergency 3-9
If your car must be towed 3-8
Transaxle
Automatic 2-5
Automatic transaxle fluid checking 6-10
Manual 2-4
Manual transaxle oil checking 6-9
Traction Control System 2-9
Trip Odometer 1-29

V

Vehicle Identification Number (VIN) 8-1
Vehicle Specification 9-1
Ventilation
Center ventilator 1-46
Side ventilator 1-46

W

Warning Lights ..... 1-26 ~ 1-28
Windows Glass 1-6
Windshield Wiper and Washer 1-31
Windshield Wiper Blades 6-8

미국용

SERVICE STATION INFORMATION

FUEL:

UNLEADED gasoline only
Pump Octane Rating of 87 (Research Octane Number 91) or higher.

FUEL TANK CAPACITY

Original, US.gal (Imp.gal., liter) 14.5 (12, 55)

TIRE PRESSURE:

See the label on the driver side center pillar outer panel.

OTHER TIRE INFORMATION:

See pages 8-1 through 8-4

HOOD RELEASE:

Pull handle under left side of dash.

ENGINE OIL:

SH, SG or SG/CD multigrade and fuel efficient oil. Use SAE 10W-30, 10W-40 or 10W-50 if normal temperatures are above -10°F (-23°C). For other viscosity recommendations, see page 6-3.

MANUAL TRANSAXLE:

HYUNDAI GENUINE PARTS MTF 75W/90 (API GL-4) Oil level should be up to filler-bolt hole in housing beside differential.

AUTOMATIC TRANSAXLE:

Apply the parking brake, with the engine running, shift the selector lever through all ranges and return to “N” (Neutral) position. Then check the level of fluid on the dipstick. Use only HYUNDAI GENUINE ATF available at your dealer or DIAMOND ATF SP-III, SK ATF SP-III.

QUICK INDEX

o Car will not start 3-1
o Flat tire 3-4
o Warning light/chime comes on ..... 1-26 ~ 1-28
o Engine overheats 3-2
o Towing of your vehicle 3-8
o Starting the engine 2-3
o Driving tips for first 1,200 miles (2,000 km) 1-2
o Scheduled maintenance 5-3
o Reporting safety defects 8-6

HYUNDAI MOTOR COMPANY
Seoul Korea

Printing: MAR. 03, 2003
Publication No.: A2CO-EU33H
Printed in Korea