Ofrecido por www.electromanuales.com

VAUXHALL Vectra

Operation, Safety, Maintenance

Downloaded from www.Manualslib.com manuals search engine

Ofrecido por www.electromanuales.com

Data specific to your vehicle

Please enter your vehicle's data here to keep it easily accessible.
This information is available under the section "Technical data" as well as on the identification plate.

Fuel

Designation	

Engine oil

Grade	
Viscosity	

Tyre inflation pressure

	Tyre size	with up to 4 persons		with full load	
Summer tyres		**Front**	**Rear**	**Front**	**Rear**
Winter tyres		**Front**	**Rear**	**front**	**Rear**

Weights

	Permissible Gross Vehicle Weight	
–	**EC kerb weight**	
=	**Loading**	

Downloaded from www.Manualslib.com manuals search engine

Ofrecido por www.electromanuales.com

Your Vectra

Your vehicle represents an intelligent synthesis of advanced technology, outstanding safety, environmental compatibility and economy.

It now lies with you to drive your vehicle safely and to see it performs perfectly. This Owner's Manual provides you with all the necessary information to that end.

Make sure your passengers are aware of the possible risk of accident and injury which may result from improper use of the vehicle.

You must always comply with the laws of the country in which you are travelling. These could differ from the information in this Owner's Manual.

The Owner's Manual should always be kept in the vehicle: ready to hand in the glove compartment.

Make use of the Owner's Manual:

- Its "In Brief" section will give you an initial overview.
- The table of contents at the start of the Owner's Manual and in each individual chapter will help you find your way.
- Its index will help you find what you want.
- It will familiarise you with the sophisticated technology.
- It will increase your pleasure in your vehicle.
- It will help you to handle your vehicle expertly.

The Owner's Manual is designed to be clearly laid-out and easily understood.

This symbol signifies:

► Continue reading on next page.

❇ The asterisk signifies equipment not fitted to all vehicles (model variants, engine options, models specific to one country, optional equipment, Genuine Vauxhall Parts and Accessories).

⚠Warning

⚠**Warning** is used to mark text regarding possible risks of accident or injury. Failure to follow the instructions could lead to injury or loss of life. Inform vehicle passengers accordingly.

Yellow arrows in the illustrations serve as points of reference or indicate some action to be performed.

Black arrows in the illustrations indicate a reaction or a second action to be performed.

Thank you for choosing a Vauxhall. We wish you many hours of pleasurable driving.

Your Vauxhall Team

Downloaded from www.Manualslib.com manuals search engine

Ofrecido por www.electromanuales.com

Downloaded from www.Manualslib.com manuals search engine

Ofrecido por www.electromanuales.com

Contents

Commitment to customer satisfaction:

Our aim: to keep you happy with your vehicle. All Vauxhall Authorised Repairers offer first-class service at competitive prices. Experienced, factory-trained technicians work according to factory instructions. Your Authorised Repairer can supply you with GENUINE VAUXHALL-APPROVED PARTS, which have undergone stringent quality and precision checks, and of course useful and attractive VAUXHALL-APPROVED ACCESSORIES. **Our name is your guarantee!**

For details of the Vauxhall Authorised Repairer Network, please ring this number; 0845 090 2044

In Brief 2
Instruments 34
Keys, doors, bonnet 62
Seats, Interior 81
Safety systems 106
Lighting 128
Windows, Sun Roof 136
Climate control 142
Easytronic 170
Automatic transmission 178
Driving hints 186
Saving fuel, Protecting the environment 188
Fuel consumption, fuel, refuelling 190
Catalytic converter, exhaust gases 193
Drive Control Systems 198
Brakes 210
Wheels, tyres 214
Roof Racks, Caravan and Trailer Towing 220
Self-help 229
If you have a problem 264
Maintenance, Inspection System 266
Vehicle care 278
Technical Data 282
Index 314

Downloaded from www.Manualslib.com manuals search engine

Ofrecido por www.electromanuales.com

In Brief

Key numbers, code numbers

Remove key number from keys.

The key number is specified in the vehicle documents and in the Car Pass ✻.

Alloy wheels ✻, towing equipment ✻: make a note of the key identifier codes.

Electronic immobiliser, infotainment system ✻: The code numbers are specified in the Car Pass.

Do not keep the Car Pass in the vehicle.

For key with retractable key blade ✻, press button to extend.

► Further information – see pages 62, 63, vehicle recommissioning – see page 277.

To unlock and open the doors: Press button ⊼, pull door handle

► Door locks, child safety locks – see page 77,
Electronic immobiliser – see page 63,
Keys – see page 62,
Radio remote control – see page 64,
programming unlocking mode – see page 67,
Central locking system – see page 66,
Anti-theft locking system ✻ – see page 66,
Vauxhall alarm system ✻ – see page 74.

Downloaded from www.Manualslib.com manuals search engine

Ofrecido por www.electromanuales.com

Unlock luggage compartment and open:
Press button ⊼ on the remote control,
press button and
with the estate pull button beneath the handle

► Radio remote control – see page 64,
central locking – see page 66,
programming unlocking mode – see page 67,
Vauxhall alarm system ✻ – see page 74,
electrically operated tailgate ✻ – see page 71.

To adjust front seats:
Pull handle,
slide seat,
release handle

Never adjust the seat while driving. It could move in an uncontrolled manner when the handle is pulled.

► Seat position – see page 81,
electrically adjustable front seats – see page 84.

⚠Warning

Important: Do not sit nearer than 10 inches (25 cm) from the steering wheel, to permit safe airbag deployment.

Adjust front seat backrests:
Turn handwheel

Move backrest to suit seating position.

Do not lean on seat backrest whilst adjusting it.

► Seat position – see page 81,
fold front passenger seat backrest – see page 95,
electrically adjustable front seats – see page 84.

Downloaded from www.Manualslib.com manuals search engine

Ofrecido por www.electromanuales.com

To adjust front seat lumbar support ✻ at front seats: Operate lever

Adjust lumbar support to suit personal requirements.

Do not lean on seat backrest whilst adjusting it.

► Seat position – see page 81, electrically adjustable front seats – see page 84.

To adjust front seat height ✻: Operate lever on outboard side of seat

Pump direction of the lever

Up:	Raises seat
Down:	Lowers seat

Do not adjust driver's seat whilst driving.

► Seat position – see page 81, electrically adjustable front seats – see page 84.

To adjust front seat inclination ✻: Operate front lever on outboard side of seat

Pump direction of the handle

Up:	Inclines seat
Down:	Levels seat

Do not adjust driver's seat whilst driving.

► Seat position – see page 81, electrically adjustable front seats – see page 84.

Downloaded from www.Manualslib.com manuals search engine

Ofrecido por www.electromanuales.com

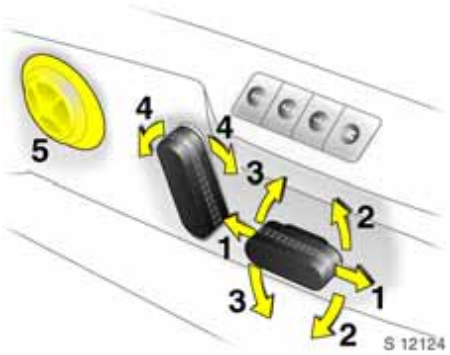

Electric seat adjustment ✻: Operate switch on outboard side of seat

1 Adjusting the longitudinal position

2 Adjusting the inclination

3 Height adjustment

4 Backrest adjustment

5 Lumbar support ✻

Do not adjust driver's seat whilst driving.

► Seat position – see page 81, electrically adjustable front seats – see page 84.

To adjust thigh support ✻ of the front sport seat ✻: Press button in recessed handle centred in the lower half of the adjustment cushion and adjust the thigh support

Adjust thigh support to suit personal requirements.

Do not adjust the thigh support whilst driving.

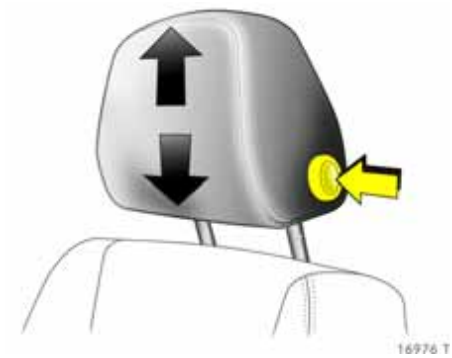

To adjust head restraint height of front and rear outboard seats ✻: Press button to release, adjust height, engage in position

► Adjusting rear centre head restraint – see page 82, head restraint position – see page 82, head restraint removal – see page 82.

Downloaded from www.Manualslib.com manuals search engine

Ofrecido por www.electromanuales.com

To adjust ✻ head restraint angle of front and rear outboard seats ✻: Swivel bottom edge of head restraint forward or rearward

► Head restraint position – see page 82, rear head restraints – see page 82.

Adjusting interior mirror: Swivel mirror housing

Swivel lever on underside of mirror housing to reduce dazzle at night.

► Automatic anti-dazzle interior mirror – see page 126.

To adjust exterior mirrors: Four-way switch in driver's door

If the outer mirror switch is pressed **1** the four-way switch operates the driver and front passenger mirrors ✻, and if the inner mirror switch is pressed **2** it only operates the front passenger mirror.

With electric seat adjustment with memory function ✻:
If the interior mirror switch **2** is pressed the exterior passenger mirror automatically points at the rear tyres as a parking aid when reverse gear is selected (not with trailer attached) ✻.

► Further information, aspherical exterior mirrors ✻ – see page 126,
automatic anti-dazzle exterior mirrors – see page 126,
heated exterior mirrors – see page 18,
electric seat adjustment ✻ – see page 85.

Downloaded from www.Manualslib.com manuals search engine

Ofrecido por www.electromanuales.com

Swing in exterior mirror:

Manually: press lightly.

Electric ✻ (both mirror switches must not be latched into position):

Push four-way switch to the right: outside rear view mirrors swivel in.

Push four-way to the left: outside rear view mirrors swivel out.

The mirrors can be retracted from the outside: Press button ═ on the remote control approx. 1 second. The mirrors will be extended the next time the vehicle is unlocked.

Swivelling only allowed at speeds of up to 4 mph (7 km/h).

To engage seat belt:
Draw seat belt smoothly from inertia reel, guide over shoulder and engage in belt buckle

The belt must not be twisted at any point. The lap belt must lie snugly against the body. The backrest must not be tilted back too far (recommended tilting angle approx. 25°).

To release belt, press red button on belt buckle.

► Seat belts – see pages 106 to 110, airbag systems ✻ – see page 112, seat position – see page 81.

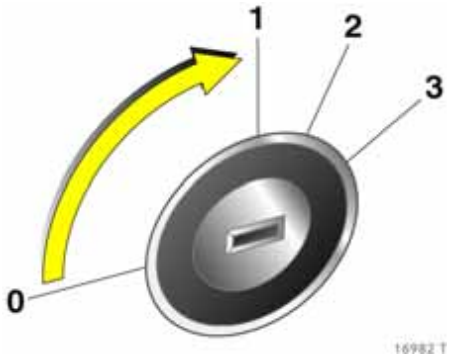

To disengage steering column lock:
To release the lock, move the steering wheel slightly, turn key to position 1

Positions:
0 = Ignition off
1 = Steering released, ignition off
2 = Ignition on,
with diesel engine: preheating
3 = Start

► Starting – see page 21, electronic immobiliser – see page 63, remove key and lock steering wheel – see page 22.

Downloaded from www.Manualslib.com manuals search engine

Ofrecido por www.electromanuales.com

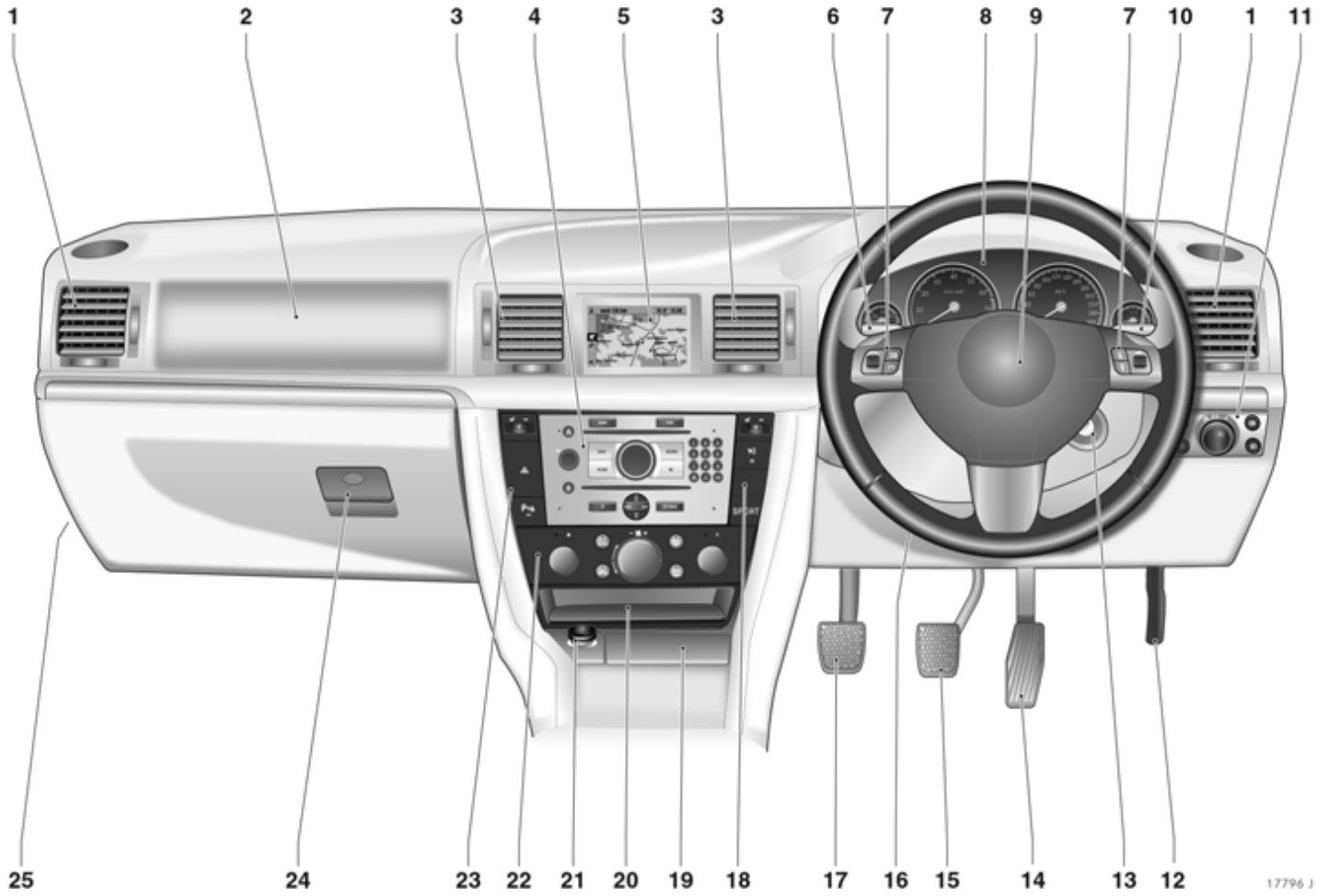

Downloaded from www.Manualslib.com manuals search engine

Ofrecido por www.electromanuales.com

		Page
1	Side air vents	144
2	Front passenger airbag	112
3	Centre air vents	144
4	Infotainment system ✻	59
5	Central information display for time, date, outside temperature, infotainment system ✻ check control ✻, trip computer ✻, climate control system ✻	42
6	Turn signal lamps	15
	Headlamp flash, Dipped and main beam	14
	Door-to-door light function ✻	132
	Parking lamps	132
	Cruise control ✻	202
7	Remote control ✻ for infotainment system	60
8	Instruments	34
9	Horn	16
10	Windscreen wiper, windscreen wash system, headlamp wash system ✻ and rear window wash system ✻	16
11	Parking lamps, dipped beam	128
	Instrument illumination	133
	Fog tail lamp	130
	Fog lamps ✻	130
	Headlamp range adjustment ✻	129
12	Bonnet release lever	80
13	Ignition lock with steering wheel lock	7
14	Accelerator pedal	186
15	Brake pedal	187, 210
16	Steering wheel adjustment	14
17	Clutch pedal ✻	187
18	Right heated seat ✻ and Seat climate control ✻	145
	Vauxhall alarm system ✻	74
	Rear window blind ✻	141
	and Electronic Stability Program ✻	198
	SPORT mode ✻	200
19	Ashtrays	102
20	Stowage compartment ✻ with AUX input ✻	60
21	Cigarette lighter ✻ or socket	101
22	Climate control	165
23	Heated seat (left) ✻ and seat climate control	145
	Hazard warning lamps	16
	Parking distance sensor ✻	204
24	Glove compartment	103, 134
25	Fuse box	246

Downloaded from www.Manualslib.com manuals search engine

Ofrecido por www.electromanuales.com

Control indicators

Turn signal lights,
see pages 15, 34.

Engine oil pressure,
see page 34.

Brake system,
Clutch system,
see pages 35, 212, 272.

Alternator,
see page 35.

Airbag systems,
Belt tensioners,
see pages 108, 117.

Coolant temperature,
see pages 35, 41.

Exterior lights,
see pages 35, 128.

Sport programme
of automatic transmission ✻
or Easytronic ✻,
see pages 173, 182.

Winter programme of
automatic transmission ✻
or Easytronic ✻,
see pages 174, 182.

Door open ✻,
see page 36.

Easytronic ✻,
Start engine ✻,
see page 171.

Bulb replacement ✻,
see pages 36, 252.

Open luggage compartment,
see pages 36, 70.

Fog lights ✻,
see pages 36, 130.

Main beam,
see pages 14, 36.

Fog tail light,
see pages 36, 130.

Parking distance sensor ✻,
Fault,
see page 204.

Continuous
Damping Control ✻,
Fault,
see page 200.

Seat belt ✻,
see page 36.

Engine electronics,
Immobiliser,
Transmission electronics ✻,
Diesel fuel filter ✻,
Fault,
see pages 37, 63, 196.

Preheating system ✻,
Diesel particle filter ✻,
see page 37.

Coolant fluid level,
see pages 37, 271.

Anti-lock brake system,
see page 213.

Downloaded from www.Manualslib.com manuals search engine

Ofrecido por www.electromanuales.com

Electro-hydraulic power assisted steering,
Fault,
see page 37.

Electronic Stability Programme (ESP®Plus) ✻,
see page 198.

Seat occupancy recognition ✻,
see page 118.

Engine oil level,
see pages 38, 268.

Cruise control ✻,
see page 202.

Fuel level,
see pages 38, 41, 229.

Exhaust emission ✻,
see pages 38, 195.

Tyre pressure monitoring system ✻,
see pages 38, 206.

Adaptive driving light (Adaptive Forward Lighting = AFL) ✻,
Fault,
see pages 38, 131.

Lighting

Light switch,
Stalk positions,
see pages 14, 128,

0 **Lights off,**

Parking lights,

Dipped beam, main beam.

AUTO **Automatic dipped beam activation ✻,**
see page 129.

Fog lights ✻,
see pages 36, 130.

Fog tail light,
see pages 36, 130.

Main beam,
see page 14.

Turn signal lights,
see page 15.

Instrument illumination,
see page 133.

Headlight range adjustment ✻,
see page 129.

Interior lighting,
see page 133.

Reading lights, front ✻,
see page 133.

Hazard warning lights,
see page 16.

Downloaded from www.Manualslib.com manuals search engine

Ofrecido por www.electromanuales.com

Climate control

Air flow,
see pages 147, 163.

Air distribution,
see pages 147, 162,

to head area via adjustable air vents and to foot well,

to head area via adjustable air vents front and rear ✻,

to the windscreen and the front door windows,

to the windscreen, to the front door windows and to the footwell,

to foot well.

Demisting and defrosting ✻,
see pages 152, 157, 161.

Heated rear window,
see page 145.

Air conditioning system ✻,
see page 150.

Air recirculation system ✻,
see page 150.

A **Automatic control of fan speed ✻,**
see page 159.

AUTO **Automatic mode ✻, Climate control system,**
see page 159.

Heated seats ✻,
see page 145.

Driver's seat with climate control ✻,
see page 146.

Remote control of auxiliary heating/ ventilation ✻,
see page 165.

Sun roof ✻

Sun roof,
opening – see page 139.

Sun roof,
closing – see page 139.

Sun roof,
comfort setting – see page 139.

Sun roof,
raising – see page 139.

Windscreen wiper

Stalk positions,
see page 16,

O **Off,**

– – **Timed interval wipe, or automatic wipe with rain sensor ✻,**

— **Slow,**

═ **Fast .**

Downloaded from www.Manualslib.com manuals search engine

Ofrecido por www.electromanuales.com

Information display, Infotainment system ✻

Information display,
see page 42.

On button for date and time and time, see page 44.

Date and time setting button, See page 44.

Remote control ✻ for infotainment system,
see page 60.

Cruise control ✻

Buttons on turn signal stalk,
see page 202.

Activate, store, accelerate,

Resume stored speed, decelerate,

Deactivate.

Miscellaneous

Central locking system,
locking – see page 66.

Central locking system,
unlocking – see page 66.

Boot lid/tailgate,
unlocking – see page 70.

Luggage compartment,
unlocking – see page 70.

Electrically operated tailgate ✻,
opening – see page 71.

Central locking switch, unlocking,
see page 67.

Central locking switch, locking,
see page 67.

Vauxhall alarm system ✻,
see page 74.

Child safety switch ✻,
see page 137.

Rear window blind ✻,
see page 141.

Parking distance sensor ✻,
see page 204.

SPORT **SPORT mode ✻,**
see page 200.

Horn,
see page 16.

Automatic transmission ✻, Easytronic ✻, Winter programme,
see pages 174, 182.

Automatic transmission ✻, Selector lever lock,
see page 179.

First-aid kit (cushion) ✻,
see page 234.

Warning triangle ✻:,
see page 234.

Downloaded from www.Manualslib.com manuals search engine

Ofrecido por www.electromanuales.com

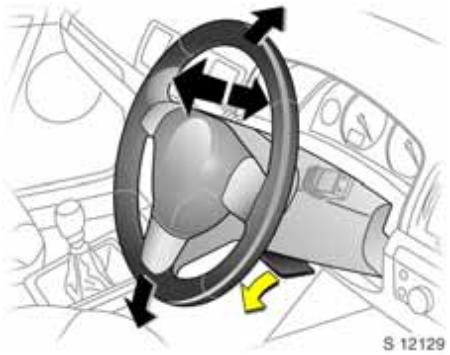

Steering wheel adjustment ✻:
Move lever down,
adjust height and distance,
move lever up,
engage

Adjust steering wheel only when vehicle is stationary and steering column lock is released.

► Airbag systems ✻ – see page 112.

Light switch:

0	**=**	**Off**
	=	**Parking lights**
	=	**Dipped or main beam**
AUTO	**=**	**Automatic dipped beam activation ✻**

Press = Fog lights ✻

Press = Fog tail light

► Further information – see page 128, headlight warning device – see page 22.

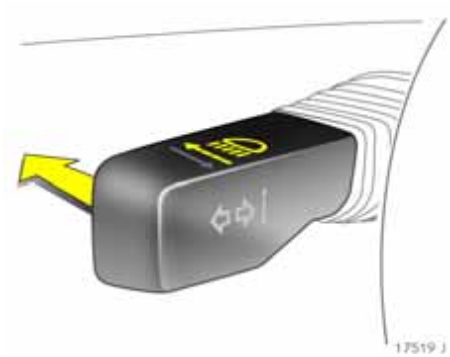

Switch between dipped and main beam:

Main beam	**=**	**Push stalk forward**
Dipped beam	**=**	**Push stalk forward again or pull toward steering wheel**

The blue control indicator is illuminated when main beam is on.

Downloaded from www.Manualslib.com manuals search engine

Ofrecido por www.electromanuales.com

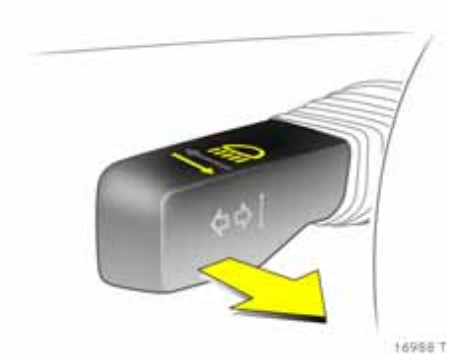

Headlight flash:
Pull stalk towards steering wheel

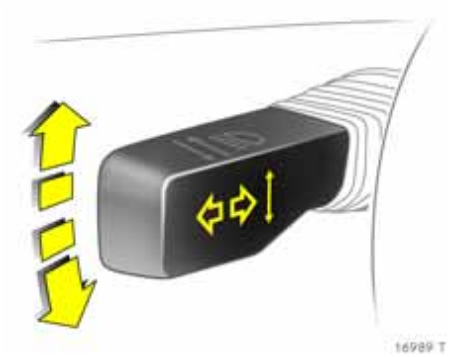

Turn signals:
Right = Move stalk up
Left = Move stalk down

After operation, the turn signal stalk returns to its starting position.

If the stalk is moved past the resistance point, the turn signal light remains on. When the steering wheel moves back toward the straight-ahead position, the turn signal light is automatically deactivated.

Tap signal: Move stalk to resistance point and release to activate three flashes from the turn signals when changing lanes or the like.

If the stalk is moved past the resistance point the turn signal remains on.

Switch the turn signal off manually by moving the stalk slightly.

To operate cruise control ✻:
Press buttons on stalk

Switch on: briefly press button ⏲.

Switch off: briefly press button O.

Resume at stored speed: briefly press button ⏲.

► Cruise control ✻ – see page 202.

Downloaded from www.Manualslib.com manuals search engine

Ofrecido por www.electromanuales.com

Hazard warning lights:
On = Press ⚠
Off = Press ⚠ again

To aid location of the pushbutton, the red surface is illuminated when the ignition switched on. When the button is pressed, its control indicator flashes in time with the hazard warning lights.

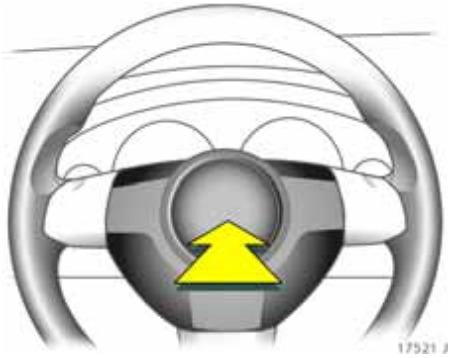

To operate horn:
Press in middle of steering wheel

► Airbag systems ✻ – see page 112,
Remote control for
Infotainment system ✻ – see page 60.

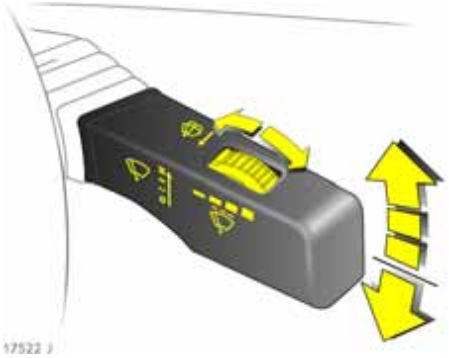

Windscreen wiper:
Gently tap stalk upward
O = Off
– – = Adjustable timed interval wipe
— = Slow
═ = Fast

Stalk always moves back to starting position. Shift to next higher or lower level: move stalk slightly.

Push stalk past resistance point and hold: the windscreen wiper stages are run through; an acoustic signal sounds at position O.

Adjustable interval wipe – –:
Shorter intervals = turn adjuster wheel to right
Longer intervals = turn adjuster wheel to left

Press the stalk down from position O: Single swipe.

► Further information – see pages 273, 274, 279.

Downloaded from www.Manualslib.com manuals search engine

Ofrecido por www.electromanuales.com

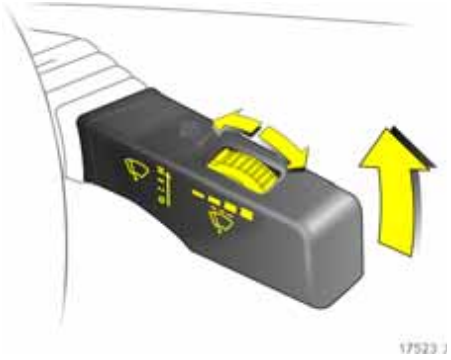

Automatic wiping with rain sensor ✻:
Move stalk upward
– – = automatic wiping with rain sensor

Automatic wiping – –: the rain sensor detects the quantity of water on the windscreen and automatically controls the windscreen wiper. The sensitivity of the system can be adjusted using the adjuster wheel:

Automatic wiping – –:
Less sensitive = to the left
More sensitive = to the right

To switch off, move stalk downwards.

► Further information – see pages 273, 274, 279.

Operating windscreen and headlight wash systems ✻:
Pull stalk towards steering wheel

The wiper is switched on for several wipe operations. A single after-wipe occurs at speeds of up to 80 mph (130 km/h).

The headlight wash system ✻ is ready for operation when the headlights are switched on. Wash fluid is sprayed onto the headlights once. Then the headlight wash system is disabled for 2 minutes.

On vehicles fitted with rain sensor ✻, keep the sensor area clean.

► Further information – see pages 274, 279.

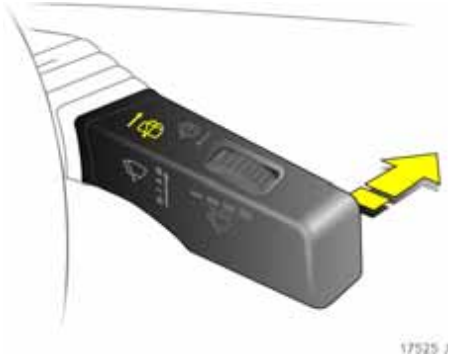

Rear window wiper ✻ and wash system ✻ operation:
Wiper on = Push stalk forward
Wiper off = Push stalk forward again
Wash = Press and hold

The rear window wiper operates in intermittent mode. Rear window wiping takes place automatically with the windscreen wiper switched on and reverse gear selected.

When washing, the wiper swipes for a few strokes. At low speeds, there is a one-time post-wash swipe.

The rear window wash system is deactivated when the fluid level is low.

► Further information – see pages 273, 274, 279.

Downloaded from www.Manualslib.com manuals search engine

Ofrecido por www.electromanuales.com

Heated rear window, heated exterior mirrors:
On = Press
Off = Press again

Heating operational only with engine running.

The rear window and exterior mirror heating is switched off automatically after approx. 15 minutes.

► Further information – see page 145.

To demist or defrost windows: Set air distribution to , rotary switch for temperature and air flow clockwise; Air conditioning system ✻: Press buttons and , climate control system ✻: Press buttons and , turn rotary switch for temperature clockwise, air flow to A; Climate control system ✻: Press button

Open front air vents, direct side air vents towards the door windows. Close centre air vents ✻.

► Climate control – see page 142.

Setting automatic mode of climate control system ✻: Press AUTO button, set temperature for driver and passenger sides using left and right rotary knobs

All front air vents open. If desired, the rear vents also ✻.

► Climate control system ✻ – see page 158.

Downloaded from www.Manualslib.com manuals search engine

Ofrecido por www.electromanuales.com

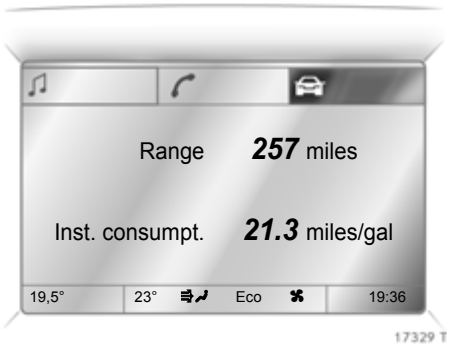

Information display: Display the information

- Time,
- outside temperature,
- radio ✻ and date,
- navigation ✻,
- telephone ✻,
- check control ✻,
- trip computer ✻,
- climate control system ✻.

► Info Display – see page 42.

Manual transmission:

Reverse gear: with vehicle stationary, three seconds after de-clutching, pull the ring up and engage gear.

If the gear does not engage, set the lever in neutral, release the clutch pedal and depress again; then repeat gear selection.

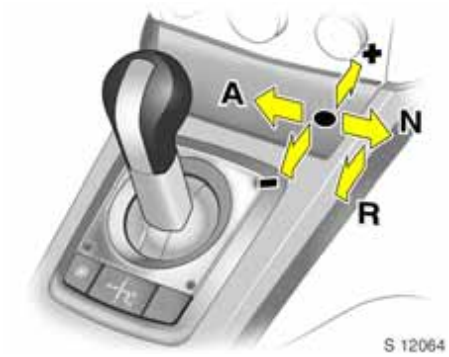

Easytronic ✻:

N = Idle
● = Drive position
+ = Higher gear
- = Lower gear
A = Change between Automatic and Manual mode
R = Reverse (with selector lever lock)

The selector lever must always be moved in the appropriate direction as far as it will go. Upon release, it automatically returns to the centre position. Pay heed to the gear/mode indicator in the transmission display.

The foot brake must be depressed when starting.

► Easytronic ✻ – see page 170.

Downloaded from www.Manualslib.com manuals search engine

Ofrecido por www.electromanuales.com

Automatic transmission ✻:
P = Park position
R = Reverse gear
N = Neutral position (idling)
D = Automatic gear selection
Selector lever in D to the left:
Manual mode
+ = Higher gear or stage
- = Lower gear or stage

P or **N** must be engaged when starting.

In order to leave **P** switch on ignition, operate foot brake and press button on selector lever.

To engage **P** or **R**, push button on selector lever.

P: Only with vehicle stationary, first apply hand brake
R: Only with vehicle stationary

► Automatic transmission ✻ – see page 178.

Exhaust gases are poisonous

Exhaust gases contain carbon monoxide, which is extremely poisonous but is odourless and colourless.

Therefore never inhale exhaust gases, and never run the engine in an enclosed space.

Avoid driving with an open luggage compartment. Otherwise, exhaust gases could penetrate the interior.

Downloaded from www.Manualslib.com manuals search engine

Ofrecido por www.electromanuales.com

Before starting off, check:

- Tyre pressure and condition – see pages 206, 215, 299.
- Engine oil level and fluid levels in engine compartment – see pages 267 to 275.
- All windows, mirrors, exterior lighting and number plates are free from dirt, snow and ice and operational.
- Do not place any objects in front of the rear window, on the instrument panel or in the area in which the airbags inflate.
- Seats, seat belts and mirrors are correctly adjusted.
- Check brakes.

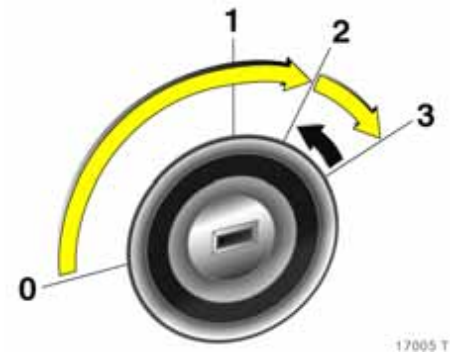

To start engine:
Operate clutch and brake, automatic transmission ✻ in P or N,
Easytronic ✻: Depress brake, do not accelerate;
Petrol engine: Turn key to 3;
Diesel engine: Turn key to 2, when control indicator ϖ goes out[1], turn key to 3;
Release key once engine is running

To restart or switch off the engine, turn key back to **0**.

To switch on the ignition, only turn the key to 2.

[1] Preheating system switches on only if outside temperature is low.

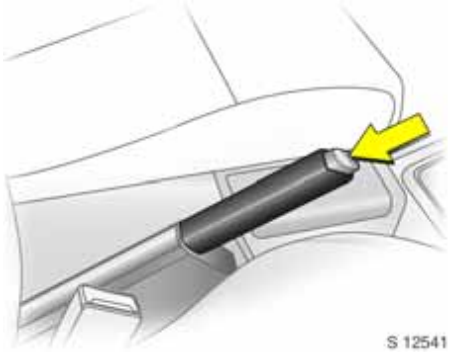

Releasing the hand brake:
Raise lever slightly, press lock button, lower lever fully

To reduce operating forces, depress foot brake at the same time.

And now "Have a good journey!"

Drive carefully, economically and with the environment in mind. While driving, do not do anything that could distract you.

Downloaded from www.Manualslib.com manuals search engine

Ofrecido por www.electromanuales.com

Warning buzzers

When starting the engine or whilst driving:

- if seat belt is not fastened ✻,
- if a door or the tailgate is ajar,
- once you have reached a certain speed if the hand brake is applied ✻,
- if a specified maximum speed is exceeded ✻,
- for Easytronic ✻ - if **A**, **M** or **R** is selected while the engine is running and the driver's door is opened but the foot brake is not depressed.

When the vehicle is parked and the driver's door is opened:

- When the key is in the starter switch ✻,
- with parking lights or dipped beam switched on
- with Easytronic ✻ – if the hand brake is not applied and no gear is engaged when the engine is off

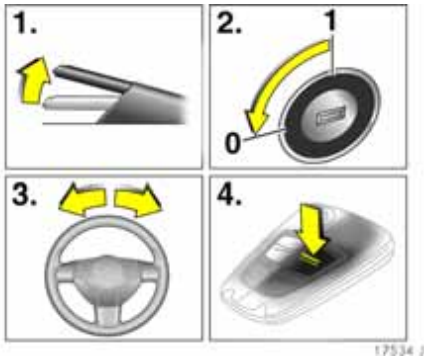

Parking the vehicle: Apply handbrake firmly, engine off, remove key, lock steering wheel, lock vehicle

To lock and activate Vauxhall alarm system ✻ press button ⚌. To activate the anti-theft locking system ✻ press button ⚌ again.

▶ Further information – see pages 63, 186, radio remote control – see page 64, central locking system – see page 66, Vauxhall alarm system ✻ – see page 74, vehicle decommissioning – see page 277.

Downloaded from www.Manualslib.com manuals search engine

Ofrecido por www.electromanuales.com

Advice when parking:

- Do not park vehicle on easily ignitable surfaces, since the hot exhaust system temperatures could cause the surface to ignite.
- Closing windows and sun roof ✻.
- Always apply the hand brake fully, raising the armrest ✻ when doing so. When parking on an incline, pull the hand brake as far as it will go. To reduce operating forces, depress the foot brake at the same time.
- Before switching off ignition: with manual transmission, engage first or reverse gear; with automatic transmission ✻, selector lever in **P;** with Easytronic ✻ engage first or reverse gear (note gear indicator – see page 171).
- On vehicles with Easytronic ✻ control indicator (!) flashes for a few seconds after the ignition is switched off if the hand brake has not been applied – see page 175.
- In vehicles with automatic transmission ✻ the key can only be removed when the selector lever is in position **P**.
- Remove ignition key.
- Turn steering wheel until lock is felt to engage (anti-theft protection).
- The engine cooling fans may run after the engine has been switched off – see page 267.

► Further information – see pages 276, 277.

Downloaded from www.Manualslib.com manuals search engine

Ofrecido por www.electromanuales.com

Service work, Maintenance

We recommend that you entrust all work to your Vauxhall Authorised Repairer, who can provide you with reliable service and correctly perform all work according to factory instructions.

► Vauxhall Service – see page 264, service interval display – see pages 39, 266.

Genuine Vauxhall Parts and Accessories

We recommend that you use "Genuine Vauxhall Parts and Accessories" and conversion parts approved expressly for your vehicle type. These parts have undergone special tests to establish their reliability, safety and specific suitability for Vauxhall vehicles. Despite continuous market monitoring, we cannot assess or guarantee these – attributes for other products, even if they have been granted approval by the relevant authorities – or in some other form.

"Genuine Vauxhall Parts and Accessories" and conversion parts approved by Vauxhall can be obtained from your Vauxhall Authorised Repairer, who can – also provide expert advice on permitted technical changes – and ensure correct installation.

⚠Warning

Carry out regularly the checks recommended in the individual sections of this Owner's Manual.

Ensure that your vehicle is serviced at the service intervals specified in the Service Booklet. We recommend that you entrust this work to your Vauxhall Authorised Repairer.

Have faults remedied without delay! Consult a workshop. We recommend your Vauxhall Authorised Repairer. If necessary, interrupt your journey.

► Maintenance – see page 266.

Downloaded from www.Manualslib.com manuals search engine

Ofrecido por www.electromanuales.com

That was the most important information for your first drive in your Vectra in brief.

The other pages of this chapter contain a summary of the interesting functions in your vehicle.

The remaining chapters of the Owner's Manual contain important information on operation, safety and maintenance as well as a complete index.

Downloaded from www.Manualslib.com manuals search engine

Ofrecido por www.electromanuales.com

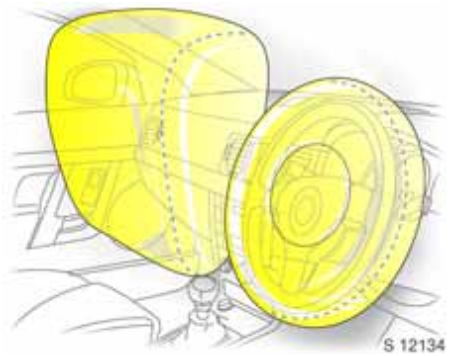

Vauxhall Full Size airbag system

The Vauxhall Full Size airbag system comprises several individual systems.

Front airbag system

The front airbag system will be triggered in the event of a serious accident involving a frontal impact and forms safety cushions for the driver and front passenger. The forward movement of the driver and front passenger is checked and the risk of injuries to the upper body and head thereby substantially reduced.

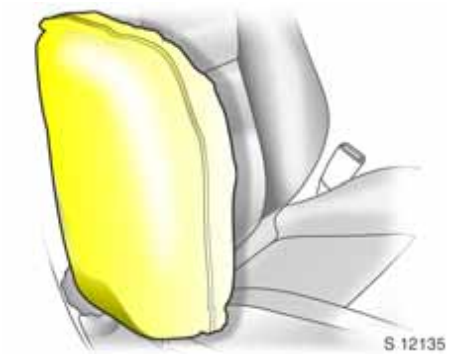

Side airbag system ✻

The side airbag system triggers when a side-on collision occurs and provides a safety barrier for the driver and/or passenger in the respective front door area. This reduces the risk of injury to the upper body considerably in case of a side impact.

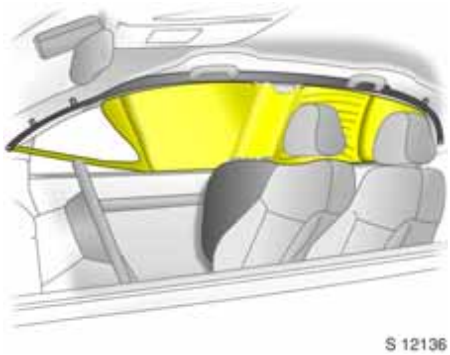

Curtain airbag system ✻

The curtain airbag system triggers in case of a side-on collision and provides a safety barrier in the head area on the respective side of the vehicle. This reduces the risk of injury to the head considerably in case of a side-on collision.

► Airbag systems ✻ – see page 112.

Downloaded from www.Manualslib.com manuals search engine

Ofrecido por www.electromanuales.com

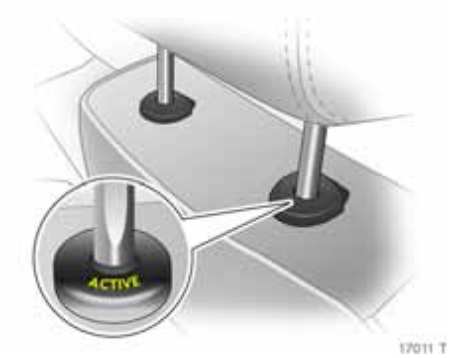

Active head restraints ✻ at front seats

In the event of a rear-end impact, the active head restraints automatically tilt forwards. The head is more effectively supported by the head restraint and the risk of injuries caused by whiplash in the neck area is reduced.

Active head restraints are identified by the lettering **ACTIVE** on the head restraint guide sleeves.

Operating menus in the information display ✻

Menu options are selected using menus and using the buttons/four-way button or the multifunction button of the Infotainment system ✻ or the left-hand adjuster wheel ✻ on the steering wheel. The respective menu options are shown on the display.

Selection using four-way button: press four-way button at top, bottom, left or right.

Selection using multifunction button: rotate and press multifunction button.

To exit a menu, turn the multifunction button left or right to **Return** or **Main** and select.

► Info Display – see page 42.

Downloaded from www.Manualslib.com manuals search engine

Ofrecido por www.electromanuales.com

Selection using left-hand adjuster wheel on steering wheel: rotate and press adjuster wheel.

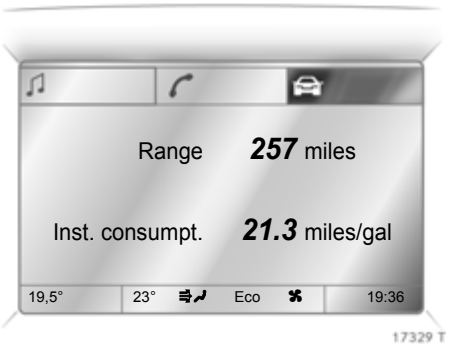

Trip computer ✻

The trip computers provide information on driving data, which is continually recorded and evaluated electronically.

Functions:

- Range
- Instantaneous consumption
- Distance travelled
- Average speed
- Effective consumption
- Average consumption
- Stop watch
- Tyre pressure ✻

► Trip computer – see pages 48, 54.

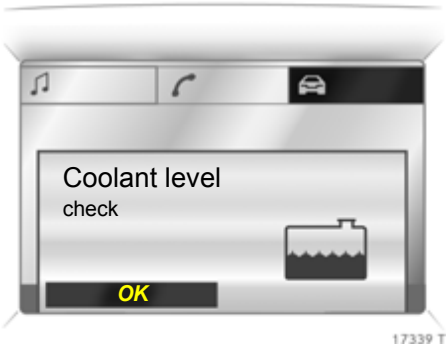

Check control ✻

The check control software monitors

- Fluid levels
- Tyre pressure ✻
- Radio remote control battery
- Vauxhall alarm system ✻
- Important exterior lighting lights, including cables and fuses

► Check control – see page 58.

Downloaded from www.Manualslib.com manuals search engine

Ofrecido por www.electromanuales.com

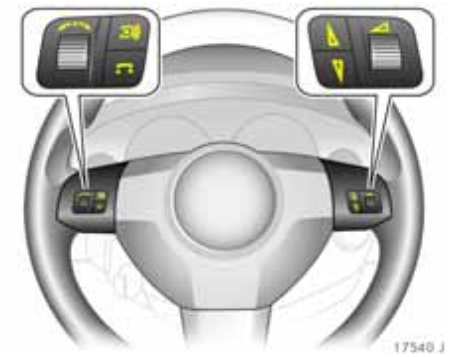

Remote control for Infotainment system ✻

The functions of the Infotainment system ✻ and the information display can be operated using the buttons on the steering wheel.

Further information is available in the infotainment system operating instructions.

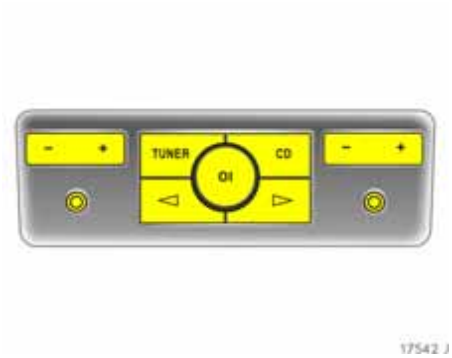

Twin Audio ✻

Twin Audio allows rear seat occupants the choice between the audio source played on the infotainment system or a separate audio source.

Only an audio source that is not currently active on the infotainment system can be controlled using Twin Audio.

Two headphone connections are available, with separate volume controls.

Further information is available in the infotainment system operating instructions.

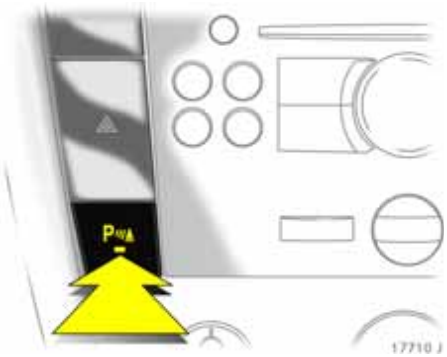

Parking distance sensor ✻

When reverse gear is selected, the parking distance sensor switches itself on automatically.

The parking distance sensor can also be activated at speeds of less than 15 mph (25 km/h) by pressing the P button on the instrument panel.

If the vehicle approaches an obstacle to the front or rear, an series of signals is sounded in the vehicle interior. The interval between the signals becomes shorter as the distance is reduced. If the distance is less than 30 cm, the signal will be continuous.

► Further information – see page 204.

Downloaded from www.Manualslib.com manuals search engine

Ofrecido por www.electromanuales.com

17560 J

Travel Assistant ✻

The Travel Assistant Contains

- Armrest
- Stowage compartments
- Waste container
- Drink holders
- Accessory sockets
- Connection console e.g. for DVD player ✻
- Electric cool box
- Tables
- Twin Audio (rear audio module) ✻ or stowage compartment

The Travel Assistant is installed on a console above the middle seat in the rear.

► Further information – see page 87.

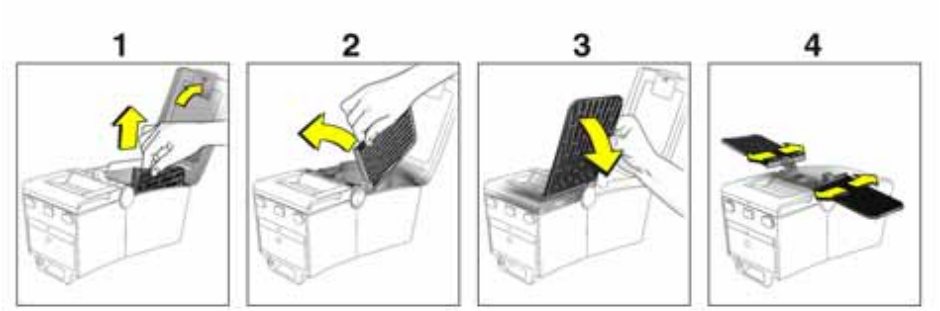

17573 J

Tables

1 Fold armrest up and and use recessed grip to pull table upwards as far as it will go.

2 Swivel table forward.

3 Fold table down.

4 Fold armrest down and set the table to the desired position by sliding it forward or rearward.

Downloaded from www.Manualslib.com manuals search engine

Ofrecido por www.electromanuales.com

FlexOrganizer ✻

The side walls contain retaining strips, where various components can be attached to divide the luggage compartment or fasten loads.

The system consists of
- variable partition net
- variable partition wall
- partition rod
- mesh pockets for the side walls
- hooks

► Further information – see page 98.

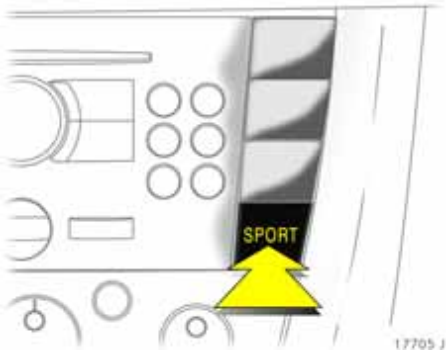

SPORT mode ✻

To activate

Press the **SPORT** button. The LED in the button illuminates.

SPORT mode is used to change damping ✻, steering ✻, throttle application and the shifting times and shifting points for Easytronic ✻ and automatic transmission ✻ while driving.

Damping and steering become more direct and provide better contact with the road surface. The engine reacts more quickly to accelerator movements.

With Easytronic ✻ and automatic transmission ✻, the shift times are shortened and shifting takes place at higher revs (not with cruise control enabled ✻).

► Further information – see page 200.

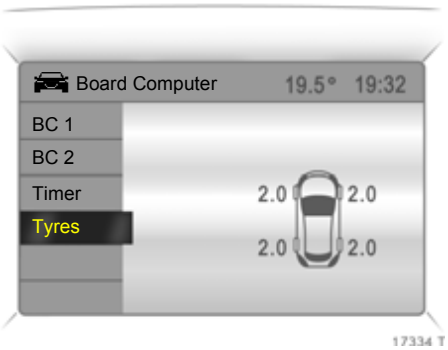

Tyre pressure monitoring system ✻

The tyre pressure monitoring system continuously monitors the pressure of all four tyres while the vehicle is being driven.

A pressure sensor is installed in each wheel. The inflation pressures of the individual tyres are transmitted to a controller, where they are compared.

The current tyre pressures can be displayed on the graphical information display or the colour information display ✻.

Deviating tyre pressures are displayed in the form of messages on the information display whilst driving.

► Further information – see page 206.

Downloaded from www.Manualslib.com manuals search engine

Ofrecido por www.electromanuales.com

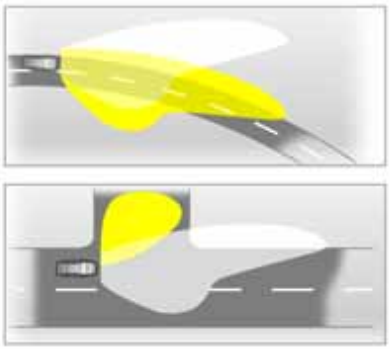

Adaptive Forward Lighting (AFL) ✻

On vehicles with Bi-Xenon headlights, improves illumination of

- curves (curve lighting)
- intersections and tight turns (turn lighting)

Curve lighting 1
The Xenon light beam pivots based on steering wheel position and speed (from approx. 6 mph / 10 km/h).

The headlights shine at an angle of up to 15° to the right or left of the direction of travel.

Turn lighting 2
An additional light comes on at certain steering wheel settings (after approx. 90°), turn signal settings and speeds (up to approx. 25 mph / 40 km/h).

The light beam projects at a 90° angle to the left or right of the vehicle up to a distance of approx. 30 metres.

Motorway lighting
At higher speeds and continuous straight ahead travel, the dipped beam automatically raises slightly, thereby increasing headlight range.

► Further information – see page 131.

Downloaded from www.Manualslib.com manuals search engine

Ofrecido por www.electromanuales.com

Electrically operated tailgate ✻

■ To open

– Press button on the remote control for approx.
1 second

or

– with the key in the ignition switch and the hand brake applied, press in the driver's door approx.
1 second

or

– unlock the tailgate and open by pulling the button under the handle.

■ To close

– Press on the remote control, until the tailgate is closed

or

– with the key in the ignition switch and the hand brake applied, press button in the driver's door until the tailgate is closed

or

– press button in the tailgate.

► Further information – see page 71.

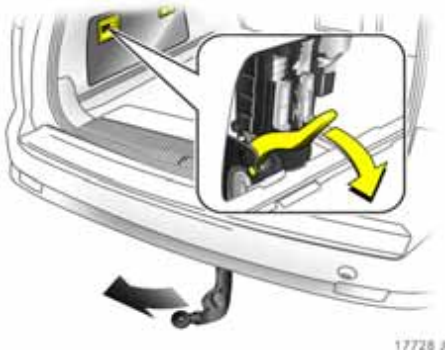

Towing equipment with pivoting coupling ball bar ✻

The release lever is in the left stowage compartment in the luggage compartment. Open cover.

■ Pull release lever downward

– The LED is illuminated as long as the coupling ball bar is not engaged.

– In addition, a warning buzzer sounds and the coupling ball bar pivots downward.

■ Pivot the coupling ball bar rearward until it engages.

– LED must go out
– Warning buzzer must cease
– Otherwise, repeat the procedure.

► Further information – see page 221.

Downloaded from www.Manualslib.com manuals search engine

Ofrecido por www.electromanuales.com

Instruments

Control indicators 34
Instrument display 40
Information display 42
Radio reception ✻..... 59
AUX input ✻..... 60
Infotainment system ✻..... 60
Remote control for infotainment system ✻ and information display .. 60
Twin Audio ✻ 60
Electronic data acquisition at toll systems ✻..... 61
Mobile telephones and radio equipment ✻..... 61

Control indicators

The control indicators described here are not present in all vehicles. The description applies to all instrument versions.

⇦⇨

Turn signal lights
The relevant control indicator flashes when the turn signal is on.

Both control indicators flash with the hazard warning lights on.

Rapid flashing: failure of turn signal or associated fuse. Trailer turn signal failure ✻. For bulb replacement see page 252, for fuses see page 246.

Engine oil pressure
The control indicator illuminates when the ignition is switched on and goes out shortly after the engine starts.

Illuminates when the engine is running
Engine lubrication may be interrupted. This may result in damage to the engine and/or locking of the drive wheels:

1. Move out of the flow of traffic as quickly as possible without impeding other vehicles.
2. Depress clutch.
3. Shift manual transmission or Easytronic ✻ into neutral; for automatic transmission ✻, set selector lever to **N**.
4. Switch off ignition.

⚠Warning

When the engine is off, considerably more force is needed to brake and steer.

Do not remove key until vehicle has come to a standstill, otherwise the steering column lock could engage unexpectedly.

Consult a workshop. We recommend your Vauxhall Authorised Repairer.

Downloaded from www.Manualslib.com manuals search engine

Ofrecido por www.electromanuales.com

Brake system, clutch system
The control indicator illuminates when the ignition is switched on if the hand brake is applied or if the brake or clutch fluid level is too low. Further information – see pages 212, 272.

For vehicles with Easytronic ✻, the control indicator flashes for a few seconds when the ignition is turned off if the hand brake is not applied.

⚠Warning

If it illuminates when the hand brake is not applied: Stop the vehicle; interrupt your journey immediately. Consult a workshop. We recommend your Vauxhall Authorised Repairer.

Alternator
The control indicator illuminates when the ignition is switched on and goes out shortly after the engine starts.

Flashing while starting
Battery voltage too low. Have electrical system tested in a workshop. We recommend your Vauxhall Authorised Repairer.

Illuminates when the engine is running
Stop, switch engine off. Battery is not charged. Engine cooling may not be operating. With a diesel engine the brake servo unit may stop operating. Consult a workshop. We recommend your Vauxhall Authorised Repairer.

Airbag systems ✻, belt tensioners ✻
If it illuminates while driving, there is a fault in the airbag systems, seat occupancy recognition ✻ or the belt tensioners, see pages 108, 117.

Coolant temperature
Illuminates when the engine is running
Stop and turn engine off, coolant temperature is too high. Risk of engine damage. For coolant temperature display see page 41. Check coolant level immediately, see page 270.

Exterior lights
The control indicator is illuminated when the exterior lights are on – see page 128.

SPORT mode of automatic transmission ✻ or Easytronic ✻
The control indicator is illuminated when SPORT mode ✻ is engaged.

Further information – see pages 173, 181.

►

Downloaded from www.Manualslib.com manuals search engine

Ofrecido por www.electromanuales.com

Winter program of automatic transmission ✻ Easytronic ✻
Control indicator is illuminated when winter program is enabled.

Further information – see pages 174, 182.

Door open
Illuminates with the doors open.

Easytronic ✻, start engine
The control indicator illuminates when the ignition is turned on if the foot brake is not operated. It goes off as soon as the foot brake is operated. The engine can only be started with the foot brake operated – see page 171.

Bulb replacement ✻
A bulb has failed. Check the lights, and exchange the failed bulb. Bulb exchange – see page 252.

Bootlid open
Illuminates with the luggage compartment open, close luggage compartment – see page 70.

Fog lights ✻
The control indicator is illuminated when the fog lights are on – see page 130.

Main beam
The control indicator illuminates if the main beam is on and during headlight flash – see pages 14, 128.

Fog tail light
The control indicator is illuminated when the fog tail light is on – see page 130.

Parking distance sensor ✻
see page 204.

Continuous Damping Control ✻, SPORT mode
see page 200.

Seat belt ✻
The control indicator illuminates when the ignition is switched on and remains illuminated until the seat belt is fastened. If the seat belt is not yet fastened after driving off, an acoustic warning also sounds. Fastening the seat belt – see page 109.

Downloaded from www.Manualslib.com manuals search engine

Ofrecido por www.electromanuales.com

Engine electronics, transmission electronics ✻, diesel fuel filter ✻, immobiliser

Illuminates when the engine is running

Fault in engine electronics or transmission electronics. Electronics switch to emergency running programme, fuel consumption may increase and driveability of the vehicle may be impaired – see page 196. Consult a workshop immediately. We recommend your Vauxhall Authorised Repairer.

Diesel engines[1] Z 19 DTL, Z 19 DT, Z 19 DTH: Have water drained from diesel fuel filter, see page 270.

Flashes when the ignition is on

Fault in the electronic immobiliser system; the engine cannot be started – see page 63.

[1] Sales designation – see page 284

Preheating system ✻, Diesel particle filter ✻

Lights

Preheating system active, switches on only if outside temperature is low.

Flashing (with diesel particle filter)

Diesel particle filters must be cleaned. Continue driving and as soon as the road and traffic conditions permit it, increase speed to more than 25 mph (40 km/h), at which point diesel particle filter cleaning will start. The control indicator goes off as soon as cleaning is complete. We recommend leaving the ignition switched on during the cleaning.

Further information – see page 197.

Coolant level

Illuminates when the engine is running

Coolant fluid level too low. Stop, turn off engine. Check coolant fluid level immediately, see page 271.

Anti-lock brake system

see page 212.

Electro-hydraulic power assisted steering

Fault in electro-hydraulic steering system. Power steering may not work. Vehicle can still be steered, but considerably more force is required. We recommend you consult your Vauxhall Authorised Repairer.

Electronic Stability Programme (ESP®Plus) ✻

see page 198.

Seat occupancy recognition ✻

see page 118.

Downloaded from www.Manualslib.com manuals search engine

Ofrecido por www.electromanuales.com

Engine oil level ✻
Illuminates when the engine is running
Engine oil level too low. Check engine oil level and top up engine oil if necessary – see page 268.

Cruise control ✻
see page 202.

Fuel level
Lights
Low fuel level, fuel gauge in reserve area.

Flashing
Fuel supply exhausted, refuel immediately.

Never let the tank run dry!

Petrol engines: erratic fuel supply can cause catalytic converter to overheat – see page 193.

Diesel engines: If the tank is run dry, bleed the fuel system as described on page 229.

Exhaust gases ✻
The control indicator illuminates when the ignition is switched on and goes out shortly after the engine starts.

Illuminates when the engine is running
Fault in emission control system. The permitted emission limits may be exceeded. Consult a workshop. We recommend your Vauxhall Authorised Repairer.

If it flashes when the engine is running:
Fault that can lead to destruction of the catalytic converter is indicated – see page 195. Consult a workshop immediately. We recommend your Vauxhall Authorised Repairer.

Tyre pressure monitoring system ✻
Illuminated red
Tyre pressure difference, check tyre pressure at next opportunity.

Flashes red
Considerable pressure difference or direct loss of pressure, stop immediately and check tyres and tyre pressure.

Illuminated yellow
Fault in system, consult a workshop. We recommend your Vauxhall Authorised Repairer.

Tyre pressure monitoring system – see page 206.

Adaptive Forward Lighting ✻ (AFL)
System fault. In the event of malfunction of the curve lighting pivot function, the releveant dipped beam light is deactivated. Consult a workshop. We recommend your Vauxhall Authorised Repairer.

AFL – see page 131.

Downloaded from www.Manualslib.com manuals search engine

Ofrecido por www.electromanuales.com

Transmission display ✻
Display of the selected gear position with automatic transmission ✻ or the selected gear with Easytronic ✻:

P Park position of automatic transmission.

R Reverse gear.

N Neutral or idling position.

A Automatic mode of Easytronic.

M Manual mode of Easytronic.

D Automatic mode of automatic transmission.

1-5 Manual mode, current gear for Easytronic.

1-5 and
1-6 ✻ Manual mode, selected gear with automatic.

For Easytronic ✻, the display flashes for a few seconds if **A**, **M** or **R** is selected when the engine is running but the foot brake is not depressed.

InSP
Service interval display ✻
When InSP appears in the odometer display, make an appointment with a workshop for servicing as soon as possible. We recommend your Vauxhall Authorised Repairer.

Maintenance, inspection system
– see page 266.

Downloaded from www.Manualslib.com manuals search engine

Ofrecido por www.electromanuales.com

Instrument display

On some versions, the pointer of the tachometer, speedometer and fuel gauge briefly moves to its end position when the ignition is switched on.

Tachometer
Indicates engine speed.

Warning zone: Maximum permissible engine speed exceeded; danger to engine.

Speedometer
Indicates the vehicle speed.

Odometer
Records the miles driven.

Display in the event of airbag system malfunction – see page 117.

Trip odometer
To set to zero, hold reset knob down for approx. 2 seconds with ignition switched on.

Downloaded from www.Manualslib.com manuals search engine

Ofrecido por www.electromanuales.com

Coolant temperature display

Pointer in zone at left	=	Engine operating temperature not yet reached
Pointer between the zones	=	Normal operating temperature
Pointer in warning zone at right or is illuminated	=	Temperature too high: Stop. Switch off engine. Risk of engine damage. Check coolant level immediately, see page 271.

For physical reasons, the engine temperature gauge shows the coolant temperature only if the coolant level is adequate.

During operation the system is pressurised. The temperature may therefore rise briefly to over 100 °C.

Fuel gauge

Pointer in left zone or illuminated	=	Reserve area
Pointer in left zone or flashing	=	Fill up – see page 191

Never run the tank dry!

Diesel engines: If the tank is run dry, bleed the fuel system as described on page 229.

Because of the fuel remaining in the tank, the amount of fuel required to fill the tank may be less than the specified tank capacity.

Downloaded from www.Manualslib.com manuals search engine

Ofrecido por www.electromanuales.com

Information display

Triple information display
Display of time, outside temperature and date/infotainment system ✻ (when it is on).

When the ignition is off, the time, date and outside temperature can be presented for 15 seconds by briefly pressing one of the two buttons below the display.

An **F** in the display indicates a fault. Have the cause of the fault remedied. We recommend that you consult your Vauxhall Authorised Repairer.

Board information display ✻
Display of time, outside temperature and date/infotainment system ✻ (when it is on).

An **F** in the display indicates a fault. Have the cause of the fault remedied. We recommend that you consult your Vauxhall Authorised Repairer.

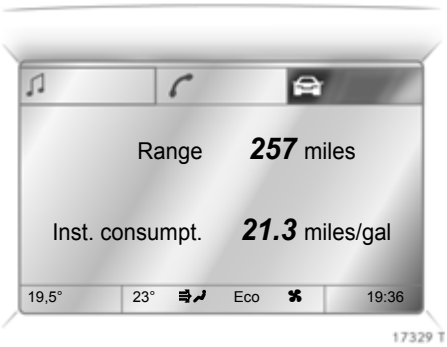

Graphical information display ✻, Colour information display ✻
Display of time, outside temperature, date/infotainment system ✻ (when it is on) and climate control system ✻.

The graphical information display presents the information in monochrome. The colour information display presents the information in colour.

Downloaded from www.Manualslib.com manuals search engine

Ofrecido por www.electromanuales.com

The type of information and how it is displayed depends on the equipment of the vehicle and the Infotainment system ✻,trip computer ✻ and climate control system ✻ settings.

Some information appears in the display in an abbreviated form.

For Infotainment system see Infotainment system instructions. For climate control system - see page 158.

An **F** in the display indicates a fault. Have the cause of the fault remedied. We recommend that you consult your Vauxhall Authorised Repairer.

Outside temperature

A fall in temperature is indicated immediately and a rise in temperature after a time delay.

If outside temperature drops to 3 °C, the symbol ❄ illuminates in the triple information display or the board information display ✻ as a warning for icy road surfaces. ❄ remains illuminated until temperatures reach at least 5 °C.

In vehicles with graphical information display ✻ or colour information display ✻, an icy road surface warning message appears in the display. No message is displayed if the temperature is less than -5 °C.

⚠Warning

Caution: The road surface may already be icy even though the display indicates a few degrees above 0 °C.

Downloaded from www.Manualslib.com manuals search engine

Ofrecido por www.electromanuales.com

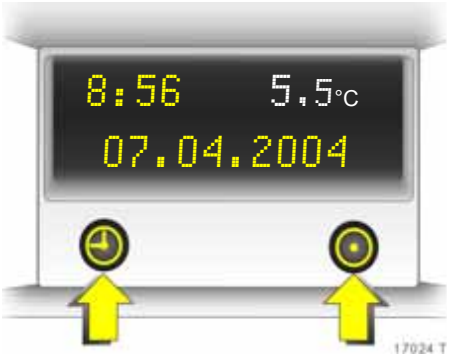

Triple information display

Set date and time

Infotainment system off: press ◴ and ⊙ below the display as follows:

Press ◴ for approx. 2 seconds:
Day flashes
⊙: Set day

◴: Month flashes
⊙: Set month

◴: Year flashes
⊙: Set year

◴: Hours flash
⊙: Set hours

◴: Minutes flash
⊙: Set minutes

◴: Clock is started.

Correcting time ✻

Some RDS transmitters do not send a correct time signal. If the incorrect time is continually displayed, deactivate automatic time synchronisation ✻, see next column, and set the time manually.

The automatic setting is indicated by ◴ in the display.

Deactivating/activating automatic time synchronisation: infotainment system off, press ◴ and ⊙ below the display:

Hold down ◴ for approx. 2 sec., clock display is now in setting mode,

Press ◴ twice (until year flashes),

Press ◴ and hold down for approx. 3 seconds until ◴ flashes in display ✻ and text "RDS TIME" appears (years flash during this time),

Press ⊙, display shows:
RDS TIME 0 = Off
Press ⊙, display shows:
RDS TIME 1 = On

Press ◴ three times.

Downloaded from www.Manualslib.com manuals search engine

Ofrecido por www.electromanuales.com

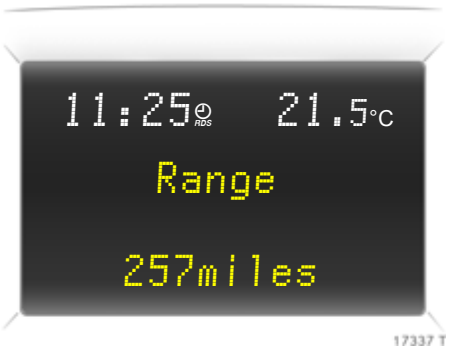

Board information display ✻, Selecting functions

Functions and settings of some equipment ✻ can be accessed via the board information display.

This is done via the menus and the buttons/four-way button on the infotainment system ✻ or with the left adjuster wheel ✻ on the steering wheel. The relevant menu options are then shown on the subsequent row of the display.

Select options via the menus and with the buttons/four-way button on the infotainment system ✻.

Depending on the equipment level of the vehicle, menu options can be selected with the left adjuster wheel ✻ on the steering wheel. The relevant menu options are then shown on the subsequent row of the display.

If check control ✻ warning messages are displayed, the display is blocked for other functions. Acknowledge warning message by pressing the right or left side of the four-way button or by pressing the left adjuster wheel ✻ on the steering wheel. If there are several warning messages, acknowledge them one at a time.

System settings – see page 46.

Trip computer ✻ – see page 48.

Downloaded from www.Manualslib.com manuals search engine

Ofrecido por www.electromanuales.com

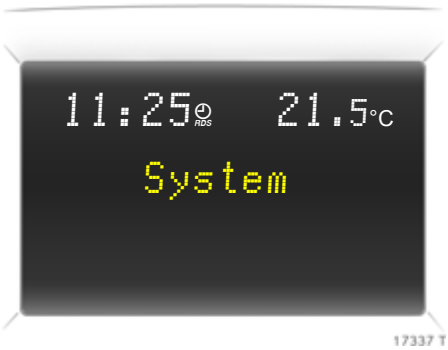

Board information display ✻, System settings

Press the **Settings** button of the infotainment system. Menu item **Audio** or **System** will appear.

Press the lower button of the four-way button to reach menu item **System**. After pressing the right-hand part of the four-way button, the first function of the **System** menu is shown.

Some information appears in the display in an abbreviated form.

The functions are displayed in the following order:

- Time synchronisation
- Time, setting hours
- Time, setting minutes
- Date, setting day
- Date, setting month
- Date, setting year
- Ignition logic
- Language selection
- Setting units of measure

Correcting time ✻
Some RDS transmitters do not send a correct time signal. If the incorrect time is continually displayed, deactivate automatic time synchronisation ✻ and set the time manually - see next page.

Downloaded from www.Manualslib.com manuals search engine

Ofrecido por www.electromanuales.com

The automatic setting is indicated by in the display.

To correct time with the help of RDS, select the menu item for time synchronisation from the **Settings** menu.

Make the desired setting.

Setting date and time
Select the menu item for time and date setting from the **Settings** menu.

Make the desired setting.

The setting is executed upon exit from the menu item.

Ignition logic ✻
See infotainment system instructions.

Language selection
You can select the display language for some functions.

Select the menu item for language from the **Settings** menu and make the desired setting.

Setting units of measure
You can select which units of measure are to be used.

Select the menu item for units of measure from the **Settings** menu and make the desired setting.

Downloaded from www.Manualslib.com manuals search engine

Ofrecido por www.electromanuales.com

Board information display ✻, trip computer ✻

The trip computer provides information on driving data, which is continually recorded and evaluated electronically.

Access trip computer vehicle data by pressing the **BC** button on the infotainment system or the left adjuster wheel ✻ on the steering wheel.

Some information appears in the display in an abbreviated form.

Once an audio function has been selected, the subsequent rows of the trip computer function are displayed.

The functions are displayed in the following order:

- Instantaneous consumption
- Average consumption
- Effective consumption
- Average speed
- Distance travelled
- Range
- Stop watch

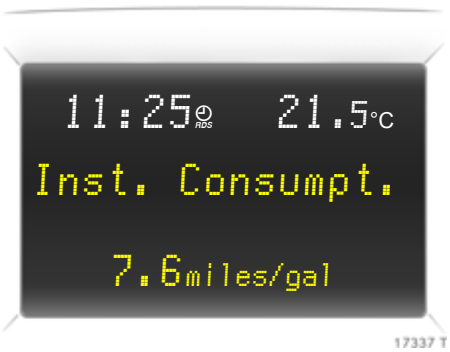

Instantaneous consumption
Display changes depending on speed:

Display in gal/h	below 8 mph (13 km/h),
Display in mpg	below 8 mph (13 km/h).

Average consumption
Display of average consumption. Calculation can be restarted at any time - see next page.

Effective consumption
Fuel consumption display.
The measurement can be restarted at any time - see next page.

Average speed
Display of average speed. Calculation can be restarted at any time - see next page.

Stoppages in the journey with the ignition off are not included in the calculations.

Distance travelled
Display of mileage. Calculation can be restarted at any time - see next page.

Downloaded from www.Manualslib.com manuals search engine

Ofrecido por www.electromanuales.com

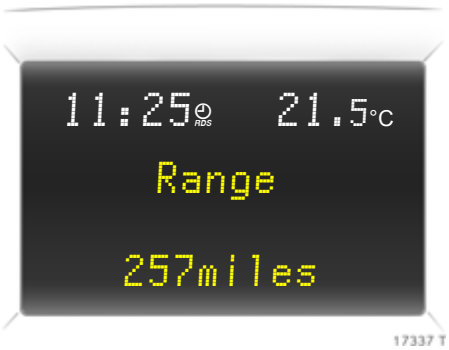

Range
Range is calculated from current fuel tank content and instantaneous consumption. The display shows average values.

After refuelling, the vehicle updates the range automatically after a brief delay.

If less than 30 miles (50 km) can be driven with the fuel remaining in the tank, the warning "Range" appears on the display.

If less than 20 miles (30 km) can be driven with the fuel remaining in the tank, the warning "Refuel!" ✻ appears on the display.

Stop watch
Operation with the four-way button:

Press right button	Start/Stop,
Press left button for more than 2 seconds	Reset

Operating using the left adjuster wheel ✻ on the steering wheel:

Press	Start/Stop.

Resetting trip computer information
The following trip computer information can be reset (restart of measurement/ calculation):

- Average consumption,
- Effective consumption,
- Average speed,
- Distance travelled.

Select the desired trip computer information.

Reset using the left wheel on the steering wheel or the right/left button of the four-way button:

Press for more than 2 seconds	current value
Press for more than 4 seconds	all values.

Interruption of power supply
If the power supply has been interrupted or if the battery voltage has dropped too low, the values stored in the trip computer will be lost.

Downloaded from www.Manualslib.com manuals search engine

Ofrecido por www.electromanuales.com

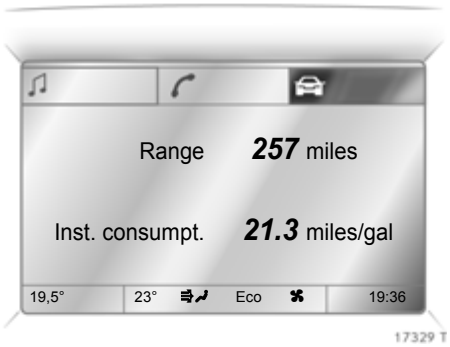

Graphical information display ✻ or colour information display ✻, Selecting functions

The functions and settings of some equipment ✻ can be accessed via the graphical information display or the colour information display.

Functions are selected and executed in the menu on the display using the four-way button, the multifunction button ✻ on the infotainment system or the left wheel ✻ on the steering wheel.

To select with four-way button:

Select menu items via menus and with the buttons/four-way button of the infotainment system.

If check control ✻ warning messages are displayed, the display is blocked for other functions. Acknowledge warning message by pressing the right or left side of the four-way button. If there are several warning messages, acknowledge them one at a time.

To select using the multifunction button:

Turn	Mark menu items or commands, select functions
Press	Select marked item, confirm command.

To exit a menu, turn the multifunction button left or right to **Return** or **Main** and select.

If check control ✻ issues a warning message, the display is blocked from other functions. Acknowledge the message by pressing the multifunction button. If there are several warning messages, acknowledge them one at a time.

Downloaded from www.Manualslib.com manuals search engine

Ofrecido por www.electromanuales.com

To select using the left adjuster wheel ✻ on the steering wheel:

Turn up	Previous menu item
Turn down	Next menu item
Press	Select marked item, confirm command.

If check control ✻ warning messages are displayed, the displaying of other messages is blocked. Acknowledge the warning message by pressing the left adjuster wheel. If there are several warning messages, acknowledge them one at a time.

For each functional area there is a main page (Main), which is selected at the top edge of the display (not with the Infotainment system CD 30 or the Mobile Phone Portal):

- Audio,
- Navigation ✻,
- Telephone ✻,
- Trip computer ✻.

For audio, navigation ✻ and telephone functions ✻, see infotainment system instructions.

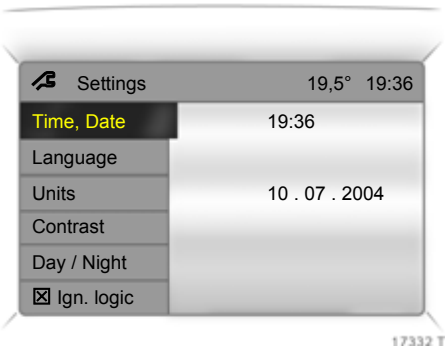

System settings
The settings are accessed via the **Settings** menu.

Press the **Main** button ✻ (not found on all infotainment systems) on the infotainment system (call up main display).

Press the **Settings** button of the infotainment system. No menu may be selected with Infotainment System CD 30.

The **Settings** menu is displayed.

Downloaded from www.Manualslib.com manuals search engine

Ofrecido por www.electromanuales.com

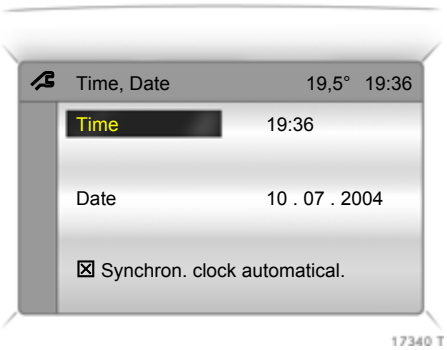

Setting the date and time ✻
Select menu item **Time, Date** from the **Settings** menu.

The menu for **Time, Date** is displayed.

Select the menu items required:

Make the desired setting.

Correcting time ✻
For systems with GPS receiver[1], time and date are automatically set upon receipt of a GPS satellite signal. If the displayed time does not correspond to local time, time can be manually corrected in 30-minute increments or automatically corrected via receipt of an RDS time signal[2] ✻.

Some RDS transmitters do not send correct time signals. If the incorrect time is displayed often, deactivate automatic time synchronisation ✻ and set the time manually.

To correct time with the help of RDS, select menu item **Synchron. clock automatical.** from the **Time, Date** menu.

The box in front of **Synchron. clock automatical.** will be ticked; see Fig. 17340 T.

[1] **GPS = G**lobal **P**ositioning **S**ystem, Satellite system for world-wide positioning.
[2] **RDS = R**adio **D**ata **S**ystem.

Language selection
You can select the display language for some functions.

Select menu item **Language** from the **Settings** menu.

The available languages are displayed.

Downloaded from www.Manualslib.com manuals search engine

Ofrecido por www.electromanuales.com

Select the desired language.

Selections are indicated by a ▶ in front of the menu item.

In systems with voice output ✻, when the language setting of the display is changed the system will ask whether the announcement language should also be changed – see Infotainment system instructions.

Setting units of measure
You can select which units of measure are to be used.

Select menu item **Units** from the **Settings** menu.

The available units are displayed.

Select the desired unit.

Selections are indicated by a ● in front of the menu item.

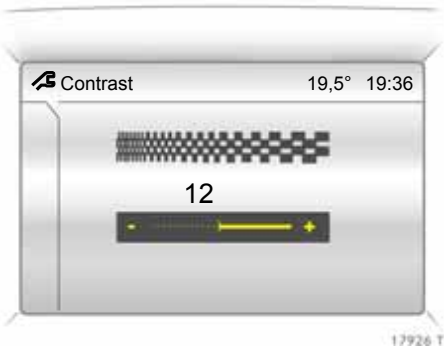

Adjusting contrast ✻ (graphical information display)
Select menu item **Contrast** from the **Settings** menu.

The menu for **Contrast** is displayed.

Confirm the required setting.

Downloaded from www.Manualslib.com manuals search engine

Ofrecido por www.electromanuales.com

Setting display mode ✻
The display can be adjusted to suit the light conditions, black or coloured text on a light background or white or coloured text on a dark background.

Select menu item **Day / Night** from the **Settings** menu.

The options are displayed.

Automatic: adapted based on vehicle lighting.

Always day design: black or coloured text on light background.

Always night design: white or coloured text on dark background.

Selections are indicated by a ● in front of the menu item.

Ignition logic ✻
See infotainment system instructions.

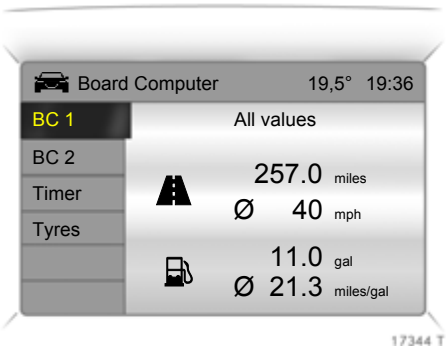

Graphical information display ✻ or colour information display ✻, Trip computer ✻

The trip computers provide information on driving data, which is continually recorded and evaluated electronically.

The trip computer main page provides information on range and instantaneous consumption.

To display other trip computer data, press the **BC** button on the infotainment system ✻, select the trip computer menu on the display or press the left adjuster wheel ✻ on the steering wheel.

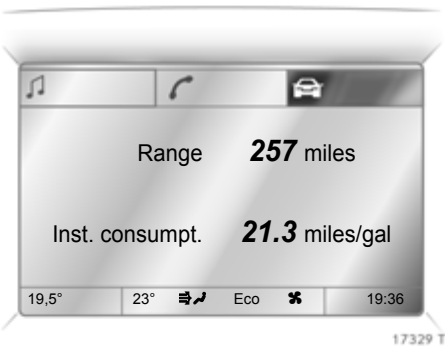

Range
Range is calculated from current fuel tank content and instantaneous consumption. The display shows average values.

After refuelling, the vehicle updates the range automatically after a brief delay.

Downloaded from www.Manualslib.com manuals search engine

Ofrecido por www.electromanuales.com

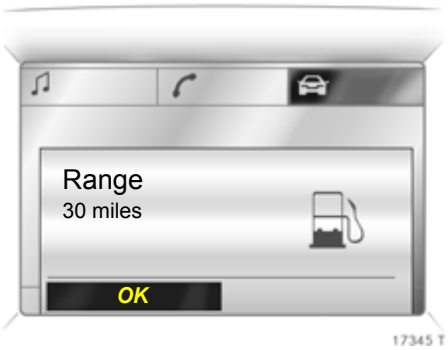

If less than 30 miles (50 km) can be driven with the fuel remaining in the tank, the warning "Range" appears on the display.

If less than 20 miles (30 km) can be driven with the fuel remaining in the tank, the warning "Please refuel!" ✻ appears on the display.

Acknowledge the menu item as described on page 50.

Instantaneous consumption
Display changes depending on speed:

Display in gal/h below 8 mph (13 km/h),

Display in mpg below 8 mph (13 km/h).

Distance travelled
Displays number of miles driven. Measurement can be restarted at any time, see next column.

Average speed
Average speed calculation. Measurement can be restarted at any time, see next column.

Stoppages in the journey with the ignition off are not included in the calculations.

Effective consumption
Shows amount of fuel consumed. The measurement can be re-started at any time. See next column.

Average consumption
Calculation of average consumption. The measurement can be re-started at any time. See next column.

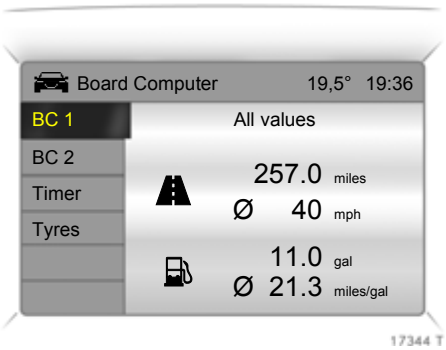

Resetting trip computer information
The following trip computer information can be reset (restart measurements):

- Distance travelled,
- Average speed,
- Effective consumption,
- Average consumption.

Select **BC 1** or **BC 2** from the trip computer menu.

Downloaded from www.Manualslib.com manuals search engine

Ofrecido por www.electromanuales.com

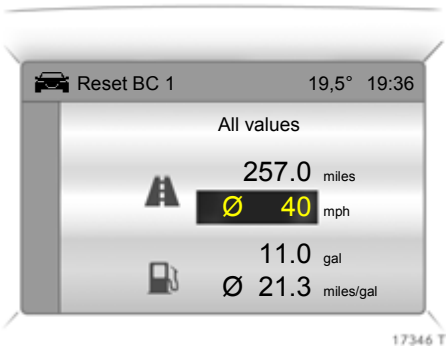

The information from both trip computers can be reset separately, making it possible to evaluate data over different time periods.

Select the desired trip computer information.

The value for the selected function will be reset and recalculated.

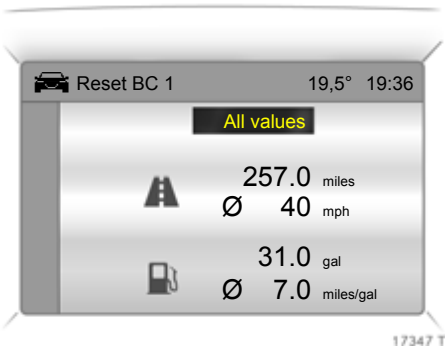

To reset all information of a trip computer, select menu item **All values**.

If trip computer information has been selected, "- - -" is displayed after a reset. The recalculated values are displayed after a brief delay.

Interruption of power supply
If the power supply has been interrupted or if the battery voltage has dropped too low, the values stored in the trip computer will be lost.

Downloaded from www.Manualslib.com manuals search engine

Ofrecido por www.electromanuales.com

Stop watch
Select menu item **Timer** from the **Board Computer** menu.

The **Timer** menu is displayed.

To start, select menu item **Start**.

To reset, select menu item **Reset**.

The desired stop watch display can be selected from the **Options** menu ✻:

Driving Time excl. Stops
The time the vehicle is in motion is recorded. Stationary time is not included.

Driving Time incl. Stops
The time the vehicle is in motion is recorded. The time the vehicle is stationary with the key in the ignition switch is included.

Travel Time
Measurement of the time from manual activation via **Start** to manual deactivation via **Reset**.

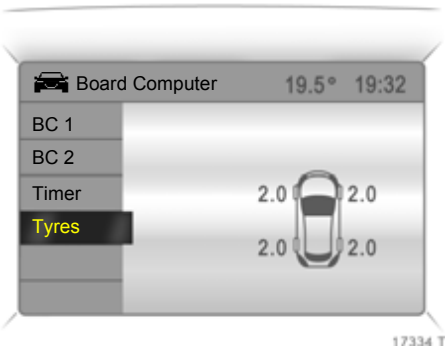

Display of current tyre pressure ✻

Select menu item **Tyres** from the **Board Computer** menu.

The current pressure of each tyre is displayed.

Further information – see page 206.

Downloaded from www.Manualslib.com manuals search engine

Ofrecido por www.electromanuales.com

Check control ✻

Check control monitors several fluid levels, the tyre pressure ✻, the radio remote control batteries, Vauxhall alarm system ✻ and the main vehicle lighting systems, including the cables and fuses. When towing, the trailer lighting system is also monitored.

Once the ignition has been switched on, all check control functions are automatically verified.

Warning messages appear on the display. If there are several warning messages, they are displayed one after the other.

Some information appears in the display in an abbreviated form.

Examples of warning messages for the graphical information display ✻ and colour information display ✻ are depicted. On the board information display, messages appear in an abbreviated form.

Acknowledge warning messages as described on pages 45, 50. Unacknowledged warning messages can be re-displayed later.

Warning messages:

Remote Control Battery check

Remote control battery voltage is too low – see page 65.

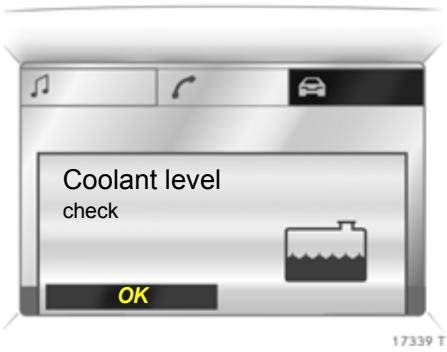

Brakelight switch check

Fault. Brake light does not come on when brake applied. Have cause of fault remedied immediately. We recommend that you consult your Vauxhall Authorised Repairer.

Safeguard check

Fault. System error in Vauxhall alarm system. Have cause of fault remedied immediately. We recommend that you consult your Vauxhall Authorised Repairer.

Downloaded from www.Manualslib.com manuals search engine

Ofrecido por www.electromanuales.com

If there is a fault in the vehicle lighting system, the respective location of the fault is displayed as text, e.g.:

Brakelight
check right

If brake light is defective, the relevant tail light takes over the brake light function.

In vehicles with tyre pressure monitoring system ✻, if tyre pressure is too low, the display indicates which tyre to check, e.g.:

Tyre pressure
check rear
right tyre
(value in bar)

Check tyre pressure at next opportunity using suitable gauge. Tyre pressure monitoring system ✻ – see page 206. Checking tyre pressure – see page 299.

In vehicles with tyre pressure monitoring system ✻, if there is major loss of pressure in a tyre, the display indicates the tyre at fault, e.g.:

Attention!
Rear left tyre
pressure loss
(value in bar)

Stop immediately and check tyre and tyre pressure. For tyre pressure monitoring system ✻ – see page 206.

Wash
Fluid Level
check

Fluid level in windscreen wash system too low. Topping up wash fluid – see page 275.

Rear window wash system and headlight wash system ✻ are deactivated if wash fluid level is low.

Coolant level
check

Fluid level in engine cooling system is low. Check coolant level immediately – see page 270.

Interruption of power supply
Stored warning messages appear on the display one after the other.

Radio reception ✻

Car radio reception differs from domestic radio reception:

As the vehicle antenna is relatively near the ground, the broadcasting companies cannot guarantee the same quality of reception as obtained with a domestic radio using an overhead antenna.

- Changes in distance from the transmitter,
- multi-path reception due to reflection and
- shadowing

may cause hissing, noise, distortion or loss of reception altogether.

Downloaded from www.Manualslib.com manuals search engine

Ofrecido por www.electromanuales.com

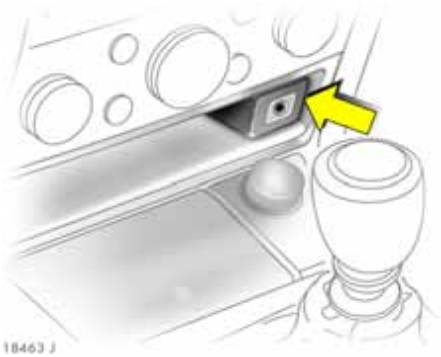

AUX input ✻

The AUX input is in the stowage compartment in the centre console.

An external audio source such as a portable CD player can be connected via the AUX input.

Keep AUX input clean and dry at all times.

Further information is available in the infotainment system operating instructions.

Infotainment system ✻

The infotainment system is operated as described in the operating instructions.

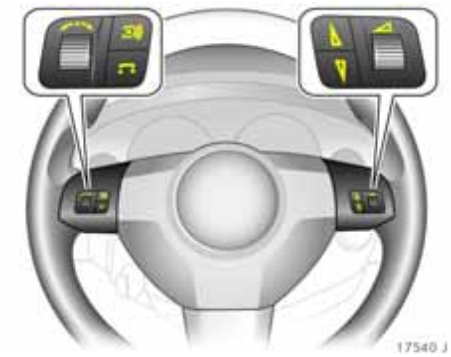

Remote control for infotainment system ✻ and information display

The functions of the infotainment system ✻ and the information display can be operated with the buttons on the steering wheel.

Further information – see pages 45, 50 and the relevant operating instructions.

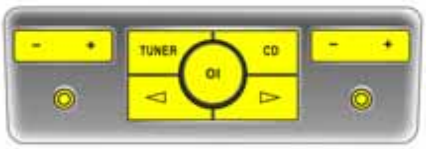

Twin Audio ✻

Twin Audio gives rear seat occupants the opportunity to listen to the audio source set on the infotainment system ✻ or one of the other audio sources.

Only an audio source that is not currently active on the infotainment system can be controlled using Twin Audio.

Two headphone connections are available, with separate volume controls.

Further information is available in the infotainment system operating instructions.

Downloaded from www.Manualslib.com manuals search engine

Ofrecido por www.electromanuales.com

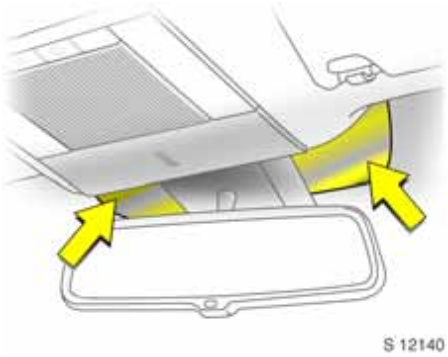

Electronic data acquisition at toll systems ✻

In vehicles with heat-reflecting windscreen[1] ✻ Attach chipcard ✻ for electronic data recording and fee payment in black area of windscreen on left or right-hand side behind the interior mirror, see markings in figure. Attaching the chipcard outside this area may cause data recording malfunctions.

[1] Solar Reflect.

Mobile telephones and radio equipment ✻

The Vauxhall installation instructions and the operating guidelines provided by the telephone manufacturer must be observed when fitting and operating a mobile telephone. Failure to do so could invalidate the vehicle's operating permit (EU Directive 95/54/EG).

Recommended prerequisites for fault-free operation:

- Professionally installed exterior antenna to obtain the maximum range possible,
- maximum transmission power 10 Watt,
- installation of the telephone in a suitable spot (see information on page 120).

Obtain advice on predetermined installation locations for the external antenna and equipment holder and ways of using devices with transmission power of more than 10 Watts. We recommend that you consult your Vauxhall Authorised Repairer, who will have brackets and various installation kits available as accessories and will install them in accordance with regulations.

A hands-free attachment without an external antenna in mobile phone standards GSM 900/1800/1900 and UMTS must only be operated if the maximum transmission power of the mobile phone does not exceed 2 Watts with GSM 900 and 1 Watt in other cases. The operating regulations stipulated by the manufacturer of the telephone and the hands-free attachment must be complied with.

For reasons of safety, we recommend that you do not use the phone while driving. Even use of a handsfree set can be a distraction while driving. Be sure to observe any country-specific regulations.

⚠Warning

Mobile phones and radio equipment may cause malfunctions in the vehicle electronics if they are operated in the vehicle without the external antenna unless the above-mentioned regulations are complied with.

Mobile phones that do not comply with the above-mentioned mobile phone standard and radio equipment must only be operated using an antenna that is attached to the exterior of the vehicle.

Downloaded from www.Manualslib.com manuals search engine

Ofrecido por www.electromanuales.com

Keys, doors, bonnet

Electronic immobiliser 63
Radio remote control 64
Central locking system 66
Fault when locking or unlocking..... 69
Luggage compartment..... 70
Vauxhall alarm system ✻..... 74
Child safety locks..... 77
Universal radio remote control in mirror housing ✻ 77
Bonnet 80

Replacement keys

The key is a constituent of the electronic immobiliser. Ordering keys from a Vauxhall Authorised Repairer guarantees problem-free operation of the electronic immobiliser.

Keep the spare key in a safe spot.

Locks, see page 281.

Car Pass ✻

The Car Pass contains all of the vehicle's data and should therefore not be kept in the vehicle.

Have your Car Pass on hand when consulting a Vauxhall Authorised Repairer.

Key with foldaway key section ✻

Press button to extend. Press button to retract and audibly engage key section.

Downloaded from www.Manualslib.com manuals search engine

Ofrecido por www.electromanuales.com

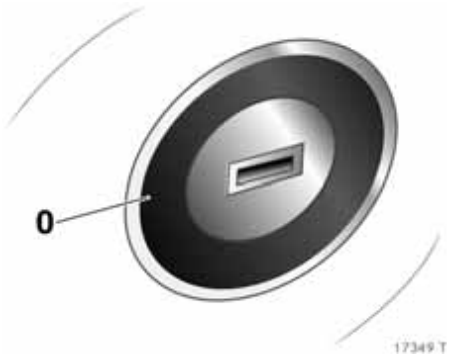

Electronic immobiliser

The system checks whether the vehicle may be started using the key that has been inserted. If the key is recognised as "authorised" the vehicle can be started. The check is carried out via a transponder in the key.

The electronic immobiliser activates automatically when the key is removed from the ignition switch.

Control indicator for immobiliser
Control indicator illuminates briefly when the ignition is switched on.

If the control indicator flashes when the ignition is on, there is a fault in the system; the engine cannot be started. Switch off the ignition and then repeat the start attempt.

If control indicator continues to flash, try to start the engine using the spare key and consult a workshop. We recommend your Vauxhall Authorised Repairer.

If control indicator illuminates after the engine is started, there is a fault in the engine electronics or transmission electronics ✻ (see pages 37, 176, 184, 196) or there is water in the diesel fuel filter ✻ (see page 270).

Note
The immobiliser does not lock the doors. Therefore, after leaving the vehicle always lock it and switch on the Vauxhall alarm system ✻ – see pages 66, 74.

Downloaded from www.Manualslib.com manuals search engine

Ofrecido por www.electromanuales.com

Radio remote control

The radio remote control is integrated in the key.

Used to operate:
- central locking system,
- mechanical anti-theft locking system ✻,
- Vauxhall alarm system ✻,
- electrically operated tailgate ✻.

In addition, electric windows ✻ can be opened and closed using the radio remote control. The electric sun roof ✻ can be closed using the radio remote control.

The radio remote control has a range of approx. 3 metres. This range can be affected by outside influences. Aim the remote control at the vehicle to operate.

Handle the radio remote control with care, protect it from moisture and high temperatures and avoid unnecessary operation.

The hazard warning lights come on to indicate that the remote control is operational.

Store and activate personal vehicle settings using the radio remote control
The settings for the instrument illumination, the central locking system. the memory function ✻ for the driver's seat and the mirror and the climate control system ✻ are stored automatically depending on the key that is used.

Different settings are stored for each remote control. Use of a remote control will activate the settings associated with it.

The settings for five radio remote controls can be stored.

Central locking system,
see page 66.

Mechanical anti-theft locking system ✻,
see page 66.

Boot lid or tailgate,
see page 70.

Vauxhall alarm system ✻,
see page 74.

Electric windows ✻,
see page 136.

Electrically operated sun roof ✻,
see page 139.

Downloaded from www.Manualslib.com manuals search engine

Ofrecido por www.electromanuales.com

Fault
If the central locking system cannot be operated with the radio remote control, it may be due to the following:

- The range of the radio remote control has been exceeded.
- Radio remote control battery voltage is too low. Battery replacement - see next page.
- Frequent, repeated operation of the radio remote control outside the reception range of the vehicle (e.g. too far from vehicle, remote control is then no longer recognised). Remote control synchronisation – see next page.
- If the central locking system is overloaded as a result of repeated operation at short intervals. The power supply is cut off for a brief period.
- Interference from higher-power radio waves from other sources.

We recommended that you have the cause of the fault remedied by your Vauxhall Authorised Repairer.

Manual unlocking and locking using the vehicle key, see page 69.

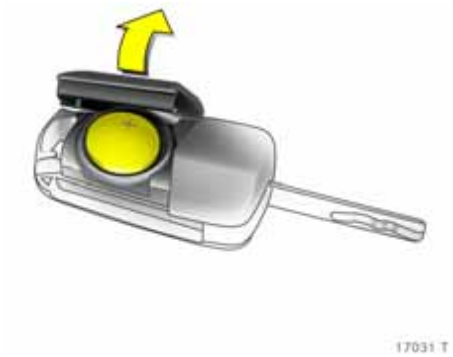

Remote control battery replacement
Replace the battery as soon as the range of the radio remote control begins to shrink.

Extending the key – see page 62.

Open the radio remote control. Replace the battery (battery type – see page 307), noting installation position. Close the radio remote control.

Make sure that you dispose of old batteries in accordance with environmental protection regulations.

Radio remote control synchronisation
After a battery change, unlock door with key in lock, see page 69. Inserting the key into the lock synchronises the radio remote control.

Downloaded from www.Manualslib.com manuals search engine

Ofrecido por www.electromanuales.com

Central locking system

For doors, boot lid/tailgate and tank flap.

To lock

Press button ═ on radio remote control.

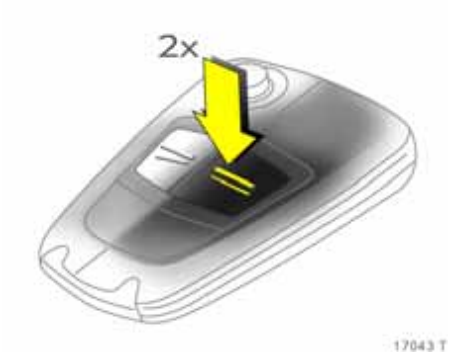

Securing
with the mechanical anti-theft locking system ✻

⚠Warning

Do not use the system if there are people in the vehicle! The doors cannot be unlocked from inside.

All doors must be closed. Press button ═ on radio remote control again no more than 15 seconds after locking.

Lock buttons on all doors are positioned such that doors cannot be opened.

If the ignition was on, the driver's door must be opened and closed once so that the vehicle can be secured.

To unlock

Press button ⊜ on radio remote control.

Downloaded from www.Manualslib.com manuals search engine

Ofrecido por www.electromanuales.com

Programming unlocking mode ✻
When the vehicle is delivered from the factory, the remote control is preset so that a single press of the button opens all of the doors and the luggage compartment. The unit can be configured so that a single press of the button unlocks the entire vehicle or just the driver's door.

Change to presetting:
Hold button on the remote control and button in the driver's door depressed simultaneously until a double buzzer sounds. Afterwards, only the driver's door will be unlocked when button is pressed once.

The entire vehicle is then unlocked by pressing button on the remote control twice.

To restore the original settings, hold button of the remote control and button in the driver's door depressed simultaneously until a buzzer sounds.

The current setting is stored for the radio remote control, see page 64.

Central locking switch for locking and unlocking the doors from inside the vehicle
Press button in the driver's door: Doors and luggage compartment are locked.

Press button in the driver's door: Doors and luggage compartment are unlocked.

In the estate with electrically operated tailgate ✻, the doors and luggage compartment are locked and unlocked with button .

When the mechanical anti-theft locking system is active ✻, see page 66, the doors cannot be unlocked with this button.

If the vehicle is locked using the remote control, buttons and in the driver's door are inoperable.

Automatic locking ✻
The central locking can be set to lock automatically at a certain speed.

To activate the function, hold button of the remote control and button in the driver's door depressed simultaneously until a double buzzer sounds.

The doors and luggage compartment are unlocked by switching off the ignition or by pressing button or, for estate with electrically operated tailgate ✻, by pressing button in the driver's door. Individual doors can be unlocked by pulling the lock button.

To deactivate the function, hold button of the remote control and button in the driver's door depressed simultaneously until a buzzer sounds.

The current setting is stored for the radio remote control, see page 64.

Downloaded from www.Manualslib.com manuals search engine

Ofrecido por www.electromanuales.com

Note

- If the driver's door is not closed properly, the central locking system will unlock again immediately after locking.
- 30 seconds after unlocking using the radio remote control the doors automatically lock again ✻ if neither a door nor the luggage compartment has been opened.
- To lock the doors from within (e.g. to prevent undesired access from outside), press the central locking switch 🚗.
- If they are locked, the doors and the luggage compartment unlock automatically in the event of an accident of a certain severity (to permit outside assistance). – Prerequisite: Ignition must not be switched off.

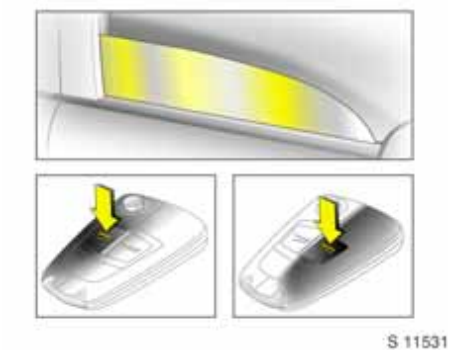

Window and sliding roof operation ✻ from the outside.

⚠Warning

Take care when operating the electric windows and the sun roof. Risk of injury, particularly to children.

Vehicle passengers should be informed accordingly.

Keep a close watch on the windows and sun roof when closing them. Ensure that nothing becomes trapped in them as they move.

On vehicles with electric windows, the windows can be opened and closed from outside: Hold down button ⊿ or ═ on the remote control until all windows are open or fully closed.

The sun roof can be closed from outside: Hold down button ═ on the remote control until the sun roof is fully closed.

Version with electrically retractable exterior mirrors ✻: The mirrors are retracted/extended when the windows are closed/opened with the remote control.

If the mirrors are retracted using the button in the driver's door, they remain in this position when the windows are opened.

Downloaded from www.Manualslib.com manuals search engine

Ofrecido por www.electromanuales.com

Automatic closing ✻
If the mechanical anti-theft locking system ✻ is activated, the electronic windows and sun roof ✻ are automatically closed and the electrically retractable exterior mirrors ✻ are automatically retracted as soon as the rain sensor ✻ detects water on the windscreen.

To safeguard the battery from discharge by the rain sensor ✻, after four hours the windows and sun roof ✻ are automatically closed and the electrically retractable exterior mirrors ✻ are automatically retracted.

For further information on windows and the sun roof – see pages 138, 141.

Fault
If the central locking system cannot be operated with the radio remote control, it may be due to the following:

- If the central locking system is overloaded as a result of repeated operation at short intervals. The power supply is cut off for a brief period.
- Defective fuse in fuse box – see page 246.

Consult your Vauxhall Authorised Repairer to have the cause of the fault remedied. Operating the driver's door with the key - see next section.

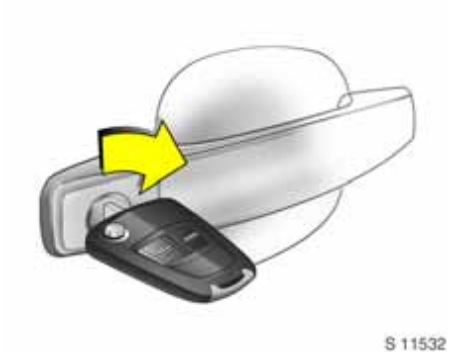

Fault when locking or unlocking

Radio remote control fault
To unlock
Insert key into lock in driver's door and turn forwards as far as it will go. Turn key back to vertical position and remove from lock. Unlock driver's door with central locking switch, see page 67.

The mechanical anti-theft locking system ✻ and the Vauxhall alarm system ✻ are deactivated when the key is inserted in the ignition switch.

To lock
Open front passenger door, close driver's door, lock vehicle using central locking switch, see page 67, close front passenger door.

Malfunction in central locking system
To unlock
Insert key into driver's door lock and turn forwards as far as it will go. Turn key back to a vertical position and remove. The other doors can be unlocked by pulling the interior lock button (unless the mechanical anti-theft locking system has been enabled ✻). The luggage compartment and the fuel filler cap remain locked.

To lock
Lock front passenger door and rear doors by pushing the interior lock button. Lock driver's door with key in lock. Turn key towards rear of vehicle as far as it will go, turn key to a vertical position and remove. The unlocked fuel filler cap and the luggage compartment cannot be locked.

Downloaded from www.Manualslib.com manuals search engine

Ofrecido por www.electromanuales.com

Luggage compartment

To unlock

Press button on radio remote control.

To open

The luggage compartment of the saloon is opened by pushing the button, and the luggage compartment of the estate is opened by pulling the catch beneath the handle.

Illumination of indicates the the luggage compartment is open.

For notes on open luggage compartment lid, paying attention to open tailgate – see page 73.

Electrically operated tailgate ✻ - see next page.

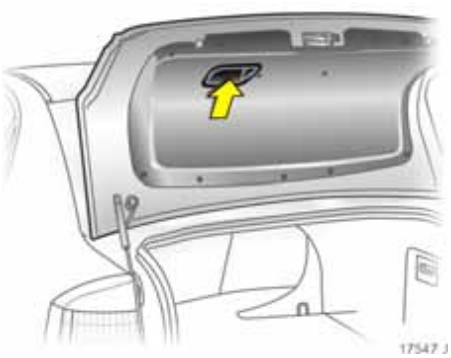

To close

There is a handle on the inside of the luggage compartment lid or tailgate for closing the luggage compartment.

With the estate, do not operate the catch beneath the handle when closing. Otherwise the luggage compartment will be unlocked again.

Downloaded from www.Manualslib.com manuals search engine

Ofrecido por www.electromanuales.com

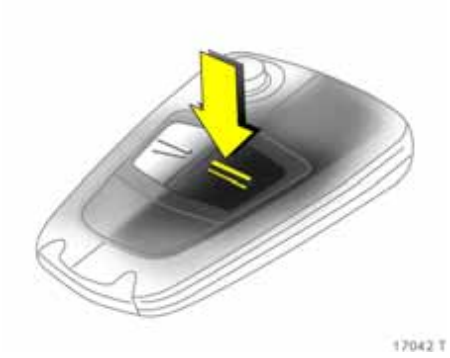

To lock
Press button ▬ on the radio remote control
– or –
Central locking switch in driver's door - press when doors are closed.

Electrically operated tailgate, estate ✻
In vehicle with an electrically operated tailgate the tailgate can be electrically opened and closed after unlocking.

⚠Warning

Make sure there is 2.03 m clearance before operating the electric tailgate. Observe the pivoting zone of the tailgate during operation and do not enter the pivoting zone.

To open
Unlock the vehicle by pressing button on the remote control. The tailgate is opened electrically by pulling the button beneath the handle.
– or –

Briefly press button of the remote control to unlock the tailgate (the doors remain locked). Pull the button under the handle to open the tailgate electrically
– or –
Hold button of the remote control depressed for more than 1 second (the doors remain locked)to electrically unlock and open the tailgate
– or –

►

Downloaded from www.Manualslib.com manuals search engine

Ofrecido por www.electromanuales.com

With the key in the ignition switch and the hand brake applied, hold button in the driver's door depressed for approx. 1 second. The tailgate opens electrically.

To close

Hold button on the remote control depressed until the tailgate is closed.

– or –

With the key in the ignition switch, press button in the driver's door until the tailgate is closed.

– or –

Press button in the tailgate. The tailgate closes electrically.

To lock, press button on the radio remote control.

Tailgate opening and closing is indicated by the rear turn signal lights flashing three times.

If the luggage compartment is not closed within 20 minutes of opening, the button in the tailgate is deactivated.

Downloaded from www.Manualslib.com manuals search engine

Ofrecido por www.electromanuales.com

Interruption of tailgate opening/closing procedure
Tailgate opening/closing can be immediately interrupted by briefly pressing button in the driver's door
– or –
Pressing button on the remote control
– or –
Pressing the exterior button beneath the handle
– or –
Pressing button in the tailgate.

The tailgate remains in this position for 10 second and then slowly reopens.

Safety function
The tailgate has an obstruction detection facility. If the tailgate encounters resistance during the automatic closing movement, the closing procedure is stopped immediately and the tailgate is slowly opened again.

Vehicles with towing equipment ❄: When towing a caravan or trailer, the tailgate cannot be operated using button on the remote control or button in the driver's door.

Fault in electrically operated tailgate
If the electronic drive should fail, the tailgate can be opended and closed manually, although more force is required to close the tailgate.

Opening the tailgate when the doors are locked via the central locking system
If the doors are locked via the central locking system, the tailgate can be opened by pressing the button on the remote control and pulling the catch beneath the handle.

Open boot lid, open tailgate

⚠Warning

Do not drive with the boot lid or tailgate open or ajar, e.g. when transporting bulky objects, since toxic exhaust gas could penetrate the interior.

Also, the number plate of the estate cannot be clearly read unless the luggage compartment is closed.

Fitting accessories to the boot lid or tailgate will increase its weight. If it becomes too heavy, the boot lid or tailgate will then not stay open.

Downloaded from www.Manualslib.com manuals search engine

Ofrecido por www.electromanuales.com

Vauxhall alarm system ✻

monitors

- the doors, luggage compartment, bonnet,
- the passenger compartment,
- vehicle tilt, e.g. if it is raised,
- the ignition.

⚠Warning

Do not use the system if there are people in the vehicle! The doors cannot be unlocked from the inside.

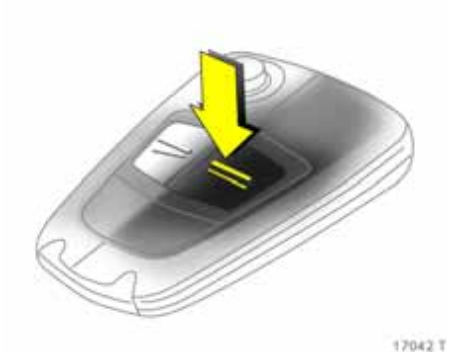

To activate

All doors, windows, the sun roof ✻ and the bonnet must be closed. Press button ═ on the radio remote control.

If the ignition was switched on, the driver's door must be opened and closed again so that the Vauxhall alarm system can be activated again.

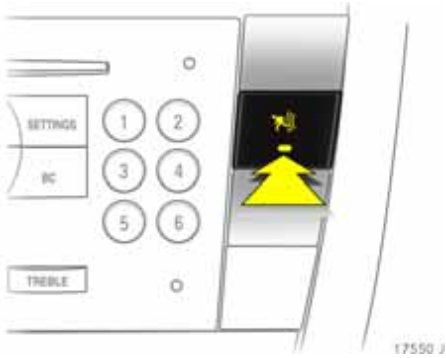

Activation without monitoring of passenger compartment and vehicle tilt

e.g. if animals are to be left in the vehicle.

1. Close tailgate and bonnet.
2. Press button, LED in button flashes (maximum of 10 seconds), see next page.
3. Close doors.
4. Switch on Vauxhall alarm system. LED illuminates. After approx. 10 seconds the system is activated, without monitoring of the passenger compartment or vehicle tilt. LED flashes until system is switched off.

Downloaded from www.Manualslib.com manuals search engine

Ofrecido por www.electromanuales.com

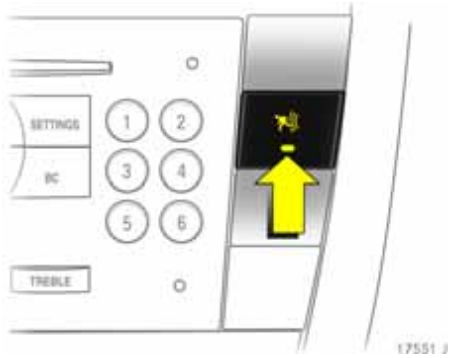

Light emitting diode (LED)
During the first 10 seconds of the Vauxhall alarm system activation:

- LED illuminated = Test, switch-on delay,
- LED flashes rapidly = Door, luggage compartment, or bonnet open, system fault,

After the first 10 seconds of the Vauxhall alarm system activation:

- LED flashes slow = System switched on,
- LED illuminates for approx. 1 second = Switch-off.

If a system fault occurs, consult a workshop. We recommend your Vauxhall Authorised Repairer.

To deactivate
Press button on the remote control
– or –
switch on the ignition.

If there is a fault in the radio remote control, unlock vehicle as described on page 69.

If the alarm is triggered when the driver's door is opened, deactivate the Vauxhall alarm system by switching on the ignition.

Downloaded from www.Manualslib.com manuals search engine

Ofrecido por www.electromanuales.com

Estate with electrically operated tailgate ❇::
To open and close the luggage compartment when the Vauxhall alarm system is active

1. Briefly press button ⊡ on the remote control – luggage compartment is unlocked (see page 70), and monitoring of the passenger compartment and vehicle tilt is disabled.
2. Opening luggage compartment – see page 70.
3. After the luggage compartment is closed, monitoring of the passenger compartment, luggage compartment and vehicle tilt is reactivated after a 5 minute delay and the tailgate is locked. To override the delay, press button ⚌ on the remote control.

Note
Changes to the vehicle interior, such as the use of seat covers, could impair the function of passenger compartment monitoring.

Alarm
An alarm can be triggered whilst the Vauxhall alarm system is active:
- an acoustic signal (horn) and
- a visual signal (hazard warning lights).

The number of alarms and the duration thereof are stipulated by law.

The alarm can be interrupted by pressing a button on the remote control or by switching on the ignition. Pressing button ⚌ or switching on the ignition will deactivate the Vauxhall alarm system at the same time.

Downloaded from www.Manualslib.com manuals search engine

Ofrecido por www.electromanuales.com

Child safety locks

⚠Warning

Use the child safety lock whenever children are occupying the rear seats. Disregard may lead to injuries or endanger life. Vehicle passengers should be informed accordingly.

Turn rotary knob at rear door lock from the vertical position using key: door cannot be opened from inside.

Universal radio remote control in mirror housing ❇

to operate up to 3 different remotely operated systems (e.g. garage door, domestic alarm system, domestic exterior lighting).

The programmed universal radio remote control can replace the individual remote control units of the systems to be operated. Three buttons on the underside of the mirror housing can be used to operate various systems.

Consult your Vauxhall Authorised Repairer for details on compatible systems.

⚠Warning

Ensure that no persons, animals or objects are in the movement zone of the system to be operated (e.g. a garage door). Vehicle passengers should be informed of the hazards.

Downloaded from www.Manualslib.com manuals search engine

Ofrecido por www.electromanuales.com

Basic programming of the universal radio control system

1. Switch on ignition.
2. When programming for the first time, press both outer buttons under the mirror housing, until the control indicator alongside the buttons flashes rapidly.
3. Hold the manual remote control unit at a distance of 0 to 30 cm from the control button area of the mirror housing.
4. Press the button on the manual remote control unit while pressing and holding the desired button of the universal radio remote control.
5. The control indicator in the mirror housing will flash slowly at first. As soon as it flashes rapidly, release both buttons. The universal radio control system is now programmed for the chosen system.
6. To program other buttons with other systems, repeat steps 3 to 5.

If a system cannot be operated after repeated programming, and the control indicator flashes rapidly for a short time after the relevant button has been pressed and then illuminates for 2 seconds, the receiver may be equipped with a variable code system, see next page.

Programming the universal radio control system for variable code systems

1. Perform basic programming – see previous column.
2. Activate synchronisation mode of system (see system manufacturer's system operating manual) and briefly press the pre-programmed button on the universal radio remote control three times within 30 seconds.
3. The radio control system is now programmed for variable code systems. To program other systems for variable codes, repeat steps 1 and 2 for the other buttons of the universal radio remote control system.

Downloaded from www.Manualslib.com manuals search engine

Ofrecido por www.electromanuales.com

Using the universal radio control system
With the ignition on, press the required universal radio control button, and the control indicator in the mirror housing will illuminate. The pre-programmed system can now be operated using the universal radio control system.

Reprogramming individual button settings
If a button that has already been programmed is to be used for a different system, repeat steps 3 to 5 of the basic programming procedure described previously.

Clearing down all programmed button settings
Before selling the vehicle, it is a good idea to erase button settings.

Button settings can only be erased all at once. It is not possible to erase individual button settings. Buttons can, however, be individually reprogrammed, see "Reprogramming individual button settings".

In order to erase the programming of all 3 buttons, press both outer buttons and release as soon as the LED begins to flash (after approx. 20 seconds). All button settings have now been cleared and can be programmed anew at any time.

Note
Keep replaced manual transmitters for possible reprogramming. The manual transmitters can also continue to be used.

If after repeatedly performing the above steps a system fails to respond to the universal radio control, consult a workshop. We recommend that you consult your Vauxhall Authorised Repairer.

During programming, the vehicle should be within the range of the receiver. Under no circumstances should the vehicle be in the movement zone of a system (e.g. garage door).

Do not programme an system without an automatic safety stop (manufactured before April 1982).

Take note of the system manufacturer's safety instructions for drives and manual remote control units.

Downloaded from www.Manualslib.com manuals search engine

Ofrecido por www.electromanuales.com

Bonnet

To open the bonnet, pull the release lever located on the driver's side below the instrument panel. The bonnet will then be unlocked and will partially open. Return release lever to its original position.

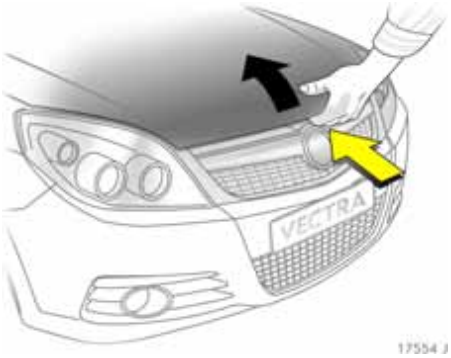

There is a safety catch on the underside of the bonnet: lift this upwards and open the bonnet.

When the bonnet is opened, snow or dirt on the bonnet can slide down and obstruct the air intake. Air intake – see page 168.

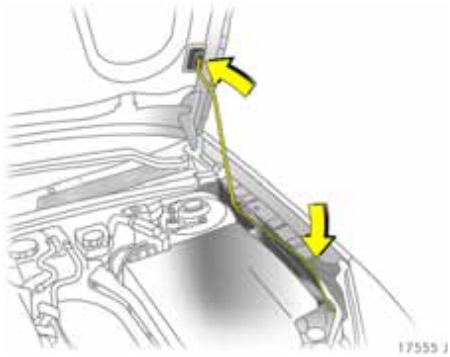

To hold the bonnet open, insert the support located on the left side in the small slot on the underside of the bonnet.

Before closing, fasten the support in its retainer. Lower the bonnet and allow it to fall into its catch.

Check that the bonnet is locked in position by pulling at its front edge. If it is not engaged, repeat the procedure.

Downloaded from www.Manualslib.com manuals search engine

Ofrecido por www.electromanuales.com

Seats, Interior

Head restraints 82
Armrest ✻ between the front seats 83
Rear seat armrest 84
Electrically adjustable front seats ✻ .. 84
Travel Assistant ✻ 87
Luggage compartment extension 94
Luggage compartment cover ✻..... 95
Safety net ✻, Estate..... 96
Lashing eyes 98
Reversible carpet ✻ 98
FlexOrganizer ✻..... 98
Notes on loading the vehicle..... 100
Cigarette lighter ✻..... 101
Accessory socket ✻..... 101
Ashtray 102
Stowage compartments..... 103
Drink holders 105
Sun visors..... 105

Front seat adjustment

See page 3.

Seat position

Adjust driver's seat such that with the driver sitting upright the steering wheel is held in the area of its upper spokes with the driver's arms slightly bent.

Push passenger seat as far back as possible.

The seat backrests must not be tilted too far back (recommended tilting angle approx. 25°).

⚠Warning

Failure to observe the descriptions could lead to injuries which could be fatal. Vehicle passengers should be informed accordingly before starting off.

Downloaded from www.Manualslib.com manuals search engine

Ofrecido por www.electromanuales.com

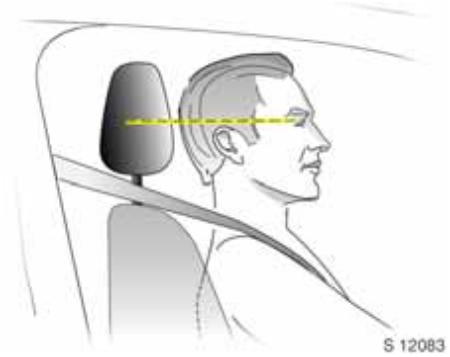

Head restraints

The middle of the head restraint should be at eye level. If this is not possible for extremely tall persons, set to highest position, and set to lowest position for small persons.

⚠Warning

Disregarding the instructions can lead to injuries which could be fatal. Vehicle passengers should be informed accordingly before setting off.

Setting – see page 6 and right hand column.

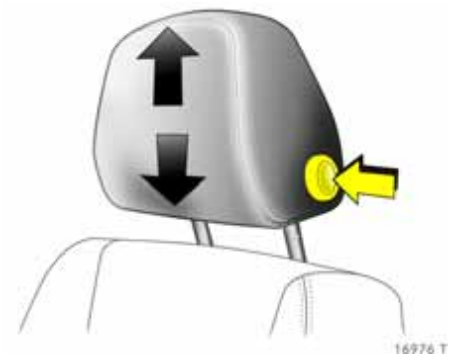

To adjust
front head restraints (all variants)
and outboard rear head restraints ✻
To adjust, press button on side and adjust height.

In order to increase the size of the luggage compartment or if they are not being used, push rear head restraints down as far as possible, see page 94.

If seats are occupied, pull head restraints upwards.

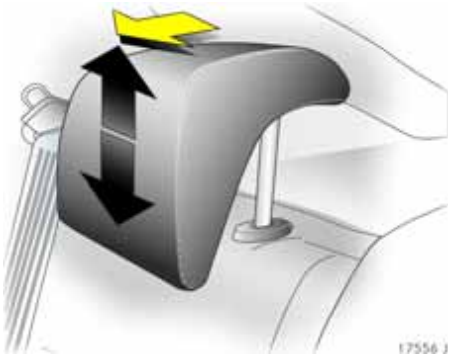

Adjusting the
rear head restraints ✻ that are
integrated in the rear seat backrest
To adjust head restraints, pull forwards with both hands and slide up or down.

To increase the size of the luggage compartment or improve visibility, push head restraint down as far as possible if seat is unoccupied.

If seat is occupied, pull head restraint upwards.

Downloaded from www.Manualslib.com manuals search engine

Ofrecido por www.electromanuales.com

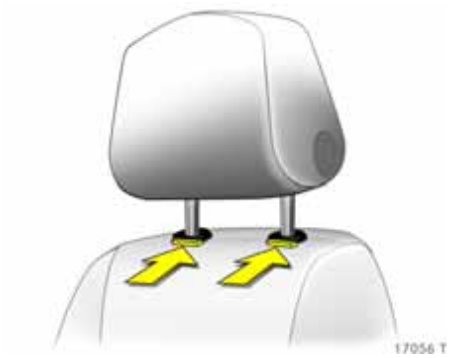

Removing the head restraints
Press and release the two catches. Pull and remove the head restraint.

In order to increase the size of the luggage compartment or if they are not being used, push rear head restraints down as far as possible, see page 94.

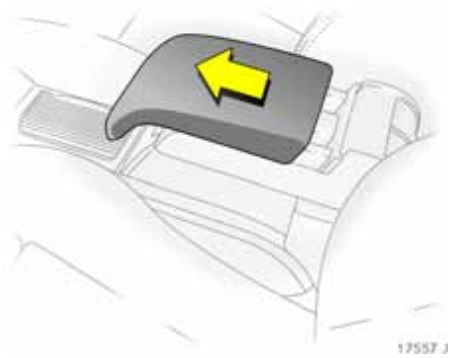

Armrest ✻ between the front seats

The armrest can be pushed forward. If the armrest is not required, push it back.

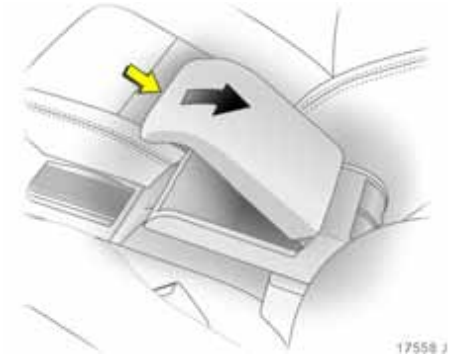

The armrest contains a stowage compartment: to open, slide armrest back, press button at front and lift.

Downloaded from www.Manualslib.com manuals search engine

Ofrecido por www.electromanuales.com

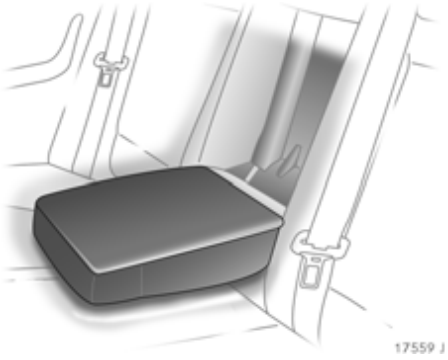

Rear seat armrest

The armrest can be folded down.

If the rear centre seat is being used or the rear seat backrests are being folded down, fold armrest upward.

Electrically adjustable front seats ❊

⚠Warning

Care must be taken when operating the electrically adjustable seats. There is a risk of injury, particularly for children, and a danger that articles could become trapped.

Keep a close watch on the seats when adjusting them.

Vehicle passengers should be informed accordingly.

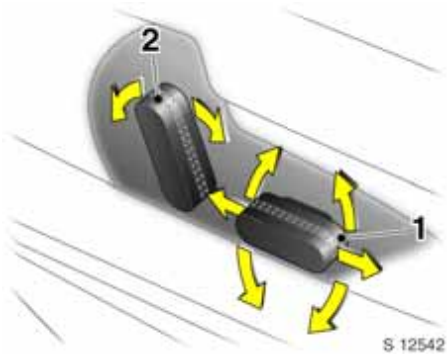

Adjustment

The seat position can be adjusted by means of switches on the outboard side of the seats.

Adjusting the inclination

move switch **1** upwards/downwards at front.

Downloaded from www.Manualslib.com manuals search engine

Ofrecido por www.electromanuales.com

Adjusting the longitudinal position
move switch **1** forwards/backwards.

Height adjustment
move switch **1** upwards/downwards at rear.

Seat back adjustment
turn switch **2** forwards/backwards.

Operate switch until desired seat position is reached. Seat position – see page 81.

After adjusting the seat, adjust height of seat belt – see page 109.

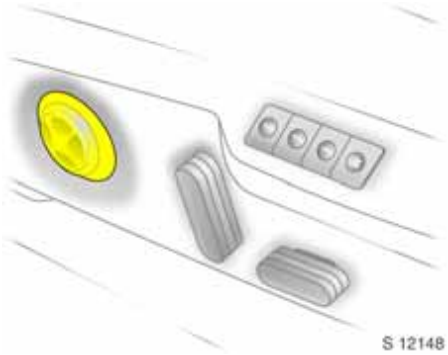

Electrically operated lumbar support ✻ on driver's seat
Adjust lumbar support using four-way switch on outboard side of driver's seat.

Adjust lumbar support to suit personal requirements.

Moving support up and down: push button up or down.

Increasing and decreasing support: push button forward or backward.

Thigh support ✻ on driver's seat
see page 4.

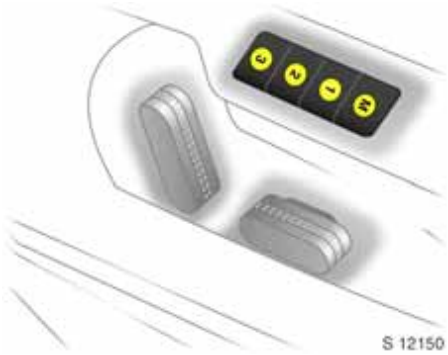

Memory function ✻ for electrically adjustable driver's seat and exterior mirrors
Three different seat and mirror settings can be stored (e.g. for three drivers).

►

Downloaded from www.Manualslib.com manuals search engine

Ofrecido por www.electromanuales.com

Readiness for operation

- With ignition on,
- within 10 minutes of switching ignition off,
- within 10 minutes of opening or closing the driver's door,
- within 10 minutes of inserting or removing the ignition key.

Readiness for operation stops when the vehicle is locked.

Storing settings

1. Adjust seat,
2. adjust exterior mirror – see page 6,
3. press memory button **M** and the position button to be used (**1**, **2** or **3**) simultaneously, and storage is acknowledged by an acoustic signal.

Retrieving settings

Keep position key **1**, **2** or **3** pressed until the stored seat and mirror positions have been reached.

For reasons of safety, seat adjustment stops immediately if the position button is released or one of the setting buttons is operated.

Adjustments may only be performed with vehicle stationary.

Store and activate the settings using the remote controls ❇

When the vehicle is locked using the radio remote control the current driver's seat and exterior mirror positions are stored, see page 64.

The seat adjusting procedure can be stopped immediately by operating a setting button.

Passenger side mirror with mirror parking assistance ❇

see page 6.

Overload

If the seat setting is electrically overloaded, the power supply is automatically cut off for a short time.

The system is protected by fuses in the fuse box – see page 246.

Downloaded from www.Manualslib.com manuals search engine

Ofrecido por www.electromanuales.com

Travel Assistant ✻

The Travel Assistant Contains

- Armrest
- Stowage compartments
- Waste container
- Drink holders
- Accessory sockets
- Connection console e.g. for DVD player ✻
- Electric cool box
- Tables
- Twin Audio (rear audio module) ✻ or stowage compartment

The Travel Assistant is installed on a console above the middle seat in the rear.

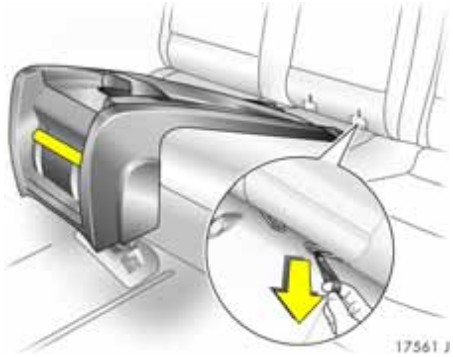

Installing The Travel Assistant
Swivel out retaining device on seat with strap.

Insert the two rear retainers of the connecting console in the retaining device on the seat and engage.

Swivel open and hold cover of front attachment points in floor in front of console.

►

Downloaded from www.Manualslib.com manuals search engine

Ofrecido por www.electromanuales.com

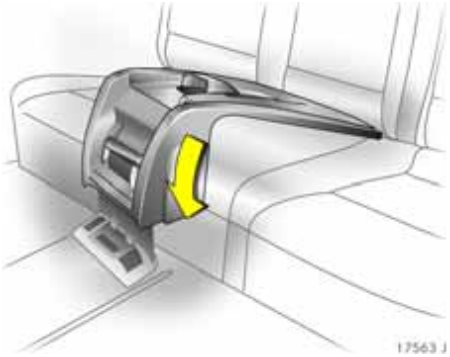

Swivel connecting console downward and engage in attachment points.

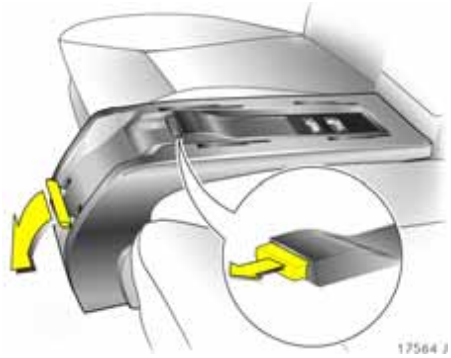

Swivel the locking lever downwards.

Check the locking position of the Travel Assistant: The red mark (see Fig. 17566 J) must not be visible. Otherwise, lock using the key – see page 92, Fig. 17575 J.

Remove cap ✻ from plug at securing bracket.

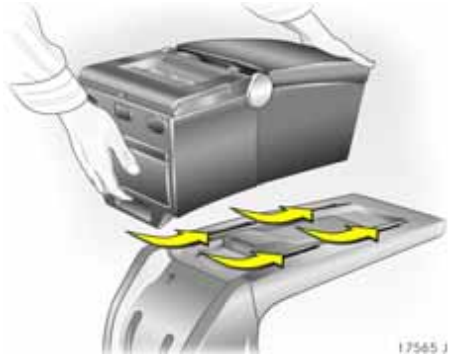

To lock, insert Travel Assistant into recesses in connecting console and slide back as far as possible.

Downloaded from www.Manualslib.com manuals search engine

Ofrecido por www.electromanuales.com

If it is correctly locked, the red mark must no longer be visible in the window, otherwise the procedure must be repeated.

⚠Warning

If it is not correctly locked, the Travel Assistant could be propelled forward with considerable force when hard braking occurs, risk of injury.

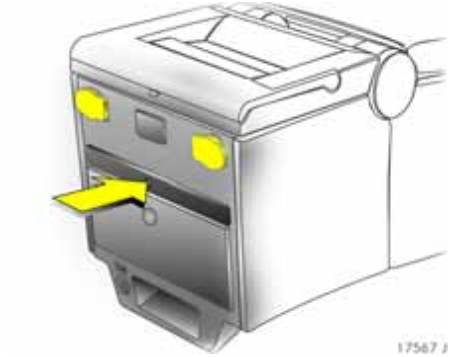

Drink holder and accessory sockets
Open the drink holder by pressing the marking.

Only accessories with maximum power consumption of 120 Watts must be connected to the accessory sockets. For notes – see page 101.

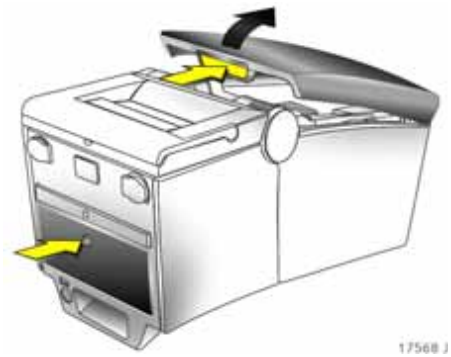

Stowage compartments
The lower stowage compartment is opened by pressing the mark. The underside of the compartment has an opening through which objects in the compartment can be raised.

The upper stowage compartment is located under the armrest. To open, press the button and fold the armrest upwards.

Downloaded from www.Manualslib.com manuals search engine

Ofrecido por www.electromanuales.com

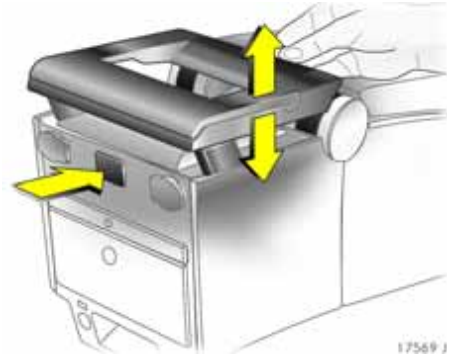

Connecting console for DVD player ✻
When not in use, pull connecting console upward, press button and slide downward.

Swivel up the display holder, slide DVD player display into bracket from below and fix in position with bracket.

Maximum load: 1 kg.

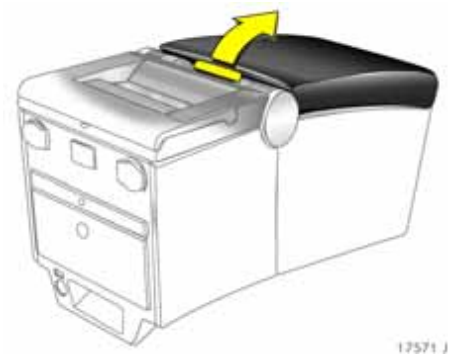

Electric cool box
To open, fold open the armrest together with the stowage compartment.

Downloaded from www.Manualslib.com manuals search engine

Ofrecido por www.electromanuales.com

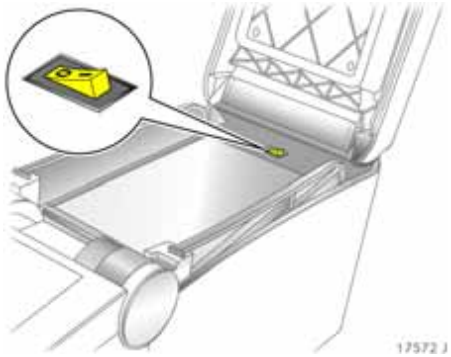

Switch on the cool box as needed.

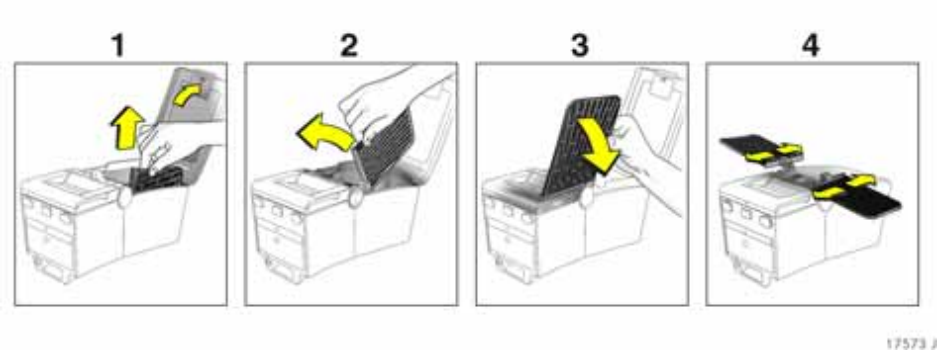

Tables
Fold armrest upward (**1**).

Use recessed grip to pull table upwards as far as it will go (**1**), swivel table forward (**2**) and fold downwards (**3**).

Set required clearance by adjusting longitudinal position of table (**4**).

Swivel armrest down.

►

Downloaded from www.Manualslib.com manuals search engine

Ofrecido por www.electromanuales.com

To fold away the table, swivel the armrest up.

Push the table forward as far as it will go (**1**).

Fold the table upwards past the resistance point (**2**), swivel it downwards and insert in the Travel Assistant (**3**).

Swivel armrest down.

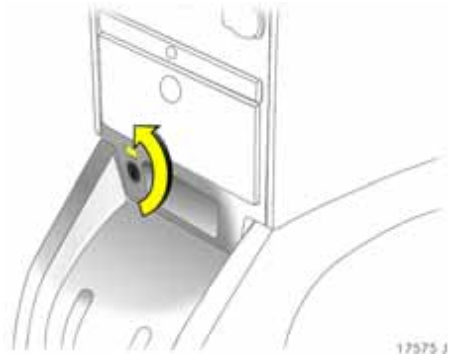

Dismantling the Travel Assistant
Open catch using key, red mark appears in window.

Downloaded from www.Manualslib.com manuals search engine

Ofrecido por www.electromanuales.com

Pull the Travel Assistant to the front on the connecting console and remove.

Fit cap ❇ to plug on securing bracket.

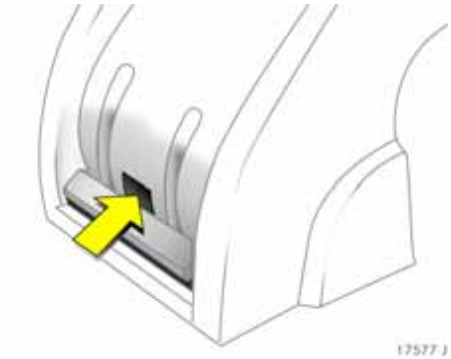

Press the locking lever down, press the button on the front of the connecting console and swivel the locking lever upwards.

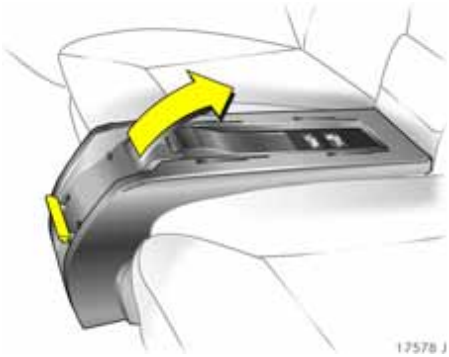

Swivel the connecting console upward and pull it from the retaining device on the seat.

Swivel the retaining device back on the seat.

Downloaded from www.Manualslib.com manuals search engine

Ofrecido por www.electromanuales.com

Luggage compartment extension

Fold down the cover behind the arm rest
Fold down the armrest on to the seat cushion, pull the handle and tilt the cover forwards.

The outer seats can continue to be used for passengers.

⚠Warning

The load must not obstruct the operation of the handbrake and the gears. Pay attention to notes on page 100.

Engage the cover behind the centre armrest audibly in position.

Cover behind armrest can be locked from luggage compartment ✻: turn handle 90°:

Locked	=	Handle horizontal
Unlocked	=	Handle vertical

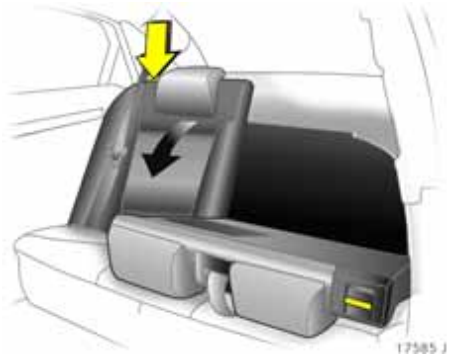

Folding down the rear seat backrests
Push the rear head restraints right down.

Place the belt buckles in storage pockets in the seat cushions.

Slide front seat forward slightly.

Remove Travel Assistant ✻ – see page 89.

Unlock one or both rear seat backrests by depressing pushbuttons and fold down on to seat cushion.

Return front seat to desired position.

Downloaded from www.Manualslib.com manuals search engine

Ofrecido por www.electromanuales.com

Restoring backrest to an upright position
Audibly engage the rear seat backrests. There is a locking indicator on the release lever. If the rear seat backrests have been correctly locked the red indicator on the release levers must not be visible.

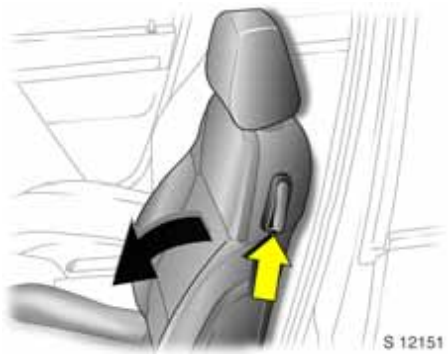

Folding down the front passenger seat ✻
Push head restraint on front passenger's seat down as far as it will go.

Slide front passenger seat backwards.

Fold front passenger seat forward by raising release lever.

To restore, press the release lever forward, restore the front seat backrest to an upright position and audibly engage.

Notes on loading
see page 100.

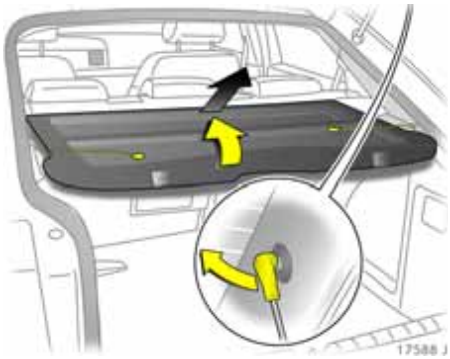

Luggage compartment cover ✻

5-door hatch
To remove, unhook the retaining straps from the tailgate.

Pull cover from the side guides.

Fit in reverse order.

Downloaded from www.Manualslib.com manuals search engine

Ofrecido por www.electromanuales.com

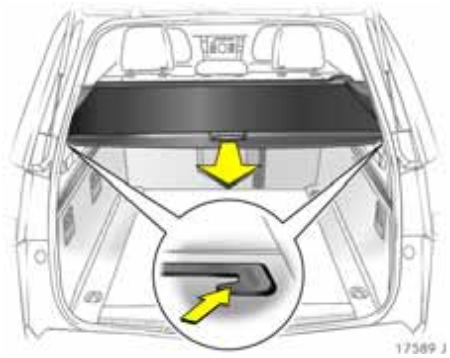

Estate

To close

Pull luggage compartment cover towards rear of vehicle using handle and hook into side retainers.

Do not place any heavy or sharp-edged objects on the cover.

To open

Remove luggage compartment cover from side brackets. It rolls up automatically.

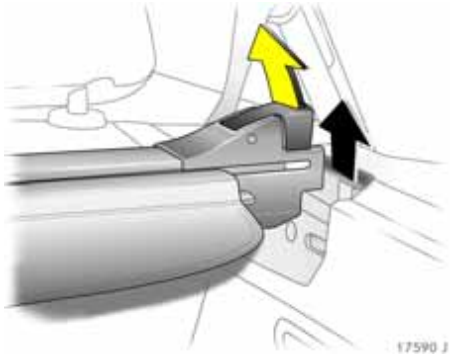

Removing

Open luggage compartment cover.

Move release lever on right side of luggage compartment cover upward. Lift right cover and remove from brackets.

Fitting

Fit the luggage compartment cover in the bracket on the left-hand side, fold up the release lever on the right-hand side, fit the luggage compartment cover in the bracket on the right-hand side and press the release lever closed.

Safety net ✻, Estate

The safety net can be fitted behind the rear seats or, with the rear seat backrests folded down, behind the front seats.

Passengers must not be carried behind the safety net.

Fitting behind the rear seats

Remove the luggage compartment cover - see left column.

Fit the cassette with rolled safety net into the side brackets and engage by twisting.

Downloaded from www.Manualslib.com manuals search engine

Ofrecido por www.electromanuales.com

Extend the net from the cassette. The roof frame houses two fitting openings. Fit the net rod in the fitting opening on one side and then the other and engage by pushing forward.

Fit the luggage compartment cover.

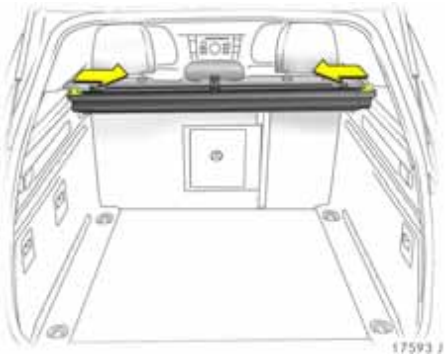

Removing
Remove the luggage compartment cover.

Detach the safety net rod from the brackets in the roof frame.

Slide both latches inwards; push the cassette with rolled net rearwards in the bracket, twist and remove upwards.

Fitting behind front seats
Fold both rear seat backrests. Place the rolled net on the floor behind the front seats in such a way that the cog rail in the slit on the net is to the rear.

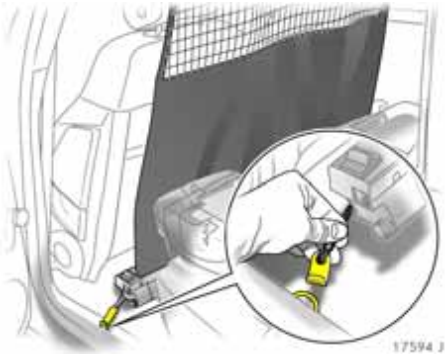

Pull each side hook from the cassette and attach it to an eye ✻ in the vehicle floor.

Extend the net from the cassette. The roof frame houses two fitting openings. Fit the net rod in the fitting opening on one side and then the other and engage by pushing forward.

Removing
Detach the safety net rod from the brackets in the roof frame.

Undo the side hooks from the eyes ✻ in the vehicle floor.

Downloaded from www.Manualslib.com manuals search engine

Ofrecido por www.electromanuales.com

Lashing eyes

These enable cargo to be secured in position in the luggage compartment using lashing straps ✻ or a luggage net ✻.

Reversible carpet ✻

Folding floor covering with two different surfaces. When transporting objects in the luggage compartment, fold reversible carpet with appropriate surface on top.

FlexOrganizer ✻

Flexible system for dividing the luggage compartment or securing loads in an estate.

The components are housed in a stowage compartment at the rear in the load floor, see page 104.

The system consists of
- variable partition net
- variable partition wall
- partition rod
- mesh pockets for the side walls
- hooks

The components can be mounted in the two guide rails in the side walls of the luggage compartment.

The figures show some possible uses.

Variable partition wall
Fig. 17596 J. Press the rods of the partition wall together slightly and engage in the desired guide rail openings in the side walls. The rods can be engaged in various positions.

Variable partition net
Fig. 17597 J. Push rods of partition net together a little and insert into relevant openings in side wall guide rails. The rods can be engaged in various positions. The partition net can be installed horizontally or vertically at different heights.

Downloaded from www.Manualslib.com manuals search engine

Ofrecido por www.electromanuales.com

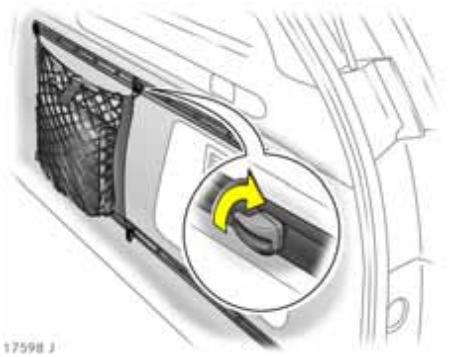

Hooks and mesh pockets for the side walls
Fig. 17598 J. Engage the hooks in the openings of the guide rails in the side walls as indicated in the figure and turn 90°. The mesh pockets can be hung from the hooks.

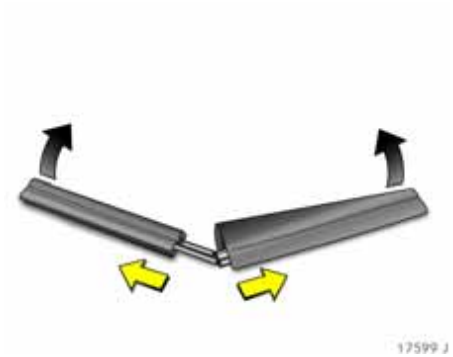

Removing
Press together the rods of the partition wall/net or the telescopic rods and remove from the guide rails. Turn the hooks 90° and remove.

FlexOrganizer stowage
The FlexOrganizer components are housed in a stowage compartment at the rear in the load floor. To open, raise the handle and open the flap – see page 104, Fig. 17611 J.

To stow away, pull partition rods, partition net rods and separate telescopic rod apart in the middle and fold the two halves together, see figure 17599 J. Roll up partition and partition net and place in compartment with other components. Close lid.

Downloaded from www.Manualslib.com manuals search engine

Ofrecido por www.electromanuales.com

Notes on loading the vehicle

- Heavy objects in the luggage compartment should be placed against the engaged rear seat backrests or, if the rear seat backrests are folded down, against the front seat backrests. If objects are to be stacked, the heavier objects should be placed at the bottom. Unsecured objects in the luggage compartment would be thrown forward with great force in the event of heavy braking, for example.
- Secure heavy objects with lashing straps ✻ attached to lashing eyes – see page 98. If heavy loads slip when the vehicle is braked heavily or driven around a bend, the handling of the vehicle may change.
- Saloon: loose objects in the luggage compartment should be secured against slipping using a luggage net ✻ – see page 98.
- Estate: mount the safety net ✻ when transporting objects in the luggage compartment. See page 96.
- Estate: close the luggage compartment cover so there is no reflection in the rear window.
- When transporting objects in the luggage compartment the rear seats must be engaged, see page 94.

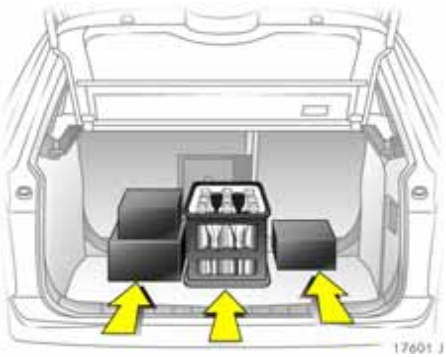

- Do not allow the load to protrude above the upper edge of the rear seat backrests, or above the upper edge of the front seat backrests if the rear seat backrests are folded down.
- The warning triangle ✻ and first-aid kit ✻ must always be freely accessible.
- Do not place any objects in front of the rear window or on the instrument panel. They are reflected in the glass, obstruct the driver's view and will be thrown through the vehicle, for instance in the event of heavy braking.
- Objects must not be stored in the airbag inflation area, because they could cause injury if the airbag inflates.
- The load must not obstruct the operation of the pedals, the handbrake or the gears or restrict the driver's freedom of movement. Do not place loose objects in the interior.
- Do not drive with luggage compartment open when transporting bulky objects, for example, since toxic exhaust fumes could penetrate the interior.
- Weights, payload and roof load – see page 293.
- Driving with a roof load – see pages 186, 189, 220, increases the sensitivity of the vehicle to cross-winds and has a detrimental effect on vehicle handling owing to the vehicle's higher centre of gravity.

⚠Warning

Failure to observe these descriptions can lead to injuries which may be fatal. Vehicle passengers should be informed accordingly.

Downloaded from www.Manualslib.com manuals search engine

Ofrecido por www.electromanuales.com

Cigarette lighter ✻

In front centre console.

Press in cigarette lighter with ignition switched on. Switches off automatically once the element is glowing. Pull out lighter.

Accessory socket ✻

The socket in the centre console and the cigarette lighter socket can be used to connect electrical accessories. The sockets are ready for operation when the ignition is switched on. If the engine is not running the battery will be discharged. An additional accessory socket ✻ can be found in the centre console beneath the rear air vents and in the Travel Assistant ✻.

Estates have an additional accessory socket ✻ to the left in the luggage compartment next to the luggage compartment lighting.

Do not damage the sockets by using unsuitable plugs.

The maximum power consumption of electrical accessories must not exceed 120 watts.

Do not connect any current-delivering accessories, e.g. electrical charging devices or batteries.

Electrical accessories connected to the socket must comply with the electromagnetic compatibility requirements laid down in DIN VDE 40 839, otherwise vehicle malfunctions may occur.

Accessory sockets in the Travel Assistant ✻, see page 89.

Downloaded from www.Manualslib.com manuals search engine

Ofrecido por www.electromanuales.com

Ashtray

To be used only for ash and not for combustible rubbish.

⚠Warning

Failure to observe these descriptions can lead to injuries which may be fatal. Vehicle passengers should be informed accordingly.

Ashtray, front

The cover opens when pressed at the point indicated.

To empty, grip both sides of the ashtray insert at the spots illustrated and pull upwards.

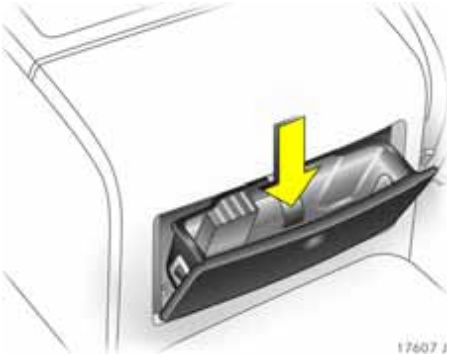

Rear ashtray ❇

In the rear centre console.

The cover opens when pressed at the point indicated.

To empty: open the ashtray, press the spring (arrow) and pull out the ashtray.

Downloaded from www.Manualslib.com manuals search engine

Ofrecido por www.electromanuales.com

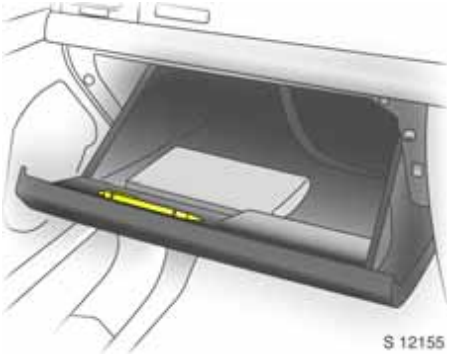

Stowage compartments

Glove compartment
To open, pull handle upwards.

At the front of the opened cover there is a pen holder.

Cooled glove compartment ✻
– see page 146.

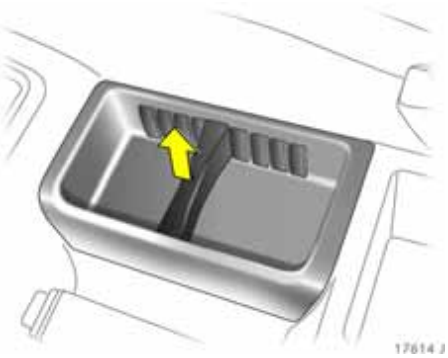

Centre console stowage compartment ✻
Division of the stowage compartment can be changed by moving the partition in the side guides.

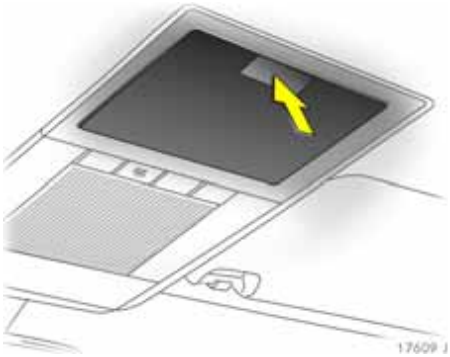

Stowage compartment in the roof lining ✻
To open, press the point indicated.

The maximum permitted load on the stowage compartment is 0.4 kg.

The stowage compartment must be closed whilst driving.

Downloaded from www.Manualslib.com manuals search engine

Ofrecido por www.electromanuales.com

Stowage compartments in the luggage compartment
To access press down bar and open the cover.

Warning triangle ⚠ ✻ and first-aid kit ⊕ ✻ stowage – see page 234. Stowing the spare wheel – see page 236. Jack and vehicle tools stowage – see page 238.

Estates have an additional stowage compartment in the load compartment floor.

To open, pull the release lever and open the flap.

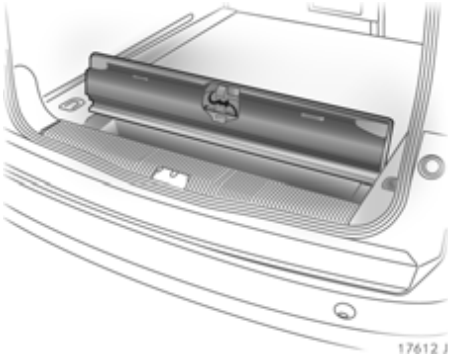

When opening, ensure that the hinge at the fold is opened and that the entire floor covering is not raised.

Downloaded from www.Manualslib.com manuals search engine

Ofrecido por www.electromanuales.com

Drink holders

Drink holders, front ✻
The drink holder can be found between the front seats in the centre console: slide cover ✻ open.

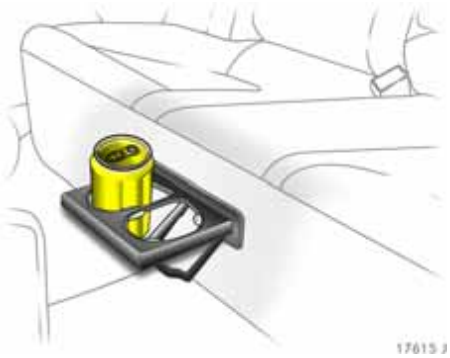

Drinks holders, rear ✻
The drink holder can be found beneath the centre seat: pressing front edge moves drink holder out.

Drink holder in Travel Assistant ✻
– see page 89.

Sun visors

Use the sun visor to protect from glare by pulling it down and swivelling it to the side.

Downloaded from www.Manualslib.com manuals search engine

Ofrecido por www.electromanuales.com

Safety systems

Seat belts 107
Three-point seat belts 107
Belt tensioners 107
Using the belts 109
Testing the belts 110
Vauxhall Full Size airbag system 111
Mounting brackets ✻ for ISOFIX child restraint systems 123
Child restraint systems ✻ 124
Exterior mirrors 126
Aspherical exterior mirror ✻ 126
Automatic anti-dazzle interior mirror ✻ and exterior mirror ✻ on the driver's side 126
Sun visors, glove compartment 126
Head restraints 127
Safety accessories ✻ 127

Three-stage safety system

Comprising:

- Three-point seat belts.
- Belt tensioners at the front seats.
- Airbag systems for driver, front passenger and outboard rear seats ✻.

The three stages are activated in sequence depending on the severity of the accident:

- The automatic seat belt locking devices prevent the belt strap from being pulled out and thus ensure that the vehicle occupants are retained in their seats.
- The front seat belt buckles are pulled downwards. As a result, the seat belts are instantaneously tightened and the occupants decelerate with the vehicle at a very early stage, which reduces the stress placed on the body.
- The airbag systems are also triggered in the event of serious accidents and form a safety cushion for the occupants. Depending on the severity of the accident, the front airbags inflate in two stages.

⚠Warning

The airbag systems serve to supplement the three-point seat belts and belt tensioners. The seat belts must therefore always be worn. Disregard of these instructions may lead to injuries or endanger life. Vehicle passengers should be informed accordingly.

Please read the instructions provided with the child restraint system!

Downloaded from www.Manualslib.com manuals search engine

Ofrecido por www.electromanuales.com

Seat belts

⚠Warning

Always wear your seat belt, and that means also in urban traffic and when you are a rear seat passenger. It can save your life!

Pregnant women must always wear a seat belt – see page 109.

In the event of an accident, persons not wearing seat belts endanger their fellow occupants and themselves.

Control indicator for the seat belt – see page 36.

Seat belts are only intended for one person. They are not suitable for anyone under 12 years of age or under 150 cm tall.

For children up to 12 years of age, we recommend the Vauxhall child restraint system – see page 124.

Three-point seat belts

The vehicle is equipped with three-point seat belts with automatic retractors and locking devices, allowing freedom of body movement although the spring tensioned belts always ensure a snug fit.

For information on correct seating position – see pages 81, 110, 113.

The belt has a "vehicle sensitive retractor" which is designed to lock during heavy acceleration or deceleration in any direction.

Belt tensioners

The front seat belt systems are equipped with belt tensioners. In the event of a head-on or rear-end collision of a certain severity, the belt buckles are pulled down, therefore tightening the belts.

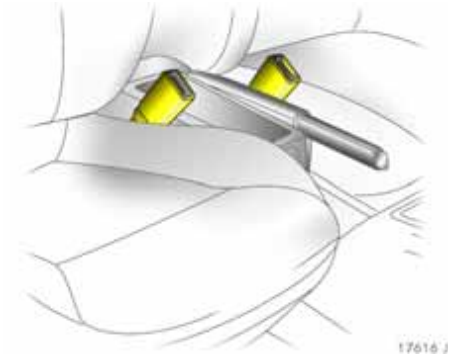

Actuation of belt tensioners
is indicated by illumination of control indicator , see next page.

The belt tensioners must be replaced after activation. We recommend that you consult your Vauxhall Authorised Repairer.

If the seat belts are undamaged the operation thereof is unaffected, even if the belt tensioners have been triggered.

Further information – see page 110.

Downloaded from www.Manualslib.com manuals search engine

Ofrecido por www.electromanuales.com

Control indicator for belt tensioners
The operation of the belt tensioners is electronically monitored together with the airbag systems and indicated on the instrument panel by the control indicator. When the ignition is switched on, the control indicator illuminates for approx. 4 seconds. If it does not illuminate, does not go off after 4 seconds or illuminates whilst driving, there is a fault in the belt tensioner system or the airbag systems, see page 117. The belt tensioner or the airbag systems may not activate if an accident occurs.

Deployment of the belt tensioners is indicated by continuous illumination of.

⚠Warning

Have the cause of the fault remedied. We recommend that you consult your Vauxhall Authorised Repairer.

The system's integrated self-diagnostics allows faults to be quickly remedied. Have your Car Pass on hand when consulting a Vauxhall Authorised Repairer.

If control indicator in the instrument panel fails, for reasons of safety, the text **AIrbAG** appears in the odometer display. Pressing the reset button will cause the text to disappear. It then reappears in the odometer display 10 seconds later.

Important

- Accessories and other objects not specifically approved for your vehicle type must not be affixed or placed within the action zone of the belt tensioners (near the belt buckles) as this could result in injury if the belt tensioners are triggered.
- Do not make any modifications to the components of the belt tensioners, as this will render the vehicle unroadworthy.

⚠Warning

Improper handling (e.g. removal or installation) can activate the belt tensioners risk of injury.

- The belt tensioner and airbag system control electronics can be found in the centre console area. In order to avoid malfunctions, do not store magnetic objects in this area.
- We recommend that you have the front seats removed by a Vauxhall Authorised Repairer.
- The belt tensioners only actuate once. Please replace belt tensioners that have been triggered. We recommend that you consult your Vauxhall Authorised Repairer.
- Applicable safety directives must always be observed when disposing of the vehicle. For this reason, disposal should be performed by an authorised recycling company. We recommend that you consult your Vauxhall Authorised Repairer.

Downloaded from www.Manualslib.com manuals search engine

Ofrecido por www.electromanuales.com

Using the belts

Fitting seat belts

Pull the belt out of the retractor and guide it across the body, making certain that it is not twisted.

Insert the latch plate into the buckle. The front seat backrest must not be tilted back too far or the seat belt will not operate properly. The recommended angle of inclination is 25°. Make sure that the lap belt is not twisted and that it fits snugly across the body. Tension the belt frequently while driving by tugging the diagonal part of the belt.

⚠Warning

On pregnant women in particular, the lap belt must be positioned as low as possible across the pelvis so as not to put too much pressure on the abdomen.

Bulky clothing prevents the belt from fitting properly. The belt must not rest against hard or fragile objects in the pockets of your clothing (e.g. ballpoint pens, keys, spectacles) because these could cause injury. Do not place any objects (e.g. handbags, mobile phones) between the belt and your body.

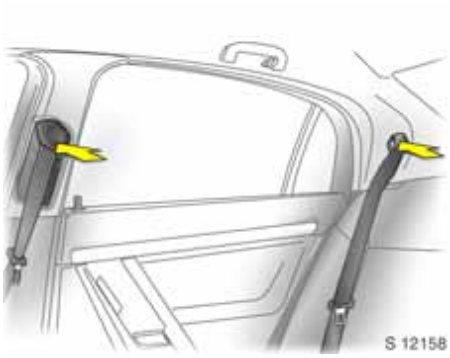

Height adjustment

of seat belt upper anchorage point:

1. Pull belt out slightly.
2. Front seat belts
   Push button down or slide belt guide up.
   Rear seat belts
   Push belt guide and slide it upwards or downwards.
3. Set desired height.
4. Allow belt guide to audibly engage.

Do not adjust height while driving.

►

Downloaded from www.Manualslib.com manuals search engine

Ofrecido por www.electromanuales.com

Adjust height such that the belt passes over the wearer's shoulder and rests against the shoulder. It must not pass over the neck or upper arm.

Removing the belt
To remove the belt, depress the red pushbutton on the buckle; the belt will retract automatically.

Testing the belts

Please check all parts of the belt system occasionally for damage and correct operation. Have damaged parts replaced. In case of an accident, please replace overstretched belts and triggered belt tensioners. We recommend that you consult your Vauxhall Authorised Repairer.

Do not perform any alterations on the belts, their anchorages, the automatic retractors or the belt buckles.

Make sure that belts are not damaged or trapped by sharp-edged objects.

Downloaded from www.Manualslib.com manuals search engine

Ofrecido por www.electromanuales.com

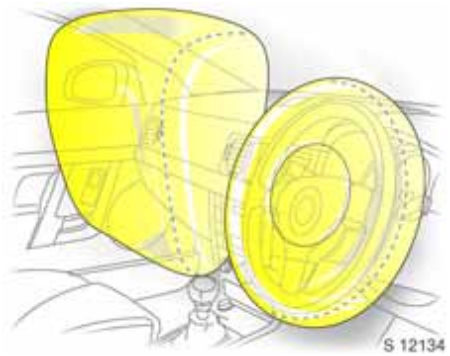

Vauxhall Full Size airbag system

The Vauxhall Full Size airbag system comprises several individual systems.

Front airbag system

The front airbag system will be triggered in the event of a serious accident involving a frontal impact and forms safety cushions for the driver and front passenger. The forward movement of the driver and front passenger is checked and the risk of injuries to the upper body and head thereby substantially reduced.

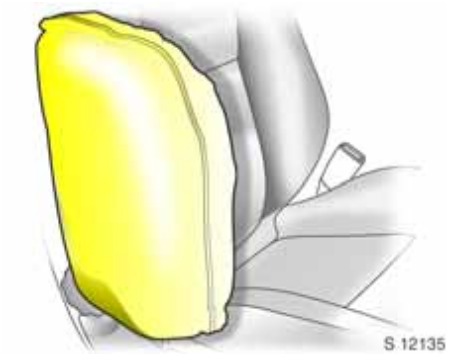

Side airbag system ✻

The side airbag is triggered in the event of a side-on collision to form a safety cushion for the driver or front passenger in the respective door area. This substantially reduces the risk of injury to the upper body and pelvis.

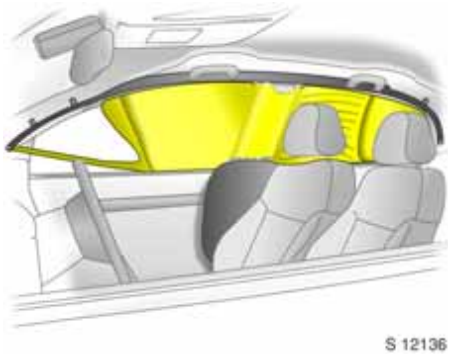

Curtain airbag system ✻

The curtain airbag system triggers in case of a side-on collision and provides a safety barrier in the head area on the respective side of the vehicle. This reduces the risk of injury to the head considerably in case of a side-on collision.

Downloaded from www.Manualslib.com manuals search engine

Ofrecido por www.electromanuales.com

Vauxhall Full Size airbag system

Front airbag

The front airbag system is identified by the word **AIRBAG** on the steering wheel and above the glove compartment.

The front airbag system comprises:

- an airbag with inflator in the steering wheel and a second one in the instrument panel,
- control electronics with impact sensors,
- the airbag systems control indicator in the instrument panel,

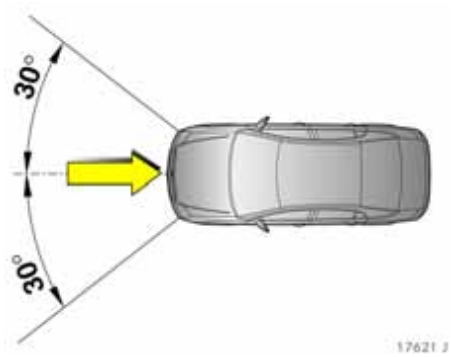

- seat occupancy recognition ✻,
- the control indicator for Vauxhall child restraint systems with transponders ✻ in the instrument panel.

The front airbag system will be triggered:

- depending on the severity of the accident,
- depending on the type of impact,
- within the range shown in the illustration,
- independent of side airbag and curtain airbag system ✻.

Exception:
Passenger seat with seat occupancy recognition system ✻. The seat occupancy recognition system deactivates the front and side airbags on the passenger side if the front passenger seat is unoccupied or a Vauxhall child restraint system with transponders ✻ has been fitted to the front passenger seat. Seat occupancy recognition – see page 118. Vauxhall child restraint system with transponders ✻ – see page 124.

Examples of events triggering the front airbag system:

- Impact against a non-yielding obstacle: the front airbags are triggered at low vehicle speed.
- Impact against a yielding obstacle: (such as another vehicle): the front airbags are only triggered at a higher vehicle speed.

Downloaded from www.Manualslib.com manuals search engine

Ofrecido por www.electromanuales.com

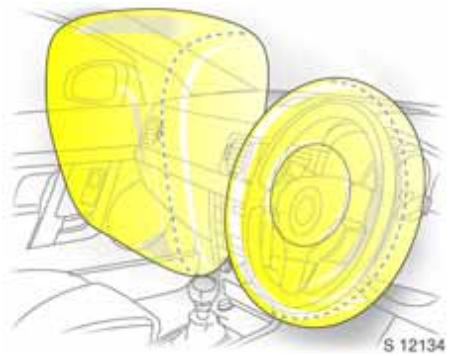

When triggered, the front airbags inflate in milliseconds to form a safety cushion for the driver and front passenger. The forward movement of the front seat occupants is checked, thereby substantially reducing the risk of injury to the upper body and head.

No impairment of view will occur, because the airbags inflate and deflate so quickly that it is often not even noticed in an accident.

⚠Warning

The front airbag system provides optimum protection when the seat, backrest and head restraint are correctly adjusted: Adjust the driver's seat according to the occupant's height such that with the driver sitting upright the steering wheel is held in the area of its upper spokes with the driver's arms slightly bent. The front passenger's seat should be as far back as possible, with the backrest upright – see pages 3, 81. Do not place the head, body, hands or feet on the covers of the airbag systems.

Do not place any objects in the area in which the airbags inflate. Important information – see page 120.

⚠Warning

The three-point seat belt must be correctly fitted – see page 109.

The front airbag system will not be triggered in the event of
- the ignition is switched off,
- minor frontal collisions,
- accidents in which the vehicle overturns,
- collisions involving a side or rear impact,

that is to say, if it would not be of benefit to the occupants.

►

Downloaded from www.Manualslib.com manuals search engine

Ofrecido por www.electromanuales.com

⚠Warning

Seat belts must therefore always be worn. The front airbag system serves to supplement the three-point seat belts. If you do not wear your seat belt you risk being seriously injured, or even thrown from the vehicle, in the event of an accident.

In the event of an accident the belt helps to keep you in the correct seating position, so that the front airbag system can provide you with effective protection.

In addition, the front airbag system will not be triggered for the front passenger in versions with seat occupancy recognition ✻ if

- the front passenger seat is unoccupied,
- there is a properly fitted Vauxhall child restraint system with transponders ✻. Seat occupancy recognition – see page 118. Vauxhall child restraint system with transponders ✻ – see page 124.

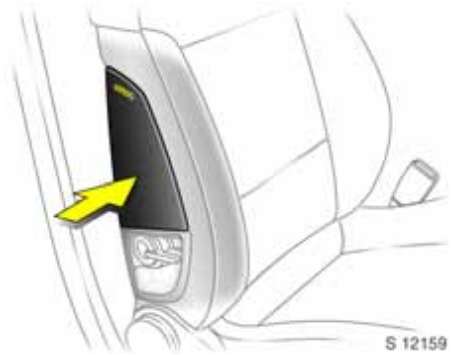

Side airbag ✻
The side airbag system is identified by the word **AIRBAG** on the outboard sides of the front seat backrests.

The side airbag system comprises:

- an airbag with inflator in the back of the driver's and front passenger seat respectively,
- the control electronics,
- the side impact sensors,
- the airbag systems control indicator in the instrument panel,
- seat occupancy recognition ✻,
- the control indicator for Vauxhall child restraint systems with transponders ✻ in the instrument panel.

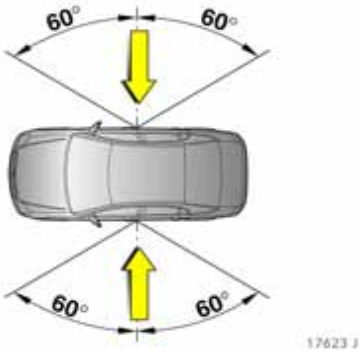

The side airbag system will be triggered:

- depending on the severity of the accident,
- depending on the type of impact,
- within the range shown in the illustration on the centre door pillar of the driver's or front passenger side,
- independently of the front airbag system.

Exception:
Passenger seat with seat occupancy recognition system ✻. The seat occupancy recognition system deactivates the passenger front and side airbags if the passenger seat is unoccupied or a Vauxhall child restraint system with transponders ✻ has been fitted to the passenger seat. Seat occupancy recognition – see page 118. Vauxhall child restraint system with transponders ✻ – see page 124.

Downloaded from www.Manualslib.com manuals search engine

Ofrecido por www.electromanuales.com

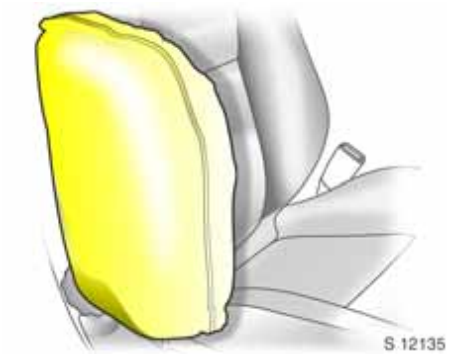

When triggered, the side airbag inflates within milliseconds to form a safety cushion for the driver or front passenger in the respective door area. This substantially reduces the risk of injury to the upper body and pelvis in the event of a side-on collision.

⚠Warning

There must be no objects in the area in which the airbag inflates or in the area between the backrests and the vehicle body. Do not place the hands or arms on the covers of the airbag systems. Important information – see page 120.

The three-point seat belt must always be correctly fitted – see page 109.

The side airbags will not be triggered in the event of

- the ignition is switched off,
- frontal collisions,
- accidents in which the vehicle overturns,
- collisions involving a rear impact,
- collisions involving a side impact outside the passenger cell.

In addition, the side airbag system will not be triggered for the front passenger in versions with seat occupancy recognition ✻ if

- the front passenger seat is unoccupied,
- there is a properly fitted Vauxhall child restraint system with transponders ✻. Seat occupancy recognition – see page 118. Vauxhall child restraint system with transponders ✻ – see page 124.

Downloaded from www.Manualslib.com manuals search engine

Ofrecido por www.electromanuales.com

Curtain airbag ✻
The curtain airbag system is identified by the word **AIRBAG** on the roof pillar trim.

The curtain airbag system comprises:

- an airbag with inflator in the roof frame on the driver's and front passenger side respectively,
- the control electronics,
- the side impact sensors,
- the airbag systems control indicator in the instrument panel.

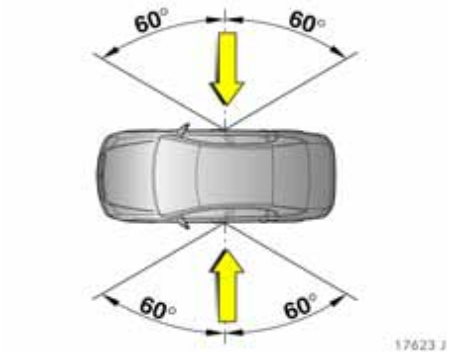

The curtain airbag system will be triggered:

- depending on the severity of the accident,
- depending on the type of impact,
- within the range shown in the illustration on the centre door pillar of the driver's or front passenger side,
- together with the side airbag system,
- irrespective of seat occupancy recognition,
- independently of the front airbag system.

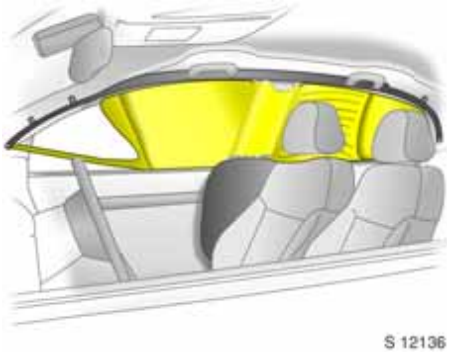

When the curtain airbag is triggered it inflates within milliseconds and provides a safety barrier in the head area on the respective side of the vehicle. This reduces the risk of injury to the head considerably in case of a side impact.

Downloaded from www.Manualslib.com manuals search engine

Ofrecido por www.electromanuales.com

⚠Warning

There must be no objects in the area in which the airbag inflates. Do not place the hands or arms on the covers of the airbag systems. Important information – see page 120.

The three-point seat belt must always be correctly fitted – see page 109.

The curtain airbags will not be triggered in the event of

- the ignition is switched off,
- frontal collisions,
- accidents in which the vehicle overturns,
- collisions involving a rear impact,
- collisions involving a side impact outside the passenger cell.

Control indicator for airbag systems
The operation of the airbag systems is electronically monitored together with the seat occupancy recognition systems ✻ and the belt tensioners and indicated on the instrument panel by the control indicator . When the ignition is switched on, the control indicator illuminates for approx.4 seconds. If it does not illuminate, does not go off after 4 seconds or illuminates whilst driving, there is a fault in the airbag systems, the seat occupancy recognition system ✻ or the belt tensioners, see page 108. The systems may not activate if an accident occurs.

Deployed airbags are indicated by continuous illumination of .

⚠Warning

Have the cause of the fault remedied. We recommend that you consult your Vauxhall Authorised Repairer.

The system's integrated self-diagnostics allows faults to be quickly remedied. Have your Car Pass on hand when consulting a Vauxhall Authorised Repairer.

If control indicator in the instrument panel fails, for reasons of safety, the text **AIrbAG** appears in the odometer display.

The text is acknowledged by pressing the reset button. It then disappears from the odometer display 10 seconds later.

Downloaded from www.Manualslib.com manuals search engine

Ofrecido por www.electromanuales.com

Seat occupancy recognition ✻
The seat occupancy recognition system deactivates the front and side airbags for the front passenger if the front passenger seat is not occupied or a Vauxhall child restraint system with transponders ✻ is fitted on the front passenger seat. The curtain airbag system ✻ remains activated.

The control indicator for seat occupancy recognition is located in the instrument panel. If control indicator illuminates for approx. 4 seconds when the ignition is switched on, the vehicle is equipped with seat occupancy recognition; see next page, Fig. 17626 J.

If a Vauxhall child restraint system with transponders ✻ is installed, the control indicator illuminates continuously as soon as the system has detected the child restraint system when the ignition is switched on. Only then can a child restraint system be used on the front passenger seat.

17625 J

Vehicles with seat occupancy recognition can also be identified by the sticker on the side of the instrument panel, see figure above.

Vauxhall child restraint systems with transponders ✻ are automatically detected if correctly fitted to the front passenger seat. When these child restraint systems are being used on the front passenger seat, the front and side airbag systems for the front passenger seat are deactivated. The curtain airbag system remains activated. Pay attention to control indicator seat for occupancy recognition ✻, see page 119.

⚠Warning

Only Vauxhall child restraint systems with transponders ✻ can be fitted on the front passenger seats. Use of systems without transponders poses a risk of fatal injury.

Vauxhall child restraint systems with transponders ✻ can be identified by a sticker.

Downloaded from www.Manualslib.com manuals search engine

Ofrecido por www.electromanuales.com

Control indicator for Vauxhall child restraint systems with transponders ✻

The presence of a Vauxhall child restraint system with transponders ✻ is indicated by the steady glow of control indicator in the instrument panel once the ignition has been switched on and the seat occupancy recognition system has detected the child restraint system.

If the control indicator does not illuminate whilst driving, the front and side airbag have not been deactivated on the passenger side. Risk of fatal injury to the child – fit child restraint system to rear seat. Have cause of fault remedied. We recommend that you consult your Vauxhall Authorised Repairer.

If the child restraint system is not correctly fitted or the transponders are defective the control indicator flashes. Check that child restraint system is correctly fitted. For fitting child restraint system with transponders ✻, see instructions provided with child restraint system.

If the control indicator flashes even though there is correctly installed child restraint system with transponders ✻, there is a fault and risk of injury to the child. Fit child restraint system to rear seat. Have the cause of the fault remedied. We recommend that you consult your Vauxhall Authorised Repairer.

If no Vauxhall child restraint system with transponders ✻ is installed, the control indicator must neither illuminate nor flash, since this indicates that the front passenger airbag systems would not be triggered. Have the cause of fault remedied. We recommend that you consult your Vauxhall Authorised Repairer.

⚠Warning

If the Vauxhall child restraint system with transponders ✻ has been fitted according to the instructions, the control indicator for Vauxhall restraint systems with transponders must illuminate in the instrument panel when the ignition is switched on.

If the control indicator does not illuminate whilst driving, the airbag systems have not been deactivated on the passenger side. Risk of fatal injury. In this case, fit child restraint system to rear seat. Have cause of fault remedied. We recommend that you consult your Vauxhall Authorised Repairer.

Downloaded from www.Manualslib.com manuals search engine

Ofrecido por www.electromanuales.com

Important

- Do not fit accessories or place objects in the expansion zone of the airbag systems - risk of injury if airbags are deployed.
- Do not place any objects between the airbag systems and the vehicle occupants; danger of injury.

⚠Warning

Never carry child restraint systems or other objects on your lap - risk of fatal injury.

- Use the hooks in the roof frame only to hang up light articles of clothing or coat hangers. Do not place any objects in the pockets of the hanging items – risk of injury.
- The airbag systems and belt tensioner control electronics can be found in the centre console area. In order to avoid malfunctions, do not store magnetic objects in this area.
- Do not stick anything on the steering wheel, instrument panel, front seat backrests or roof frame in the vicinity of the airbags, or on the front passenger seat cushion, or cover any of those areas with other materials.
- Use only a dry cloth or interior cleaner to clean the steering wheel, instrument panel, front seat backrests, roof frame and seat cushion of the front passenger seat. Do not use any aggressive cleaning agents.
- Only protective covers which are approved for your Vectra with side airbag may be fitted on the front seats. When fitting the protective covers, make sure that the airbag units on the outboard sides of the front seat backrests are not covered.
- The airbag systems are triggered independently of each other based on the severity of the accident and the type of impact. The side airbag system ✻ and the curtain airbag system ✻ are triggered together.
- Each airbag can be triggered only once. Once triggered, an airbag must be replaced without delay. We recommend that you consult your Vauxhall Authorised Repairer.
- The speeds, directions of movement and deformation properties of the vehicles, and the properties of the obstacle concerned, determine the severity of the accident and triggering of the airbags. The degree of damage to your vehicle and the resulting repair costs alone are not indicative that the criteria for triggering of the airbags were met.
- Do not perform any alterations on the components of the airbag system, as this would render the vehicle unroadworthy.

⚠Warning

The systems can be triggered abruptly and cause injury if they are handled improperly.

- We recommend having the steering wheel, the instrument panel, all panelling parts, the door seals, the handles and the seats removed by your Vauxhall Authorised Repairer.
- Applicable safety directives must always be observed when disposing of the vehicle. For this reason, disposal should be performed by an authorised recycling company. We recommend that you consult your Vauxhall Authorised Repairer.
- Persons weighing less than 35 kg should only travel on the rear seats. This does not apply to children who are travelling in child restraint systems with transponders ✻.

Downloaded from www.Manualslib.com manuals search engine

Ofrecido por www.electromanuales.com

- In vehicles with seat occupancy recognition ✻, do not place any heavy objects on the front passenger seat otherwise the airbag systems for the front passenger seat may be triggered in the event of an accident.
- In vehicles with seat occupancy recognition ✻, to prevent malfunctions do not use protective covers or seat cushions on the front passenger seat.
- In order to prevent malfunctions when using a Vauxhall child restraint system with transponders ✻ on the front passenger seat, no objects (e.g. plastic sheet, stickers or heated mats) may be placed under the child restraint system.

⚠Warning

Child restraint systems as well as other objects must never be carried on the lap of passengers; risk of fatal injury. If carried in this way, child restraint systems with transponders ✻ in vehicles with seat occupancy recognition ✻ could lead to front passenger airbag systems not being triggered in the event of an accident.

Use of child restraint systems ✻ on the front passenger seat in vehicles with airbag systems ✻, but without seat occupancy recognition ✻

⚠Warning

Vehicles with passenger airbag and no side airbag ✻: child seats facing the rear of the vehicle must not be fitted to the passenger seat, risk of fatal injury. Child seats facing the front (child safety seats for weight ranges I, II and III – see following pages) are permitted on the passenger seat, providing that it is pushed back as far as possible and the backrest has been adjusted so that the lap belt fits snugly.

Downloaded from www.Manualslib.com manuals search engine

Ofrecido por www.electromanuales.com

Vehicles with front passenger airbag can be recognised by the word **AIRBAG** above the glove compartment and the warning sticker on the sun visor of the passenger seat - see Fig. 17424 T. In some versions[1], the warning sticker may be on the side of the instrument panel - see Fig. 17118 T.

[1] Country-specific version.

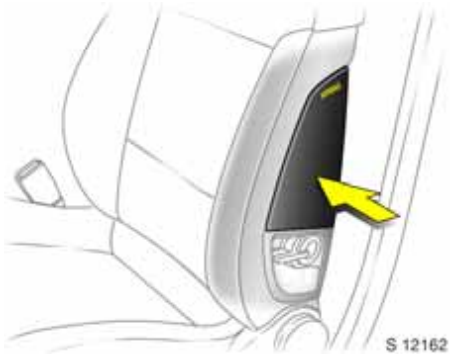

⚠Warning

Vehicles with side airbag ✻: No child restraint system ✻ may be fitted on the front passenger's seat; risk of fatal injury.

A vehicle with side airbags can be identified by the word **AIRBAG** on the outboard sides of the front seat backrests.

Seat occupancy recognition ✻
– see page 118.

Use of child restraint systems ✻ on front passenger seat in vehicles with airbag systems ✻ and with seat occupancy recognition ✻

⚠Warning

Only Vauxhall child restraint systems with transponders ✻ can be fitted on the front passenger seats. Use of systems without transponders poses a risk of fatal injury.

Downloaded from www.Manualslib.com manuals search engine

Ofrecido por www.electromanuales.com

Vehicles with seat occupancy recognition can be identified by the control indicator in the instrument panel. If the control indicator illuminates for approx. 4 seconds after the ignition is switched on, the vehicle is equipped with seat occupancy recognition – see page 118.

Vehicles with seat occupancy recognition can also be identified by the sticker on the side of the instrument panel, see Fig. 17625 J.

The seat occupancy recognition system detects Vauxhall child restraint systems with transponders ✻ and switches off the front and side airbag systems for the front passenger's seat. The curtain airbag system remains activated. Seat occupancy recognition – see page 118.

Vauxhall child restraint systems with transponders ✻ can be identified by a sticker or badge.

Mounting brackets ✻ for ISOFIX child restraint systems

The brackets located between the backrest and seat cushion are used for mounting ISOFIX child restraint systems.

Please follow the instructions accompanying the ISOFIX child restraint system.

Only ISOFIX child restraint systems approved for the vehicle may be used. We recommend that you consult your Vauxhall Authorised Repairer.

Downloaded from www.Manualslib.com manuals search engine

Ofrecido por www.electromanuales.com

Child restraint systems ✻

The Vauxhall child restraint system is designed specifically for your Vauxhall and thus provides optimum safety for your child in the event of impact. If a different child safety seat is used, follow the manufacturers' instructions for fitting and use.

The country in which you are travelling may not permit the use of child restraint systems on certain seats. Always comply with the local or national regulations.

Selecting the right system
Your child should be transported facing rearward in the car as long as possible. Change the system when the height of the child is such that the head extends over the top of the system and is no longer supported at eye level. The child's cervical vertebrae are still very weak. In the event of an accident, they are subjected to less stress in the semi-prone rearward position than when upright.

⚠Warning

Never carry child restraint systems on your lap, risk of fatal injury.

Permissible options for fitting a child safety seat[1)]

Weight and age class[2)]	On front passenger seat	On outboard rear seats	On centre rear seat
0: **up to 10 kg** or approx. 10 months **0+:** **up to 13 kg** or approx. 2 years	B[1], +	U, +	U
I: **9 to 18 kg** or approx. 8 months to 4 years	B[2], +	U, +	U
II: **15 to 25 kg** or approx. 3 to 7 years **III:** **22 to 36 kg** or approx. 6 to 12 years	X	U	U

1) For reasons of safety, we recommend that the child safety seat be installed on one of the outboard rear seats.
2) We recommend the use of each system until the child reaches the upper weight limit.

Downloaded from www.Manualslib.com manuals search engine

Ofrecido por www.electromanuales.com

B[1] = Limited, only with seat occupancy recognition and Vauxhall child restraint system with transponders.

If the child restraint system is being secured using a three-point seat belt, move seat height adjustment ✻ to uppermost position. Move front passenger seat as far back as possible and move front passenger seat belt anchorage point to lowest position.

B[2] = Limited, only with seat occupancy recognition and Vauxhall child restraint system with transponders.

If the child restraint system is being secured using a three-point seat belt, move seat height adjustment ✻ to uppermost position. Move front passenger seat as far back as possible so that vehicle safety belt runs from anchorage point towards the front.

U = Can be used universally in combination with a three-point seat belt.

\+ = Vehicle seat with ISOFIX mounting available. When mounting with ISOFIX, only ISOFIX child restraint systems that have been approved for the vehicle may be used. We recommend your Vauxhall Authorised Repairer.

X = No child restraint system permitted.

Note

- Children under 12 years or under 150 cm tall should only travel in an appropriate child safety seat.
- When transporting children, use the child restraint systems suitable for the child's weight.
- Ensure that the child restraint system has been correctly fitted, see instructions provided with child restraint system.
- The covers of the Vauxhall child restraint system can be wiped clean.
- Do not stick anything on the child restraint systems and do not cover them with any other materials.
- Only allow the child to enter and exit on the side of the vehicle facing away from the road.
- A child restraint system which has been subjected to stress in an accident must be replaced.

Downloaded from www.Manualslib.com manuals search engine

Ofrecido por www.electromanuales.com

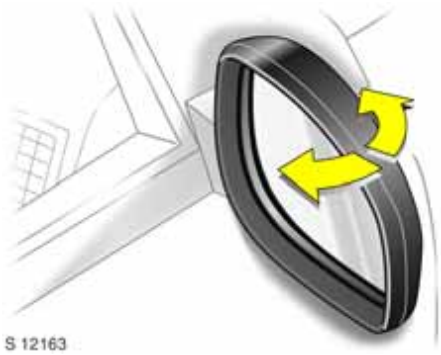

Exterior mirrors

For the safety of pedestrians, the exterior mirrors will swing out of their normal mounting position if they are bumped with sufficient force. Reposition the mirror by applying slight pressure to the mirror housing.

Aspherical exterior mirror ✻

increases the field of view. Estimating the distance away of vehicles following you is only possible to a limited extent because of slight distortion.

Automatic anti-dazzle interior mirror ✻ and exterior mirror ✻ on the driver's side

Dazzle at night is automatically reduced.

For vehicles with position memory for electrically operated front seats ✻ the sensor is in the top right-hand side of the mirror.

The mirrors do not dip to prevent dazzle if:

- the ignition is switched off,
- reverse gear is engaged or selector lever set to **R**,
- the interior lights are on,
- a door is open.

Adjusting interior and exterior mirrors – see page 6.

Automatically regulated centre console lighting, see page 134.

Sun visors, glove compartment

The mirror covers in the sun visors and the glove compartment should be closed whilst driving.

Downloaded from www.Manualslib.com manuals search engine

Ofrecido por www.electromanuales.com

Head restraints

Adjust head restraints in accordance with height ✻, see pages 5, 82.

Do not attach objects or components that are not approved for the Vectra to the head restraints. These affect the protective effect of the head restraints and can be propelled through the vehicle in an uncontrolled manner if the driver brakes hard or an accident occurs.

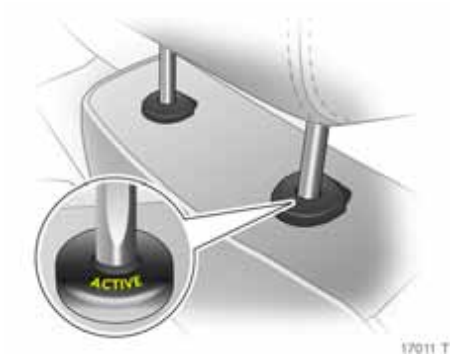

Active head restraints ✻
In the event of a rear-end impact, the active head restraints automatically tilt forwards. The head is more effectively supported by the head restraint and the danger of whiplash in the area of the neck is reduced.

Active head restraints are identified by the lettering **ACTIVE** on the head restraint guide sleeves.

Safety accessories ✻

The wide range of Vauxhall accessories allows you to equip your Vectra in accordance with your own wishes. In addition to safety accessories, items for improving comfort and a complete range of vehicle care products you will find many articles which will be of great value to you when needed.

"Genuine Vauxhall Parts and Accessories" are the guarantee of top quality and an accurate fit.

Your Vauxhall Authorised Repairer will be happy to advise you, for example with regard to:
- Vauxhall child restraint systems,
- Tow ropes,
- Tow rods,
- Jump leads,
- Spare bulb kit,
- Spare fuse kit,
- Halogen fog lights,
- Mud flaps,
- Warning triangle,
- First-aid kit,
- First-aid kit (cushion).

Downloaded from www.Manualslib.com manuals search engine

Ofrecido por www.electromanuales.com

Lighting

Automatic dipped beam activation ✻ 129
Fog lights ✻ 130
Fog tail light 130
Turn signals, hazard warning flashers 130
Reversing lights 130
Headlight range adjustment 129
Adaptive Forward Lighting ✻ (AFL) .. 131
Door-to-door illumination 132
Parking lights 132
Instrument illumination, Information display illumination 133
Courtesy light 133
Battery discharge protection 134
Light covers 134
Headlights when driving abroad 135

Exterior lights

Turn light switch:

0 = Off
= Parking lights
= Dipped beam, main beam

Dipped beam, main beam and headlight flash, see pages 14.

In positions and , the tail lights and number plate lights are also on.

If the ignition is switched off with the dipped beam or main beam on, the parking lights illuminate ✻ and the dipped beam switch off.

Versions with daytime running lights ✻: Parking lights are on when the ignition is switched on and the light switch is set to **0** or **AUTO**. Dipped beam is on when the engine is running.

The daytime running lights switch off when the ignition is switched off.

Follow the regulations of the country in which you are driving when using daytime running lights and fog lights ✻.

The rear lights of the estate automatically switch themselves off after 10 minutes if the luggage compartment is open and the vehicle is stationary.

Driving abroad – see page 135.

Downloaded from www.Manualslib.com manuals search engine

Ofrecido por www.electromanuales.com

Automatic dipped beam activation ✻

Light switch to **AUTO**: Dipped beam switches on or off automatically when the engine is running based on outside light conditions.

The exterior lights are turned off by removing the ignition key.

For reasons of safety, the light switch should always remain in the **AUTO** position.

Headlight range adjustment

Manual headlight range adjustment ✻

With dipped beam switched on, push to release knob and adjust headlight range in four steps to suit vehicle load. Turn wheel against resistance and click it to the required position.

Correct adjustment of the headlight range reduces dazzle for other road users.

Level control system – see page 206.

Vehicles without automatic level control

- Front seats occupied = 0
- All seats occupied = 1
- All seats occupied and luggage compartment load = 2
- Driver's seat occupied and luggage compartment load = 3

Vehicles with automatic level control ✻

- Front seats occupied = 0
- All seats occupied = 0
- All seats occupied and luggage compartment load = 0
- Driver's seat occupied and luggage compartment load = 1

Automatic headlight range adjustment ✻

On vehicles with Xenon headlights, the range of the headlights is adjusted automatically based on vehicle load.

Downloaded from www.Manualslib.com manuals search engine

Ofrecido por www.electromanuales.com

Fog lights ≢D ✻

On = Press ≢D, ≢D illuminates in instrument panel

Off = Press ≢D again or switch ignition or light off

The fog lights can only be switched on when both the ignition and lights are on.

Fog tail light ◐≡

On = Press ◐≡, ◐≡ illuminates in instrument panel

Off = Press ◐≡ again or switch ignition or light off

The fog tail light can only be switched on when the ignition is on and dipped beam or parking lights are on or if the light switch is in the **AUTO** ✻ position and dipped beam is active.

The fog tail lights of the vehicle are deactivated when towing a caravan/ trailer.

Turn signals, hazard warning flashers

see pages 14, 15.

Reversing lights

Come on when reverse gear is engaged and ignition is switched on.

Downloaded from www.Manualslib.com manuals search engine

Ofrecido por www.electromanuales.com

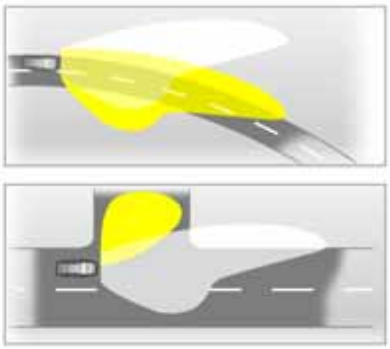

Adaptive Forward Lighting ✻ (AFL)

On vehicles with Bi-Xenon headlights, improves illumination of

- curves (curve lighting),
- intersections and tight turns (turn lighting).

Curve lighting 1
The Xenon light beam pivots based on steering wheel position and speed (from approx. 6 mph / 10 km/h).

The headlights shine at an angle of up to 15° to the right or left of the direction of travel.

Turn lighting 2
An additional light comes on at certain steering wheel settings (after approx. 90°), turn signal settings and speeds (up to approx. 25 mph / 40 km/h).

The light shines approx. 90° to the left or right of the vehicle and approx. 30 metres to the front.

Motorway lighting
At higher speeds and continuous straight ahead travel, the dipped beam automatically raises slightly, thereby increasing headlight range.

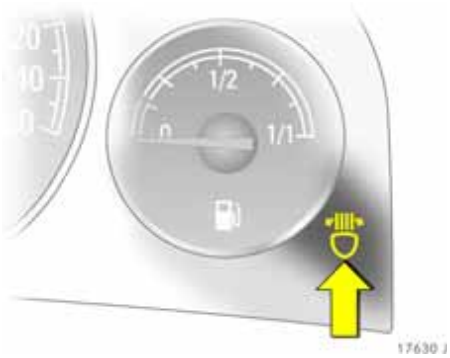

Control indicator
Lights: Fault in system. The system is not ready for operation.

If the curve lighting swivelling device fails, the relevant dipped beam is switched off. The corresponding fog light is automatically switched on for reasons of safety.

Consult a workshop. We recommend your Vauxhall Authorised Repairer.

If control indicator illuminates for approx. 4 seconds after the ignition is switched on, the headlights have been set to symmetrical dipped beam, see "Headlights when driving abroad", page 135.

Downloaded from www.Manualslib.com manuals search engine

Ofrecido por www.electromanuales.com

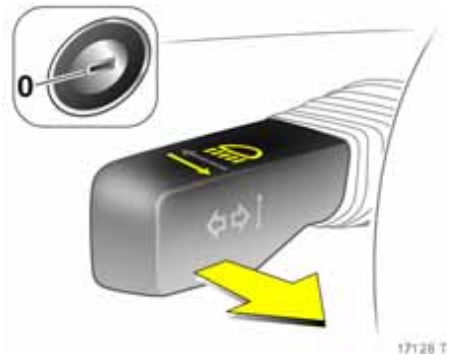

Door-to-door illumination

The dipped beam and the reversing lights illuminate for approx. 30 seconds after the driver has exited the vehicle and closed his door.

To activate function:

1. Switch off ignition.
2. Remove ignition key.
3. Open driver's door.
4. Pull turn signal stalk toward steering wheel.
5. Close driver's door.

If the driver's door is left open, the lights will go out after two minutes.

The light is switched off immediately by inserting the key into the ignition or pulling the turn signal stalk again with the driver's door open.

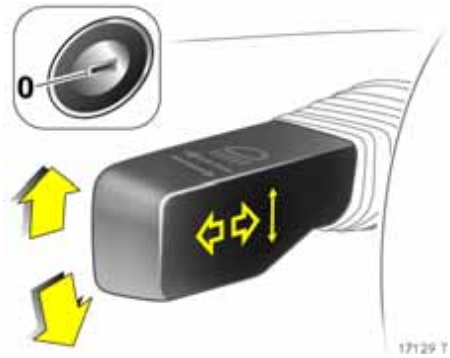

Parking lights

The front parking light and tail light of one side of the vehicle can be activated when parking:

1. Set light switch to **0** or **AUTO** ✻.
2. Ignition off.
3. Move turn signal stalk all the way up (right parking light) or down (left parking light).

An acoustic signal sounds and control indicator ⇦⇨ illuminates briefly in the instrument panel to indicate activation.

Remove the ignition key before leaving the vehicle.

To switch it off, switch on the ignition or move the turn signal stalk in the opposite direction.

Downloaded from www.Manualslib.com manuals search engine

Ofrecido por www.electromanuales.com

Instrument illumination, Information display illumination

Brightness can be adjusted when the exterior lights are on: Push to release knob and then turn it clockwise or anticlockwise and hold until the desired brightness is obtained.

Display mode ✻ – see page 54.

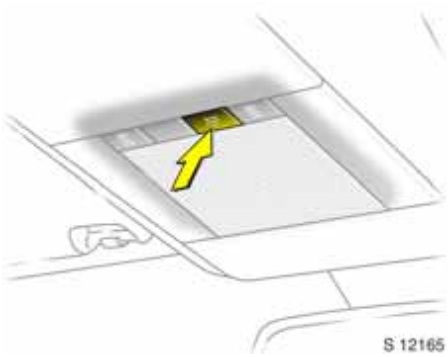

Courtesy light

Front courtesy light

Comes on automatically when the vehicle is unlocked using the remote control, when a door is opened or after switching off the ignition and removing the key from the ignition switch.

Goes off automatically with delay after the doors are closed or immediately when the ignition is switched on or the doors are locked.

Manual operation from inside with doors closed:

On = Press button
Off = Press button again

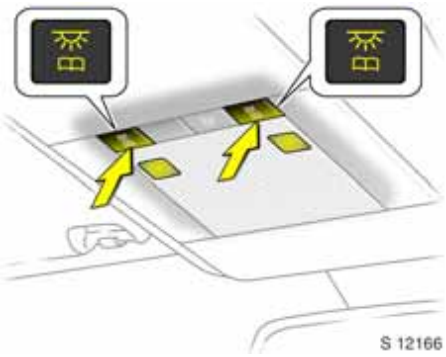

Front reading lights ✻

Left and right reading lights are individually operable. With ignition on:

On = Press button
Off = Press button again

Downloaded from www.Manualslib.com manuals search engine

Ofrecido por www.electromanuales.com

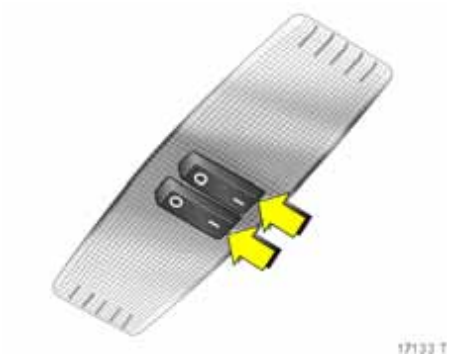

Courtesy lights and rear reading lights ✻
Centre switch position: The rear courtesy light comes on together with the front one when a door is opened.

The rear reading lights on the left and right can be switched on separately. With ignition on:

On = Switch position I
Off = Switch position 0

Entry lighting ✻
After unlocking the vehicle, the instrument and switch illumination as well as the courtesy lights come on for a few seconds.

Illuminated mirror in the sun visors ✻
The lighting switches on when the cover is opened.

Glove compartment lighting
Glove compartment is illuminated when lid is open and ignition on.

Cigarette lighter and ashtray illumination ✻
Comes on when ignition is switched on.

Luggage compartment lighting ✻
Comes on when the boot lid/tailgate is opened.

Automatically regulated centre console lighting ✻
Spotlight in housing of interior mirror.

Daylight-dependent, automatically regulated centre console lighting with ignition switched on.

Battery discharge protection

To prevent the battery from becoming discharged, the courtesy light, reading lights, luggage compartment lighting and glove compartment lighting switch off automatically 5 minutes after the ignition is switched off.

Light covers

The inside of the light covers may become misted up for a short period during unfavourable weather conditions, heavy rain or after washing the vehicle. The misting disappears automatically after a short time, but can be speeded up by switching the lights on.

Downloaded from www.Manualslib.com manuals search engine

Ofrecido por www.electromanuales.com

Headlights when driving abroad

The asymmetrical dipped beam increases the field of vision on the passenger side of the lane.

This causes glare for oncoming traffic if the vehicle is driven in countries where traffic drives on the opposite side of the road.

Do as follows to prevent glare:

Vehicles with halogen headlight system or xenon headlight system, without Adaptive Forward Lighting ✻ (AFL)

Have the headlights adjusted by a workshop. We recommend your Vauxhall Authorised Repairer.

Vehicles with Adaptive Forward Lighting ✻ (AFL)

1. Open fuse box cover in engine compartment, see page 250.
2. Insert any fuse (maxi-fuse) ✻ in slot 37. Fuse assignment – see page 251.
3. Close fuse box.
4. Switch on ignition.

Then the AFL control indicator illuminates for 4 seconds whenever the ignition is switched on.

Control indicator , see pages 38, 131.

Downloaded from www.Manualslib.com manuals search engine

Ofrecido por www.electromanuales.com

Windows, Sun Roof

Electric windows ✻..... 136
Windows in rear doors 138
Sun roof ✻ 139
Electrically operated rear window blind ✻ 141
Roller blinds at rear door windows ✻. 141

⚠Warning

Caution when operating the electric windows ✻ and the electric sun roof ✻. Risk of injury, particularly to children. Vehicle passengers should be informed accordingly.

If there are children on the rear seat, switch on the child safety system ✻ for the electric windows.

Keep a close watch on the windows and sun roof when closing them. Ensure that nothing becomes trapped in them as they move.

Electric windows ✻

The electric windows can be used

- with ignition on,
- within 10 minutes of switching ignition off,
- within 10 minutes of opening or closing the driver's door,
- within 10 minutes of inserting or removing the ignition key.

Readiness for operation stops when the vehicle is locked.

Downloaded from www.Manualslib.com manuals search engine

Ofrecido por www.electromanuales.com

Operation via 2 rocker buttons in the driver's door. Additional rocker buttons in the front passenger door and the rear doors ✻.

To operate window in stages, tap switch. For automatic opening or closing, keep switch pressed for slightly longer; to stop window movement, tap switch again.

Vehicles with rear ✻ electric windows have a slide switch between the buttons in the driver's door

- Up: The front windows can be operated using the buttons.
- Down: The rear windows can be operated using the buttons.

Safety function
If the window glass encounters resistance above the middle of the window during automatic closing, it is immediately stopped and the window opened again.

If the windows do not move easily (e.g. on account of frost), keep pressing the switch for the window in question until the window has been closed in stages.

Child safety system for rear windows ✻
Switch in the driver's door

- press (switch illuminates in red): rear windows cannot be operated using the buttons in the rear doors,
- press again (switch no longer illuminates in red): rear windows can be operated using the buttons in the rear doors.

Downloaded from www.Manualslib.com manuals search engine

Ofrecido por www.electromanuales.com

Automatic closing ✻
see page 69.

Overload
If the windows are repeatedly operated at short intervals, the power supply is briefly cut off.

The system is protected by fuses in the fuse box – see page 246.

Fault
The windows cannot be automatically opened or closed.

Activate electronic windows as follows:

1. Close doors.
2. Switch on ignition.
3. Window completely open.
4. Close window and press on button for at least 3 seconds.
5. Repeat for each window.

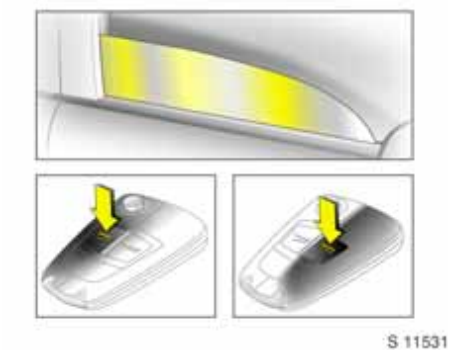

Operating windows from outside
The windows can be opened and closed using the radio remote control.

To open
Press button ⊜ until the windows are open.

To close
Press button ⊜ until the windows are closed.

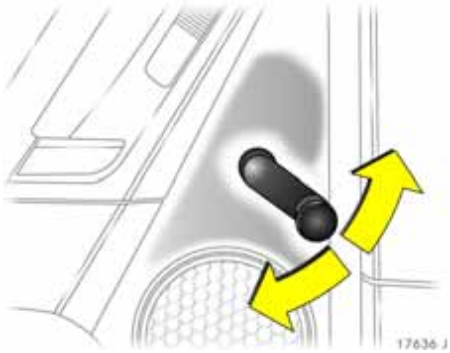

Windows in rear doors

Turn hand crank ✻ towards the front or rear.

Downloaded from www.Manualslib.com manuals search engine

Ofrecido por www.electromanuales.com

Sun roof ✻

The electric sun roof can be operated

- with ignition on,
- within 10 minutes of switching ignition off,
- within 10 minutes of opening or closing the driver's door,
- within 10 minutes of inserting or removing the ignition key.

Readiness for operation stops when the vehicle is locked.

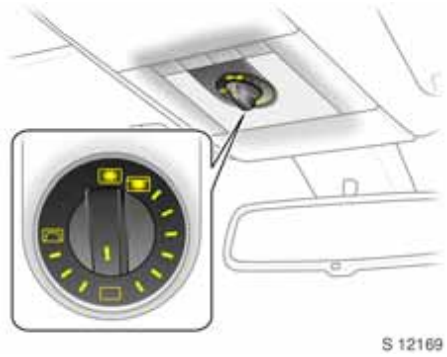

Operated using rotary switch in the overhead control panel.

To open
Turn the rotary switch to any position between ▭ and ▣. The sun roof will automatically move to the desired position. When the switch is in position ▣, the sun roof is fully opened.

Comfort position
Set rotary switch to position ▣. With the roof in this position, wind noise is reduced.

To close
Turn rotary switch to ▭.

To raise
Turn the rotary switch to any position between ▭ and ⧈. The sun roof will automatically move to the desired position. When the switch is in position ⧈, the sun roof is fully raised.

To lower
Turn rotary switch to ▭.

Position memory
After the ignition has been switched on, the sun roof can be automatically returned to its last position by briefly pressing the rotary switch.

Downloaded from www.Manualslib.com manuals search engine

Ofrecido por www.electromanuales.com

Safety function
If the sun roof encounters resistance during automatic closing, it is immediately stopped and opened again, as long as the vehicle is stationary.

⚠Warning

If when the vehicle is being driven the sun roof encounters resistance during automatic closing, because of the higher closing forces involved the protective function cannot be guaranteed, and there is a risk of injury.

If the sun roof movement is stiff, e.g. due to frost, turn rotary switch to ▭ and keep it pressed until the sun roof is closed.

Automatic closing ❇
see page 69.

Sun shade
To reduce the sunlight in the interior with the sliding roof closed or raised.

Open or close sun shade as required.

When the sun roof is opened, the sun shade is also opened.

17638 J

Closing sun roof from outside
To close the sun roof with the radio remote control: Press button ═ until the sun roof is closed.

If the windows are to be closed from outside the vehicle, but the sun roof is to be left open, briefly press the rotary switch before switching off the ignition.

Downloaded from www.Manualslib.com manuals search engine

Ofrecido por www.electromanuales.com

Overload
If the system is overloaded, the power supply is automatically cut off for a short time.

Fault
If the sun roof no longer assumes the desired position automatically, program sun roof electronics as follows:

1. Switch on ignition.
2. Press the rotary switch until the sun roof is shut, then keep it pressed for at least a further 3 seconds.
3. Turn rotary switch to ☀ and keep it depressed until the sun roof is open.
4. Turn rotary switch to ▢ and keep it depressed until the sun roof is closed.
5. Turn rotary switch to ▢ and leave there until the sun roof is fully raised.
6. Turn rotary switch to ▢ and keep it depressed until the sun roof is closed.

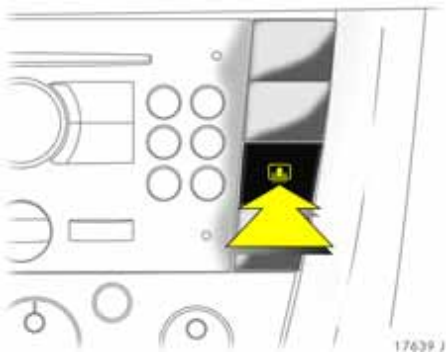

Electrically operated rear window blind ✻

Reduces intensity of sunlight shining on to rear seats. Operation with ignition switched on.

To raise = Press ⊞
To lower = Press ⊞ again

Do not operate blind if there are objects lying in front of the rear window.

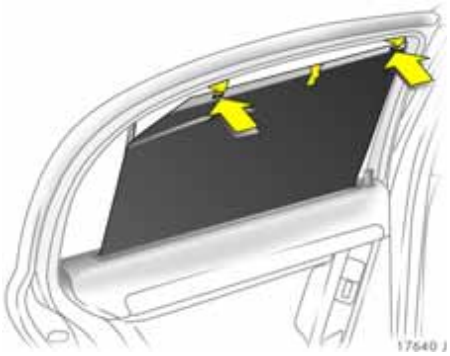

Roller blinds at rear door windows ✻

To reduce sunlight at the rear seats.

Pull the blind upwards using the grip and engage it at the top in the door frame.

Downloaded from www.Manualslib.com manuals search engine

Ofrecido por www.electromanuales.com

Climate control

Air vents 144
Heated rear window, heated exterior mirrors 145
Heated front seats ✻ 145
Heated rear seats ✻ 145
Driver's seat with climate control ✻ ... 146
Cooled glove compartment ✻ 146
Heating and ventilation system 147
Air conditioning system ✻ 150
Automatic air conditioning system ✻ 152
Electronic climate control system ✻ ... 158
Auxiliary heating/ventilation ✻ 165
Air intake 168
Air outlet 168
Pollen filter 168
General information 168
Maintenance 169

Heating and ventilation system, air conditioning system ✻

Ventilation, heating and cooling ✻ are combined into one unit that is designed to provide comfort regardless of the season, weather or outside temperature.

When cooling ✻ is activated, the air is cooled and dried.

The heating unit heats the air as required in all operating modes depending on the position of the temperature switch. The air supply can be adjusted to suit requirements by means of the fan.

Vehicles without an air conditioning system do not have buttons for cooling ✻, recirculation or demisting and defrosting.

Air conditioning system ✻ – see page 150.

Downloaded from www.Manualslib.com manuals search engine

Ofrecido por www.electromanuales.com

Automatic air conditioning system ✻

Provides a comfortable interior regardless of the weather, outside temperature or season.

When an interior temperature is set with the temperature control, the temperature and amount of inflowing air are automatically regulated. A uniform, comfortable climate in the vehicle is thereby automatically obtained based on outside climate conditions.

Automatic air conditioning system – see page 152.

Electronic climate control system ✻

Offers the greatest comfort in the vehicle interior regardless of the conditions outside.

To ensure a uniform and comfortable climate in the vehicle, the temperature of inflowing air, air-flow rate and air distribution are automatically adapted based on the climate conditions outside the vehicle and the current temperature of the vehicle interior.

The set values appear on the information display.

Electronic climate control system – see page 158.

Downloaded from www.Manualslib.com manuals search engine

Ofrecido por www.electromanuales.com

Air vents

Pleasant ventilation to the head area controlled by the position of the temperature switch.

To increase the air supply, set the fan to a higher speed and set the air distribution switch to ⁂.

Centre and side air vents (1)
To open vent: Turn vertical adjuster wheel up.

Adjust the direction of air flow by turning the horizontal and vertical adjuster wheels.

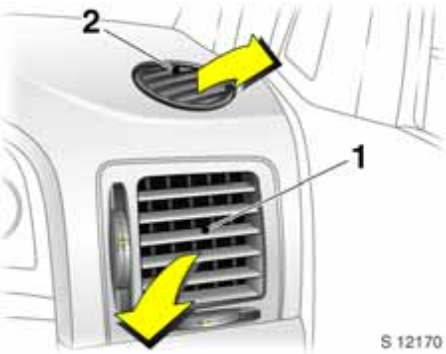

To close the vents turn the adjustment wheel fully downwards.

Windscreen defroster nozzles (2)
Air distribution switch to ⁂ or ⁂:
Air flows onto windscreen and side windows.

Additional vents
can be found beneath the windscreen and the side windows, and also in the footwell.

Rear air vents ✻
To open vent: Turn vertical adjuster wheel all the way up.

Adjust quantity of air by rotating the control wheel.

The air flow can be directed as desired by tilting and swivelling the slats.

To close the vents turn the adjustment wheel fully downwards.

If the rear seats are unoccupied close the rear nozzles to increase the air supply at the front.

Downloaded from www.Manualslib.com manuals search engine

Ofrecido por www.electromanuales.com

Heated rear window, heated exterior mirrors

Operation with ignition switched on:

On = Press
Off = Press again

Control indicator in the button.

Heating takes place with the engine running and is switched off automatically after approximately 15 minutes.

The heated rear window automatically switches on when the diesel particle filter is being cleaned ✻ depending on the engine.

Heated front seats ✻

Two knurled wheels beneath the centre air vent for the left and right-hand seats.

Turn relevant wheel to set required heating level.

Control indicator above adjustment wheel.

We do not recommend prolonged use of the highest level for people with sensitive skin.

To switch off, set wheel to **0**.

Heating only with ignition switched on.

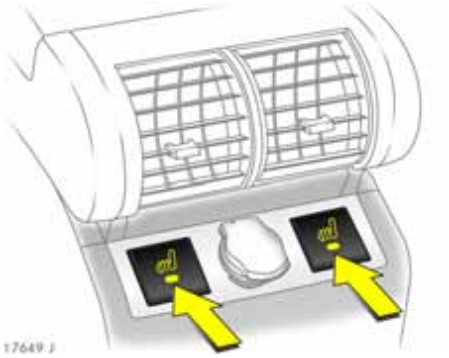

Heated rear seats ✻

Two switches at rear of centre console in front of the rear seats.

Operation with ignition switched on:

On = Press
Off = Press again

Control indicators in switches.

The outboard seats are heated.

Downloaded from www.Manualslib.com manuals search engine

Ofrecido por www.electromanuales.com

Driver's seat with climate control ✻

Knurled wheel at driver's side below centre air vents.

Move knurled wheel to required ventilation or heating setting as per requirements.

Control indicator above adjustment wheel.

We do not recommend prolonged use of the highest heating level for people with sensitive skin.

To switch off, set wheel to **0**.

Function only available with ignition switched on.

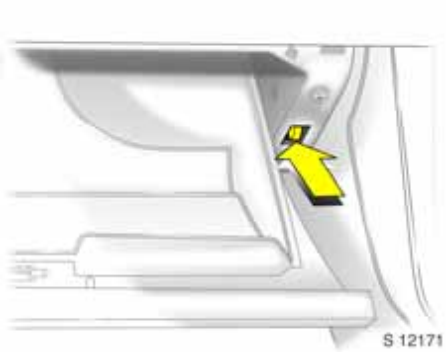

Cooled glove compartment ✻

Cooled air is fed into the glove compartment through a nozzle.

If glove compartment cooling is not needed, turn the wheel downwards.

General information, as well as information on air intake, air outlet, pollen filter and maintenance,

see pages 168, 169.

Downloaded from www.Manualslib.com manuals search engine

Ofrecido por www.electromanuales.com

Heating and ventilation system

Left-hand rotary switch: Air distribution

- to head area above adjustable air vents and to foot well
- to headroom via adjustable air vents
- to the windscreen and front door windows
- to the windscreen, front door windows, to foot well
- to foot well

Open the air vents when the switch is set to or .

Centre rotary switch: Temperature

red zone = warm
blue zone = cold

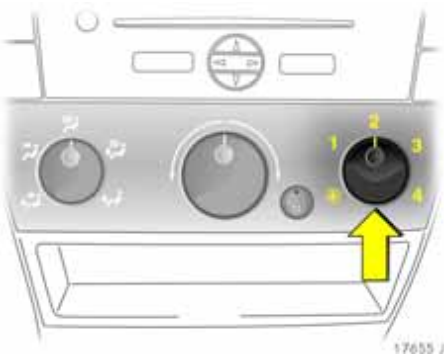

Right-hand rotary switch: air flow

Four fan speeds:

- Fan off
- **4** Highest speed

The rate of air flow is determined by the fan. The fan should therefore also be switched on during a journey.

Downloaded from www.Manualslib.com manuals search engine

Ofrecido por www.electromanuales.com

Ventilation

- For maximum ventilation in head area: set air distribution switch to and open all vents.
- For ventilation to foot well: Set air distribution switch to .
- For simultaneous ventilation to the head area and the foot well: set air distribution switch to .
- Set the temperature to the desired setting.
- Set the fan to the desired setting.

Heating

The amount of heat is dependent on the coolant temperature and is thus not fully attained until the engine is warm.

For rapid warming of the passenger compartment:

- Set the air distribution switch to the desired position – see page 147.
- Turn the temperature switch clockwise as far as it will go (warm).
- Set the fan to speed **3**.

The passenger compartment is heated more rapidly by an electric auxiliary heater in vehicles with Quickheat ❄.

The comfort and general well-being of the vehicle occupants are to a large extent dependent on a suitable ventilation and heating setting.

To obtain temperature stratification in the vehicle with a pleasant "cool head and warm feet" effect, move the rotary air distribution switch to or , move the rotary temperature switch to the central position and open the centre air vents.

Downloaded from www.Manualslib.com manuals search engine

Ofrecido por www.electromanuales.com

Heating the foot well

- Set air distribution switch to .
- Set the temperature switch in the red zone.
- Switch on fan.

Demisting and defrosting windows

⚠Warning

Disregard of the instructions could lead to misting or icing of the windows and subsequent accidents due to impaired visibility.

Misted or icy windows, such as in damp weather, from wet clothes or when outside temperatures are low:

- Move air distribution switch to .
- Turn the temperature switch clockwise as far as it will go (warm).
- Set the fan switch to **3** or **4**.
- Open side air vents as required and direct them towards door windows.
- Switch on heated rear window .

For simultaneous warming of the foot well, set air distribution switch to .

Downloaded from www.Manualslib.com manuals search engine

Ofrecido por www.electromanuales.com

Air conditioning system ❄

As a supplement to the heating and ventilation system, the air conditioning system cools and dehumidifies (dries) inflowing air.

If cooling or dehumidification is not desired, switch off cooling in order to save fuel.

Cooling switches off automatically at low outside temperatures.

Cooling

Operation only with engine running:

On = Press

Off = Press again

Control indicator in the button.

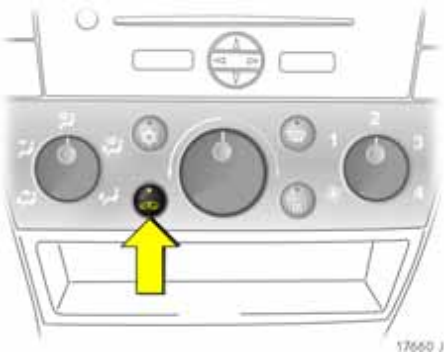

Air recirculation system

The recirculation switch is used to set the ventilation system in recirculation mode (control indicator in switch).

If fumes or unpleasant odours penetrate from outside: temporarily switch on air recirculation system .

Downloaded from www.Manualslib.com manuals search engine

Ofrecido por www.electromanuales.com

The switched-on air recirculation system reduces air replacement. The humidity increases and the windows may mist up. The quality of the interior air deteriorates over time, which may cause drowsiness.

Comfort setting

- Set cooling as desired.
- Air recirculation system off.
- Set air distribution switch to or .
- Set temperature switch as desired.
- Set fan switch to desired setting.
- Open vents as required.

Temperature switch in centre of adjustment range: warmer air will flow into the foot well and cooler air into the upper zone, with warmer air coming from the side air vents and cooler air from the centre vents.

Maximum cooling

Open windows and sun roof briefly so that warm air can escape rapidly.

- Cooling on.
- Set air distribution switch to .
- Turn the temperature switch anticlockwise as far as it will go (cold).
- Set fan switch to **4**.
- Open all vents.

The system will switch automatically to recirculation mode.

Downloaded from www.Manualslib.com manuals search engine

Ofrecido por www.electromanuales.com

Window demisting and de-icing

⚠Warning

Disregard of the instructions could lead to misting or icing of the windows and subsequent accidents due to impaired visibility.

Misted or icy windows, such as in damp weather, from wet clothes or when outside temperatures are low:

- Cooling ❄ on.
- Press button : The fan will automatically switch to **4**, air distribution directed on to the windscreen.
- Turn the temperature switch clockwise.
- Open side air vents as required and direct them towards door windows.
- Switch on heated rear window .

Operation with cooling (air conditioning compressor) is not possible when outside temperatures are low.

To switch off, press button again; the air conditioning will operate at the settings selected previously.

Automatic air conditioning system ❇

Provides a uniformly comfortable interior regardless of the weather, outside temperature or season.

To ensure a constant and comfortable climate in the vehicle, the temperature of the inflowing air and the air-flow rate are changed automatically based on climate conditions outside the vehicle.

Temperature changes due to external influences, such as direct sunlight, are automatically compensated.

Downloaded from www.Manualslib.com manuals search engine

Ofrecido por www.electromanuales.com

Automatic mode
Basic setting for maximum comfort:

- Set fan switch to **A**.
- Set air distribution switch to desired position – see next column.
- Use rotary switch to set temperature to 22 °C (a higher or lower temperature can be set as desired).
- Air conditioning compressor activation – see page 154.
- All front air vents open. If desired, the rear vents also ❄.

Deactivation of the air conditioning compressor can reduce the level of comfort and safety – see page 154.

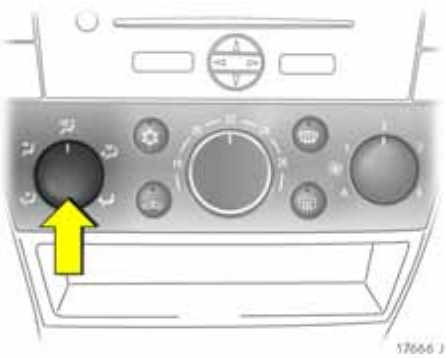

Air distribtion setting

- to head area above adjustable air vents and to foot well
- to headroom via adjustable air vents
- to the windscreen and front door windows
- to the windscreen, front door windows to foot well
- to foot well

Intermediate settings are possible.

Open the air vents when the switch is set to ⇄ or ⇄.

Temperature preset
Set the rotary switch to a value betwen 17 °C and 27 °C. Intermediate settings are possible.

The selected temperature is maintained.

For reasons of comfort, temperature can only be changed in small increments.

There is no temperature control for settings below 17 °C (all the way left) or above 27 °C (all the way right). The air conditioning system works at maximum cooling or heating.

Downloaded from www.Manualslib.com manuals search engine

Ofrecido por www.electromanuales.com

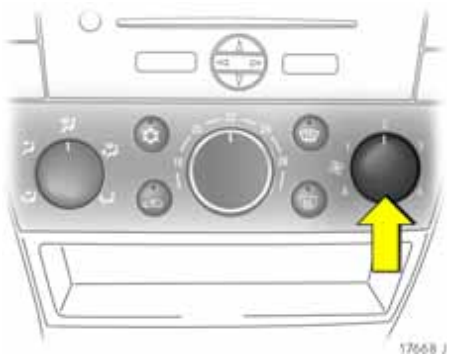

Air flow setting

1 - 4 Manual fan speed setting. Intermediate settings are possible.

A Automatic control of fan speed

✤ Fan off

The fan speed regulates the rate of air flow that is needed to maintain the pre-selected temperature.

Select automatic mode for the highest level of comfort.

When the fan is off, the air conditioning compressor is also off.

To activate/deactivate air conditioning compressor (cooling) ❄

Operation only with engine running:

On = Press ❄

Off = Press ❄ again

Control indicator in pushbutton.

When the cooling (air conditioning compressor) is active, the air is cooled and dehumidified. If cooling or dehumidification is not desired, switch off cooling in order to save fuel.

Cooling switches off automatically at low outside temperatures.

Downloaded from www.Manualslib.com manuals search engine

Ofrecido por www.electromanuales.com

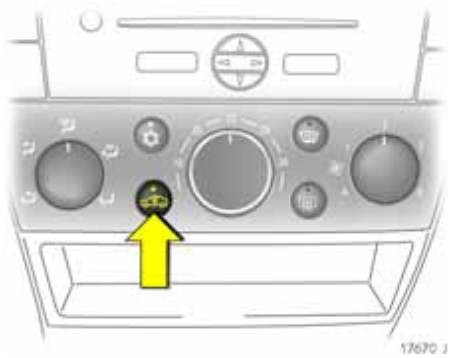

Manual air recirculation mode
The air recirculation system prevents the entry of outside air and the air in the passenger compartment is circulated.

Press button, control indicator in button.

The exchange of fresh air is reduced in air recirculation mode. The quality of the passenger compartment air deteriorates which may cause the vehicle occupants to feel drowsy. In operation without cooling the air humidity increases, so the windows may mist up. Consequently, manual air recirculation should only be run for short periods of time.

To deactivate manual air recirculation: Press button again. The control indicator in the button goes off.

Ventilation

- For maximum ventilation in head area: set air distribution switch to and open all vents,
- for ventilation to foot well: Set air distribution switch to ,
- for simultaneous ventilation to the head area and the foot well: set air distribution switch to ,
- set desired temperature,
- set fan switch to **A**. The fan can also be manually set: Set the rotary switch to position **1** - **4**. Intermediate settings are also possible.

Downloaded from www.Manualslib.com manuals search engine

Ofrecido por www.electromanuales.com

Heating
The amount of heat is dependent on the coolant temperature and is thus not fully attained until the engine is warm.

For rapid warming of the passenger compartment:

- Set the air distribution switch to the desired position – see page 147.
- Set the centre rotary switch to the desired temperature. We recommend a value of about 22 °C.
- Set fan switch to **A**. The fan can also be manually set: Set the rotary switch to position **1** - **4**. Intermediate settings are also possible.

The passenger compartment is heated more rapidly by an electric auxiliary heater in vehicles with Quickheat ✻.

The comfort and general well-being of the vehicle occupants are to a large extent dependent on a suitable ventilation and heating setting.

To obtain temperature stratification in the vehicle with a pleasant "cool head and warm feet" effect, move the rotary air distribution switch to ⇝ or ⇝, move the rotary temperature switch to approx. 22 ° and open the centre air vents.

Maximum cooling for very hot interior
Open windows and sun roof ✻ briefly so that warm air can escape rapidly.

- Cooling ❄ on.
- Set air distribution switch to ⇝.
- Set the temperature switch to the desired temperature.
- Set fan switch to **A**.
- Open all vents.

Downloaded from www.Manualslib.com manuals search engine

Ofrecido por www.electromanuales.com

The automatic climate control system provides maximum cooling down to the set value.

At settings below 17 °C (rotary switch all the way to the left), the system continually runs with maximum cooling. When the air conditioning compressor is running, the system is automatically set to air recirculation.

Demisting and defrosting the windows

⚠Warning

Disregard of the instructions could lead to misting or icing of the windows and subsequent accidents due to impaired visibility.

Misted or icy windows, such as in damp weather, from wet clothes or when outside temperatures are low:

- Cooling on.
- Press button : In switch position **A**, the fan automatically switches to the highest speed and air is directed to the windscreen.
- Set temperature to maximum heating, i.e. turn the centre rotary switch all the way to the right (28 °C).
- Switch on heated rear window .

Operation with cooling (air conditioning compressor) is not possible when outside temperatures are low.

To switch off, press button again; the automatic air conditioning system will operate at the settings selected previously.

Downloaded from www.Manualslib.com manuals search engine

Ofrecido por www.electromanuales.com

Electronic climate control system ✻

Provides a the greatest amount of comfort in the interior regardless of the weather, outside temperature or season.

To ensure a constant and comfortable climate in the vehicle, the temperature of the inflowing air, the air-flow rate and the air distribution are changed automatically according to climatic conditions outside the vehicle.

The air is automatically regulated in accordance with the settings personally selected for the driver and passenger sides.

Temperature changes due to external influences, such as direct sunlight, are automatically compensated.

Data is shown on the information display. Setting modifications are briefly shown in the information display, superimposing over the currently displayed menu.

The display can vary according to the type of presentation – see page 42.

The settings of the climate control system are automatically stored specifically for the vehicle key used. See page 64.

Different settings are stored for each remote control. Use of a remote control will activate the settings associated with it.

Manual settings e. g. operating without cooling and air distribution can be selected using the menu – see page 160.

When cooling (air conditioning compressor) is active, air is cooled and dehumidified.

The pollen filter removes dust, soot, pollen and spores from the inflowing outside air.

The automatic air recirculation system ✻ has an air quality sensor ✻ to detect harmful ambient gases, in which case it will switch automatically to recirculation.

When set to automatic mode, the climate control system provides the optimal settings for almost all conditions. If necessary, climate control system settings can be modified manually.

The climate control system is only operational when the engine is running.

Cooling (air conditioning compressor) switches off automatically at low outside temperatures.

Downloaded from www.Manualslib.com manuals search engine

Ofrecido por www.electromanuales.com

Automatic mode
Basic setting for maximum comfort:

- Press **AUTO** button.
- All front air vents open. If desired, the rear vents also ✻.
- Air conditioning compressor activation – see page 162.
- Individually set temperature for the driver's and passenger side to 22 °C using the outer knobs.

The temperature can be set higher or lower as desired.

Different temperatures can be set for the driver and passenger sides.

Switching off the air conditioning compressor (**Eco** appears in the display) can have a detrimental effect on comfort and safety, see page 162.

All air vents (except the rear air vents ✻) are controlled automatically in automatic mode. The front air vents should therefore always be open.

Automatic air recirculation system ✻
The ventilation system is set to recirculation mode and interior air is recirculated.

The automatic air recirculation system has an air quality sensor to detect harmful gases in the outside air, in which case it will switch automatically to recirculation.

At low outside temperatures and with the cooling (air conditioning compressor) switched off, automatic recirculation operation will be disabled. This prevents the windows from misting up. Switch manually to air recirculation as necessary.

Activating/deactivating automatic air recirculation system – see page 163.

Manual recirculation mode – see page 164.

Downloaded from www.Manualslib.com manuals search engine

Ofrecido por www.electromanuales.com

Temperature preset
Using the outer knobs, temperatures can be individually set to values between 16 °C and 28 °C.

For reasons of comfort, temperature can only be changed in small increments.

The passenger compartment is heated more rapidly by an electric auxiliary heater in vehicles with Quickheat ✻.

If a temperature below 16 °C is set, **Lo** appears in the display: the climate control system runs constantly at maximum cooling power. The temperature is not regulated.

If a temperature above 28 °C is set, **Hi** appears in the display: the climate control system runs constantly at maximum heating power. The temperature is not regulated.

Temperature settings are stored when the ignition is switched off.

Common temperature setting
Press the knob for the driver's side. The temperature for both the driver and passenger side together can be set using the knob on the driver's side.

Individual temperature settings
Press the knob for the passenger side. Temperatures can be set independently of each other using the knobs for the driver and passenger sides.

The temperature on both the driver and passenger side are shown in the display.

For reasons of comfort, the temperatures cannot differ by more than 2 °C.

Manual settings
Under certain circumstances (e.g. iced or misted windows), the functions of the climate control system can be modified manually.

Climate control system settings can be changed via the centre knob, the buttons and the menus depicted on the display.

Press the centre knob to call up the menu. The menu for manual climate control system settings appears in the display.

Downloaded from www.Manualslib.com manuals search engine

Ofrecido por www.electromanuales.com

The individual menu items are marked by rotating the centre knob and selected by pressing it. Selecting certain menus by pressing the knob will open a submenu.

To exit a menu, turn the centre knob left or right to **Return** or **Main** and select.

Manual settings are stored when the ignition is switched off.

Window demisting and de-icing

⚠Warning

Failure to follow the instructions could lead to misted or icy windows and accidents stemming from impaired visibility.

Misted or icy windows, such as in damp weather, from wet clothes or when outside temperatures are low:

Press button, control indicator in button.

Temperature and air distribution settings are made automatically, the fan runs at a high speed (fan speed is indicated on the display) and the windows are quickly cleared of moisture and ice.

The air flow can be increased or decreased by turning the central knob.

To return to automatic mode: press button or **AUTO**.

Heated rear window, see page 145.
Auxiliary heating ✻, see page 165.

Downloaded from www.Manualslib.com manuals search engine

Ofrecido por www.electromanuales.com

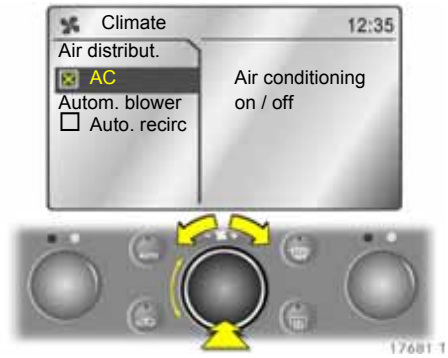

Activating and deactivating air conditioning compressor
If no cooling or dehumidification is required, switch the air conditioning compressor off (maximum energy savings): Mark menu item **AC** from the manual settings menu and select by pressing. **Eco** appears on the display.

Inflowing air is neither cooled nor dehumidified. This restricts the level of comfort provided by the electronic climate control system. This may cause the windows to mist up, for example.

To activate cooling: Select menu item **AC** from the manual settings menu and press to activate cooling.

Air distribution
Select menu item **Air distribut.** from the manual settings menu.

Make the desired settings in the **Air distribut.** menu:

Up	Air distribution to windscreen and front side windows
Centre	Air to vehicle occupants via front adjustable air vents
Down	Air distribution to foot well

Return to automatic air distribution: deactivate relevant setting or press button **AUTO**.

Downloaded from www.Manualslib.com manuals search engine

Ofrecido por www.electromanuales.com

Air flow
Turn the centre rotary knob clockwise or anticlockwise (if no menu for manual settings is displayed). The selected fan level is indicated by ✤ and numbers in the display.

At speed **0** both the fan and cooling (air conditioning compressor) are switched off.

To return to automatic mode: Press **AUTO** button.

Fan control in automatic mode ✻
Fan regulation in automatic mode can be modified.

Select menu item **Automatic blower** from the manual settings menu and select the desired fan control.

Depending on the setting, the maximum air flow, and thereby the noise level, will increase.

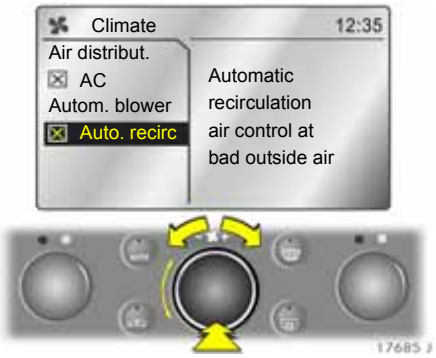

Switching automatic recirculation ✻ on or off
The automatic air recirculation system has an air quality sensor to detect harmful gases in the outside air, in which case it will switch automatically to recirculation.

Select menu item **Auto. recirc** from the manual settings menu and switch it on or off by pressing.

Switch to manual air recirculation as necessary.

Downloaded from www.Manualslib.com manuals search engine

Ofrecido por www.electromanuales.com

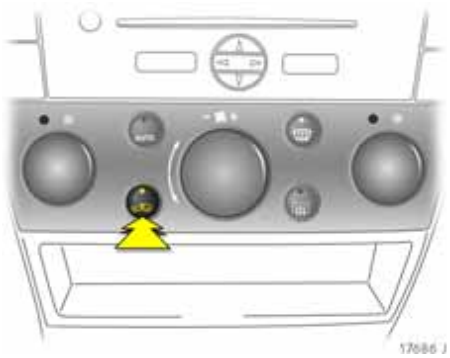

Manual air recirculation mode
The air recirculation system prevents the entry of outside air and the air in the passenger compartment is circulated.

Press button, control indicator in button.

The exchange of fresh air is reduced in air recirculation mode. The quality of the passenger compartment air deteriorates which may cause the vehicle occupants to feel drowsy. In operation without cooling the air humidity increases, so the windows may mist up. Consequently, manual air recirculation should only be run for short periods of time.

To deactivate manual air recirculation: Press button again. The control indicator in the button goes off.

Air conditioning with the engine not running
When the vehicle is stopped and the ignition off, the heat or cooling power still in the system can be used to condition the passenger compartment, for example when stopped at a level crossing.

Press button **AUTO** with the ignition off. **Residual air conditioning on** will appear briefly in the display.

The air conditioning will operate for a limited period of time.

If necessary, the auxiliary heating ✻ also automatically switches on. Observe notes on page 165.

To cancel air conditioning, press the **AUTO** button.

Downloaded from www.Manualslib.com manuals search engine

Ofrecido por www.electromanuales.com

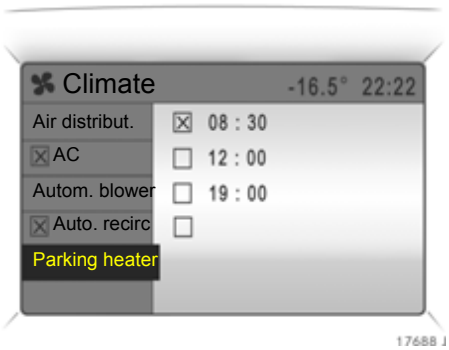

Auxiliary heating/ventilation ✻

If the engine is switched off, the interior is heated or ventilated depending on the values that have been set and the interior temperature.

The regulation is in accordance with the most recent temperature settings in the climate control system – see page 160. When the system is switched on, the temperature setting can be varied using the outer rotary knobs.

The air is directed to the windscreen and the front side windows if the button is pressed before switching the ignition off.

⚠Warning

Do not switch auxiliary heater on in filling stations or closed spaces – risk of fire or injury.

Direct activation

For immediate activation with the ignition on, select menu item **Parking heater** and then menu item **On** from the manual settings menu.

When the system is activated, the control indicator in the button **AUTO** will illuminate.

The system switches itself off automatically after a maximum of 60 minutes depending on the values that have been set and the interior temperature.

For early deactivation, press the **AUTO** button or select menu item **Parking heater** and then menu item **On** once again.

Downloaded from www.Manualslib.com manuals search engine

Ofrecido por www.electromanuales.com

Switching on at a programmed time
Three programmed times can be stored for switching on.

For safety reasons only one programmed time for switching on can be active at any one time. After the heating cycle has been completed, the next required time for switching on must be activated afresh.

To store a programmed time for activation, select menu item **Parking heater** from the manual settings menu.

After menu item **Parking heater** the current status will be shown.

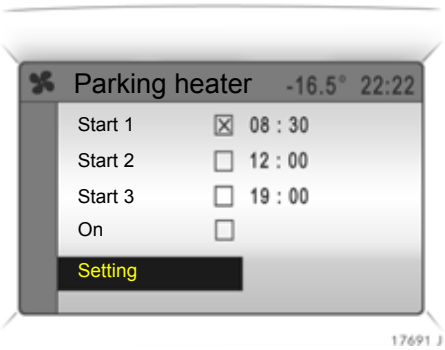

To set a time, select menu item **Setting**.

Then select menu item **Start 1**, **Start 2** or **Start 3** and set the desired time.

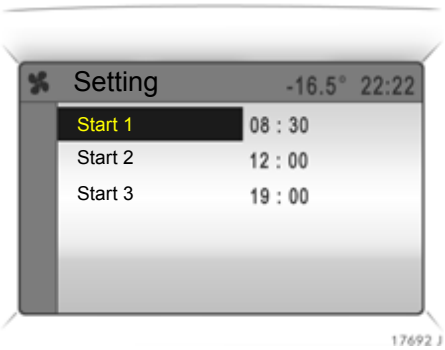

Select the required time for programmed switching on.

When the system is activated, the control indicator in the button **AUTO** will illuminate.

The system switches itself off automatically after a maximum of 60 minutes depending on the values that have been set and the interior temperature.

To cancel air conditioning, press the **AUTO** button.

The menu for auxiliary heating can be called up within 2 hours of switching the ignition off, by pressing on the central rotary knob, and settings entered.

Downloaded from www.Manualslib.com manuals search engine

Ofrecido por www.electromanuales.com

Remote control
The system can also be switched on and off directly using the remote control:

On = Press button ①, the control indicator in the remote control unit will illuminate

Off = Press button O, the control indicator in the remote control unit will illuminate

Whilst the control indicator is illuminated, no further signal can be sent.

When the system is activated, the control indicator in the button **AUTO** will illuminate.

The remote control has a range of approx. 600 m. The range can be reduced by obstructions between the sender and receiver (e.g. walls) and by low power in the battery.

The system switches itself off automatically after a maximum of 60 minutes depending on the values that have been set and the interior temperature.

The auxiliary heating can be switched off at any time by pressing the button O.

Deactivating an activated switch-on time:

1. Press button O.
2. Delay of at least 3 seconds.
3. Press button O again.

If required, up to three additional remote control units can be programmed. We recommend that you consult your Vauxhall Authorised Repairer.

Changing the remote control battery
Replace the battery immediately if the range of the remote control starts to become reduced.

Insert a pointed object into the opening in the underside of the remote control and flip open the cover. Replace batteries observing installation position. For battery type – see page 307.

Always exchange all batteries at the same time.

Make sure that you dispose of old batteries in accordance with environmental protection regulations.

Downloaded from www.Manualslib.com manuals search engine

Ofrecido por www.electromanuales.com

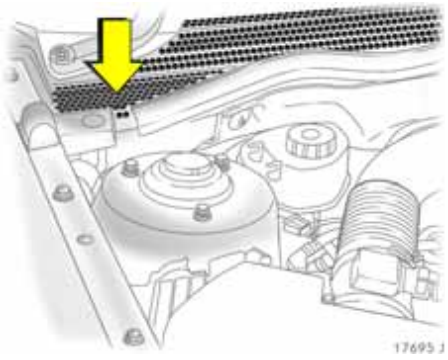

Air intake

The air intakes in front of the windscreen on the far right and left sides of the engine compartment must be kept clear to allow air intake. Remove any leaves, dirt or snow.

Air outlet

Do not cover the air outlets when storing items in the luggage compartment storage compartments.

Pollen filter

The pollen filter cleans dust, soot, pollen and spores from the air entering from outside. The active carbon layer ❇ eliminates most odours and harmful ambient gases from the air.

Have the pollen filter replaced at the intervals specified in the Service Booklet.

General information

If the windscreen is misted due to damp weather, temporarily adjust the system as described under "Demisting and defrosting the windows", see pages 149, 152 and 161.

The cooling system ❇ operates most effectively with the windows and sun roof ❇ closed. If the passenger compartment has heated up considerably after a long period in direct sunlight, briefly open the windows and sun roof ❇ so that the hot air can escape quickly.

Downloaded from www.Manualslib.com manuals search engine

Ofrecido por www.electromanuales.com

When cooling ❇ (air conditioning compressor) is switched on condensation forms, which is expelled from the underside of the vehicle.

At least one air vent must be open while cooling ❇ (air conditioning compressor) is on in order to prevent the evaporator from icing up due to lack of air movement.

Cooling switches off automatically at low outside temperatures.

When the auxiliary heating/auxiliary ventilation ❇ is switched on the Vauxhall alarm system monitoring of the vehicle interior ❇ is deactivated.

Auxiliary heating ❇ consumes fuel (approx. 0.3 litres per heating process on average).

When the auxiliary heating ❇ is switched on there may briefly be some smoke and noise.

The auxiliary heating ❇ only switches itself on at outside temperatures of less than approx. 20 °C and at coolant temperatures of less than approx. 80 °C.

In order to improve heating power and ensure that the engine operating temperature is reached quickly, auxiliary heating ❇ also switches on automatically when driving if the outside temperature is less than approx. 8 °C. This occurs irrespective of stored auxiliary heating switch-on times. Auxiliary heating switches itself off automatically when the engine is switched off, while the combustion air fan continues running for approx. 2 minutes (humming noise).

Maintenance

In order to ensure consistently good operation, the air conditioning compressor ❇ must be switched on for several minutes once per month irrespective of the weather or time of year. If the vehicle has an electronic climate control system, this is done automatically during travel. Operation with cooling (air conditioning compressor) is not possible when outside temperatures are low. Every 6 months, the auxiliary heating ❇ should be operated for a few minutes at a preset temperature above 22 °C.

If a fault occurs, consult a workshop. We recommend your Vauxhall Authorised Repairer.

Downloaded from www.Manualslib.com manuals search engine

Ofrecido por www.electromanuales.com

Easytronic

Transmission display 170
Starting the engine 171
Easytronic operation via the selector lever 171
Move selector lever toward N 171
Starting off 172
Electronically controlled driving programmes 173
Winter programme ❄ 174
Kickdown 174
Braking assistance from engine 175
Stopping the vehicle 175
Vehicle storage 175
"Rocking" the car 176
Manoeuvring the vehicle 176
Fault 176
Interruption of power supply 177

Easytronic ❇

The semi-automatic Easytronic transmission ❇ permits manual (manual mode) or automatic gear shifting (automatic mode), both with automatic clutch control.

⚠Warning

Disregard of these instructions may lead to injuries or endanger life.

Transmission display

Shows the mode or current gear.

Downloaded from www.Manualslib.com manuals search engine

Ofrecido por www.electromanuales.com

Starting the engine

Operate foot brake when starting the engine. The engine can only be started with the foot brake operated. "N" appears in the transmission display. If the foot brake is not operated the control indicator ⊘ illuminates on the instrument panel, and "N" flashes in the transmission display - the engine cannot be started.

Also the vehicle cannot be started if all brake lights have failed.

It is not necessary to select the neutral position before starting. If no gear is engaged, the transmission automatically shifts into neutral position (N) before starting the engine. This can lead to a slight delay when starting.

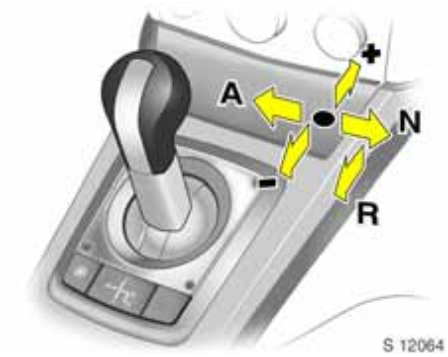

Easytronic operation via the selector lever

Always move the selector lever in the appropriate direction as far as it will go. Upon release, it automatically returns to the centre position. Pay heed to the gear/ mode indicator in the transmission display.

Move selector lever toward N
Neutral.

Downloaded from www.Manualslib.com manuals search engine

Ofrecido por www.electromanuales.com

Starting off
Depress the foot brake, release the hand brake, move the selector lever to **A**, **+** or **-**. Easytronic is in automatic mode and first gear is engaged (second gear if the Winter programme is active). "A" appears in the transmission display.

The vehicle begins to "creep" when the foot brake is released.

It is also possible to start off without depressing the foot brake if the accelerator pedal is operated directly after moving the selector lever. If there is no immediate acceleration or the foot brake is not depressed, no gear is engaged and "A" flashes. After a few seconds, the display reverts to "N". Repeat previously described starting procedure.

In Automatic mode, selection of other gears is automatic irrespective of driving conditions.

Move selector lever toward A
Switch between automatic and manual mode.

Manual gear shifting is possible in manual mode. The currently engaged gear appears in the display.

If the engine speed is too low the Easytronic will automatically shift to a lower gear even in Manual mode. This prevents the engine from stalling.

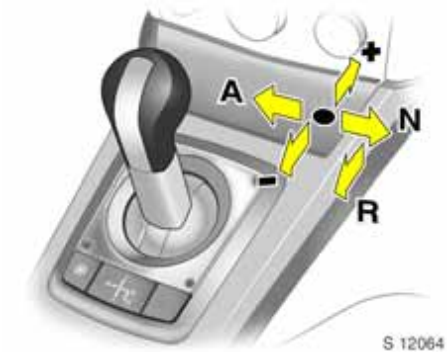

Move selector lever toward + or -
+ Shift to a higher gear.

- Shift to a lower gear.

If a higher gear is selected when the running speed is too low, or a lower gear when the speed is too high, no shift is effected. This prevents the engine from running at too low or too high revs.

Gears can be skipped by moving the selector lever repeatedly at short intervals.

Downloaded from www.Manualslib.com manuals search engine

Ofrecido por www.electromanuales.com

If the vehicle is in automatic mode, on movement of the selector lever to **+** or **-** Easytronic shifts to manual mode and changes up or down. The transmission display shows the currently selected gear.

Move selector lever toward R
Reverse gear. Engage only when vehicle is stationary.

Depress the foot brake, release the hand brake and move the selector lever to **R**. Reverse gear is engaged. "R" appears in the transmission display.

The vehicle begins to "creep" when the foot brake is released.

It is also possible to start off in reverse without depressing the foot brake if the accelerator pedal is operated directly after moving the selector lever. If there is no immediate acceleration or the foot brake is not depressed, no gear is engaged and "R" flashes. After a few seconds, the display reverts to "N". Repeat previously described starting procedure.

Electronically controlled driving programmes

- By means of delayed gear changing (higher engine speeds) following a cold start, the operating temperature programme in automatic mode quickly and automatically brings the catalytic converter to the temperature required for optimum pollutant reduction.
- Adaptive programmes automatically adapt gear shifting in automatic mode to suit the driving conditions, such as if the vehicle is towing a caravan/trailer, has a high payload, or is being driven on inclines.
- Winter programme: Press button ❄ - see next page.

Downloaded from www.Manualslib.com manuals search engine

Ofrecido por www.electromanuales.com

Winter programme ❄

In the event of difficulties starting off on slippery roads, press button ❄ ("A" and ❄ appear in the transmission display). Easytronic switches to automatic mode and the vehicle sets off in second gear.

The winter program is switched off by:
- pressing button ❄ again,
- turning off the ignition.

In order to protect the Easytronic the winter programme automatically switches itself off at extremely high clutch temperatures.

If the vehicle is switched to manual mode while the winter programme is active, the winter programme is interrupted. The winter programme resumes upon return to automatic mode.

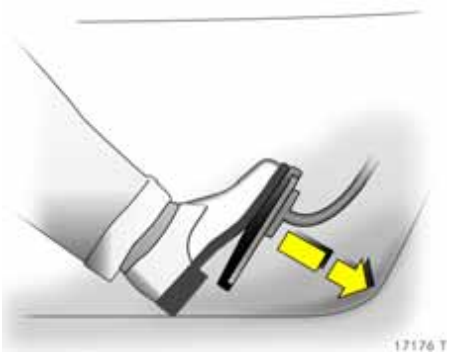

Kickdown

Accelerator pedal pressed past the pressure point: below certain speeds, the transmission shifts down into a lower gear. Full engine power is available for acceleration.

During kickdown no manual gear shifting is possible.

Downloaded from www.Manualslib.com manuals search engine

Ofrecido por www.electromanuales.com

When the engine speed approaches its upper limit, the transmission shifts to a higher gear during kickdown even in Manual mode.

Without kickdown this automatic shift is not effected in Manual mode.

Braking assistance from engine

Automatic mode:
When driving downhill, Easytronic does not shift into higher gears until a fairly high engine speed has been reached. When braking, Easytronic shifts down in good time.

Manual mode:
To utilise the engine braking effect, select a lower gear in good time when driving downhill.

Stopping the vehicle

In Automatic or Manual mode, when the vehicle has stopped first gear (with Winter mode engaged, second gear) is engaged automatically and the clutch released. In **R** reverse remains engaged.

When the engine is running, a gear is engaged and the foot brake is not depressed, a warning buzzer sounds when the driver's door is opened and the gear shown in the transmission display flashes at a rapid rate. If the hand brake is not engaged, the vehicle creeps. Move the selector lever to **N** and apply the hand brake.

When stopping on gradients, engage the hand brake or depress the brake pedal. To prevent overheating of the clutch, do not increase engine speed to ensure smooth idling when in gear.

In order to prevent damage to the Easytronic the clutch is automatically engaged at extremely high clutch temperatures.

Switch off engine if stopping for a lengthy period, e.g. in traffic jams or at level crossings.

Vehicle storage

Before leaving the vehicle:
- engage hand brake,
- remove ignition key.

The most recently engaged gear (indicator in transmission display) remains engaged. With **N**, no gear is engaged.

When the ignition is switched off the Easytronic no longer responds to movement of the selector lever.

Lock the vehicle. Otherwise the battery may become discharged if the vehicle is parked for long periods.

If the hand brake has not been applied, the control indicator (!) flashes for a few seconds after the ignition is switched off.

With the engine off and the hand brake not applied, when the driver's door is opened a warning buzzer sounds and the control indicator (!) flashes; switch on ignition, engage gear, switch off ignition and apply hand brake.

Downloaded from www.Manualslib.com manuals search engine

Ofrecido por www.electromanuales.com

"Rocking" the car

If it becomes necessary to rock the vehicle to free it from sand, mud, snow or a hole, move the selector lever between **R** and **A** (or **+** or **-**) in a repeat pattern while applying light pressure to the accelerator pedal. Do not race the engine and avoid sudden acceleration.

This applies only to the exceptional circumstances mentioned above.

Manoeuvring the vehicle

To manoeuvre the vehicle back and forth during attempts to park or in garage entrances the creeping movement can be utilised by releasing the foot brake.

Never actuate accelerator and brake pedals simultaneously.

To prevent damage, Easytronic disengages the "creep function" at extremely high automatic clutch temperatures.

Fault

Control indicator illuminates in the event of a fault in the Easytronic system. In the event of serious faults, **F** also appears in the transmission display.

It is possible to continue driving if only control indicator illuminates. Manual mode can then no longer be selected.

If **F** appears in the transmission display, continued driving is not possible.

Have the cause of the fault remedied. We recommend that you consult your Vauxhall Authorised Repairer. The system's integrated self-diagnostics allows faults to be quickly remedied.

Downloaded from www.Manualslib.com manuals search engine

Ofrecido por www.electromanuales.com

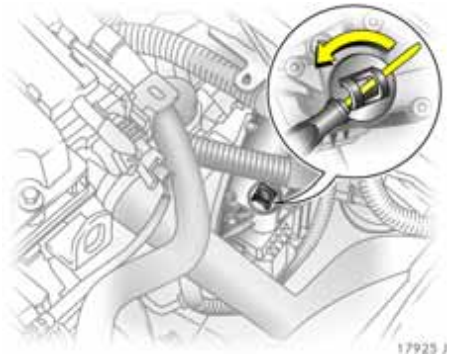

Interruption of power supply

The clutch is not disengaged if the vehicle battery is discharged and a gear has been selected. The vehicle cannot move.

If the battery is flat, start the vehicle using jump leads – see page 230.

If the cause of the interruption to the power supply is not the discharged battery, consult a workshop. We recommend your Vauxhall Authorised Repairer. If the vehicle has to be removed from moving traffic, release clutch as follows:

1. Apply hand brake and switch off ignition.
2. Open bonnet.
3. Clean Easytronic around the cap (see figure 17925 J) so that no dirt can get into the opening when the cap is removed.
4. Rotate cap to slacken and remove by lifting upwards – see figure 17925 J.
5. Turn the adjusting screw clockwise using a flat-head screwdriver (vehicle tools ✻ – see page 238) until clear resistance can be felt. The clutch has now been disengaged.

   Do not turn beyond the resistance, since this can damage the Easytronic.
6. Fit cleaned cap again. The cap must be in full contact with the housing.

Towing the vehicle and starting the engine is not permitted when the clutch has been released in this way, although the vehicle can be moved a short distance.

Consult a workshop immediately. We recommend your Vauxhall Authorised Repairer.

Downloaded from www.Manualslib.com manuals search engine

Ofrecido por www.electromanuales.com

Automatic transmission

Transmission display 179
Selector lever settings P, R, N and D (automatic mode) 179
ActiveSelect (manual mode) 180
Transmission display 179
Electronically controlled driving programmes 181
Winter programme ❄ 182
Kickdown 182
Engine braking 183
"Rocking" the car 183
Manoeuvring the vehicle 183
Stopping the vehicle 184
Fault 184
Interruption of power supply 185

Automatic transmission ❄

The automatic transmission allows automatic shifting (**Automatic mode**) or manual shifting (**Manual mode**) to take place.

The engine can only be started with the selector lever in **P** or **N**. When starting in **N**, depress the foot brake or apply the hand brake. After the engine has started, depress the brake before engaging a gear. Do not accelerate while selecting a gear. Once a gear is engaged and the brake is released, the vehicle "creeps".
Never depress the brake pedal and the accelerator pedal simultaneously. The selected gear is shown in the transmission display, see page 179.

⚠Warning

Disregard of these instructions may lead to injuries or endanger life.

Selecting **D** puts the transmission in automatic mode.

If the selector lever is moved to the left from the **D** position, manual mode is activated. Gearchanges can then be made manually by tipping the selector lever toward **+** or **-**.

Downloaded from www.Manualslib.com manuals search engine

Ofrecido por www.electromanuales.com

Transmission display

Display of selector lever setting, gear and mode.

P Park position.

R Reverse gear.

N Neutral or idling position.

D Automatic mode.

1-6 Manual mode, engaged gear.

Selector lever settings P, R, N and D (automatic mode)

P Park position, front wheels blocked. Only select with vehicle stationary and hand brake applied. "P" appears in the transmission display.

R Reverse gear. Only select when vehicle is stationary. "R" appears in the transmission display.

N Neutral or idling position. "N" appears in the transmission display.

D Drive position for normal driving in 1st to highest gear. "D" appears in the transmission display.

The selector lever can only be moved out of position **P** or **N** with the ignition switched on and the foot brake applied (selector lever lock). In selector lever position **N** the selector lever lock is activated after a delay and only if the vehicle is stationary.

Downloaded from www.Manualslib.com manuals search engine

Ofrecido por www.electromanuales.com

In position **P** or **N**, control indicator illuminates red in the selector lever indicator strip, and the selector lever is blocked.

To engage **P** or **R**, push button on selector lever.

The engine can only be started with lever in position **P** or **N**. When position **N** is selected, press foot brake or engage hand brake before starting.

Do not accelerate during the selection procedure.

If the transmission fluid temperature is less than -25 °C, the selector lever cannot be moved until the fluid temperature reaches -25 °C with the engine running (**P** or **N** flashes in the transmission display for as long as the selector lever is locked).

ActiveSelect (manual mode)

Shift the selector lever from **D** first to the left and then forward or rearward.

+ Shift to a higher gear

- Shift to a lower gear

If a higher gear is selected at too low a speed or a lower gear selected at too high a speed, there is no change. This avoids revs that are too low or too high.

If the engine speed is too slow, the transmission automatically shifts to a lower gear, but not if the gear was selected below a certain speed.

If a higher gear is selected below a certain speed a downshift does not take place.

When engine speed is high, there is no automatic shift to a higher gear.

For reasons of safety, Kickdown also functions in manual mode – see page 182.

The selected gear is shown in the transmission display – see page 179.

Downloaded from www.Manualslib.com manuals search engine

Ofrecido por www.electromanuales.com

Electronically controlled driving programmes

- With adaptive programmes, shifting into other gears is handled automatically based on the driving style, e.g.:
  - Economical driving style: at slower engine speeds.
  - Adaptation to special driving conditions still takes place, such as: driving up and down hills, towing a caravan or trailer, and with a heavy load.
- Automatic neutral shift function automatically sets the transmission to **N** to reduce fuel consumption, e.g. at traffic lights.

  The automatic neutral shift function is activated when the following occurs simultaneously:
  - The selector lever is in Automatic or Manual mode.
  - The foot brake is depressed.
  - The vehicle is stationary.
  - The accelerator pedal is not actuated.
  - The transmission oil temperature is above 0 °C.

  As soon as the brake is released and the accelerator pedal is depressed, the vehicle starts off in the usual manner.
- After a cold start, the operating temperature programme ensures that the correct gear (increased engine speed) is selected to quickly bring the catalytic converter to the temperature required for optimum pollutant reduction.

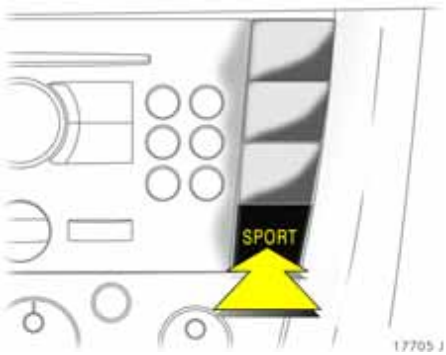

- When SPORT mode of Continuous Damping Control ✻ is activated, shift times are reduced and gearchanges occur at a higher engine speed (unless cruise control is active). Control indicator ⚙ appears in the transmission display. Continuous Damping Control, SPORT mode ✻ – see page 200.
- Winter programme: Press button ❄. Control indicator ❄ appears in the transmission display - see next page.

Downloaded from www.Manualslib.com manuals search engine

Ofrecido por www.electromanuales.com

Winter programme ❄

Press button ❄ if you are having problems starting off on a slippery road surface.

To activate

The winter programme can be activated in automatic mode (❄ illuminates in transmission display). The vehicle starts off in 4th gear.

To deactivate

The winter program is switched off by:

- pressing button ❄ again,
- switching off the ignition,
- switching to Manual mode.

To protect against damage, the starting-off aid automatically cuts out at very high transmission oil temperatures.

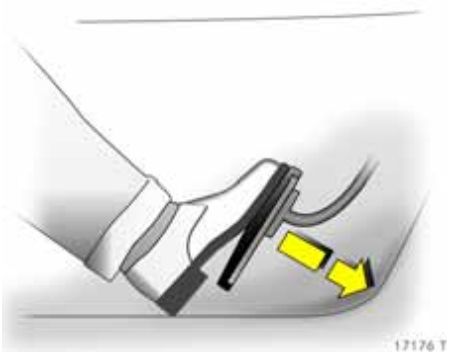

Kickdown

Depress accelerator past resistance point: transmission shifts to a lower gear depending on engine speed. Full engine power is available for acceleration.

For safety reasons, kickdown is available in both automatic mode and manual mode.

Downloaded from www.Manualslib.com manuals search engine

Ofrecido por www.electromanuales.com

Engine braking

The automatic transmission automatically selects the driving programme with optimal engine braking effect.

As needed, lower gears can also be selected in manual mode to increase engine braking effect. 1st gear has the greatest braking effect.

"Rocking" the car

If it becomes necessary to rock the vehicle to free it from sand, mud, snow or a hole, move the selector lever from **D** to **R** in a repeat pattern while simultaneously applying light pressure to the accelerator pedal. Do not race the engine and avoid sudden acceleration.

This applies only to the exceptional circumstances mentioned above.

Manoeuvring the vehicle

To manoeuvre the vehicle back and forth during attempts to park or in garage entrances, the vehicle's creeping movement can be utilised by releasing the brake pedal.

Never actuate accelerator and brake pedals simultaneously.

Downloaded from www.Manualslib.com manuals search engine

Ofrecido por www.electromanuales.com

Stopping the vehicle

The selector lever can be left in the chosen gear with the engine running.

When stopping on gradients engage hand brake or depress brake pedal. To prevent overheating of the transmission, do not increase engine revolutions to ensure smooth idling while standing if a gear has been selected.

Switch off engine if stopping for a lengthy period, e.g. in traffic jams or at level crossings.

Before leaving the vehicle, apply hand brake, then place selector lever in position **P** and remove ignition key.

The ignition key can only be removed when the selector lever is in position **P**.

If the selector lever is not in the **P** position when the ignition is switched off, control indicator in the selector lever indicator strip flashes – see page 180, Fig. 17697 J. Shift the selector lever to **P**.

If the ignition key is not removed, the battery may be discharged if the vehicle is then left to stand for a lengthy period of time.

17544 J

Fault

In the event of a fault in the automatic transmission, control indicator illuminates. The transmission no longer shifts automatically. Driving can be continued.

In manual mode, 2nd gear and the highest gear can be engaged. For some faults, only the highest gear is available.

Only the highest gear is available in **D** in automatic mode.

Downloaded from www.Manualslib.com manuals search engine

Ofrecido por www.electromanuales.com

Illumination of control indicator can also indicate a fault in the engine electronics – see page 195.

For diesel engines[1] Z 19 DTL, Z 19 DT, Z 19 DTH illumination of control indicator could also indicate that the diesel fuel filter must be drained of water – see page 270.

Have the cause of the fault remedied. We recommend that you consult your Vauxhall Authorised Repairer. The system's integrated self-diagnostics allows faults to be quickly remedied.

[1] Sales designation – see page 284.

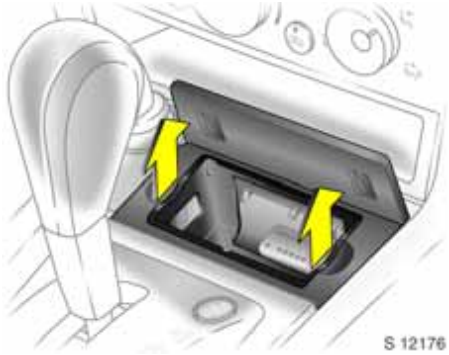

Interruption of power supply

If the vehicle battery is flat, the selector lever cannot be moved out of position **P** or **N**.

If the battery is flat, start the vehicle using jump leads – see page 230.

If the cause is not a discharged battery, unlock selector lever:

1. Apply hand brake.
2. Remove the ashtray – see page 102.
3. Pull out ashtray socket upwards.

4. Push the yellow catch downwards with a screwdriver and move the selector lever out of **P**.
5. Refit ashtray socket in centre console and latch into position.
6. Refit ashtray.

Re-selecting **P** or **N** locks the selector lever again. Have cause of power supply interruption remedied. We recommend your Vauxhall Authorised Repairer.

Downloaded from www.Manualslib.com manuals search engine

Ofrecido por www.electromanuales.com

Driving hints

The first 600 miles / 1000 km

Drive your vehicle at various speeds. Do not use full throttle. Never allow the engine to labour at low revs.

Make good use of all gears. Depress the accelerator pedal a maximum of around three quarters of the available pedal travel in all gears.

Do not drive faster than three quarters of maximum speed.

Do not brake unnecessarily hard for the first 120 miles (200 km).

Never coast with engine not running

Many units will not function in this situation (e.g. brake servo unit, electro-hydraulic power steering). Driving in this manner is a danger to yourself and others.

Brake servo unit

When the engine is not running, the brake servo unit is no longer effective once the brake pedal has been depressed once or twice. Braking effect is not reduced, but significantly greater force is required for braking.

Electro-hydraulic power assisted steering

If the power-assisted steering fails when being towed with the engine switched off, the vehicle can still be steered, but considerably more force is required.

Driving in mountainous terrain or with a trailer/caravan

The cooling fan is electrically operated. Its cooling power is therefore independent of the engine speed.

Since a considerable amount of heat is generated at high engine speeds and less at slower speeds, do not shift down when climbing hills whilst the vehicle is still coping with the gradient in the higher gear.

Diesel engine: On rising gradients of 10% or more, do not drive faster than 20 mph (30 km/h) in 1st gear or 30 mph (50 km/h) in 2nd gear; with automatic transmission ✻, do not exceed 25 mph (40 km/h) in position **1**.

Driving with a roof load

Do not exceed the permissible roof load – see pages 220, 293. For reasons of safety, distribute the load evenly and secure it properly with retaining straps. Adjust the tyre pressure to the load conditions. Do not drive faster than 75 mph (120 km/h). Check and retighten the straps frequently. Observe country-specific regulations.

Switching off the engine

When you switch off, fans in the engine compartment may continue running for a time to cool the engine.

Downloaded from www.Manualslib.com manuals search engine

Ofrecido por www.electromanuales.com

If the engine temperature is very high, e.g. after driving in mountainous terrain: allow the engine to idle for approximately two minutes in order to prevent heat accumulation.

Vehicles with turbocharged engine
After running at high engine speeds or high engine loads, operate the engine briefly at a low load or run in neutral for approx. 30 seconds before switching off in order to protect the turbocharger.

Save energy – more miles

Please observe the running-in hints on the previous page and the tips for energy saving on the following pages.

Good, technically correct and economical driving ensures maximum durability and performance for your vehicle.

Overrun

The fuel supply is automatically shut off during overrun, e.g. when the vehicle is being driven down long gradients or when braking. To enable the overrun cut-off to take effect, do not accelerate during overrun and, if in manual transmission mode, do not de-clutch. To prevent damage to the catalytic converter, overrun cut-off is temporarily deactivated when the catalytic converter temperature is high.

Vehicles with turbocharged engine
Flow-generated noises may be audible if the accelerator is released quickly on account of air flow in the turbocharger.

Engine speed

Drive in a low engine speed range for each gear as much as possible.

Warming up

Allow the engine to warm up while driving. Do not warm it up by letting it run at idling speed. Do not apply full throttle until the engine has reached operating temperature.

After a cold start, the automatic transmission ✻ or Easytronic ✻ in automatic mode shifts into higher gears at higher rpm. This allows the catalytic converter to quickly reach the temperature required for optimum pollutant reduction.

Correct gear selection

Engine in neutral and without revving in the lower gears. Stop-and-go traffic and driving at a speed too high for the selected gear or transmission ratio increases wear and fuel consumption.

Change down

When decreasing speed, shift down into the next lowest gear. Do not slip the clutch with a high-revving engine. This is especially important when hill climbing.

Clutch operation

Always depress the clutch pedal hard to the floor to prevent shifting difficulties and transmission damage.

When driving do not use the pedal as a foot rest; this will cause substantial clutch wear.

Cooling fan

The cooling fan is controlled via a thermoswitch and therefore only runs if necessary.

The cooling fan automatically switches on when the diesel particle filter is being cleaned ✻ depending on the engine.

Pedals

Do not place any objects in the foot well which could slip under the pedals and inhibit the pedal travel.

To ensure the pedal travel is uninhibited, there must be no mats in the area of the pedals.

Battery care

When driving slowly or when the vehicle is stationary, e.g. in slow urban traffic, stop-and-go traffic or traffic jams, turn off all unnecessary electrical loads where possible (e.g. heated rear window, heated seats).

Declutch when starting in order to relieve the strain on the starter and the battery.

Downloaded from www.Manualslib.com manuals search engine

Ofrecido por www.electromanuales.com

Saving fuel, Protecting the environment

Trend-setting technology

When developing and manufacturing your vehicle, Vauxhall used environment-friendly and in the main recyclable materials. The production methods used to make your vehicle are likewise environmentally-compatible.

Recycling of production wastes keeps the circulation of material closed. Reduction of energy and water requirements also helps to conserve natural resources.

A highly advanced design means that your vehicle can be easily disassembled at the end of its working life, and the individual materials separated for subsequent re-use.

Materials such as asbestos and cadmium are not used. The refrigerant in the air conditioning system ✻ is CFC-free.

New painting techniques employ water as a solvent.

End-of-life vehicle recovery

For detailed information on Vauxhall's ongoing commitment to achieving an environmentally sustainable future, including; design for recycling, take back of End-of-Life Vehicles (ELVs) and the recycling of ELVs view www.vauxhall.co.uk/recycling for details.

Energy and environment-conscious driving

- High noise levels and exhaust emissions are often a result of driving without due attention to saving energy and protecting the environment.
- You should therefore drive with energy in mind "more miles – less fuel".

  Reduce the noise level and exhaust emissions by adopting an environment-conscious driving style. This is extremely worthwhile and improves the quality of life.

  Fuel consumption depends to a great extent on your own personal driving style. The following hints are intended to help you consume fuel at a rate that is as close as possible to the specified levels – see page 287.

  Check your vehicle's fuel consumption every time you refuel. This facilitates early detection of any irregularities causing increased fuel consumption.

Warming up

- Full throttle and warming up at idle speed increase wear, fuel consumption, exhaust emission, the amount of pollutant in the exhaust and the amount of noise.
- Drive off as soon as possible after starting.

Uniform speed

- Hectic driving significantly increases fuel consumption, the exhaust emissions, the proportion of pollutant in the exhaust gas and the noise level.
- Do not accelerate and brake unnecessarily. Drive at uniform speed, watching the road.

  Avoid frequent starting off and stopping e.g. at traffic lights, in short distance traffic and in queues of traffic by means of clever planning. Select roads with good traffic flow.

Idling

- The engine also consumes fuel when idling.
- If you have to wait for more than one minute, it is worthwhile switching off the engine. Five minutes of idling corresponds to approximately 0.6 mile (1 km)of driving.

Downloaded from www.Manualslib.com manuals search engine

Ofrecido por www.electromanuales.com

Overrun

- The fuel supply is automatically shut off during overrun, e.g. when the vehicle is being driven down long gradients or when braking – see page 187.
- To enable the overrun cut-off to come into action and save fuel, do not accelerate or declutch during overrun.

Correct gear selection

- High revs increase engine wear and fuel consumption.
- Do not race your engine. Avoid driving at high engine speeds.

  Making use of the tachometer helps to save fuel. Drive in a low engine speed range for each gear as much as possible with uniform engine speeds. Drive as often as possible in top gear, select the next higher gear as soon as possible, and only change down when the engine is no longer running perfectly smoothly.

High speed

- The higher the speed, the higher the consumption and the noise level. At top speed, you consume a great deal of fuel and produce excessive noise and exhaust emissions.
- Slightly releasing the accelerator pedal results in distinct fuel savings with no major loss of speed.

  Drive at no more than around three quarters of maximum speed and you will use up to 50% less fuel, without losing a great deal of time.

Tyre pressure

- Inadequate tyre pressure, leading to higher road resistance, costs money in two ways: for more fuel and increased tyre wear.
- Regular checks (every 14 days) pay off.

Electrical loads

- The power consumption of electrical equipment increases fuel consumption.
- Switch off all auxiliary electrical loads (e.g. air conditioning ❇, heated rear window) when not needed.

Roof racks, ski-holders

- Due to air resistance, a roof load can increase fuel consumption by approx. 3.5 gal/h (1 l/100 km).
- Remove them if they are not being used.

Repair and maintenance

- Improper repairs or adjustment and maintenance work can increase fuel consumption. Do not carry out work on the engine yourself.

  You may out of ignorance infringe environmental laws by not disposing of materials properly.

  Appropriate parts might not be recycled.

  Contact with some of the materials involved may pose a health hazard.
- We recommend that repair and maintenance be entrusted to your Vauxhall Authorised Repairer.

Extreme driving conditions

- Going up steep slopes, cornering, driving on poor roads and winter driving all increase fuel consumption.

  Fuel consumption increases dramatically in urban traffic and at winter temperatures, especially on short trips when the engine operating temperature is not reached.
- Follow the hints given above to keep consumption to a minimum under such conditions.

Downloaded from www.Manualslib.com manuals search engine

Ofrecido por www.electromanuales.com

Fuel consumption, fuel, refuelling

Fuel consumption 190
Fuel for petrol engines 190
Fuel for diesel engines..... 191
Fuel filler cap..... 191
Refuelling..... 191

Fuel consumption

Fuel consumption is determined under specific driving conditions – see page 287.

Special equipment increases the weight of the vehicle. As a result, they can increase fuel consumption and reduce the specified maximum speed.

For the first few thousand miles, friction between the engine and transmission components is higher. This increases fuel consumption.

Fuel for petrol engines

Normal commercial high-quality fuels with a maximum ethanol content of 5% in accordance with DIN EN 228 are suitable (for catalytic converter see page 193, for octane numbers see pages 284, 285). The quality thereof has considerable effect on the performance, running and service life of the engine. The additives mixed with the fuel are extremely important. For this reason you must only refuel with high-quality fuels containing additives.

Fuels with ethanol content greater than 5% do not comply with DIN EN 228 and must not be used unless the vehicle has been specifically developed and approved for these fuels.

Fuel with too low an octane number can cause pinking. Vauxhall cannot be held liable for resulting damage.

Petrol with a higher octane number can always be used.

The use of 91 octane fuel is not permitted in vehicles with the Z 22 YH[1)] engine or the Vectra VXR.

Pump nozzles for leaded fuel cannot be inserted into the filler neck of vehicles that operate on unleaded fuel.

The ignition timing adjusts automatically to the grade of fuel used (octane number) – see pages 284, 285.

Use of petrol with an octane rating of 95 will ensure economical driving.

Fuel with 95 RON will result in less power and torque with the Vectra VXR.

[1)] Sales designation – see page 284.

Downloaded from www.Manualslib.com manuals search engine

Ofrecido por www.electromanuales.com

Fuel for diesel engines

Diesel engines must be operated only on commercially available diesel fuel meeting the specifications of DIN EN 590.

Since January 2004, some oil companies have mixed their diesel fuel with upto 5% Bio fuel (FAME = Fatty Acid Methyl Esters) like RME (Rape-Oil Methyl Ester). This is in accordance with the current DIN EN 590 and does not harm the fuel/injection system. The characteristics of a diesel fuel mixed up with 5% Bio fuel (FAME) do not differ from conventional diesel fuel and do not influence the vehicle's driveability.

Important: Diesel fuel mixed with 5% FAME according to DIN EN 590 must not be confused with 100% Bio Diesel, which is not to be used in Vauxhall engines.

The flow and filterability of diesel fuel are temperature-dependent.

Diesel fuels with improved low temperature properties are therefore available on the market during the winter months. Make sure that you fill the tank with winter fuel before the start of the cold weather season.

Additives can be used with diesel fuels with winter properties that are guaranteed by the manufacturer and when using diesel fuel filters that are heated depending on the outside temperature.

Diesel fuels must not be diluted with fuels that are intended for petrol engines.

Fuel filler cap

If replacing the fuel filler cap, be sure to use a genuine Vauxhall fuel filler cap for your model to ensure full functionality. Diesel-engined vehicles have special fuel filler caps.

Refuelling

⚠Warning

Care must be taken when handling fuel.

Before refuelling, turn off engine and also shut off external heaters with combustion chambers (identified by stickers on fuel filler cap). Switch off mobile phones.

The tank display updates more quickly if the ignition is switched off during refuelling.

Downloaded from www.Manualslib.com manuals search engine

Ofrecido por www.electromanuales.com

⚠Warning

Fuel is flammable and explosive. Avoid naked flames and sparks when handling fuel, and even in the vicinity of fuel. Do not smoke! This also applies if the presence of fuel is only noticeable due to the smell of fuel. If you smell fuel inside the vehicle, have the cause checked out immediately. We recommend that you use your Vauxhall Authorised Repairer.

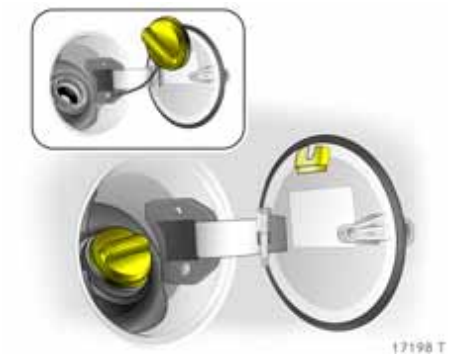

Fuel filler neck at right rear side of vehicle.

The tank flap is locked together with the doors – see page 66.

Open the tank flap.

To open, unscrew the fuel filler cap, remove and suspend from the tank flap.

The fuel tank has a limiting system which prevents overfilling of the tank.

Correct filling depends to a large extent on proper operation of the fuel dispensing pump:

1. Fully insert the pump nozzle and switch it on.
2. After an automatic shut-off the nominal capacity of the fuel tank is reached by means of two metered top-ups. Insert fuel dispensing pump as far as it will go.

To close, position the fuel filler cap and rotate past the resistance until the cap audibly clicks over the retainer.

Close fuel tank cover.

Wipe off any overflowing fuel immediately.

Downloaded from www.Manualslib.com manuals search engine

Ofrecido por www.electromanuales.com

Catalytic converter, exhaust gases

Catalytic converter for petrol engines 193
Catalytic converter for diesel engines 194
Controlling exhaust emission..... 195
Exhaust gases..... 196
Maintenance..... 197

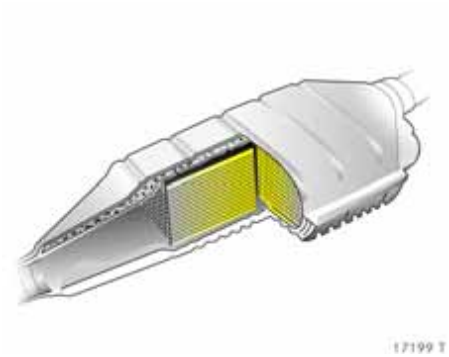

Catalytic converter for petrol engines

Leaded fuel will damage the catalytic converter and parts of the electronic system, rendering them inoperative.

Use of high-quality fuels other than those specified on page 190 (e.g. LRP[1]) could damage the catalytic converter.

On vehicles with a catalytic converter, the fuel tank filler neck is of a narrow design so that a dispensing pump for leaded fuel cannot be inserted.

[1] **LRP** = **L**ead **R**eplacement **P**etrol.

Damage to the catalytic converter or the vehicle may result if the following points are not observed:

- Consult a workshop, such as your Vauxhall Authorised Repairer, as quickly as possible in the event of misfiring, irregular engine running following a cold start, a significant loss of engine power or other unusual malfunctions which may indicate a fault in the ignition system. If necessary, driving may be continued for a short time at a low speed and with a low engine speed.

  Irregular engine running and a loss of engine power when the Electronic Stability Program (ESP®[Plus] ✻) comes into action are the result of operating conditions and are therefore of no significance - see page 198.

►

Downloaded from www.Manualslib.com manuals search engine

Ofrecido por www.electromanuales.com

- If unburned fuel enters the catalytic converter, this may result in overheating and irreparable damage to the catalytic converter.

  You should therefore avoid unnecessarily long use of the starter when starting off, running the tank dry (an irregular fuel supply will lead to overheating) and starting the engine by pushing or towing.

- If the emission control indicator flashes, slow down until the flashing stops and the control indicator is steady. Consult a workshop immediately. We recommend your Vauxhall Authorised Repairer. For emission control indicator – see page 195.

Catalytic converter for diesel engines

Damage to the catalytic converter or the vehicle may result if the following points are not observed:

- Consult a workshop, such as your Vauxhall Authorised Repairer, as quickly as possible in the event of irregular engine running, a significant loss of engine power or other unusual malfunctions. If necessary, driving may be continued for a short time at a low speed and with a low engine speed.

  Irregular engine running and a loss of engine power when the Electronic Stability Program (ESP®Plus ✻) comes into action are the result of operating conditions and are therefore of no significance - see page 198.

Downloaded from www.Manualslib.com manuals search engine

Ofrecido por www.electromanuales.com

Controlling exhaust emission

Through design-related measures – mainly in the area of the fuel-injection and ignition systems – the proportion of noxious materials in the exhaust, such as carbon monoxide (CO), hydrocarbons (HC) and nitrogen oxides (NO_x), is reduced to a minimum.

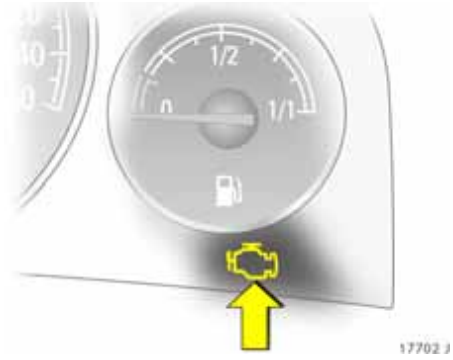

Control indicator for exhaust
Illuminates when the ignition is switched on and during the start attempt. Goes off shortly after the engine starts running.

If it illuminates while the engine running there is a fault in the emission control system. The permitted emission values may be exceeded. Consult a workshop immediately. We recommend your Vauxhall Authorised Repairer.

Flashing with the engine running indicates a fault that may damage the catalytic converter. You can continue to drive without causing damage by slowing down until the flashing stops and the control indicator is steady. Consult a workshop immediately. We recommend your Vauxhall Authorised Repairer.

Downloaded from www.Manualslib.com manuals search engine

Ofrecido por www.electromanuales.com

Control indicator for engine electronics
Illuminates for a few seconds after the ignition is switched on.

If it illuminates when the engine is running, there is a fault in engine or transmission electronics. The electronic system switches to an emergency running programme. Fuel consumption may be increased and the driveability of the vehicle may be impaired.

In some cases, the fault can be remedied by switching the engine off and on again. If the control indicator illuminates again when the engine is running, consult a workshop to have the cause of the fault remedied. We recommend your Vauxhall Authorised Repairer.

If it illuminates briefly, but does not recur, it is of no significance.

Illumination of can also be an indication of water in the diesel fuel filter in engines[1] Z 19 DTL, Z 19 DT and Z 19 DTH. Have the fuel filter checked for water residue. We recommend that you consult your Vauxhall Authorised Repairer.

If it flashes after the ignition is switched on, there is a fault in the immobiliser system. The engine cannot be started. See page 63.

[1] Sales designation – see page 284

Exhaust gases

⚠Warning

Engine exhaust gases contain poisonous carbon monoxide, which is colourless and odourless and could be fatal if inhaled.

If exhaust fumes penetrate the vehicle interior, open the windows and consult a workshop immediately. We recommend your Vauxhall Authorised Repairer.

During the first drive smoke may develop because of wax and oil evaporating on the exhaust system. Park the vehicle in the open for a while after the first drive and avoid inhaling the fumes.

Downloaded from www.Manualslib.com manuals search engine

Ofrecido por www.electromanuales.com

Diesel particle filter ✻
The diesel particle system filter polluting soot particles out of the exhaust.

The system contains a self-cleaning function at certain intervals. The filter is cleaned by burning the soot particles at high temperature, This procedure runs automatically under certain vehicle conditions and can take up to 25 minutes, during which time fuel consumption may increase. The smell and the noise that occur are normal.

The system cannot automatically clean itself under certain vehicle conditions such as driving short distances.

If the control indicator flashes, you should continue driving and as soon as the road and traffic situation permits it, increase speed to more than 25 mph (40 km/h) and diesel particle filter cleaning will start. Cleaning is quicker at faster speeds and under load. The engine speed should not drop below 2000 rpm. The control indicator goes off as soon as cleaning is complete.

We recommend that you do not turn the ignition off during cleaning.

Maintenance

Have all maintenance work carried out at the intervals specified by Vauxhall. We recommend that you entrust this work to your Vauxhall Authorised Repairer, who has proper equipment and trained personnel available. Electronic testing systems permit rapid diagnosis and remedy of faults. This way you can be certain that all components of the vehicle's electrical, injection and ignition systems operate correctly, that your vehicle has a low level of pollutant emission and that the catalytic converter system will have a long service life.

You are thereby making an important contribution towards keeping the air clean and compliance with emissions legislation.

Checking and adjustment of the fuel injection and ignition systems is part of the scope of inspection. For this reason you should have all maintenance work carried out at the intervals specified in your Service Booklet.

Downloaded from www.Manualslib.com manuals search engine

Ofrecido por www.electromanuales.com

Drive Control Systems

Interactive Driving System 198
Electronic Stability Program 198
Cruise control ✻ 202
Parking distance sensor ✻ 204
Automatic level control ✻ 206
Tyre pressure monitoring system ✻ ... 206

Interactive Driving System (IDS+ = Interactive Driving System) ✻

The IDS+ combines the sensors and control units of the Electronic Stability Program (ESP®Plus), the Anti-lock Brake System (ABS) and Continuous Damping Control (CDC). This provides both excellent driving dynamics and greater safety.

Electronic Stability Program (ESP®Plus) ✻

ESP®Plus improves driving stability when necessary in any driving situation regardless of the type of road surface or tyre grip. It also prevents the drive wheels from spinning.

The system monitors vehicle movements. As soon as the vehicle starts to swerve (understeers/oversteers) engine output is reduced (the sound of the engine changes) and individual wheels are specifically braked. This considerably improves the driving stability of the vehicle on snow and ice and on wet or slippery road surfaces.

ESP®Plus is ready for operation as soon as the ignition is switched on and control indicator goes out.

Control indicator flashes when ESP®Plus is in action.

The vehicle is now in a critical situation; ESP®Plus allows you to keep control of the vehicle and reminds you to match your speed to the road conditions.

⚠Warning

Do not let this special safety feature tempt you into taking risks when driving.

Traffic safety can only be achieved by adopting a responsible driving style.

Downloaded from www.Manualslib.com manuals search engine

Ofrecido por www.electromanuales.com

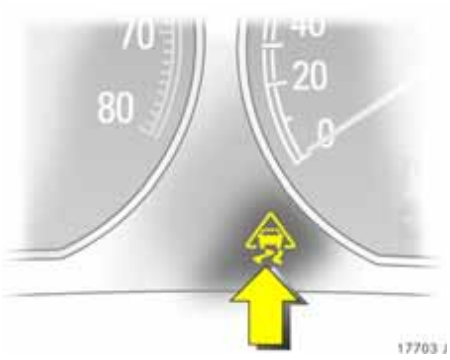

Control indicator
Illuminates for a few seconds when the ignition is switched on. The system is now ready for operation.

Flashing during driving
This shows the system has come into action. The engine output may be reduced (the sound of the engine changes) and the vehicle may be braked automatically to a small degree.

Illuminates while driving
The system is switched off or a fault has occurred. The vehicle can continue to be driven. However, driving stability may worsen depending on the nature of the road surface.

Reactivate ESP®Plus or have the cause of the fault remedied. We recommend that you consult your Vauxhall Authorised Repairer. The system's integrated self-diagnostics allow faults to be quickly remedied.

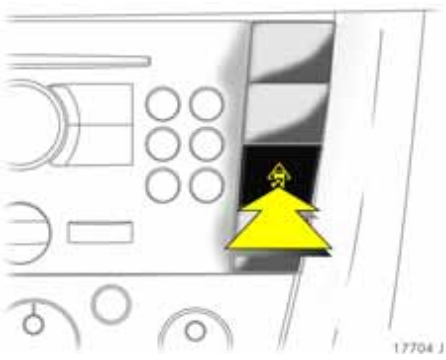

Switching off
ESP®Plus can be deactivated by pressing button .

Deactivation is only possible up to a speed of 40 mph (60 km/h) and is indicated by illumination of control indicator on the instrument panel.

Pressing the button again or turning on the ignition switches ESP®Plus on again.

Downloaded from www.Manualslib.com manuals search engine

Ofrecido por www.electromanuales.com

Continuous Damping Control ✻ (CDC)

Normal mode

CDC automatically adapts vehicle damping to the current driving situation and road conditions.

The system continually monitors wheel and vehicle movements and immediately modifies the damping of each shock absorber. Chassis calibration is optimally adapted to the driving situation and road conditions.

Continuous Damping Control is always in normal mode with the ignition is switched on. If desired, the system can be switched to SPORT mode.

In SPORT mode, the damping control is adapted to a sportier driving style, among other things. This adaptation results in a "harder" suspension setting.

SPORT mode - see next column.

SPORT mode

In SPORT mode the damping, the steering and the acceleration are modified while driving, as are the shifting points if the vehicle has automatic transmission ✻.

Damping and steering become more direct and provide better contact with the road surface. The engine reacts more quickly to accelerator movements.

With automatic transmission ✻ the shift times are reduced and gear changes occur at higher engine speeds (not when cruise control ✻ is active).

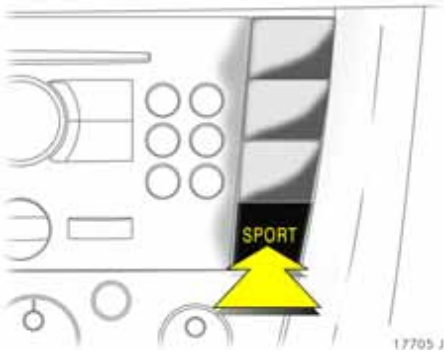

Activating SPORT mode

Press the **SPORT** button. The LED in the button illuminates.

In vehicles with automatic transmission ✻ the control indicator ⚙ also illuminates in the transmission display.

If the winter programme has been switched on ✻ (vehicles with automatic transmission ✻) SPORT mode cannot be activated.

Winter programme – see page 182.

Downloaded from www.Manualslib.com manuals search engine

Ofrecido por www.electromanuales.com

Deactivating SPORT mode
Briefly press the **SPORT** button again. The LED in the button goes out. The Continuous Damping Control system resumes Normal mode.

SPORT mode is switched off by switching on the ignition or switching off the winter programme ❇ (vehicles with automatic transmission ❇).

Winter programme – see page 182.

Control indicator ! for Continuous Damping Control or SPORT mode fault
Illuminates for a few seconds when the ignition is switched on. If the control indicator does not go out or illuminates while driving, there is a fault in the Continuous Damping Control or SPORT mode system. The system is not operational. Have the cause of the fault remedied. We recommend that you consult your Vauxhall Authorised Repairer.

The system's integrated self-diagnostics allows faults to be quickly remedied.

Downloaded from www.Manualslib.com manuals search engine

Ofrecido por www.electromanuales.com

Cruise control ✻

Cruise control can store and maintain speeds of approx. 20 to 125 mph (30 to 200 km/h). Deviation from the saved speed is possible on uphill or downhill inclines.

For safety reasons, cruise control cannot be activated until the foot brake has been activated.

Cruise control is operated with buttons ⏲, ⏲, and **O** on the turn signal stalk.

Do not use the cruise control if it is not advisable to maintain a constant speed (e.g. in situations presenting a danger to yourself and other road users, in heavy traffic or on winding, slippery or greasy roads).

With automatic transmission ✻, only use cruise control in **D** or in automatic mode with Easytronic ✻.

When the cruise control is active, reaction times may be increased due to the different position of the feet.

⚠Warning

Even with cruise control activated, the driver has full responsibility for maintaining an appropriate speed. Disregard of these instructions could lead to injury or danger to life.

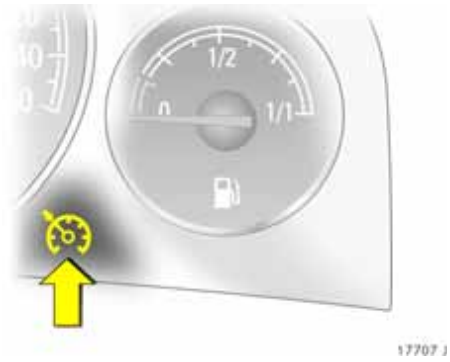

Control indicator ⏲
Illuminates for a few seconds when the ignition is switched on. The system is now ready for operation.

When driving, control indicator ⏲ will illuminates as soon as the system is switched on.

Downloaded from www.Manualslib.com manuals search engine

Ofrecido por www.electromanuales.com

To activate
Briefly press button ⏲: the current speed is stored and maintained. The accelerator pedal can be released.

Vehicle speed can be increased by depressing the accelerator pedal. When the accelerator pedal is released, the previously stored speed is resumed.

Increase
With cruise control active, hold down button ⏲ or briefly press it repeatedly: speed is increased continuously or in steps of 1.2 mph (2 km/h) without using the accelerator pedal.

When button ⏲ is released the current speed is stored and maintained.

Decelerate
With cruise control active, hold down button ⏲ or briefly press it repeatedly: speed is reduced continuously or in steps of 1.2 mph (2 km/h).

When button ⏲ is released the current speed is stored and maintained.

To deactivate
Briefly press button O: Cruise control is switched off, control indicator ⏲ goes out and the vehicle slowly decelerates. To continue driving, depress the accelerator pedal in the usual manner.

For reasons of safety, cruise control deactivates under certain driving conditions.

For example:

- the vehicle's speed drops below approx. 20 mph (30 km/h) or
- the brake pedal is depressed or
- the clutch pedal is depressed or
- selector lever of automatic transmission ✻ or Easytronic ✻ in **N**.

Resuming the stored speed
Briefly press button ⏲ at a speed above 20 mph (30 km/h): the speed selected before the cruise control was switched off is resumed.

The stored speed value is deleted when the ignition is switched on.

Downloaded from www.Manualslib.com manuals search engine

Ofrecido por www.electromanuales.com

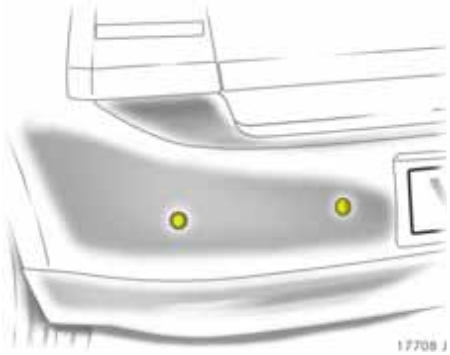

Parking distance sensor ✻

The parking distance sensor makes reverse parking easier by measuring the distance between the vehicle and an obstacle, and giving an acoustic signal in the passenger compartment.

The system registers distance by means of four sensors in each of the front and rear bumpers.

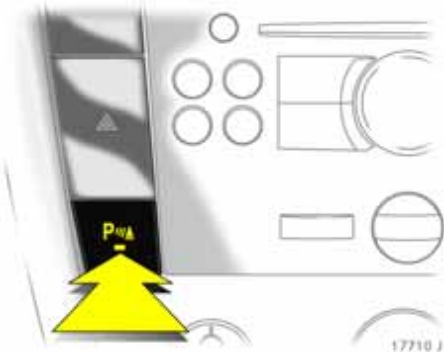

To activate

With the ignition switched on, the front and rear parking distance sensor systems are automatically activated when reverse gear is engaged.

The parking distance sensor can also be activated at speeds of less than 15 mph (25 km/h) by pressing the P button on the instrument panel.

An illuminated LED and an acoustic signal indicate that it is ready for operation.

Downloaded from www.Manualslib.com manuals search engine

Ofrecido por www.electromanuales.com

If the vehicle approaches an obstacle to the front or rear, an series of signals is sounded in the vehicle interior. The interval between the signals becomes shorter as the distance is reduced. If the distance is less than 30 cm, the signal will be continuous.

⚠Warning

Under certain circumstances, various reflective surfaces on objects or clothing as well as external noise sources may cause the system to fail to detect obstacles. For this reason, care must be taken when reversing even if the parking distance sensor is operational. This is of particular importance when in the vicinity of pedestrians.

To deactivate
To deactivate the system, press button P⁄▲ again, the LED in the button will go dark.

The system switches itself off automatically when the forwards speed exceeds approx. 15 mph (25 km/h).

Control indicator P⁄▲
Illuminated
Fault in the system. The system is not ready for operation. Have the fault remedied. We recommend that you consult your Vauxhall Authorised Repairer. The system's integrated self-diagnostics allows faults to be quickly remedied.

If it flashes
The fault is due to sensors obstructed with snow or ice. The sensors must be undamaged and free of dirt, snow and ice.

Interference due to external sources of ultra sound (e.g. pneumatic drills, rotary machines). Once the source of interference is removed, the system will operate normally.

Caravan/trailer towing equipment ✻, Caravan/trailer towing
The system automatically detects if a towbar is properly fitted to the vehicle.

When towing, inserting the trailer plug in the socket automatically switches off the parking distance sensor.

Fitting rear load racks ✻
Rear load racks, e.g. bicycle racks, fitted near the sensors could disrupt the system.

Downloaded from www.Manualslib.com manuals search engine

Ofrecido por www.electromanuales.com

Automatic level control ✻

Automatic level control makes it possible to keep the height of the vehicle constant when subjected to different loads in the rear (e.g. when towing a caravan or trailer). This significantly improves driving conditions.

The vehicle is automatically raised at the rear, increasing the spring travel and ground clearance.

The automatic level control system is activated after approx. 2 miles (3 km), depending on the vehicle loading and the nature of the road surface.

Headlight range adjustment
– see page 129.

In the event of malfunctions, do not utilise the vehicle's full load capacity. Have the cause remedied without delay. We recommend that you consult your Vauxhall Authorised Repairer.

Tyre pressure monitoring system ✻

The tyre pressure monitoring system continuously monitors the pressure of all four tyres while the vehicle is being driven.

A pressure sensor is integrated in each wheel. Once each minute, the pressure of each tyre is sent to a control unit for comparision. if the system detects one or more pressure differences, control indicator (!) illuminates or flashes red. In vehicles with check control ✻, the exact pressure of the tyre in question appears in the information display.

In vehicles with graphical information display ✻ or colour information display ✻ and trip computer ✻, current tyre pressures can be shown in the information display.

For the system to be operational, all wheels must be equipped with pressure sensors and all tyres must be inflated to the prescribed pressure. The tyre pressure monitoring system automatically detects if the vehicle is being driven with a load of up to 3 persons or a full load.

Downloaded from www.Manualslib.com manuals search engine

Ofrecido por www.electromanuales.com

Once the ignition is switched on, the system is operational and will continuously monitor the tyre pressures at speeds of approx. 20 mph (30 km/h) and above.

⚠Warning

The tyre pressure monitoring system does not replace manual checks with a suitable gauge.

Check tyre pressures at least every 14 days and prior to any long journey; the tyres should be checked when cold. Don't forget to check the spare ✻.

Tyre pressure – see pages 215, 299.

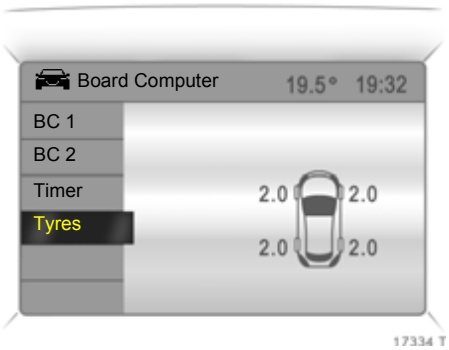

Display of current tyre pressure ✻
Select menu item **Tyres** from the **Board Computer** menu.

The current pressure of each tyre is displayed.

Control indicator ⓘ in red as warning message
Illumination in red while driving indicates deviating tyre pressure.

Indicator illuminates red
Minor tyre pressure difference; slow down. Check tyre pressure at next opportunity with a suitable gauge and correct if necessary.

Indicator flashes red
Considerable pressure difference or direct loss of pressure! Stop immediately and check tyre and tyre pressure. Fit spare wheel if necessary, see pages 236, 238.

Downloaded from www.Manualslib.com manuals search engine

Ofrecido por www.electromanuales.com

Warning messages in the graphical information display ✻ or colour information display ✻

In the version with check control ✻ differing tyre pressures while driving are indicated by messages on the information display. The message appears in abbreviated form depending on the version.

For example, the following messages can be displayed:

A graphic ✻ indicating the left rear tyre is shown together with the current tyre pressure: Slight pressure deviation. Reduce speed. Check pressure at next opportunity with appropriate gauge and correct if necessary.

On the colour information display this report will appear in yellow.

A diagram ✻ appears at the same time, marking the front left tyre and showing the current tyre pressure: Considerable pressure difference or direct loss of pressure! Exit flow of traffic as soon as possible without obstructing other vehicles, stop and check tyre and tyre pressure. Fit spare wheel if necessary, see pages 236, 238.

On the colour information display this report will appear in red.

Acknowledgement of warnings – see page 50.

Downloaded from www.Manualslib.com manuals search engine

Ofrecido por www.electromanuales.com

Control indicator ⓘ in yellow as fault message
If control indicator ⓘ illuminates yellow while driving, there is a fault in the tyre pressure monitoring system. Fitting a wheel without pressure sensor (e.g. spare wheel) will also generate a fault in the system. Have the cause of the fault remedied. We recommend that you consult your Vauxhall Authorised Repairer. The system's integrated self-diagnostics allows faults to be quickly remedied.

General information
The spare tyre or temporary spare wheel is not equipped with a pressure sensor. If the spare tyre or temporary spare wheel is used the tyre pressure monitoring system will not work for this wheel, and the control indicator ⓘ will illuminate yellow. The system remains operational for the other three wheels.

If a complete set of wheels that do not have tyre pressure monitoring system sensors is used, (e.g. four winter tyres or retrofitting of a different size tyre) no warning message is displayed. The system is not operational.

Sensors for the tyre pressure monitoring system can be retrofitted. We recommend that you consult your Vauxhall Authorised Repairer.

When manually checking tyre pressure with a pressure gauge, screw the adapter onto the valve. Tyre pressure – see page 215.

The tyre pressure monitoring system valve cores and sealing rings must be replaced each time the tyres are changed. We recommend that you contact your Vauxhall Authorised Repairer.

The use of commercially available liquid filled run-flat systems or repair kits can impair the function of the system. Vauxhall-approved systems can be used.

Radio transmitters (e.g. radio headphones, walkie-talkies) operated in the area could cause interference in the tyre pressure monitoring system.

Downloaded from www.Manualslib.com manuals search engine

Ofrecido por www.electromanuales.com

Brakes

Brake system 210
Anti-lock Brake System (ABS (ABS)) 212

Brake system

The brakes are an important factor for traffic safety.

To improve effectiveness, do not brake unnecessarily hard for the first 125 miles (200 km) after new brake pads have been fitted.

Brake pad wear must not exceed a specified limit. Regular maintenance as detailed in the Service Booklet is therefore of the utmost importance for traffic safety.

Have worn brake pads replaced. We recommend that you consult your Vauxhall Authorised Repairer, who will fit pads that have been tested and approved by Vauxhall and guarantee optimum braking power.

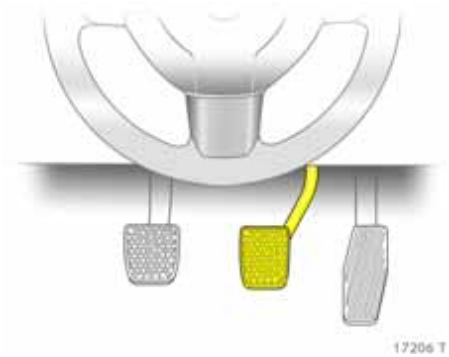

Brake assist
If the brake pedal is slammed on, the vehicle is automatically braked with maximum brake force amplification in order to achieve the shortest possible braking distance when full-on braking occurs (braking assist).

Maintain steady pressure on the brake pedal for as long as full-on braking is to continue. When the brake pedal is released, the maximum brake force amplification is taken away.

Adaptive brake light
During full-on braking, all three brake lights flash for the duration of ABS control.

Downloaded from www.Manualslib.com manuals search engine

Ofrecido por www.electromanuales.com

Foot brake
The foot brake comprises two independent brake circuits.

If a brake circuit fails, the vehicle can still be braked using the other brake circuit. If this occurs, however, the brake pedal must be depressed quite far using considerable force before braking effect occurs. The distance required for braking will be greater. Consult a workshop before continuing your journey. We recommend your Vauxhall Authorised Repairer.

To ensure that full pedal travel – can be utilised, particularly if there is a fault in one of the brake circuits, there must be no mats in the pedal area, see page 187.

When the engine is not running, the support of the brake servo unit disappears once the brake pedal has been depressed once or twice. Braking effect is not reduced, but braking requires significantly greater force. This is especially important to bear in mind when towing.

Check the brake lights before starting out on a journey. On vehicles with check control ✻ the brake lights are checked automatically – see page 58.

Shortly after starting each journey the effectiveness of the brake system should be tested at low speed and without inconveniencing other traffic, especially if the brakes are wet, e.g. after the vehicle has been washed.

The brake fluid level should be checked regularly. If the brake fluid level is too low and the hand brake is not applied, control indicator (!) on the instrument panel illuminates – see page 35.

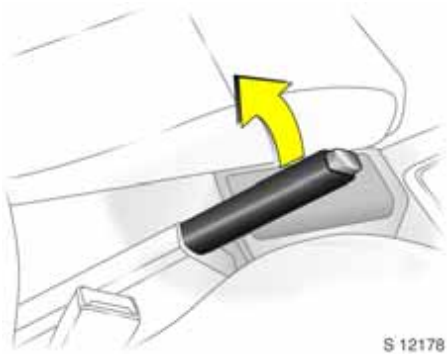

Hand brake
Always apply handbrake firmly, and as firmly as possible on uphill or downhill slopes. Fold up armrest ✻ to do this.

The mechanical hand brake acts on the brakes on the rear wheels. It engages automatically when applied.

To release the hand brake pull the lever up slightly, press the ratchet knob, and fully lower the lever.

To reduce the operating forces of the hand brake, depress the foot brake at the same time.

Downloaded from www.Manualslib.com manuals search engine

Ofrecido por www.electromanuales.com

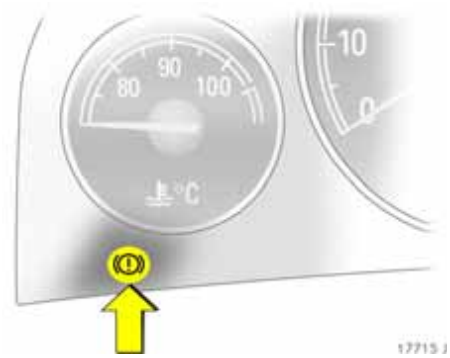

Brake system control indicator
The control indicator illuminates when the ignition is switched on if the hand brake is applied or if the brake or clutch fluid level is too low. Brake fluid – see page 272.

⚠Warning

If the control indicator illuminates when the hand brake is not applied: Stop. Interrupt your journey immediately. Consult a workshop. We recommend your Vauxhall Authorised Repairer.

Anti-lock Brake System (ABS)

ABS continually monitors the brake system and prevents the wheels from locking regardless of the type of road surface or tyre grip.

It starts to regulate the braking pressure as soon as a wheel shows a tendency to lock. The vehicle remains steerable, even in the event of very heavy braking, for instance on bends or when swerving to avoid an obstacle. Even in the case of full-on braking, the ABS makes it possible to drive round an obstacle without releasing the brakes.

ABS control is made apparent though a pulse in the brake pedal and the noise of the regulation process.

⚠Warning

For optimum braking, keep the brake pedal fully depressed throughout the braking process, despite the fact that the pedal is pulsating. Do not reduce the pressure on the pedal.

Do not let this special safety feature tempt you into taking risks when driving.

Traffic safety can only be achieved by adopting a responsible driving style.

Downloaded from www.Manualslib.com manuals search engine

Ofrecido por www.electromanuales.com

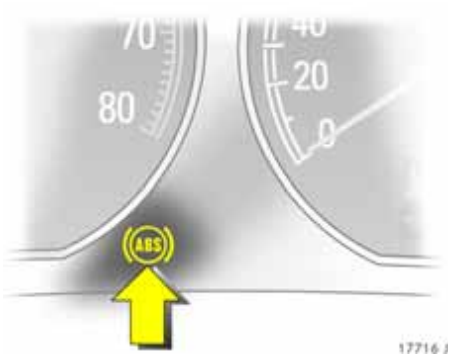

Control indicator (ABS) for ABS
The control indicator illuminates for several seconds when the ignition is switched on and the system undergoes a self-check at the same time (may be audible). The system is ready for operation when the control indicator goes out.

If the control indicator does not go out after a few seconds, or if it illuminates while driving, there is a fault in the ABS. The brake system remains operational without ABS regulation.

⚠Warning

If there is a fault in ABS, the wheels may be subject to locking due to braking that is heavier than normal. The advantages of ABS are no longer operational. The vehicle can no longer be steered and may swerve.

You can continue driving, provided you drive with care and anticipation.

Have the cause of the fault remedied. We recommend that you consult your Vauxhall Authorised Repairer. The system's integrated self-diagnostics allows faults to be quickly remedied.

Downloaded from www.Manualslib.com manuals search engine

Ofrecido por www.electromanuales.com

Wheels, tyres

Tyres 214
Changing tyre/wheel type..... 214
Tyre pressure..... 215
Tyre condition, wheel condition 217
Winter tyres ✻ 219
Wheel trims ✻..... 219
Tyre chains ✻ 219

Tyres

See page 297 for suitable tyres and restrictions.

Tyres fitted in the factory are adapted to the chassis and provide optimum driving comfort and safety.

Changing tyre/wheel type

Before switching to different tyres or wheels, seek advice on the technical possibilities. We recommend that you consult your Vauxhall Authorised Repairer, who will be able to advise you of any necessary modifications.

If tyres of a different size than those fitted at the factory are used, the electronic speedometer may require reprogramming to ensure that the correct speed is displayed.

⚠Warning

Use of unsuitable tyres or wheels may lead to accidents and render the vehicle unroadworthy.

Vehicles with tyre pressure monitoring system ✻

If winter tyres or tyres of a different size are fitted, tyre pressure monitoring system sensors can be retrofitted if so desired. Otherwise, the system will not indicate tyre pressure deviations. We recommend that you consult your Vauxhall Authorised Repairer.

Tyre pressure monitoring system ✻ – see page 206.

Downloaded from www.Manualslib.com manuals search engine

Ofrecido por www.electromanuales.com

Fitting new tyres
Fit tyres in pairs or in sets, which is even better. Ensure that tyres on one axle are
- the same size,
- the same design,
- the same make,
- and have the same tread pattern.

Fit directional tyres such that they roll in the direction of travel. The rolling direction is indicated by a symbol (e.g. an arrow) on the sidewall.

Tyres fitted opposing the rolling direction (e.g. when a tyre is changed) should be refitted as soon as possible. This is the only way to obtain full benefit from the design properties of the tyre.

⚠Warning

We recommend that you have your tyres changed by your Vauxhall Authorised Repairer, who will be familiar with the requirements of the law as regards disposal of tyres and can thus help to protect the environment and your health.

Some brands of tyres have a beaded edge for alloy wheels to protect against damage. If wheel trim is used on steel wheels with beaded-edge tyres, the following procedure must be followed:

- Use wheel trims and tyres that are approved by Vauxhall for the vehicle in question and therefore meet all the requirements pertaining to the respective wheel/tyre combination.
- If the wheel trims and tyres used are not Vauxhall-approved, the tyres must not have a beaded edge.

⚠Warning

Use of unsuitable tyres or wheel trims could lead to sudden loss of air and thereby accidents.

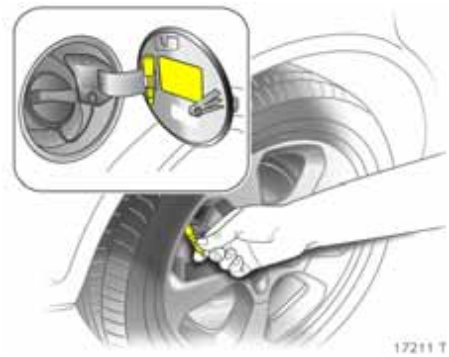

Tyre pressure

Check tyre pressures, including the spare wheel, at least every 14 days and prior to any long journey; the tyres should be checked when cold. Don't forget to check the spare.

Use the valve cap key to make unscrewing the valve caps easier. The key is located on the inside of the tank flap.

►

Downloaded from www.Manualslib.com manuals search engine

Ofrecido por www.electromanuales.com

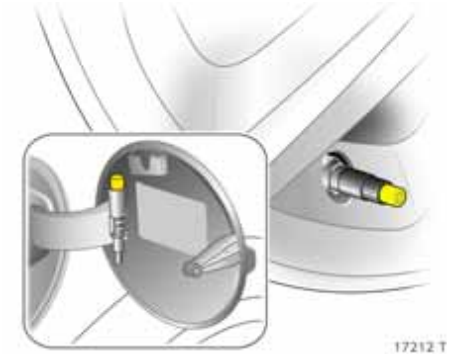

In vehicles with tyre pressure monitoring system ✻ there is an adapter in the valve cap key. Screw adapter to valve before attaching tyre pressure gauge, see page 206.

Tyre pressure – see page 299 and the adhesive foil on the inside of the tank flap. Have adhesive foil replaced after changing to different tyre size.

Do not reduce tyre pressure when the tyres are warm. Otherwise the pressure may drop below the permissible minimum when the tyres cool down.

After having checked the tyre pressures, tighten the valve caps using the valve cap key.

Incorrect inflation pressures will impair safety, vehicle handling, comfort and fuel economy and will increase tyre wear.

If the pressure is too low, this can result in considerable tyre warm-up and internal damage, leading to tread separation and even to tyre blow-out at high speeds.

Hidden tyre damage is not eliminated by adjusting the inflation pressure.

⚠Warning

Incorrect tyre pressure could lead to a flat tyre.

Downloaded from www.Manualslib.com manuals search engine

Ofrecido por www.electromanuales.com

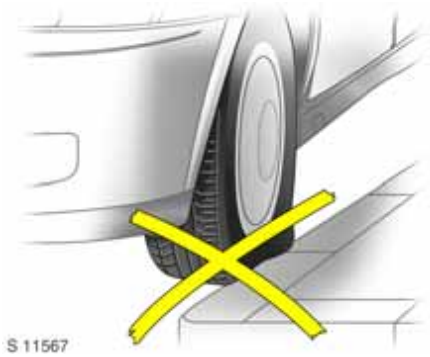

Tyre condition, wheel condition

Drive over edges slowly and at a right angle if possible. Driving over sharp edges can lead to hidden tyre damage and wheel damage which is only noticed later on.

When parking, ensure that the tyres are not pressed against the edge of the kerb.

Check tyres regularly for damage (foreign bodies, punctures, cuts, cracks, bulges in sidewalls). Check wheels for damage. In the event of damage or abnormal wear, consult a workshop. We recommend your Vauxhall Authorised Repairer.

⚠Warning
Damage may lead to tyre blow-out.

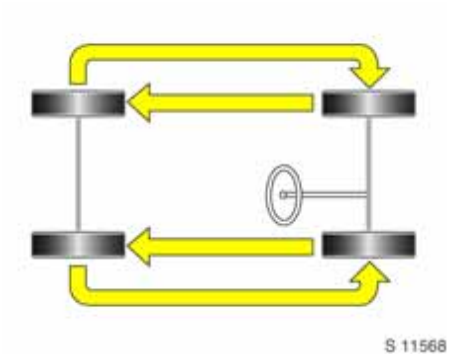

Tread depth
Check tread depth regularly.

If wear in the front is greater than that in the rear, move the rear wheels to the front axle and vice versa.

Correct tyre pressure.

For reasons of safety, tyres should be replaced when their tread depth has worn down to 2 to 3 mm (winter tyres: 4 mm).

Downloaded from www.Manualslib.com manuals search engine

Ofrecido por www.electromanuales.com

The legally permissible minimum tread depth (1.6 mm) has been reached when the tread has worn down as far as one of the wear indicators (TWI[1]). A number of wear indicators are spaced at equal intervals around the tyre within the tread. Their position is indicated by markings on the tyre sidewall.

[1] **TWI** = **T**read **W**ear **I**ndicator.

General information

- The danger of aquaplaning is greater if the tyres are worn.
- Tyres age, even if they are used only very little or not at all. A spare wheel which has not been used for six years should be used only in emergencies; drive slowly when using such tyres.
- Never fit used tyres the previous history and use of which you do not know.
- So as not to impair brake cooling, use only wheel trims approved for use on your vehicle.

Tyre designations
Meanings:

e.g. **195/65 R 15 91 H**

195 = Tyre width in mm
65 = Aspect ratio (tyre height to tyre width) in %
R = Belt type: **R**adial
15 = Rim diameter in inches
91 = Load index e.g.: 91 represents 618 kg
H = Speed code

Speed code letters:

Q Up to 100 mph (160 km/h)
S Up to 112 mph (180 km/h)
T Up to 118 mph (190 km/h)
H Up to 130 mph (210 km/h)
V Up to 150 mph (240 km/h)
W Up to 168 mph (270 km/h)

Downloaded from www.Manualslib.com manuals search engine

Ofrecido por www.electromanuales.com

Winter tyres ✻

For notes on fitting new tyres – see page 215.

See page 299 for restrictions.

Winter tyres improve safety at temperatures below 7 °C and should therefore be fitted on all the wheels.

The design of summer tyres means they have limited qualities for winter driving.

If the maximum permissible speed for the winter tyres is less than that of the vehicle, a notice indicating the maximum permissible speed for the tyres must be affixed within the driver's field of vision[1].

If you use the spare wheel when it is fitted with a summer tyre, the vehicle's driveability may be affected, especially on slippery road surfaces. Obtain a replacement for the faulty tyre as soon as possible, and have the wheel balanced and fitted to the vehicle.

Wheel trims ✻

If the wheel trims and tyres used are not Vauxhall-approved, make sure that the tyres do not have a beaded edge, see page 215.

[1] Varies from country to country on account of national regulations.

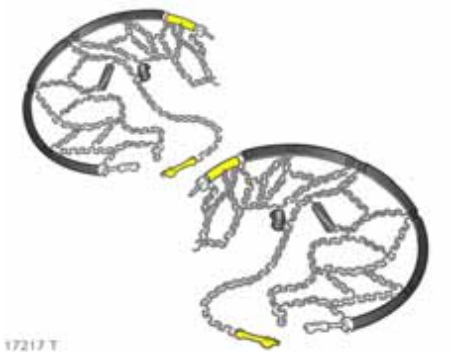

Tyre chains ✻

Limitations and further information – see page 299.

Tyre chains are only permitted on the drive wheels (front axle).

Always use fine mesh chains that add no more than 10 mm to the tyre tread and the inboard sides (including chain lock).

We recommend that you consult your Vauxhall Authorised Repairer.

Wheel trim on steel wheels could come into contact with parts of the chain and be damaged. Remove the wheel trim – see page 239.

Tyre chains may only be used at speeds up to 30 mph (50 km/h)[1]. When driving on roads that are free of snow, they may only be used for brief periods since they are subject to rapid wear on hard roads and could snap.

Temporary wheel ✻
Tyre chains must not be used on the temporary spare wheel. If you need to use tyre chains after suffering a flat front tyre, fit the temporary spare on the rear axle and transfer one of the rear wheels to the front axle.

For notes on the temporary spare wheel – see page 237.

Wheel changing – see page 238.

Correct tyre pressure. Tyre pressure monitoring system ✻ – see page 206.

Downloaded from www.Manualslib.com manuals search engine

Ofrecido por www.electromanuales.com

Roof Racks, Caravan and Trailer Towing

Roof racks ✻ 220
Towing equipment ✻ 221
Towing equipment with removable coupling ball bar ✻, Saloon / hatch✻ 221
Towing equipment with pivoting coupling ball bar ✻ 224
Caravan and trailer loads 225
Coupling socket load 226
Rear axle load during towing 226
Tyre pressure 226
Trailer Stability Assist ✻ (TSA) 226
Driving characteristics, towing tips 227
Starting on inclines 228

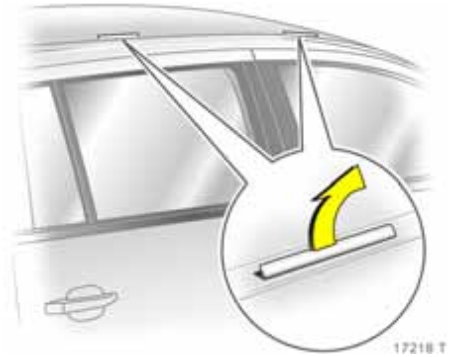

⚠Warning

Disregard of these notes can lead to injuries which may be fatal. Vehicle passengers should be informed accordingly.

Roof racks ✻

For reasons of safety and to avoid damaging the roof, we recommend that you use the Vauxhall roof rack system approved for your vehicle. Consult your Vauxhall Authorised Repairer.

Fasten the roof rack following the instructions that accompany the system.

Driving hints – see page 186.

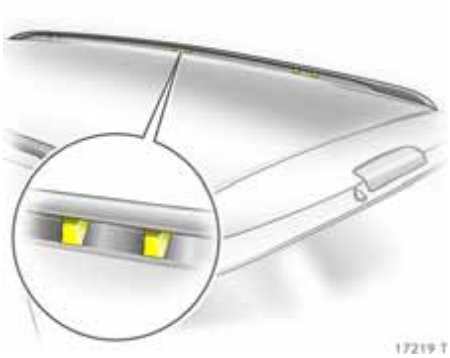

Version without roof railing
Fold the covers of the installation openings up - see Fig. 17218 T.

Attach roof rack at appropriate points, see enclosed roof luggage rack system instructions.

Version with roof railing ✻
Attach roof rack to roof railing at points shown in figure, see enclosed roof luggage rack system instructions.

Downloaded from www.Manualslib.com manuals search engine

Ofrecido por www.electromanuales.com

Towing equipment ✻

Use only towing equipment that has been approved for your vehicle. We recommend entrusting the retrofitting of towing equipment to your Vauxhall Authorised Repairer, who will advise you on any possible towed load increases. Your Vauxhall Authorised Repairer has instructions on how to install the towing equipment and make any necessary changes to the vehicle that affect the cooling system, the heat shields or other equipment.

⚠Warning

The coupling ball bar is to be removed when not towing.

For installation dimensions of the trailer towing equipment – see pages 311, 311.

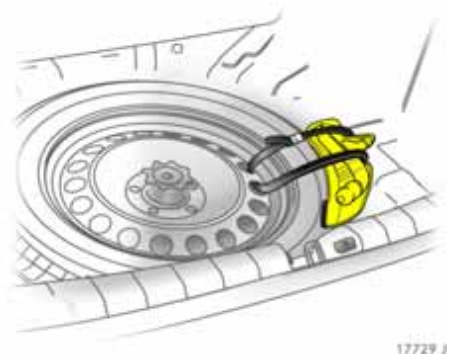

Towing equipment with removable coupling ball bar ✻, Saloon / hatch✻

Stowage of coupling ball bar

The coupling ball bar is stored in a bag strapped to the spare wheel.

Fitting the coupling ball bar

Compress the sealing plugs at the ends and pull out of the opening for the coupling ball bar. Stow the sealing plugs in the luggage compartment. Disengage socket and fold down ✻.

►

Downloaded from www.Manualslib.com manuals search engine

Ofrecido por www.electromanuales.com

Checking the tensioning of the coupling ball bar

- Red marking on turn knob points towards green marking on coupling ball bar.
- Gap of approx. 6 millimetres between rotary knob and coupling ball bar.
- Key is in lock.

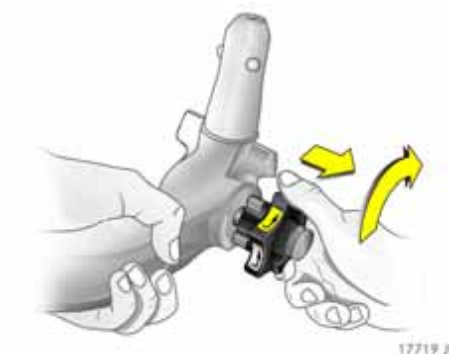

Otherwise, the coupling ball bar must be tensioned before it is inserted into the coupling housing:

- Open coupling ball bar.
- Pull turn knob out and then turn it clockwise as far as it will go – see figure.

Inserting the coupling ball bar

Insert the tensioned coupling ball bar into the coupling housing and push firmly upwards until the coupling ball bar engages in position.

The turn knob snaps back into its home position resting against the coupling ball bar.

⚠Warning

Do not touch the turn knob when inserting the coupling ball bar – risk of injury.

Downloaded from www.Manualslib.com manuals search engine

Ofrecido por www.electromanuales.com

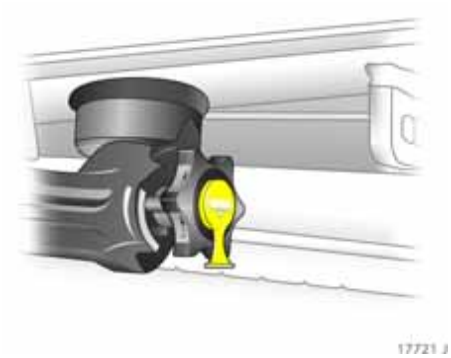

Open coupling ball bar. Remove key and put on provided protective clip.

When the coupling ball bar is locked the turn knob can no longer be pulled out.

Important
Check that the coupling ball bar is correctly installed:

- Red marking on turn knob points towards white marking on coupling ball bar.
- No gap between turn knob and coupling ball bar.
- Coupling ball bar must be seated firmly in coupling housing.
- Coupling ball bar must be locked and key must be removed.

⚠Warning

Towing a caravan/trailer is only permitted with a properly attached coupling ball bar. If the coupling ball bar cannot be properly attached, consult a workshop. We recommend your Vauxhall Authorised Repairer.

Eye for break-away stopping cable
In the case of caravans/trailers with brake, attach the break-away stopping cable to the eye. Eye - see Fig. 17721 J.

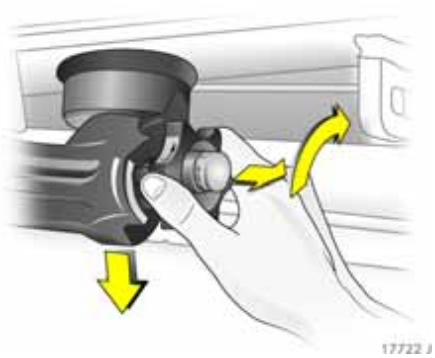

Dismounting the coupling ball bar
Close coupling ball bar.

Pull the turn knob out and then turn it clockwise as far as it will go. Pull the coupling ball bar downwards out of the coupling housing and stow it in the luggage compartment – see page 221, Fig. 17729 J.

Insert the sealing plug in the hole for the coupling ball bar. Fold away the socket – see page 221, Fig. 17717 J.

Do not use steam-jet cleaners or other high-pressure cleaners to clean the coupling ball bar.

Downloaded from www.Manualslib.com manuals search engine

Ofrecido por www.electromanuales.com

Towing equipment with pivoting coupling ball bar ✻

Folding out the coupling ball bar
The release lever is in the stowage compartment to the left in the luggage compartment.

To open the stowage compartment, push both latches down and open the cover.

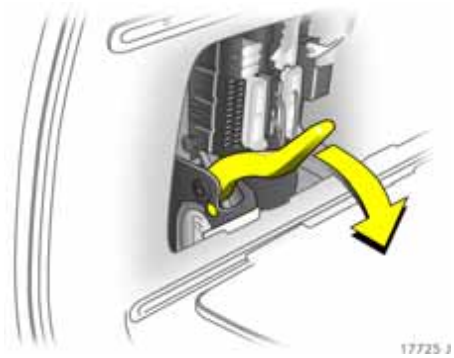

Push the release lever down; the LED on the lever remains illuminated as long as the coupling ball bar is not engaged. A warning buzzer also sounds and the coupling ball bar pivots down.

⚠Warning

Make sure that no one is in the pivot zone of the coupling ball bar. Risk of bodily injury.

Swivel the coupling ball bar rearwards until it engages (see figure 17726 J). The LED must go out and the warning buzzer must cease. Otherwise, repeat the procedure.

Important
Check that the coupling ball bar is correctly engaged:

- LED is not illuminated
- No warning buzzer

⚠Warning

Towing is only permissible if the coupling ball bar is fitted properly. If the coupling ball bar does not engage correctly, the LED does not go out or the warning buzzer does not stop sounding, consult a workshop. We recommend your Vauxhall Authorised Repairer.

Downloaded from www.Manualslib.com manuals search engine

Ofrecido por www.electromanuales.com

Trailer with break-away cable ✻
For trailers with brake, loop break-away cable around coupling ball bar.

Stowing the coupling ball bar
Open the stowage compartment – see page 224.

Push the release lever down; the LED on the lever remains illuminated as long as the coupling ball bar is not engaged. A warning buzzer also sounds and the coupling ball bar pivots down.

Pivot the coupling ball bar to the right and up. The LED must go out and the warning buzzer must cease, otherwise repeat the procedure.

Caravan and trailer loads[1)]

The permissible caravan/trailer loads are vehicle- and engine-dependent maximum values which must not be exceeded. The actual caravan/trailer load is the difference between the actual gross weight of the caravan/trailer and the actual coupling socket load with the caravan/trailer attached. When the caravan/trailer load is being checked, therefore, only the caravan/trailer wheels – and not the jockey wheel – must be standing on the weighing apparatus.

The permissible caravan/trailer loads for your vehicle are given in the vehicle documents. Unless otherwise stated, they are valid for gradients up to max. 12%.

[1)] Observe national regulations.

Downloaded from www.Manualslib.com manuals search engine

Ofrecido por www.electromanuales.com

The permissible caravan/trailer load should be fully utilised only by drivers who are adequately experienced in towing large or heavy caravans/trailers.

The permitted caravan/trailer load applies up to the specified incline and up to an altitude of 1000 metres above sea level. Since engine power decreases as altitude increases because of the air becoming thinner, therefore reducing climbing ability, the permitted towing weight also decreases by 10% for every 1000 metres of additional altitude. The towing weight does not have to be reduced when driving on roads with slight inclines (less than 8%, e.g. motorways).

The actual caravan/trailer load plus the actual gross weight of the towing vehicle must not exceed the maximum permitted towing weight. For example, if the permitted gross vehicle weight is utilised, the trailer/caravan load must only be used until the maximum permitted towing weight is reached. The maximum permitted towing weight is shown on the identification plate, see page 282.

Coupling socket load

The coupling socket load is the load exerted by the trailer/caravan on the coupling ball. It can be varied by changing the weight distribution when loading the trailer/caravan.

The maximum permissible coupling socket load (Saloon / hatch: 78 kg, Estate: 85 kg) is specified on the towing equipment identification plate and in the vehicle documents. Always aim for the maximum load, especially in the case of heavy caravans/trailers. The coupling socket load should never fall below 25 kg.

When measuring the coupling socket load, make sure that the drawbar of the loaded trailer/caravan is at the same height as it will be when the trailer/caravan is coupled with the towing vehicle loaded. Particularly important for trailers/caravans with tandem axle.

Rear axle load during towing

With the caravan/trailer coupled and the towing vehicle fully loaded (including all occupants), the permissible rear axle load (see identification plate or vehicle documents) may be exceeded by 40 kg. If the permissible rear axle load is exceeded, a maximum speed of 60 mph (100 km/h) applies. If national regulations specify a slower maximum speed for vehicles towing a caravan/trailer, this must be observed.

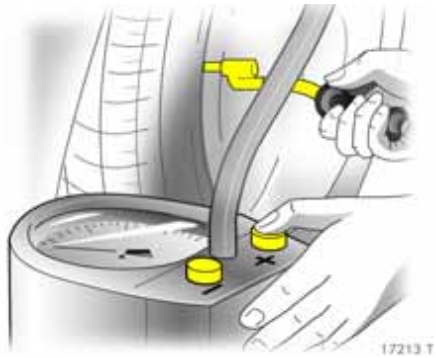

Tyre pressure

Adjust the tyre pressure on the towing vehicle to the value specified for a full load, see page 299. Also check the pressure of the caravan/trailer wheels and the spare wheel.

Trailer Stability Assist ✻ (TSA)

TSA monitors vehicle movements when towing a caravan or trailer. If the system detects lurching movements, engine power is reduced and the vehicle/trailer combination is selectively braked until the lurching ceases.

Downloaded from www.Manualslib.com manuals search engine

Ofrecido por www.electromanuales.com

Driving characteristics, towing tips

For trailers with brake, attach break-away cable to eye ✻ or loop around coupling ball bar if no eye available.

Before attaching the trailer/caravan, lubricate the ball of the trailer/caravan towing device. However, do not lubricate the ball if a stabiliser, which acts on the coupling ball, is being used to damp hunting.

Check caravan/trailer lighting before starting to drive. The fog tail lights on the vehicle are deactivated when towing a caravan or trailer.

Caravan/trailers with LED turn signals must have a provision that makes it possible to monitor standard light bulbs.

Turn signal control indicator – see page 34.

The parking distance sensor system at the rear ✻ is deactivated when towing a caravan/trailer.

Handling is greatly influenced by the loading of the trailer/caravan. Loads should therefore be secured so that they cannot slip and be placed in the centre of the trailer/caravan if possible, i.e. above the axle.

In the case of trailers with low driving stability or caravans with a permitted gross vehicle weight of 1400 kg (Saloon / hatch) / 1500 kg (estate), do not exceed a speed of 50 mph (80 km/h); the use of a friction-type stabiliser is highly recommended.

Do not drive faster than 50 mph (80 km/h) if possible, even in countries where higher speeds are permitted.

Make sure that you have enough room when cornering and avoid sudden manoeuvres.

If the trailer/caravan starts to sway, drive more slowly, do not attempt to correct the steering and brake sharply if necessary.

If it is necessary to apply the brakes fully, depress the brake pedal as hard as possible.

Remember that the braking distance for vehicles towing caravans/trailers with and without brake is always greater than that for vehicles not towing a caravan/trailer.

When driving downhill, the brakes are under considerably more load when towing a caravan/trailer. For this reason, drive in the same gear as if driving uphill and drive at a similar speed.

Automatic transmission ✻ or Easytronic ✻ in automatic mode will automatically select the driving programme with the optimum engine braking effect.

Downloaded from www.Manualslib.com manuals search engine

Ofrecido por www.electromanuales.com

If necessary, the gears can also be selected manually.

The cooling fan is electrically operated. Its cooling power is therefore independent of the engine speed.

Since a considerable amount of heat is generated at high engine speeds and less at slower speeds, do not shift down when climbing hills whilst the vehicle is still coping with the gradient in the higher gear.

Diesel engine: On rising gradients of 10% or more, do not drive faster than 20 mph (30 km/h) in 1st gear or 30 mph (50 km/h) in 2nd gear; with automatic transmission ✻, do not exceed 25 mph (40 km/h) in position **1**.

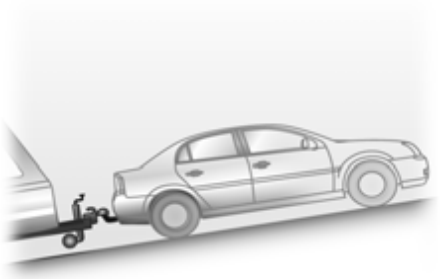

17730 J

Starting on inclines

For vehicles with manual transmission, the most favourable engine speed when starting off on an incline is between 2500 and 3000 rpm for petrol engines and between 2000 and 2200 rpm for diesel engines. Hold engine speed constant, engage clutch gradually (let slip), release hand brake and open throttle. If possible, the engine speed should not drop during this procedure.

For vehicles with automatic transmission ✻ or Easytronic ✻ in automatic mode it is sufficient to apply full throttle.

Before starting off under extreme conditions (high combination weight, mountainous terrain with steep inclines), switch off all unnecessary electrical loads (e.g. heated rear window, air conditioning system ✻, heated seats ✻).

Downloaded from www.Manualslib.com manuals search engine

Ofrecido por www.electromanuales.com

Self-help

Starting the engine with jump leads ✻ 230
Towing the vehicle 232
Towing service 233
Towing another vehicle 233
Warning triangle ⚠✻, First-aid kit ⊕✻ 234
Spare wheel ✻ 236
Jack ✻ and vehicle tools ✻ 238
Changing wheels 238
Tyre repair kit ✻ 242
Electrical system 246
Fuses and the most important circuits they protect 248
Bulb replacement 252
Halogen headlight system dipped and main beam 253
Xenon headlight system, dipped and main beam 255
Adaptive Forward Lighting System ✻ 257
Halogen headlight system, Xenon headlight system, Parking lights 257
Tail lights 258
Number plate light 261
Courtesy light 262

⚠Warning

Disregard of these notes can lead to injuries which may be fatal. Vehicle passengers should be informed accordingly.

Diesel fuel system, bleeding

Never let the tank run dry! If control indicator ⛽ illuminates, refuel as soon as possible. Refuel immediately if it flashes.

It is possible to restart the engine if the tank has been run dry. A delayed start is to be expected. Switch on the ignition three times for approx. 15 seconds. Then attempt to start the engine for no more than 40 seconds. If the engine does not start, wait at least 5 seconds and try again. If the engine does not start, consult a workshop. We recommend your Vauxhall Authorised Repairer.

Starting

Do not start with quick charger
This prevents damage to electronic components.

Do not start by pushing or towing
Because your vehicle is fitted with a catalytic converter, it must not be started by pushing or towing – see page 193.

The vehicle can only be started using jump leads – see following page.

Downloaded from www.Manualslib.com manuals search engine

Ofrecido por www.electromanuales.com

Starting the engine with jump leads ✻

A vehicle with a discharged battery can be started using jump leads and the battery of another vehicle.

⚠Warning

Be extremely careful when starting with jump leads. Any deviation from the following instructions can lead to injuries or damage caused by battery explosion or damage to the electrical systems of both vehicles.

- Never expose the battery to naked flames or sparks.
- A discharged battery can freeze at temperatures of around 0 °C. Always thaw out a frozen batteries in a warm room before attaching jump leads.
- Do not allow battery fluid to come into contact with eyes, skin, fabrics or painted surfaces. The fluid contains sulphuric acid which can cause injuries and damage in the event of direct contact.

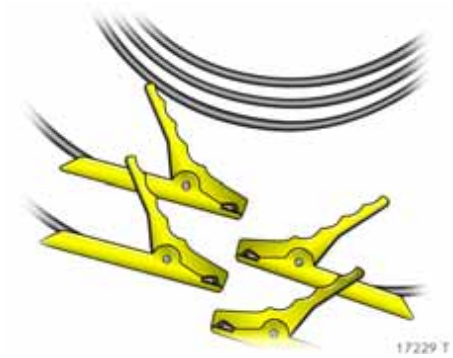

- Wear eye protection and protective clothing when handling a battery.
- Use auxiliary battery with same voltage (12 volts). Its capacity (Ah) must not be considerably less than that of the discharged battery. Voltage and capacity information can be found on the batteries.
- Use jump leads with insulated terminals and a cross section of at least 16 mm^2 (25 mm^2 for diesel engines).
- Do not disconnect the discharged battery from the vehicle.

- Switch off all unnecessary electrical consumers.
- Do not lean over the battery during jump starting.
- Do not allow the terminals of one lead to touch those of the other lead.
- Do not touch the vehicles while jump starting.
- Apply hand brake. Manual transmission or Easytronic ✻ in neutral, automatic transmission ✻ in **P**.

The battery is in a box at the front of the engine compartment, on the right-hand side as viewed from the front. To open the box, pull the cover forwards and swing it upwards.

Downloaded from www.Manualslib.com manuals search engine

Ofrecido por www.electromanuales.com

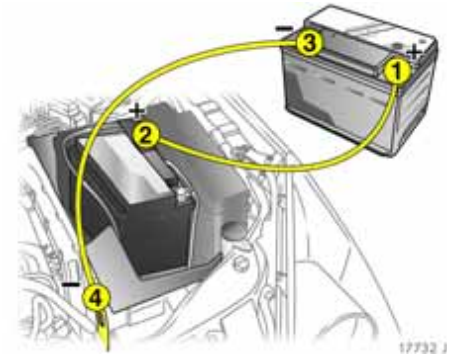

Connect the leads in the order shown in the illustration:

1. Connect one end of the first jump lead to the positive terminal **1** of the battery providing the jump start (identified by "+" sign on battery case or terminal).
2. Connect the other end of this lead to the positive terminal **2** of the discharged battery ("+" sign).
3. Connect the first end of the other jump lead to the negative terminal **3** of the battery providing the start ("–" sign).
4. Connect the other end of the second jump lead **4** to ground on the other vehicle, e.g. engine block or screw connection in the engine suspension.

- Do not connect leads to negative terminal of discharged battery!
- The connection point should be as far away from the discharged battery as possible.
- Route the leads so that they cannot catch on rotating parts in the engine compartment.
- Start the engine of the vehicle providing the jump start.
- After 5 minutes, start the other engine. Start attempts should be made at intervals of 1 minute not last longer than 15 seconds.
- After starting, allow both engines to idle for approx. 3 minutes with the leads connected.
- In order to avoid excess voltage in the electrical system, before removing a lead, switch on an electrical consumer (e.g. light, heated rear window) in the vehicle receiving the jump start.
- Reverse above sequence exactly when removing leads.

Downloaded from www.Manualslib.com manuals search engine

Ofrecido por www.electromanuales.com

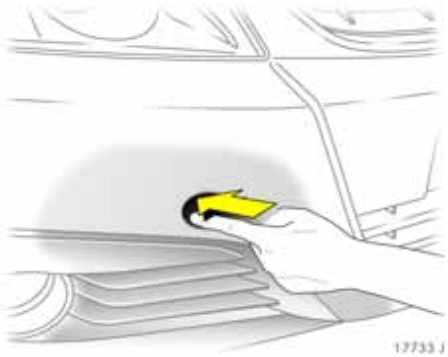

Towing the vehicle

To open the cover concealing the towing eye at the front right of the vehicle: disengage the cover at the bottom and pull it off downwards.

The towing eye is located in the compartment containing the jack and vehicle tools underneath the spare wheel in the luggage compartment. Vehicle jack and tools – see page 238.

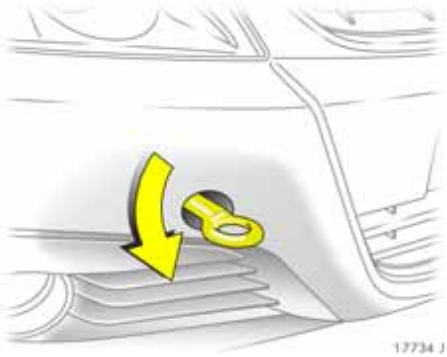

Screw in the towing eye anticlockwise as far as it will go until it stops in a horizontal position.

Attach a tow rope ✻ – or better still a tow rod ✻ – to the eye.

The towing eye must only be used for towing and not recovering a vehicle.

Switch on ignition to release steering column lock and to permit operation of brake lights, horn and windscreen wiper.

Manual transmission or Easytronic ✻ in neutral, automatic transmission ✻ in **N**.

Drive slowly. Do not drive jerkily. Excessive tractive force can damage the vehicle.

⚠Warning

Significantly greater force is required for braking: the brake servo unit is only operational when the engine is running.

Considerably greater steering force is necessary since this unit is operative only when the engine is running.

To prevent the entry of exhaust fumes from the towing vehicle, switch on the air recirculation ✻ and close the windows.

Vehicles with automatic transmission ✻ should be towed facing forward only and must not be towed faster than 50 mph (80 km/h) or further than 60 miles (100 km). If the transmission is defective, or if the above speed or distance is to be exceeded, the front axle must be raised off the ground.

Downloaded from www.Manualslib.com manuals search engine

Ofrecido por www.electromanuales.com

Consult a workshop. We recommend your Vauxhall Authorised Repairer, who will serve you best to get your vehicle back on the road.

If the automatic clutch has been manually released in vehicles with Easytronic ✻ because of an interruption to the power supply, towing is not permitted – see page 176. In this case, consult a workshop as soon as possible. We recommend your Vauxhall Authorised Repairer.

After towing, unscrew towing eye by rotating clockwise and insert and close the cap.

Towing service

Entrust your vehicle only to the towing service of your choice and obtain an estimate on towing costs before employing any towing service. In this way you avoid unnecessary costs and possible insurance problems during claim processing.

Towing another vehicle

To open the cover concealing the towing eye socket at the rear right of the vehicle: disengage the cover at the bottom and pull it off downwards.

The towing eye is located in the compartment containing the jack and vehicle tools underneath the spare wheel in the luggage compartment. Vehicle jack and tools – see page 238.

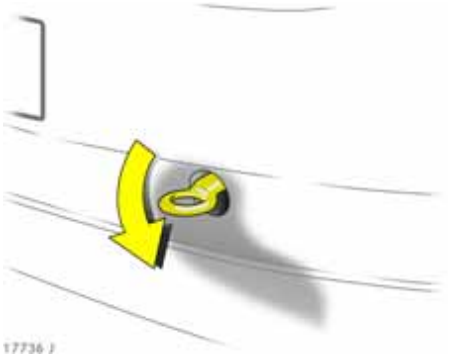

Screw in the towing eye anticlockwise as far as it will go until it stops in a horizontal position.

Attach a tow rope ✻ – or better still a tow rod ✻ – to the eye.

Drive slowly. Do not drive jerkily. Excessive tractive force can damage the vehicle.

After towing, unscrew towing eye by rotating clockwise and insert and close the cap.

Downloaded from www.Manualslib.com manuals search engine

Ofrecido por www.electromanuales.com

Warning triangle ⚠✻, First-aid kit ⊕✻

Saloon / hatch

The warning triangle and first-aid kit/ cushion are stowed in the side panel trim on the left-hand side.

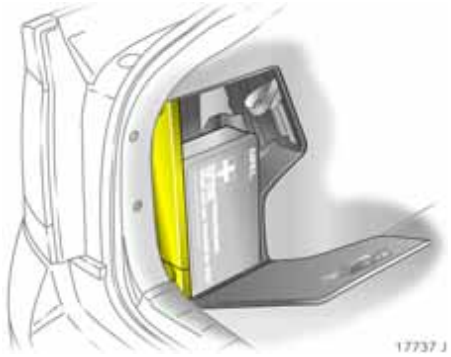

To access press down bar and open the cover.

Depending on the warning triangle version, move locking lever upward and therefore clamp warning triangle in position.

When loading vehicle, always ensure that first-aid cushion or first-aid kit is accessible.

Downloaded from www.Manualslib.com manuals search engine

Ofrecido por www.electromanuales.com

Estate
The warning triangle and first-aid kit/ cushion are stowed in the side panel trim on the left-hand side.

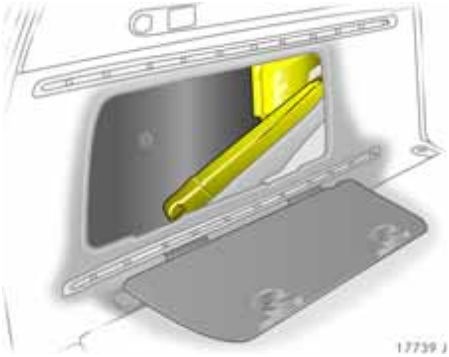

To open, push both bars down and open the flap.

When loading vehicle, always ensure that warning triangle and first-aid cushion or first-aid kit are accessible.

Downloaded from www.Manualslib.com manuals search engine

Ofrecido por www.electromanuales.com

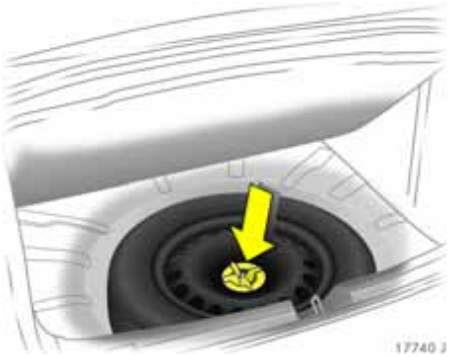

Spare wheel ✻

Some vehicles are equipped with a tyre repair kit instead of a spare wheel. See page 242.

Saloon / hatch

The spare wheel is located in the luggage compartment under the floor cover. It is secured with a plastic wing nut.

To open the floor cover, pull up the handle or strap.

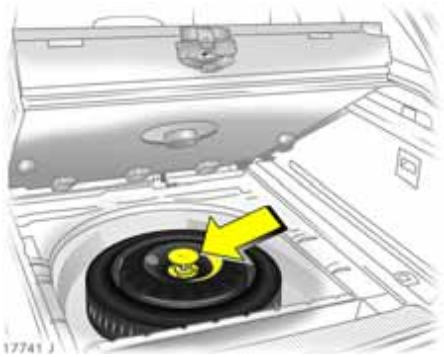

Estate

The spare wheel is located in the luggage compartment under the load floor. It is secured with a plastic wing nut.

To open the loading floor, fold out release lever by pushing at the marked point and raise up the loading floor all the way.

Stowing standard size tyres in the spare wheel well

The spare wheel well is not designed for all sizes of commercially available tyres. If a larger wheel must be stowed in the spare wheel well after changing wheels, place the floor cover on the overlaying wheel.

Downloaded from www.Manualslib.com manuals search engine

Ofrecido por www.electromanuales.com

General information
Depending on the version, the spare wheel is in the form of an temporary spare wheel ✻. Please pay attention to instructions concerning temporary spare wheel in the next column and on pages 219, 242, 299.

On vehicles with alloy wheels ✻ the spare wheel may have a steel rim.

If you use winter tyres ✻, the spare wheel may still be fitted with a summer tyre. If you use the spare wheel the vehicle's handling may be altered. Obtain a replacement for the faulty tyre as soon as possible, and have the wheel balanced and fitted to the vehicle.

The spare wheel may have a smaller tyre and a smaller rim than the wheels mounted on the vehicle[1]: Using the spare wheel may alter vehicle handling. Have the defective tyre replaced as soon as possible, balance the wheel and have it mounted on the vehicle.

[1] Country-specific version: The spare wheel is only to be used as a temporary spare wheel.

Notes on temporary spare wheel ✻

- Using a temporary spare wheel may change the driving behaviour of the vehicle, particularly if using winter tyres ✻. Replace defective tyre as quickly as possible, balance wheel and fit to vehicle.
- Fit only one temporary spare wheel.
- Do not drive faster than 50 mph (80 km/h).
- Take curves slowly.
- Do not use the temporary spare wheel for a lengthy period.
- Replace temporary spare wheel with full specification wheel without delay.
- Tyre chains are not permitted on the temporary spare wheel. If tyre chains have to be used after a front wheel puncture, fit temporary spare wheel to the rear axle and fit a rear wheel to the front axle. Check tyre pressure and correct if necessary, see page 299.
- Please follow instructions concerning temporary spare wheel on pages 219 and 299.

Notes on directional tyres ✻
Directional tyres only achieve their full performance potential when mounted in the prescribed direction of rotation. If after a flat tyre the tyre or spare wheel is mounted against the prescribed direction of rotation, observe the following:

- Driving conditions may be altered. Replace the defective tyre as soon as possible, balance the wheel and mount it on the vehicle.
- Do not drive faster than 50 mph (80 km/h).
- Drive especially carefully in wet or snowy weather.

For further information on directional tyres – see page 215.

Downloaded from www.Manualslib.com manuals search engine

Ofrecido por www.electromanuales.com

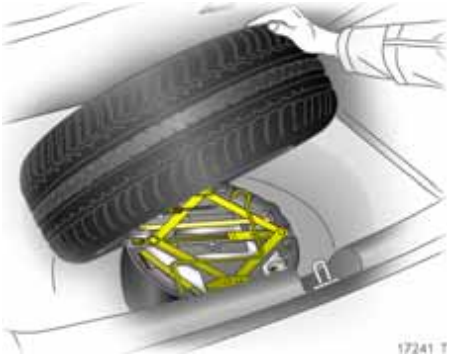

Jack ✻ and vehicle tools ✻

The jack and the vehicle tools have been specially developed for your vehicle and must only be used on that vehicle. Only use jack for changing wheels.

Vehicles with spare wheel ✻: The jack and vehicle tools are stowed in a compartment in the luggage compartment beneath the spare wheel. Remove the spare wheel - see page 236.

Vehicles with tyre repair kit ✻: The vehicle tools are stowed together with the tyre repair kit in a compartment beneath the floor cover in the luggage compartment.

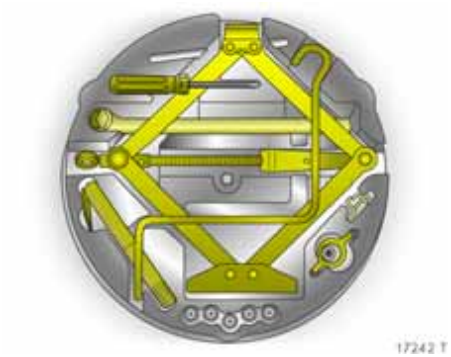

After use, stow away the jack and tools in the compartment as shown in illustration.

Changing wheels

There may be a tyre repair kit instead of a spare wheel – see page 242.

To ensure your safety, make the following preparations and observe the following information when changing wheels:

- Park the vehicle on a level, firm and non-skid surface.
- Switch on hazard warning lights, apply hand brake, automatic transmission ✻ - selector lever in **P**, manual transmission or Easytronic ✻ - engage 1st or reverse gear.
- Correctly set up the warning triangle. Warning triangle – see page 234.

Downloaded from www.Manualslib.com manuals search engine

Ofrecido por www.electromanuales.com

- Take the spare wheel from the luggage compartment.
- Before raising the vehicle, set the front wheels to the straight-ahead position.
- Slacken the wheel bolts one half turn before raising the vehicle, but do not totally unscrew the bolts.
- Never change more than one wheel at once.
- Block the wheel diagonally opposite the wheel to be changed by placing wedge blocks or equivalent in front and behind the wheel.
- Use the jack only to change wheels.
- If the ground on which the vehicle is standing is soft, a solid board (max. 1 cm thick) should be placed under the jack. Using a thicker board could damage the jack and the vehicle.
- Apply a light coating of grease to the cone of each wheel bolt before screwing in the wheel bolts after a wheel change. Some normal commercial grease will be required for this purpose. We recommend your Vauxhall Authorised Repairer.
- No people or animals may be in the vehicle when it is jacked up.
- Never crawl under a jacked-up vehicle.
- Do not start or run the engine while the vehicle is on the jack.
- Fully tighten the wheel bolts after lowering the vehicle all the way.

1. Prise off the wheel trim using the hook included with the vehicle tools ✻. For vehicle tools, see page 238.

   If the wheel trim has visible wheel bolts ✻, the trim can remain on the wheel. The retaining washers ✻ on the wheel bolts must not be removed.

Downloaded from www.Manualslib.com manuals search engine

Ofrecido por www.electromanuales.com

Alloy wheels ❇: Disengage the wheel bolt caps with a screwdriver and remove. Protect the wheel by inserting a soft cloth between the screwdriver and ally wheel.

2. Slacken wheel bolts using wheel bolt wrench ❇, putting on the wheel bolt wrench ❇ as far as possible.

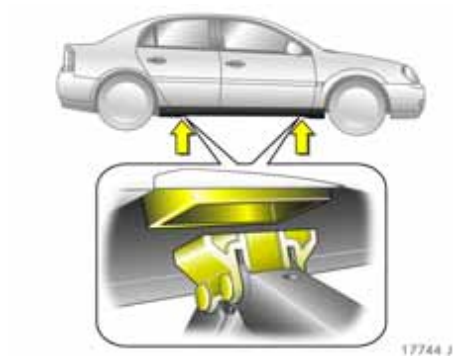

3. There are plastic retainers at the front and rear of the vehicle underbody for positioning the jack. The location of each retainer is indicated by a mark on the bottom edge of the vehicle.

Downloaded from www.Manualslib.com manuals search engine

Ofrecido por www.electromanuales.com

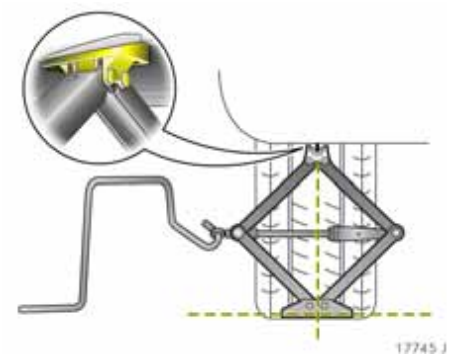

4. Before attaching jack ✻ set to required height by turning the eye by hand. Fit the jack ✻ at the front – or rear – in such a way that the jack head engages in the plastic retainer beneath the vehicle. Check that it is properly engaged.

   The jack base must be on the ground directly below the jacking point in a manner that prevents it from slipping.

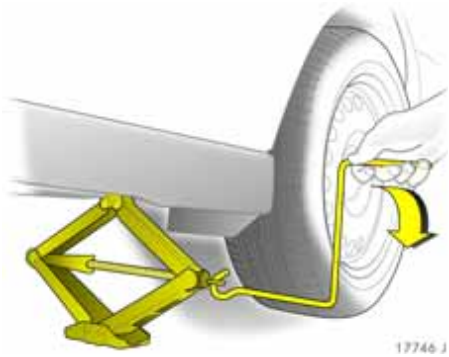

   Attach crank to eye of threaded rod and turn crank to raise vehicle.

   If this is not the case, carefully lower the vehicle immediately and reposition the jack.

5. Unscrew wheel bolts and wipe clean with a cloth. Then apply a light coating of grease to the wheel bolts. Do not grease the thread of the bolts. Do not put the wheel bolts down in a location where they may become soiled.

   If the wheel bolts have retaining washers ✻, they must not be removed.

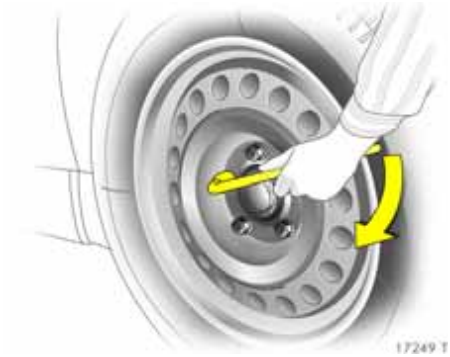

6. Change the wheel. Notes on spare wheel – see page 236, notes on temporary spare wheel – see page 237.
7. Screw in wheel bolts and tighten slightly, inserting the wheel bolt wrench ✻ as far as possible.
8. Lower vehicle.
9. Tighten wheel bolts crosswise, putting on wheel bolt wrench ✻ as far as possible.

►

Downloaded from www.Manualslib.com manuals search engine

Ofrecido por www.electromanuales.com

10. Before refitting the wheel trim, clean the wheel around the retaining clips. Valve symbol ✻ on back of wheel trim must point towards valve on wheel.

    Align and refit wheel trim or wheel bolt caps ✻.

    Alloy wheels ✻: Align and refit wheel bolt caps ✻.

11. Stow away replaced wheel, tools and warning triangle in the luggage compartment, see page 238.
12. Check the tyre pressure of the newly mounted wheel. Correct if necessary.
13. Have the tightening torque of the wheel bolts on the new wheel checked on the vehicle using a torque wrench as soon as possible and, if necessary, corrected. Tightening torque – see page 299.
14. Replace the faulty tyre on the wheel that was removed.
15. Replace temporary spare wheel ✻ with a full specification wheel without delay.

Tyre repair kit ✻

Minor damage to the tyre tread or side wall, e.g. from foreign bodies, can be repaired using the tyre repair kit.

Do not remove the foreign body from the tyre.

Tyre damage exceeding 4 mm or that is on the rim cannot be repaired with the tyre repair kit.

⚠Warning

Driving with inadequate tyre pressure or a flat tyre can lead to hidden tyre damage, which cannot be eliminated by using the tyre repair kit. Part the vehicle and consult a workshop. We recommend your Vauxhall Authorised Repairer.

Important information – see page 246.

In the event of a flat tyre:

- Switch on hazard warning lights, apply hand brake, automatic transmission ✻ - selector lever in **P**, manual transmission or Easytronic ✻ - engage 1st or reverse gear.
- Correctly set up the warning triangle. Warning triangle – see page 234.

Downloaded from www.Manualslib.com manuals search engine

Ofrecido por www.electromanuales.com

The tyre repair kit is in a compartment in the spare wheel well of the luggage compartment.

1. Take the pouch with the tyre repair kit from the compartment. Carefully remove the components from the pouch.
2. Remove the compressor.

3. Remove the electrical connection cable and air hose from the stowage compartments on the underside of the compressor.

4. Screw the compressor air hose to the connection on the sealant bottle.
5. Fit the sealant bottle in the retainer on the compressor.

   Set the compressor near the tyre in such a way that the sealant bottle is upright.
6. Remove the valve cap from the defective tyre.

Downloaded from www.Manualslib.com manuals search engine

Ofrecido por www.electromanuales.com

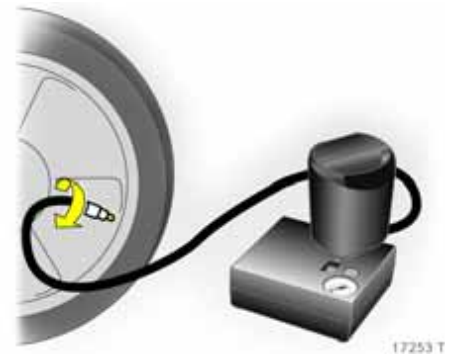

7. Screw the filler hose to the tyre valve.
8. The switch on the compressor must be set to **O**.
9. Connect the compressor plug to the accessory socket or cigarette lighter socket. Accessory socket – see page 101.

10. Switch on ignition.
11. Set the rocker switch on the compressor to **I**. The tyre is filled with sealant.
12. While the sealant bottle drains (approx. 30 seconds) the pressure indicator on the compressor briefly points to 6 bar. Pressure then sinks again.
13. All of the sealant is pumped into the tyre. Afterwards, the tyre is filled with air.
14. The prescribed tyre pressure – see page 299 should be reached within 10 minutes. Switch off the compressor when the correct pressure is obtained.

If the prescribed tyre pressure is not reached within 10 minutes, detach the tyre repair kit. Move the vehicle one tyre revolution (approx. 2 metres) in or against the flow of traffic. Reconnect the tyre repair kit and continue the filling procedure for 10 minutes. If the prescribed tyre pressure is still not reached, the tyre is too badly damaged. Park the vehicle and consult a workshop. We recommend your Vauxhall Authorised Repairer.

Downloaded from www.Manualslib.com manuals search engine

Ofrecido por www.electromanuales.com

Drain excess tyre pressure with the button over the pressure indicator.

Do not run the compressor for more than 10 minutes, see "Important information" on page 246.

15. Detach the tyre repair kit. Screw the filler hose to the free connection on the sealant bottle. This prevents sealant leakage. Stow the tyre repair kit in the luggage compartment.
16. Wipe away any sealant spill with a cloth.
17. Dismantle the warning triangle and stow it in the luggage compartment – see page 234.
18. The enclosed sticker shows the maximum permitted speed at which the tyre repair may be used. Apply sticker in the driver's field of vision.
19. Continue driving immediately to allow the sealant to distribute evenly throughout the tyre. Stop after approx. 6 miles / 10 km (no more than 10 minutes) and check tyre pressure. Screw the compressor air hose directly onto the tyre valve (see Fig. 17256 T).

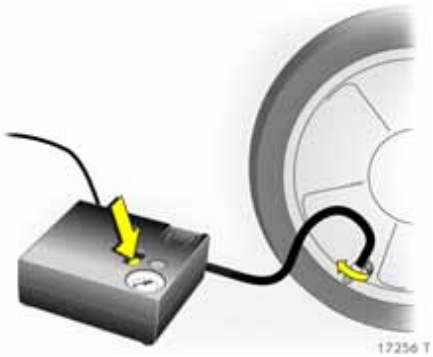

If tyre pressure is more than 1.3 bar, adjust to the prescribed value. Repeat the procedure until there is no more pressure loss.

If tyre pressure is below 1.3, the vehicle must not be driven. Consult a workshop. We recommend your Vauxhall Authorised Repairer.

20. Stow the tyre repair kit in the luggage compartment – see page 242.

Downloaded from www.Manualslib.com manuals search engine

Ofrecido por www.electromanuales.com

Important

⚠Warning

Do not drive faster than 50 mph (80 km/h).

Do not use the temporary spare wheel for a lengthy period.

Steerability and driving behaviour may be impaired.

Replace repaired tyres as soon as possible.

The driving comfort of the repaired tyre is severely affected, therefore have this tyre replaced.

If the compressor makes abnormal noises or heats up greatly, switch it off for at least 30 minutes.

The integrated safety valve opens at a pressure of 7 bar.

Protect the compressor from moisture and rain.

The sealant can only be stored for approx. 4 years. After this time, the sealing properties can no longer be guaranteed. Heed the expiration date on the sealant bottle.

The sealant bottle can only be used once. Replace a used sealant bottle.

The compressor and sealant can be used from approx. -30 °C.

Dispose of a used tyre repair kit in accordance with applicable legislation.

An adapter for filling air mattresses, inner tubes, etc. is located on the underside of the compressor. Remove by unscrewing the compressor air hose and pulling out the adapter.

Electrical system

⚠Warning

Electronic ignition systems generate very high voltages. Do not touch the ignition system; high voltage can be fatal.

Fuses

There are three fuse boxes in the vehicle: in the passenger compartment on the far left of the dashboard, in the luggage compartment on the left in the stowage compartment, and in the engine compartment front left.

Downloaded from www.Manualslib.com manuals search engine

Ofrecido por www.electromanuales.com

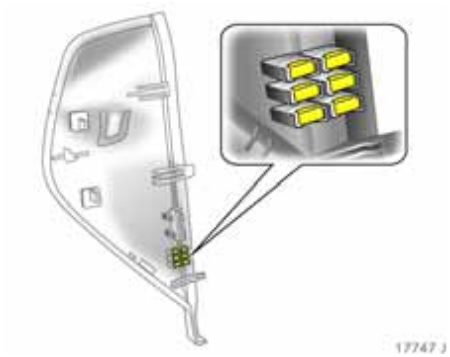

It is advisable to carry a full set of fuses – available from any Vauxhall Authorised Repairer.

Spare fuses are kept on back of fuse box cover at instrument panel. For opening cover – see next page.

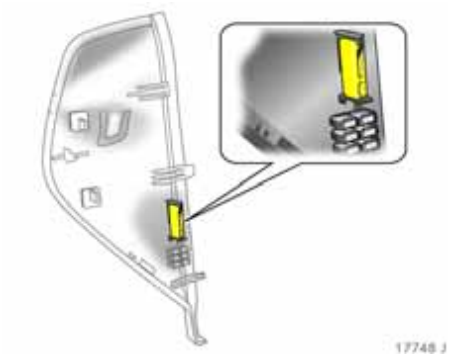

Before replacing a fuse, turn off the respective switch and the ignition.

A defective fuse (Fig. 17259 T) can be recognised by its melted wire. A new fuse should only be installed after the cause of the fault has been rectified.

There is fuse extractor on the rear of the fuse box cover on the instrument panel for changing fuses – see figure above.

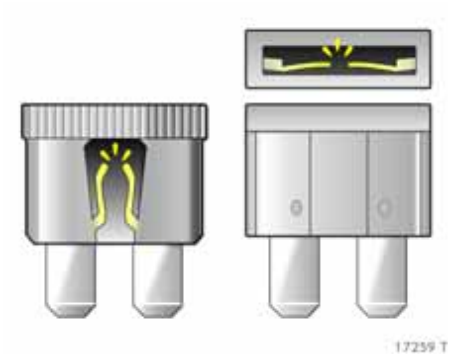

Only fit fuses of the specified current rating. Each fuse has its current rating written on it, in addition the ratings are colour coded.

Fuse colour	Fuse rating
Brownish yellow	5 A
Brown	7.5 A
Red	10 A
Blue	15 A
Yellow	20 A
Transparent	25 A
Green	30 A
Orange	40 A
Dark blue	60 A

Downloaded from www.Manualslib.com manuals search engine

Ofrecido por www.electromanuales.com

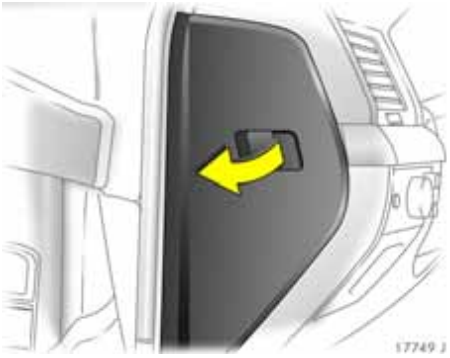

Fuses and the most important circuits they protect

Fuse box in passenger compartment
The fuse box is on the left, on the outside of the instrument panel. Open door. Disengage cover by pulling firmly and remove.

Spare fuses, fuse extractor – see page 246.

Some circuits may be protected by several fuses.

No.	Circuit	Rating
1	Infotainment system	20 A
2	Interior fan, heating, air conditioning system	7.5 A
3	Sun roof	20 A
4	–	–
5	Door module control unit	7.5 A
6	Brake light	7.5 A
7	Bodywork module control unit	30 A
8	Control unit front passenger door module	30 A
9	Central control unit	7.5 A
10	Control unit Steering column module	7.5 A
11	Diagnostics plug	7.5 A
12	Battery overload protection	15 A
13	–	–
14	–	–
15	Door module control unit	30 A
16	–	–
17	Instruments, information display	15 A
18	Ignition terminal 15 Air conditioning	7.5 A
19	–	–
20	Yaw rate sensor (ESP®Plus)	7.5 A
21	Infotainment system	7.5 A
22	Cigarette lighter	30 A
23	Interior fan, air conditioning, climate control system	30 A 40 A
24	–	–
25	Heating, air conditioning system	7.5 A
26	Instruments, information display	7.5 A
27	–	–

Downloaded from www.Manualslib.com manuals search engine

Ofrecido por www.electromanuales.com

Fuse box in luggage compartment
The fuse box is located on the left side of the luggage compartment, in the stowage compartment.

Saloon / hatch: press the latch down and open the cover.

Estate: press both latches down and open the cover and interior trim.

Spare fuses, fuse extractor – see page 246.

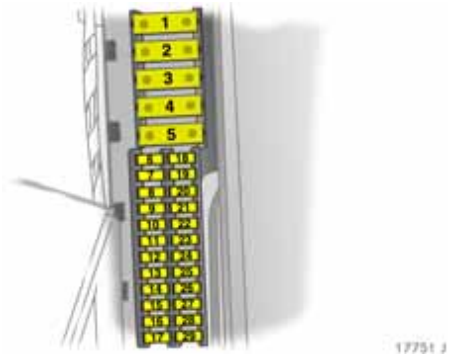

Some circuits may be protected by several fuses.

No.	Circuit	Rating
1	–	–
2	–	–
3	Electric seat adjustment	40 A
4	Heated rear window	40 A
5	Electric seat adjustment	40 A
6	Electric window operation, right rear	30 A
7	Electric window operation, left rear	30 A
8	Seat heating, rear right	15 A
9	Horn, Vauxhall alarm system	15 A
10	Fuel pump	20 A
11	Battery voltage	25 A
12	Seat heating, rear left	15 A
13	Towing equipment	20 A
14	Tailgate wiper	15 A
15	Heated seats, seat climate control, left front	15 A
16	Seat heating, front right	15 A
17	Accessory socket	15 A
18	Tailgate locking, estate	30 A
19	Terminal 30	10 A
20	Fuel filler cap locking	7.5 A
21	Ultrasonic sensor, Vauxhall alarm system	5 A
22	Electrically operated tailgate	30 A
23	Glass breakage sensor (Vauxhall alarm system)	7.5 A
24	Battery voltage	25 A
25	Electronic chassis	10 A
26	Terminal 15 (ignition lock)	25 A
27	Seat occupancy recognition, tyre pressure monitoring system Rain sensor, air conditioning system	5 A
28	Parking distance sensor	7.5 A
29	–	–

Downloaded from www.Manualslib.com manuals search engine

Ofrecido por www.electromanuales.com

Fuse box in engine compartment
The fuse box is in the box at the front left side of the engine compartment.

⚠Warning

Switch off engine before opening the fuse box in the engine compartment, risk of injury.

To open, disengage front battery cover and tilt upwards.

Disengage the bar at the front of the cover of fuse box and swing it upwards.

Spare fuses, fuse extractor – see page 246.

Some circuits may be protected by several fuses.

No.	Circuit	Rating
1	Engine electronics, transmission electronics	20 A
2	Starter	25 A
3	Horn	20 A
4	Air conditioning system, climate control system	10 A
5	Windscreen wash system	15 A
6	–	–

Downloaded from www.Manualslib.com manuals search engine

Ofrecido por www.electromanuales.com

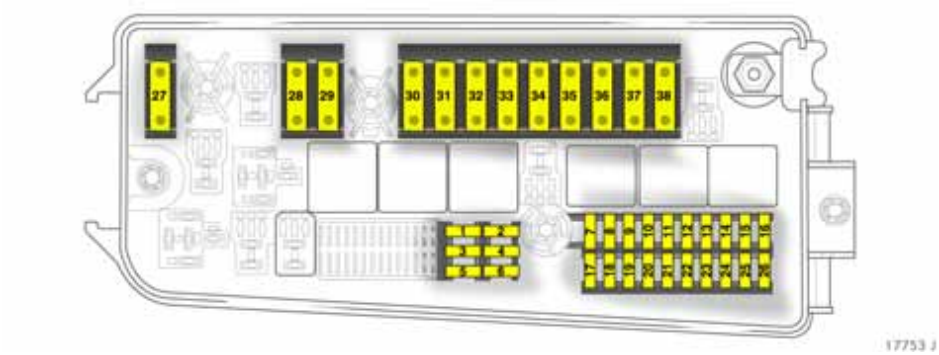

No.	Circuit	Rating
7	Central control unit, ESP®Plus	15 A
8	Headlights, windscreen washing nozzles	10 A
9	Power steering	7.5 A
10	Adaptive Forward Lighting	10 A
11	Windscreen wiper	30 A
12	Central control unit, ESP®Plus	7.5 A
13	Headlight wash system	30 A
14	Oxygen sensor	10 A
15	Engine control unit[1)]	10 A
16	ABS	5 A

[1)] The brake lights are on all the time if the fuse is defective and the ignition is switched on.

No.	Circuit	Rating
17	–	–
18	–	–
19	Adaptive Forward Lighting, headlight range adjustment, xenon headlight system	15 A 5 A 15 A
20	Headlight range adjustment	5 A
21	–	–
22	Windscreen wiper	30 A
23	Auxiliary heating	20 A
24	Battery voltage, terminal 30	30 A
25	Battery voltage, terminal 30	30 A
26	–	–

No.	Circuit	Rating
27	Easytronic	30 A
28	Tailgate module control unit	60 A
29	ABS	40 A
30	Tailgate module control unit	60 A
31	Vehicle interior module control unit	60 A
32	ABS	40 A
33	Vehicle interior module control unit	60 A
34	Tailgate module control unit	60 A
35	Cooling fa[1)]	30 A 40 A
36	Cooling fa[1)]	20 A 30 A
37	Adaptive Forward Lighting (AFL): Slot for changing to symmetrical dipped beam for driving abroad, see page 135	any maxi-fuse
38	–	–

[1)] Depending on engine.

Downloaded from www.Manualslib.com manuals search engine

Ofrecido por www.electromanuales.com

Bulb replacement

Before replacing a bulb, switch ignition off and switch relevant switch off.

Only hold new bulb at base! Do not touch the bulb glass with bare hands, otherwise fingerprints on the glass evaporate. Residue builds up on the reflector eventually resulting in a dull reflector. Inadvertently stained bulbs may be cleaned with a clean non-fluffy cloth, using alcohol or white spirits.

Replacement bulb must be in accordance with data on base of defective bulb. Do not exceed wattage given on bulb base.

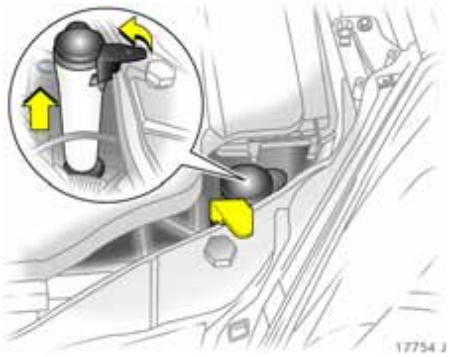

To change the lights on the left-hand side, remove filler neck from windscreen wash system bottle to gain better access: disengage retaining clamp and withdraw filler neck by pulling upwards. Wash fluid may escape if the bottle is full.

⚠Warning

Protect the environment. Do not allow wash fluid to seep into the ground or drain into the sewage system.

As the headlight must be removed, entrust bulb replacement on the right side to a workshop. We recommend your Vauxhall Authorised Repairer.

Headlight aiming

We recommend that headlight aiming be carried out by your Vauxhall Authorised Repairer, who will have special equipment.

When adjusting headlights, headlight range adjustment must be set to 0.

Downloaded from www.Manualslib.com manuals search engine

Ofrecido por www.electromanuales.com

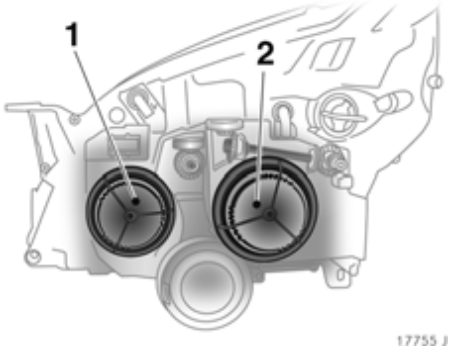

Halogen headlight system dipped and main beam

Headlights with separate systems for main beam **1** (inner bulbs) and dipped beam **2** (outer bulbs).

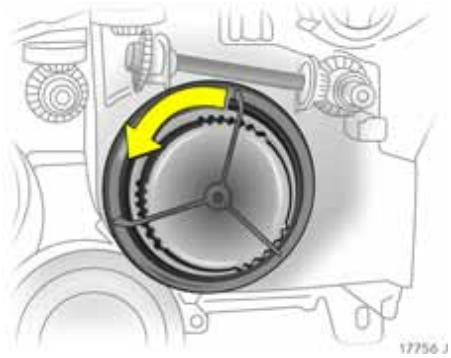

Dipped beam

1. Open bonnet.
2. To replace the bulb on the left side, remove the filler neck of the screen wash bottle – see page 252. As the headlight must be removed, entrust bulb replacement on the right side to a workshop. We recommend your Vauxhall Authorised Repairer.
3. Turn the headlight cover anticlockwise and remove.

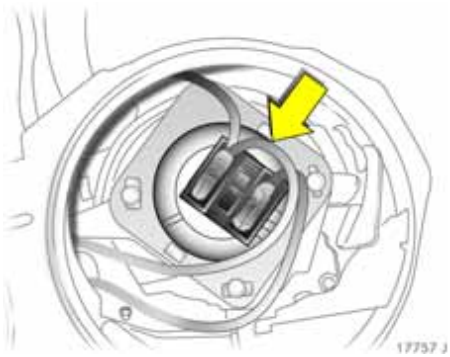

4. Push down bulb at bulb holder.

►

Downloaded from www.Manualslib.com manuals search engine

Ofrecido por www.electromanuales.com

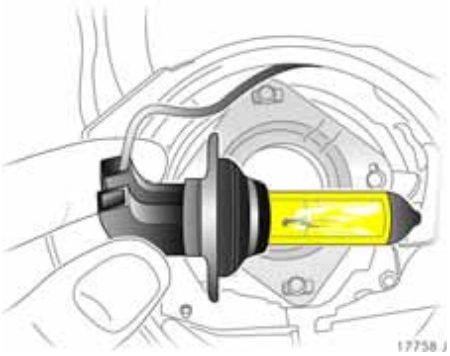

5. Remove the bulb holder with bulb from the reflector.

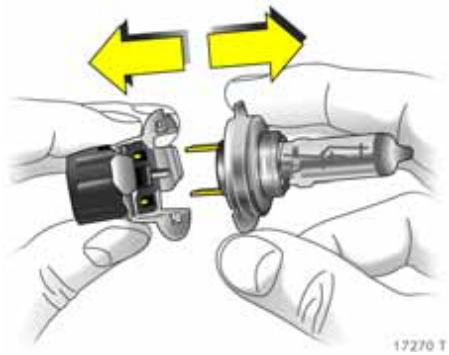

6. Detach bulb from bulb mounting.
7. Insert new bulb into bulb mounting, without touching the glass.
8. Insert new bulb so that the two lugs on the bulb mounting engage in the recesses in the reflector.
9. Engage the bulb holder.
10. Reposition the headlight cover and turn it clockwise.
11. After changing bulbs on the left-hand side, refit the filler neck of the headlight wash bottle and click it home.

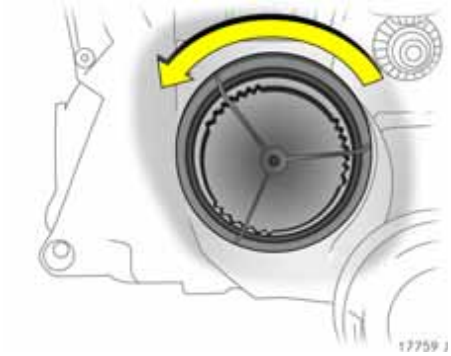

Main beam

1. Open bonnet.
2. To replace the bulb on the left side, remove the filler neck of the screen wash bottle – see page 252. As the headlight must be removed, entrust bulb replacement on the right side to a workshop. We recommend your Vauxhall Authorised Repairer.
3. Turn the headlight cover anticlockwise and remove.
4. Detach plug connector from bulb.

Downloaded from www.Manualslib.com manuals search engine

Ofrecido por www.electromanuales.com

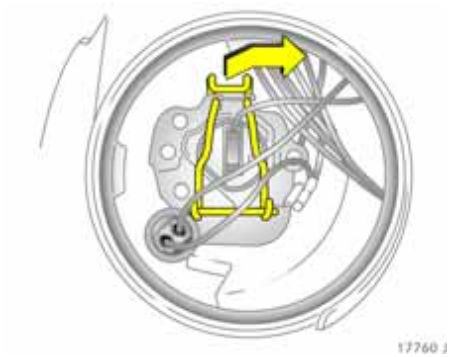

5. Press spring wire clip forward, disengage to the right and open.

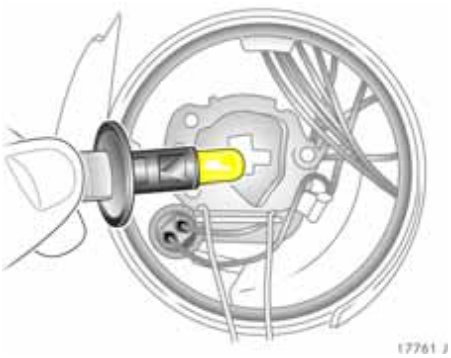

6. Remove bulb from reflector housing.
7. When fitting a new bulb, engage the lugs in the recesses on the reflector without touching the glass.
8. Engage spring wire clip, plug connector onto bulb.
9. Reposition the headlight cover and turn it clockwise.
10. After changing bulbs on the left-hand side, refit the filler neck of the headlight wash bottle and click it home.

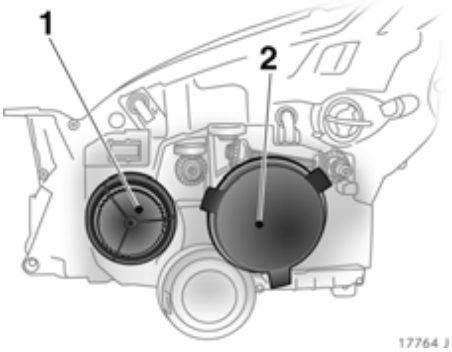

Xenon headlight system, dipped and main beam

Headlights with separate systems for main beam **1** (inner bulbs) and dipped beam **2** (outer bulbs).

Dipped beam

⚠Warning

The dipped beam operates at very high voltage. Do not touch; high voltage can be fatal. Have bulbs changed by a workshop. We recommend your Vauxhall Authorised Repairer.

►

Downloaded from www.Manualslib.com manuals search engine

Ofrecido por www.electromanuales.com

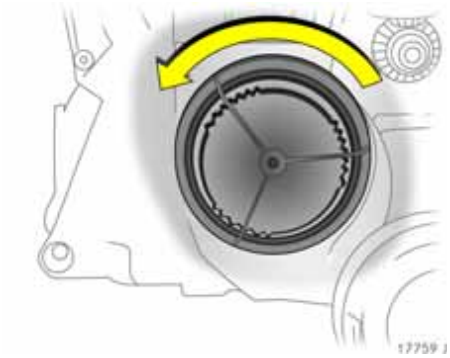

Main beam

1. Open bonnet.
2. To replace the bulb on the left side, remove the filler neck of the screen wash bottle – see page 252. As the headlight must be removed, entrust bulb replacement on the right side to a workshop. We recommend your Vauxhall Authorised Repairer.
3. Turn the headlight cover anticlockwise and remove.
4. Detach plug connector from bulb.

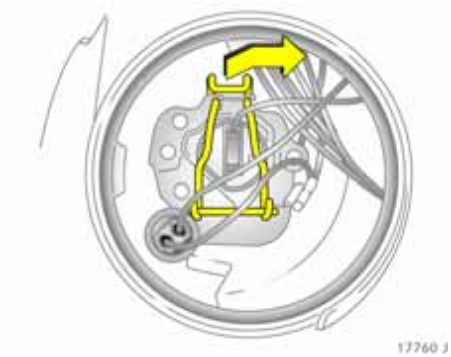

5. Press spring wire clip forward, disengage to the right and open.

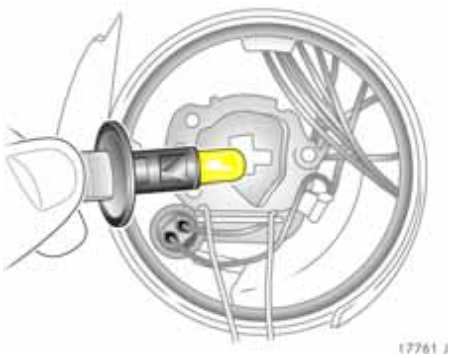

6. Remove bulb from reflector housing.
7. When fitting a new bulb, engage the lugs in the recesses on the reflector without touching the glass.
8. Engage spring wire clip, plug connector onto bulb.
9. Reposition the headlight cover and turn it clockwise.
10. After changing bulbs on the left-hand side, refit the filler neck of the headlight wash bottle and click it home.

Downloaded from www.Manualslib.com manuals search engine

Ofrecido por www.electromanuales.com

Adaptive Forward Lighting System ✻

Xenon headlight system for main and dipped beam together with curve illumination based on steering angle.

⚠Warning

Xenon headlights operate at extremely high electrical voltage. Do not touch. Danger to life. The bulbs for dipped beam, main beam, turn lighting, parking lights and turn signals should only be replaced by a workshop. We recommend your Vauxhall Authorised Repairer.

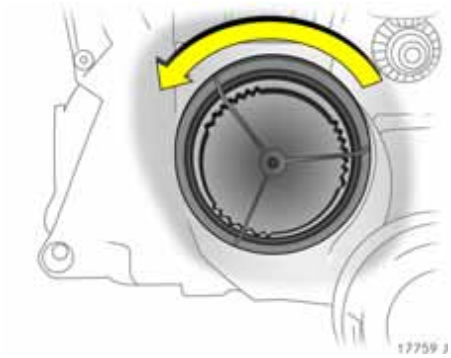

Halogen headlight system, Xenon headlight system, Parking lights

1. Open bonnet.
2. To replace the bulb on the left side, remove the filler neck of the screen wash bottle – see page 252. As the headlight must be removed, entrust bulb replacement on the right side to a workshop. We recommend your Vauxhall Authorised Repairer.
3. Turn the headlight cover anticlockwise and remove.

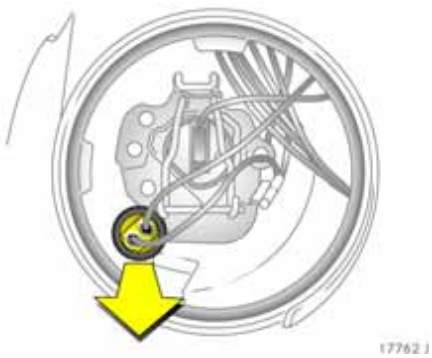

4. Remove parking light bulb holder from reflector.

►

Downloaded from www.Manualslib.com manuals search engine

Ofrecido por www.electromanuales.com

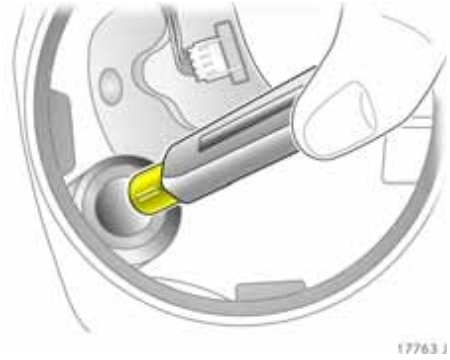

5. Remove bulb from socket.
6. Insert new bulb, without touching the glass.
7. Insert socket in reflector, position headlight cover and turn clockwise.
8. After changing bulbs on the left-hand side, refit the filler neck of the headlight wash bottle and click it home.

Halogen headlight system, Xenon headlight system, Front indicator lights

Have the bulbs replaced by a workshop. We recommend your Vauxhall Authorised Repairer.

Side turn signal lights

Have the bulbs replaced by a workshop. We recommend your Vauxhall Authorised Repairer.

Fog lights ✻

Have the bulbs replaced by a workshop. We recommend your Vauxhall Authorised Repairer.

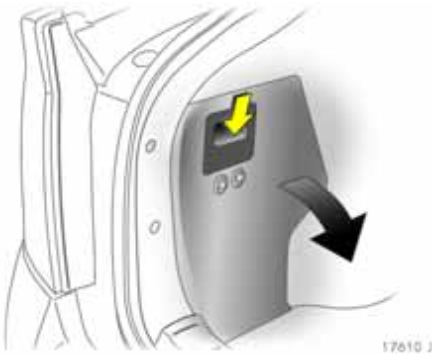

Tail lights

Saloon / hatch

1. To open the stowage compartment, press down bar and open the cover.

Downloaded from www.Manualslib.com manuals search engine

Ofrecido por www.electromanuales.com

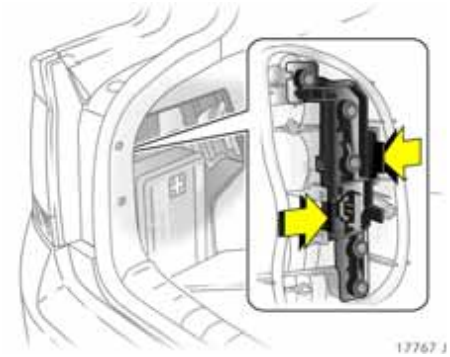

2. Detach plug connector from bulb mounting.
3. Press the two retaining lugs on outer edges of bulb mounting towards each other and remove bulb mounting.

   Bulbs from top to bottom:
   Turn signal light
   Tail light/brake light
   Tail light
   Fog tail light
   Reversing light

4. Remove bulb from socket.
5. Insert new bulb without touching the glass. Fit bulb mounting into bulb housing. Connect plug. Close stowage compartment.

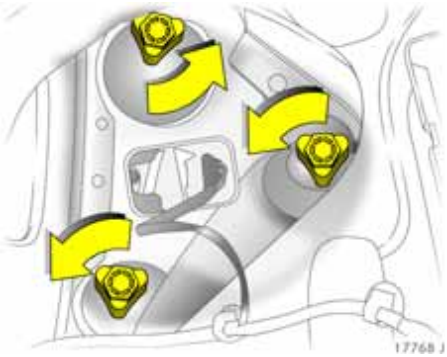

Estate

1. Open the compartment on the left or right-hand side by pressing the latch down – see page 235.
2. Hold the bulb housing from the outside, use a wheel bolt spanner ✻ to loosen the retaining nuts and unscrew them by hand. Remove the bulb housing to the rear. Wheel bolt spanner ✻ – see vehicle tools, page 238.
3. Detach the cable from the bulb housing.

►

Downloaded from www.Manualslib.com manuals search engine

Ofrecido por www.electromanuales.com

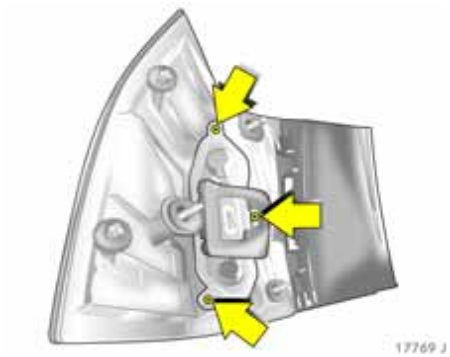

4. Undo the three screws using a screwdriver and detach the bulb mounting.

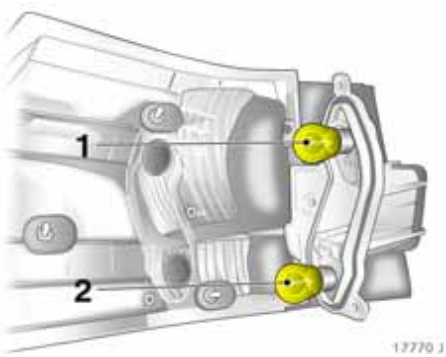

5. Remove the bulb from the socket. Bulbs in bulb mounting:
   1 = Brake/tail light
   2 = Turn signal light
6. Fit a new bulb without touching the glass. Refit the bulb mounting and screw it into place. Position the light housing in the vehicle body and screw it into place. Close the compartment in the side trim.

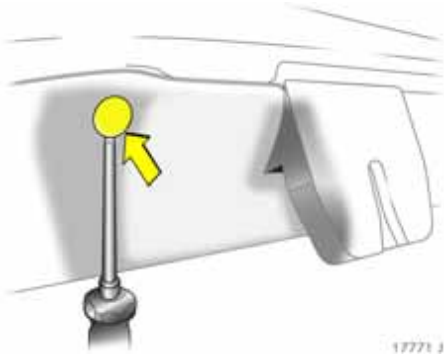

Tailgate lights

We recommend that you have bulbs changed by a workshop because of the effort involved. We recommend your Vauxhall Authorised Repairer.

1. Use a screwdriver to prise off the plastic plugs in the tailgate panelling to the right and left of the tailgate lock.

Downloaded from www.Manualslib.com manuals search engine

Ofrecido por www.electromanuales.com

2. Undo screws in handle of inner panelling with torx screwdriver.
3. Remove the inner panelling and clips from the tailgate.

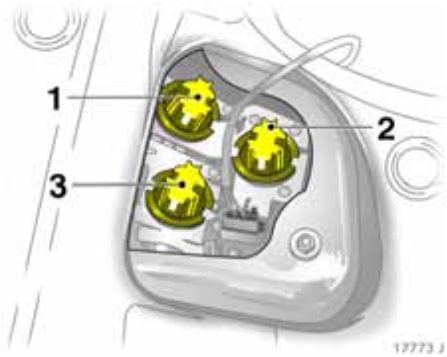

4. Unscrew the mounting in question:
   1 = Tail light
   2 = Fog tail light
   3 = Reversing light
5. Remove bulb from socket.
6. Fit a new bulb without touching the glass. Refit the mounting in the tailgate.
7. Refit the inner panelling to the tailgate using the clips. Tighten the screw in the handle. Refit the plastic plugs in the openings.

Lights in electrically operated tailgate ✻
Have bulbs replaced by a workshop. We recommend your Vauxhall Authorised Repairer.

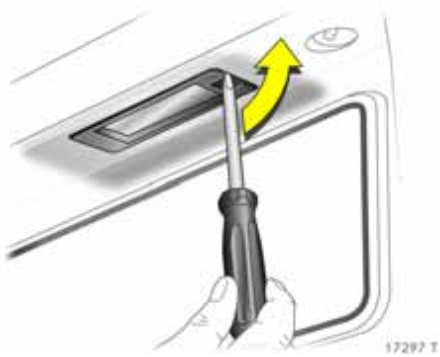

Number plate light

1. Insert screwdriver vertically in bulb insert as illustrated in figure. Press to the side and release spring.

►

Downloaded from www.Manualslib.com manuals search engine

Ofrecido por www.electromanuales.com

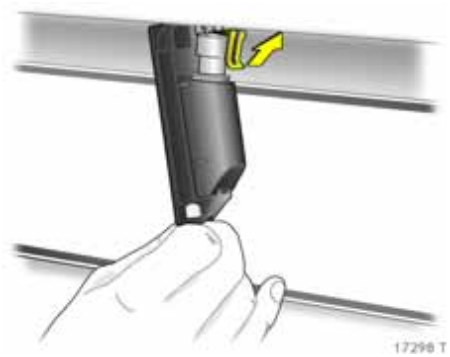

2. Remove bulb housing downward, taking care not to pull on the cable.
3. Lift flap and disconnect plug from bulb socket.

4. Rotate bulb holder to left and disengage.
5. Remove bulb from socket.
6. Insert new bulb, without touching the glass.
7. Insert light holder in light housing and engage by rotating clockwise.
8. Connect plug to bulb socket.
9. Insert and engage bulb housing.

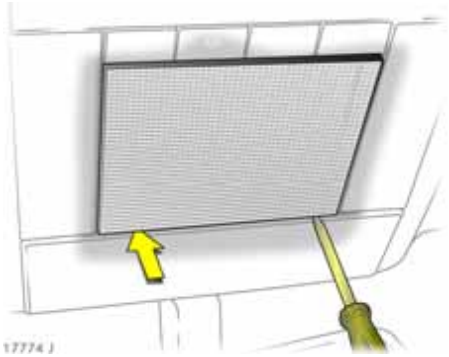

Courtesy light

Front courtesy light, reading lights ✻

To ensure that no power is supplied to the lights, close the doors before removing.

1. Lever the lens out of the housing recesses.

Downloaded from www.Manualslib.com manuals search engine

Ofrecido por www.electromanuales.com

2. Remove bulb from socket.
3. Insert new bulb, without touching the glass.
4. Mount lens and engage in position.

Rear courtesy lights ✻, rear reading lights ✻
Have the bulbs replaced by a workshop. We recommend your Vauxhall Authorised Repairer.

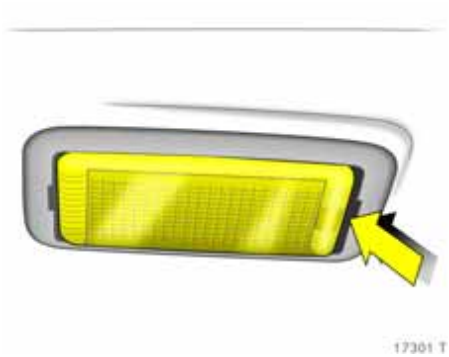

Glove compartment lighting, luggage compartment lighting, foot well lighting ✻
To ensure that no power is supplied to the lights, close the doors or hold the contact switch depressed before removing.

1. Prise the light out with a screwdriver.

2. Press bulb slightly towards spring clip and remove.
3. Insert new bulb, without touching the glass.
4. Insert light in opening and engage in position.

Instrument illumination, Information display illumination ✻
Have the bulbs replaced by a workshop. We recommend your Vauxhall Authorised Repairer.

Downloaded from www.Manualslib.com manuals search engine

Ofrecido por www.electromanuales.com

If you have a problem

In our experience, the most common cause of all complaints is the result of misunderstanding or lack of communication between the customer and the Vauxhall Authorised Repairer.

We sincerely hope you will never have cause to complain about your vehicle. However, if things do go wrong, the best course of action for you to take is to contact your Vauxhall Authorised Repairer's Service Reception Staff and explain the difficulty you are having. We are confident they will do their utmost to resolve the problem to your complete satisfaction.

Sometimes, however, despite the best of intentions of all concerned, misunderstandings can occur. If your problem has not been resolved to your satisfaction, please make an appointment to discuss the matter with the Manager of the department concerned.

The majority of areas of concern can be quickly resolved in this way.

Should you wish to pursue the matter further, the Principal of the Vauxhall Authorised Repairer should be made aware of your concern. It is advisable in cases such as this to write to him to confirm your problem and the solutions that have been offered.

You can be assured the Authorised Repairer's Principal will only be too anxious to fully investigate your problems and correct any errors made. After all, he has a large investment in his business and is proud of his reputation and professionalism and fully realises that satisfied customers are his key to success.

In the unlikely event that you are still not happy with the answer your Vauxhall Authorised Repairer has given, or the action he proposes to correct the problem, you may contact the Customer Care Department[1)] where a team of Customer Care Consultants will spare no effort to ensure your complete satisfaction.

Vauxhall Motors Ltd.
Customer Care,
Griffin House,
Osborne Road,
LUTON,
Beds., LU1 3YT
Telephone: 0845 090 2044

They will review all the facts involved. Then if it is felt some further action can be taken, the Vauxhall Authorised Repairer will be advised accordingly. In any case, your contact will be acknowledged confirming Vauxhall Motors' position in the matter.

1) Calls may be monitored and recorded for training purposes.

If you are not satisfied with the outcome, you can if you wish, seek advice from an independent third party such as:

Automobile Association (A.A.)
Fanum House,
BASINGSTOKE,
Hants., RG21 2EA

Royal Automobile Club (R.A.C.),
R.A.C. Motoring Services Ltd.,
89-91 Pall Mall,
LONDON, SW1Y S45

The Customer Relations Department,
Society of Motor Manufacturers and Traders Ltd. (S.M.M.T.),
Forbes House, Halkin Street,
LONDON, SW1X 7DS

Customer Complaints Service,
Scottish Motor Trade Association,
(S.M.T.A.),
3 Palmerston Place,
EDINBURGH, EH12 5AQ

The National Conciliation Service,
Retail Motor Industry Federation,
9 North Street,
RUGBY, CV21 2AB

If you have a problem whilst abroad:
The Service Departments of Adam Opel GmbH and General Motors branches everywhere will provide information and assistance:

In **Luxembourg** please contact
the General Motors Service Department in Antwerp – Belgium
Telephone 00 32-34 50 63 29

Downloaded from www.Manualslib.com manuals search engine

Ofrecido por www.electromanuales.com

General Motors Austria GmbH
Groß-Enzersdorfer Str. 59
1220 Vienna – Austria
Tel. 00 43 1-2 88 77 444 or
00 43-1-2 88 77 0

General Motors Belgium N.V.
Noorderlaan 401 – Haven 500
2030 Antwerp – Belgium
Telephone 00 32-34 50 63 29

General Motors Southeast Europe,
org. složka Olbrachtova 9
140 00 Prague – Czech Republic
Tel. 00 420-2 39 004 321

General Motors Denmark
Jaegersborg Alle 4
2920 Charlottenlund – Denmark
Telephone 00 45-39 97 85 00

Vauxhall Motors Ltd.
Customer Care
Griffin House, Osborne Road
Luton, Bedfordshire, LU1 3YT – England
Tel. 00 44-845 090 2044

General Motors Finland Oy
Pajuniityntie 5
00320 Helsinki – Finland
Tel. 00 358-9 817 101 47

General Motors France
1 – 9, avenue du Marais
Angle Quai de Bezons
95101 Argenteuil Cedex – France
Tel. 00 33-1-34 26 30 51

ADAM OPEL GmbH
Bahnhofsplatz 1
65423 Rüsselsheim – Germany
Tel. 00 49-61 42-77 50 00 or
00 49-61 42-7 70

General Motors Hellas S.A.
56 Kifisias Avenue & Delfon str.
Amarousion
151 25 Athens – Greece
Tel 00 30-1-6 80 65 01

General Motors Southeast Europe Ltd.
Szabadsag utca 117
2040 Budaörs – Hungary
Tel. 00 36-23 446 100

General Motors India
Sixth Floor, Tower A, Global Business Park
Mehrauli – Gurgaon Road
Gurgaon – 122 022, Haryana – India
Tel. 00 91-124 280 3333

General Motors Ireland Ltd.
Opel House, Unit 60, Heather Road
Sandyford, Dublin 18 – Ireland
Tel. 00 353-1-216 10 00

General Motors Italia Srl
Piazzale dell'Industria 40
00144 Rome – Italy
Tel. 00 39-06-5 46 51

General Motors Nederland B.V.
Lage Mosten 49 – 63
4822 NK Breda – Netherlands
Tel. 00 31-76-5 44 83 00

General Motors Norge AS
Kjeller-Vest 6
2027 Kjeller – Norway
Tel. 00 47-23 50 01 04

General Motors Poland Sp. z o. o.
Domaniewska 41
06-672 Warsaw – Poland
Tel. 00 48- 22-606 17 00

General Motors Portugal
Quinta da Fonte
Edificío Fernão Magalhães, Piso 2
2780-190 Paço d'Arcos – Portugal
Tel. 00 351- 21 440 75 00

General Motors Southeast Europe,
org. zložka
Apollo Business Centre
Mlynské Nivy 45
821 09 Bratislava – Slovakia
Tel. 00 421-2 58 275 543

General Motors España S.L.
Paseo de la Castellana, 91
28046 Madrid – Spain
Tel. 00 34-902 25 00 25

General Motors Norden AB
Årstaängvägen 17
100 73 Stockholm – Sweden
Tel. 00 46-20 333 000

General Motors Suisse S.A.
Stelzenstraße 4
8152 Glattbrugg – Switzerland
Tel. 00 41-44 828 28 80

General Motors Türkiye Ltd. Sti.
Kemalpasa yolu üzeri
35861 Torbali/Izmir – Turkey
Tel. 00 90-2 32-8 53-14 53

In **Albania, Bosnia-Herzegovina, Bulgaria, Croatia, Estonia, Latvia, Lithuania, Macedonia, Romania, Serbia-Montenegro and Slovenia**
please contact the
General Motors Service Department in
Budaörs – Hungary
Tel. 00 36-23 446 100

Downloaded from www.Manualslib.com manuals search engine

Ofrecido por www.electromanuales.com

Maintenance, Inspection System

A note on safety 267
Checking and topping up fluids 267
Engine oil 268
Diesel fuel filter 270
Coolant 270
Brake fluid 272
Windscreen wiper 273
Windscreen and headlight wash systems ✻..... 275
Battery 276
Protecting electronic components 276
Vehicle decommissioning..... 277
Vehicle recommissioning..... 277

In order to guarantee economical and safe vehicle operation and to maintain the value of your vehicle, it is of vital importance that all maintenance work is carried out at the proper intervals as specified by Vauxhall.

In vehicles with a fixed oil change and service interval, **InSP** appears in the odometer display when the ignition is switched on and off. Have the service work carried out within one week or 300 miles (500 km). We recommend your Vauxhall Authorised Repairer.

The service interval display takes account of off-the-road periods during which the battery is disconnected.

For vehicles with flexible oil change and service intervals, the length of these intervals is based on several parameters stemming from usage. For this reason, various engine-specific data is continually gathered and is used to calculate the remaining distance until the next service.

The remaining distance can be seen in the odometer display when the ignition is off: Press the reset button next to the trip odometer. **InSP** and the remaining distance will be displayed.

If the remaining distance is less than 1000 miles (1500 km), **InSP** is displayed with a remaining distance of 600 miles (1000 km) when the ignition is switched on. **InSP** is displayed for several seconds if the remaining distance is less than 300 miles (500 km). Have the service work that is due carried out within one week or 300 miles (500 km). Have this work carried out by a Vauxhall Authorised Repairer in order to avoid invalidation of warranty claims.

Downloaded from www.Manualslib.com manuals search engine

Ofrecido por www.electromanuales.com

Further information on maintenance and the inspection system can be found in the service booklet, which is in the glove compartment.

Have maintenance work, as well as repairs to the bodywork and equipment, carried out by a professional. We recommend your Vauxhall Authorised Repairer, who is familiar with Vauxhall vehicles and in possession of the necessary special tools and the latest service instructions from Vauxhall. It is particularly advisable to use a Vauxhall Authorised Repairer during the warranty period to avoid invalidation of warranty claims. See the Service Booklet for further information.

Separate anti-corrosion service
Have the work carried out at the intervals specified in the Service Booklet. We recommend your Vauxhall Authorised Repairer.

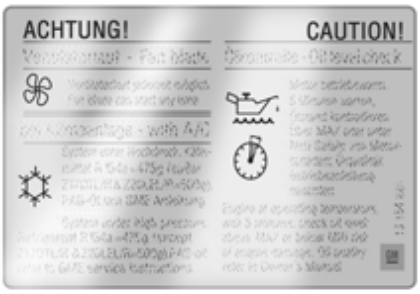

17304 T

A note on safety

Always switch ignition off when performing checks in the engine compartment (e. g. checking the brake fluid level or the engine oil level) because of risk of injury from live cables and rotating parts.

⚠Warning

The cooling fan is controlled by a thermoswitch and can therefore start unexpectedly even if the ignition is switched off. Risk of injury.

Electronic ignition systems generate very high voltages. Do not touch the ignition system; high voltage can be fatal.

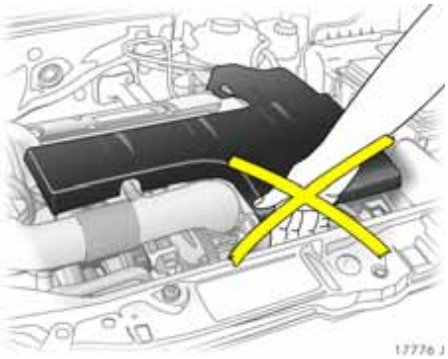
17776 J

Never carry out any repairs or adjustment and maintenance work on the vehicle yourself. This especially applies to the engine, chassis and safety parts. You may unwittingly infringe the provisions of the law and, by not performing the work properly, endanger yourself and other road users.

Checking and topping up fluids

To aid identification, the caps used when topping up engine oil, coolant and wash fluid as well as the oil dipstick are coloured yellow.

Downloaded from www.Manualslib.com manuals search engine

Ofrecido por www.electromanuales.com

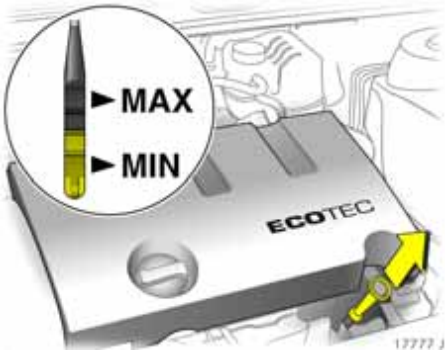

Engine oil

Information on engine oils is found in the Service Booklet.

Engine oil level and consumption
Every engine consumes engine oil for technical reasons. The engine oil consumption cannot be assessed until a fairly long distance has been driven, and may be above the specified value when the vehicle is first being driven (run-in period). Frequent driving at high revs increases engine oil consumption.

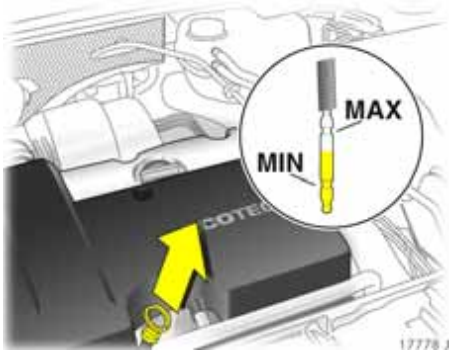

In vehicles with engine oil level monitoring ✻, the engine oil level is monitored automatically, see page 38. It is advisable to check the oil level before setting out on long journeys.

⚠Warning

It is the owner's responsibility to maintain the proper level of an appropriate quality oil in the engine.

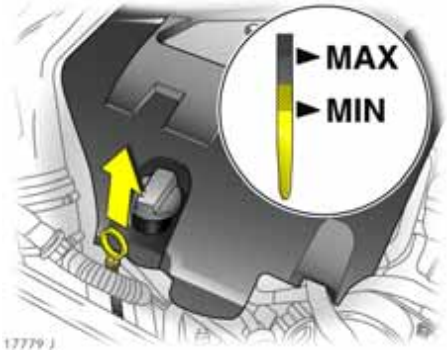

Checking the engine oil level, topping up engine oil
The figures on this page show examples of the checks for various petrol and diesel engines. Fig. 17780 J on the next page shows the checks for engine Z 30 DT[1].

The oil level must be checked with the vehicle on a level surface and with the engine (which must be at operating temperature) switched off. Wait at least 5 minutes before checking the level to allow the normal engine oil accumulation in the engine to drain into the oil pan.

[1] Sales designation – see page 285.

Downloaded from www.Manualslib.com manuals search engine

Ofrecido por www.electromanuales.com

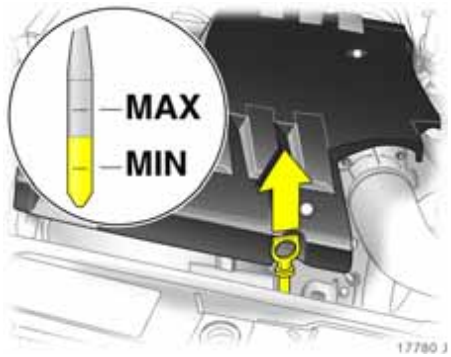

To check the engine oil level, insert wiped oil dipstick into handle as far as it will go. Top engine oil up if the level has dropped into the range of the top-up mark **MIN**.

The engine oil level must not exceed the upper mark **MAX** on the dipstick. Excess engine oil must be drained off or extracted. If the engine oil level is above the **MAX** mark there is a risk of damage to the engine or the catalytic converter.

The amount filled must be between the **MIN** and **MAX** marks – see page 308.

Top up with the same brand of engine oil that was used during the previous oil change, following the instructions in the service booklet.

To close, position the cap and screw it into place.

Capacities – see page 308.

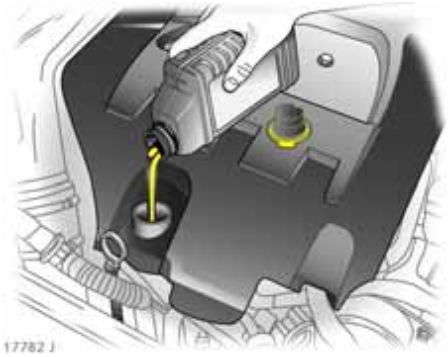

Engine oil change, oil filter change
Change the oil at the displayed service intervals.

We recommend that you use genuine Vauxhall engine oil filters.

⚠Warning

We recommend that you entrust engine oil and filter changes to a Vauxhall Authorised Repairer, who is familiar with legal requirements regarding disposal of used oil and oil filters and can thus help to protect both the environment and your health.

Downloaded from www.Manualslib.com manuals search engine

Ofrecido por www.electromanuales.com

Diesel fuel filter

Check fuel filter for any water residue when each engine oil change takes place. We recommend that you consult your Vauxhall Authorised Repairer.

For engines[1] Z 19 DT, Z 19 DTL and Z 19 DTH, control indicator illuminates if there is water in the diesel fuel filter.

Have fuel filter checked at shorter intervals if the vehicle is subjected to extreme operating conditions such as high humidity (primarily in coastal areas), extremely high or low outside temperatures and substantially varying daytime and night-time temperatures.

[1] Sales designation – see page 284.

Coolant

During operation the system is pressurised. The temperature may therefore rise briefly to over 100 °C.

The glycol-based coolant provides excellent corrosion protection for the heating and cooling systems as well as antifreeze protection down to –28 °C. It remains in the cooling system throughout the year and need not be changed.

Use of certain antifreezes can lead to engine damage. We therefore recommend that you use antifreezes that have been approved by Vauxhall.

⚠Warning

Antifreeze is a danger to health; it must therefore be kept in the original container and out of the reach of children.

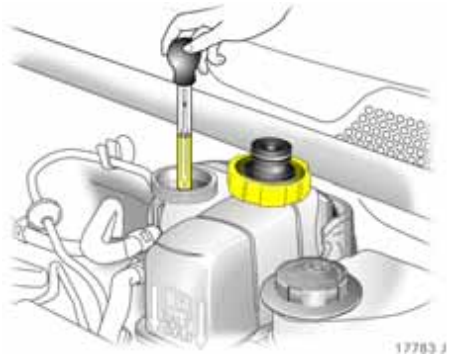

Antifreeze and corrosion protection
Before the start of the cold weather season, have the coolant checked for correct concentration. We recommend that you consult your Vauxhall Authorised Repairer. The amount of antifreeze must provide protection down to approx. –28 °C. If the antifreeze concentration is too low, this reduces protection from freezing and corrosion. Top up antifreeze if necessary.

If coolant loss is topped up with water, have concentration checked and add antifreeze if necessary.

Downloaded from www.Manualslib.com manuals search engine

Ofrecido por www.electromanuales.com

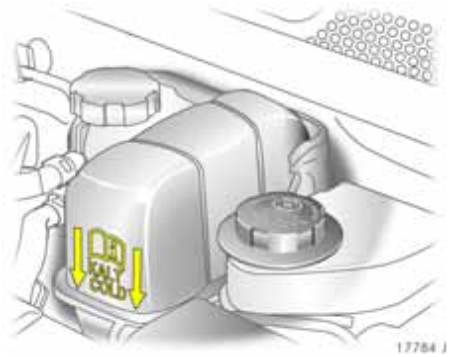

Coolant level
Hardly any losses occur since the cooling system is sealed and it is thus rarely necessary to top up the coolant.

4-cylinder petrol and diesel engines: When the cooling system is cold, the coolant level in the expansion tank should be slightly above the **KALT/COLD** mark. Coolant level can be read off from the outside of the expansion tank.

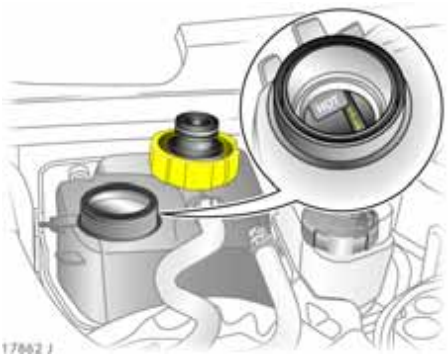

For V6 petrol and diesel engines, the expansion tank must be opened in order to check coolant level. When the cooling system is cold, the coolant should be up to the **COLD** mark on the filler opening.

⚠Warning

Allow engine to cool down before removing coolant filler cap. Remove filler cap carefully so that pressure can escape slowly, otherwise there is a risk of scalding.

When the engine is at operating temperature, coolant level rises. It falls again when the system cools. If it falls below the **KALT/COLD** mark when the system is cold, top up to the mark.

Top up antifreeze. If no antifreeze is available, top up with clean tap water. If tap water is unavailable, distilled water can be used.

After topping up with drinking water or distilled water, check anti-freeze concentration and add anti-freeze if necessary. Have cause of anti-freeze loss remedied. We recommend your Vauxhall Authorised Repairer.

To close, position the cap and screw it into place.

►

Downloaded from www.Manualslib.com manuals search engine

Ofrecido por www.electromanuales.com

Coolant temperature
If the temperature gauge enters the right-hand (warning) zone or control indicator illuminates, check the coolant level immediately.

- Coolant level low:
  Top up coolant. Pay attention to the instructions given under "Antifreeze and corrosion protection" and "Coolant level". Have the cause of coolant loss remedied. We recommend that you consult your Vauxhall Authorised Repairer.
- Coolant level OK:
  Have the cause of increased coolant temperature remedied. Consult a workshop. We recommend your Vauxhall Authorised Repairer.

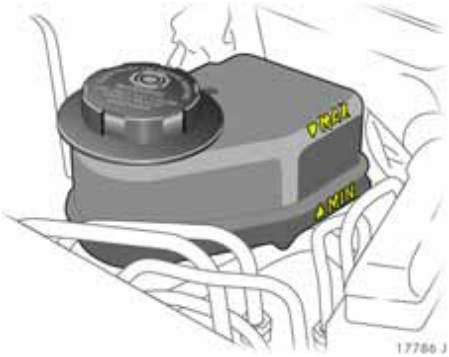

Brake fluid

Brake fluid level

⚠Warning

Brake fluid is poisonous and corrosive. Do not allow it to come into contact with eyes, skin, fabric or painted surfaces. Direct contact could cause injury and damage.

The fluid level in the reservoir must be neither higher than the **MAX** mark nor lower than the **MIN** mark.

The use of certain brake fluids can cause damage or loss of braking power. We therefore recommend the use of high-performance brake fluid that has been approved by Vauxhall if necessary.

Extreme cleanliness is needed when topping up, since contamination in the brake fluid can cause brake system malfunctions.

After correcting the brake fluid level, have the cause of brake fluid loss remedied. We recommend that you consult your Vauxhall Authorised Repairer.

Downloaded from www.Manualslib.com manuals search engine

Ofrecido por www.electromanuales.com

Brake fluid change
Brake fluid is hygroscopic, i.e. it absorbs water. If the brakes become hot, such as when driving on long downhill stretches, vapour bubbles can occur in the water, which can have an extremely adverse effect on braking power (depending on the proportion of water).

The fluid change intervals specified in the Service Booklet must therefore be observed.

⚠Warning

We recommend that you have brake fluid changed by a Vauxhall Authorised Repairer, who will be familiar with the requirements of the law as regards disposal of brake fluid and can thus help to protect the environment and your health.

Windscreen wiper

Clear vision is essential for safe driving.

Perform regular checks on the windscreen wiper and headlight wash systems ✻ to ensure they are operating correctly. We recommend wiper blade replacement at least once a year.

If the windscreen is dirty, operate the windscreen wash system before switching on the windscreen wiper or setting the wiper to automatic operation with the rain sensor ✻. This will avoid wiper blade wear.

Do not switch on the windscreen wiper or set them to automatic operation with the rain sensor ✻ if the windscreen is iced up as this could damage the wiper blades or the wiper system.

If the wiper becomes frozen on to the glass, we recommend that they be released with the aid of Vauxhall De-icer Spray.

Smearing wiper blades can be cleaned with a soft cloth and Vauxhall Windscreen Wash Solvent.

Wiper blades whose lips have become hardened, cracked or covered with silicone must be replaced. This may be necessary as a result of the effects of ice, thawing salt or heat, or the incorrect use of cleaning agents.

Switch off the windscreen wiper or automatic wiper with rain sensor ✻ in car washes, see pages 17, 279.

Windscreen wiper blade maintenance, see page 280.

►

Downloaded from www.Manualslib.com manuals search engine

Ofrecido por www.electromanuales.com

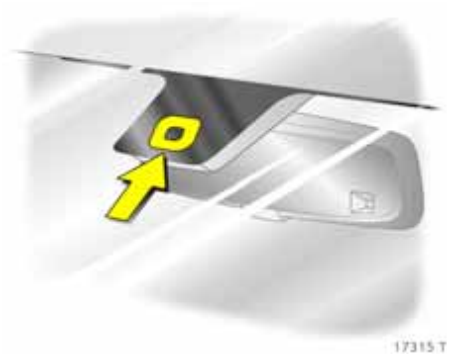

To ensure proper operation of the rain sensor ❇, the sensor area must be free from dust, dirt and ice. The windscreen wash system must also be operated at regular intervals and the sensor area must be de-iced. Vehicles with rain sensor ❇ can be identified by the sensor area near the top of the windscreen.

Service setting for front windscreen wiper (e.g. for changing or cleaning the front wiper blades).

Within 8 seconds of switching off the engine but with the key in the ignition switch, press the windscreen wiper stalk downward. Release the stalk as soon as the wiper blades are vertical.

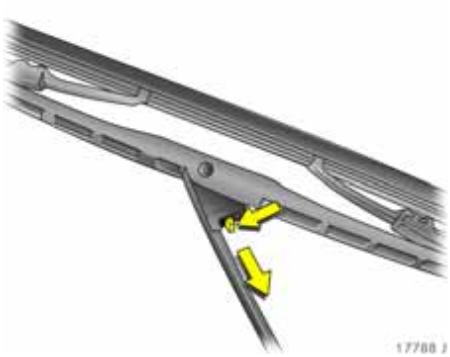

Wiper blades on the windscreen
Activating service position, see preceding column. Lift wiper arm. Press the release lever and detach the wiper blade.

Downloaded from www.Manualslib.com manuals search engine

Ofrecido por www.electromanuales.com

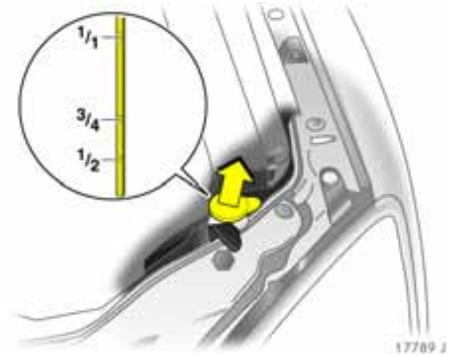

Windscreen and headlight wash systems ✻

The filler neck of the windscreen washing system and headlight washing system bottle ✻ is at the front left of the engine compartment next to the battery. The fluid level in the reservoir can be read off from the level indicator. Do not fill above $^{1}/_{1}$.

Capacities – see page 308.

Fill only with clean water to prevent the nozzles from clogging. To improve cleaning efficiency, we recommend that you add a little Vauxhall Windscreen Wash Solvent.

The windscreen wash system and headlight wash system will not freeze in winter:

Frost protection down to	Mixture Vauxhall Windscreen Wash Solvent: Water
– 5 °C	1: 3
– 10 °C	1: 2
– 20 °C	1: 1
– 30 °C	2: 1

When closing the reservoir, press the lid firmly over the beaded edge all the way round.

Downloaded from www.Manualslib.com manuals search engine

Ofrecido por www.electromanuales.com

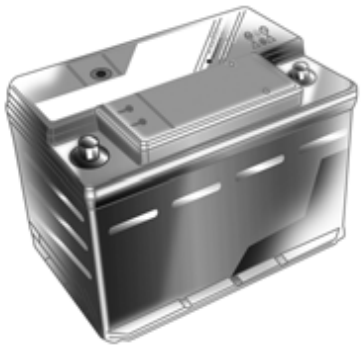

Battery

The battery is maintenance-free.

⚠Warning

We recommend that you have battery changes carried out by a Vauxhall Authorised Repairer. They know the laws concerning the disposal of used batteries and therefore protects the environment and your health.

Retrofitted electrical or electronic accessories can place an additional load on the battery or even discharge the battery. We recommend that you consult a Vauxhall Authorised Repairer regarding technical possibilities, such as fitting a more powerful battery.

Laying up the vehicle for more than 4 weeks can lead to battery discharge, which may reduce the service life of the battery. Disconnect battery from on-board power supply by detaching negative terminal (Vauxhall alarm system ✻ is then disabled).

Ensure that ignition is switched off before connecting battery. Then perform the following actions:

- Setting date and time in the information display – see pages 44, 47, 52.
- Activate window and sun roof electronics ✻ if necessary – see pages 138, 141.

In order to prevent the battery from discharging, some consumers such as the courtesy light automatically switch off after approx. 20 minutes.

Protecting electronic components

In order to prevent faults in electronic components in the electrical system, never connect or disconnect battery with engine running or ignition switched on. Never start engine with battery disconnected, e.g. when starting using jump leads.

To avoid damaging the vehicle, do not make any modifications to the electrical system, e.g. connecting additional consumers or tampering with electronic control units (chip tuning).

⚠Warning

Electronic ignition systems generate very high voltages. Do not touch the ignition system; high voltage can be fatal.

Disconnecting/connecting vehicle battery from/to electrical system

Disconnect the battery from the vehicle electrical system before charging: First detach the negative and then the positive lead. Do not reverse the polarity of the battery, i.e. do not confuse the terminals for the positive and negative leads. When connecting, start with the positive lead and then connect the negative lead.

Downloaded from www.Manualslib.com manuals search engine

Ofrecido por www.electromanuales.com

Vehicle decommissioning

Observe national regulations.

If the vehicle is decommissioned for several months, the following work must be carried out in order to prevent damage. We recommend that you consult your Vauxhall Authorised Repairer.

- Wash and preserve the vehicle – see page 279.
- Check corrosion protection in engine compartment and on underbody and repair if necessary.
- Clean and preserve rubber seals on bonnet and doors.
- Change engine oil see page 269.
- Check antifreeze and corrosion protection – see page 270.
- Check the coolant level, top up with antifreeze if necessary – see page 271.
- Empty windscreen wash system and headlight wash system.
- Increase tyre pressure to value specified for full load, see page 299.

Vehicle storage

- Park vehicle in dry, well ventilated place. With manual transmission or Easytronic ✻, engage 1st or reverse gear. With automatic transmission ✻, selector lever in **P**. Use chocks or the like to prevent the vehicle from rolling.
- Do not apply hand brake.
- Disconnect battery by disengaging negative terminal from vehicle electrical system – see page 276.

Vehicle recommissioning

Observe national regulations.

Perform the following work before recommissioning the vehicle:

- Connect battery – see page 276.
- Check tyre pressure and correct if necessary – see page 299.
- Fill up windscreen wash system – see page 275.
- Check engine oil level – see page 268.
- Check the coolant level; top up with antifreeze if necessary – see page 271.
- Fit the number plate if necessary.

Downloaded from www.Manualslib.com manuals search engine

Ofrecido por www.electromanuales.com

Vehicle care

Vehicle care aids ✻ 278
Washing 279
Waxing 279
Polishing 279
Wheels 279
Paintwork damage 280
..... 280
Exterior lights 280
Plastic and rubber parts 280
Wheels and tyres 280
Interior and upholstery 280
Seat belts 280
Windows 280
Windscreen wiper blades 281
Locks 281
Engine compartment 281
Underbody 281

Consult a Vauxhall Authorised Repairer with regard to care aids tested and recommended by Vauxhall.

When caring for your vehicle, observe all national environmental regulations, particularly when washing it.

Regular, thorough care helps to improve the appearance of your vehicle and maintain its value over the years. It is also prerequisite for warranty claims for any paint or corrosion damage. The following pages contain tips for vehicle care which, if used properly, will help combat the unavoidable damaging effects of the environment.

Vehicle care aids ✻

Vehicle wash:
- Wash brush
- Shampoo
- Sponge
- Insect Removal Sponge
- Chamois

Vehicle care:
- Paintwork Cleaner
- Paintwork Polish
- Cream Polish
- Metallic Paintwork Wax
- Hard wax
- Vauxhall Touch-Up Paint
- Vauxhall Touch-Up/Aerosol Paint
- Wheel Preserver
- Insect Remover
- Window Cleaner
- Vauxhall Windscreen Wash Solvent
- Silicone Oil for Rubber Seals
- Cleaner

Downloaded from www.Manualslib.com manuals search engine

Ofrecido por www.electromanuales.com

Washing

The paintwork of your vehicle is exposed to environmental influences, e.g. continuous changes in weather conditions, industrial waste gases and dust or thawing salts, so wash and wax your vehicle regularly. When using automatic car washes, select a programme which includes waxing.

Bird droppings, dead insects, resin, pollen and the like should be cleaned off immediately, as they contain aggressive constituents which can cause paint damage.

Please follow the wash system manufacturer's instructions when using wash systems. The windscreen wiper and the automatic wiper with rain sensor ✻ and the rear window wiper ✻ must be switched off – see page 16. Unscrew the antenna rod ✻ and the roof rack ✻, standing on the door sill to make them easier to reach.

If you wash your vehicle by hand, make sure that the insides of the wings are also thoroughly rinsed out.

Clean edges and folds on opened doors and flaps as well as the areas they cover.

Thoroughly rinse off and leather-off the vehicle. Rinse leather frequently. Use separate leathers for paint and window surfaces: remnants of wax on the windows will impair vision.

Observe national regulations.

Waxing

Wax your vehicle regularly, in particular after it has been washed using shampoo and at the latest when water no longer forms beads on the paintwork, otherwise the paintwork will dry out.

Also wax edges and folds on opened doors and flaps as well as the areas they cover.

Polishing

Polishing is necessary only if the paint has become dull or if solid deposits have become attached to it.

Paintwork polish with silicone forms a protective film, making waxing unnecessary.

Plastic body parts should not be treated with wax and polish.

Use Metallic Paintwork Wax on vehicles with a metallic-effect paint finish.

Wheels

Use a pH-neutral wheel cleaning agent to clean the wheels.

Wheels are painted and can be treated with the same agents as the body. For alloy wheels we recommend use of Alloy Wheel Preserver.

Downloaded from www.Manualslib.com manuals search engine

Ofrecido por www.electromanuales.com

Paintwork damage

Repair small areas of paint damage such as stone impacts, scratches etc. immediately using a Vauxhall touch-up applicator or Vauxhall spray and touch-up paint before rust can form. If rust has already formed, have the cause remedied. We recommend that you consult your Vauxhall Authorised Repairer. Please also pay attention to surfaces and edges beneath the vehicle where which rust may have formed unnoticed for some time.

Exterior lights

Headlight and other protective light bezels are made of plastic. If they require additional cleaning after the vehicle has been washed, clean them with Car Shampoo. Do not use any abrasive or caustic agents, do not use an ice scraper, and do not clean them dry.

Plastic and rubber parts

For additional cleaning of plastic and rubber parts use Cleaner. Do not use any other agent, and in particular do not use solvents or petrol.

Do not use high-pressure jet cleaners.

Wheels and tyres

Do not use high-pressure jet cleaners.

Interior and upholstery

Clean the vehicle interior, including the instrument panel fascia, using interior cleaner.

The instrument panel should only be cleaned using a soft damp cloth.

Clean fabric upholstery with a vacuum cleaner and brush. To remove stains, use cleaner that is suitable for both fabrics and vinyl.

Do not use cleaning agents such as acetone, tetrachloride, paint thinner, paint remover, nail varnish remover, washing powder or bleach. Petrol is also unsuitable. Open velcro fasteners on clothing could damage seat upholstery. Make sure that velcro fasteners are closed.

Seat belts

Always keep seat belts clean and dry.

Clean only with lukewarm water or Cleaner.

Windows

When cleaning the heated rear window, make sure that the heating element on the inside of the window is not damaged.

Use a soft lint-free cloth or chamois leather in conjunction with Window Cleaner and Insect Remover.

Vauxhall Windscreen Wash Solvent is suitable for de-icing windows.

For mechanical removal of ice, use a commercially available sharp-edged ice scraper. Press the scraper firmly against the glass so that no dirt can get under it and scratch the glass.

Downloaded from www.Manualslib.com manuals search engine

Ofrecido por www.electromanuales.com

Windscreen wiper blades

Wax, such as that used in car washes, can cause streaks to form on the windscreen when the wiper are used.

Smearing wiper blades can be cleaned with a soft cloth and Vauxhall Windscreen Wash Solvent, and replaced if necessary – see page 273.

Locks

The locks are lubricated with a high-grade lock cylinder grease at the factory. Vauxhall lock cylinder grease prevents the locks from freezing up. Only use de-icing agent in emergencies, as they have a degreasing effect and will impair the function of the locks. After using a de-icing agent, have the locks re-greased. We recommend that you entrust this to your Vauxhall Authorised Repairer.

Engine compartment

Areas of the engine compartment that are painted in the same colour as the vehicle must be looked after like any other painted surface.

It is advisable to wash the engine compartment before and after winter and preserve it with wax. Cover alternator and brake fluid reservoir with plastic sheets before washing the engine.

When washing the engine with a steam jet, do not direct the jet at components of the anti-lock brake system, the air conditioning system, the climate control system, the auxiliary heater or the belt drive or its components.

Protective wax that has been applied is also removed during the engine wash. For this reason, have the engine, brake system components in the engine compartment, axle components with steering, body parts and cavities thoroughly preserved with protective wax after the wash. We recommend that you consult your Vauxhall Authorised Repairer.

An engine wash can be performed in the spring in order to remove dirt that has adhered to the engine compartment, which may also have a high salt content. Check protective wax layer and make good if necessary.

Do not use high-pressure jet cleaners.

Underbody

Your vehicle has a factory-applied PVC undercoating in the wheel arches (including the longitudinal members) which provides permanent protection and needs no special maintenance.

The surfaces of the vehicle underbody not covered by PVC are provided a durable protective wax coating in critical areas.

On vehicles which are washed frequently in automatic car washes with underbody washing facility, the protective wax coating may be impaired by dirt-dissolving additives, so check the underbody after washing and have it waxed if necessary. Before the start of the cold weather season, check the PVC coating and protective wax coating and, if necessary, have them restored to perfect condition.

Caution - commercially available bitumen/ rubber materials can damage the PVC coating. We recommend that you have underbody work carried out by a Vauxhall Authorised Repairer, who knows the prescribed materials and has experience in the use thereof.

The underbody should be washed following the end of the cold weather season to remove any dirt adhering to the underbody since this may also contain salt. Check protective wax coating and, if necessary, have it restored to perfect condition.

Downloaded from www.Manualslib.com manuals search engine

Ofrecido por www.electromanuales.com

Technical Data

Vehicle documents, identification plate 282
Vehicle identification data..... 283
Coolant, brake fluid, oils 283
Engine data..... 284
Performance..... 286
Fuel consumption, CO_2 emissions 288
Weights, payload and roof load 293
Tyres 299
Electrical system 307
Capacities 308
Dimensions 310
Installation dimensions of trailer towing equipment..... 311

Vehicle documents, identification plate

The technical data is determined in accordance with European Community standards. We reserve the right to make modifications. Specifications in the vehicle documents always have priority over those given in this manual.

The identification plate is affixed to the front right door frame.

Information on identification plate:

1 Manufacturer
2 Type approval number
3 Vehicle identification number
4 Permissible gross vehicle weight
5 Permissible gross train weight
6 Maximum permissible front axle load
7 Maximum permissible rear axle load
8 Vehicle-specific or country-specific data

Downloaded from www.Manualslib.com manuals search engine

Ofrecido por www.electromanuales.com

Vehicle identification data

The vehicle identification number is stamped on the identification plate (see previous page) and in the vehicle floor on the right-hand side under a cover between the driver's door and seat.

In other design variants, the identification plate may also be affixed to the dashboard.

Engine code and engine number: stamped on left-hand side of engine on crankcase.

Coolant, brake fluid, oils

When topping up
- coolant,
- brake fluid,
- manual transmission oil,
- automatic transmission oil,
- power steering oil

we recommend that you consult your Vauxhall Authorised Repairer, who can advise you on the correct products to use.

Use of unsuitable fluids can cause serious damage to the vehicle.

Engine oils
Information on engine oils is found in the Service Booklet.

Downloaded from www.Manualslib.com manuals search engine

Ofrecido por www.electromanuales.com

Engine data

Sales designation **Engine identifier code**	1.8 **Z 18 XE**	1.8 **Z 18 XER**	2.0 Turbo **Z 20 NET**	2.2 **Z 22 SE**	2.2 DIRECT **Z 22 YH**	2.8 V6 **Z 28 NEL**
Number of cylinders	4	4	4	4	4	6
Piston displacement (cm^3)	1796	1796	1998	2198	2198	2792
Brake horse power (kW/bhp) at rpm	90 6000	103 6300	129 5500	108 5600	114 5600	169 5500
Torque (Nm) at rpm	167 3800	175 3800	265 2500 to 3800	203 4000	220 3800	330 1800 to 4500
Type of fuel	Petrol	Petrol	Petrol	Petrol	Petrol	Petrol
Octane requirement (RON)[1] unleaded or unleaded or unleaded	 **95** 98[2] 91[2)3)]	 **95** 98[2] 91[2)3)]	 **95** 98[2] 91[2)4)]	 **95** 98[2] 91[2)4)]	 **95**[5] 98[2] –[6]	 **95** 98[2] 91[2)3)]
Max. permissible engine speed, continuous operation (rpm) approx.	6500	6500	6200	6500	6500	6700
Engine oil consumption (l/1000 km)	0.6	0.6	0.6	0.6	0.6	0.6

1) Standard high-quality fuels, e.g. unleaded DIN EN 228; value printed in bold: recommended fuel.
2) Knock control system automatically adjusts ignition timing according to type of fuel used (octane number).
3) Slight reduction in engine output and torque if 91 RON is used.
4) If no unleaded Premium fuel is available, 91 RON can be used to avoid high engine load or full load as well as for driving in mountainous terrain with a caravan/trailer load or high payload.
5) The use of fuel that is at least 95 RON is prescribed.
6) 91 octane fuel must not be used.

Downloaded from www.Manualslib.com manuals search engine

Ofrecido por www.electromanuales.com

Engine data

Sales designation **Engine identifier code**	2.8 V6 **Z 28 NET**	VXR **Z 28 NET**	1.9 CDTI **Z 19 DTL**	1.9 CDTI **Z 19 DT**	1.9 CDTI **Z 19 DTH**	3.0 CDTI **Z 30 DT**
Number of cylinders	6	6	4	4	4	6
Piston displacement (cm^3)	2792	2792	1910	1910	1910	2958
Brake horse power (kW/bhp) at rpm	184 5500	206 5500	74 3500	88 3500 to 4000	110 4000	135 4000
Torque (Nm) at rpm	350 1800 to 4500	355 1800 to 4500	260 1700 to 2500	280 2000 to 2750	320 2000 to 2750	400 1900 to 2700
Type of fuel	Petrol	Petrol	Diesel	Diesel	Diesel	Diesel
Octane requirement (RON)[1)] unleaded or unleaded or unleaded Cetane requirement (CN)[1)]	 **95** 98[2)] 91[2)3)] –	 95[4)] **98**[2)] –[5)] –	 – – – **49 (D)**[6)]	 – – – **49 (D)**[4)]	 – – – **49 (D)**[4)]	 – – – **49 (D)**[4)]
Max. permissible engine speed, continuous operation (rpm) approx.	6700	6700	5100	5100	5100	5000
Engine oil consumption (l/1000 km)	0.6	0.6	0.6	0.6	0.6	0.6

1) Standard high-quality fuels, e.g. unleaded DIN EN 228, Diesel DIN EN 590; value printed in bold: recommended fuel.
2) Knock control system automatically adjusts ignition timing according to type of fuel used (octane number).
3) Slight reduction in engine output and torque if 91 RON is used.
4) Slight reduction in engine output and torque if 95 RON is used.
5) 91 octane fuel must not be used.
6) A lower value is possible with winter fuels.

Downloaded from www.Manualslib.com manuals search engine

Ofrecido por www.electromanuales.com

Performance

(approx. mph / km/h), **Saloon / hatch**

Engine[1]	Z 18 XE	Z 18 XER	Z 20 NET	Z 22 SE	Z 22 YH	Z 28 NEL
Maximum speed[2]						
Manual transmission	126/203	130/210	–	134/216	136/218	155/250
Sports transmission	127/205	130/210	143/230	–	136/218	–
Easytronic	–	129/207	–	–	–	–
Automatic transmission	–	–	–	130/210	130/210	155/250

Engine[1]	Z 28 NET	Z 28 NET VXR	Z 19 DTL	Z 19 DT	Z 19 DTH	Z 30 DT
Maximum speed[2]						
Manual transmission	155/250[3]	155/250[3]	116/186	124/200	135/217	143/230
Sports transmission	–	–	–	–	–	–
Easytronic	–	–	–	–	–	–
Automatic transmission	155/250[3]	155/250[3]	–	–	130/210	140/226

[1] Sales designation – see pages 284, 285.
[2] The maximum speed indicated is achievable at kerb weight (without driver) plus 200 kg payload. Optional equipment could reduce the specified maximum speed of the vehicle.
[3] The maximum speed is limited electronically.

Downloaded from www.Manualslib.com manuals search engine

Ofrecido por www.electromanuales.com

Performance

(approx. mph / km/h), **estate**

Engine[1]	Z 18 XE	Z 18 XER	Z 20 NET	Z 22 YH	Z 28 NEL	Z 28 NET
Maximum speed[2]						
Manual transmission	–	126/203	–	130/210	152/245	155/250[3]
Sports transmission	124/199	130/209	139/224	130/210	–	–
Easytronic	–	128/207	–	–	–	–
Automatic transmission	–	–	–	129/208	152/245	155/250[3]

Engine[1]	Z 28 NET VXR	Z 19 DTL	Z 19 DT	Z 19 DTH	Z 30 DT
Maximum speed[2]					
Manual transmission	155/250[3]	113/182	121/195	130/210	140/225
Sports transmission	–	–	–	–	–
Easytronic	–	–	–	–	–
Automatic transmission	155/250[3]	–	–	129/208	137/221

[1] Sales designation – see pages 284, 285.
[2] The maximum speed indicated is achievable at kerb weight (without driver) plus 200 kg payload. Optional equipment could reduce the specified maximum speed of the vehicle.
[3] The maximum speed is limited electronically.

Downloaded from www.Manualslib.com manuals search engine

Ofrecido por www.electromanuales.com

Fuel consumption, CO_2 emissions

Directive 80/1268/EEC (last changed by 1999/100/EC) has applied for the measurement of fuel consumption since 1996.

The directive is oriented to actual driving practices: Urban driving is rated at approx. $^1/_3$ and extra urban driving with approx. $^2/_3$ (urban and extra-urban consumption). Cold starts and acceleration phases are also taken into consideration.

The specification of CO_2 emission is also a constituent of the directive.

The figures given must not be taken as a guarantee for the actual fuel consumption of a particular vehicle.

All values are based on the EU base model with standard equipment.

The calculation of fuel consumption as specified by directive 1999/100/EC takes account of the vehicle's kerb weight, ascertained in accordance with these regulations. Optional extras may result in slightly higher fuel consumption and CO_2 emission levels than those quoted.

To convert l/100 km into mpg, divide 282 by the number of litres/ 100 km

Saving fuel, protecting the environment – see page 188.

Downloaded from www.Manualslib.com manuals search engine

Ofrecido por www.electromanuales.com

Fuel consumption (approx. l/100 km), **CO_2 emissions** (approx. g/km), **Saloon 4-door** (tyre width up to 225 mm)

Engine[1]	Z 18 XE	Z 18 XER	Z 20 NET	Z 22 SE	Z 22 YH
Manual/sports/Easytronic/automatic transmission					
urban	10,4/10,7/–/–	10,1/ 9,9/ 9,7/–	–/12,5/–/–	–/11,4/–/13,3	10,3/10,3/–/11,3
extra-urban	5,5/ 5,8/–/–	5,5/ 5,6/ 5,4/–	–/ 6,3/–/–	–/ 6,2/–/ 6,5	6,0/ 5,9/–/ 6,1
total	7,3/ 7,6/–/–	7,2/ 7,2/ 7,0/–	–/ 8,6/–/–	–/ 8,1/–/ 9,0	7,6/ 7,5/–/ 8,0
CO_2	175/ 182/–/–	173/ 173/ 168/–	–/ 206/–/–	–/ 194/–/ 216	182/ 180/–/ 192

Engine[1]	Z 28 NEL	Z 28 NET	Z 19 DTL	Z 19 DT	Z 19 DTH	Z 30 DT
Manual/sports/Easytronic/automatic transmission						
urban	15,4/–/–/17,1	15,4/–/–/17,1	7,4/–/–/–	7,4/–/–/–	7,4/–/–/ 9,4	9,8/–/–/10,2
extra-urban	7,3/–/–/ 7,3	7,3/–/–/ 7,3	4,7/–/–/–	4,7/–/–/–	4,7/–/–/ 5,3	5,2/–/–/ 5,3
total	10,3/–/–/10,9	10,3/–/–/10,9	5,7/–/–/–	5,7/–/–/–	5,7/–/–/ 6,8	6,9/–/–/ 7,1
CO_2	247/–/–/ 262	247/–/–/ 262	154/–/–/–	154/–/–/–	154/–/–/184	186/–/–/ 192

Fuel consumption (approx. l/100 km), **CO_2 emissions** (approx. g/km), **Saloon 4-door** (tyre width up to 235 mm)

Engine[1]	Z 18 XE	Z 18 XER	Z 20 NET	Z 22 SE	Z 22 YH
Manual/sports/Easytronic/automatic transmission					
urban	10,5/10,8/–/–	10,2/10,0/ 9,8/–	–/12,6/–/–	–/11,5/–/13,4	10,4/10,4/–/11,4
extra-urban	5,6/ 5,9/–/–	5,6/ 5,7/ 5,5/–	–/ 6,4/–/–	–/ 6,3/–/ 6,6	6,1/ 6,0/–/ 6,2
total	7,4/ 7,7/–/–	7,3/ 7,3/ 7,1/–	–/ 8,7/–/–	– / 8,2/–/ 9,1	7,7/ 7,6/–/ 8,1
CO_2	178/ 185/–/–	175/ 175/170/–	–/ 209/–/–	– /197/–/ 218	185/ 182/–/ 194

Engine[1]	Z 28 NEL	Z 28 NET	Z 19 DTL	Z 19 DT	Z 19 DTH	Z 30 DT
Manual/sports/Easytronic/automatic transmission						
urban	15,5/–/–/17,2	15,5/–/–/17,2	7,5/–/–/–	7,5/–/–/–	7,5/–/–/ 9,5	9,9/–/–/10,3
extra-urban	7,4/–/–/ 7,4	7,4/–/–/ 7,4	4,8/–/–/–	4,8/–/–/–	4,8/–/–/ 5,4	5,3/–/–/ 5,4
total	10,4/–/–/11,0	10,4/–/–/11,0	5,8/–/–/–	5,8/–/–/–	5,8/–/–/ 6,9	7,0/–/–/ 7,2
CO_2	250/–/–/ 264	250/–/–/ 264	157/–/–/–	157/–/–/–	157/–/–/186	189/–/–/ 194

[1] Sales designation – see pages 284, 285.

Downloaded from www.Manualslib.com manuals search engine

Ofrecido por www.electromanuales.com

Fuel consumption (approx. l/100 km)**, CO_2 emissions** (approx. g/km)**, Hatch 5-door** (tyre width up to 225 mm)

Engine[1]	**Z 18 XE**	**Z 18 XER**	**Z 20 NET**	**Z 22 SE**
Manual/sports/Easytronic/automatic transmission				
urban	10,4/10,7/–/–	10,1/ 9,9/ 9,7/–	–/12,5/–/–	– /11,4/–/13,3
extra-urban	5,5/ 5,8/–/–	5,5/ 5,6/ 5,4/–	–/ 6,3/–/–	– / 6,2/–/ 6,5
total	7,3/ 7,6/–/–	7,2/ 7,2/ 7,0/–	–/ 8,6/–/–	– / 8,1/–/ 9,0
CO_2	175/ 182/–/–	173/173/168/–	–/ 206/–/–	– / 194/–/ 216

Engine[1]	**Z 22 YH**	**Z 28 NEL**	**Z 28 NET**	**Z 28 NET VXR**
Manual/sports/Easytronic/automatic transmission				
urban	10,3/10,3/–/11,3	15,4/–/–/17,1	15,4/–/–/17,1	15,4/–/–/[2]
extra-urban	6,0/ 5,9/–/ 6,1	7,3/–/–/ 7,3	7,3/–/–/ 7,3	7,3/–/–/[2]
total	7,6/ 7,5/–/ 8,0	10,3/–/–/10,9	10,3/–/–/10,9	10,3/–/–/[2]
CO_2	182/ 180/–/ 192	247/–/–/ 262	247/–/–/ 262	247/–/–/[2]

Engine[1]	**Z 19 DTL**	**Z 19 DT**	**Z 19 DTH**	**Z 30 DT**
Manual/sports/Easytronic/automatic transmission				
urban	7,4/–/–/–	7,4/–/–/–	7,4/–/–/ 9,5	9,8/–/–/10,2
extra-urban	4,7/–/–/–	4,7/–/–/–	4,7/–/–/ 5,4	5,2/–/–/ 5,3
total	5,7/–/–/–	5,7/–/–/–	5,7/–/–/ 6,9	6,9/–/–/ 7,1
CO_2	154/–/–/–	154/–/–/–	154/–/–/186	186/–/–/ 192

[1] Sales designation – see pages 284, 285.
[2] Values not available at time of printing.

Downloaded from www.Manualslib.com manuals search engine

Ofrecido por www.electromanuales.com

Fuel consumption (approx. l/100 km), **CO_2 emissions** (approx. g/km), **Hatch 5-door** (tyre width up to 235 mm)

Engine[1]	**Z 18 XE**	**Z 18 XER**	**Z 20 NET**	**Z 22 SE**
Manual/sports/Easytronic/automatic transmission				
urban	10,5/10,8/–/–	10,2/10,0/ 9,8/–	–/12,6/–/–	– /11,5/–/13,4
extra-urban	5,6/ 5,9/–/–	5,6/ 5,7/ 5,5/–	–/ 6,4/–/–	– / 6,3/–/ 6,6
total	7,4/ 7,7/–/–	7,3/ 7,3/ 7,1/–	–/ 8,7/–/–	– / 8,2/–/ 9,1
CO_2	178/ 185/–/–	175/ 175/ 170/–	–/ 209/–/–	– / 197/–/ 218
Engine[1]	**Z 22 YH**	**Z 28 NEL**	**Z 28 NET**	**Z 28 NET VXR**
Manual/sports/Easytronic/automatic transmission				
urban	10,4/10,4/–/11,4	15,5/–/–/17,2	15,5/–/–/17,2	15,4/–/–/[2]
extra-urban	6,1/ 6,0/–/ 6,2	7,4/–/–/ 7,4	7,4/–/–/ 7,4	7,3/–/–/[2]
total	7,7/ 7,6/–/ 8,1	10,4/–/–/ 11,0	10,4/–/–/11,0	10,3/–/–/[2]
CO_2	185/ 182/–/ 194	250/–/–/ 264	250/–/–/ 264	247/–/–/[2]
Engine[1]	**Z 19 DTL**	**Z 19 DT**	**Z 19 DTH**	**Z 30 DT**
Manual/sports/Easytronic/automatic transmission				
urban	7,5/–/–/–	7,5/–/–/–	7,5/–/–/ 9,6	9,9/–/–/10,3
extra-urban	4,8/–/–/–	4,8/–/–/–	4,8/–/–/ 5,5	5,3/–/–/ 5,4
total	5,8/–/–/–	5,8/–/–/–	5,8/–/–/ 7,0	7,0/–/–/ 7,2
CO_2	157/–/–/–	157/–/–/–	157/–/–/189	189/–/–/ 194

[1] Sales designation – see pages 284, 285.
[2] Values not available at time of printing.

Downloaded from www.Manualslib.com manuals search engine

Ofrecido por www.electromanuales.com

Fuel consumption (approx. l/100 km), **CO_2 emissions** (approx. g/km), **Estate** (tyre width up to 225 mm)

Engine[1]	Z 18 XE	Z 18 XER	Z 20 NET	Z 22 YH	Z 28 NEL
Manual/sports/Easytronic/automatic transmission					
urban	–/11,0/–/–	10,3/10,4/10,0/–	–/12,7/–/–	10,6/10,6/–/11,5	15,5/–/–/17,4
extra-urban	–/ 6,1/–/–	5,9/ 6,1/ 5,7/–	–/ 6,5/–/–	6,3/ 6,2/–/ 6,3	7,4/–/–/ 7,6
total	–/ 7,9/–/–	7,5/ 7,7/ 7,3/–	–/ 8,8/–/–	7,9/ 7,8/–/ 8,2	10,4/–/–/11,2
CO_2	–/ 190/–/–	180/ 185/ 175/–	–/ 211/–/–	190/ 187/–/ 197	250/–/–/ 269

Engine[1]	Z 28 NET	Z 28 NET VXR	Z 19 DTL	Z 19 DT	Z 19 DTH	Z 30 DT
Manual/sports/Easytronic/automatic transmission						
urban	15,5/–/–/17,4	15,5/–/–/[2]	7,5/–/–/–	7,5/–/–/–	7,5/–/–/ 9,6	9,8/–/–/10,3
extra-urban	7,4/–/–/ 7,6	7,4/–/–/[2]	4,8/–/–/–	4,8/–/–/–	4,8/–/–/ 5,5	5,2/–/–/ 5,4
total	10,4/–/–/11,2	10,4/–/–/[2]	5,8/–/–/–	5,8/–/–/–	5,8/–/–/ 7,0	6,9/–/–/ 7,2
CO_2	250/–/–/ 269	250/–/–/[2]	157/–/–/–	157/–/–/–	157/–/–/189	186/–/–/ 194

Fuel consumption (approx. l/100 km), **CO_2 emissions** (approx. g/km), **estate** (tyre width up to 235 mm)

Engine[1]	Z 18 XE	Z 18 XER	Z 20 NET	Z 22 YH	Z 28 NEL
Manual/sports/Easytronic/automatic transmission					
urban	–/11,1/–/–	10,4/10,5/10,1/–	–/12,8/–/–	10,7/10,7/–/11,6	15,6/–/–/17,5
extra-urban	–/ 6,2/–/–	6,0/ 6,2/ 5,8/–	–/ 6,6/–/–	6,4/ 6,3/–/ 6,4	7,5/–/–/ 7,7
total	–/ 8,0/–/–	7,6/ 7,8/ 7,4/–	–/ 8,9/–/–	8,0/ 7,9/–/ 8,3	10,5/–/–/11,3
CO_2	–/192/–/–	182/ 187/ 178/–	–/ 214/–/–	192/ 190/–/ 199	252/–/–/ 271

Engine[1]	Z 28 NET	Z 28 NET VXR	Z 19 DTL	Z 19 DT	Z 19 DTH	Z 30 DT
Manual/sports/Easytronic/automatic transmission						
urban	15,6/–/–/17,5	15,5/–/–/[2]	7,6/–/–/–	7,6/–/–/–	7,6/–/–/ 9,7	9,9/–/–/10,4
extra-urban	7,5/–/–/ 7,7	7,4/–/–/[2]	4,9/–/–/–	4,9/–/–/–	4,9/–/–/ 5,6	5,3/–/–/ 5,5
total	10,5/–/–/11,3	10,4/–/–/[2]	5,9/–/–/–	5,9/–/–/–	5,9/–/–/ 7,1	7,0/–/–/ 7,3
CO_2	252/–/–/ 271	250/–/–/[2]	159/–/–/–	159/–/–/–	159/–/–/192	189/–/–/ 197

[1] Sales designation – see pages 284, 285.
[2] Values not available at time of printing.

Downloaded from www.Manualslib.com manuals search engine

Ofrecido por www.electromanuales.com

Weights, payload and roof load

The payload is the difference between the permitted gross vehicle weight (see identification plate, page 282) and the EC kerb weight.

To calculate the kerb weight, enter the data for your vehicle below:

- Kerb weight from Table 1, pages 294, 296 +..... kg
- Additional weight of equipment versions from Table 2, page 297 +..... kg
- Weight of heavy accessories from Table 3, page 298 +..... kg

The total =..... kg

is the EC kerb weight.

Optional equipment and accessories increase the kerb weight, which means that the payload will also change slightly.

Pay attention to weight ranges in vehicle documents and on identification plate.

The combined total of front and rear axle loads must not exceed the permissible gross vehicle weight. For example, if the front axle is bearing its maximum permissible load, the rear axle can only bear a load that is equal to the gross vehicle weight minus the front axle load.

When the caravan/trailer is coupled and the towing vehicle fully loaded (including all occupants), the permissible rear axle load (see identification plate or vehicle documents) may be exceeded by 40 kg. If the permissible rear axle load is exceeded, a maximum speed of 60 mph (100 km/h) applies. If national regulations specify a lower maximum speed for vehicles towing a caravan/trailer, this must be observed.

See the identification plate or vehicle documents for permissible axle loads.

Roof load

The permitted roof load for the saloon is 90 kg, for the estate without roof railing it is 75 kg, and for the estate with roof railing it is 100 kg. The roof load consists of the combined weight of the roof rack and the load.

Driving hints – see page 186.

Roof rack, see page 220.

Downloaded from www.Manualslib.com manuals search engine

Ofrecido por www.electromanuales.com

Weights (kg): Table 1, kerb weight[1], Saloon

Model	Engine[2]	4-door Manual transmission	Easytronic	Automatic transmission
Vectra with climate control	Z 18 XE	1395	–	–
	Z 18 XER	1395	1395	–
	Z 20 NET	1505	–	–
	Z 22 SE	1460	–	1490
	Z 22 YH	1460	–	1490
	Z 28 NEL	1565	–	1590
	Z 28 NET	1565	–	1590
	Z 19 DTL	1505	–	–
	Z 19 DT	1505	–	–
	Z 19 DTH	1503	–	1523
	Z 30 DT	1635	–	1660

[1] According to EC Directive, including assumed weights for driver (68 kg), luggage (7 kg) and all fluids (tank 90% full).
[2] Sales designation – see pages 284, 285.

Downloaded from www.Manualslib.com manuals search engine

Ofrecido por www.electromanuales.com

Weights (kg): Table 1, kerb weight[1], Hatch

Model	Engine[2]	5-door Manual transmission	Easytronic	Automatic transmission
Vectra with climate control	Z 18 XE	1393	–	–
	Z 18 XER	1393	1393	–
	Z 20 NET	1503	–	–
	Z 22 SE	1475	–	1505
	Z 22 YH	1475	–	1505
	Z 28 NEL	1580	–	1605
	Z 28 NET	1580	–	1605
	Z 19 DTL	1503	–	–
	Z 19 DT	1503	–	–
	Z 19 DTH	1523	–	1548
	Z 30 DT	1650	–	1675

[1] According to EC Directive, including assumed weights for driver (68 kg), luggage (7 kg) and all fluids (tank 90% full).
[2] Sales designation – see pages 284, 285.

Downloaded from www.Manualslib.com manuals search engine

Ofrecido por www.electromanuales.com

Weights (kg): Table 1, Kerb weight[1], Estate

Model	Engine[2]	Estate Manual transmission	Easytronic	Automatic transmission
Vectra with climate control	Z 18 XE	1475	–	–
	Z 18 XER	1475	1475	–
	Z 20 NET	1570	–	–
	Z 22 YH	1523	–	1553
	Z 28 NEL	1613	–	1638
	Z 28 NET	1613	–	1638
	Z 19 DTL	1585	–	–
	Z 19 DT	1585	–	–
	Z 19 DTH	1600	–	1613
	Z 30 DT	1685	–	1710

[1] According to EC Directive, including assumed weights for driver (68 kg), luggage (7 kg) and all fluids (tank 90% full).
[2] Sales designation – see pages 284, 285.

Downloaded from www.Manualslib.com manuals search engine

Ofrecido por www.electromanuales.com

Weights (kg): Table 2, Additional weight of equipment versions

Saloon / Hatch

Engine[1]	Z 18 XE, Z 18 XER	Z 20 NET	Z 22 SE	Z 22 YH	Z 28 NEL	Z 28 NET
Life	16	16	16	16	16	16
Exclusiv	32	32	32	32	32	32
Design/Elite	31	31	31	31	31	31
SRi	28	28	28	28	28	28

Engine[1]	Z 19 DTL	Z 19 DT	Z 19 DTH	Z 30 DT
Life	16	16	16	6
Exclusiv	32	32	32	22
Design/Elite	31	31	31	21
SRi	28	28	28	26

Estate

Engine[1]	Z 18 XE, Z 18 XER	Z 20 NET	Z 22 YH	Z 28 NEL	Z 28 NET	Z 19 DTL	Z 19 DT	Z 19 DTH	Z 30 DT
Life	5	5	5	5	5	5	5	5	3
Exclusiv	22	22	22	22	22	22	22	22	20
Design/Elite	27	27	27	27	27	27	27	27	25
SRi	23	23	23	23	23	23	23	23	26

[1] Sales designation – see pages 284, 285.

Downloaded from www.Manualslib.com manuals search engine

Ofrecido por www.electromanuales.com

Weights (kg), Table 3, Heavy accessories

Saloon / Hatch

Accessories	Sun roof	Towing equipment
Weight	17	23

Estate

Accessories	Sun roof	Towing equipment
Weight	18	33

Downloaded from www.Manualslib.com manuals search engine

Ofrecido por www.electromanuales.com

Tyres

Restrictions

Not all tyres available on the market currently meet the structural requirements. We recommend that you consult a Vauxhall Authorised Repairer concerning suitable tyre makes.

These tyres have undergone special tests to establish their reliability, safety and specific suitability for Vauxhall vehicles. Despite continuous market monitoring, we are unable to assess these attributes for other tyres, even if they have been granted approval by the relevant authorities or in some other form.

Further information – see page 214.

Winter tyres ✻

Tyres of size 215/50 R 17, 225/45 R 18 and 235/35 R 19 are not to be used as winter tyres.

Only the winter tyres specified on page 306 may be used on vehicles factory-fitted with 235/35 R 19 tyres.

For Vectra VXR, tyres of size 225/45 R 17 on a Vauxhall-approved alloy wheel with designation 7x17, ET39 as well as tyres of size 235/40 R 18 are permissible as winter tyres.

If winter tyres are in use, the spare wheel may still be fitted with a summer tyre. Use of the spare wheel may alter vehicle handling. Obtain a replacement for the faulty tyre as soon as possible, and have the wheel balanced and fitted to the vehicle.

Further information – see page 219.

Tyre chains ✻

Restrictions

Tyre chains may be used on the front wheels only.

We recommend the use of Vauxhall-tested fine-mesh tyre chains that add no more than 10 mm to the tyre tread and the inboard sides (including chain lock).

Tyre chains are not permitted on tyre sizes 115/70 R 16, 215/50 R 17, 225/45 R 18, 235/40 R 18 and 235/35 R 19.

Further information – see page 219.

Wheels

Wheel bolt tightening torque: 110 Nm.

On vehicles with alloy wheels ✻ the spare wheel may have a steel rim.

Depending on the version, the spare wheel will be in the form of a temporary spare wheel. The vehicle may handle differently if a spare wheel has been fitted.

The spare wheel can be equipped with a smaller tyre and a smaller rim[1]: the vehicle may handle differently if the spare wheel has been fitted.

Replace defective tyre as soon as possible, balance wheel and fit to vehicle.

Tyre pressure in bar/psi

The specified tyre pressures are valid for cold tyres. The increased tyre pressure resulting from extensive driving must not be reduced. The tyre pressures specified on the following pages apply to both summer and winter tyres.

Always inflate the spare wheel to the tyre pressure for full load - see tables on following pages.

Temporary spare wheel tyre pressure - see tables on next page.

In vehicles with tyre pressure monitoring system ✻ there is an adapter in the valve cap key. Screw adapter to valve before attaching tyre pressure gauge – see page 215.

Further information – see pages 214 to 219.

[1] Country-specific version: The spare wheel is only to be used as a temporary spare wheel.

Downloaded from www.Manualslib.com manuals search engine

Ofrecido por www.electromanuales.com

(ctd.)
Tyre pressure in bar / psi[1)]

Saloon / Hatch		Tyre pressure for load of up to 3 people		Tyre pressure ECO[1)] loaded with up to 3 people		Tyre pressure for full load	
Engine [2)]	Tyres	Front	Rear	Front	Rear	Front	Rear
Z 18 XE, Z 18 XER	195/65 R 15, 205/55 R 16, 215/55 R 16, 215/50 R 17, 225/45 R 17, 225/45 R 18	2,0/29	2,2/32	2,4/35	38/2,6	2,4/35	2,9/42
Z 20 NET	205/55 R 16[3)]	2,4/35	2,4/35	–	–	2,5/36	3,0/44
	215/55 R 16, 215/50 R 17, 225/45 R 17, 225/45 R 18	2,3/33	2,3/33	2,6/38	2,6/38	2,4/35	2,9/42
Z 22 SE, Z 22 YH	195/65 R 15, 205/55 R 16	2,3/33	2,3/33	–	–	2,4/35	2,9/42
	215/55 R 16, 215/50 R 17, 225/45 R 17, 225/45 R 18	2,2/32	2,2/32	2,5/36	2,5/36	2,3/33	2,8/41
all	T 115/70 R 16[4)]	4,2/61	4,2/61	–	–	4,2/61	4,2/61

1) To reduce fuel consumption as much as possible.
2) Sales designation, see pages 284, 285.
3) Only permitted as winter tyres.
4) For notes on the temporary spare wheel – see page 237.

1) 1 bar corresponds to 100 kPa /14.5 psi.

Downloaded from www.Manualslib.com manuals search engine

Ofrecido por www.electromanuales.com

(ctd.)
Tyre pressure in bar / psi[1)]

Saloon / Hatch		Tyre pressure for load of up to 3 people		Tyre pressure for full load	
Engine[1)]	Tyres	Front	Rear	Front	Rear
Z 28 NEL, Z 28 NET	215/55 R 16[2)]	2,4/35	2,4/35	2,6/38	3,1/45
	215/50 R 17[2)], 225/45 R 17[2)], 225/45 R 18[2)]	2,6/38	2,4/35	2,8/41	2,3/33
	215/55 R 16[3)]	2,5/36	2,3/33	2,7/39	3,2/46
	215/50 R 17[3)], 225/45 R 17[3)], 225/45 R 18[3)]	2,7/39	2,4/35	2,9/42	3,4/49
Vectra VXR	235/35 R 19, 235/40 R 18	2,9/42	2,6/38	3,1/45	3,5/51
	225/45 R 17[4)]	2,8/41	2,5/36	3,0/44	3,5/51
all	T 115/70 R 16[5)]	4,2/61	4,2/61	4,2/61	4,2/61

[1)] 1 bar corresponds to 100 kPa /14.5 psi.

[2)] Sales designation – see pages 284, 285.
[3)] Version with manual transmission.
[4)] Version with automatic transmission.
[5)] Only permitted as winter tyres on Vauxhall-approved alloy wheels.
[6)] For notes on the temporary spare wheel, see page 237.

Downloaded from www.Manualslib.com manuals search engine

Ofrecido por www.electromanuales.com

(ctd.)

Tyre pressure in bar / psi[1)]

Saloon / Hatch		Tyre pressure for load of up to 3 people		Tyre pressure ECO[1)] loaded with up to 3 people		Tyre pressure for full load	
Engine[2)]	Tyres	Front	Rear	Front	Rear	Front	Rear
Z 19 DTL, Z 19 DTH	195/65 R 15, 205/55 R 16	2,4/35	2,4/35	–	–	2,5/36	3,0/44
	215/55 R 16, 215/50 R 17, 225/45 R 17, 225/45 R 18	2,3/33	2,3/33	2,6/38	2,6/38	2,4/35	2,9/42
Z 19 DT	195/65 R 15, 205/55 R 16	2,3/33	2,3/33	–	–	2,4/35	2,9/42
	215/55 R 16, 215/50 R 17, 225/45 R 17, 225/45 R 18	2,2/32	2,2/32	2,5/36	2,5/36	2,3/33	2,8/41
Z 30 DT	215/55 R 16,	2,5/36	2,3/33	–	–	2,7/39	3,2/46
	215/50 R 17, 225/45 R 18	2,6/38	2,4/35	–	–	2,7/39	3,2/46
	225/45 R 17	2,7/39	2,4/35	–	–	2,8/41	3,3/48
all	T 115/70 R 16[3)]	4,2/61	4,2/61	–	–	4,2/61	4,2/61

1) To reduce fuel consumption as much as possible.
2) Sales designation – see pages 284, 285.
3) For notes on the temporary spare wheel, see page 237.

1) 1 bar corresponds to 100 kPa /14.5 psi.

Downloaded from www.Manualslib.com manuals search engine

Ofrecido por www.electromanuales.com

(ctd.)
Tyre pressure in bar / psi[1)]

Estate		Tyre pressure for load of up to 3 people		Tyre pressure ECO[1)] loaded with up to 3 people		Tyre pressure for full load	
Engine[2)]	Tyres	Front	Rear	Front	Rear	Front	Rear
Z 18 XE, Z 18 XER	195/65 R 15, 205/55 R 16, 215/55 R 16, 215/50 R 17, 225/45 R 17, 225/45 R 18	2,0/29	2,2/32	2,4/35	2,6/38	2,4/35	2,9/42
Z 20 NET	205/55 R 16[3)]	2,4/35	2,4/35	–	–	2,5/36	3,0/44
	215/55 R 16, 215/50 R 17, 225/45 R 17, 225/45 R 18	2,3/33	2,3/33	2,6/38	2,6/38	2,4/35	2,9/42
Z 22 YH, Z 22 SE	195/65 R15[3)], 205/55 R 16	2,3/33	2,3/33	–	–	2,4/35	2,9/42
	215/55 R 16, 215/50 R 17, 225/45 R 17, 225/45 R 18	2,2/32	2,2/32	2,5/36	2,5/36	2,3/33	2,8/41
all	T 115/70 R 16[4)]	4,2/61	4,2/61	–	–	4,2/61	4,2/61

1) To reduce fuel consumption as much as possible.
2) Sales designation – see pages 284, 285.
3) Only permitted as winter tyres.
4) For notes on the temporary spare wheel – see page 237.

1) 1 bar corresponds to 100 kPa /14.5 psi.

Downloaded from www.Manualslib.com manuals search engine

Ofrecido por www.electromanuales.com

(ctd.)
Tyre pressure in bar / psi[1)]

Estate

Engine[1)]	Tyres	Tyre pressure for load of up to 3 people Front	Rear	Tyre pressure for full load Front	Rear
Z 28 NEL, Z 28 NET	215/55 R 16[2)]	2,5/36	2,3/33	2,7/39	3,2/46
	215/50 R 17[2)], 225/45 R 17[2)], 225/45 R 18[2)]	2,7/39	2,4/35	2,9/42	3,4/49
	215/55 R 16[3)]	2,6/38	2,4/35	2,8/41	3,3/48
	215/50 R 17[3)], 225/45 R 18[3)]	2,7/39	2,4/35	2,9/42	3,4/49
	225/45 R 17[3)]	2,8/41	2,5/36	3,0/44	3,5/51
Vectra VXR	235/35 R 19, 235/40 R 18	2,9/42	2,6/38	3,1/45	3,5/51
	225/45 R 17[4)]	2,8/41	2,5/36	3,0/44	3,5/51
all	T 115/70 R 16[5)]	4,2/61	4,2/61	4,2/61	4,2/61

1) Sales designation, see pages 284, 285.
2) Version with manual transmission.
3) Version with automatic transmission.
4) Only permitted as winter tyres on Vauxhall-approved alloy wheels.
5) For notes on the temporary spare wheel – see page 237.

1) 1 bar corresponds to 100 kPa /14.5 psi.

Downloaded from www.Manualslib.com manuals search engine

Ofrecido por www.electromanuales.com

(ctd.)
Tyre pressure in bar / psi[1)]

Estate		Tyre pressure for load of up to 3 people		Tyre pressure ECO[1)] loaded with up to 3 people		Tyre pressure for full load	
Engine[2)]	Tyres	Front	Front	Rear	Rear	Front	Rear
Z 19 DTL, Z 19 DTH	195/65 R 15, 205/55 R 16	2,4/35	2,4/35	–	–	2,5/36	3,0/44
	215/55 R 16, 215/50 R 17, 225/45 R 17, 225/45 R 18	2,3/33	2,3/33	2,6/38	2,6/38	2,4/35	2,9/42
Z 19 DT	195/65 R 15, 205/55 R 16	2,3/33	2,3/33	–	–	2,4/35	2,9/42
	215/55 R 16, 215/50 R 17, 225/45 R 17, 225/45 R 18	2,2/32	2,2/32	2,5/36	2,5/36	2,3/33	2,8/41
Z 30 DT	215/55 R 16	2,5/36	2,3/33	–	–	2,7/39	3,2/46
	215/50 R 17, 225/45 R 18	2,6/38	2,4/35	–	–	2,7/39	3,2/46
	225/45 R 17	2,7/39	2,4/35	–	–	2,8/41	3,3/45
all	T 115/70 R 16[3)]	4,2/61	4,2/61	4,2/61	4,2/61	4,2/61	4,2/61

1) To reduce fuel consumption as much as possible.
2) Sales designation – see pages 284, 285.
3) For notes on the temporary spare wheel, see page 237.

1) 1 bar corresponds to 100 kPa /14.5 psi.

Downloaded from www.Manualslib.com manuals search engine

Ofrecido por www.electromanuales.com

(ctd.)

Tyre pressure in bar / psi[1)]

Saloon / Hatch / Estate with 19-inch wheels		Tyre pressure for load of up to 3 people		Tyre pressure for full load	
Engine[1)]	Tyres	Front	Rear	Front	Rear
Z 18 XE, Z 18 XER, Z 22 SE, Z 22 YH	235/35 R 19	2,7/39	2,4/35	2,8/41	3,3/48
	215/55 R 16[2)], 225/45 R 17[2)], 205/50 R 17[2)]	2,3/33	2,3/33	2,5/36	3,0/44
Z 20 NET, Z 19 DTL, Z 19 DTH	235/35 R 19	2,7/39	2,4/35	2,8/41	3,3/48
	215/55 R 16[2)], 225/45 R 17[2)]	2,3/33	2,3/33	2,5/36	3,0/44
	205/50 R 17[2)]	2,7/39	2,4/35	2,8/41	3,3/48
Z 28 NEL, Z 28 NET	235/35 R 19	2,9/42	2,6/38	3,1/45	3,5/51
	215/55 R 16[2)], 225/45 R 17[2)]	2,8/41	2,5/36	3,0/44	3,5/51
	205/50 R 17[2)]	2,9/42	2,6/38	3,1/45	3,5/51
Z 30 DT	235/35 R 19	2,9/42	2,6/38	3,1/45	3,5/51
	215/55 R 16[2)], 225/45 R 17[2)]	2,7/39	2,5/36	2,9/42	3,4/49
	205/50 R 17[2)]	2,9/42	2,6/38	3,1/45	3,5/51
all	T 115/70 R 16[3)]	4,2/61	4,2/61	4,2/61	4,2/61

[1)] Sales designation, see pages 284, 285.
[2)] Only permitted as winter tyres.
[3)] For notes on the temporary spare wheel, see page 237.

[1)] 1 bar corresponds to 100 kPa /14.5 psi.

Downloaded from www.Manualslib.com manuals search engine

Ofrecido por www.electromanuales.com

Electrical system

Battery	Voltage	12 Volt
	Amp hours	55 Ah / 66 Ah ✻ / 70 Ah ✻ / 72 Ah ✻ / 85 Ah ✻
Battery for radio remote control of central locking system		CR 20 32
Battery for remote control of auxiliary heater/ventilation		AAA LR 06

Downloaded from www.Manualslib.com manuals search engine

Ofrecido por www.electromanuales.com

Capacities

(approx. litre)

Engine[1]	Z 18 XE	Z 18 XER	Z 20 NET	Z 22 SE	Z 22 YH	Z 28 NEL, Z 28 NET
Fuel tank (nominal capacity)						
Saloon / hatch	61	61	61	61	61	61
estate	60	60	60	60	60	60
Engine oil with filter change	4.25	4.5	6.0	4.75	5.0	6.0
between MIN and MAX on dipstick	1.0	1.0	1.0	0.75	1.0	1.0
Wash fluid reservoir for windscreen wash system	2.9	2.9	2.9	2.9	2.9	2.9
with headlight wash system	5.6	5.6	5.6	5.6	5.6	5.6

[1] Sales designation – see pages 284, 285.

Downloaded from www.Manualslib.com manuals search engine

Ofrecido por www.electromanuales.com

Capacities

(approx. litre)

Engine[1]	Z 19 DTL	Z 19 DT	Z 19 DTH	Z 30 DT
Fuel tank (nominal capacity)				
Saloon / hatch	61	61	61	61
estate	60	60	60	60
Engine oil with filter change	4,3	4,3	4,3	7,5
between MIN and MAX on dipstick	0,7	0,7	0,7	1,0
Wash fluid reservoir for windscreen wash system	2.9	2.9	2.9	2.9
with headlight wash system	5.6	5.6	5.6	5.6

[1] Sales designation – see pages 284, 285.

Downloaded from www.Manualslib.com manuals search engine

Ofrecido por www.electromanuales.com

Dimensions

(approx. mm)

	Saloon / Hatch	Estate	Saloon VXR	Estate VXR
Overall length	4611	4839	4642	4870
Overall width	1798	1798	1798	1798
Width with two exterior mirrors	2036	2036	2036	2036
Overall height	1460	1500	1460	1500
Length of luggage compartment floor	1047	1176	1047	1176
Luggage compartment width				
maximum	1396	1079	1396	1079
between the wheel arches	972	1060	972	1060
Height of luggage compartment opening	614[1)]	767	614	767
Wheelbase	2700	2830	2700	2830
Turning circle diameter[2)]	11.50	11.50	11.50	11.50

1) 4-door saloon 324 mm.
2) In metres.

Downloaded from www.Manualslib.com manuals search engine

Ofrecido por www.electromanuales.com

Installation dimensions of trailer towing equipment with removable coupling ball bar ✻, Saloon / hatch

All dimensions refer to factory-fitted towing equipment.

Dimension	mm
A	334
B	1061
C	492.5
D	486.5
E	218
F	495
G	492.5
H	201

⚠Warning

Only use towing equipment approved for your vehicle. We recommend entrusting retrofitting of towing equipment to your Vauxhall Authorised Repairer.

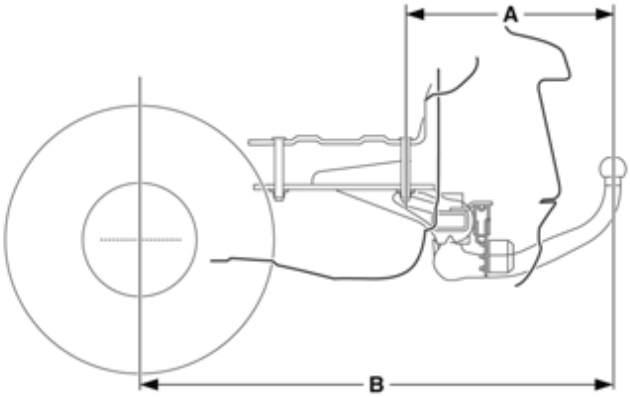

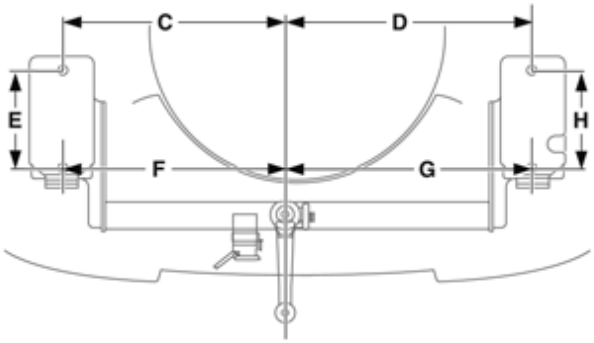

17790 J

Downloaded from www.Manualslib.com manuals search engine

Ofrecido por www.electromanuales.com

Installation dimensions of trailer towing equipment with pivoting coupling ball bar ✻, Estate

All dimensions refer to factory-fitted towing equipment.

Dimension	mm
A	396.5
B	157.5
C	386
D	74
E	630
F	590
G	491
H	486
I	480
J	379.5

⚠Warning

Only use towing equipment approved for your vehicle. We recommend entrusting retrofitting of towing equipment to your Vauxhall Authorised Repairer.

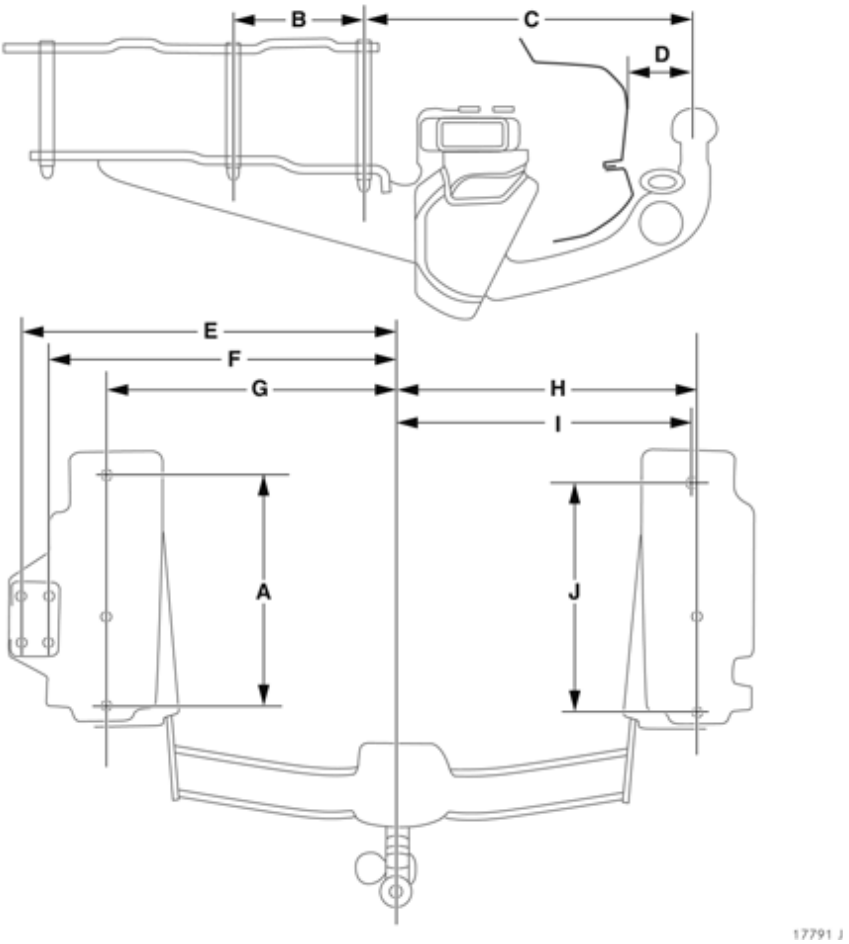

Downloaded from www.Manualslib.com manuals search engine

Ofrecido por www.electromanuales.com

Downloaded from www.Manualslib.com manuals search engine

Ofrecido por www.electromanuales.com

Index

A

ABS (Anti-lock Brake System) 212
Accessories 124, 127, 234
Accessory socket 89, 101
Adaptive brake light 210
Adaptive Forward Lighting 131
  Bulb replacement 257
  Driving abroad 135
Adaptive Forward Lighting (AFL)
  Bulb replacement 257
  Driving abroad 135
Air conditioning system 142
Air intake 168
Air outlet 168
Air quality sensor 159
Air recirculation system 150, 155, 163
Air vents 144
Airbags 112
Alarm 76
Alarm system 74
Alternator 35
Antenna 59
Anti-corrosion service 267
Antifreeze 270
Antifreeze protection 270, 275
Anti-knock quality of fuel 190
  Octane number 284, 285
Anti-theft locking system 66
Anti-theft protection 22
Aquaplaning 218
Armrest 84
Ashtray 102, 134
Automatic air recirculation mode 163
Automatic anti-dazzle interior mirror .. 126
Automatic transmission 20, 178
  Automatic mode 179
  Driving programme 181
  Fault 184
  Interruption of power supply 185
  Kickdown 182
  Manual mode 180
  Selector lever 20, 179, 180
  Selector lever lock 179
  Winter programme 182
Automatic wiping 17
Auxiliary heating 165
  Programming 166
  Remote control 167

B

Battery 187, 276, 307
  Interruption of
  power supply 138, 177, 185
Battery discharge protection 134
Before starting off 21, 22, 23, 24
Belt tensioners 107
Bleeding, diesel fuel system 229
Board information display 42
Bonnet 80
Boot, see Luggage compartment 70, 94
Brake assist 210
Brake light 210
Brake system 35
Brakes 210
  ABS 212
  Brake assist 210
  Brake fluid 272
  Brake lights 258
  Brake servo unit 186
  Foot brake 210, 211
  Hand brake 211
Bulb replacement 252
Bulbs 127, 252

C

Capacities 308
Car Pass 2
Caravan/trailer towing 186, 220
Care 278
Catalytic converter 193, 197, 229
CDC (Continuous Damping Control) ... 200
Central locking system 66
Centre console lighting 134
Changing the battery
  Radio remote control 65, 167, 307
Changing tyre/wheel type 214
Changing wheels 238
Chassis number, see vehicle identification
  number 283
Check control 28, 58
Child restraint system 124, 127
Child safety locks 77, 137
Cigarette lighter 101, 134
Climate control 142
Clutch operation 187
CO2 emissions 287
Code numbers 2

Downloaded from www.Manualslib.com manuals search engine

Ofrecido por www.electromanuales.com

Cold start 187
Colour information display 42
Continuous Damping Control 200
Continuous Damping Control (CDC) 200
Contrast 53
Control indicator
ABS (Anti-lock Brake System) 213
Airbag 117
Engine electronics 196
ESP (Electronic Stability Program) 198
Exhaust 195
Immobiliser 63
Parking distance sensor 131, 205
Tyre pressure monitoring system 209
Control indicators 10, 34
Adaptive Forward Lighting 38, 131
Belt tensioners 108
Brake system 212
Cruise control 202
IDS+ 201
Cool box 90
Coolant 270
Coolant level 271
Coolant temperature display 41
Coolant thermometer 41
Cooled glove compartment 146
Cooling 151, 156
Correcting time 46, 52
Coupling socket load 226
Courtesy light 133
Courtesy lights
Bulb replacement 262
Cruise control 202
Curtain airbags 116
Curve lighting 32, 131

D

Dashboard, see Instrument panel 8
Data 62, 282
Date 44, 47
Daytime running lights 128
Decommissioning 277
Demisting and defrosting
Windows 149
With climate control system 161
With air conditioning system 152, 157
Diesel fuel filter 270
Diesel fuel system 229, 270
Diesel particle filter 37, 145, 187, 197
Dimensions 310
Dipped beam 14, 128
Bulb replacement 253, 255
Display 39, 42, 179
Display mode 54
Door locks 62, 281
Doors 36
Door-to-door illumination 132
Drink holders 105
Driver's seat with climate control 146
Driving abroad 190, 264, 265
Headlights 135
Toll system 61
Driving hints 186

E

Easytronic 19, 170
Driving programmes 173
Fault 176
Interruption of power supply 177
Kickdown 174
Selector lever 19
Starting off 172
Winter programme 174
Economical driving 186, 188
Electric seat adjustment 84
Electric sun roof 139
Electric windows 136
Electrical system 246, 276, 307
Electro-hydraulic
power assisted steering 11, 37, 186
Electro-hydraulic power-assisted steering
fluid 283
Electronic components 276
Electronic immobiliser 63
Electronic Stability Program 198
Engine code 283, 284, 285
Engine control indicator 196
Engine oil 268
Engine oil change 269
Engine oil consumption 268
Engine oil filter 269
Engine oil level 38, 268
Engine oil pressure 34
Engine speed 187
Engine wash 281
Environmental protection 269, 278
ESP (Electronic Stability Program) 198

Downloaded from www.Manualslib.com manuals search engine

Ofrecido por www.electromanuales.com

Exhaust control indicator 195
Exhaust gases 196
Exhaust system 196
Exterior mirrors 6, 126, 145

F

Fan 147, 154, 267
Filling station
  Capacities 308, 309
  Engine oil level 268
  Fuel 190, 284, 285
  Ignition key 2
  Opening the bonnet 80
  Tyre pressure 189, 299
  Vehicle data 283
  Windscreen wash system 275
First-aid kit, ...127, 234
Flat tyre 242
FlexOrganizer 98
Fog lights 130
  Bulb replacement 258
Fog tail light 130
  Bulb replacement 258
Foot brake 210, 211
Front passenger airbag 112
Fuel 190, 191, 284, 285
Fuel consumption 188, 190, 287
Fuel filter 270
Fuel gauge 41
Fuel level 41
Fuel system, diesel 229
Fuses 246

G

Generator, see Alternator 35
Genuine Vauxhall
  Parts and Accessories 24
Glove compartment 103
Glove compartment lighting 134
  Bulb replacement 263
Graphical information display 42
Gross vehicle weight 293
Gross vehicle weight rating 293

H

Halogen headlight system 253
  Bulb replacement 253
  Driving abroad 135
Hand brake 21, 22, 211
Hazard warning lights 16
Head restraints 6, 27, 82, 127
Headlamp wash system 17
Headlight flash 15
Headlight range adjustment 129, 252
Headlight switch 14, 128, 129
Headlight wash system 275
Headlights 14
  Daytime running lights 128
  Driving abroad 135
  Fog lights 130
  Reversing lights 130
  Warning device 22
Heated exterior mirrors 18, 145
Heated front seats 145
Heated rear seats 145
Heated rear window 18, 145
Heating 142, 148, 156
  Seats 145
  With climate control system 160
  With air conditioning system 152, 157
Height adjustment
  seat belts 109
  Steering wheel 14
High-pressure cleaners 223, 280, 281
Horn 16

I

Identification plate 282
IDS+ (Interactive Driving System) . 198, 200
Ignition logic 47, 54
Ignition switch 7
Ignition system 267, 276
Immobiliser 63
Information display 42
Infotainment system 60
Inspection system 266
Instrument display 40
Instrument illumination 133
  Bulb replacement 263
Instrument panel 8
Instruments 34, 40
Interactive Driving System (IDS+) . 198, 200
Interior mirror 6
  Universal remote control 77
Interruption of power supply 56, 59, 138
  Easytronic 177
  Electric windows 138
  Selector lever lock 185
ISOFIX 123

Downloaded from www.Manualslib.com manuals search engine

Ofrecido por www.electromanuales.com

J

Jack 238
Jump leads 230

K

Key
  extending 62
  ignition lock 7, 21, 63
  Locking doors 66
  Remove 22
  Starting the engine 7, 21, 63
Key numbers 2
Keys 62

L

Language selection 47, 52
Lashing eyes 98
Leather trim 280
Level control system 206
Light switch 14
Lighting 14, 35, 128
  Driving abroad 135
Loading 225
Locking doors 2, 66
Locking from the inside 67
Locks 281
Lubricants 268, 283
Luggage compartment
  Bulb replacement 263
  Extension 94
  FlexOrganizer 98
  Lashing eyes 98
  Lighting 134
  Loading 225, 293
  Locking 70
  Safety net 96
Luggage compartment cover 95
Lumbar support 4, 85

M

Main beam 14, 128
  Bulb replacement 254, 256
  Control indicator 36
Maintenance 24, 266
  Air conditioning system 169
  Antifreeze protection 270
  Brake fluid 272
  Brakes 210
  Catalytic converter 197
  Engine oil 268, 269
  Fuel consumption 189
  Tyre pressure 215
  Tyres 217
  Windscreen wiper 273
Manual transmission 19
Mirrors 6, 126
Misted windows 18, 149, 161
Mobile telephone 61
Motorway lighting 32, 131
Muffler, see Exhaust system 196

N

Number plate lighting 261
Number plate lights
  Bulb replacement 261
Number plates 277

O

Octane numbers 190, 284, 285
Odometer 40
Oil change 269
Oil consumption 268
Oil filter change 269
Oil level 268
Oil pressure 34
Oils 268
Operating temperature 187
Outside temperature gauge 43
Overrun 187, 189

P

Paintwork damage 280
Parking 22, 204
Parking distance sensor 204
Parking lights 14, 132
  Bulb replacement 257
Parking the vehicle 22
Parts 24, 127
Pedals 187
Performance 287
Petrol 190, 284, 285
Pinking 190
Pollen filter 168
Position memory 6, 85, 86

Downloaded from www.Manualslib.com manuals search engine

Ofrecido por www.electromanuales.com

Power assisted steering, see electro-hydraulic power assisted steering 186
Preheating 37
Pushing, towing 229

Q

Quickheat 148, 156

R

Radio 59
Radio equipment (CB) 61
Radio reception 59
Radio remote control
  Auxiliary heating 167
  Central locking system 64
  Universal remote control 77
Rain sensor 17, 138, 140, 273, 279
Reading lights 133, 134
Rear light cluster 128
  Bulb replacement 258
Rear window wash system 17, 275, 279
Refuelling 191
Remote control
  Auxiliary heating 167
  Central locking system 64
  Steering wheel 29, 60
  Universal remote control 77
Replacement keys 62
Reversible carpet 98
Reversing lights
  Bulb replacement 258
Roof load 100, 186, 189
Roof rack 189, 220
Roof racks 189, 220
Running-in 186
  Brakes 210

S

Safeguard against
  unauthorised use 2, 7, 23
Safety 106
Safety accessories 124, 234
Safety net 96
Safety systems 106
Saving energy 188
Seat adjustment 3, 84
Seat belts 106, 109, 280
Seat height adjustment 4
Seat occupancy recognition 118
Seat position 81
Seats 3, 4
  Extending the luggage compartment 94
  heated 145
  With climate control 146
Selector lever 171, 179
Selector lever lock 20, 179
  Interruption of power supply 185
Self-diagnosis 108, 117, 213
Self-help 229
  Automatic transmission 185
  Central locking system 69
  Electric sun roof 141
  Electric windows 138
  Information display 44
  Radio remote control 65
Service Booklet 24
Service interval display 266
Service work 24, 266
Side airbags 114
Signal system 15
Spare keys 62
Spare wheel 236, 238
Speed 188, 189
  Fuel consumption 188, 189
Speedometer 40
Sport mode 36, 200
Starter switch 7, 21, 63
Starting the engine 7, 21, 63, 171, 229
  Self-help 229
Steam-jet cleaners 223, 280, 281
Steering column lock 7, 22
Steering wheel adjustment 14
Steering wheel remote control 29, 60
Stowage compartments 83, 103, 104
Sun blind 141
Sun roof 139
Sun shade 140, 141
System settings 46, 51

T

Tables 30, 91
Tachometer 40
Tail lights 128
  Bulb replacement 258
Tailgate 70
Tank
  Fuel gauge 41
Technical data 282
Telephone, see Mobile telephone 61
Temperature regulation 147, 160
Tempomat, see cruise control 202
Temporary spare wheel 219, 237

Downloaded from www.Manualslib.com manuals search engine

Ofrecido por www.electromanuales.com

The first 600 miles / 1000 km 186
Thigh support 5, 85
Tightening torque 242, 299
Time 44, 47
Toll systems 61
Tools 238
Towing 232
Towing equipment 221
Towing eye 232, 233
Trailer Stability Assist (TSA) 226
Transmission display 170
Transmission, automatic 20, 178
  Automatic mode 179
  Driving programme 181
  Fault 184
  Interruption of power supply 185
  Kickdown 182
  Selector lever 179, 180
  Selector lever lock 179
  Winter programme 182
Transmission, Easytronic 170
  Driving programmes 173
  fault 176
  Interruption of power supply 177
  Kickdown 174
  Selector lever 19, 172
  Winter programme 174
Transmission, manual 19
Travel Assistant 30, 87
Tread depth 217
Trip computer 28, 48, 54
Trip odometer 40
Triple information display 42
TSA (Trailer Stability Assist) 226
Turn lighting 32, 131
Turn signal lights 15
Turn signals
  Bulb replacement 258
Twin Audio 29, 60
Tyre chains 219, 299
Tyre condition 217
Tyre pressure 206, 215, 299
Tyre pressure monitoring system 206
Tyre repair kit 242

U

Units of measure 47, 53
Unleaded fuel 190, 193, 284, 285
Used oil 269

V

Valve cap key 215
Vauxhall alarm system 74
Vauxhall Service 24, 264
Vehicle care 278
Vehicle decommissioning 277
Vehicle identification number 283
Vehicle keys, see Keys 62
Vehicle recommissioning 277
Ventilation 142, 148, 155, 162

W

Warning buzzers 22
Warning messages 45, 50, 51
Warning triangle, ... 127
Wash fluid reservoir,
  windscreen wash system 275
Wheels 214
Wheels, tyres 214
Windows
  Demisting and defrosting .. 18, 149, 152, 157, ... 161
Windscreen wash system 17
  Antifreeze protection 275
  Wash fluid reservoir 275
Windscreen washer system
  Capacities 308, 309
Windscreen wiper 16, 273
Winter mode
  Starting-off aid 174
Winter operation
  Battery 187
  Coolant, antifreeze 270
  Fuel consumption 189
  Fuel for diesel engines 191
  Heating 142, 152, 157
  Locks 281
  Tyre chains 219, 299
  Window demisting and defrosting ... 149
  Windscreen wash system, antifreeze protection 275
Winter programme 174
Winter tyres 219, 299

X

Xenon headlight system 255
  Bulb replacement 255
  Driving abroad 135

Downloaded from www.Manualslib.com manuals search engine

Ofrecido por www.electromanuales.com

Downloaded from www.Manualslib.com manuals search engine