4005Z-06

ADJUSTMENT

1. INSPECT PARK/NEUTRAL POSITION SWITCH ASSY

(a) Apply the parking brake and turn the ignition switch to ON.

(b) Depress the brake pedal and check that the engine starts only when the shift lever is set in N or P position.

(c) Check that the back-up light is on and the reverse warning buzzer sounds only when the shift lever is set in R position.

If a failure is found, check the park/neutral position switch for continuity.

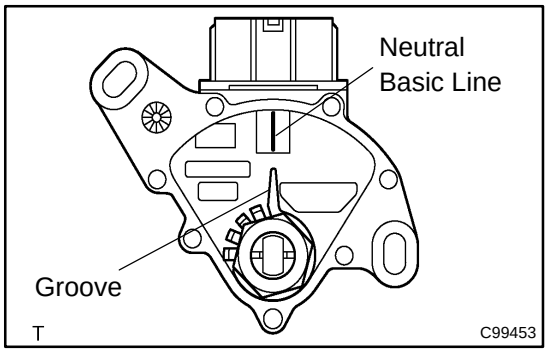

2. ADJUST PARK/NEUTRAL POSITION SWITCH ASSY

(a) Loosen the 2 bolts of park/neutral position switch and set the shift lever to the N position.

(b) Align the groove and neutral basic line.

(c) Hold the switch in position and tighten the 2 bolts.
Torque: 5.4 N·m (55 kgf·cm, 48 in.·lbf)

(d) After adjustment, perform the inspection described in step 1.

400H6-02

ADJUSTMENT

1. INSPECT SHIFT LEVER POSITION

(a) When shifting from P to R position only with ignition switch ON and brake pedal, make sure that the shifting lever moves smoothly and can be moderately operated.

(b) When starting engine, make sure that the vehicle moves forward when shifting from N to D position and moves rearward when shifting to R position.

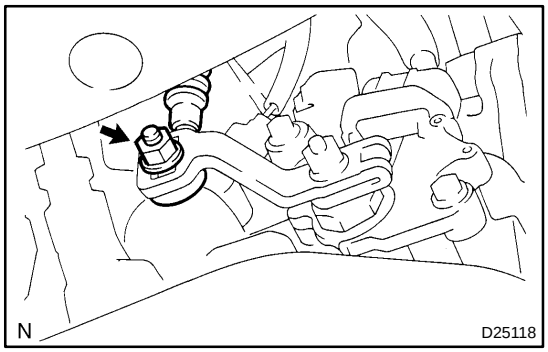

2. ADJUST SHIFT LEVER POSITION

(a) Loosen the nut on the control shaft lever.

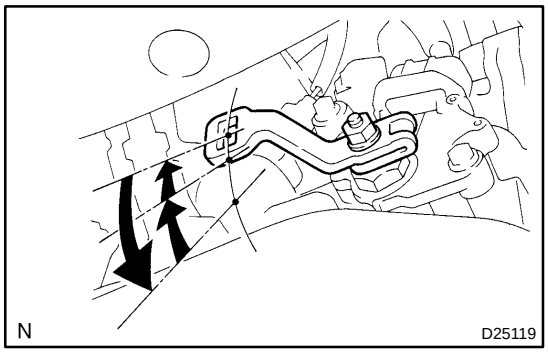

(b) Return the control shaft lever 2 notches to N position.

(c) Set the shift lever to N position.

(d) Press the shift cable end toward the inner side of the cable by less than 10 N force and then release it before tighten the nut firmly by regular torque.
Torque: 13 N·m (132.6 kgf·cm, 9.5 ft·lbf)

(e) Start the engine and make sure that the vehicle moves forward when shifting the lever from N to D position and moves rearward when shifting it to R position.

SHIFT LEVER ASSY

4011B-02

COMPONENTS

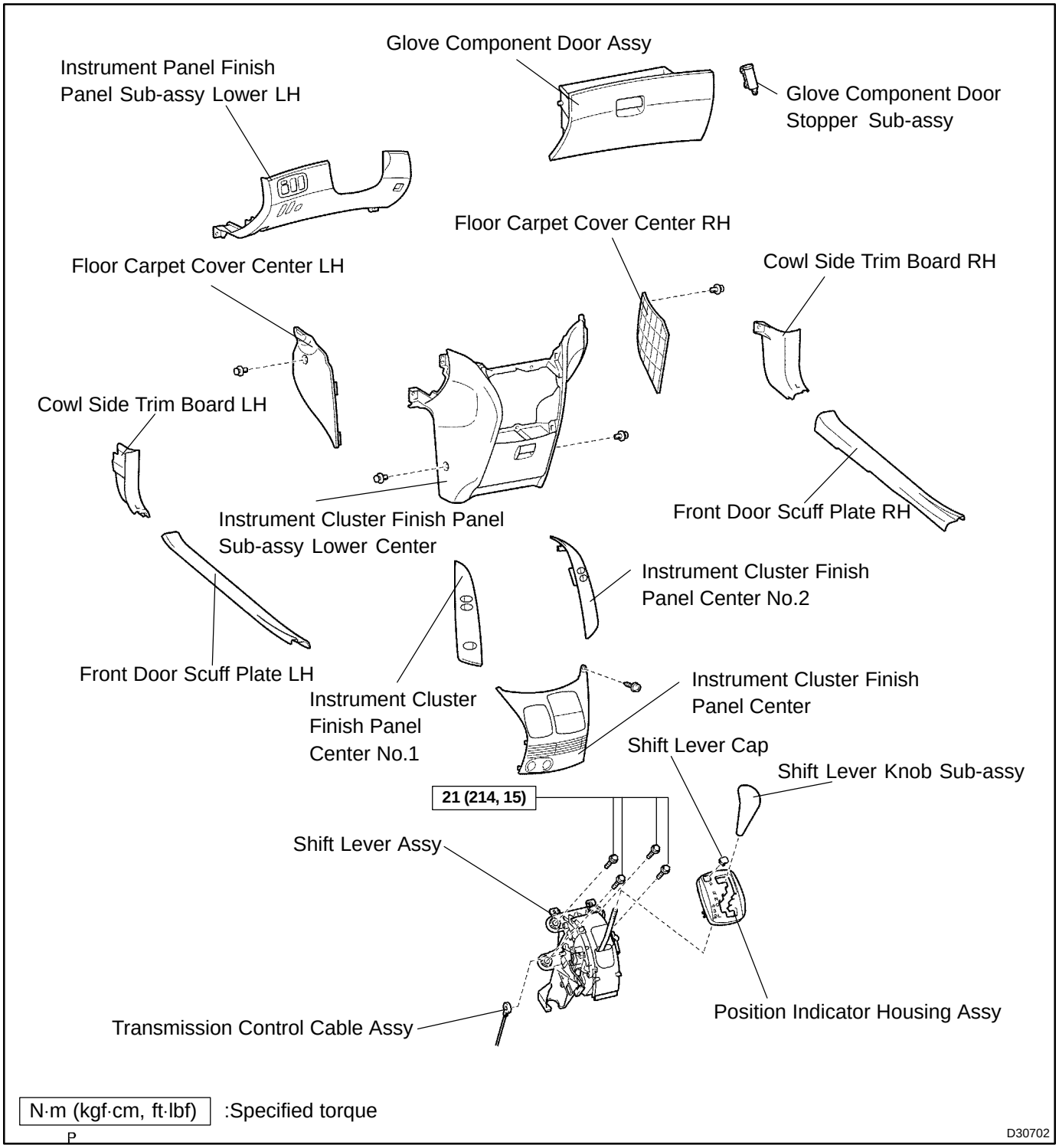

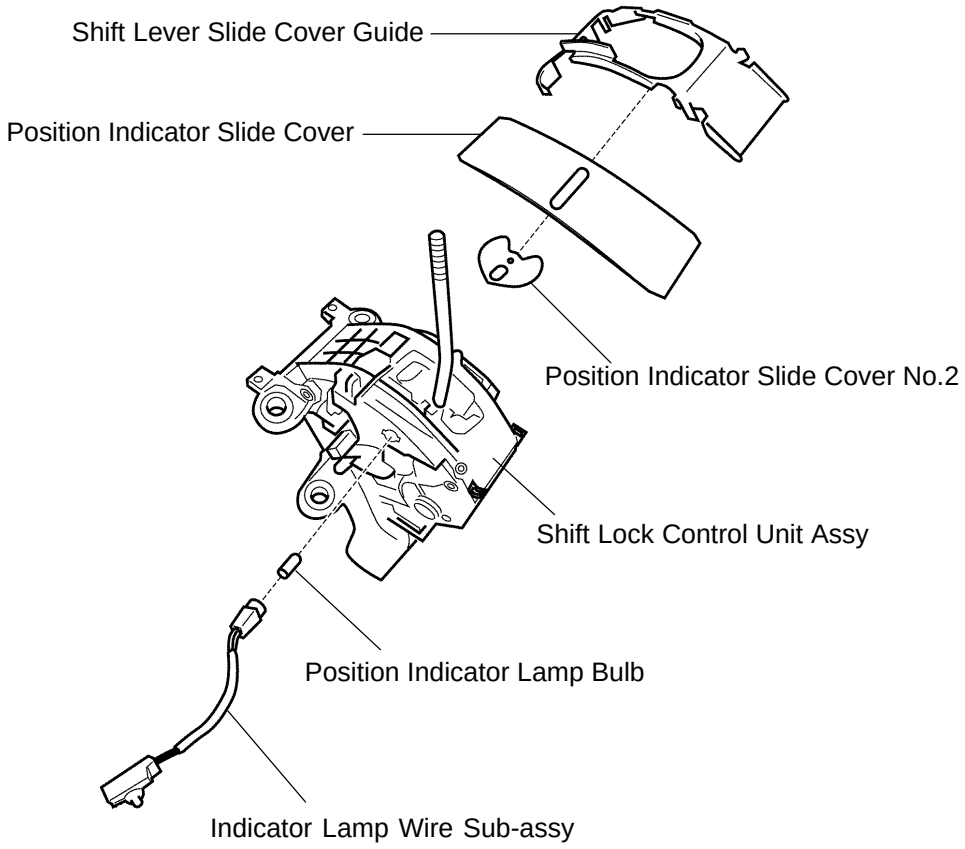
Shift Lever Slide Cover Guide
Position Indicator Slide Cover
Position Indicator Slide Cover No.2
Shift Lock Control Unit Assy
Position Indicator Lamp Bulb
Indicator Lamp Wire Sub-assy

C86301

AUTOMATIC TRANSAXLE ASSY (U151E/U151F)

COMPONENTS

4011G-01

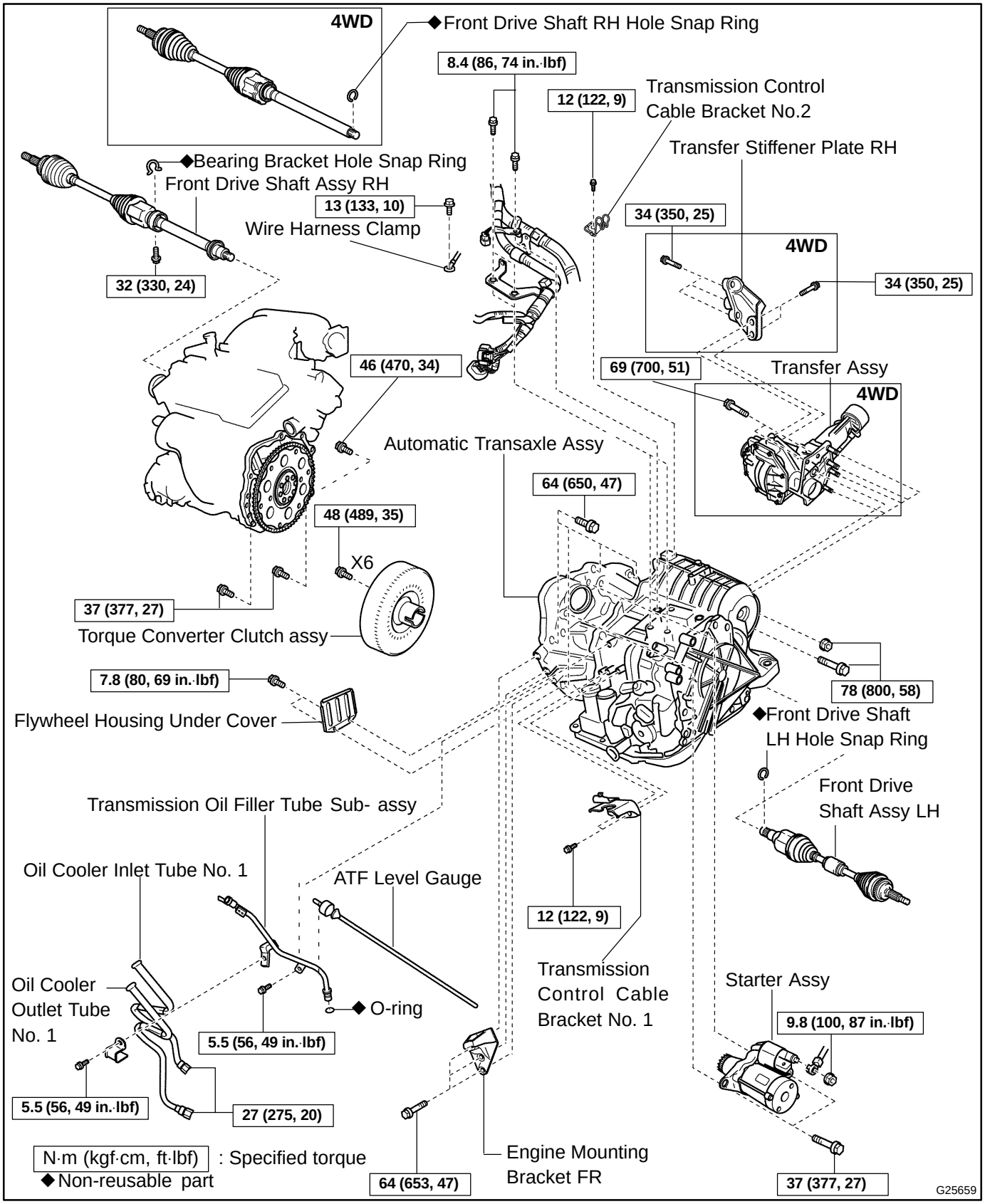

TORQUE CONVERTER CLUTCH AND DRIVE PLATE (ATM)

40063-18

INSPECTION

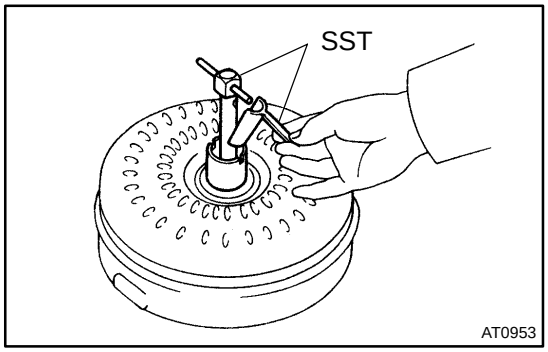

1. INSPECT TORQUE CONVERTER CLUTCH ASSY

(a) Inspect the one-way clutch.

(1) Set SST into the inner race of the one-way clutch.

SST 09350-32014 (09351-32010)

(2) Install SST so that it fits in the notch of the converter hub and outer race of the one-way clutch.

SST 09350-32014 (09351-32020)

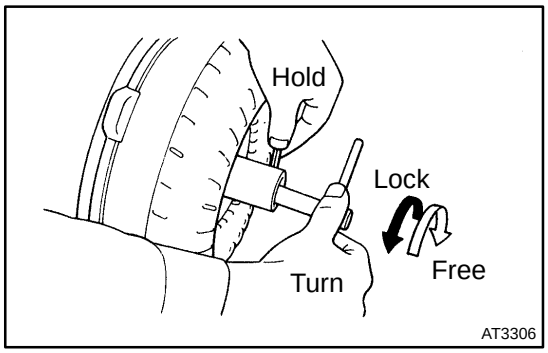

(3) Check that the one-way clutch locks when it is turned counterclockwise, and rotates smoothly clockwise.

Clean the torque converter clutch and retest the one-way clutch as necessary.

Replace the torque converter clutch if the one-way clutch still fails the test.

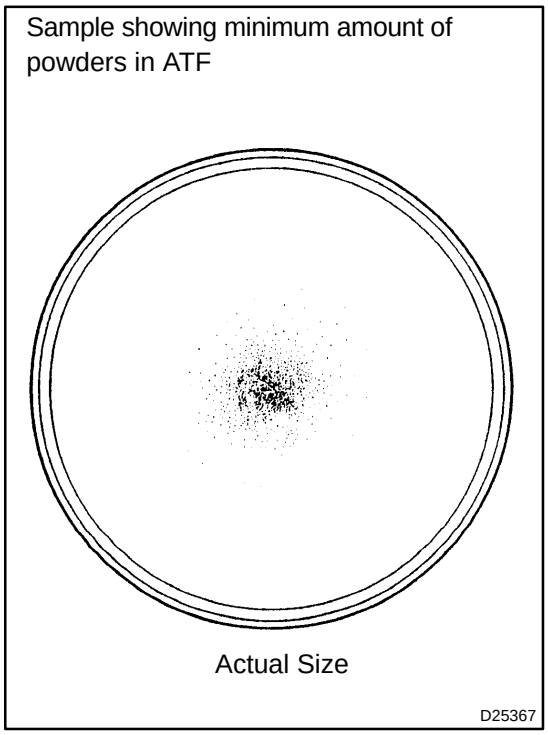

(b) Determine the condition of the torque converter clutch assy.

(1) If the inspection result of the torque converter clutch assy meets the following conditions replace the torque converter clutch.

Malfunction item:

- **Any metallic sound is heard from the torque converter clutch during stall test or when the shift lever is in neutral position.**
- **One-way clutch is free or locked in both directions. Fine powders exceeding the sample limit is identified in ATF. (See the sample.)**

HINT:

The sample shows the auto fluid of approx. 0.25 liters (0.26 US qts, 0.22 Imp. qts) that is taken out from the removed torque converter clutch.

(c) Replace the ATF in the torque converter clutch.

(1) If the ATF is discolored and/or has a foul odor, stir the ATF in the torque converter clutch completely and drain it with the face for installation facing up.

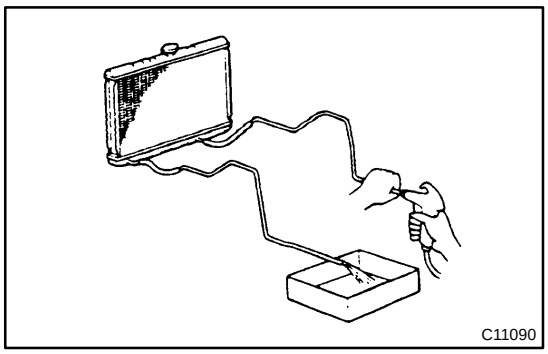

(d) Clean and check the oil cooler and oil pipe line.
  (1) If the torque converter clutch is inspected or the ATF is exchanged, clean the oil cooler and oil pipe line.

HINT:
- Spray compressed air of 196 kPa (2 kgf/cm^2, 28 psi) from the inlet hose.
- If plenty of fine powders are identified in the ATF, add new ATF using a bucket pump and clean it again.
  (2) If the ATF is cloudy, inspect the oil cooler (radiator).

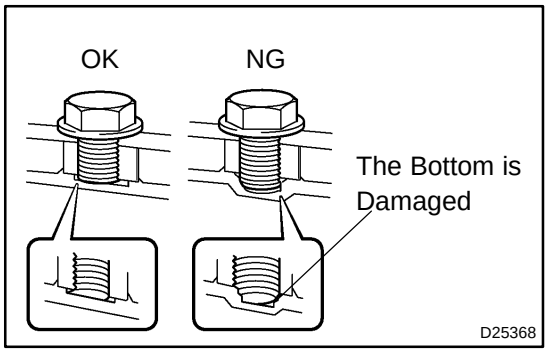

(e) Prevent deformation of the torque converter clutch and damage to the oil pump gear.
  (1) When any marks due to interference are found at the end of the bolt for the torque converter clutch and at the bottom of the bolt hole, replace the bolt and the torque converter clutch.
  (2) All of the bolts must be the same length.
  (3) Do not lose the spring washer.

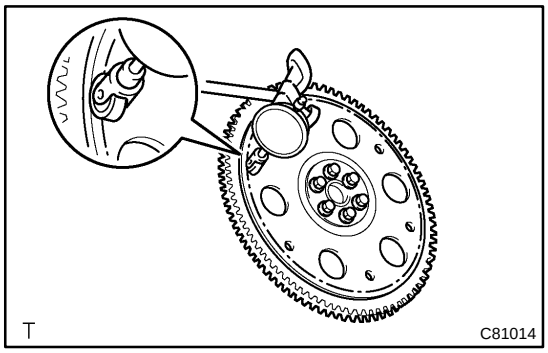

2. INSPECT DRIVE PLATE & RING GEAR SUB-ASSY

(a) Set up a dial indicator and measure the drive plate runout.

(b) Check the damage of the ring gear.
  Maximum runout: 0.20 mm (0.0079 in.)

If the runout is not within the specification or ring gear is damaged, replace the drive plate.

KEY INTER LOCK SOLENOID

INSPECTION

4005S-04

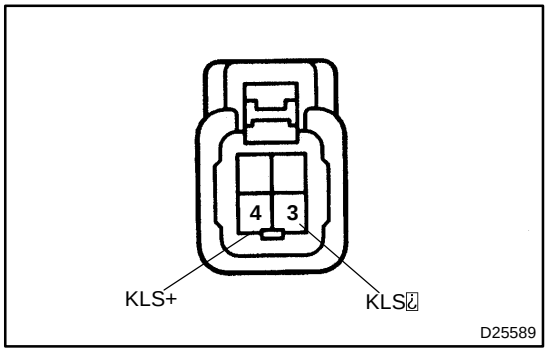

1. INSPECT SOLENOID, KEY INTER LOCK

(a) Disconnect the solenoid connector.

(b) Connect KLS+ (4) terminal to the batteries' positive (+) terminal, and KLS- (3) terminal to the battery negative (-) terminal, and apply about 12V between KLS+ - KLS- terminals.

(c) Check that operation noise can be heard from the solenoid.

If the solenoid does not operate, replace the solenoid.

SHIFT LOCK SOLENOID

4011C-01

INSPECTION

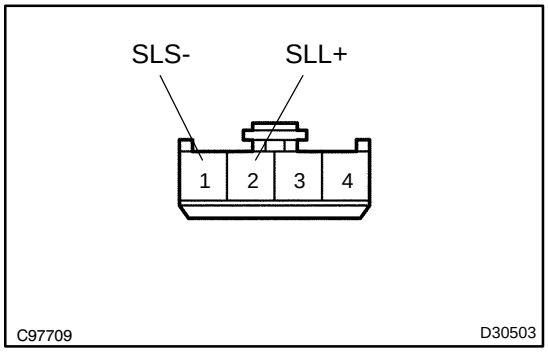

1. INSPECT SHIFT LOCK SOLENOID

(a) Disconnect the solenoid connector.

(b) Connect SLL+ (2) terminal to the batteries' positive (+) terminal, and SLS- (1) terminal to the battery negative (-) terminal, and apply about 12 V between SLL+ - SLS- termianls.

(c) Check that operation noise can be heard from the solenoid.

If the solenoid does not operate, replace the solenoid.

AUTOMATIC TRANSAXLE FLUID (ATM)

4005R-05

ON-VEHICLE INSPECTION

1. CHECK THE FLUID LEVEL

HINT:

Drive the vehicle so that the engine and transaxle are at normal operating temperature.

Fluid temperature: 70 - 80 ˚C (158 - 176 ˚F)

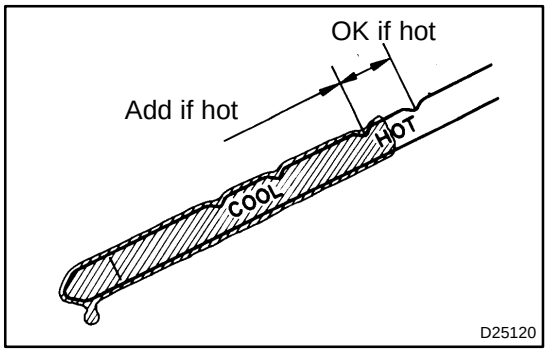

(a) Park the vehicle on a level surface and set the parking brake.

(b) With the engine idling and the brake pedal depressed, shift the shift lever into all positions from P to L position, and return to P position.

(c) Take out the oil level gage and wipe it clean.

(d) Put it back fully into the pipe.

(e) Take it out and check that the fluid level is in the HOT position.

If there are leaks, it is necessary to repair or replace O-rings, FIPGs, oil seals, plugs and/or other parts.

SHIFT LOCK SYSTEM

40067-05

ON-VEHICLE INSPECTION

1. CHECK SHIFT LOCK OPERATION

(a) Shift the shift lever to P position.
(b) Turn the ignition switch to LOCK.
(c) Check that the shift lever cannot be shifted to any other positions other than P.
(d) Turn the ignition switch ON, depress the brake pedal and check that the shift lever can be shifted to any other positions.

2. CHECK SHIFT LOCK RELEASE BUTTON OPERATION

(a) Using a small screwdriver, remove the shift lock release cover.
(b) When operating the shift lever with the shift lock release button pressed, check that the lever can be shifted to any position other than P.

3. CHECK KEY INTERLOCK OPERATION

(a) Turn the ignition switch to ON.
(b) Depress the brake pedal and shift the shift lever to any other position other than P.
(c) Check that the ignition key cannot be turned to LOCK.
(d) Shift the shift lever to P position, turn the ignition key to LOCK and check that the ignition key can be removed.

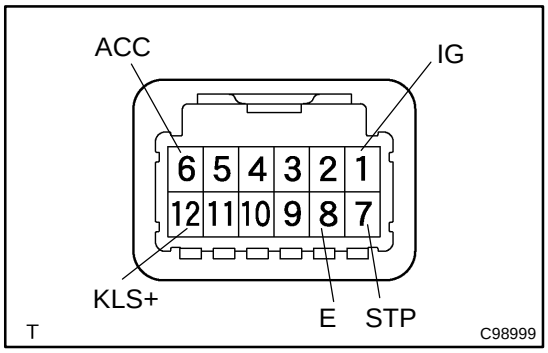

4. INSPECT SHIFT LOCK CONTROL UNIT ASSEMBLY

(a) Using a voltmeter, measure the voltage at each terminal.

HINT:
Do not disconnect the shift lock control unit assembly connector.

Terminal	Measuring Condition	Voltage (V)
6 (ACC) - 8 (E)	Ignition switch ACC	10 to 14
6 (ACC) - 8 (E)	Ignition switch OFF	Below 1
7 (STP) - 8 (E)	Depress brake pedal	10 to 14
7 (STP) - 8 (E)	Release brake pedal	Below 1
12 (KLS+) -8 (E)	6. Ignition switch ACC and P position 7. Ignition switch ACC and except P position 8. Ignition switch ACC and except P position (After approx. 1 second)	Below 1 7.5 to 11 6 to 9
1 (IG) - 8 (E)	Ignition switch ON	10 to 14
1 (IG) - 8 (E)	Ignition switch OFF	Below 1

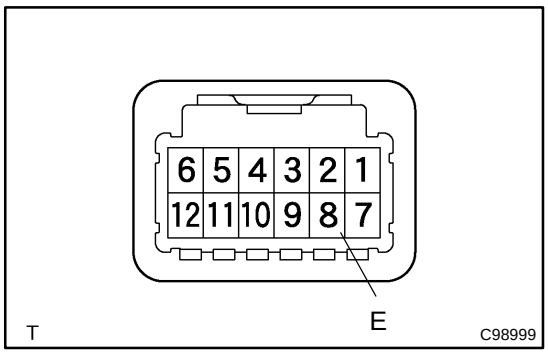

(b) Using an ohmmeter, measure the resistance at terminal E (8) and body ground.

HINT:

Do not disconnect the shift lock control unit assembly connector.

Terminal	Measuring Condition	Specified Value
8 (E) - Body ground	Constant	Continuity

AUTOMATIC TRANSAXLE ASSY (ATM)

400FX-02

PRECAUTION

1. **The automatic transaxle is composed of highly precision-finished parts which need careful inspection before reassembly therefore even a small nick may cause fluid leakage or may degrade the performance. The instructions here are organized in order to work on only one component group at a time. This will help you to avoid confusion comes about the similar-looking parts of the different sub-assemblies being on your workbench at the same time. Inspect and repair the component groups from the converter housing side. Complete the inspection, repair and reassembly Complate the inspection, repair and reassembly before proceeding to the next component group. If a defect is found in a certain component group during reassembly, inspect and repair this group immediately. If a component group cannot be assembled because the necessary parts are being ordered, be sure to keep all the parts of the group in a separate container while proceeding with disassembly, inspection, repair and reassembly of the other component groups.**
   Recommended ATF: T-IV
2. **All the disassembled parts should be washed clean and any fluid passages and holes should be blown with compressed air.**
3. **Dry all parts with compressed air. Never use shop rags to dry them.**
4. **Be careful of ATF or kerosene not to be squirted over your face when using compressed air.**
5. **The recommended automatic transaxle fluid or kerosene should be used for cleaning.**
6. **After cleaning, the parts should be arranged in the correct order for efficient inspection, repairs, and reassembly.**
7. **When disassembling the valve body, be sure to match each valve together with the corresponding spring.**
8. **New discs for the replacement of the brakes and clutches must be soaked in ATF for at least 15 minutes before reassembly.**
9. **All the oil seal rings, clutch discs, clutch plates, rotating parts, and sliding surfaces should be coated with ATF prior to reassembly.**
10. **Replace all the gaskets and rubber O-rings.**
11. **Do not apply adhesive cements to the gaskets and similar parts.**
12. **Make sure that the ends of the snap ring are not aligned with one of the cutouts and are installed in the groove correctly.**
13. **If a worn bushing is to be replaced, the sub-assembly containing the bushing must also be replaced.**
14. **Check the thrust bearings and races for wear or damage. Replace them as necessary.**
15. **Use petroleum jelly to keep the parts in place.**
16. **When working with FIPG material, you must follow the procedure below.**

- **Remove all the old packing (FIPG) material from the gasket surface using a razor blade and a gasket scraper.**
- **Thoroughly clean all the components to remove all the loose material.**
- **Clean both the sealing surfaces with non-residue solvent.**
- **Parts must be reassembled within 10 minutes of application. Otherwise, the packing (FIPG) material must be removed and reapplied.**

4011A-03

OVERHAUL

1. **DISCONNECT BATTERY NEGATIVE TERMINAL**
2. **REMOVE FRONT DOOR SCUFF PLATE LH (See page 71-10)**
3. **REMOVE FRONT DOOR SCUFF PLATE RH (See page 71-10)**
4. **REMOVE COWL SIDE TRIM BOARD LH (See page 71-10)**
5. **REMOVE COWL SIDE TRIM BOARD RH (See page 71-10)**
6. **REMOVE INSTRUMENT PANEL FINISH PANEL SUB-ASSY LOWER LH (See page 71-10)**
7. **REMOVE GLOVE COMPARTMENT DOOR STOPPER SUB-ASSY (See page 71-10)**
8. **REMOVE GLOVE COMPARTMENT DOOR ASSY (See page 71-10)**
9. **REMOVE FLOOR CARPET COVER CENTER LH (See page 71-10)**
10. **REMOVE FLOOR CARPET COVER CENTER RH (See page 71-10)**
11. **REMOVE INSTRUMENT CLUSTER FINISH PANEL CENTER NO.1 (See page 71-10)**
12. **REMOVE INSTRUMENT CLUSTER FINISH PANEL CENTER NO.2 (See page 71-10)**

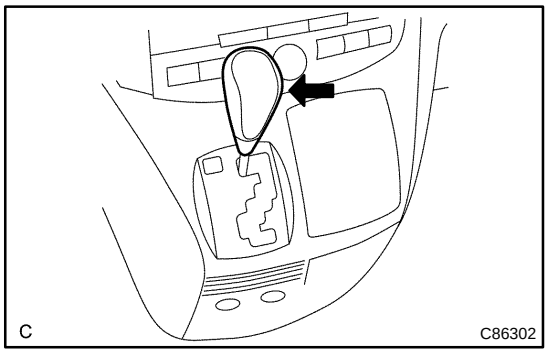

13. REMOVE SHIFT LEVER KNOB SUB-ASSY

(a) Remove the floor shift lever knob sub-assy.

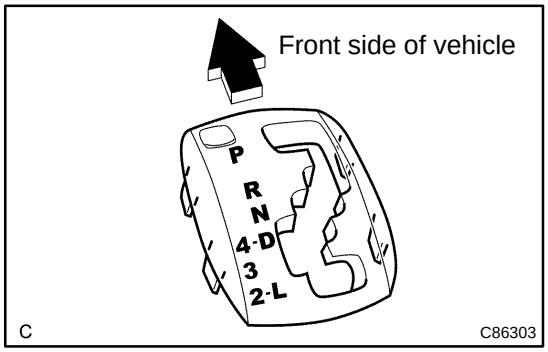

14. REMOVE POSITION INDICATOR HOUSING ASSY

(a) Using a screwdriver, remove the position indicator housing assy from the instrument cluster finish panel assy center.

15. REMOVE INSTRUMENT CLUSTER FINISH PANEL ASSY CENTER (See page 71-10)

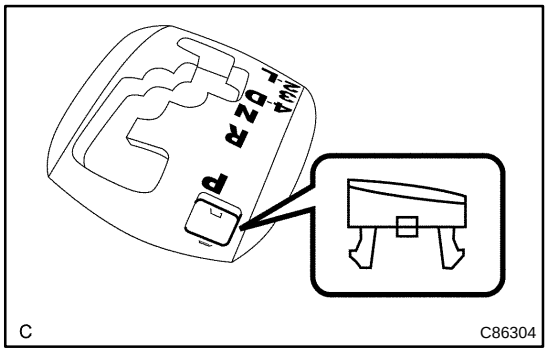

16. REMOVE SHIFT LEVER CAP

(a) Using a small screwdriver, remove the shift lever cap from the position indicator housing assy.

17. REMOVE INSTRUMENT CLUSTER FINISH PANEL SUB-ASSY LOWER CENTER (See page 71-10)

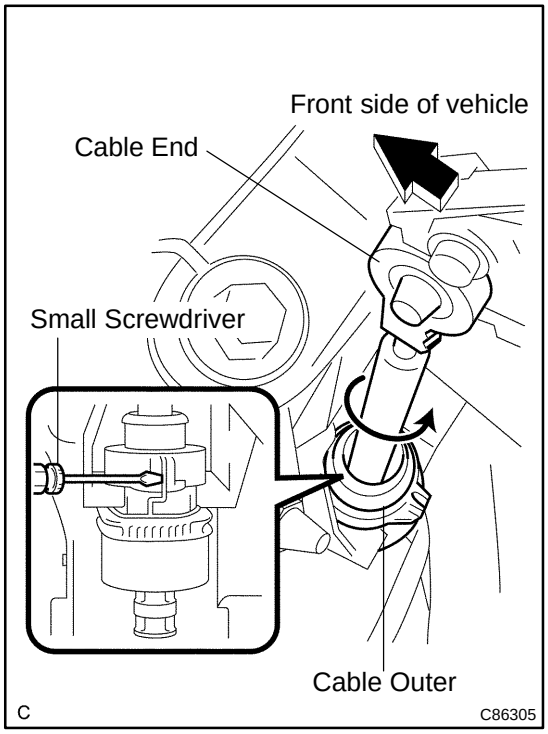

18. DISCONNECT TRANSMISSION CONTROL CABLE ASSY

(a) Using a screwdriver, disconnect the cable end from the shift lever assy.

(b) Using a small screwdriver, disconnect the cable outer of transmission control cable assy from the shift lever assy.

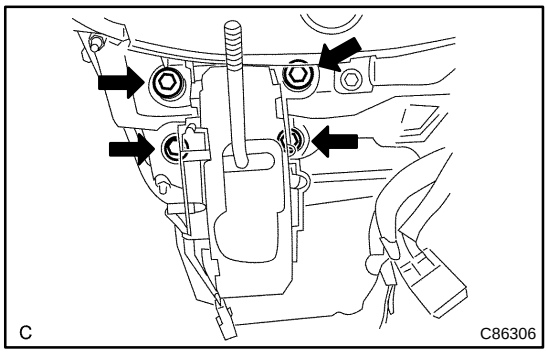

19. REMOVE SHIFT LEVER ASSY

(a) Disconnect the 2 connectors.

(b) Remove the 4 bolts and disconnect the shift lever assy from the vehicle.

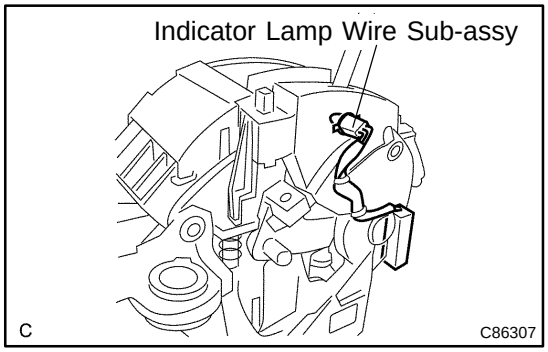

20. REMOVE INDICATOR LAMP WIRE SUB-ASSY

(a) Remove the indicator lamp wire sub assy from the position indicator light guide.

21. REMOVE POSITION INDICATOR LAMP BULB

(a) Remove the shift position indicator lamp bulb from the indicator lamp wire sub-assy.

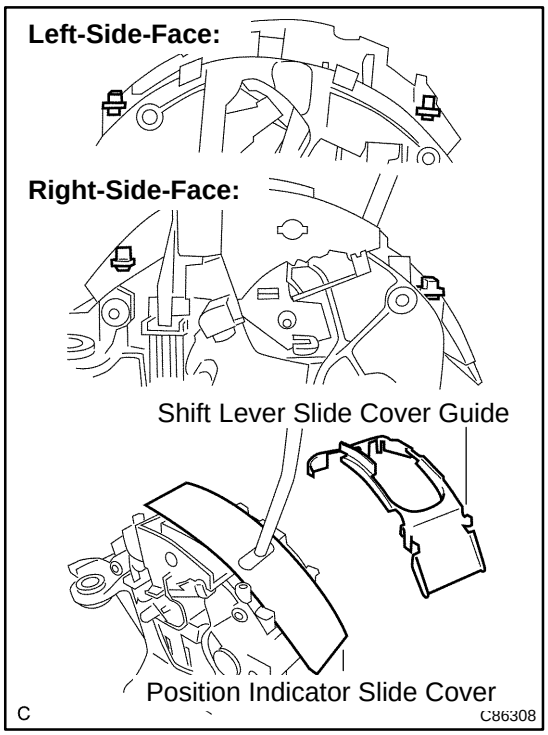

22. REMOVE POSITION INDICATOR SLIDE COVER

(a) Remove the shift lever slide cover guide from the shift lever assy.

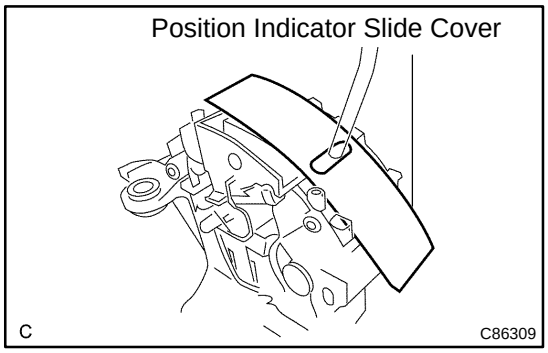

(b) Remove the position indicator slide cover from the shift lever assy.

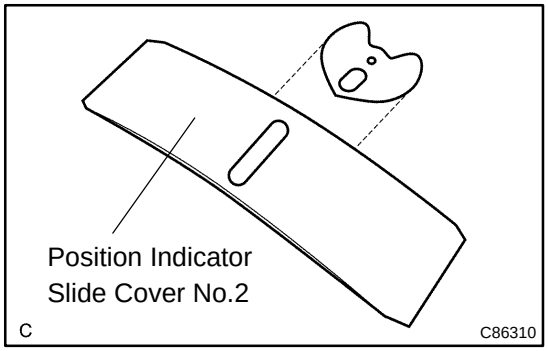

23. REMOVE POSITION INDICATOR SLIDE COVER

(a) Remove the position indicator slide cover No.2 from the position indicator slide cover.

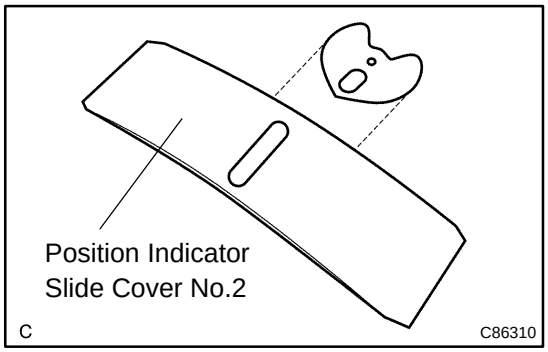

24. INSTALL POSITION INDICATOR SLIDE COVER

(a) Install the position indicator slide cover No.2 to the position indicator slide cover.

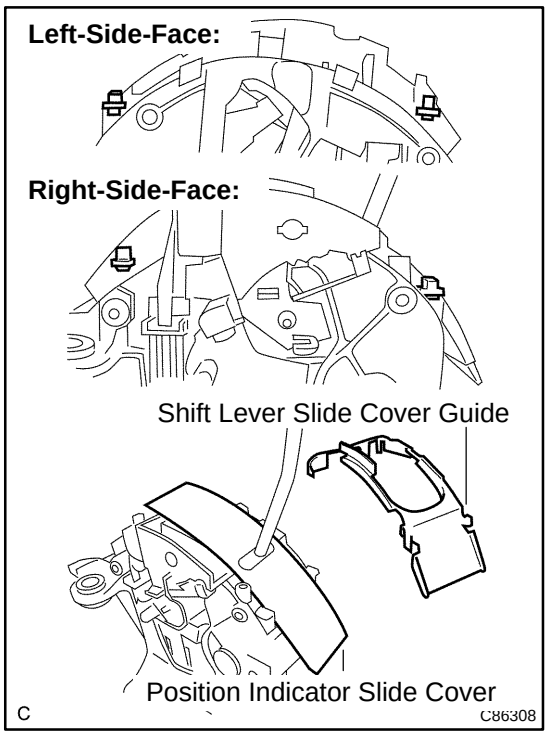

25. INSTALL POSITION INDICATOR SLIDE COVER

(a) Install the position indicator slide cover to the shift lever assy.

(b) Install the shift lever slide cover guide to the shift lever assy.

26. INSTALL POSITION INDICATOR LAMP BULB

(a) Install the shift position indicator lamp bulb to the indicator lamp wire sub-assy.

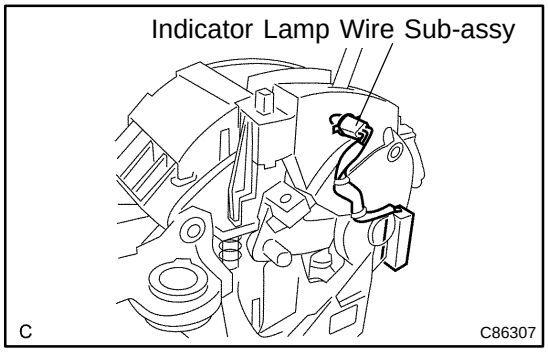

27. INSTALL INDICATOR LAMP WIRE SUB-ASSY

(a) Install the indicator lamp wire sub-assy to the shift lever assy.

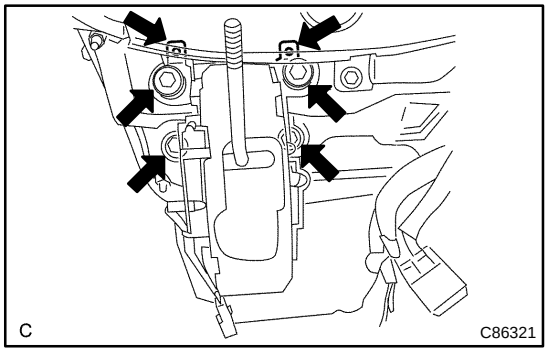

28. INSTALL SHIFT LEVER ASSY

(a) Install shift lever assy to the vehicle with the 4 bolts.
Torque: 21 N·m (214 kgf·cm, 15 ft·lbf)

NOTICE:
Into datum hole of shift lever into datum pin of instrument lower.

(b) Connect the 2 connectors to the shift lever assy.

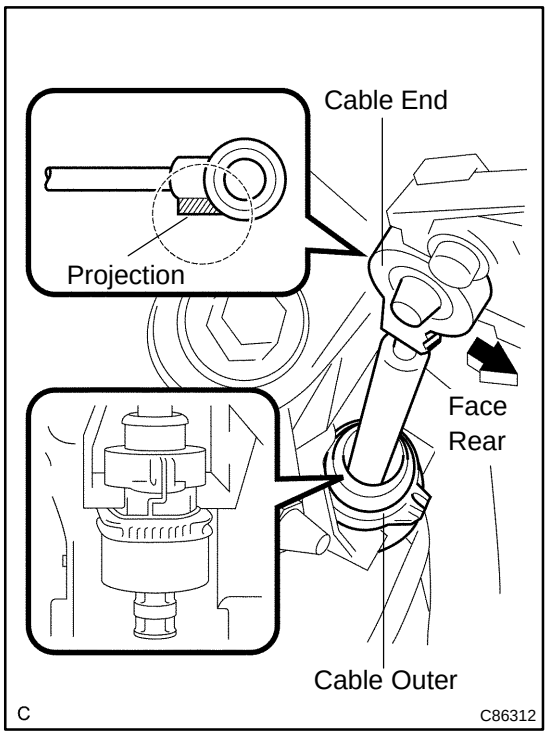

29. CONNECT TRANSMISSION CONTROL CABLE ASSY

(a) Install the cable outer to the shift lever plate.

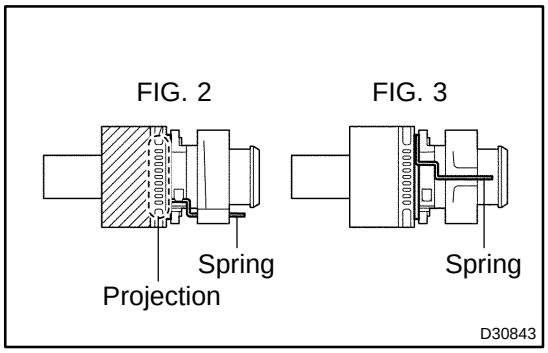

(b) When installing the transmission control cable assy on the shift lever plate, place the projection of the shift cable downward to fit in the groove of the shift lever plate (FIG. 2).
Confirm that the spring in the shift cable outer has moved to the position (FIG. 3) shown in the illustration.
Confirm that the shift cable is installed on the shift lever plate properly.

NOTICE:

- **To prevent torsion of the inner cable, the projection on the eye end should face rear.**
- **Push the cable end to the bottom of the pin.**

30. INSTALL INSTRUMENT CLUSTER FINISH PANEL SUB-ASSY LOWER CENTER

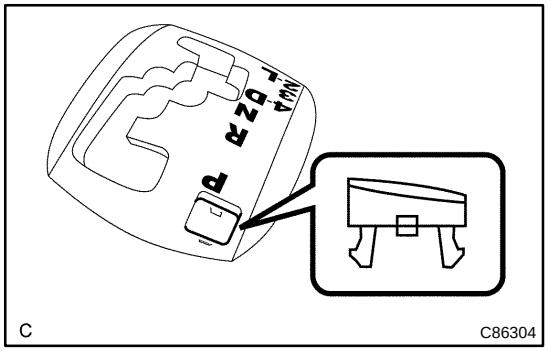

31. INSTALL SHIFT LEVER CAP

(a) Install the shift lever cap to the floor shift position indicator housing assy.

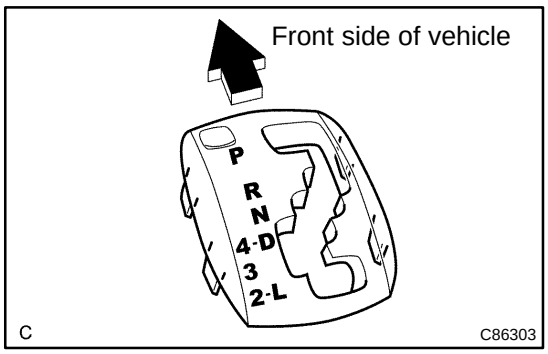

32. INSTALL POSITION INDICATOR HOUSING ASSY

(a) Install the position indicator housing assy to the instrument cluster finish panel assy center.

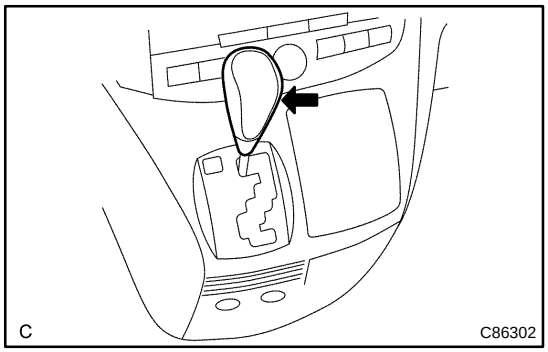

33. INSTALL SHIFT LEVER KNOB SUB-ASSY

(a) Install the shift lever knob sub-assy.

34. ADJUST SHIFT LEVER POSITION (See page 40-44)

35. INSPECT SHIFT LEVER POSITION (See page 40-44)

36. INSPECT CHECK KEY INTERLOCK OPERATION (See page 40-34)

37. INSPECT CHECK SHIFT LOCK OPERATION (See page 40-34)

38. INSPECT CHECK SHIFT LOCK RELEASE BUTTON OPERATION (See page 40-34)

PARK/NEUTRAL POSITION SWITCH ASSY (U151E/U151F)

4011E-01

REPLACEMENT

1. **REMOVE BATTERY**
2. **REMOVE AIR CLEANER ASSY**
3. **REMOVE AIR CLEANER HOSE NO.1**
4. **REMOVE AIR CLEANER INLET NO.2**
5. **REMOVE AIR CLEANER BRACKET**
6. **REMOVE AIR CLEANER INLET NO.1**
7. **REMOVE INTAKE AIR RESONATOR SUB-ASSY**

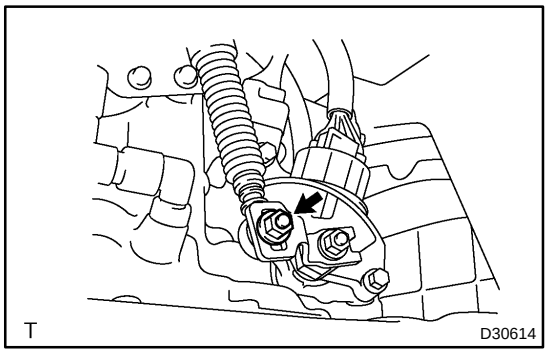

8. REMOVE PARK/NEUTRAL POSITION SWITCH ASSY

(a) Remove the nut from the control shaft lever.

(b) Disconnect the control cable from the control shaft lever.

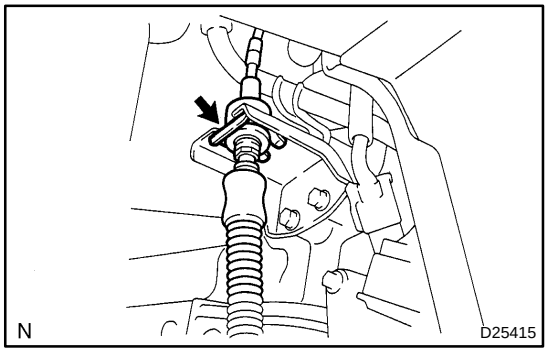

(c) Remove the clip and disconnect the control cable from the control cable bracket.

NOTICE:

Do not hold the resin guide pipe.

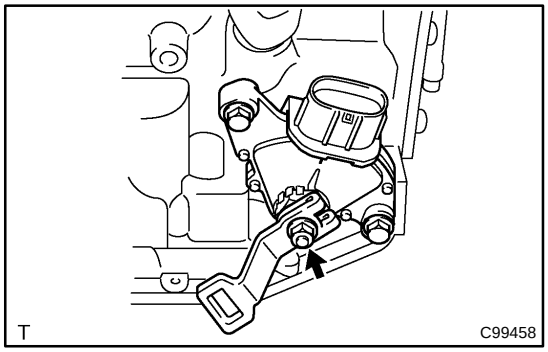

(d) Disconnect the park/neutral position switch connector.

(e) Remove the nut, washer and control shaft lever.

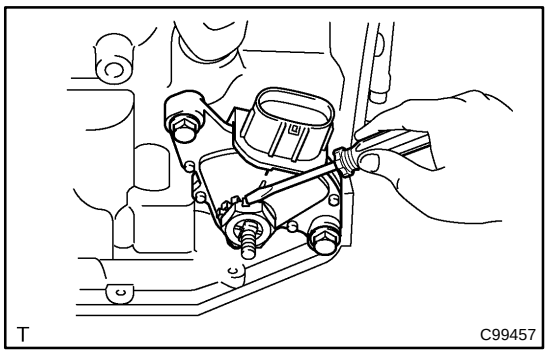

(f) Using a screwdriver, pry out the lock plate.

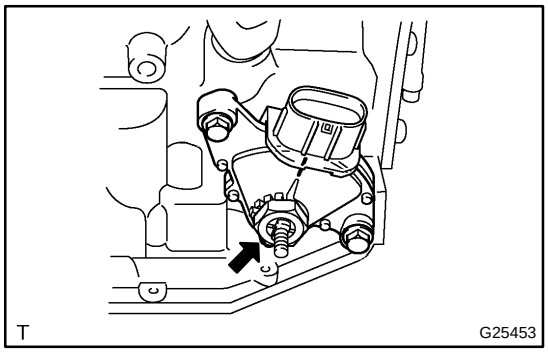

(g) Remove the lock nut and lock plate.

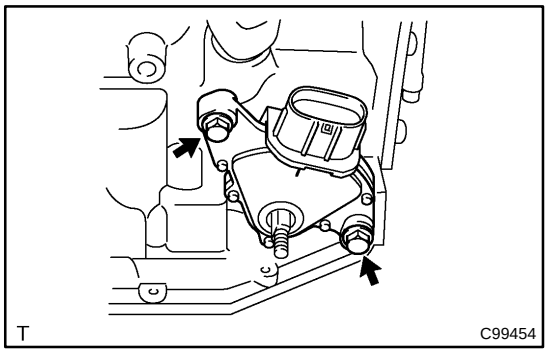

(h) Remove the 2 bolts and pull out the park/neutral position switch.

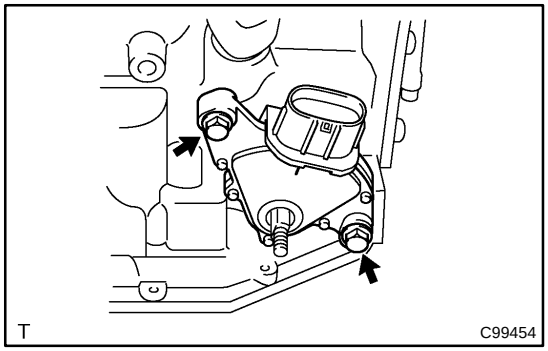

9. INSTALL PARK/NEUTRAL POSITION SWITCH ASSY

(a) Install the park/neutral position switch to the manual valve shaft.

(b) Temporarily install the 2 bolts.

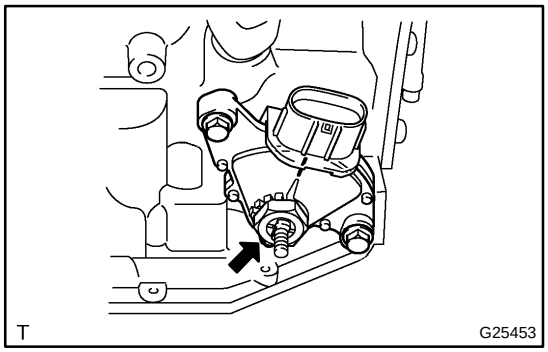

(c) Place the lock plate and tighten the nut.
Torque: 6.9 N·m (70 kgf·cm, 61 in.·lbf)

(d) Temporarily install the control shaft lever.

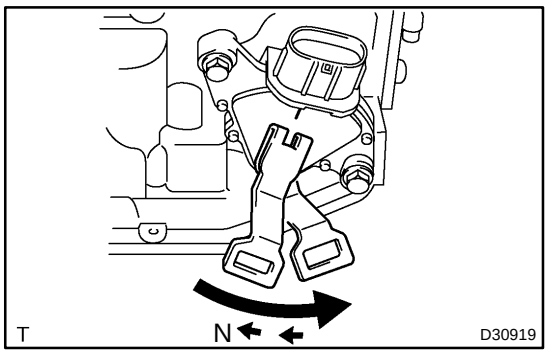

(e) Turn the lever counterclockwise until it stops, then turn it clockwise for 2 notches.

(f) Remove the control shaft lever.

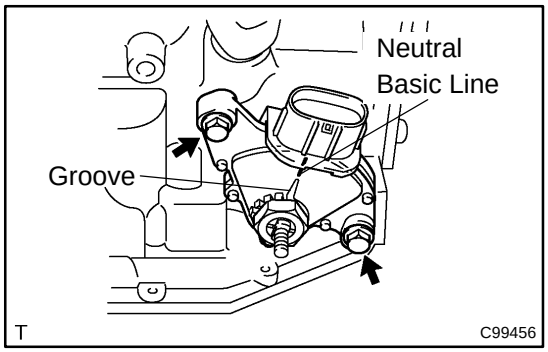

(g) Align the groove with the neutral basic line.

(h) Hold the switch in position and tighten the 2 bolts.
Torque: 5.4 N·m (55 kgf·cm, 48 in.·lbf)

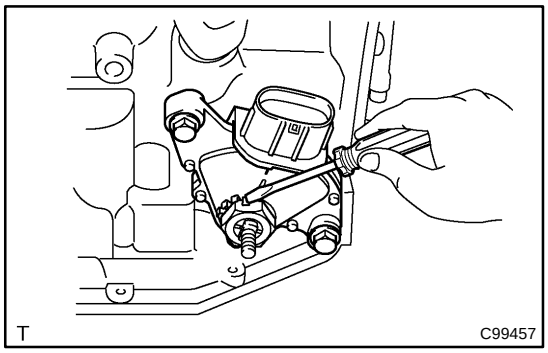

(i) Using a screwdriver, stake the nut with the lock plate.

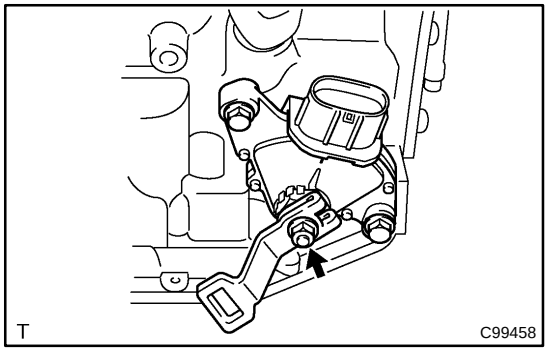

(j) Install the control shaft lever, washer and nut.
Torque: 13 N·m (130 kgf·cm, 9 ft·lbf)

(k) Connect the park/neutral position switch connector.

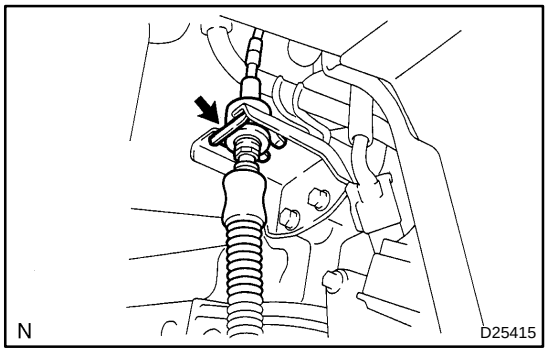

(l) Install the control cable and clip to the bracket.

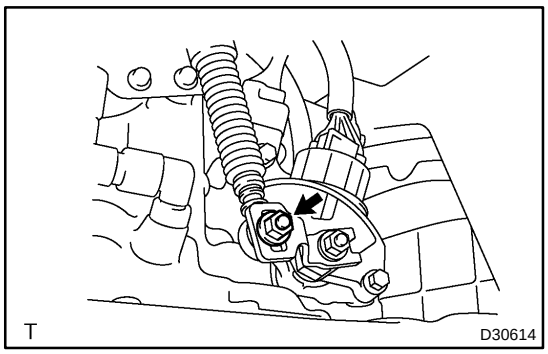

(m) Temporarily install the control cable to the control shaft lever with the nut.

10. ADJUST SHIFT LEVER POSITION (See page 40-44)
11. INSPECT SHIFT LEVER POSITION (See page 40-44)
12. INSPECT PARK/NEUTRAL POSITION SWITCH ASSY (See page 40-7)
13. INSTALL INTAKE AIR RESONATOR SUB-ASSY
14. INSTALL AIR CLEANER INLET NO.1
15. INSTALL AIR CLEANER BRACKET
16. INSTALL AIR CLEANER INLET NO.2
17. INSTALL AIR CLEANER HOSE NO.1
18. INSTALL AIR CLEANER ASSY
19. INSTALL BATTERY

TRANSMISSION WIRE (U151E/U151F)

400FS-05

REPLACEMENT

1. REMOVE ENGINE UNDER COVER NO.1

2. DRAIN AUTOMATIC TRANSAXLE FLUID

(a) Remove the drain plug and gasket, and drain ATF.

(b) Install a new gasket and drain plug.
Torque: 49 N·m (500 kgf·cm, 36 ft·lbf)

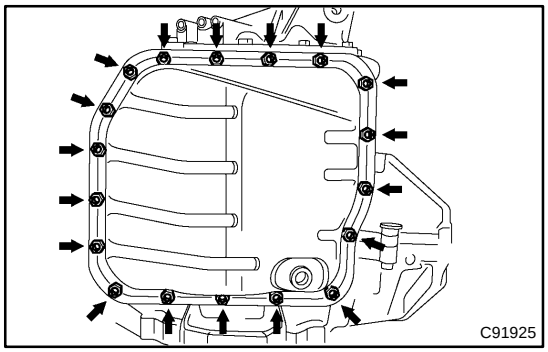

3. REMOVE AUTOMATIC TRANSAXLE OIL PAN SUB-ASSY

(a) Remove the 18 bolts, oil pan and gasket.

NOTICE:

Some fluid will remain in the oil pan. Remove all pan bolts, and carefully remove the oil pan assembly.

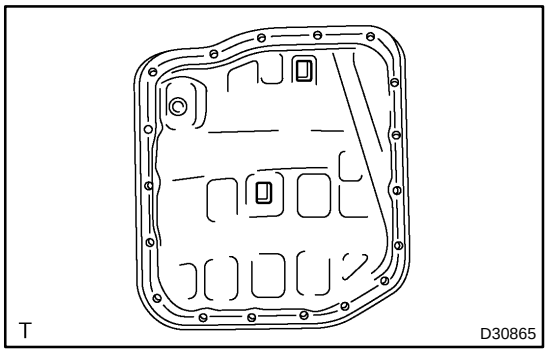

(b) Remove the 2 magnets from the oil pan.

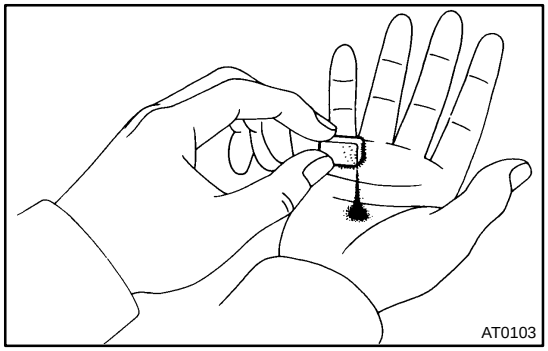

(c) Examine particles in the oil pan.
(1) Remove the magnets and use them to collect any steel chips. Look at the chips and particles in the oil pan and on the magnet carefully to see the type of wear which might be found in the transaxle.
Steel (magnetic): bearing, gear and plate wear
Brass (non-magnetic): bearing wear

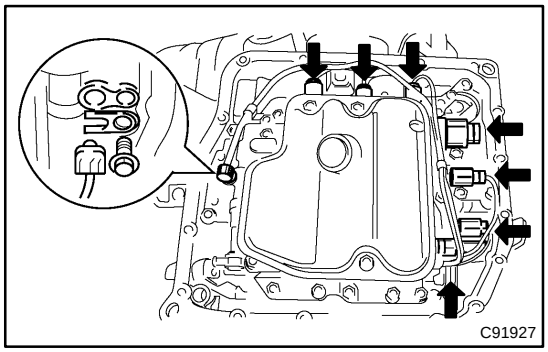

4. DISCONNECT TRANSMISSION WIRE

(a) Disconnect the 7 shift solenoid valve connectors.

(b) Remove the bolt and lock plate, and disconnect the ATF temperature sensor.

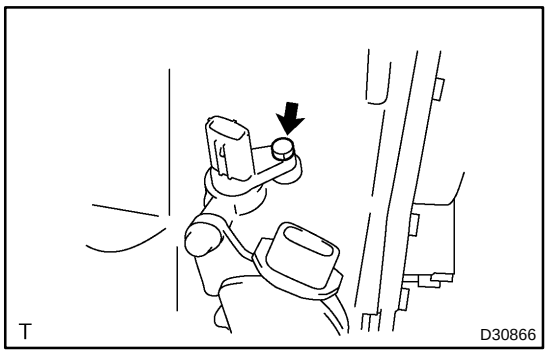

5. REMOVE TRANSMISSION WIRE

(a) Disconnect the transmission wire connectors.

(b) Remove the bolt and transmission wire.

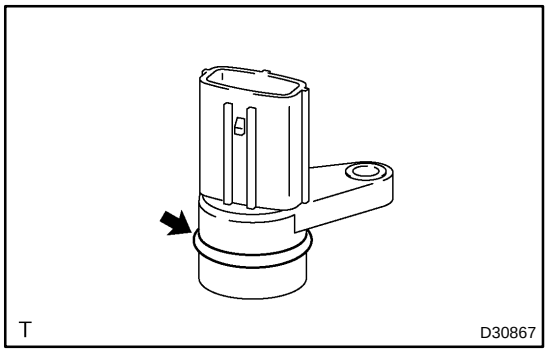

6. INSTALL TRANSMISSION WIRE

(a) Coat an O-ring of the transmission wire connector with ATF.

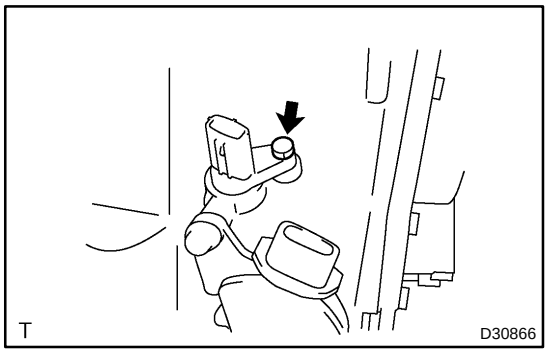

(b) Install the transmission wire and bolt.
Torque: 5.4 N·m (55 kgf·cm, 48 in.·lbf)

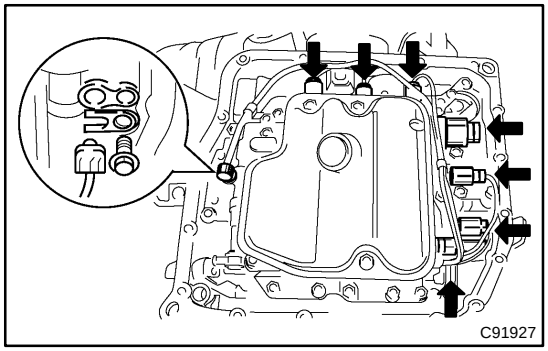

7. CONNECT TRANSMISSION WIRE

(a) Coat an O-ring of the ATF temperature sensor with ATF.

(b) Install the ATF temperature sensor with the lock plate and bolt.
Torque: 6.6 N·m (67 kgf·cm, 58 in.·lbf)

(c) Connect the 7 shift solenoid valve connectors.

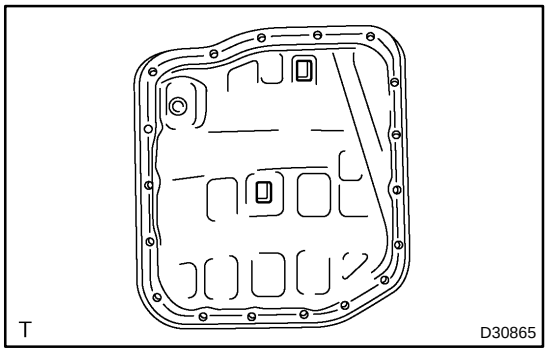

8. INSTALL AUTOMATIC TRANSAXLE OIL PAN SUB-ASSY

(a) Install the 2 magnets in the oil pan.

(b) Apply the seal packing or the equivalent to the 18 bolts.
Seal packing:
THREE BOND 1344 or equivalent

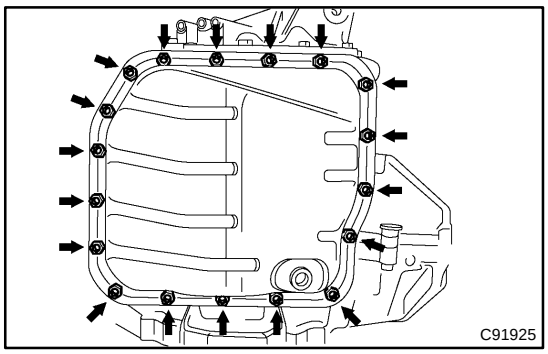

(c) Install a new gasket, oil pan and 18 bolts to the transaxle case.
Torque: 7.8 N·m (80 kgf·cm, 69 in.·lbf)

NOTICE:
Apply the seal packing or equivalent to the bolts and tighten them within 10 minutes after application because the bolts should be seal bolts.

9. INSTALL ENGINE UNDER COVER NO.1
10. RESET MEMORY (See page 05-533)

TRANSMISSION VALVE BODY ASSY (U151E/U151F)

400FT-05

REPLACEMENT

1. REMOVE ENGINE UNDER COVER NO.1

2. DRAIN AUTOMATIC TRANSAXLE FLUID

(a) Remove the drain plug and gasket, and drain ATF.

(b) Install a new gasket and drain plug.
Torque: 49 N·m (500 kgf·cm, 36 ft·lbf)

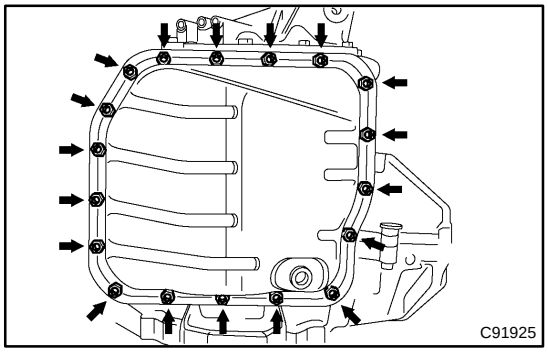

3. REMOVE AUTOMATIC TRANSAXLE OIL PAN SUB-ASSY

(a) Remove the 18 bolts, oil pan and gasket.

NOTICE:
Some fluid will remain in the oil pan. Remove all pan bolts, and carefully remove the oil pan assembly.

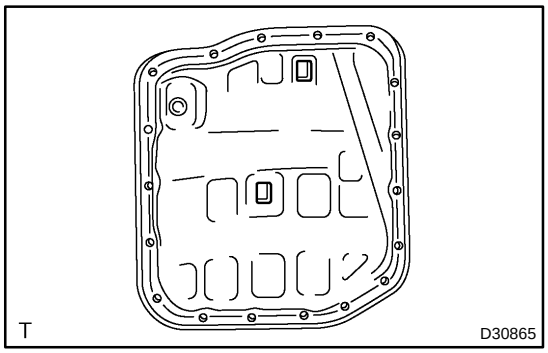

(b) Remove the 2 magnets from the oil pan.

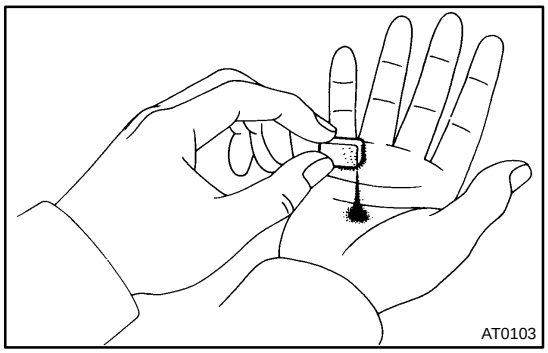

(c) Examine particles in the oil pan.
(1) Remove the magnets and use them to collect any steel chips. Look at the chips and particles in the oil pan and on the magnet carefully to see the type of wear which might be found in the transaxle.
Steel (magnetic): bearing, gear and plate wear
Brass (non-magnetic): bearing wear

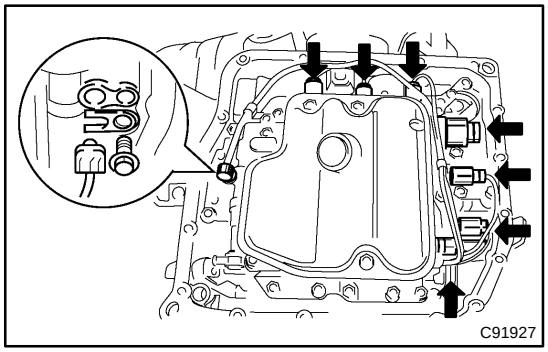

4. DISCONNECT TRANSMISSION WIRE

(a) Disconnect the 7 shift solenoid valve connectors.

(b) Remove the bolt and lock plate, and disconnect the ATF temperature sensor.

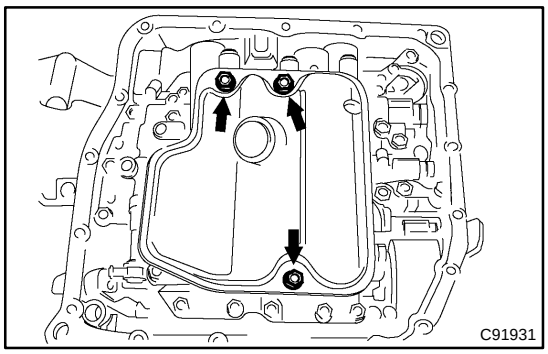

5. REMOVE VALVE BODY OIL STRAINER ASSY

(a) Remove the 3 bolts and oil strainer.

NOTICE:

Be careful that some fluid will come out of the oil strainer.

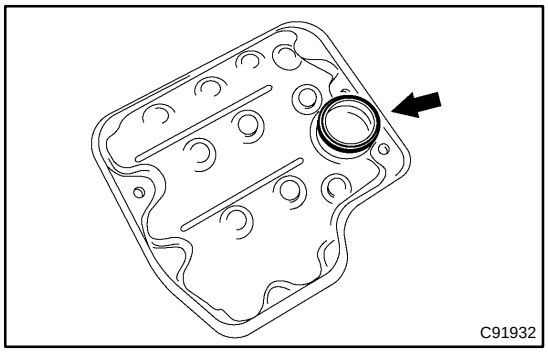

(b) Remove the O-ring from the oil strainer.

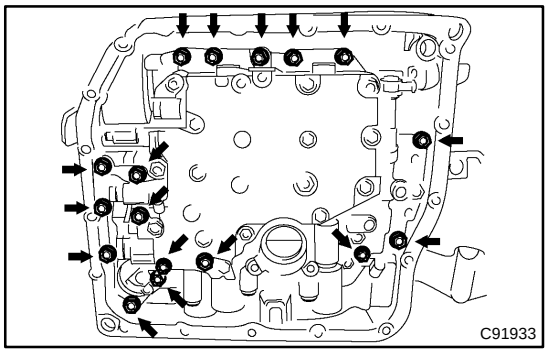

6. REMOVE TRANSMISSION VALVE BODY ASSY

(a) Support the valve body assy and remove the 17 bolts and the valve body assy.

NOTICE:

Be careful not to drop the check valve body, spring and accumulator piston.

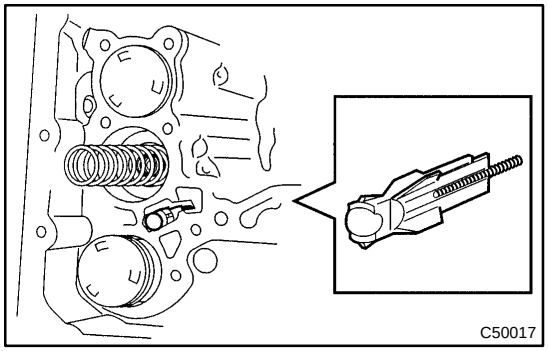

(b) Remove the check ball body and spring.

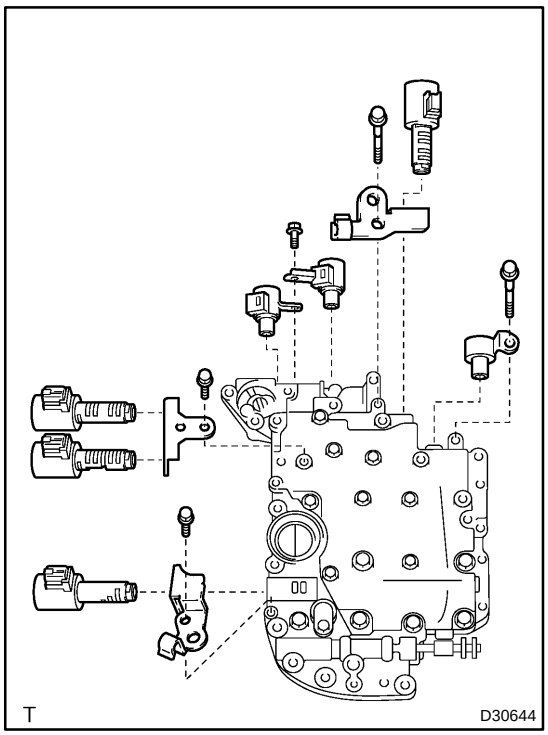

(c) Remove the 5 bolts and 7 shift solenoid valves.

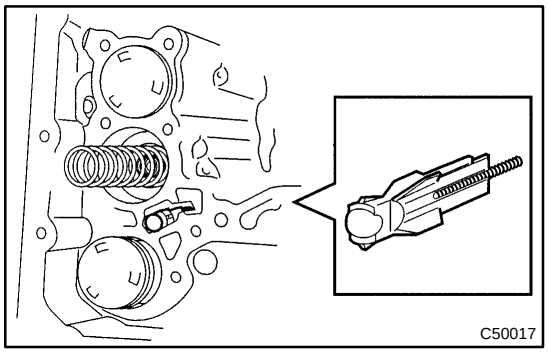

7. INSTALL TRANSMISSION VALVE BODY ASSY

(a) Install the spring and check ball body.

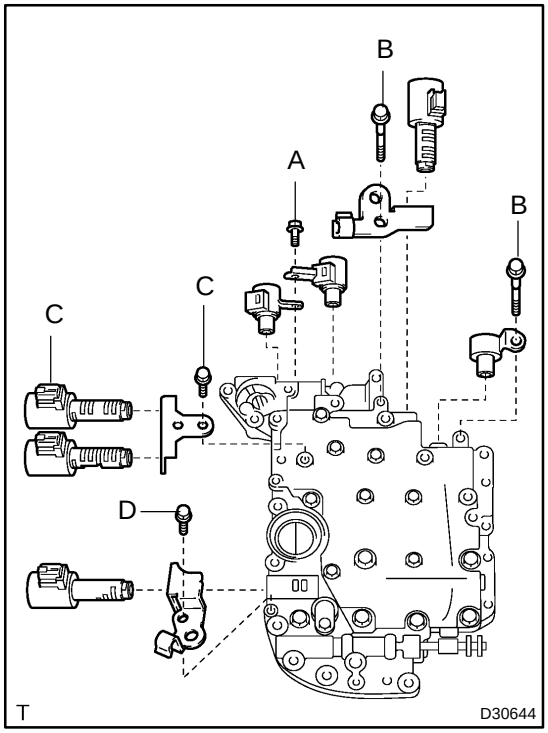

(b) Install the 7 shift solenoid valves with the 5 bolts.
Torque:
Bolt A, B: 11 N·m (110 kgf·cm, 8 ft.·lbf)
Bolt C, D: 6.6 N·m (67 kgf·cm, 58 in. lbf)
Bolt length:
Bolt A: 16 mm (0.63 in.)
Bolt B: 57 mm (2.20 in.)
Bolt C: 23 mm (0.90 in.)
Bolt D: 12 mm (0.47 in.)

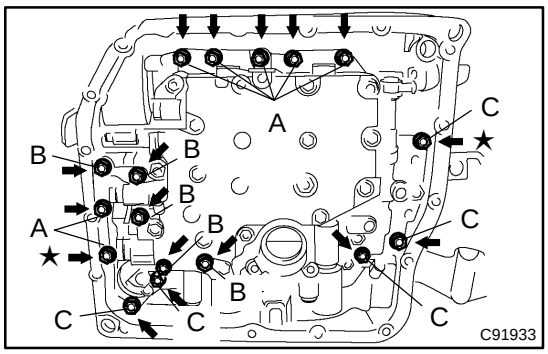

(c) Align the groove of the manual valve with the pin of lever.
(d) Install the 17 bolts.
Torque: 11 N·m (110 kgf·cm, 8 ft·lbf)

NOTICE:

- **Push the valve body against the accumulator piston spring and the check ball body to install it.**
- **Tighten those bolts marked by ★ in the illustration first temporarily because they are positioning bolts.**
  Bolt length:
  Bolt A: 41 mm (1.614 in.)
  Bolt B: 57 mm (2.244 in.)
  Bolt C: 25 mm (0.984 in.)

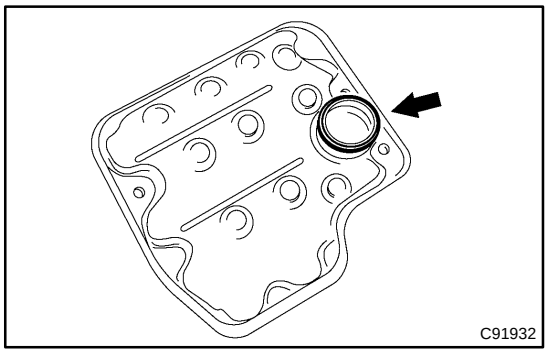

8. INSTALL VALVE BODY OIL STRAINER ASSY

(a) Coat an new O-ring with ATF.
(b) Install the O-ring to the oil strainer.

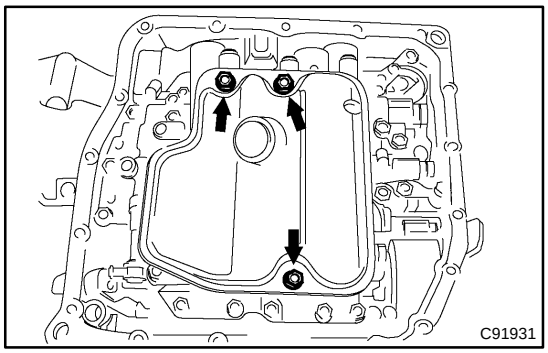

(c) Install the oil strainer with the 3 bolts.
Torque: 11 N·m (110 kgf·cm, 8 ft·lbf)

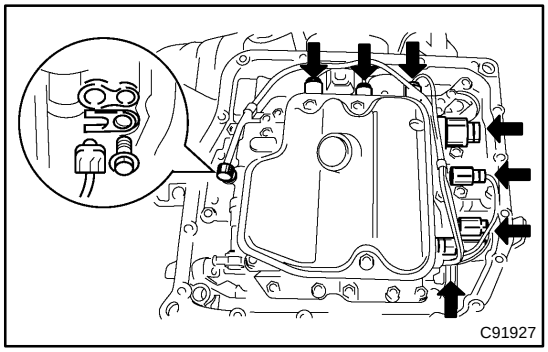

9. CONNECT TRANSMISSION WIRE

(a) Coat an O-ring with ATF.
(b) Install the ATF temperature sensor with the lock plate and bolt.
Torque: 6.6 N·m (67 kgf·cm, 58 in.·lbf)
(c) Connect the 7 shift solenoid valve connectors.

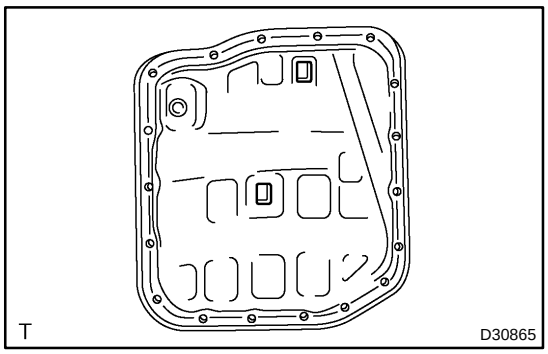

10. INSTALL AUTOMATIC TRANSAXLE OIL PAN SUB-ASSY

(a) Install the 2 magnets in the oil pan.

(b) Apply seal packing or equivalent to 18 bolts.
Seal packing:
THREE BOND 1344 or equivalent

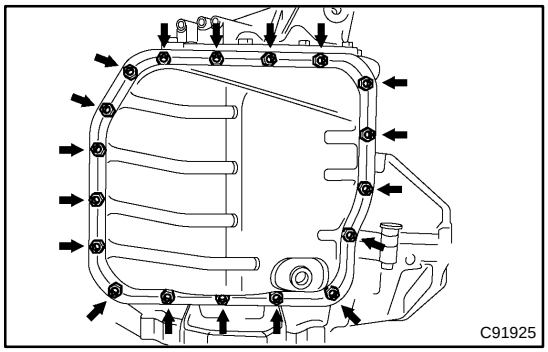

(c) Install a new gasket, oil pan and 18 bolts to the transaxle case.
Torque: 7.8 N·m (80 kgf·cm, 69 in.·lbf)

NOTICE:
Apply the seal packing or equivalent to the bolts and tighten them within 10 minutes after application because the bolts should be seal bolts.

11. INSTALL ENGINE UNDER COVER NO.1

12. RESET MEMORY (See page 05-533)

FRONT DIFFERENTIAL OIL SEAL (U151E)

40066-07

REPLACEMENT

1. REMOVE FRONT WHEELS

2. REMOVE ENGINE UNDER COVER NO.1

3. DRAIN AUTOMATIC TRANSAXLE FLUID

(a) Remove the drain plug, gasket and drain ATF.

(b) Install a new gasket and drain plug.
Torque: 49 N·m (500 kgf·cm, 36 ft·lbf)

4. REMOVE FRONT DRIVE SHAFT ASSY RH (See page 30-18)

5. REMOVE FRONT DRIVE SHAFT ASSY LH (See page 30-18)

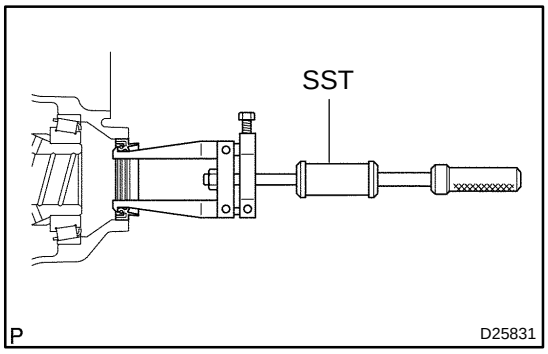

6. REMOVE TRANSAXLE HOUSING OIL SEAL

(a) Using SST, pull out the oil seal.
SST 09308-00010

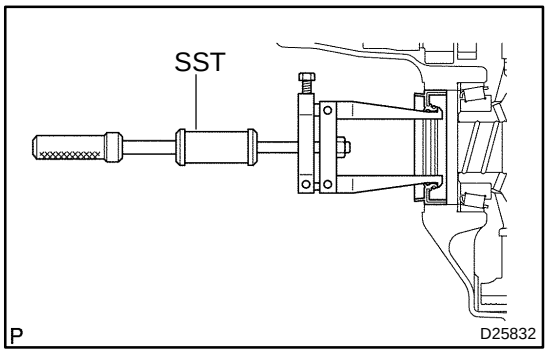

7. REMOVE DIFFERENTIAL SIDE BEARING RETAINER OIL SEAL

(a) Using SST, pull out the oil seal.
SST 09308-00010

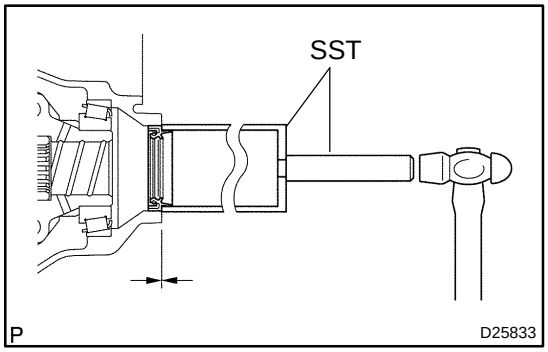

8. INSTALL TRANSAXLE HOUSING OIL SEAL

(a) Using SST and a hammer, drive in a new oil seal.
SST 09316-6001 1 (09316-00011)
Oil seal drive in depth:
0 ± 0.5 mm (0 ± 0.020 in.)

(b) Coat the lip of the oil seal with MP grease.

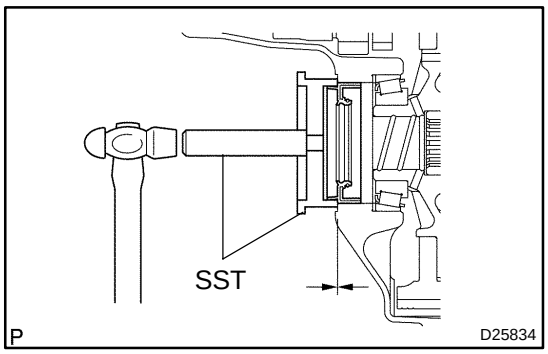

9. INSTALL DIFFERENTIAL SIDE BEARING RETAINER OIL SEAL

(a) Using SST and a hammer, drive in a new oil seal.
SST 09223-15020, 09950-70010 (09951-07150)
Oil seal drive in depth:
0 ± 0.5 mm (0 ± 0.020 in.)

(b) Coat the lip of the oil seal with MP grease.

10. INSTALL FRONT DRIVE SHAFT ASSY LH (See page 30-18)

11. INSTALL FRONT DRIVE SHAFT ASSY RH (See page 30-18)

12. INSTALL FRONT WHEELS
Torque: 103 N·m (1,050 kgf·cm, 76 ft·lbf)

13. ADD AUTOMATIC TRANSAXLE FLUID

14. INSPECT AUTOMATIC TRANSAXLE FLUID (See page 40-2)

15. INSTALL ENGINE UNDER COVER NO.1

16. CHECK ABS SPEED SENSOR SIGNAL

(a) ABS WITH EBD SYSTEM (See pege 05-386)

(b) ABS WITH EBD & BA &TRAC VSC & SYSTEM (See pege 05-435)

400ZO-02

REPLACEMENT

1. **REMOVE ENGINE ASSEMBLY WITH TRANSAXLE (See page 14-33)**
2. **REMOVE FRONT DRIVE SHAFT ASSY LH (See page 30-18)**
   SST 09520-01010, 09520-24010 (09520-32040)
3. **REMOVE FRONT DRIVE SHAFT ASSY RH (2WD DRIVE TYPE) (See page 30-18)**
4. **REMOVE FRONT DRIVE SHAFT ASSY RH (4WD DRIVE TYPE) (See page 30-18)**
   SST 09520-01010, 09520-24010 (09520-32040)

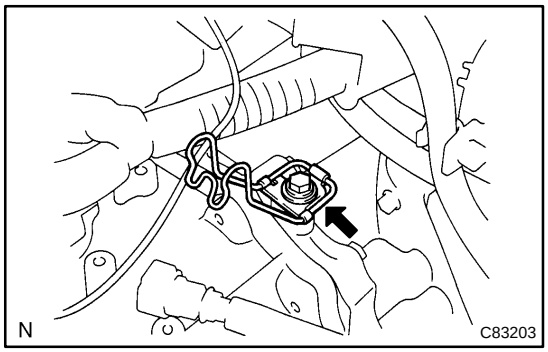

5. **REMOVE TRANSMISSION CONTROL CABLE BRACKET NO.2**
   (a) Remove the bolt and transmission control cable bracket No.2.

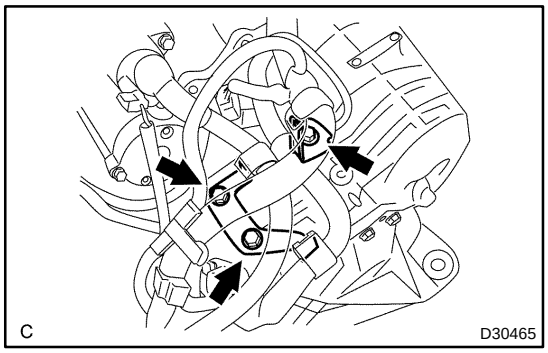

6. **REMOVE WIRE HARNESS CLAMP**
   (a) Disconnect the wire harnesses from the clamps.
   (b) Remove the 3 bolts and 2 clamps.

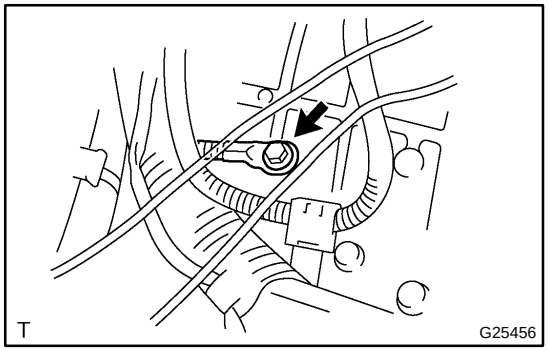

7. **DISCONNECT WIRE HARNESS**
   (a) Remove the bolt and wire harness.

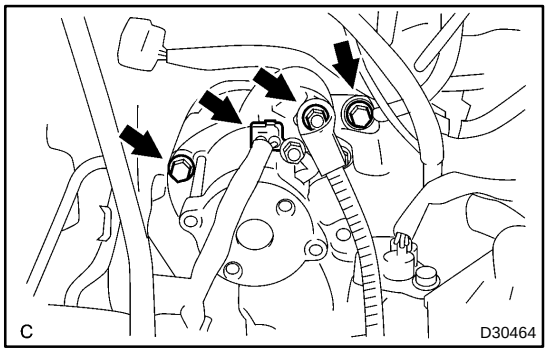

8. **REMOVE STARTER ASSY**
   (a) Remove the nut and disconnect the starter wire.
   (b) Disconnect the connector.
   (c) Remove the 2 bolts and starter assy.

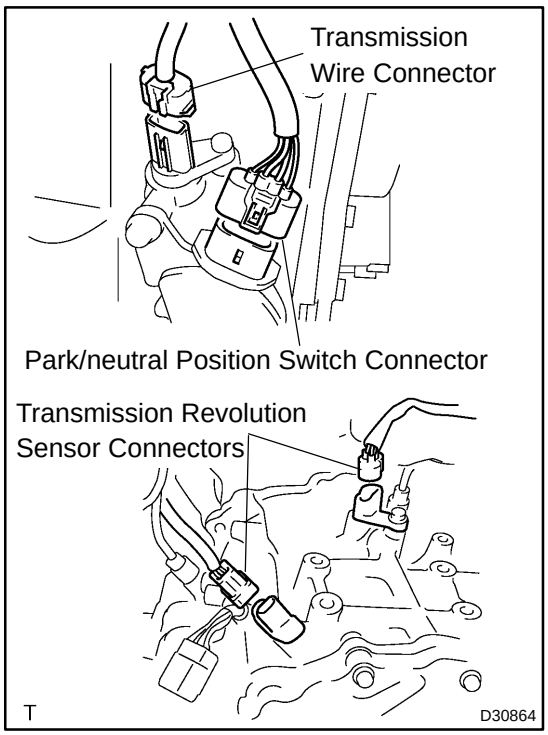

9. DISCONNECT CONNECTOR

(a) Disconnect the 2 transmission wire connectors.

(b) Disconnect the park/neutral position switch connector.

(c) Disconnect the 2 transmission revolution sensor connectors.

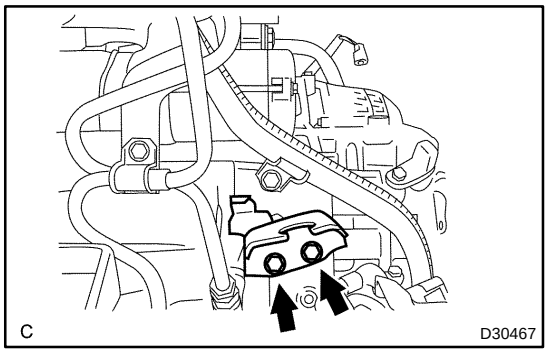

10. REMOVE TRANSMISSION CONTROL CABLE BRACKET NO.1

(a) Remove the bolt and oil cooler tube clamp.

(b) Remove the 2 bolts and transmission control cable bracket No.1.

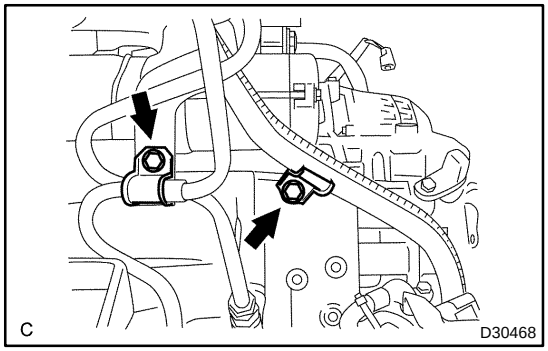

11. REMOVE TRANSMISSION OIL FILLER TUBE SUB-ASSY

(a) Remove the ATF level gauge.

(b) Disconnect the wire harnesses 2 clamps from the oil filler tube.

(c) Remove the 2 bolts and oil filler tube.

(d) Remove the O-ring from the oil filler tube.

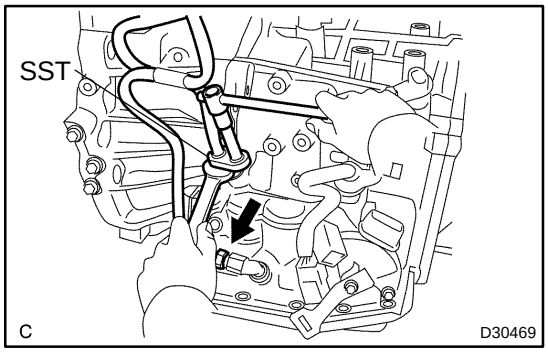

12. REMOVE OIL COOLER INLET TUBE NO.1

(a) Using SST and spanner, disconnect the oil cooler inlet tube No.1.
SST 09023-12701

13. REMOVE OIL COOLER OUTLET TUBE NO.1

(a) Using SST and spanner, disconnect the oil cooler outlet tube No.1.
SST 09023-12701

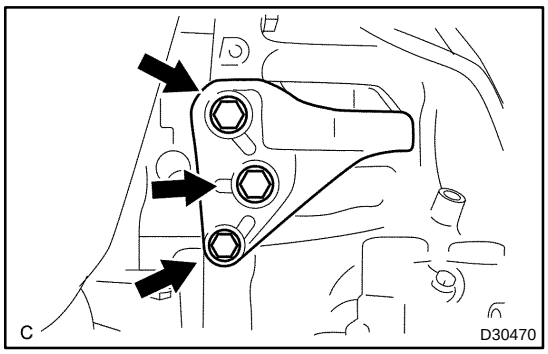

14. REMOVE ENGINE MOUNTING BRACKET FR

(a) Remove the 3 bolts and engine mounting bracket FR.

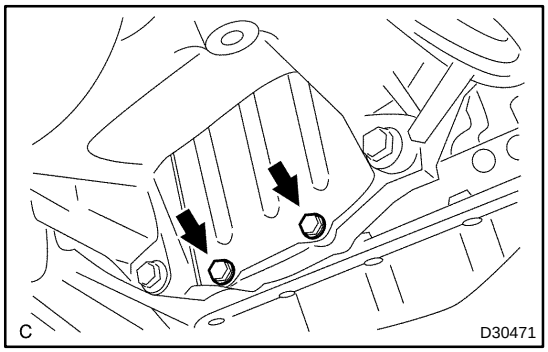

15. REMOVE AUTOMATIC TRANSAXLE ASSY (2WD DRIVE TYPE)

(a) Remove the 2 bolts and flywheel housing under cover.

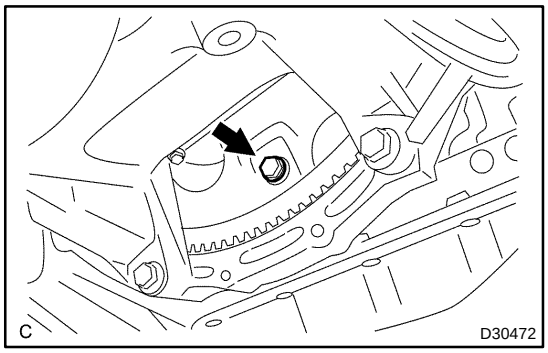

(b) Turn the crankshaft to gain access and remove the 6 bolts while holding the crankshaft pulley bolt with a wrench.

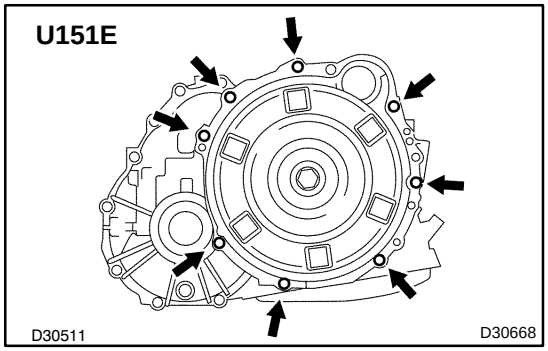

(c) Remove the 8 bolts.

(d) Separate and remove the automatic transaxle.

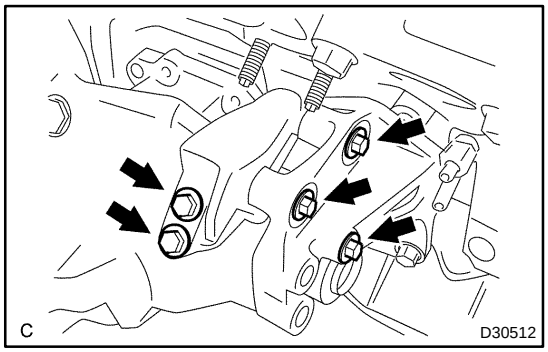

16. REMOVE TRANSFER STIFFENER PLATE RH (4WD DRIVE TYPE)

(a) Remove the 5 bolts, nut and transfer stiffener plate RH.

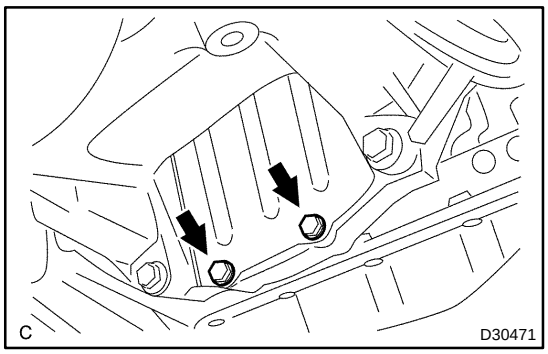

17. REMOVE AUTOMATIC TRANSMISSION W/TRANSFER (4WD DRIVE TYPE)

(a) Remove the 2 bolts and flywheel housing under cover.

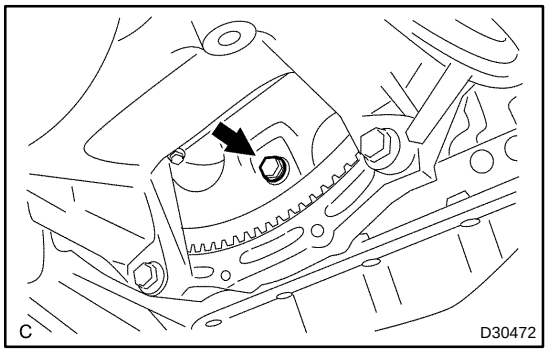

(b) Turn the crankshaft to gain access and remove the 6 bolts while holding the crankshaft pulley bolt with a wrench.

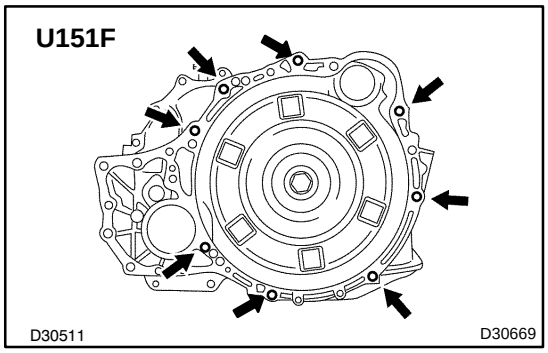

(c) Remove the 8 bolts.

(d) Separate and remove the automatic transaxle w/transfer.

18. REMOVE TRANSFER ASSY (4WD DRIVE TYPE) (See page 31-9)

19. REMOVE TORQUE CONVERTER CLUTCH ASSY

20. INSPECT TORQUE CONVERTER CLUTCH ASSY (See page 40-18)

SST 09350-32014 (09351-32010, 09351-32020)

21. INSTALL TORQUE CONVERTER CLUTCH ASSY

(a) Install the torque converter clutch to the automatic transaxle.

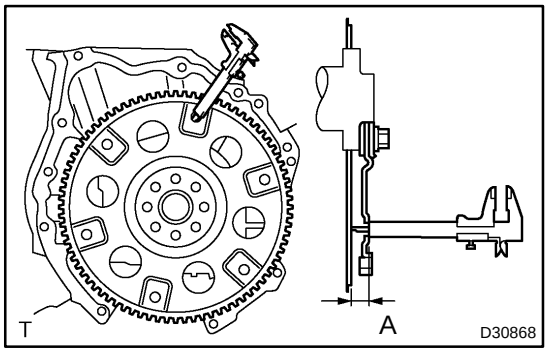

(b) Using vernier calipers, measure the dimension ”A” between the transaxle fitting part the converter fitting part of the drive plate.

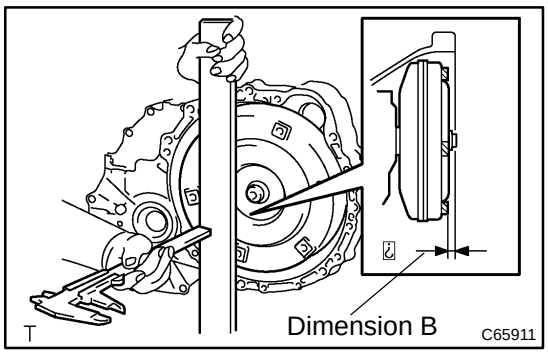

(c) Using vernier calipers and a straight edge, measure the dimension ”B” shown in the illustration and check that ”B” is greater than ”A” measured in (b).
Standard: A + 1 mm or more

NOTICE:
Do not add the thickness of straight edge.

22. INSTALL TRANSFER ASSY (4WD DRIVE TYPE) (See page 31-9)

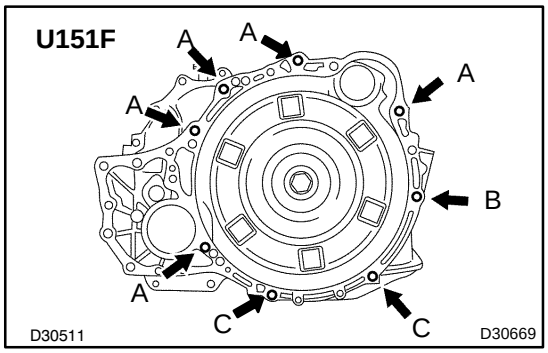

23. INSTALL AUTOMATIC TRANSMISSION W/TRANSFER (4WD DRIVE TYPE)

(a) Install the automatic transaxle w/transfer and 8 bolts to the engine.
Torque:
Bolt A: 64 N·m (650 kgf·cm, 47 ft·lbf)
Bolt B: 46 N·m (470 kgf·cm, 34 ft·lbf)
Bolt C: 37 N·m (377 kgf·cm, 27 ft·lbf)

(b) Apply a few drops of adhesive to each of 2 threads on the tip of the 6 torque converter clutch mounting bolts.
Adhesive: Part No. 08833-00070, THREE BOND 1324 or equivalent

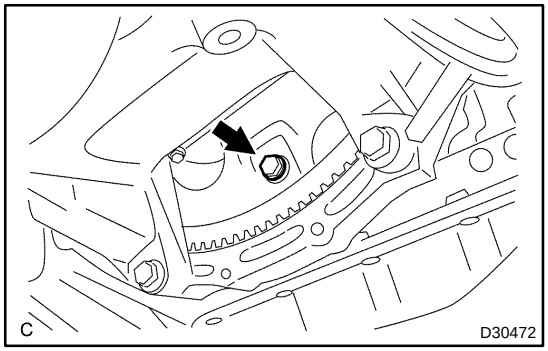

(c) Install the 6 torque converter clutch mounting bolts.
Torque: 48 N·m (489 kgf·cm, 35 ft·lbf)

HINT:
First install green colored bolt and then the 5 bolts.

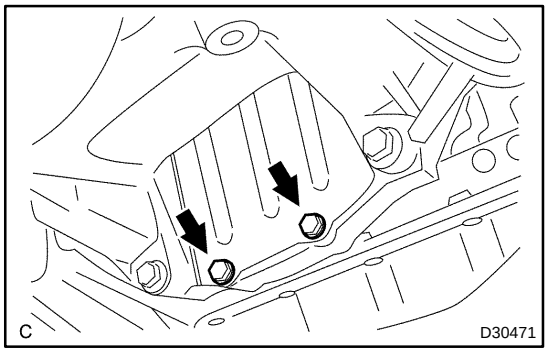

(d) Install the flywheel housing under cover to the automatic transaxle with the 2 bolts.
Torque: 7.8 N·m (80 kgf·cm, 69 in·lbf)

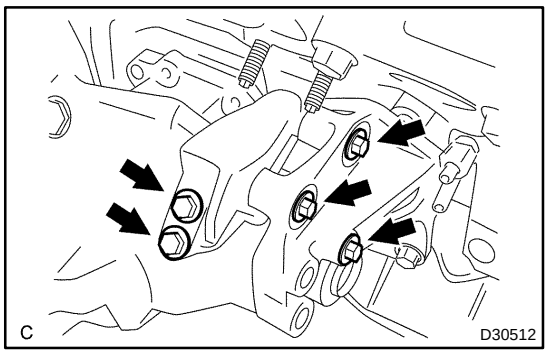

24. INSTALL TRANSFER STIFFENER PLATE RH (4WD DRIVE TYPE)

(a) Install the transfer stiffener plate RH and 5 bolts to the transfer and engine mounting bracket RR.
Torque: 34 N·m (350 kgf·cm, 25 ft·lbf)

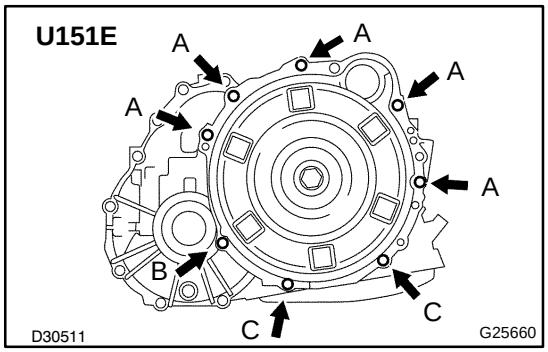

25. INSTALL AUTOMATIC TRANSAXLE ASSY (2WD DRIVE TYPE)

(a) Install the automatic transaxle and 8 bolts to the engine.
Torque:
Bolt A: 64 N·m (652 kgf·cm, 47 ft·lbf)
Bolt B: 46 N·m (469 kgf·cm, 34 ft·lbf)
Bolt C: 37 N·m (377 kgf·cm, 27 ft·lbf)

(b) Apply a few drops of adhesive to each of 2 threads on the tip of the 6 torque converter clutch mounting bolts.
Adhesive: Part No. 08833-00070, THREE BOND 1324 or equivalent

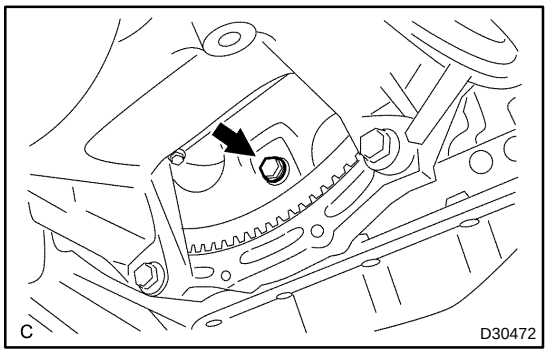

(c) Install the 6 torque converter clutch mounting bolts.
Torque: 48 N·m (489 kgf·cm, 35 ft·lbf)

HINT:
First install black colored bolt and then the 5 bolts.

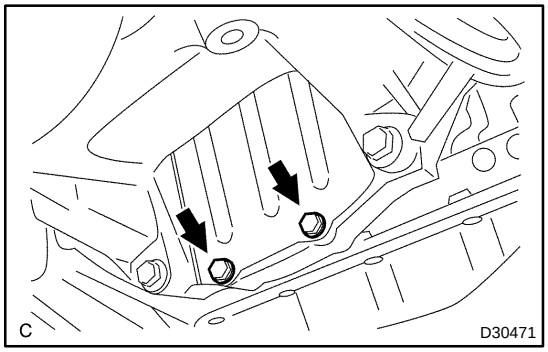

(d) Install the flywheel housing under cover to the automatic transaxle with the 2 bolts.
Torque: 7.8 N·m (80 kgf·cm, 69 in·lbf)

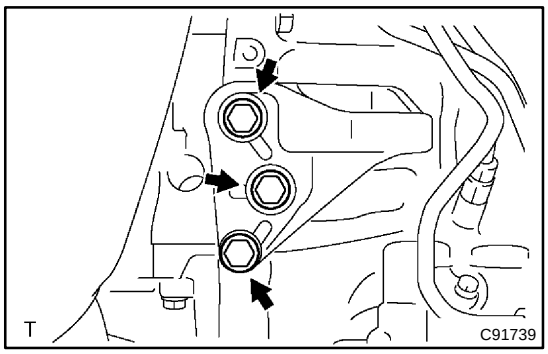

26. INSTALL ENGINE MOUNTING BRACKET FR

(a) Install the engine mounting bracket FR and 3 bolts to the automatic transaxle.
Torque: 64 N·m (653 kgf·cm, 47 ft·lbf)

27. INSTALL TRANSMISSION OIL FILLER TUBE SUB-ASSY

(a) Coat a new O-ring with ATF, and install it to the oil filler tube.

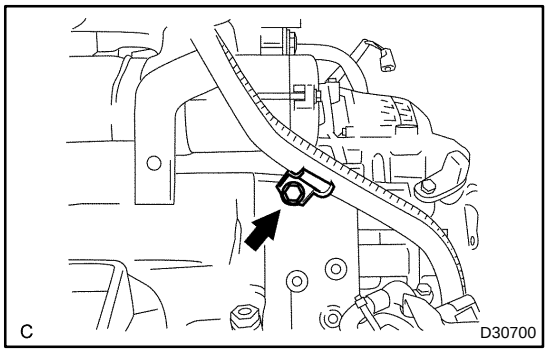

(b) Install the oil filler tube and bolt to the automatic transaxle.
Torque: 5.5 N·m (56 kgf·cm, 49 in.·lbf)

(c) Connect the 2 clamps to the oil filler tube.

(d) Install the ATF level gauge.

28. INSTALL OIL COOLER INLET TUBE NO.1

(a) Temporarily install the oil cooler outlet tube No.1.

(b) Temporarily install the oil cooler inlet tube No.1.

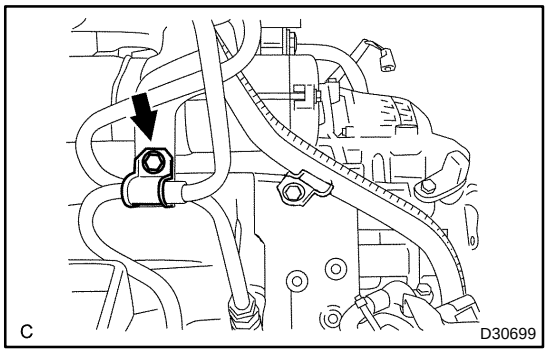

(c) Install the oil cooler tube clamp and bolt.
Torque: 5.5 N·m (56 kgf·cm, 49 in.·lbf)

HINT:
Install the oil cooler tube clamp and bolt so that the oil cooler tube cushion is positioned as illustrated.

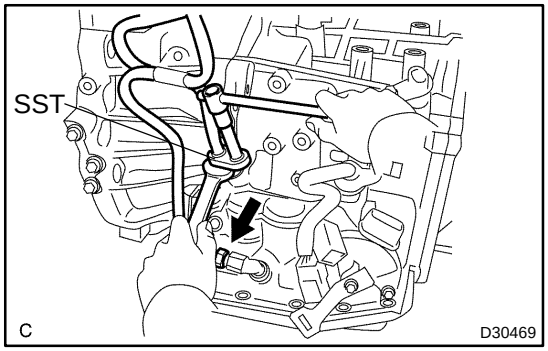

(d) Using SST and spanner, tighten the oil cooler inlet tube No.1.
SST 09023-12701
Torque: 34 N·m (347 kgf·cm, 25 ft·lbf)

29. INSTALL OIL COOLER OUTLET TUBE NO.1

(a) Using SST and spanner, tighten the oil cooler outlet tube No.1.
SST 09023-12701
Torque: 34 N·m (347 kgf·cm, 25 ft·lbf)

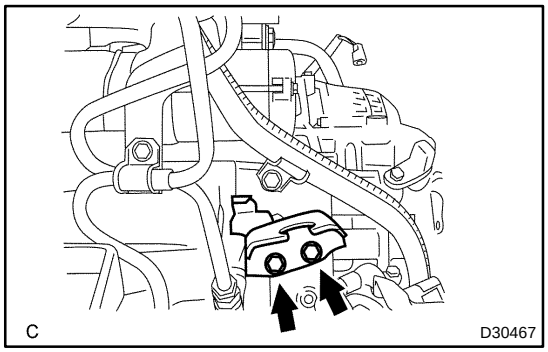

30. INSTALL TRANSMISSION CONTROL CABLE BRACKET NO.1

(a) Install the control cable bracket No.1 and 2 bolts.
Torque: 12 N·m (122 kgf·cm, 9 ft·lbf)

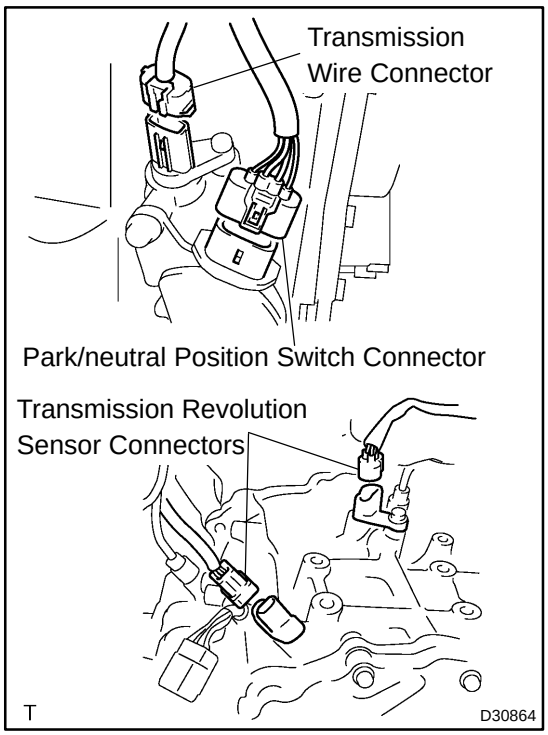

31. CONNECT CONNECTOR

(a) Connect the 2 transmission with connectors.

(b) Connect the park/neutral position switch connector.

(c) Connect the 2 transmission revolution sensor connectors.

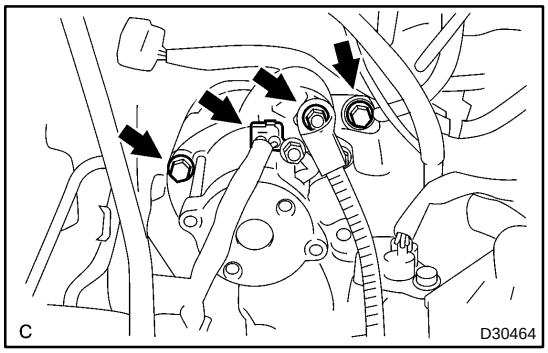

32. INSTALL STARTER ASSY

(a) Install the starter assy and 2 bolts.
Torque: 37 N·m (377 kgf·cm, 27 ft·lbf)

(b) Connect the connecter.

(c) Install the starter wire and nut.
Torque: 9.8 N·m (100 kgf·cm, 87 in.·lbf)

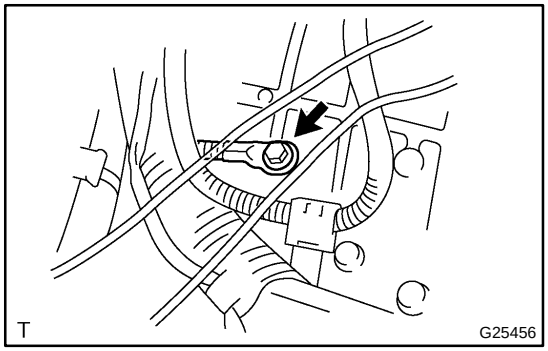

33. INSTALL WIRE HARNESS

(a) Install the wire harness and bolt.
Torque: 13 N·m (133 kgf·cm, 10 ft·lbf)

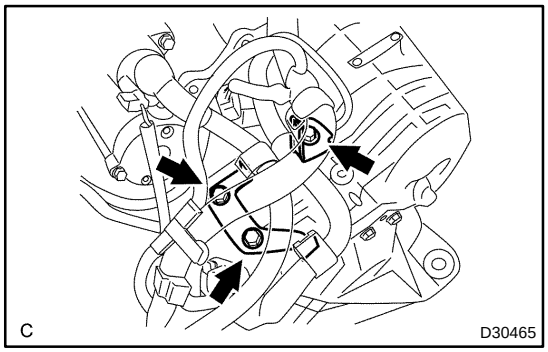

34. INSTALL WIRE HARNESS CLAMP

(a) Install the 3 bolts and 2 clamps.
Torque: 8.4 N·m (86 kgf·cm, 74 in.·lbf)

(b) Connect the wire harnesses to the clamps.

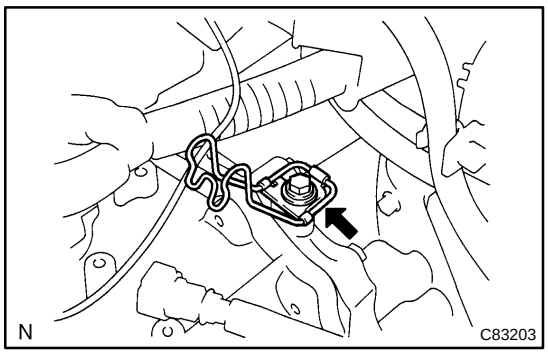

35. INSTALL TRANSMISSION CONTROL CABLE BRACKET NO.2

(a) Using the detent, install the transmission control cable bracket No.2 with the bolt.
Torque: 12 N·m (122 kgf·cm, 9 ft·lbf)

36. INSTALL FRONT DRIVE SHAFT ASSY LH (See page 30-18)
37. INSTALL FRONT DRIVE SHAFT ASSY RH (2WD DRIVE TYPE) (See page 30-18)
38. INSTALL FRONT DRIVE SHAFT ASSY RH (4WD DRIVE TYPE) (See page 30-18)
39. INSTALL ENGINE ASSEMBLY WITH TRANSAXLE (See page 14-33)
40. RESET MEMORY (See page 05-533)

FRONT DIFFERENTIAL OIL SEAL (U151F)

4011H-02

REPLACEMENT

HINT:
When replacing the front differential oil seal (LH) or (RH), perform step 1 to 13 or 14 to 27 respectively.

1. REMOVE FRONT WHEEL
2. REMOVE ENGINE UNDER COVER NO.1
3. DRAIN AUTOMATIC TRANSAXLE FLUID
(a) Remove the drain plug, gasket and drain ATF.
(b) Install a new gasket and drain plug.
Torque: 49 N·m (500 kgf·cm, 36 ft·lbf)
4. REMOVE FRONT DRIVE SHAFT ASSY LH (See page 30-18)

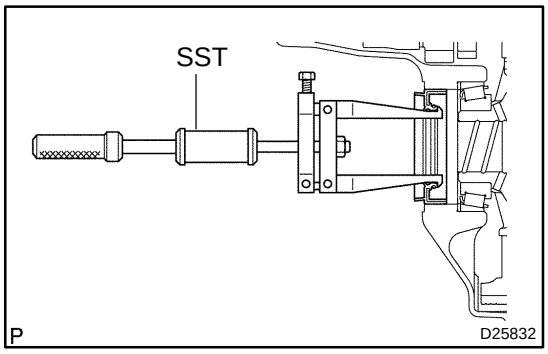

5. REMOVE DIFFERENTIAL SIDE BEARING RETAINER OIL SEAL
(a) Using SST, pull out the oil seal.
SST 09308-00010

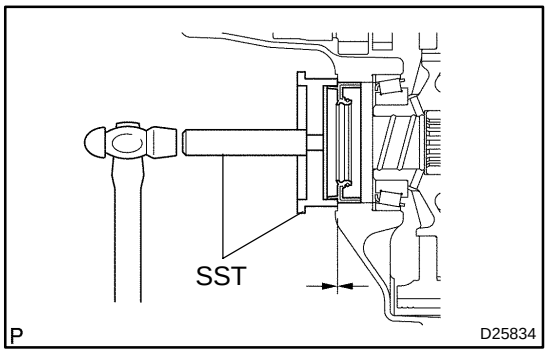

6. INSTALL DIFFERENTIAL SIDE BEARING RETAINER OIL SEAL
(a) Using SST and a hammer, drive in a new oil seal.
SST 09223-15020, 09950-70010 (09951-07150)
Oil seal drive in depth:
0 ± 0.5 mm (0 ± 0.020 in.)
(b) Coat the lip of the oil seal with MP grease.

7. INSTALL FRONT DRIVE SHAFT ASSY LH (See page 30-18)
8. INSTALL ENGINE UNDER COVER NO.1
9. INSTALL FRONT WHEEL
Torque: 103 N·m (1,050 kgf·cm, 76 ft·lbf)
10. ADD AUTOMATIC TRANSAXLE FLUID
11. INSPECT AUTOMATIC TRANSAXLE FLUID (See page 40-2)
12. INSPECT AND ADJUST FRONT WHEEL ALIGNMENT (See page 26-7)
13. CHECK ABS SPEED SENSOR SIGNAL
(a) ABS WITH EBD & BA &TRAC VSC & SYSTEM (See pege 05-435)
14. REMOVE ENGINE ASSEMBLY WITH TRANSAXLE (See page 14-33)
15. REMOVE FRONT DRIVE SHAFT ASSY LH (See page 30-18)
16. REMOVE FRONT DRIVE SHAFT ASSY RH (See page 30-18)
17. REMOVE TRANSFER STIFFENER PLATE RH (See page 40-9)
18. REMOVE AUTOMATIC TRANSMISSION W/TRANSFER (See page 40-9)
19. REMOVE TRANSFER ASSY (See page 31-9)

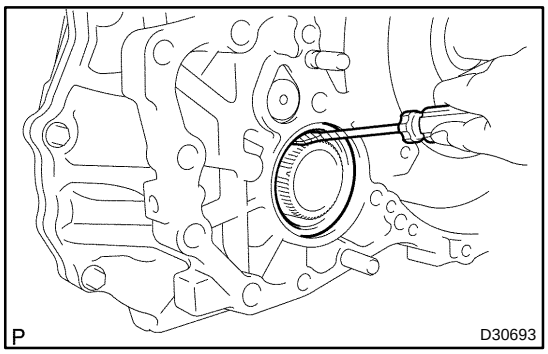

20. REMOVE TRANSAXLE HOUSING OIL SEAL

(a) Using a screw driver with vinyl tape wound around its tip, remove the oil seal.

NOTICE:

Be careful not to damage the housing.

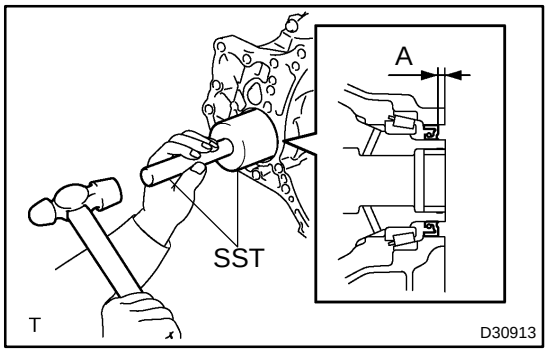

21. INSTALL TRANSAXLE HOUSING OIL SEAL

(a) Using SST and a hammer, drive in a new oil seal.

Oil seal drive in depth:

6.0 ± 0.5 mm (0.236 ± 0.020 in.)

(b) Coat the lip of the oil seal with MP grease.

SST 09649-17010, 09950-70010 (09951-07200)

22. INSTALL TRANSFER ASSY (See page 31-9)

23. INSTALL AUTOMATIC TRANSMISSION W/TRANSFER (See page 40-9)

24. INSTALL TRANSFER STIFFENER PLATE RH (See page 40-9)

25. INSTALL FRONT DRIVE SHAFT ASSY RH (See page 30-18)

26. INSTALL FRONT DRIVE SHAFT ASSY LH (See page 30-18)

27. INSTALL ENGINE ASSEMBLY WITH TRANSAXLE (See page 14-33)

SST 09670-00010

TRANSMISSION REVOLUTION SENSOR (U151E/U151F)

4011F-01

REPLACEMENT

1. **REMOVE BATTERY**
2. **REMOVE AIR CLEANER ASSY**
3. **REMOVE AIR CLEANER HOSE NO.1**
4. **REMOVE AIR CLEANER INLET NO.2**
5. **REMOVE AIR CLEANER BRACKET**
6. **REMOVE AIR CLEANER INLET NO.1**

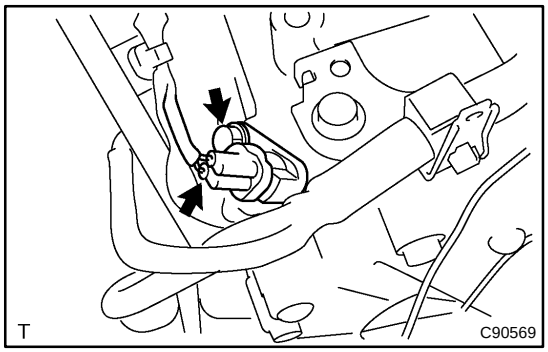

7. REMOVE TRANSMISSION REVOLUTION SENSOR (NT SENSOR)

(a) Disconnect the transmission revolution sensor connector.

(b) Remove the bolt and transmission revolution sensor.

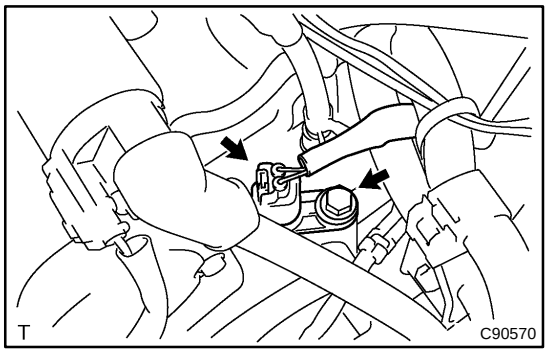

8. REMOVE TRANSMISSION REVOLUTION SENSOR (NC SENSOR)

(a) Disconnect the transmission revolution sensor connector.

(b) Remove the bolt and transmission revolution sensor.

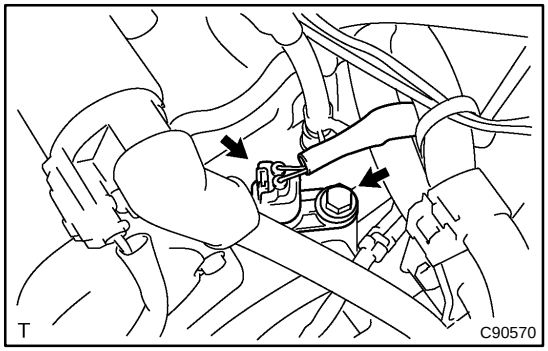

9. INSTALL TRANSMISSION REVOLUTION SENSOR (NC SENSOR)

(a) Coat an O-ring with ATF.

(b) Install the transmission revolution sensor with the bolt.
Torque: 11 N·m (115 kgf·cm, 8 ft·lbf)

HINT:
Make sure of the manufacturer's name.

(c) Connect the transmission revolution sensor connector.

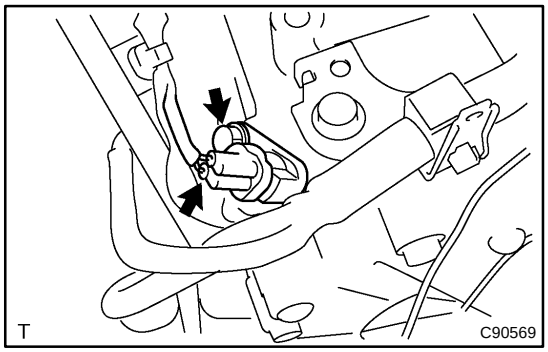

10. INSTALL TRANSMISSION REVOLUTION SENSOR (NT SENSOR)

(a) Coat an O-ring with ATF.

(b) Install the transmission revolution sensor with the bolt.
Torque: 11 N·m (115 kgf·cm, 8 ft·lbf)

HINT:
Make sure of the manufacturer's name.

(c) Connect the transmission revolution sensor connector.

11. INSTALL AIR CLEANER INLET NO.1

12. INSTALL AIR CLEANER BRACKET

13. INSTALL AIR CLEANER INLET NO.2

14. INSTALL AIR CLEANER HOSE NO.1

15. INSTALL AIR CLEANER ASSY

16. INSTALL BATTERY

17. CHECK ABS SPEED SENSOR SIGNAL

(a) ABS WITH EBD SYSTEM (See pege 05-386)

(b) ABS WITH EBD & BA &TRAC VSC & SYSTEM (See pege 05-435)

TRANSMISSION CONTROL CABLE ASSY (ATM)

4011D-02

REPLACEMENT

1. **DISCONNECT BATTERY NEGATIVE TERMINAL**
2. **REMOVE FRONT DOOR SCUFF PLATE LH (See page 71-10)**
3. **REMOVE FRONT DOOR SCUFF PLATE RH (See page 71-10)**
4. **REMOVE COWL SIDE TRIM BOARD LH (See page 71-10)**
5. **REMOVE COWL SIDE TRIM BOARD RH (See page 71-10)**
6. **REMOVE INSTRUMENT PANEL FINISH PANEL SUB-ASSY LOWER LH (See page 71-10)**
7. **REMOVE GLOVE COMPARTMENT DOOR STOPPER SUB-ASSY (See page 71-10)**
8. **REMOVE GLOVE COMPARTMENT DOOR ASSY (See page 71-10)**
9. **REMOVE FLOOR CARPET COVER CENTER LH (See page 71-10)**
10. **REMOVE FLOOR CARPET COVER CENTER RH (See page 71-10)**
11. **REMOVE INSTRUMENT CLUSTER FINISH PANEL CENTER NO.1 (See page 71-10)**
12. **REMOVE INSTRUMENT CLUSTER FINISH PANEL CENTER NO.2 (See page 71-10)**
13. **REMOVE SHIFT LEVER KNOB SUB-ASSY (See page 71-10)**
14. **REMOVE POSITION INDICATOR HOUSING ASSY (See page 71-10)**
15. **REMOVE INSTRUMENT CLUSTER FINISH PANEL ASSY CENTER (See page 71-10)**

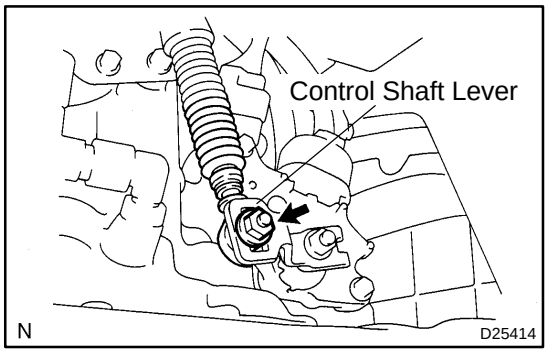

16. REMOVE TRANSMISSION CONTROL CABLE ASSY

(a) Remove the nut from the control shaft lever.

(b) Disconnect the transmission control cable assy from the control shaft lever.

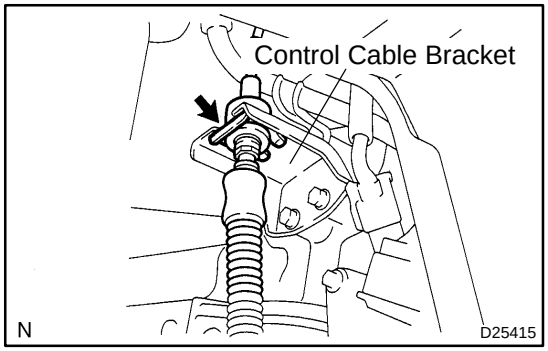

(c) Remove the clip and disconnect the transmission control cable assy from the control cable bracket.

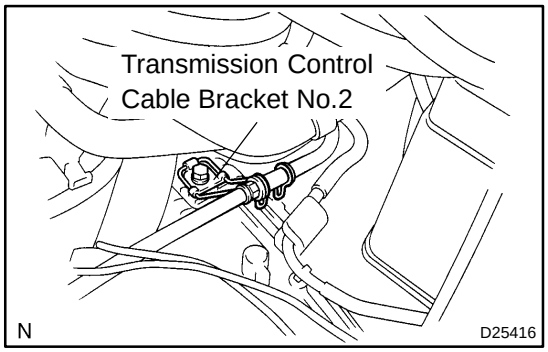

(d) Disconnect the transmission control cable assy from the transmission control cable bracket No.2.

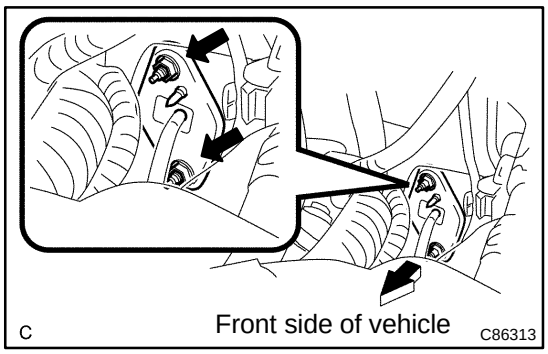

(e) Remove the 2 nuts and disconnect the transmission control cable assy from the vehicle.

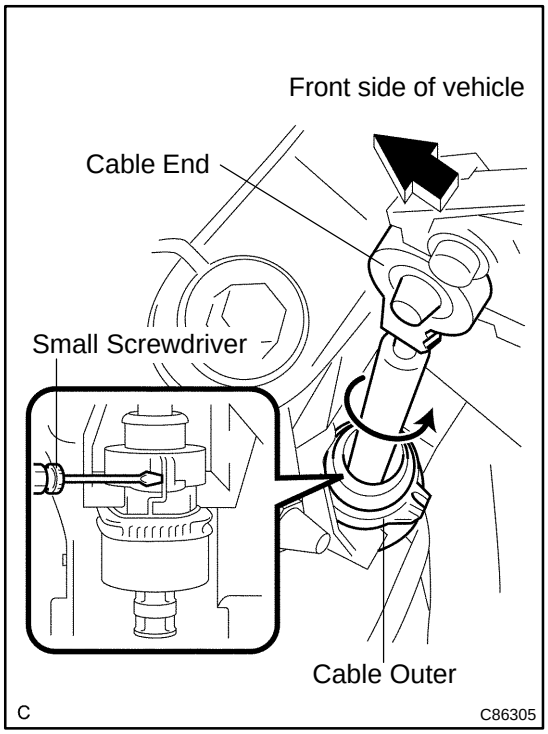

(f) Using a screwdriver, disconnect the cable end from the shift lever assy.

(g) Using a small screwdriver, disconnect the cable outer of transmission control cable assy from the shift lever assy.

(h) Pull out the control cable from the vehicle.

17. CONNECT TRANSMISSION CONTROL CABLE ASSY

(a) Pull in the control cable to the body.

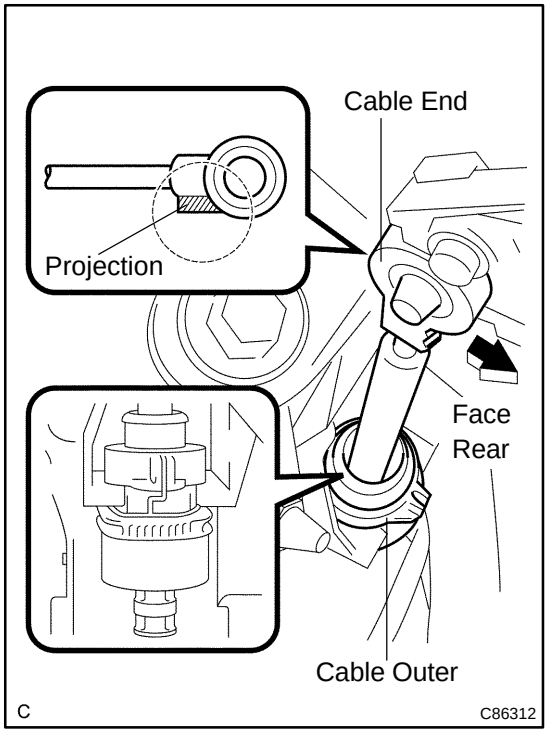

(b) Install the cable end, as shown in the illustration.

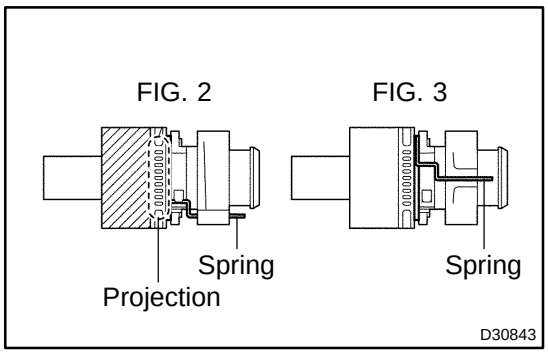

(c) When installing the transmission control cable assy on the shift lever plate, place the projection of the shift cable downward to fit in the groove of the shift lever plate (FIG. 2).
Confirm that the spring in the shift cable outer has moved to the position (FIG. 3) shown in the illustration.
Confirm that the shift cable is installed on the shift lever plate properly.

NOTICE:

- **To prevent torsion of the inner cable, the projection on the eye end should face rear.**
- **Push the cable end to the bottom of the pin.**

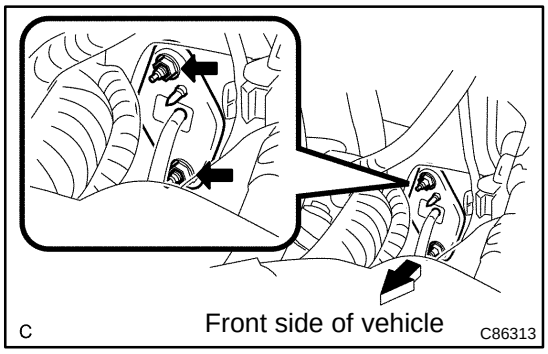

(d) Install the transmission control cable assy and 2 nuts.
Torque: 12 N·m (122 kgf·cm, 9 ft·lbf)

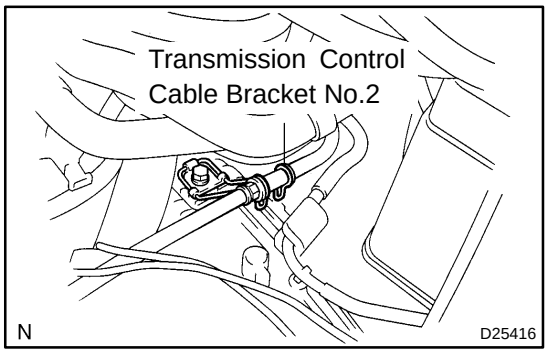

(e) Connect the transmission control cable assy to the transmission control cable bracket No.2.

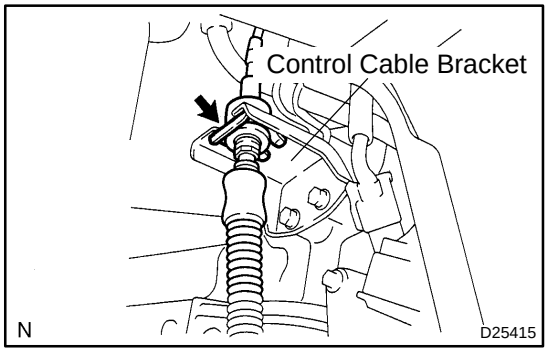

(f) Temporarily install the transmission control cable assy to the control shaft lever with the nut.

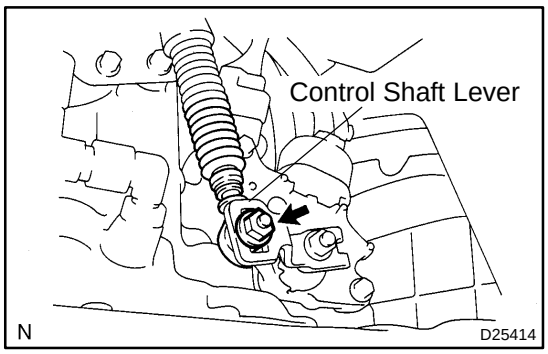

(g) Install the transmission control cable assy and clip to the bracket.

18. INSTALL INSTRUMENT CLUSTER FINISH PANEL ASSY CENTER (See page 71-10)
19. INSTALL POSITION INDICATOR HOUSING ASSY (See page 40-38)
20. INSTALL SHIFT LEVER KNOB SUB-ASSY (See page 40-38)
21. ADJUST SHIFT LEVER POSITION (See page 40-44)
22. INSPECT SHIFT LEVER POSITION (See page 40-44)