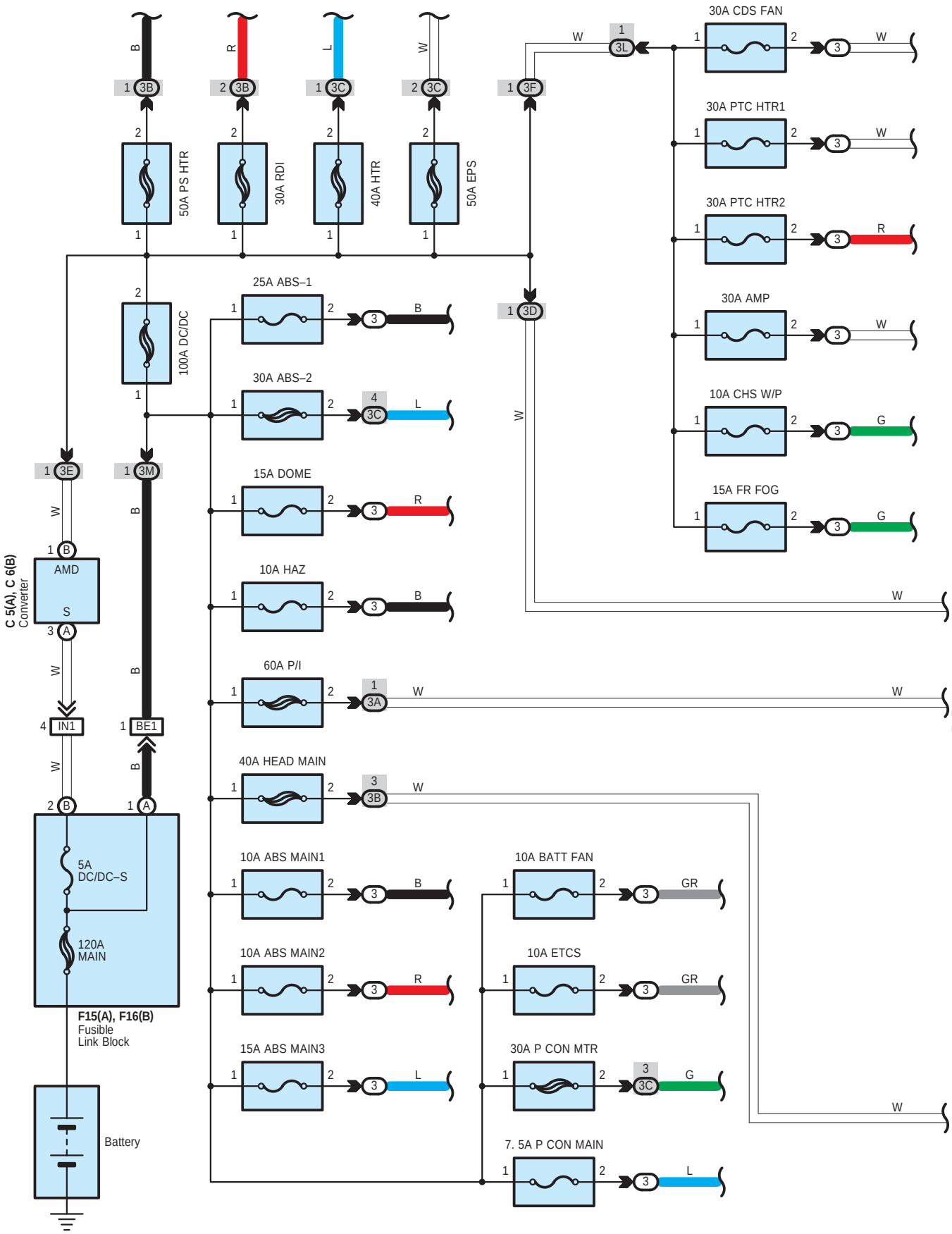

cardiagn.com

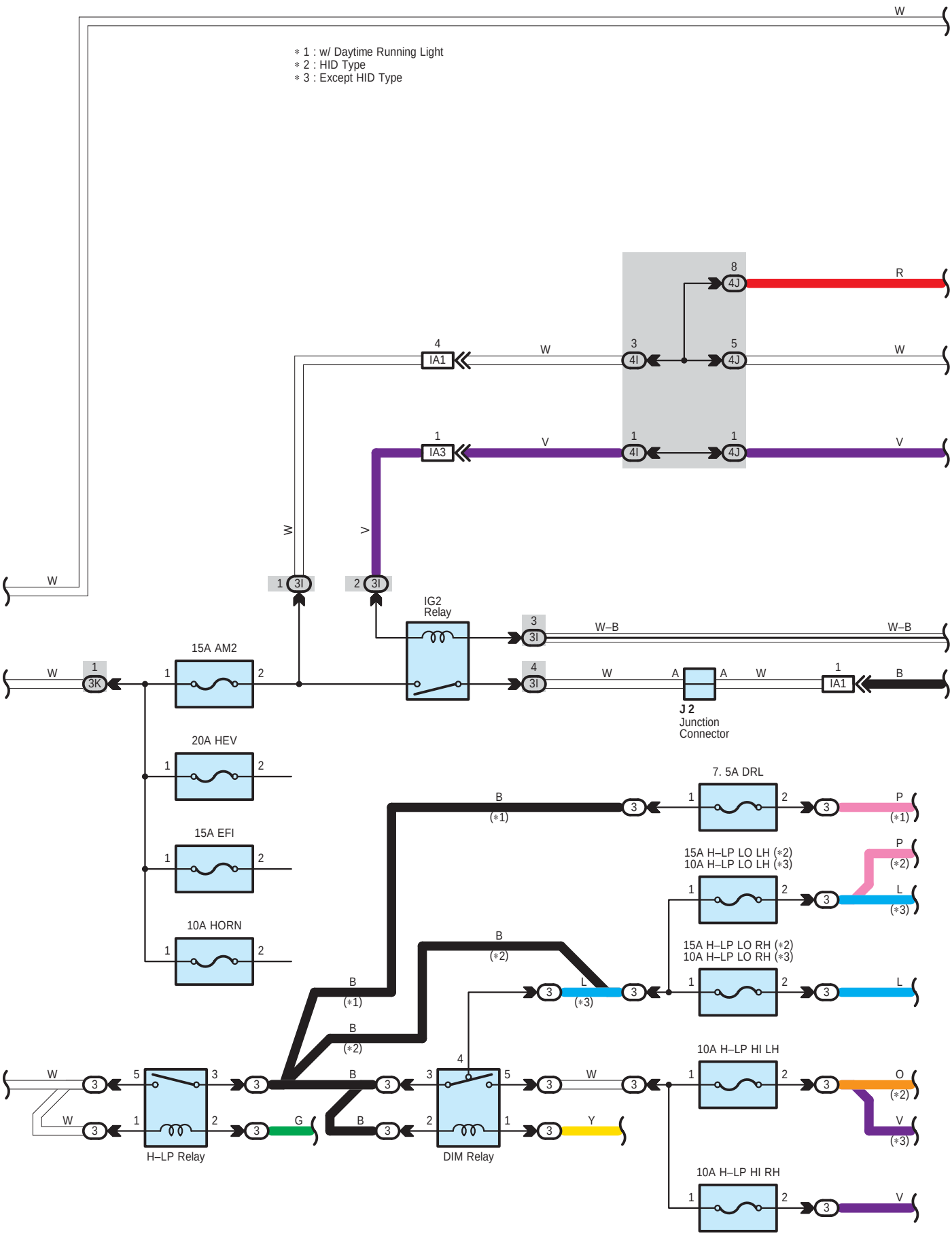

cardiagn.com

Power Source

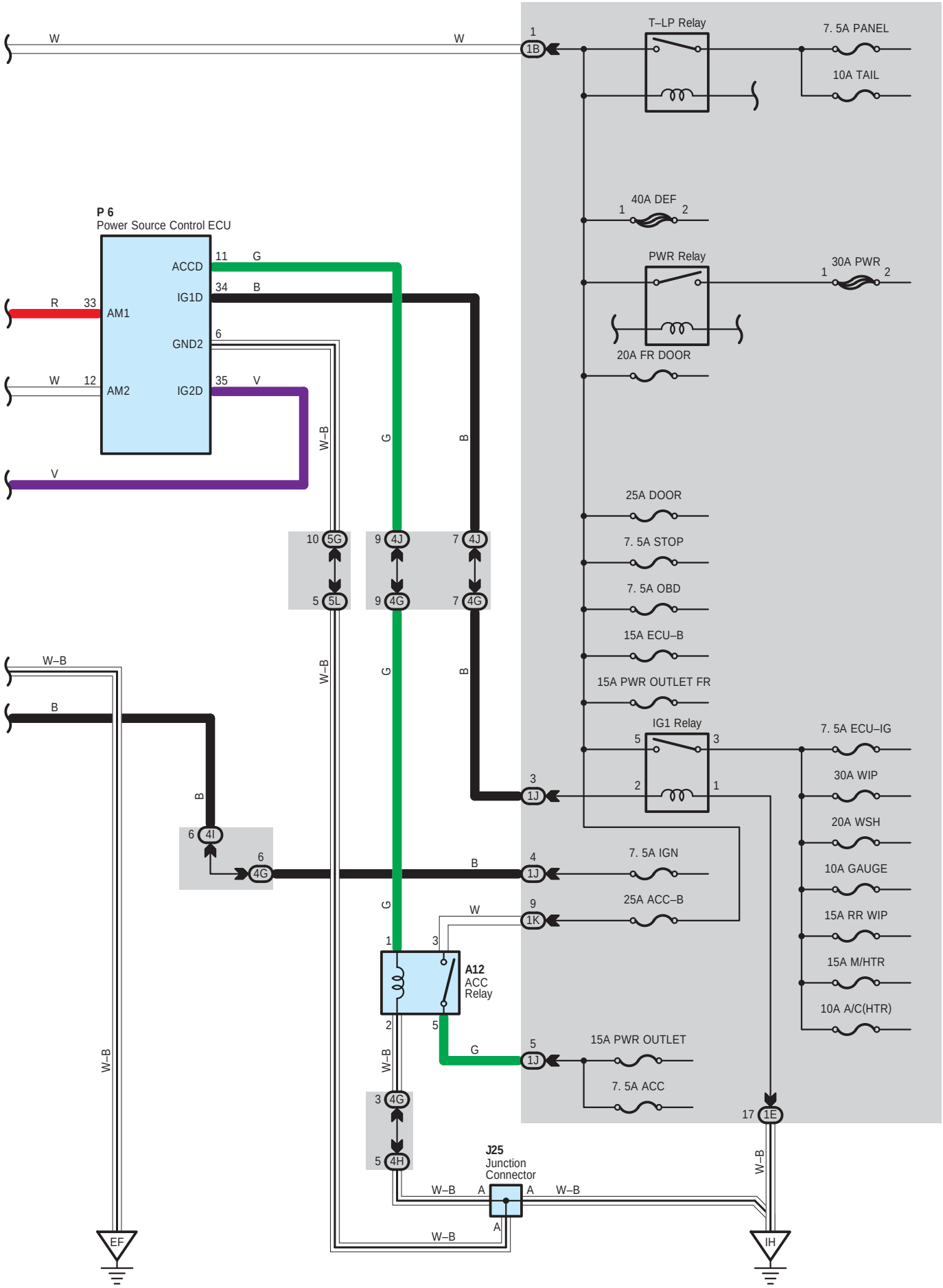

cardiagn.com

: Parts Location

Code		See Page	Code		See Page	Code	See Page
A12		48	F15	A	28, 53	J25	50
C5	A	46	F16	B	28, 53	P6	51
C6	B	46	J2		47		

: Relay Blocks

Code	See Page	Relay Blocks (Relay Block Location)
3	22	Engine Room R/B (Engine Compartment Left)

: Junction Block and Wire Harness Connector

Code	See Page	Junction Block and Wire Harness (Connector Location)
1B	30	Engine Room Main Wire and Driver Side J/B (Lower Finish Panel)
1E	30	Instrument Panel Wire and Driver Side J/B (Lower Finish Panel)
1J		
1K	31	
3A	23	Engine Room Main Wire and Engine Room J/B (Engine Compartment Left)
3B		
3C		
3D		
3E		
3F		
3I	24	
3K		
3L	22	
3M	23	Frame Wire and Engine Room J/B (Engine Compartment Left)
4G	38	Instrument Panel Wire and Center Connector No.1 (Behind the Combination Meter)
4H		
4I		
4J		
5G	42	Instrument Panel Wire and Center Connector No.2 (Instrument Panel Brace RH)
5L		

: Connector Joining Wire Harness and Wire Harness

Code	See Page	Joining Wire Harness and Wire Harness (Connector Location)
IA1	58	Engine Room Main Wire and Instrument Panel Wire (Upper Parts of Front Body Pillar LH)
IA3		
IN1	59	Floor No.2 Wire and Engine Room Main Wire (Right Kick Panel)
BE1	60	Frame Wire and Floor No.2 Wire (Front Side of Left Quarter Panel)

: Ground Points

Code	See Page	Ground Points Location
EF	56	Left Side of the Suspension Tower
IH	58	Cowl Side Panel LH

cardiagn.com

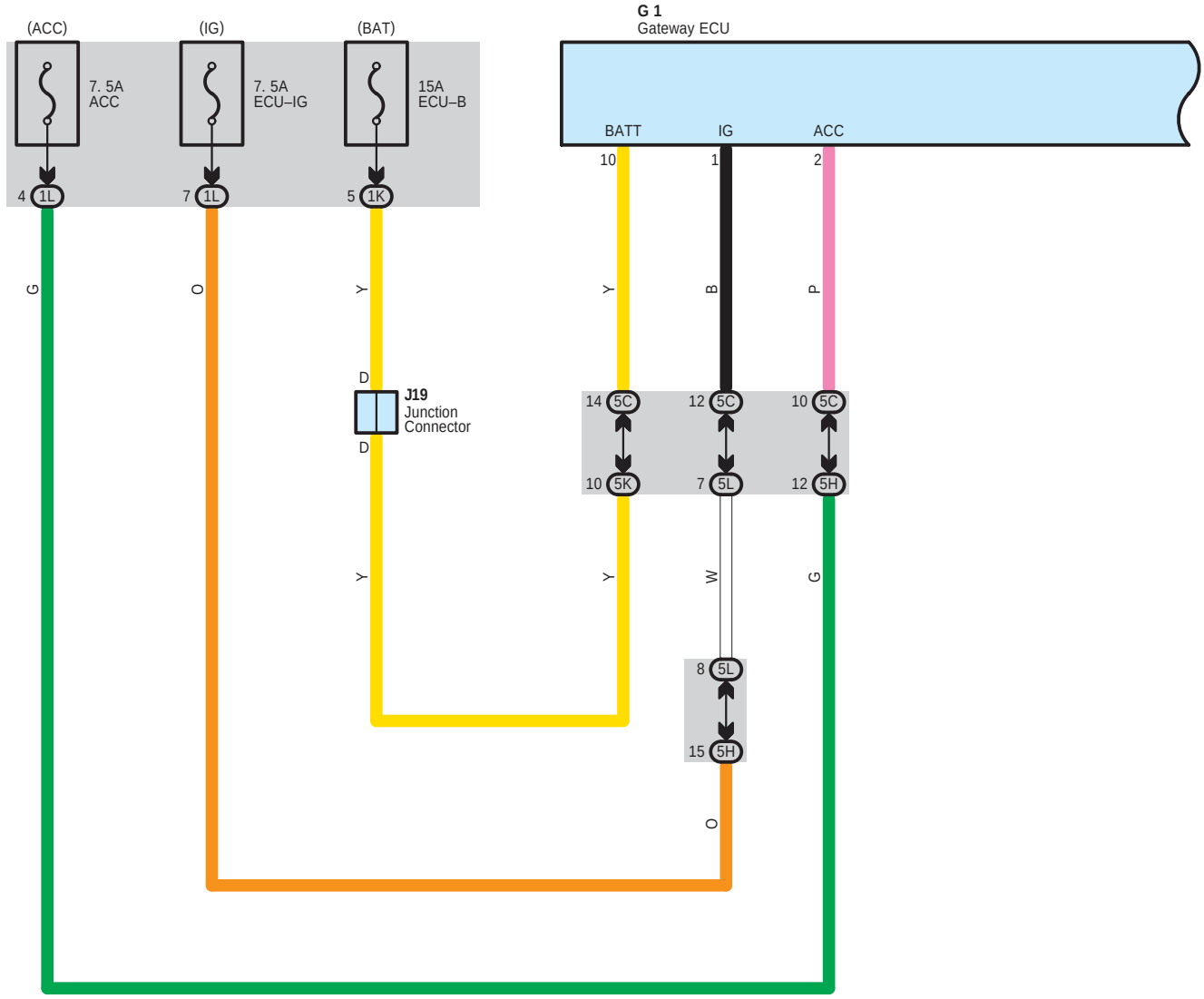

cardiagn.com

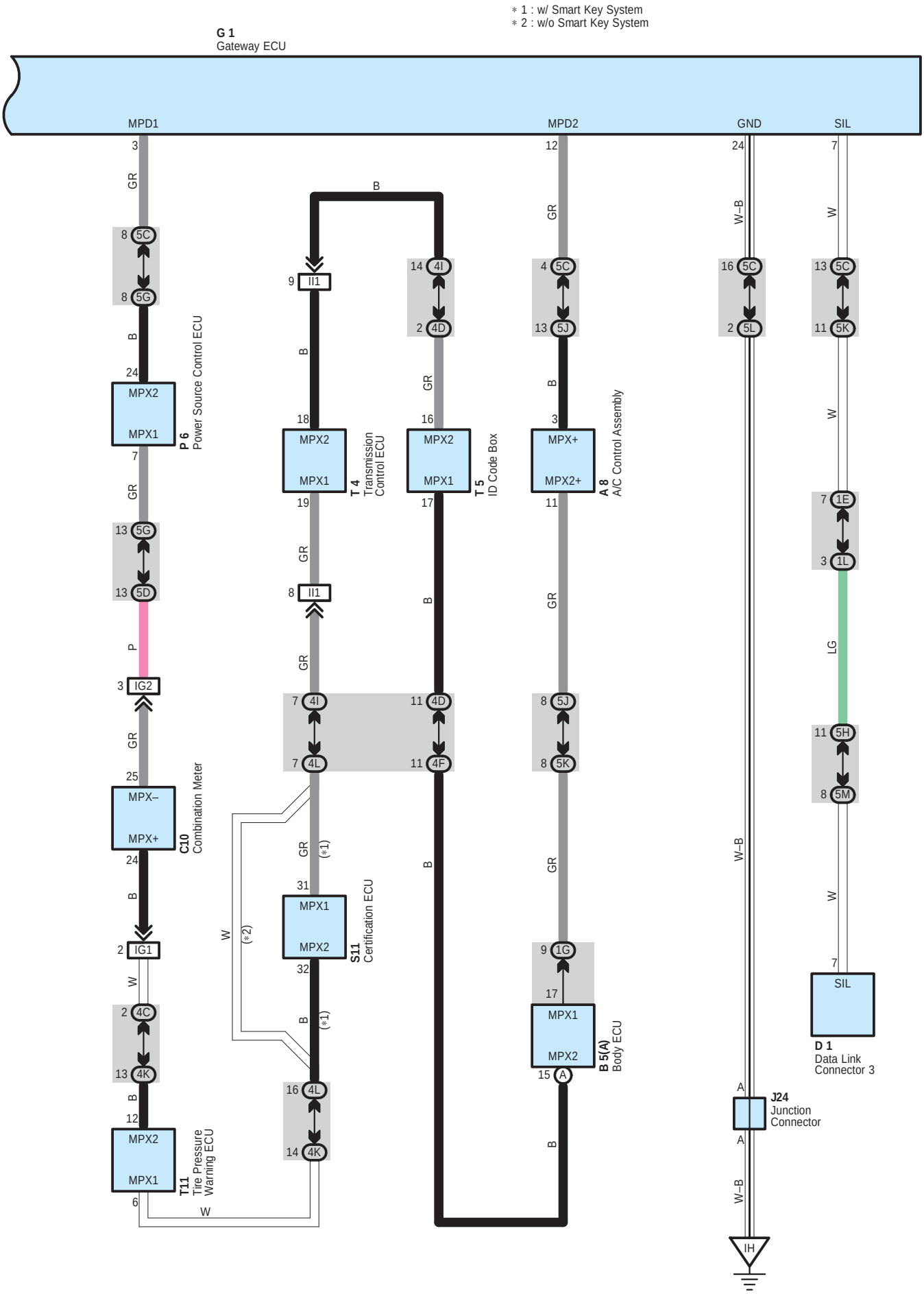

cardiagn.com

System Outline

BEAN consists of body electrical systems such as body ECU, A/C control assembly, power source control ECU, combination meter, tire pressure warning ECU, certification ECU∗, transmission control ECU, ID code box and gateway ECU. Gateway ECU has communication circuit to correspond with different types of communication data. Different types of communication data can be shared among communication parts after it goes through gateway ECU. Vehicle information is input to body ECU at an assembling plant as a representative ECU which delivers the information to other ECUs through multiplex communication.

∗ Optional equipment

This system is working for the following systems:

∗ ABS
∗ Air Conditioning
∗ Audio System
∗ Combination Meter
∗ Cruise Control
∗ Engine Control
∗ EPS
∗ Headlight
∗ Hybrid Vehicle Immobiliser System
∗ Illumination
∗ Interior Light
∗ Key Reminder
∗ Luggage Compartment Door Opener
∗ Mirror Heater
∗ Multi–Display
∗ Push Button Start System
∗ Rear Window Defogger
∗ Shift Control System
∗ Smart Key System
∗ Taillight
∗ Tire Pressure Warning System
∗ TOYOTA Hybrid System
∗ TRAC
∗ VSC

○ **: Parts Location**

Code	See Page	Code	See Page	Code	See Page
A8	48	G1	49	S11	51
B5 A	48	J19	50	T4	51
C10	49	J24	50	T5	51
D1	49	P6	51	T11	51

cardiagn.com

: **Junction Block and Wire Harness Connector**

Code	See Page	Junction Block and Wire Harness (Connector Location)
1E	30	Instrument Panel Wire and Driver Side J/B (Lower Finish Panel)
1G		
1K	31	
1L		
4C	38	Instrument Panel Wire and Center Connector No.1 (Behind the Combination Meter)
4D		
4F		
4I		
4K		
4L		
5C	42	Instrument Panel Wire and Center Connector No.2 (Instrument Panel Brace RH)
5D		
5G		
5H		
5J		
5K		
5L		
5M		

: **Connector Joining Wire Harness and Wire Harness**

Code	See Page	Joining Wire Harness and Wire Harness (Connector Location)
IG1	59	Instrument Panel Wire and Instrument Panel No.2 Wire (Behind the Combination Meter)
IG2		
II1	59	Engine Wire and Instrument Panel Wire (Behind the Glove Box)

: **Ground Points**

Code	See Page	Ground Points Location
IH	58	Cowl Side Panel LH

cardiagn.com

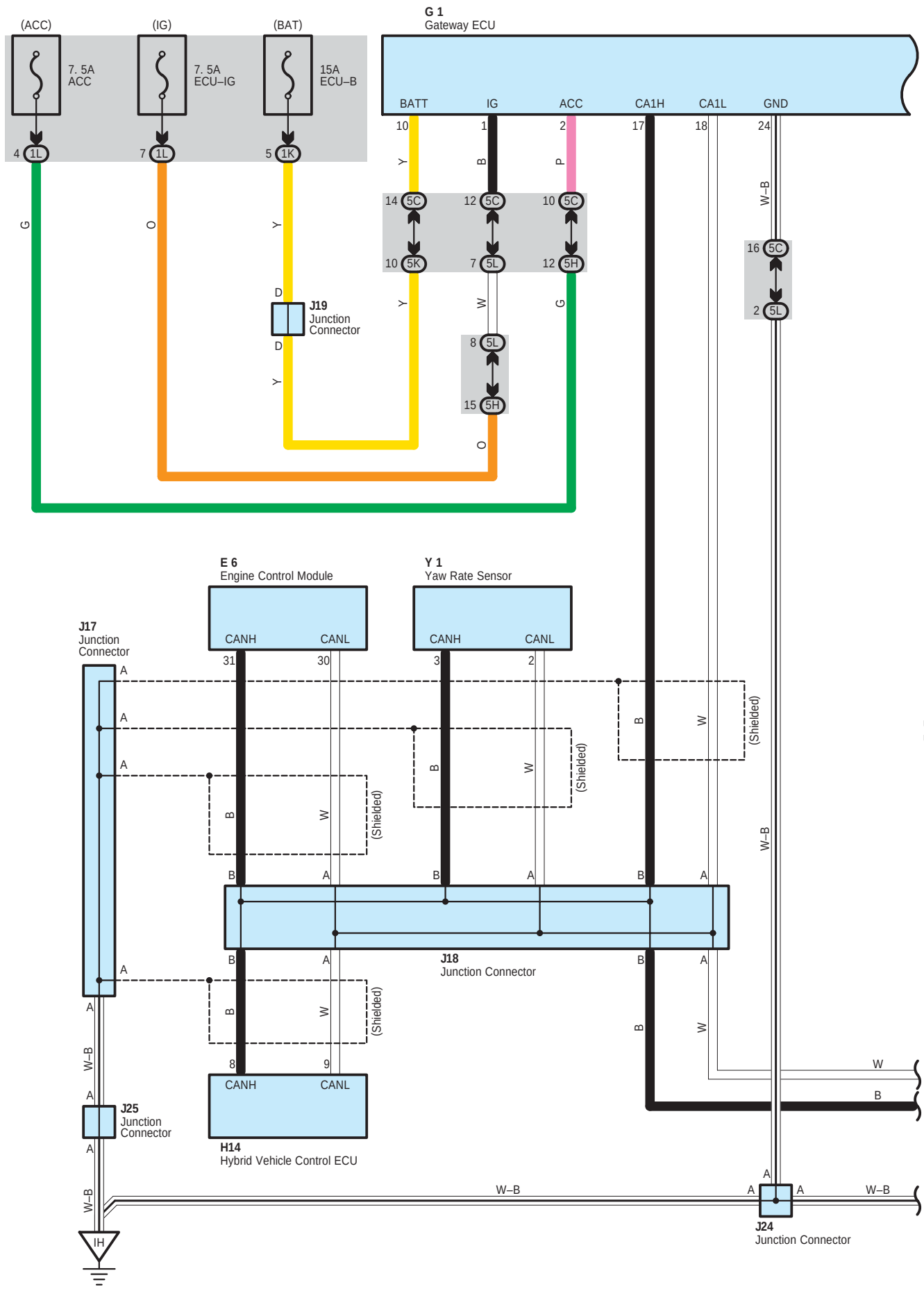

cardiagn.com

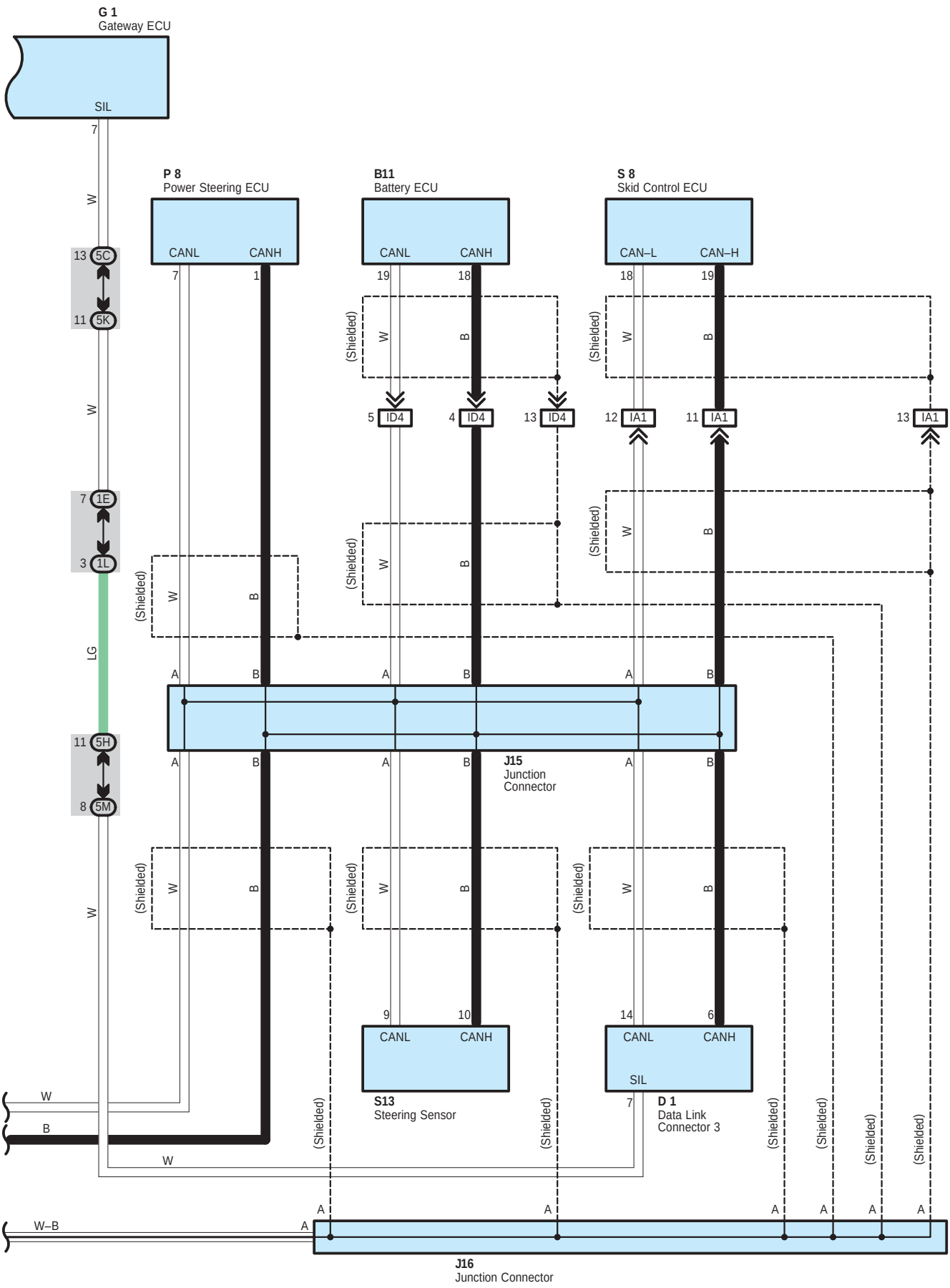

cardiagn.com

System Outline

CAN has two lines as a pair which make communication with operating voltage. CAN has excellent data speed and error detecting capacity. It consists of vehicle control systems such as hybrid vehicle control ECU, engine control module, yaw rate sensor, battery ECU, power steering ECU, skid control ECU, steering sensor, data link connector 3 and gateway ECU. Gateway ECU has communication circuit to correspond with different types of communication data. Different types of communication data can be shared among communication parts after it goes through gateway ECU.

This system is working for the following systems:
* ABS
* Air Conditioning
* Audio System
* Back–Up Light
* Combination Meter
* Cruise Control
* Engine Control
* EPS
* Headlight
* Hybrid Vehicle Immobiliser System
* Multi–Display
* Push Button Start System
* Shift Control System
* Smart Key System
* Theft Deterrent
* TOYOTA Hybrid System
* TRAC
* VSC

: Parts Location

Code	See Page	Code	See Page	Code	See Page
B11	52	J16	50	P8	51
D1	49	J17	50	S8	51
E6	49	J18	50	S13	51
G1	49	J19	50	Y1	51
H14	49	J24	50		
J15	50	J25	50		

: Junction Block and Wire Harness Connector

Code	See Page	Junction Block and Wire Harness (Connector Location)
1E	30	Instrument Panel Wire and Driver Side J/B (Lower Finish Panel)
1K	31	
1L		
5C	42	Instrument Panel Wire and Center Connector No.2 (Instrument Panel Brace RH)
5H		
5K		
5L		
5M		

: Connector Joining Wire Harness and Wire Harness

Code	See Page	Joining Wire Harness and Wire Harness (Connector Location)
IA1	58	Engine Room Main Wire and Instrument Panel Wire (Upper Parts of Front Body Pillar LH)
ID4	58	Instrument Panel Wire and Floor Wire (Left Kick Panel)

: Ground Points

Code	See Page	Ground Points Location
IH	58	Cowl Side Panel LH

cardiagn.com

cardiagn.com

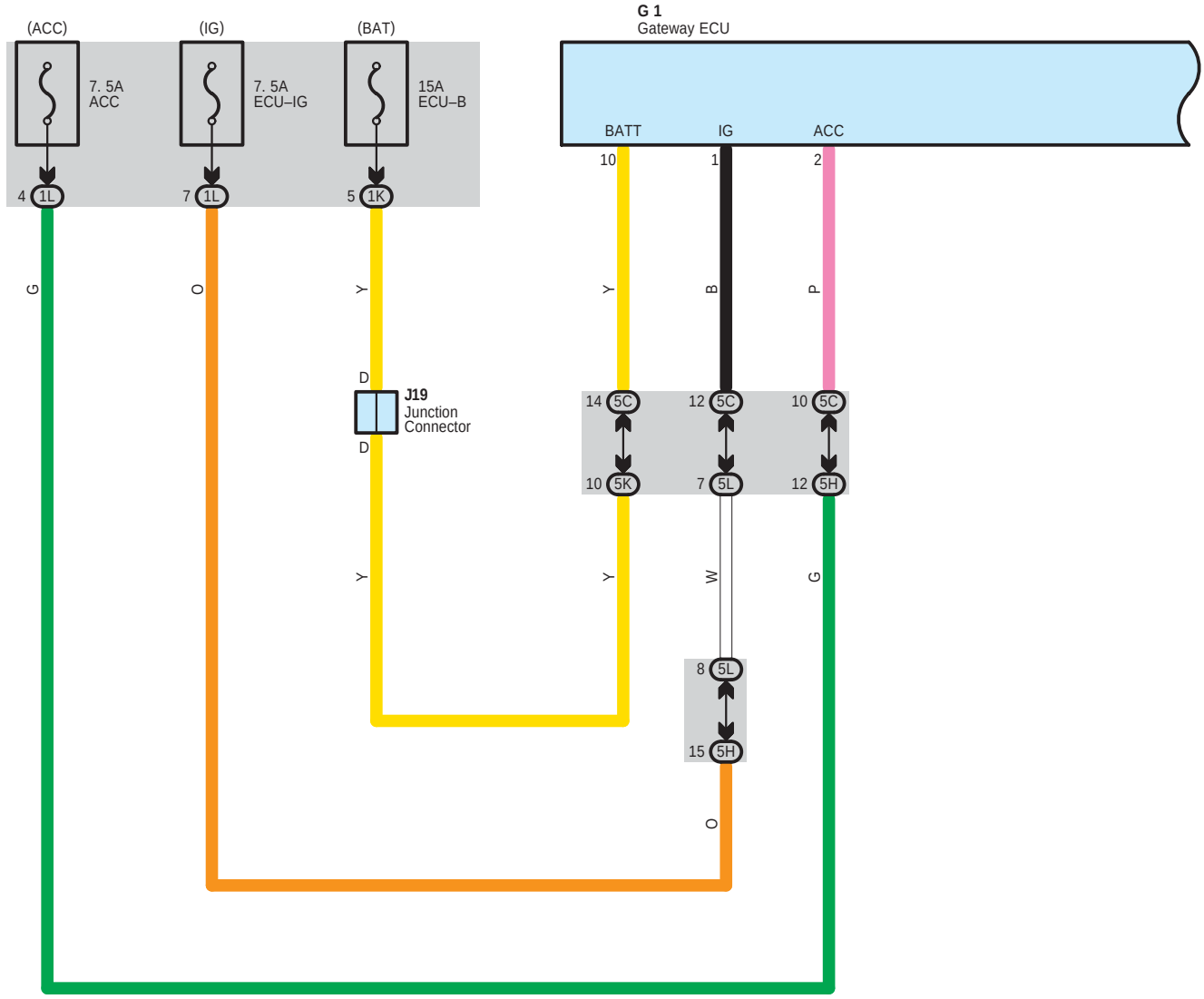

∗ 1 : w/ Navigation System
∗ 2 : w/ Separate Amplifier
∗ 3 : w/ Television Camera
∗ 4 : w/o Television Camera

cardiagn.com

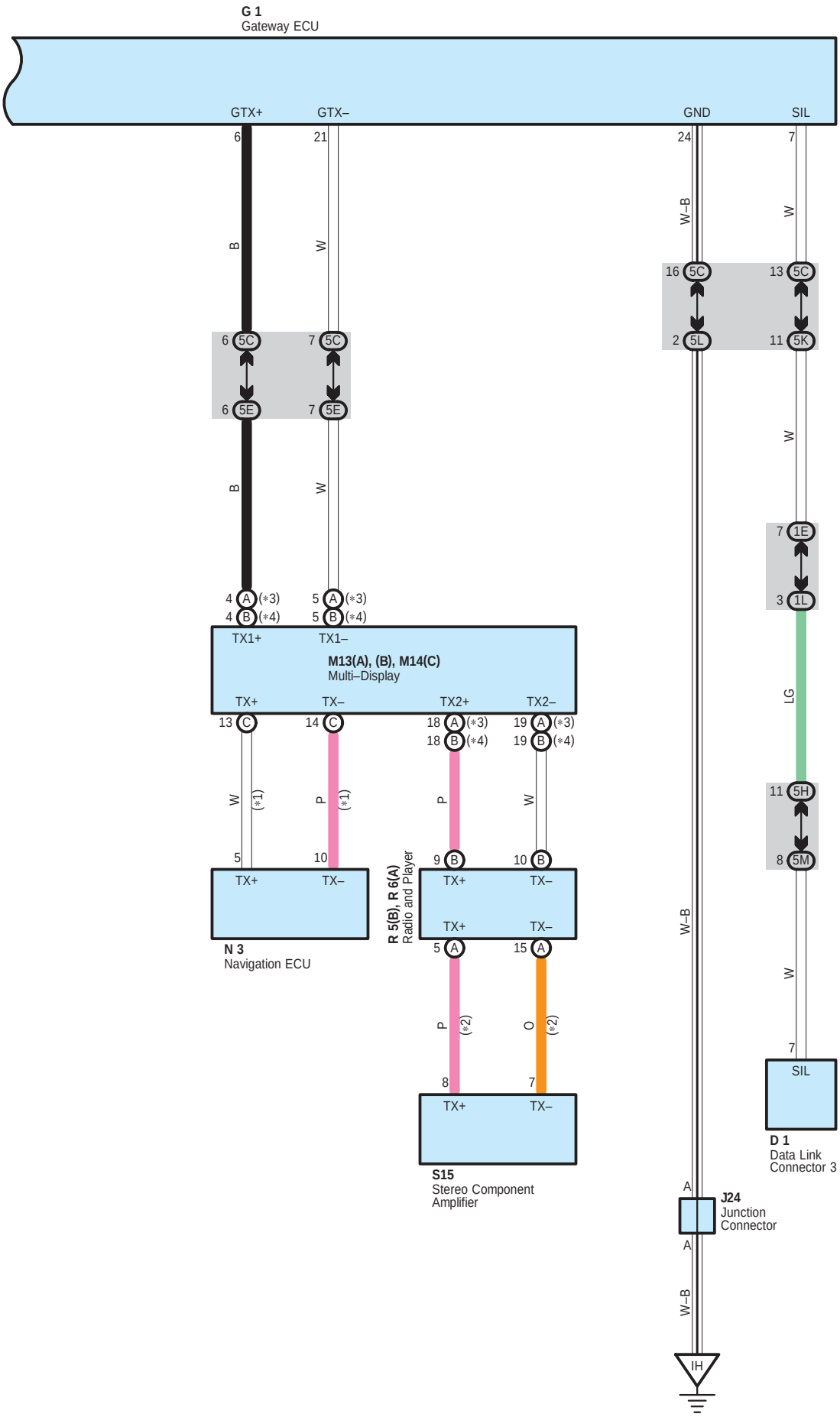

cardiagn.com

System Outline

AVC–LAN consists of audio visual systems such as multi–display, navigation ECU∗, radio and player, stereo component amplifier∗ and gateway ECU. Gateway ECU has communication circuit to correspond with different types of communication data. Different types of communication data can be shared among communication parts after it goes through gateway ECU.

∗ Optional equipment

This system is working for the following systems:

∗ ABS
∗ Air Conditioning
∗ Audio System
∗ Combination Meter
∗ Engine Control
∗ EPS
∗ Hybrid Vehicle Immobiliser System
∗ Mirror Heater
∗ Multi–Display
∗ Push Button Start System
∗ Rear Wiper and Washer
∗ Shift Control System
∗ TOYOTA Hybrid System
∗ TRAC
∗ VSC

: Parts Location

Code	See Page	Code		See Page	Code		See Page
D1	49	M13	A	50	R5	B	51
G1	49		B	50	R6	A	51
J19	50	M14	C	50	S15		51
J24	50	N3		50			

: Junction Block and Wire Harness Connector

Code	See Page	Junction Block and Wire Harness (Connector Location)
1E	30	Instrument Panel Wire and Driver Side J/B (Lower Finish Panel)
1K	31	
1L		
5C	42	Instrument Panel Wire and Center Connector No.2 (Instrument Panel Brace RH)
5E		
5H		
5K		
5L		
5M		

: Ground Points

Code	See Page	Ground Points Location
IH	58	Cowl Side Panel LH

cardiagn.com

cardiagn.com

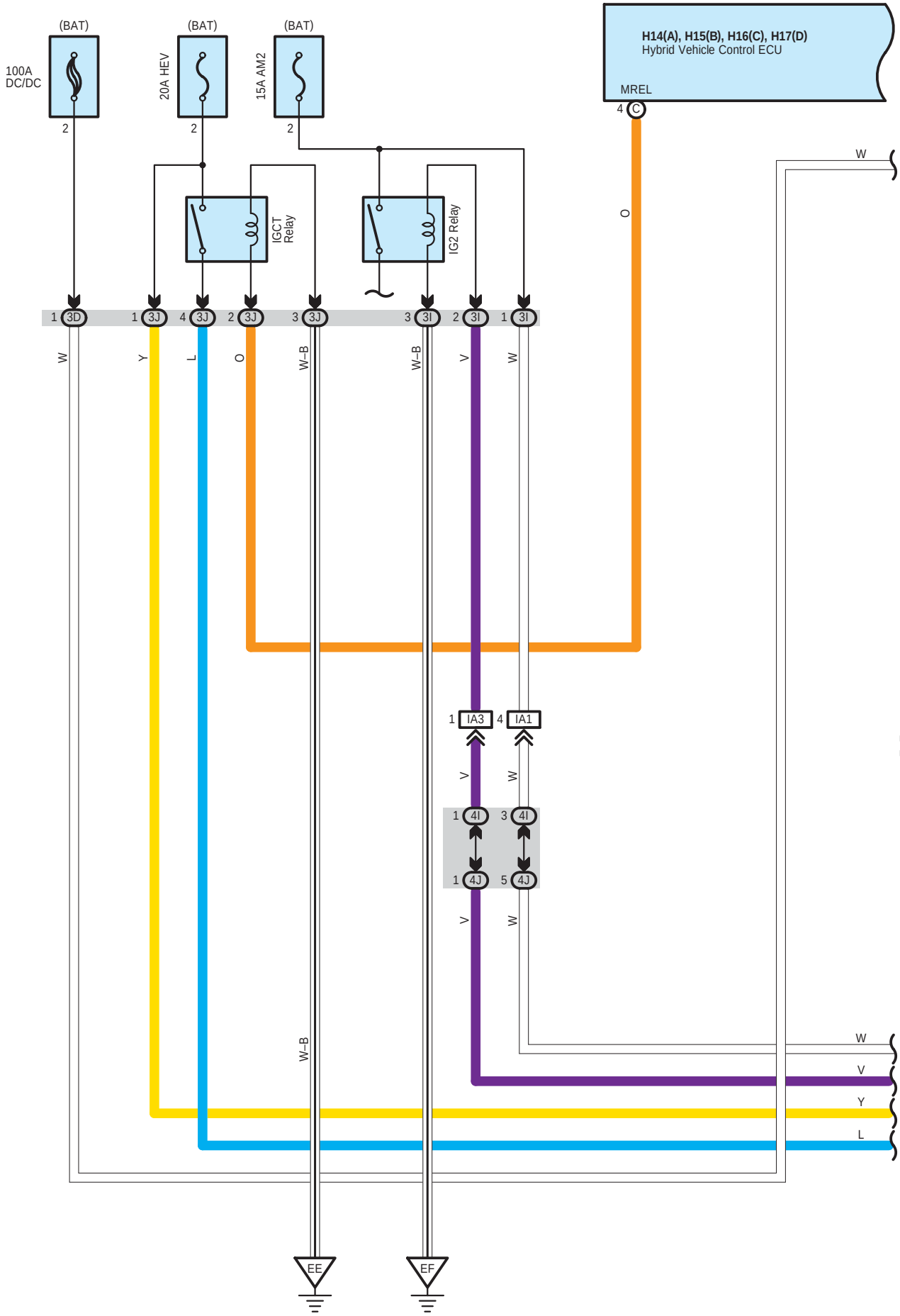

cardiagn.com

H14(A), H15(B), H16(C), H17(D)
Hybrid Vehicle Control ECU

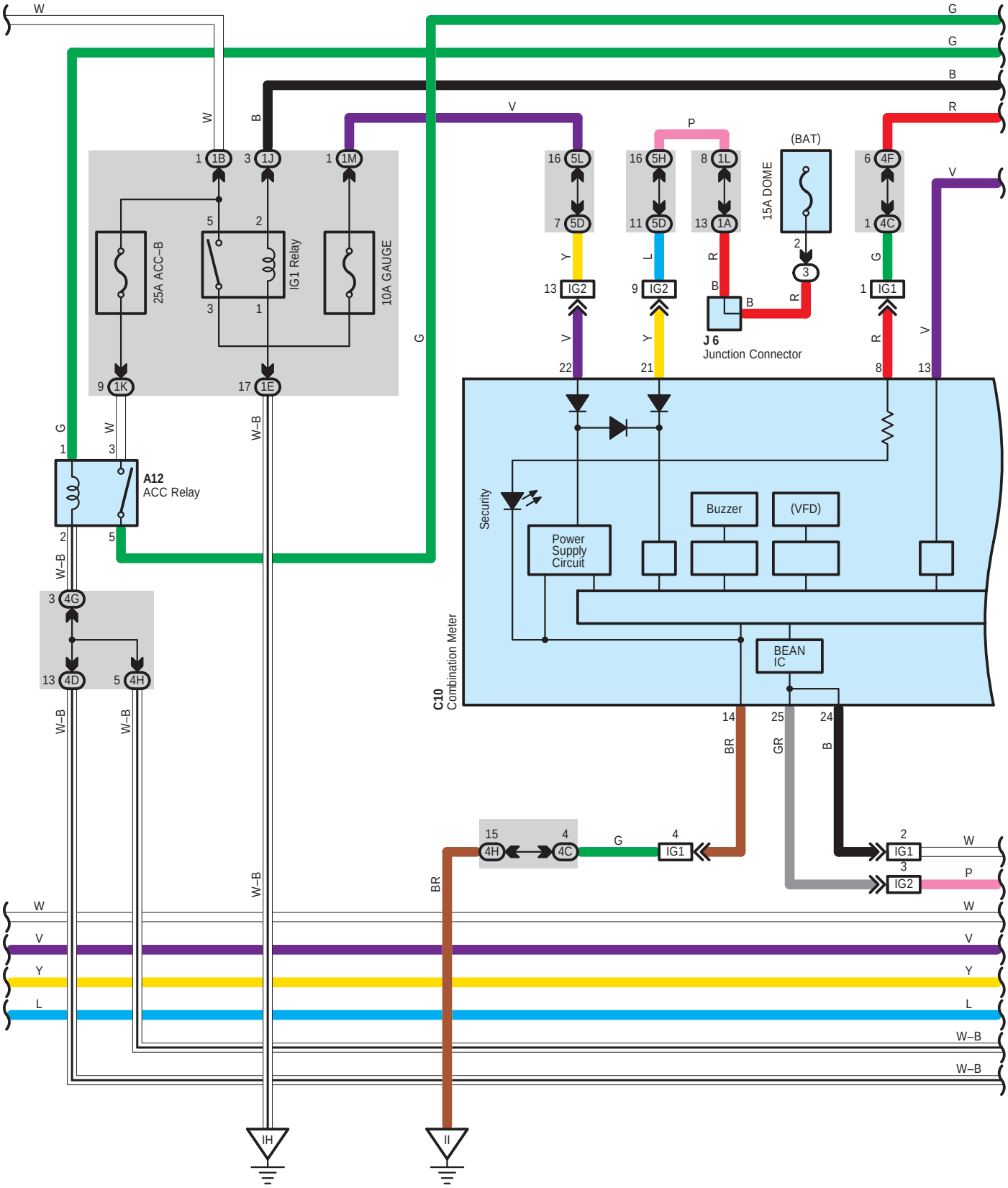

cardiagn.com

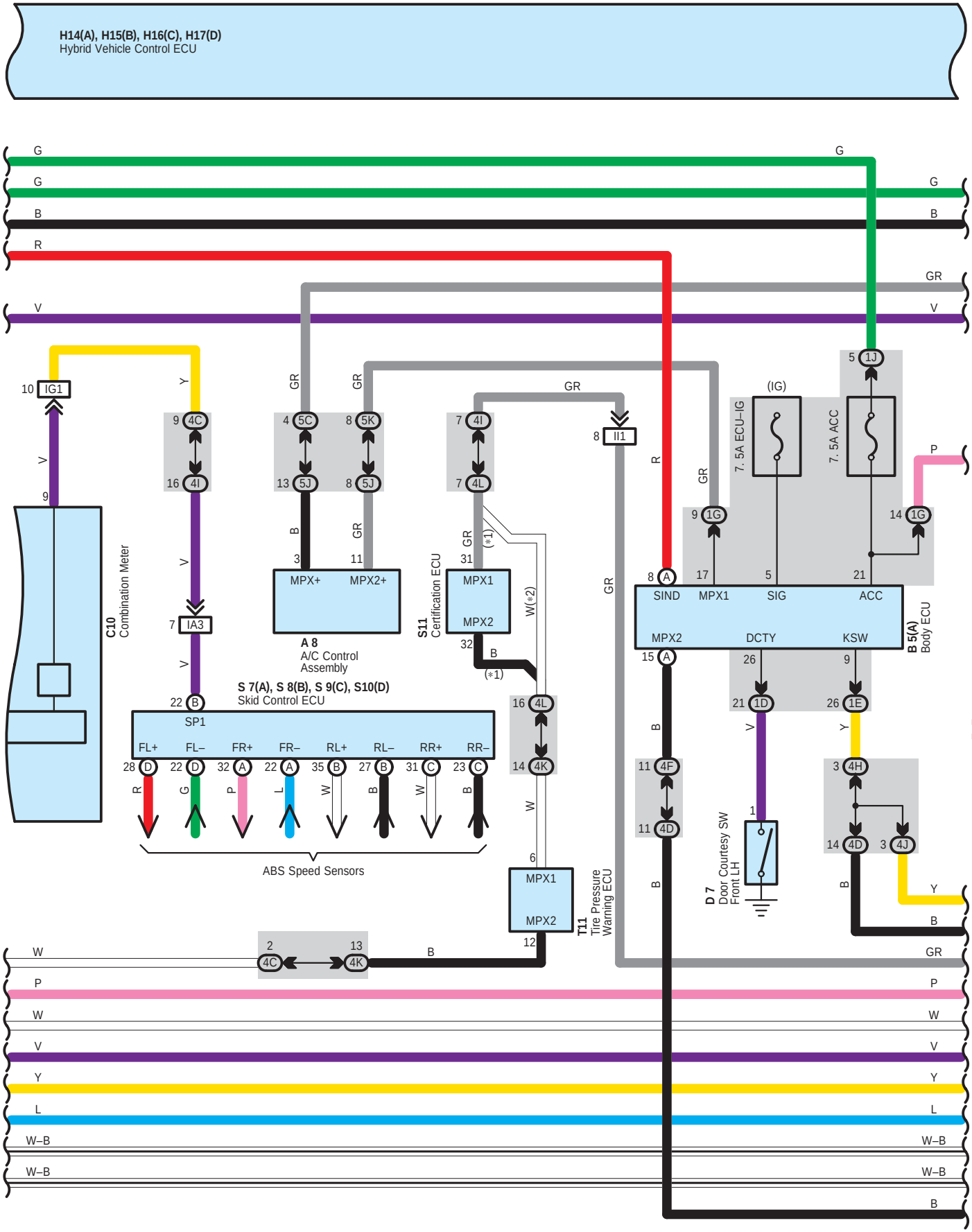

cardiagn.com

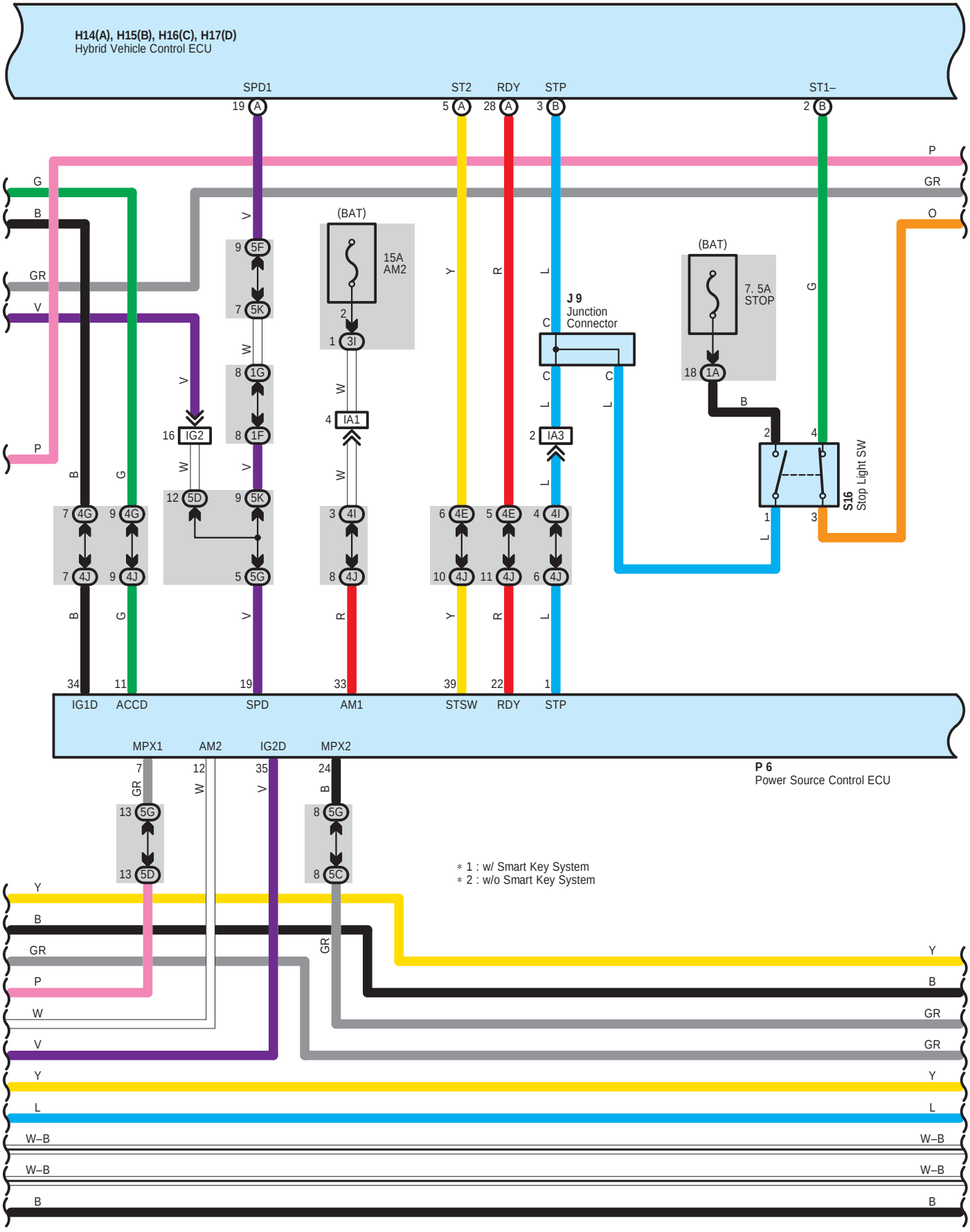

cardiagn.com

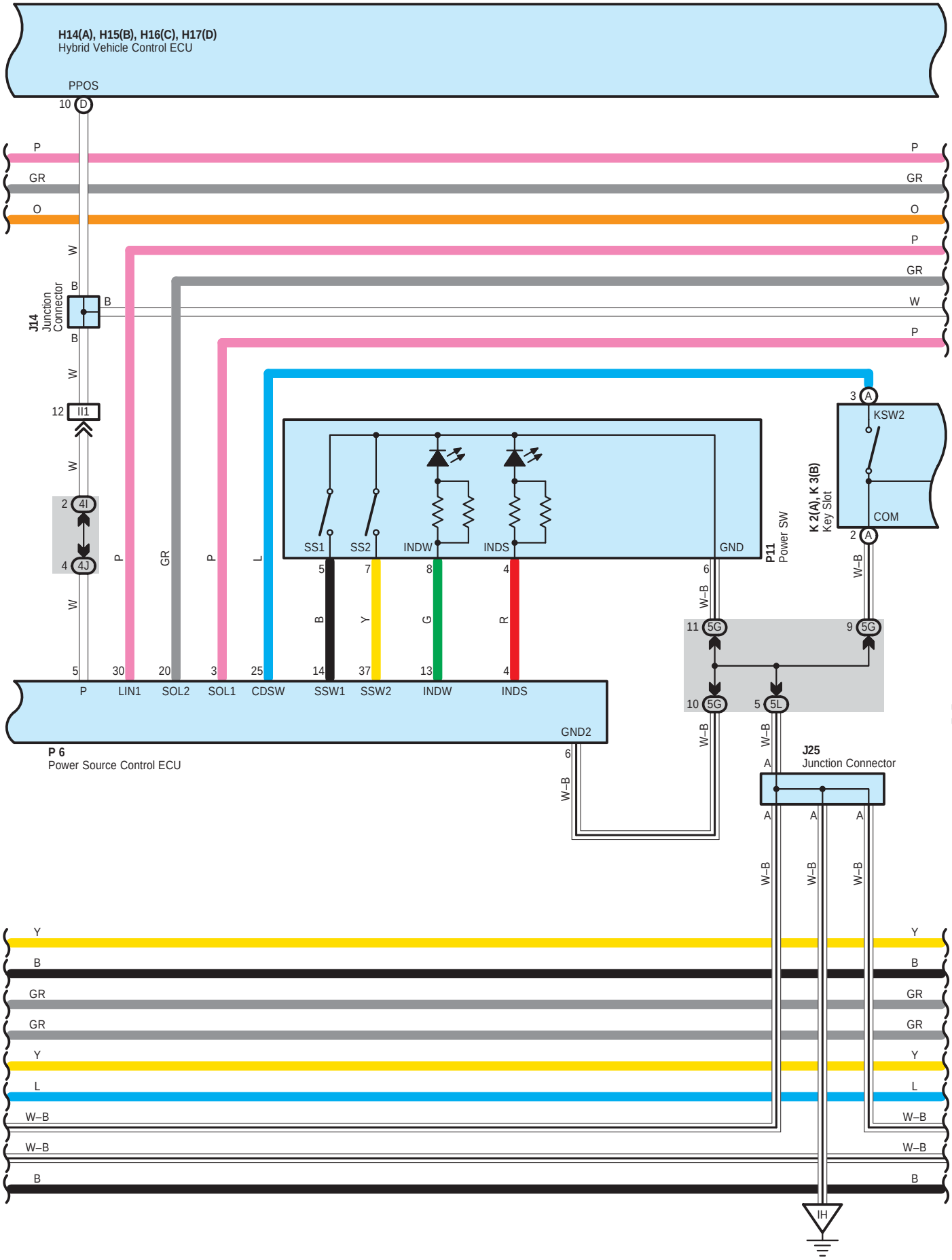

cardiagn.com

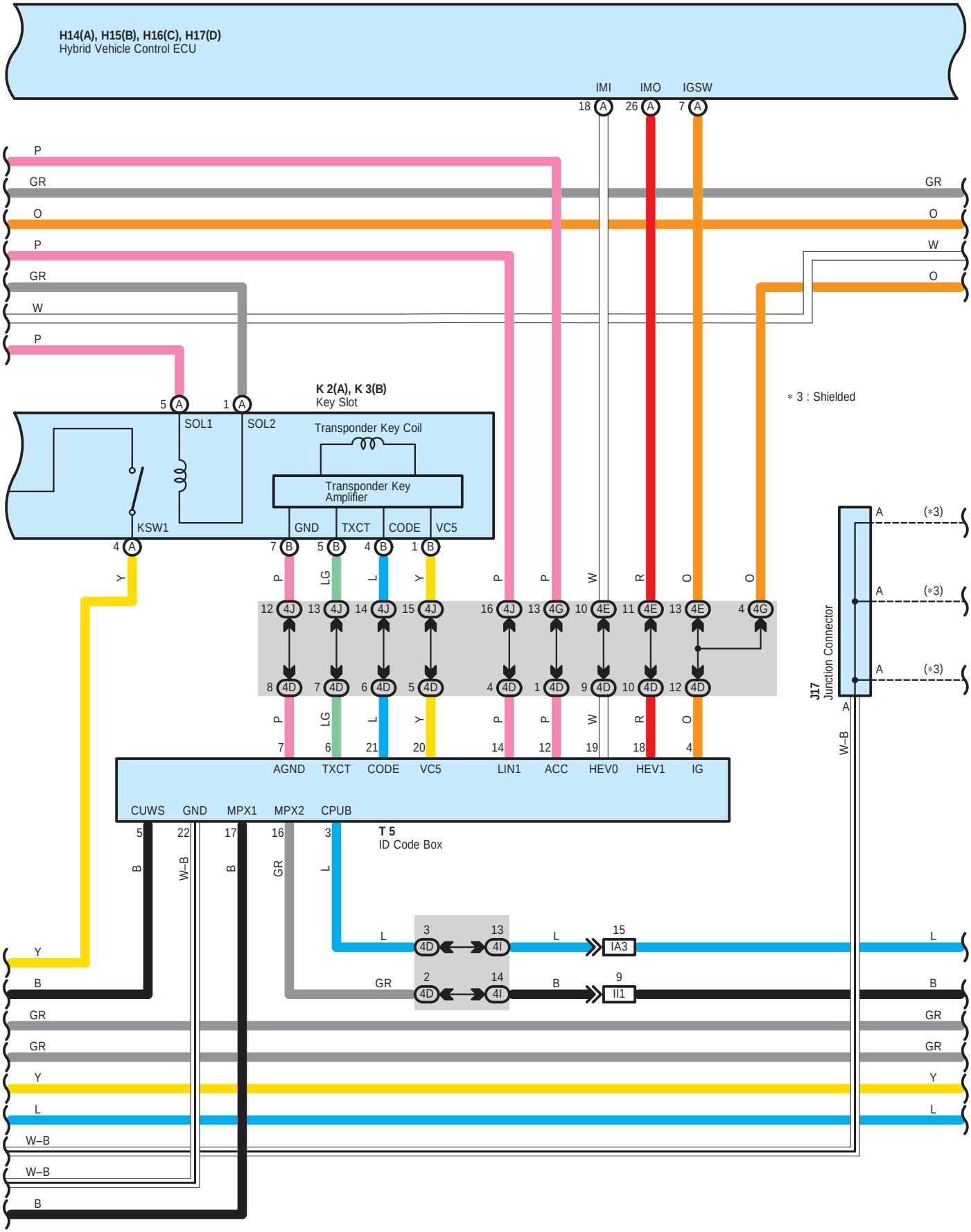

cardiagn.com

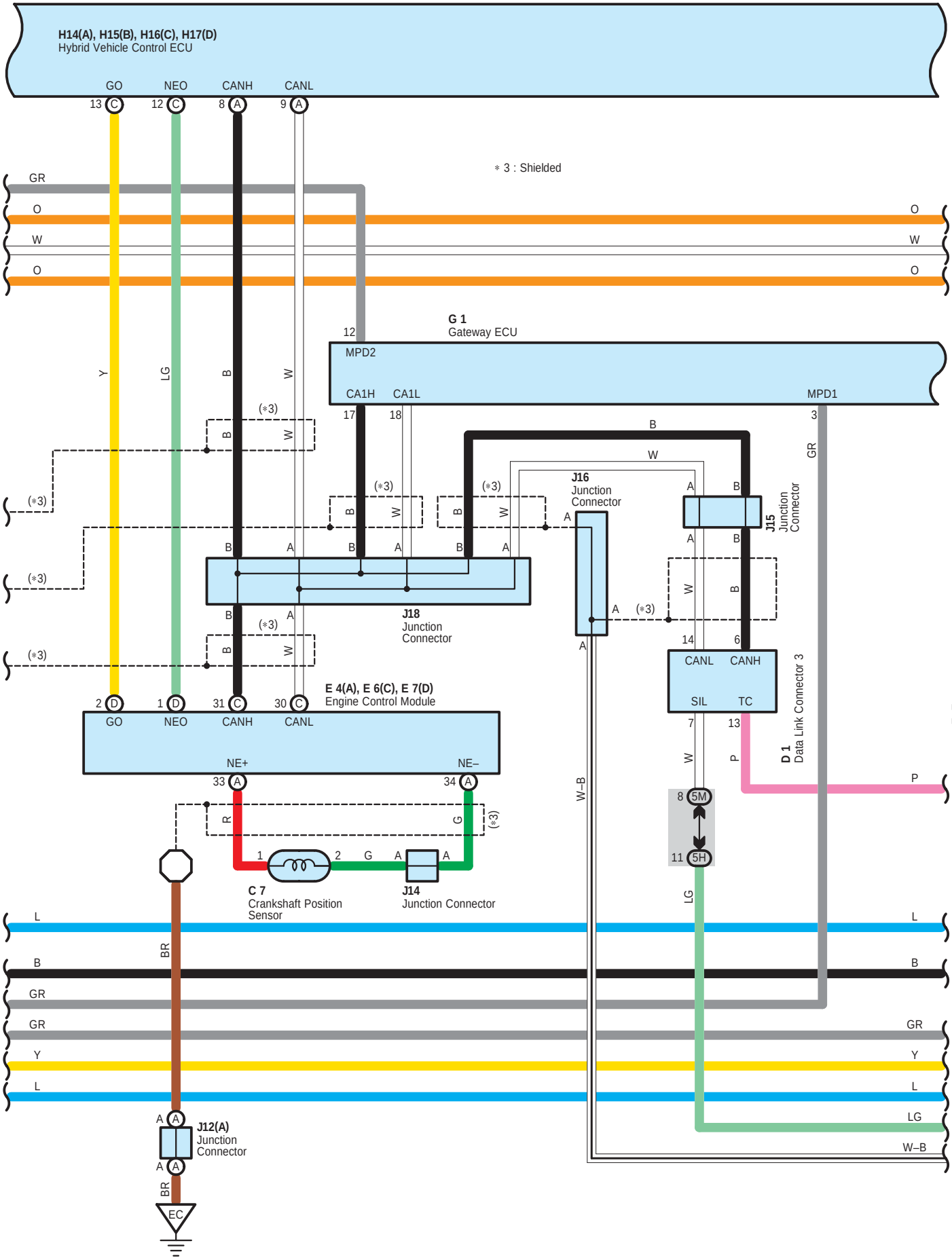

cardiagn.com

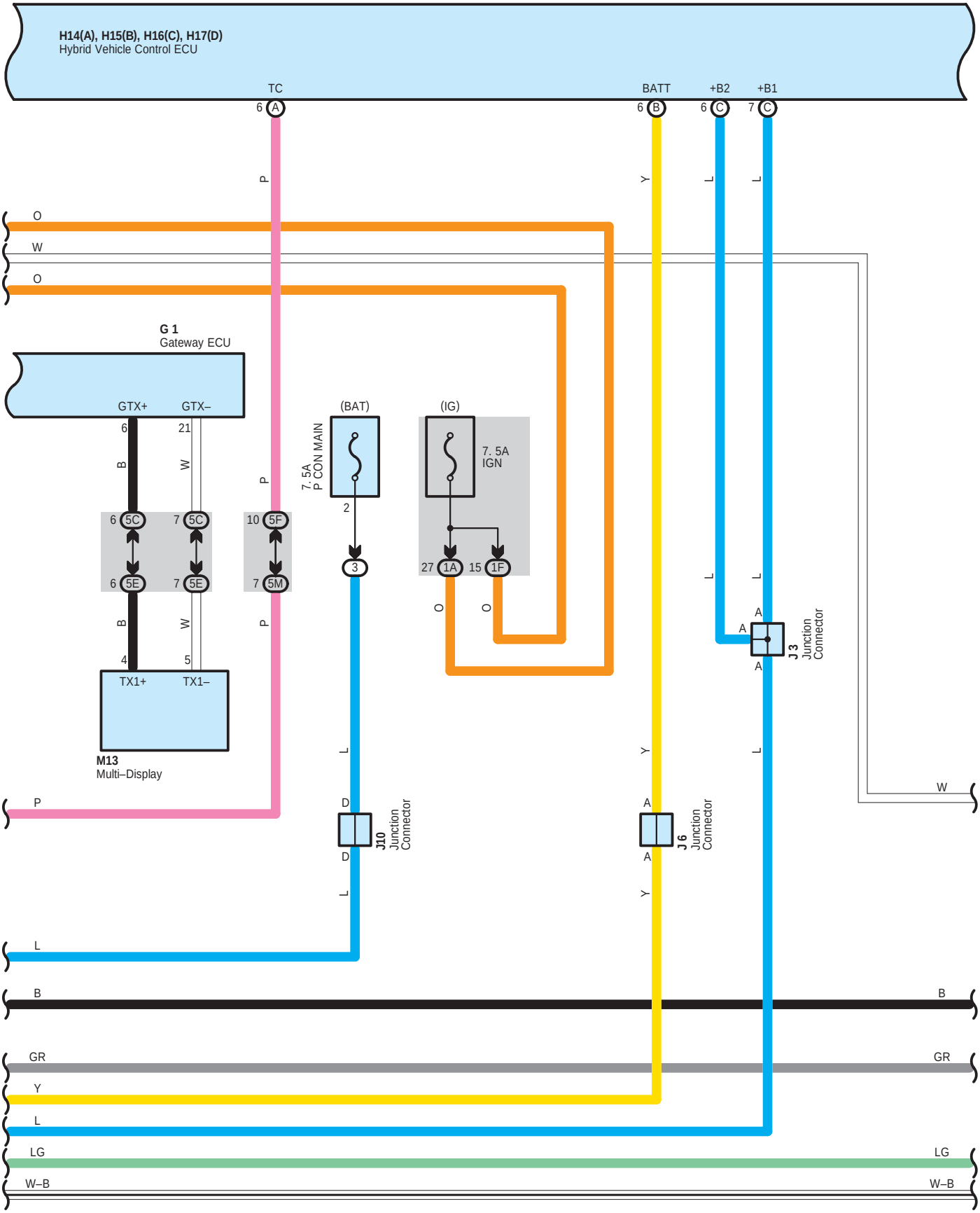

cardiagn.com

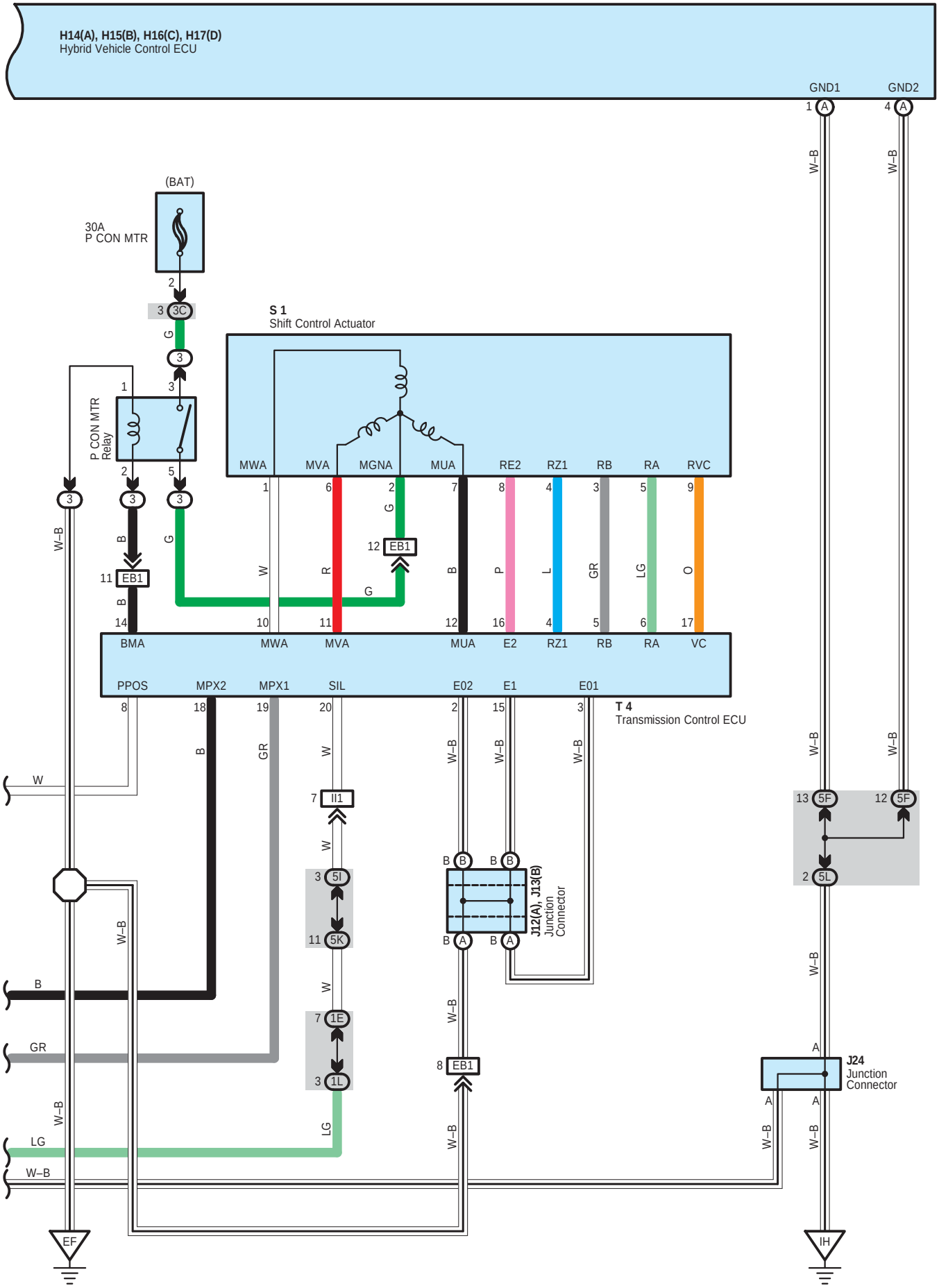

cardiagn.com

System Outline

This is the system to change power supply mode by pushing power SW and to start hybrid system by operating power SW and brake pedal simultaneously. It also has function to hold the electrical key in the key slot and not to release the key from it unless the power supply condition and shift position are met. If there is abnormality in the system, amber portion of power SW blinks to warn the driver.

1. ACC ON Operation

When the electrical key turns on half–inserted SW and deep–inserted SW after inserting in the key slot, transponder key computer activates transponder key amplifier incorporated in key slot to identify ID. After the identification, if power SW is pushed without depressing brake pedal, power source control ECU starts. The ECU confirms that the brake pedal is not depressed from signal of stop light SW and also requests ID code box for ID identification result. If the ID identification is normal, power source control ECU turns on ACC relay and changes indicator of power SW to green lighting. In consequence, power supply is set to ACC ON condition.

2. IG ON Operation

If power SW is pushed without depressing brake pedal when ACC ON, power source control ECU confirms that the brake pedal is not depressed, and then turns on IG1 relay and IG2 relay as well as change indicator of power SW to amber lighting. Power supply is IG ON condition then.

3. Hybrid Start–Up Operation (READY)

When the electrical key turns on half–inserted SW and deep–inserted SW after inserting in the key slot, ID code box activates transponder key amplifier incorporated in key slot to identify ID. After the identification, if power SW is pushed with depressing brake pedal, power source control ECU starts. The ECU confirms that the brake pedal is depressed from signal of stop light SW and also requests ID code box for ID identification result. If the ID identification is normal, the ECU turns on ACC relay, IG1 relay and IG2 relay, and changes indicator of power SW to amber lighting. Power supply is IG ON condition then.

After that, power source control ECU sends start–up signal to hybrid vehicle control ECU. Hybrid vehicle control ECU and ID code box make communication for start–up permission. Hybrid vehicle control ECU controls to start–up hybrid system (READY).

At starting up hybrid system, power source control ECU controls to light off indicator of power SW.

4. Power Supply Off Operation

∗ When shift range is in P range

If power SW is pushed with power supply at READY condition while the vehicle is stationary, power source control ECU confirms that shift position is in P position, and then turns off ACC relay, IG1 relay and IG2 relay to put power supply in OFF condition. The ECU also controls to light off indicator of power SW.

If power SW is pushed with power supply at IG ON condition and without depressing brake pedal while the vehicle is stationary, power source control ECU confirms that shift position is in P position, and then turns off ACC relay, IG1 relay and IG2 relay to put power supply in OFF condition. The ECU also controls to light off indicator of power SW.

If electrical key is taken off from key slot with power supply at ACC ON condition while the vehicle is stationary, power source control ECU controls to put power supply in OFF condition automatically, which lights off indicator of power SW.

∗ When shift position is in other than P position

If power SW is pushed with power supply at IG ON (Including READY) condition while the vehicle is stationary, parking lock operation is carried out. After that, power source control ECU confirms that shift position is in P position and then turns off ACC relay, IG1 relay and IG2 relay to put power supply in OFF condition. The ECU controls to light off indicator of power SW.

5. Key Interlock Operation

Power source control ECU controls to hold the electrical key in the key slot and not to release the key from it unless the power supply condition and shift position are met. Power supply condition and shift position during the key interlock in operation are as follows;

∗ At starting–up hybrid system
∗ At power supply at IG ON
∗ At power supply at ACC ON and shift position at other than P position

6. Emergency Stop Operation of Hybrid System

If power SW is kept pushed more than three seconds during driving, hybrid system stops and power supply is changed to ACC ON.

7. Power Supply Resuming Control

Power source control ECU always stores power supply condition (OFF, ACC ON, IG ON)

When power supply is resumed after shutting off power supply by disconnecting battery terminal, original power supply condition returns due to control of power source control ECU.

cardiagn.com

○ : **Parts Location**

Code		See Page	Code		See Page	Code		See Page
A8		48	J3		47	M13		50
A12		48	J6		50	P6		51
B5	A	48	J9		50	P11		51
C7		46	J10		50	S1		47
C10		49	J12	A	50	S7	A	51
D1		49	J13	B	50	S8	B	51
D7		52	J14		50	S9	C	51
E4	A	49	J15		50	S10	D	51
E6	C	49	J16		50	S11		51
E7	D	49	J17		50	S16		51
G1		49	J18		50	T4		51
H14	A	49	J24		50	T5		51
H15	B	49	J25		50	T11		51
H16	C	49	K2	A	50			
H17	D	49	K3	B	50			

▭ : **Relay Blocks**

Code	See Page	Relay Blocks (Relay Block Location)
3	22	Engine Room R/B (Engine Compartment Left)

cardiagn.com

: **Junction Block and Wire Harness Connector**

Code	See Page	Junction Block and Wire Harness (Connector Location)
1A	30	Engine Room Main Wire and Driver Side J/B (Lower Finish Panel)
1B		
1D	30	Floor Wire and Driver Side J/B (Lower Finish Panel)
1E	30	Instrument Panel Wire and Driver Side J/B (Lower Finish Panel)
1F		
1G		
1J		
1K	31	
1L		
1M		
3C	23	Engine Room Main Wire and Engine Room J/B (Engine Compartment Left)
3D		
3I	24	
3J		
4C	38	Instrument Panel Wire and Center Connector No.1 (Behind the Combination Meter)
4D		
4E		
4F		
4G		
4H		
4I		
4J		
4K		
4L		
5C	42	Instrument Panel Wire and Center Connector No.2 (Instrument Panel Brace RH)
5D		
5E		
5F		
5G		
5H		
5I		
5J		
5K		
5L		
5M		

: **Connector Joining Wire Harness and Wire Harness**

Code	See Page	Joining Wire Harness and Wire Harness (Connector Location)
EB1	56	Engine Wire and Engine Room Main Wire (Inside of the Engine Room R/B)
IA1	58	Engine Room Main Wire and Instrument Panel Wire (Upper Parts of Front Body Pillar LH)
IA3		
IG1	59	Instrument Panel Wire and Instrument Panel No.2 Wire (Behind the Combination Meter)
IG2		
II1	59	Engine Wire and Instrument Panel Wire (Behind the Glove Box)

: **Ground Points**

Code	See Page	Ground Points Location
EC	56	Engine Block
EE	56	Left Side of the Suspension Tower
EF		
IH	58	Cowl Side Panel LH
II	58	Instrument Panel Brace LH

cardiagn.com

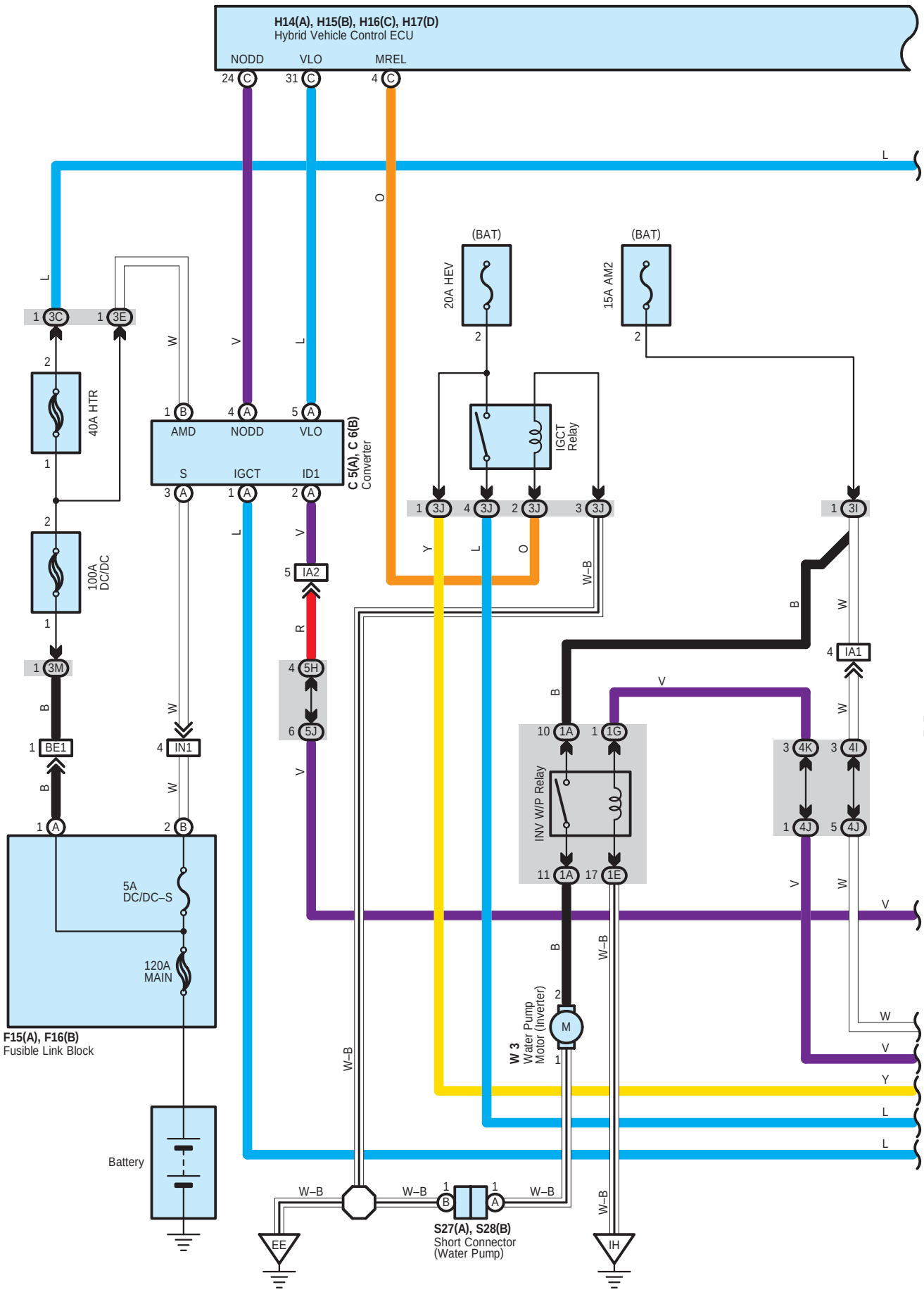

cardiagn.com

H14(A), H15(B), H16(C), H17(D)
Hybrid Vehicle Control ECU

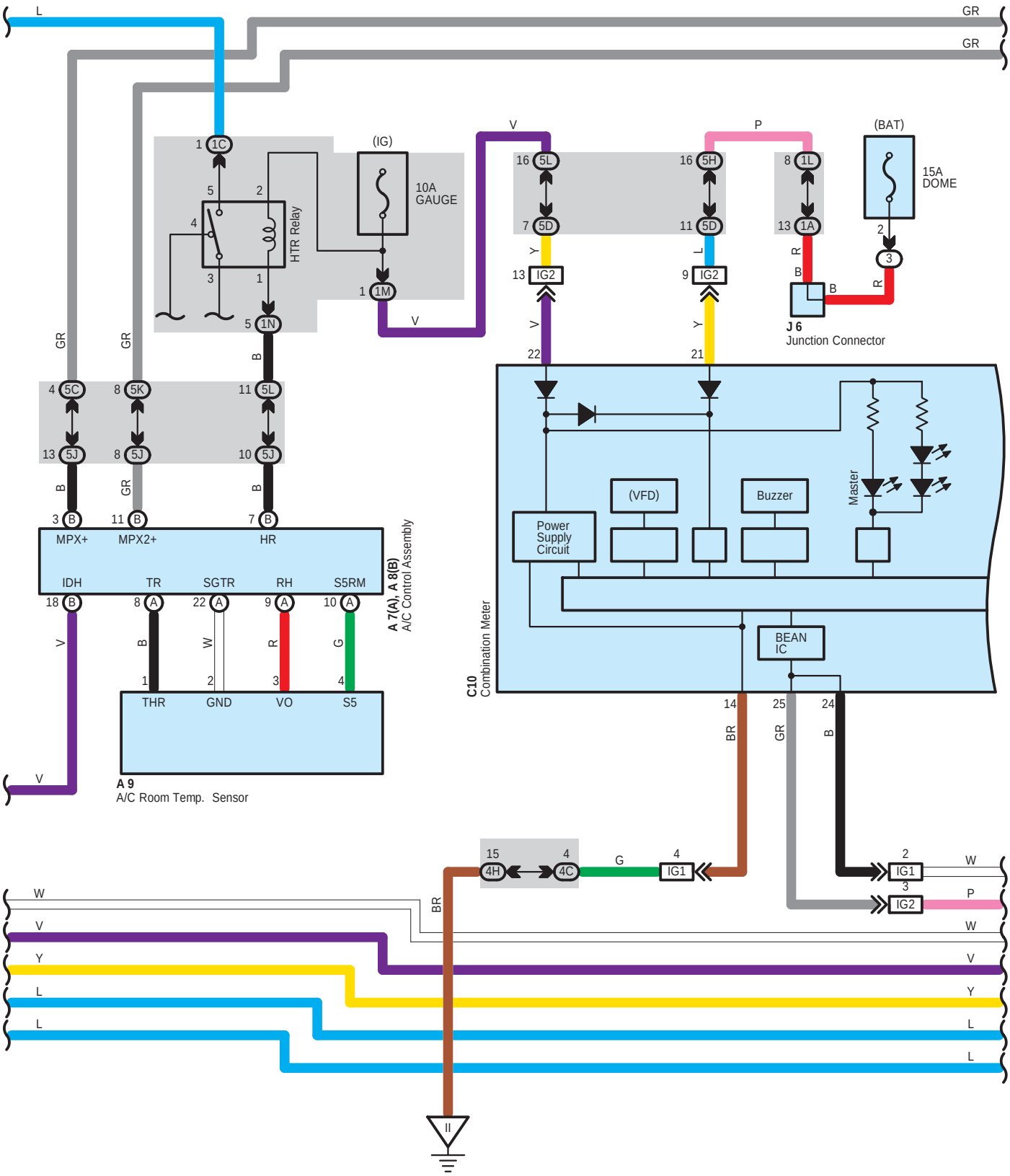

cardiagn.com

H14(A), H15(B), H16(C), H17(D)
Hybrid Vehicle Control ECU

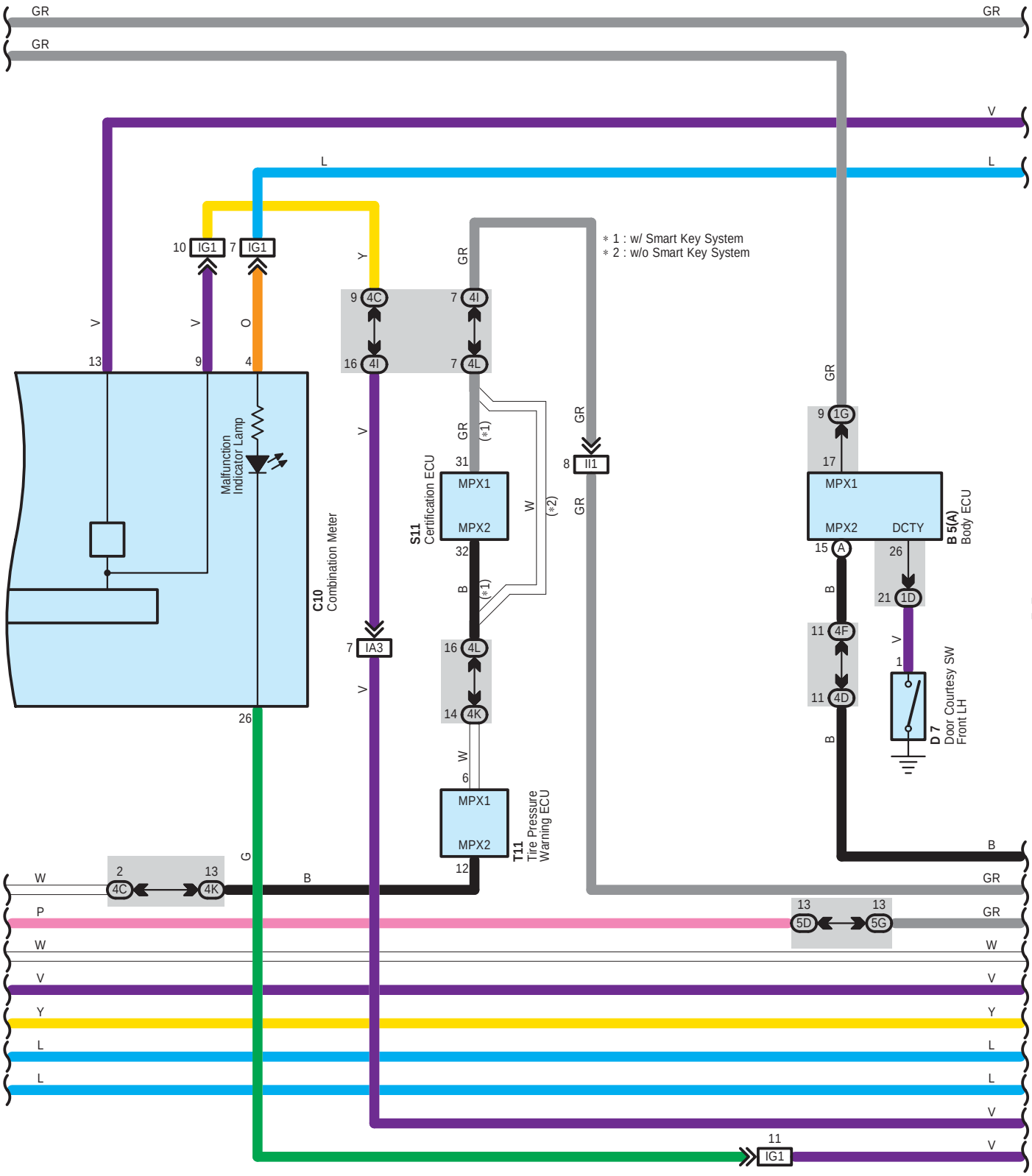

cardiagn.com

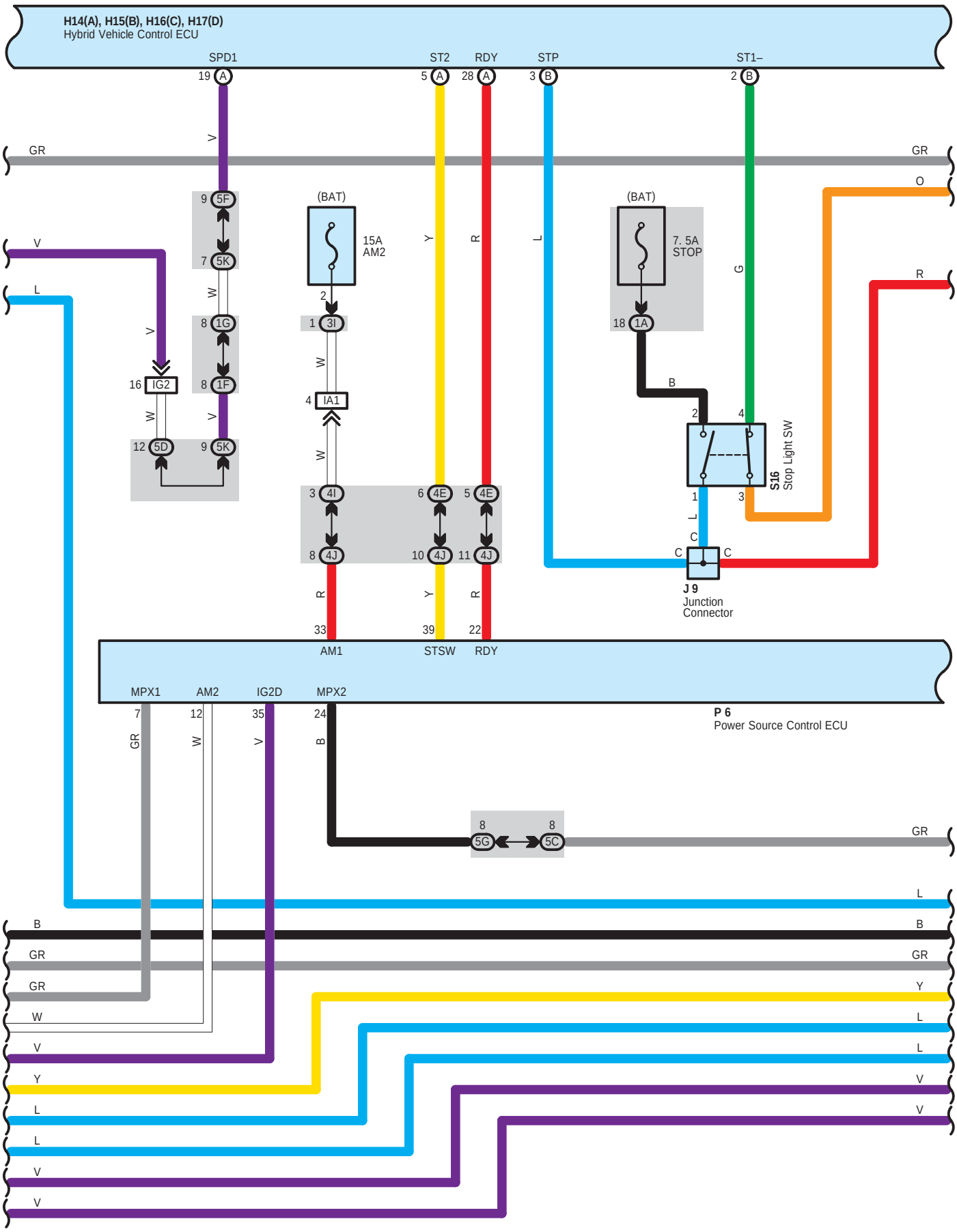

cardiagn.com

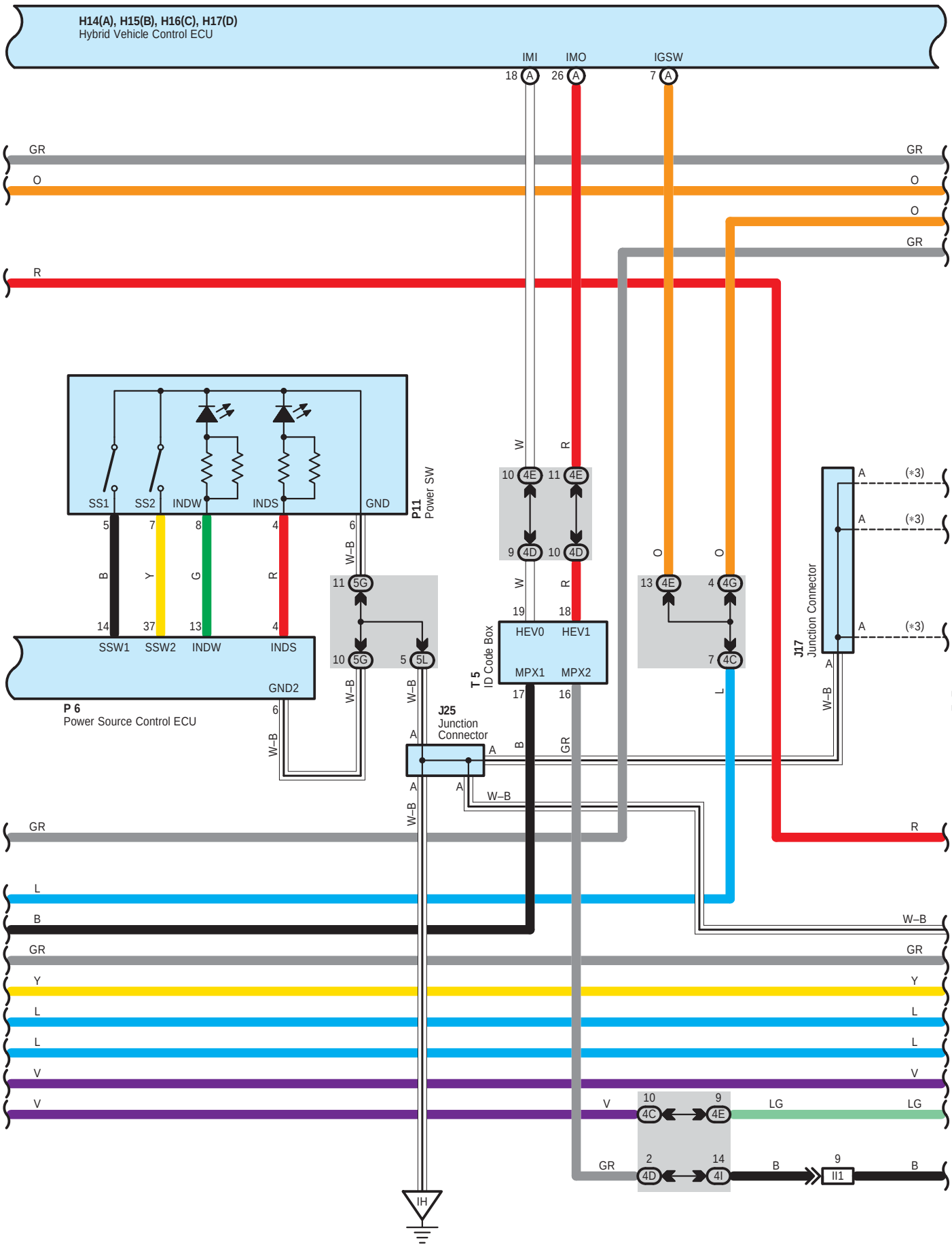

cardiagn.com

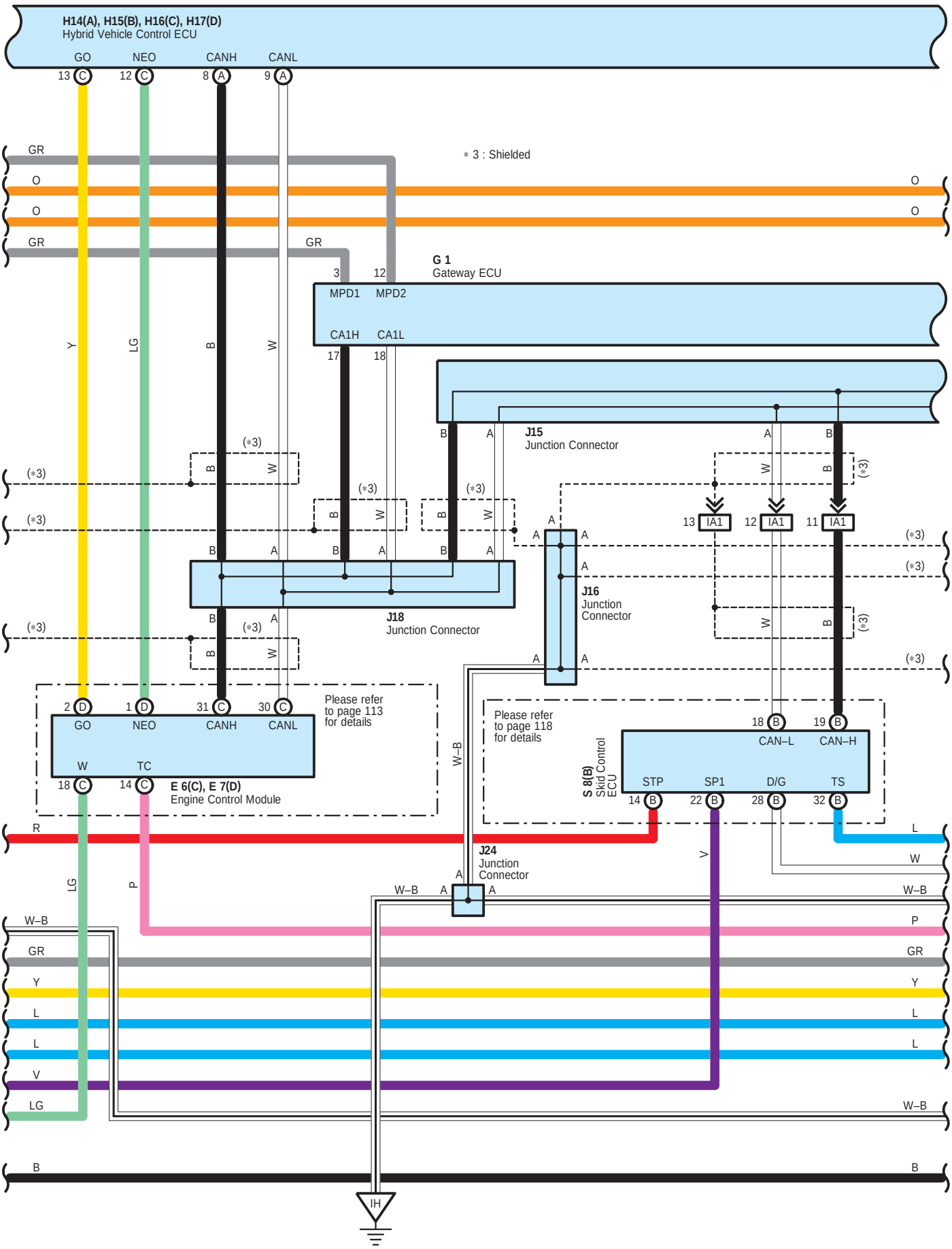

cardiagn.com

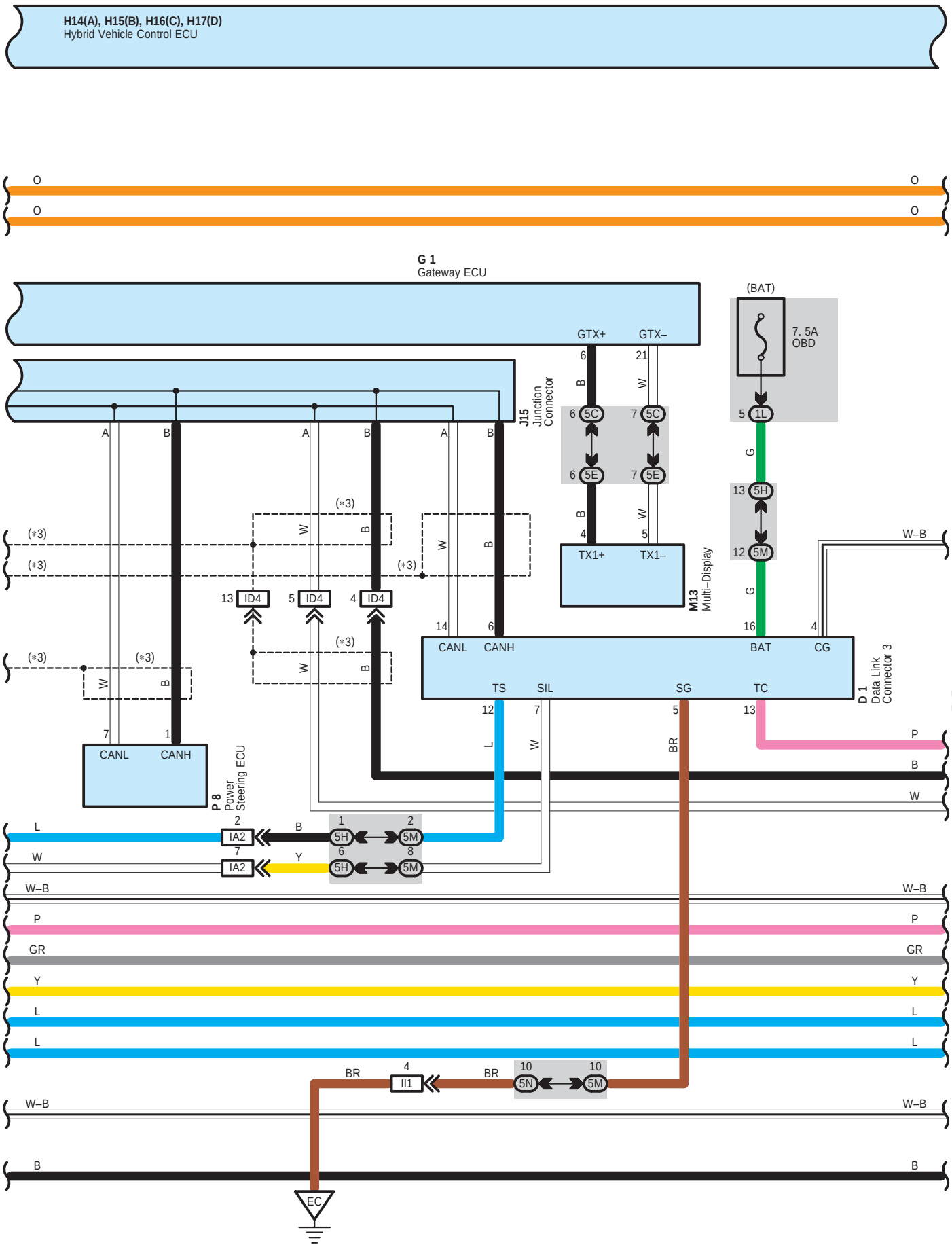

cardiagn.com

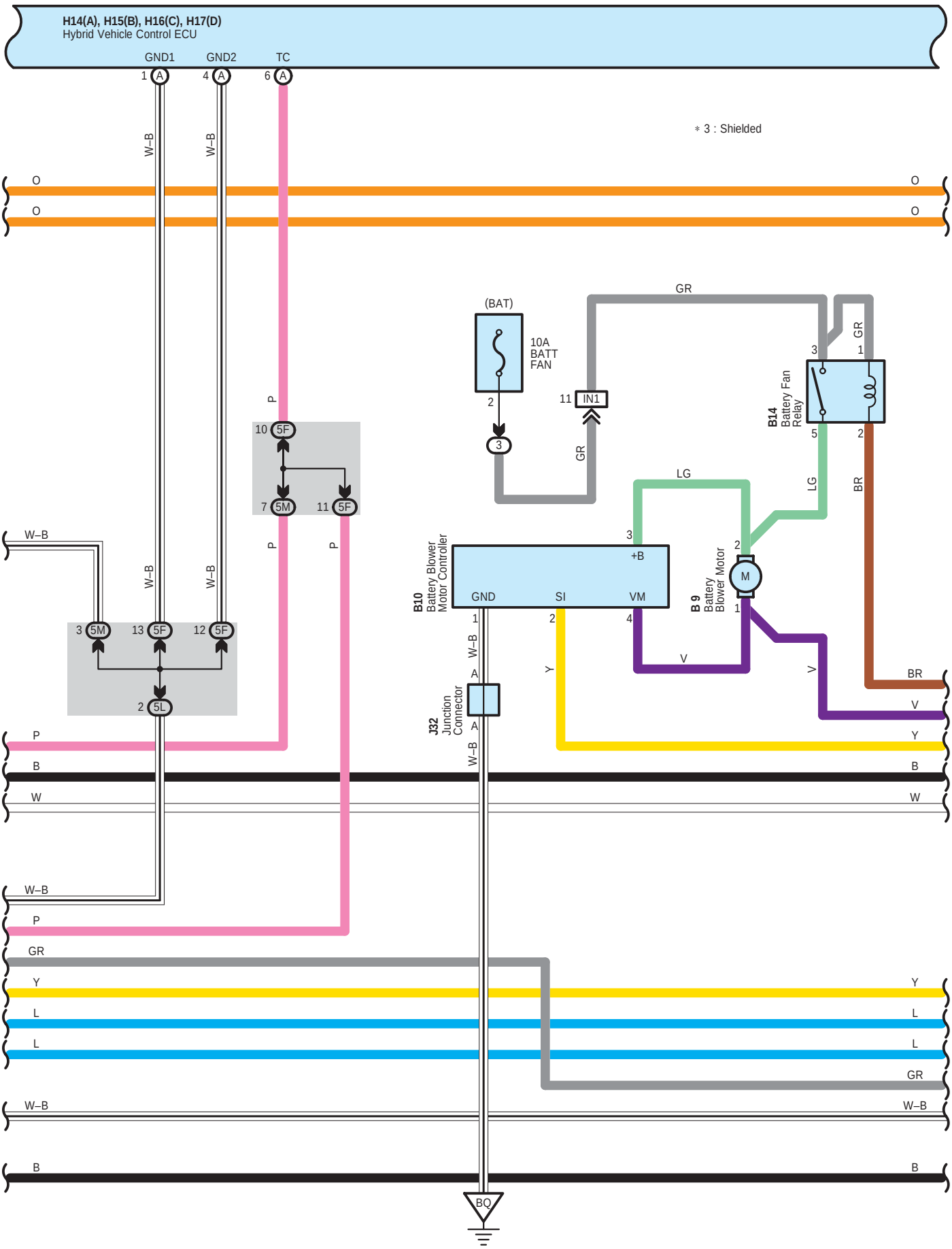

cardiagn.com

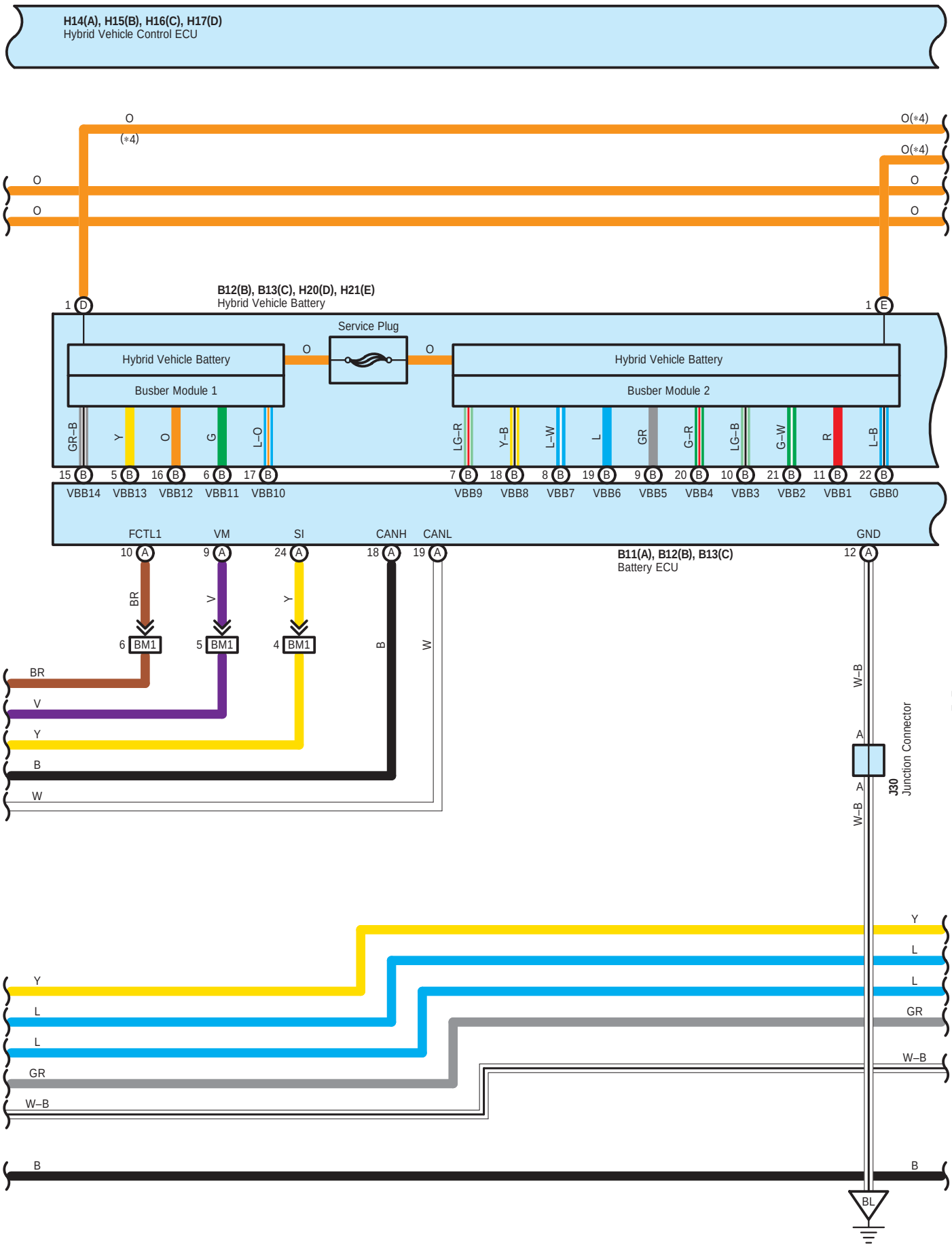

cardiagn.com

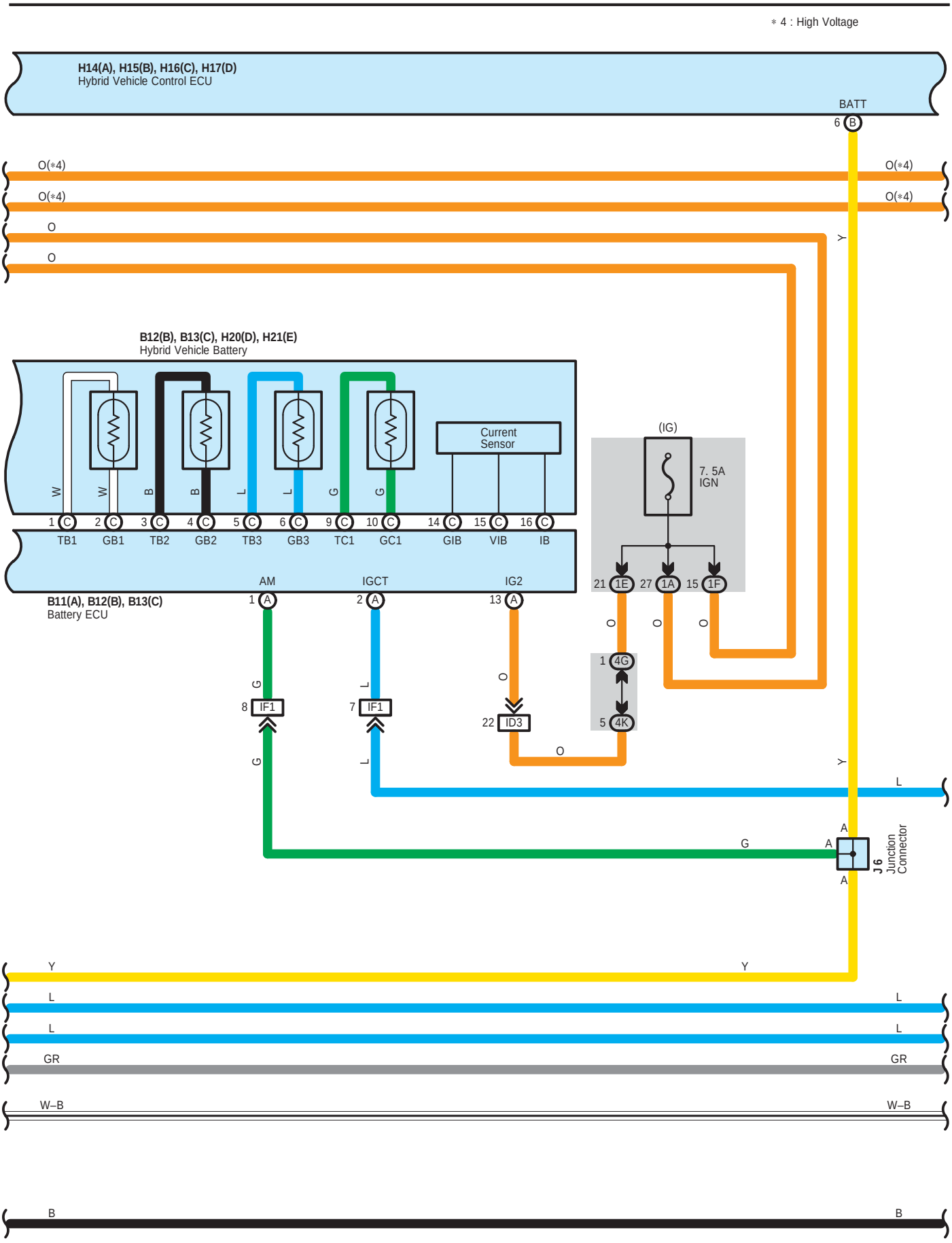

cardiagn.com

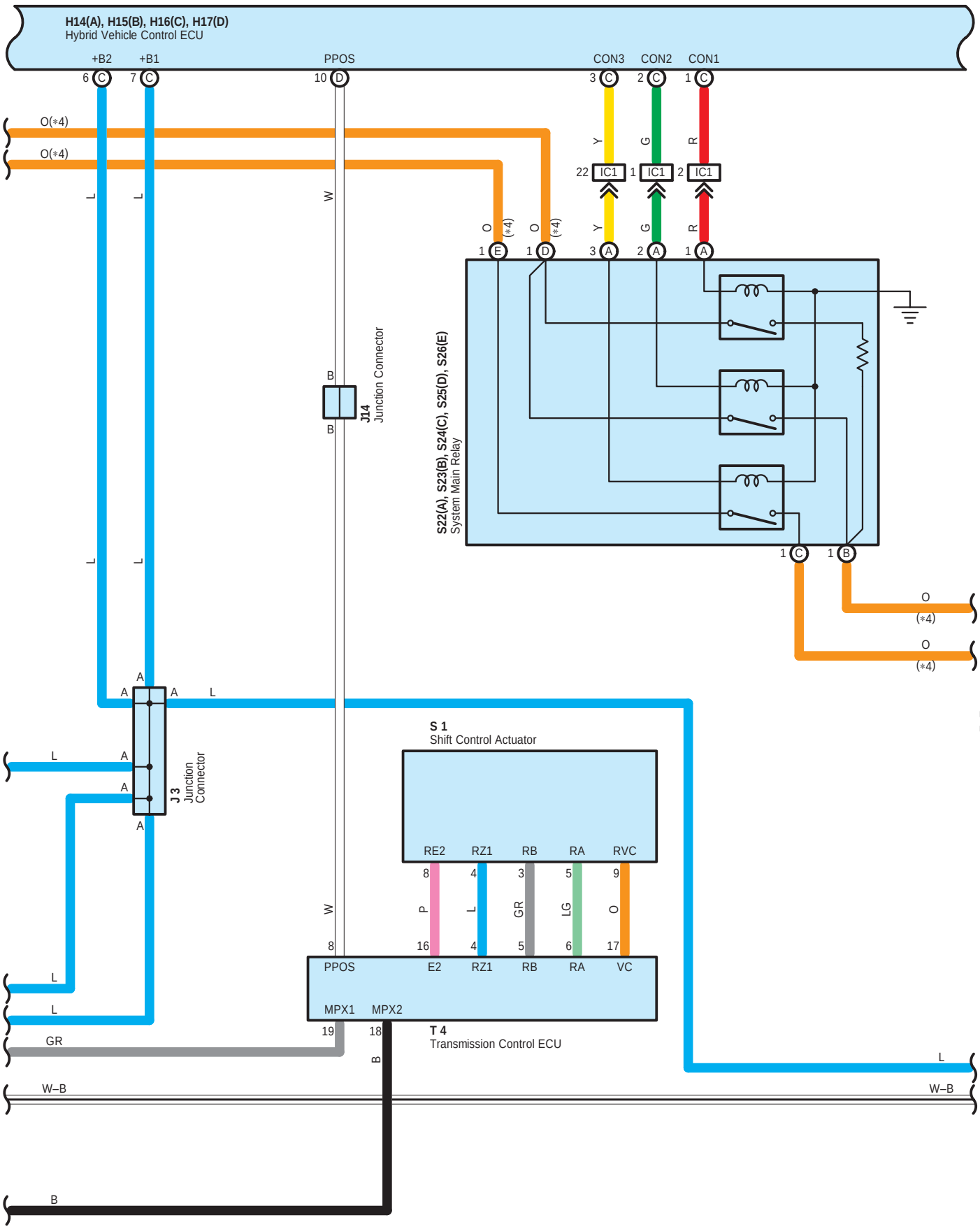

cardiagn.com

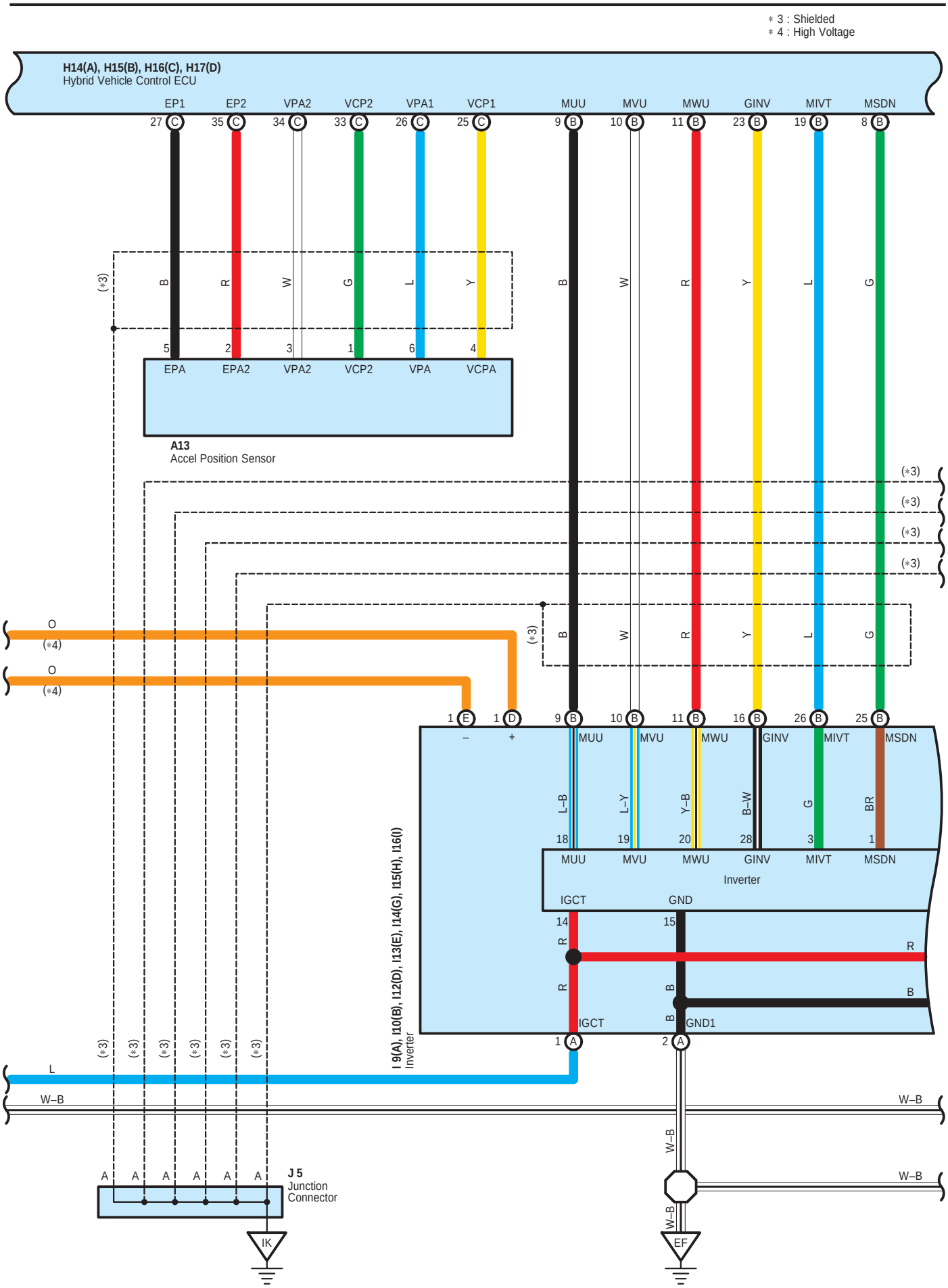

cardiagn.com

∗ 3 : Shielded

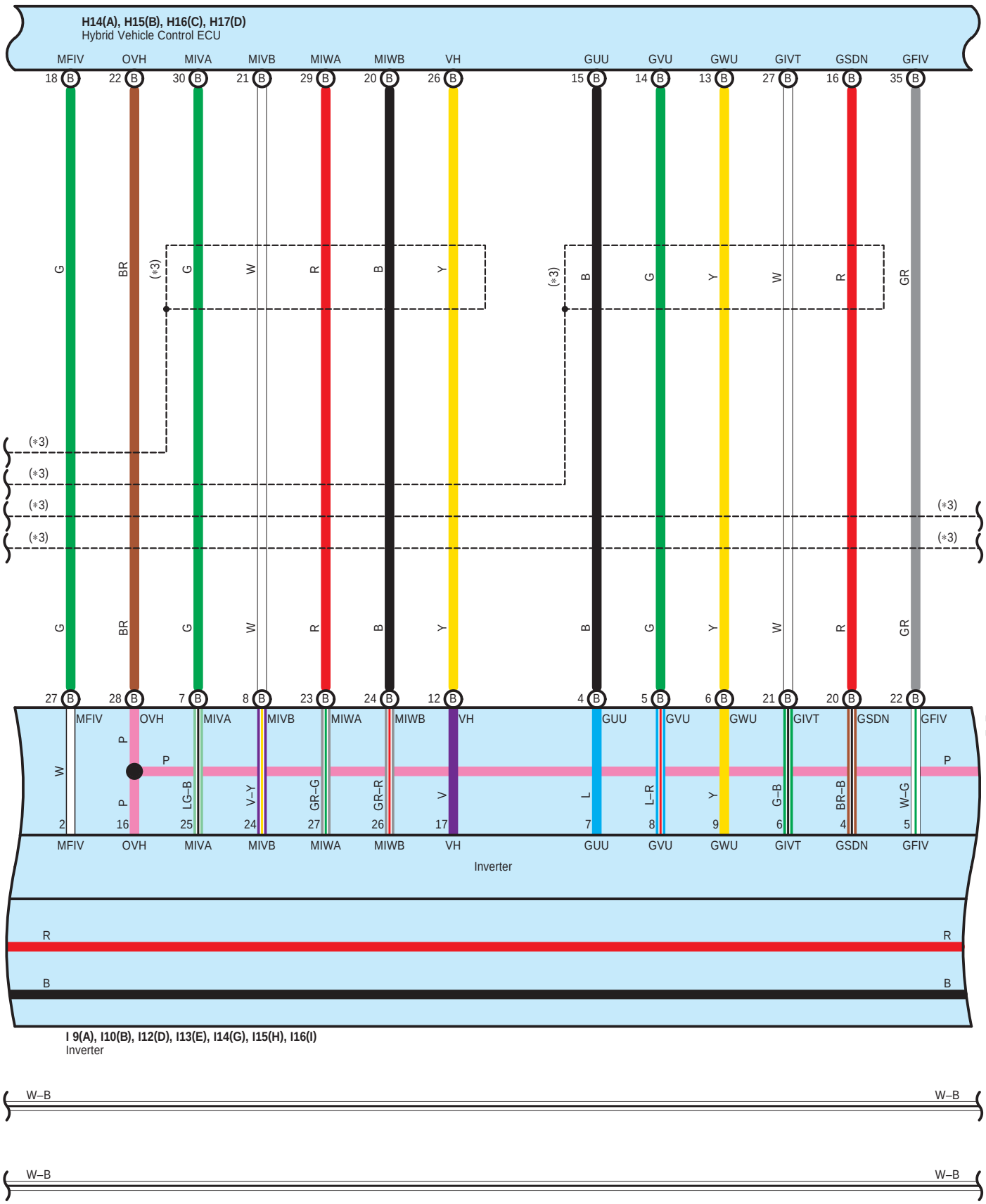

cardiagn.com

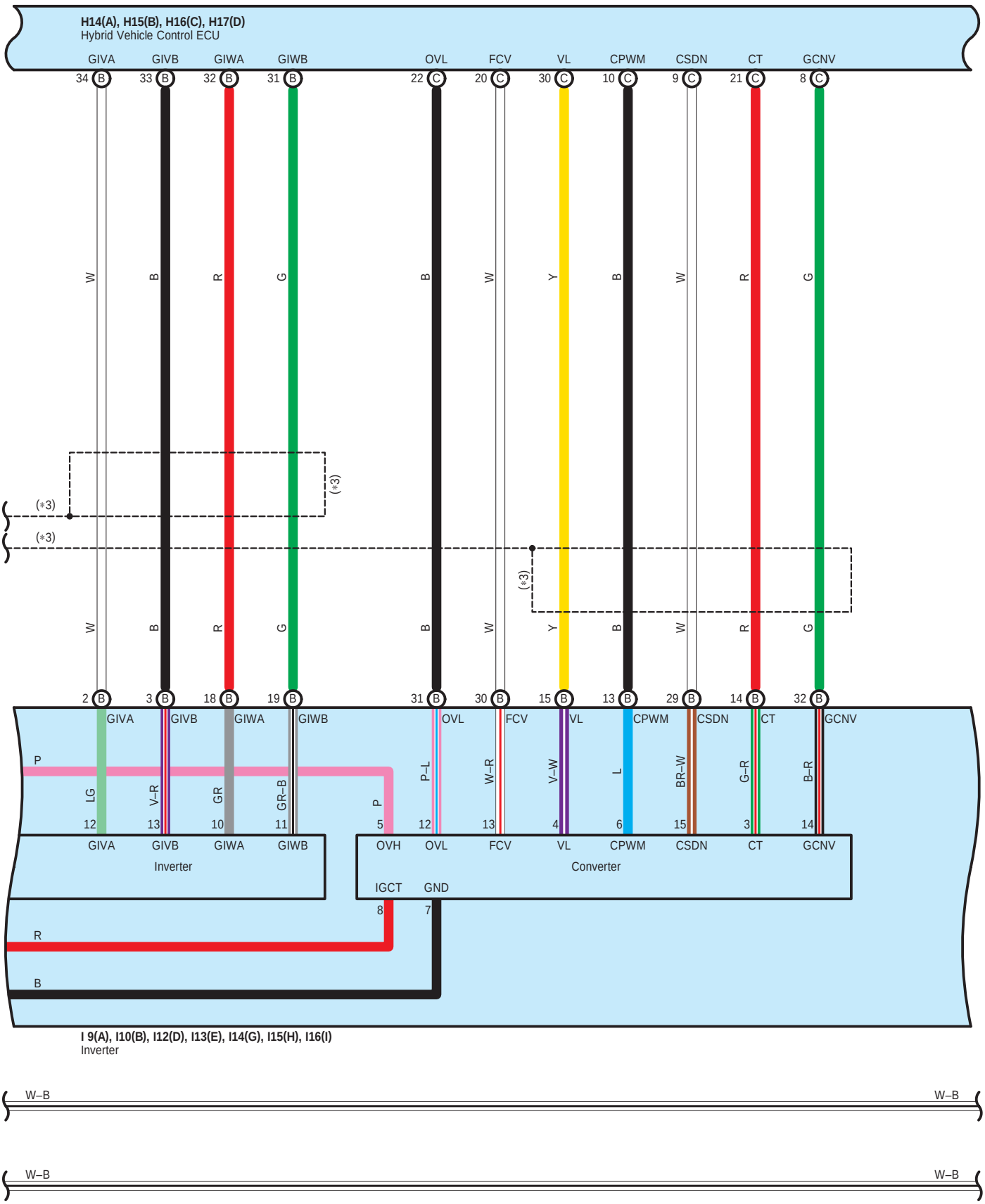

cardiagn.com

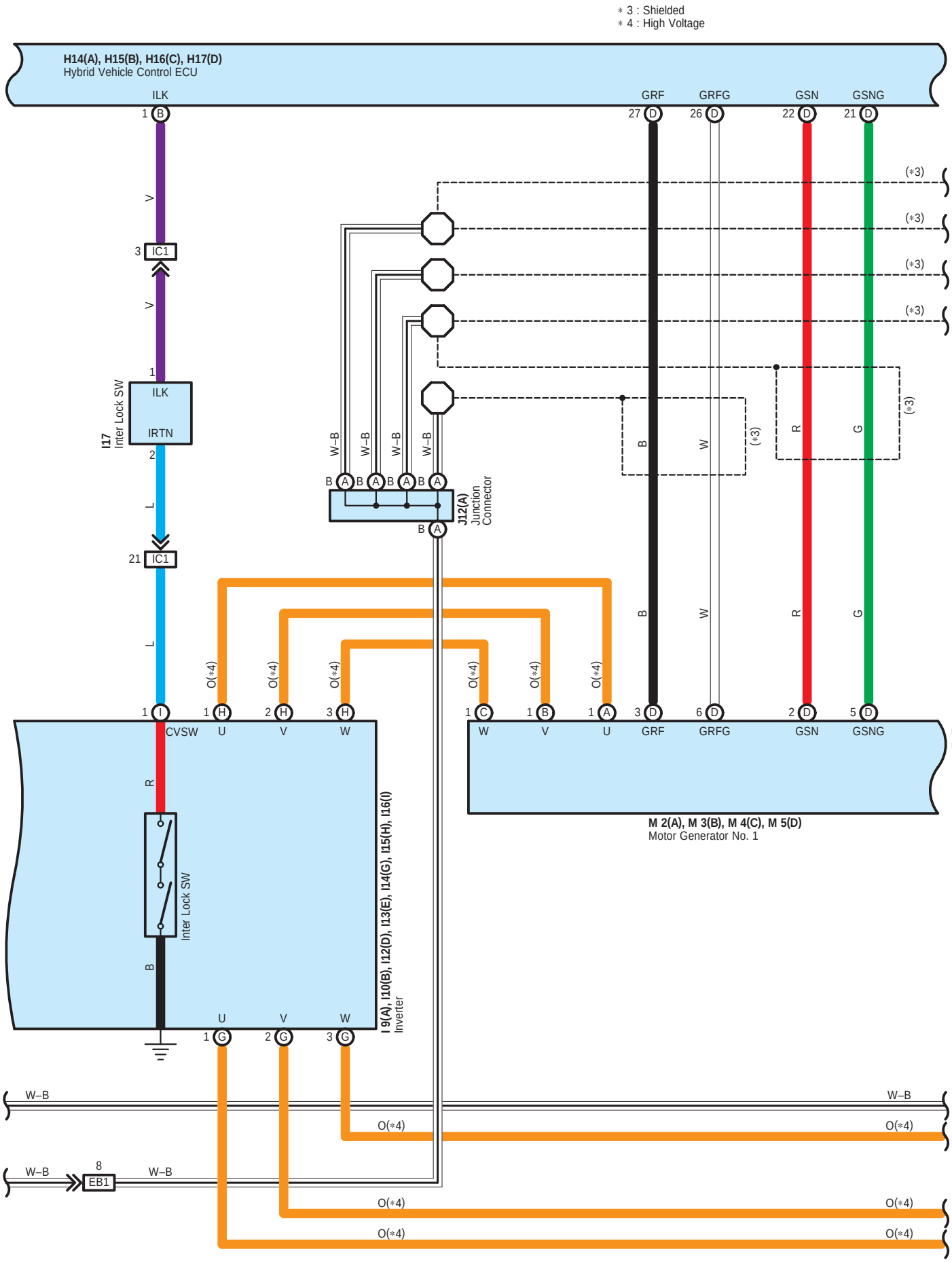

cardiagn.com

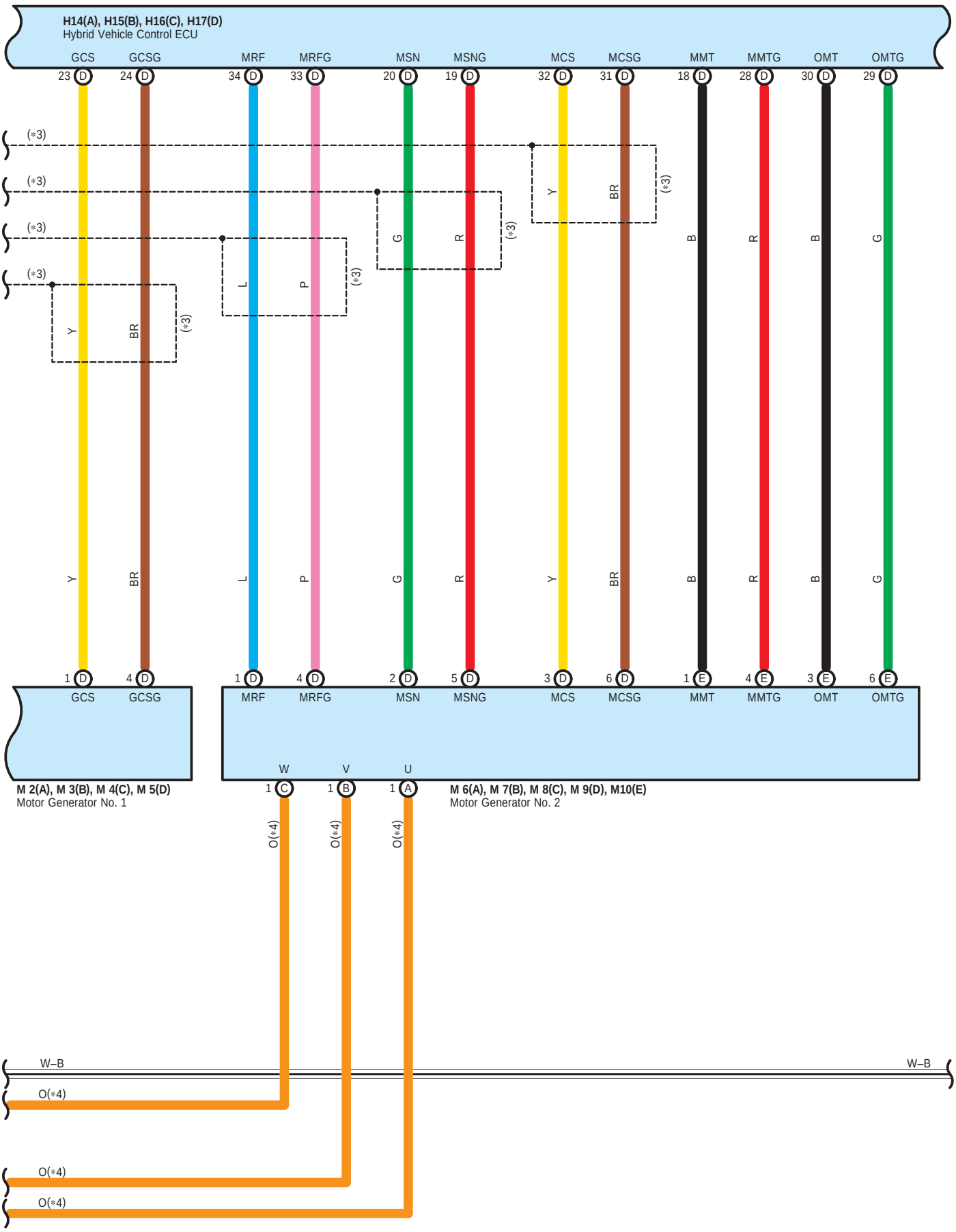

cardiagn.com

∗ 3 : Shielded

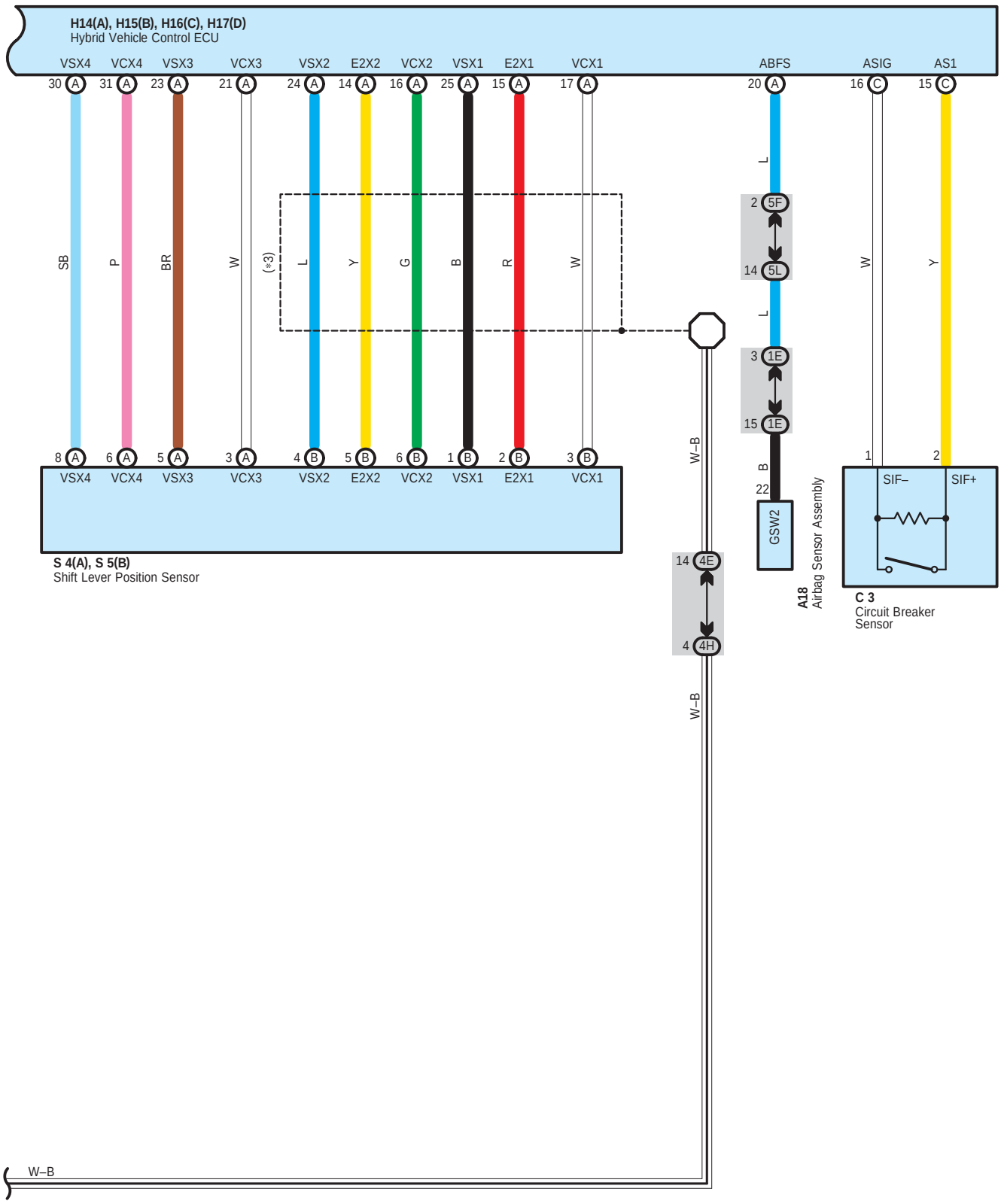

cardiagn.com

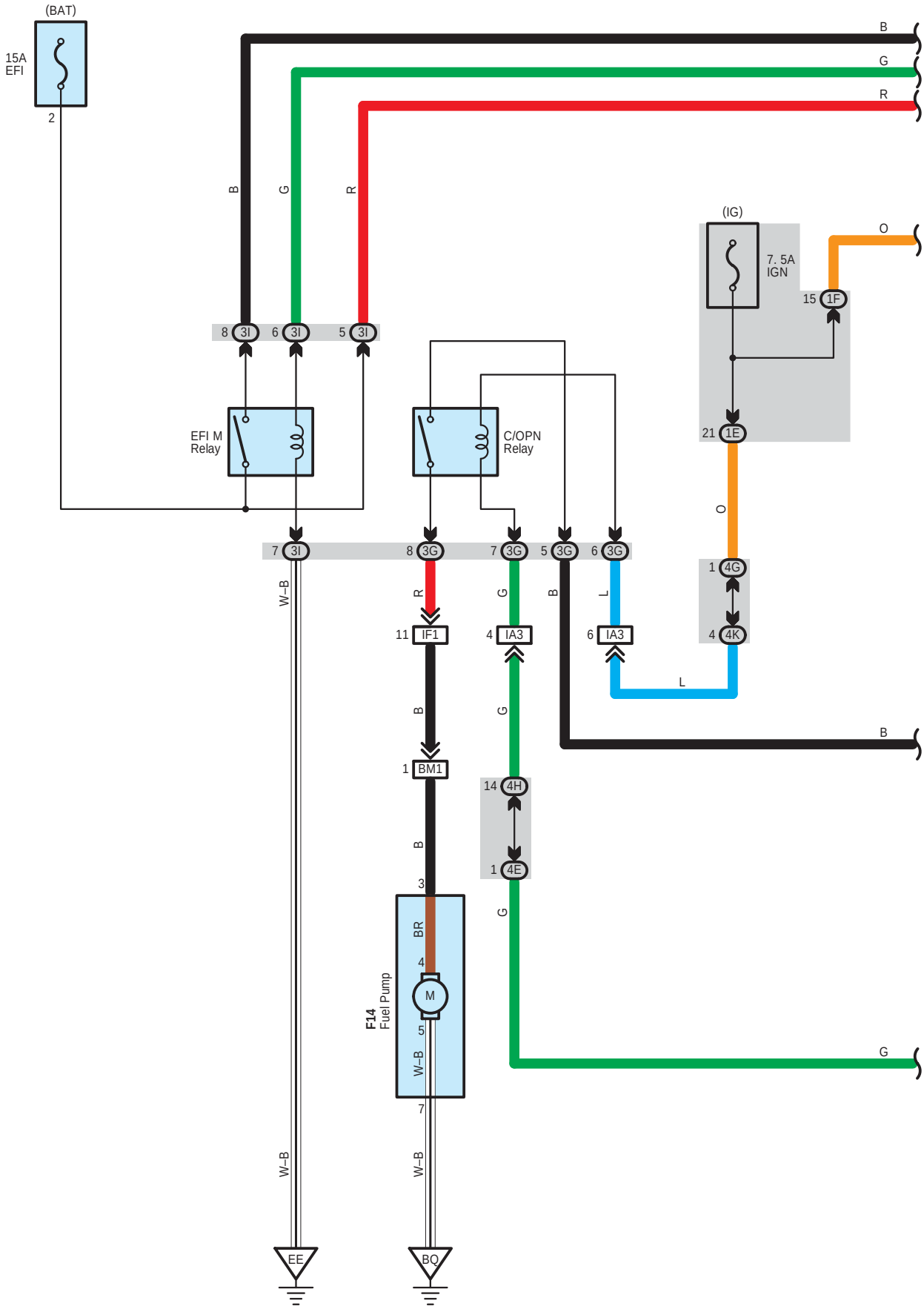

cardiagn.com

[Details of Engine Control Module Section]

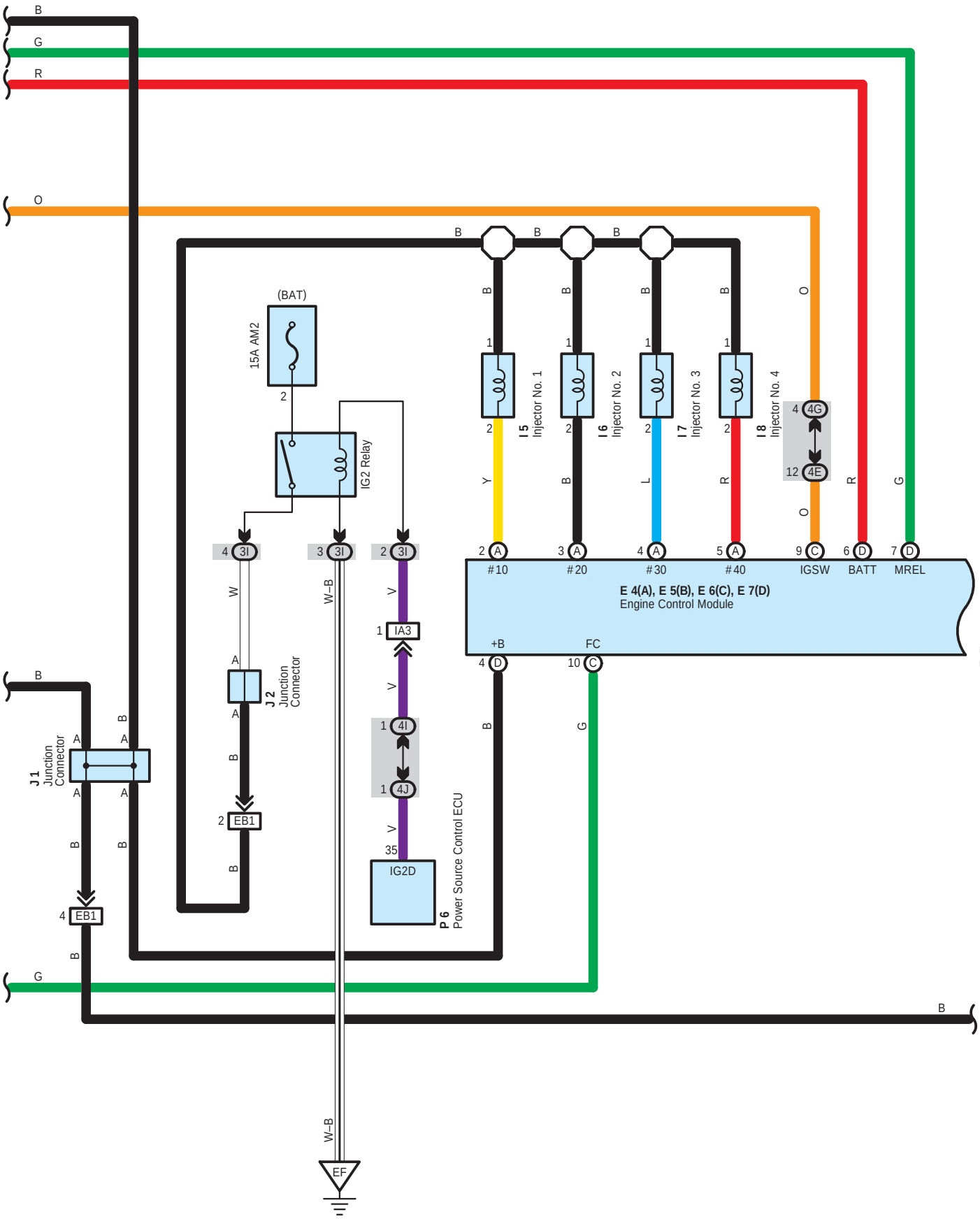

cardiagn.com

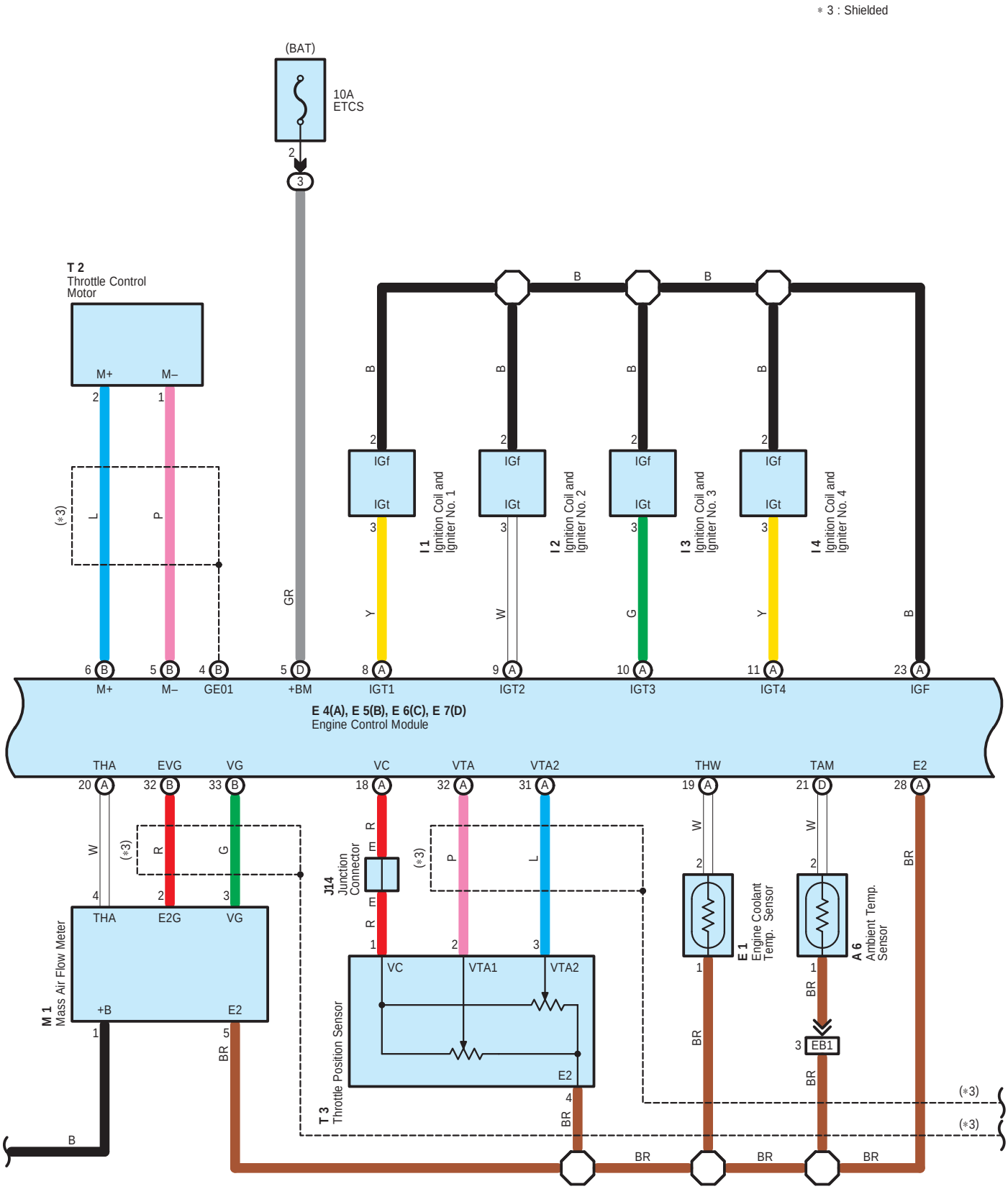

cardiagn.com

[Details of Engine Control Module Section]

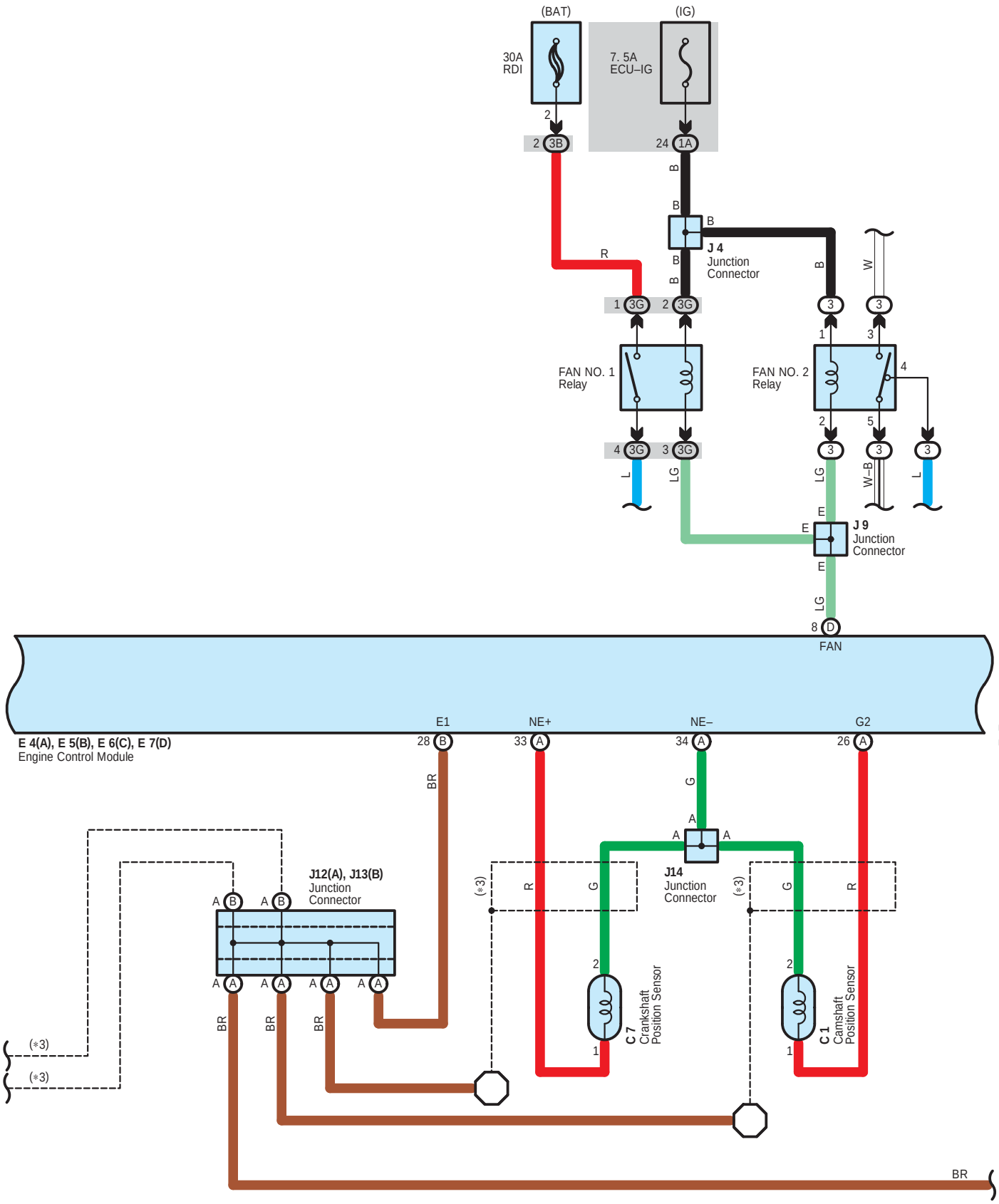

cardiagn.com

* 3 : Shielded

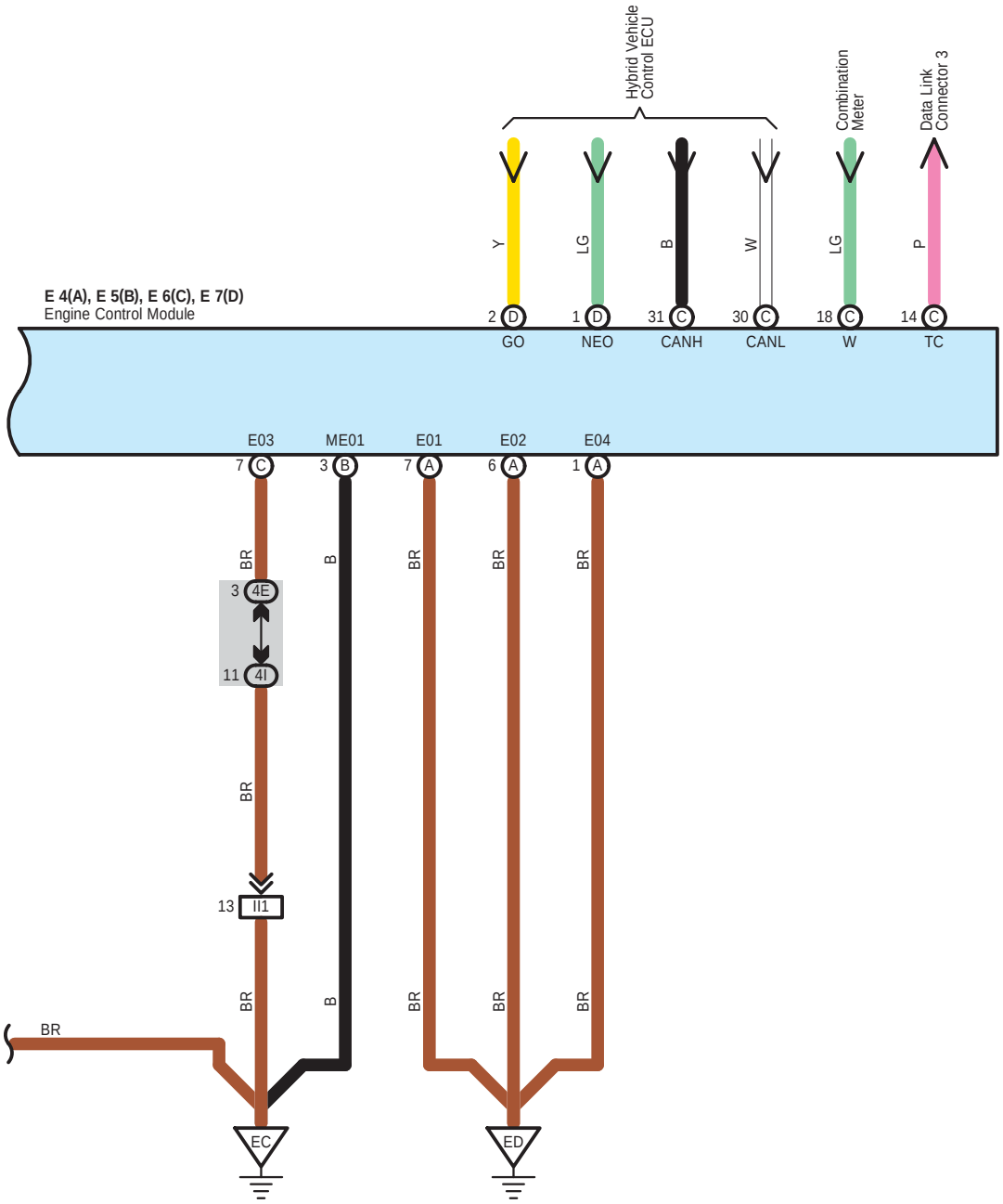

cardiagn.com

[Details of Skid Control ECU Section]

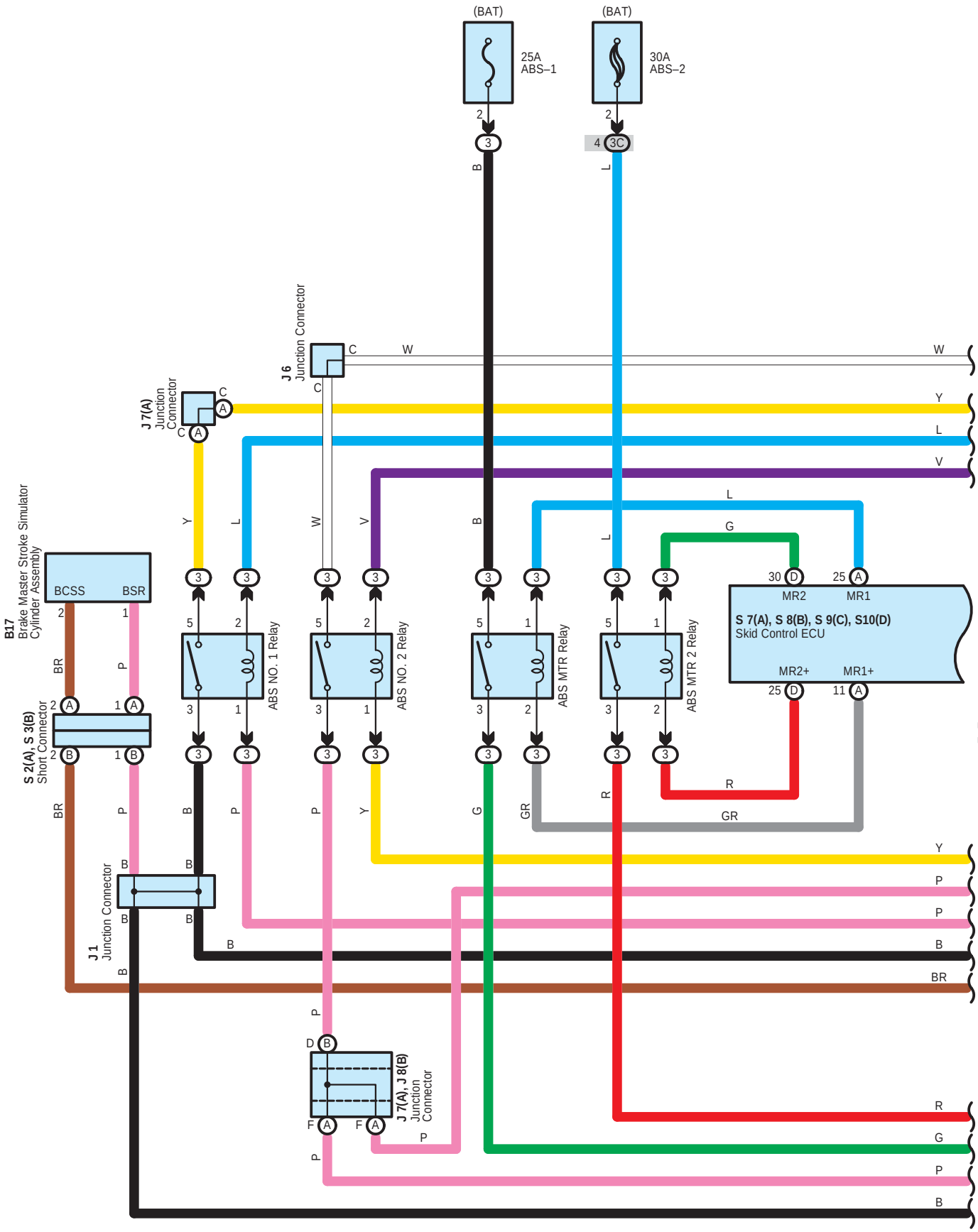

cardiagn.com

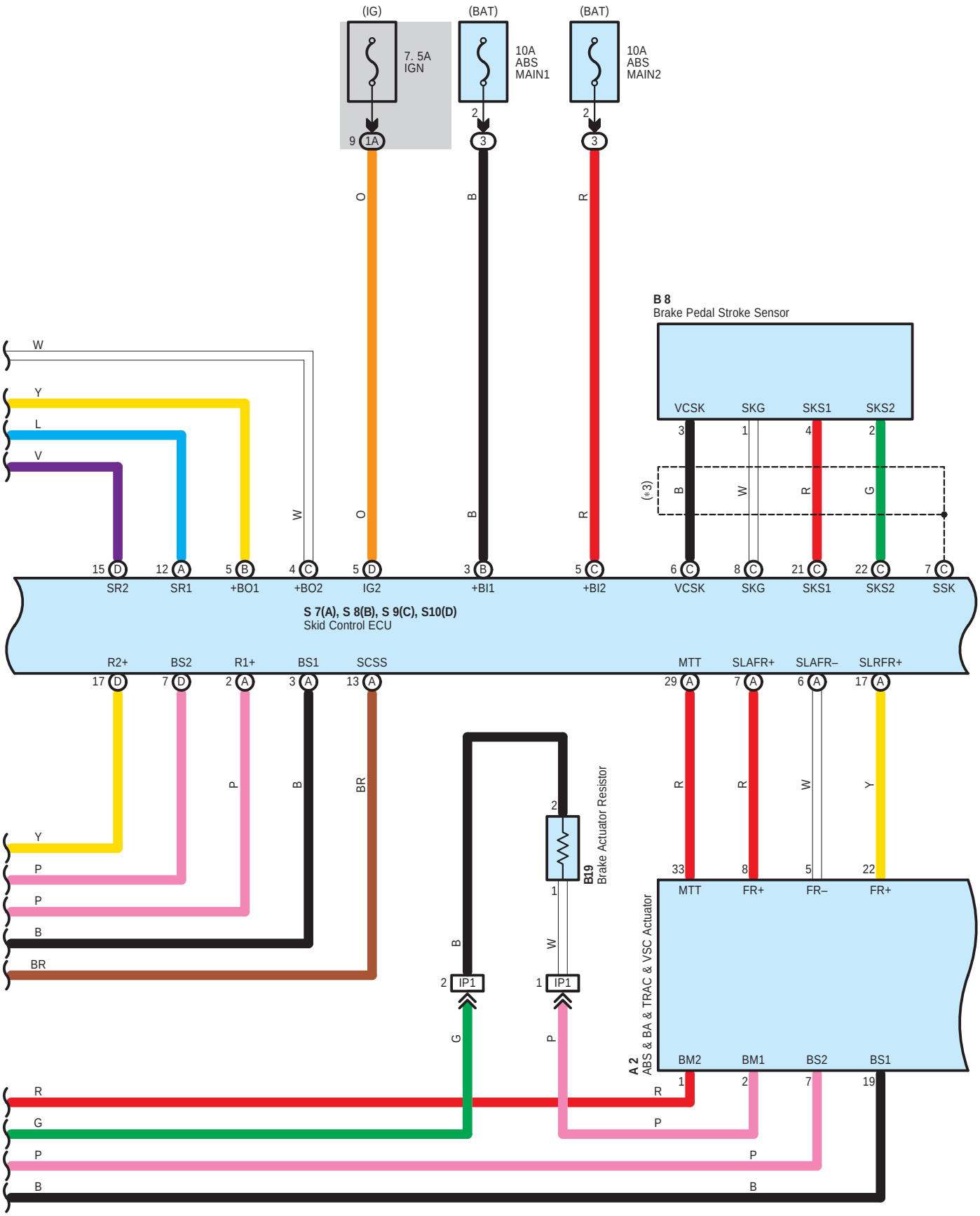

cardiagn.com

[Details of Skid Control ECU Section]

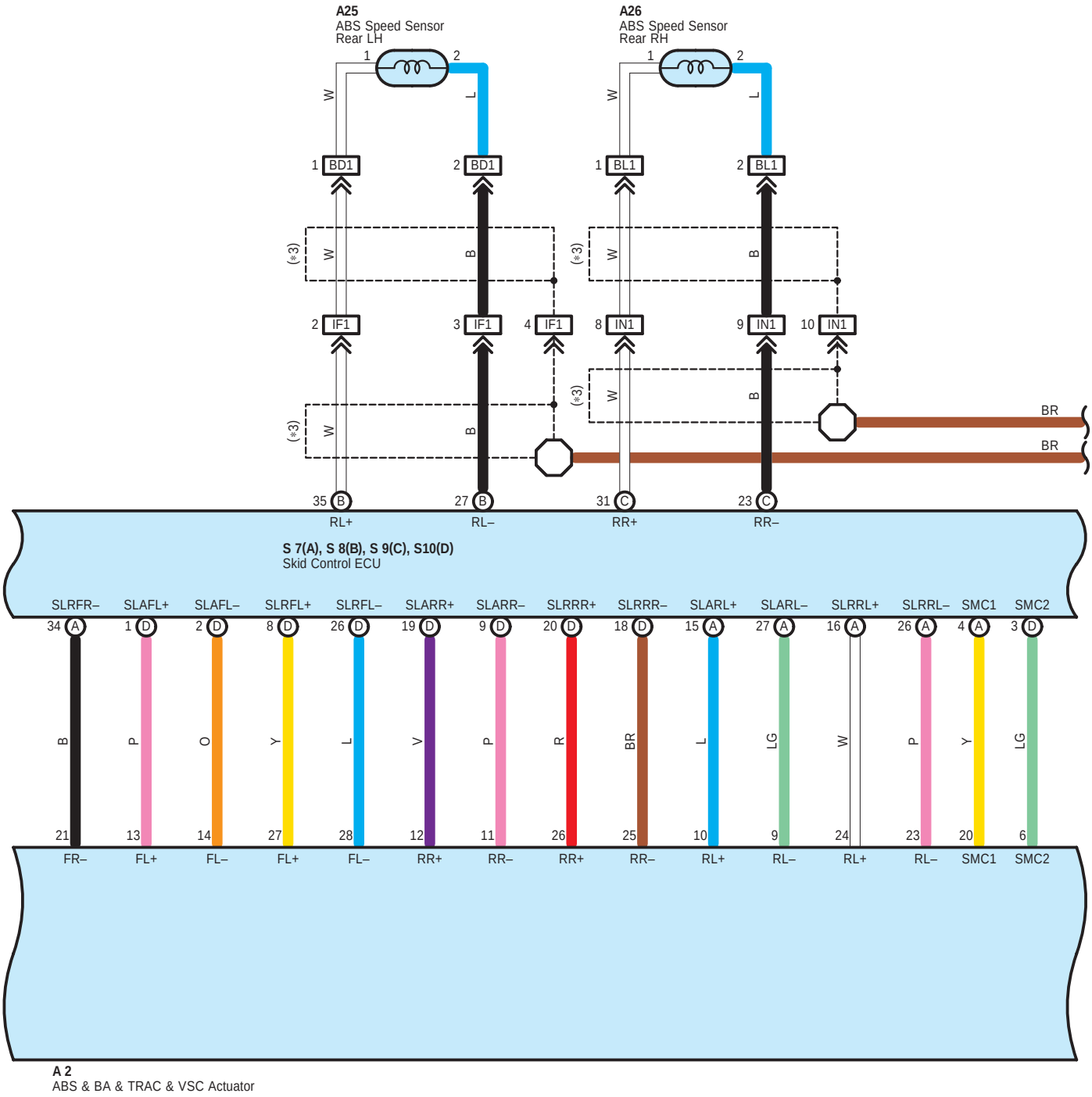

cardiagn.com

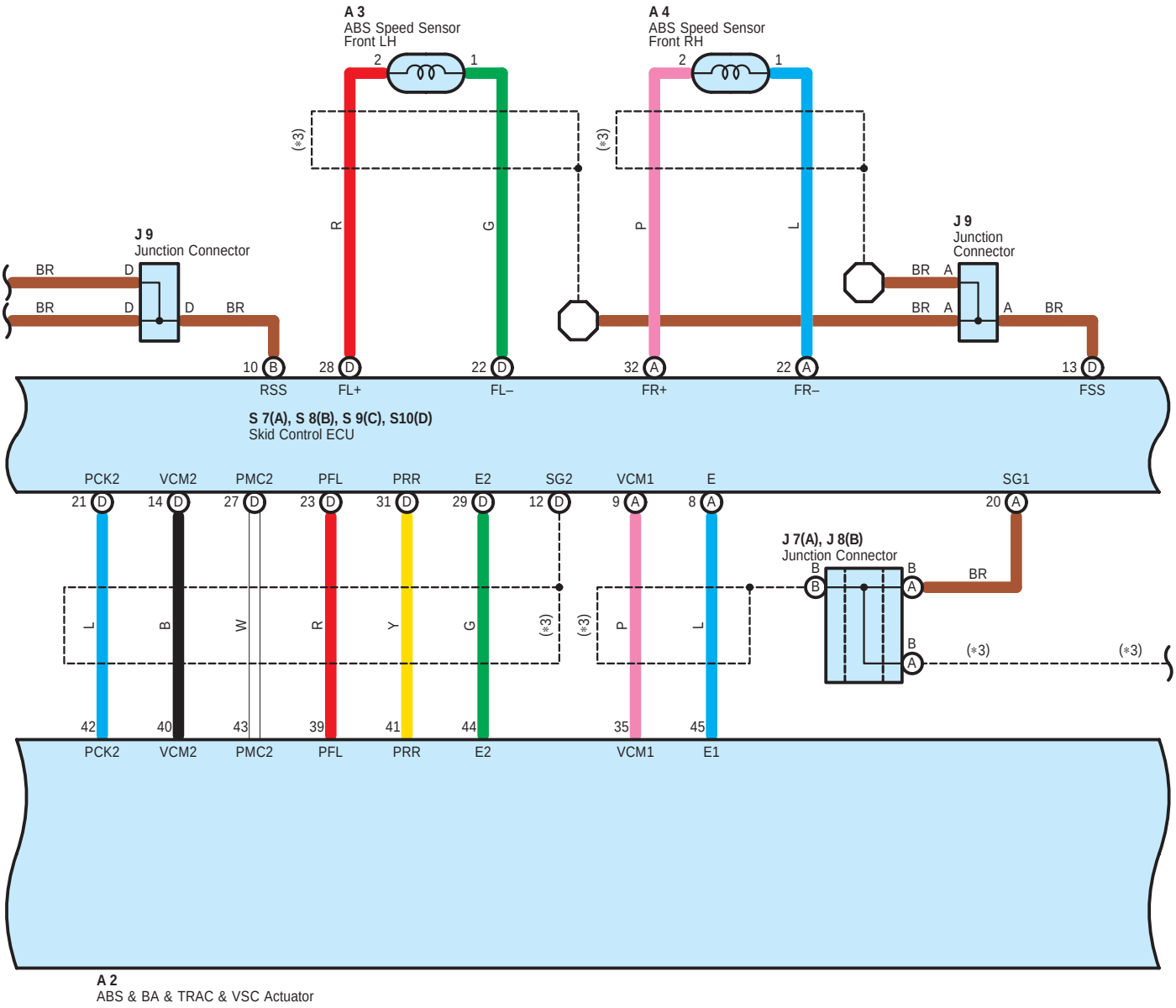

cardiagn.com

[Details of Skid Control ECU Section]

∗ 3 : Shielded

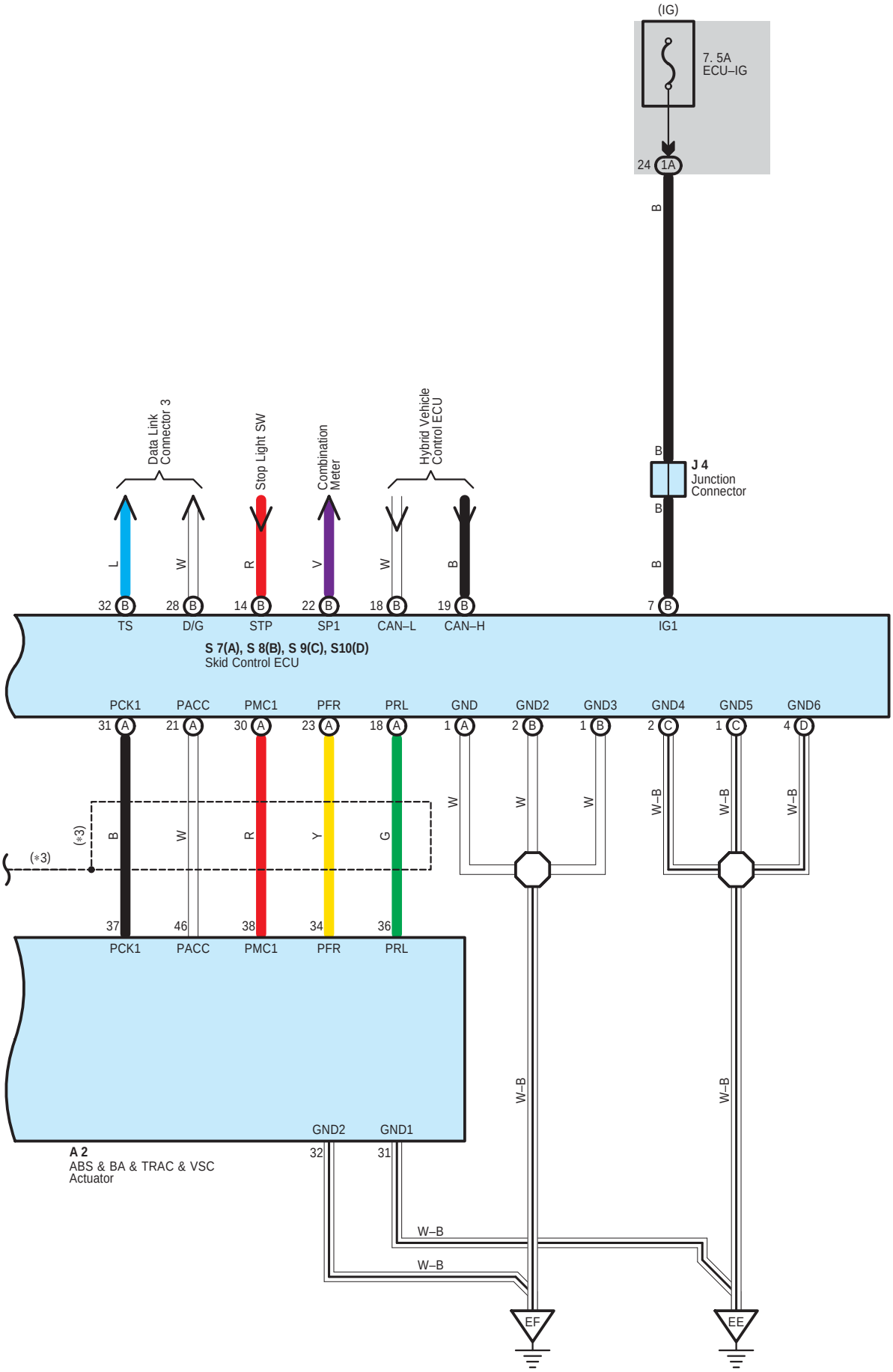

cardiagn.com

System Outline

This system controls the following modes in order to achieve the most efficient operations to match the driving conditions.

1. Motor Generator Condition

(1) Supply of electrical power from the HV battery to motor generator no.2 provides force to drive the wheels.

(2) While the tires are driven by the engine via the planetary gears, motor generator no.1 activates to supply electricity via the planetary gears to motor generator no.2 to drive the wheels.

(3) When the vehicle is decelerating, kinetic energy from the wheels is recovered into electrical energy and used to recharge the HV battery by motor generator no.2.

The hybrid vehicle control ECU switches between these modes (1, 2, 1+2, or 3) according to the driving conditions. However, when the state of charge of the HV battery is low, the HV battery is charged by the engine turning motor generator no.1.

2. Inverter

∗ The inverter converts high–voltage direct current of HV battery to three–phase alternating current for driving motor generator no.1 and motor generator no.2.
∗ The activation of the power transistors is controlled by the HV ECU. In addition, the inverter transmits necessary information for current control, such as the output amperage or voltage, to the HV ECU.
∗ Along with motor generator no.1 and motor generator no.2, the inverter is cooled by the exclusive radiator of the coolant system that is separated from that of the engine.
∗ In vehicle collision, circuit breaker sensor installed in the inverter outputs collision signal to stop the system.
∗ Boost converter has been adopted in the inverter, which increases rated voltage output from HV battery of DC 201.6V to DC 500V. After increasing voltage, the inverter converts direct current to alternating current.

3. Converter

The power source for auxiliary equipment of the vehicle such as the lights, audio system, and the air conditioning system, as well as the ECUs, is based on a rated voltage of DC 12V system. Because the generator outputs at DC 201.6V, the converter is used to transform the voltage from rated voltage of DC 201.6V to DC 12V in order to recharge the auxiliary battery. The converter is installed on the underside of the inverter.

4. HV Battery

∗ In Prius, the sealed nickel hydride (Ni–MH) battery has been adopted. This HV battery has high power density, lightweight and longevity to match characteristics of TOYOTA hybrid system. Because TOYOTA hybrid system controls charge/discharge to maintain charge/discharge control to maintain SOC (State of charge) at constant level while the vehicle is operating normally, it does not have to rely on the use of external recharges.
∗ The HV battery, battery ECU, system main relay and the cooling fan are put in a signal case which is placed in the luggage compartment behind the rear seat to make more effective use of vehicle space.
∗ A service plug that shuts off circuit is provided in the middle of the 28 modules (Rated battery capacity = 201.6V). Before servicing any portion of the high–voltage circuits, make sure to remove the service plug.
Please do not READY ON when you remove the service plug. There is a possibility that battery ECU breaks down.
∗ To ensure the HV battery's performance, the battery ECU controls the operation of the cooling fan to avoid the heat that is generated in the HV battery during charging and discharging.

5. Regenerative System Operation

This system operates the motor as a generator to change the kinetic energy of the vehicle into the electricity when accel pedal is released or foot braking decelerates the vehicle speed, and store the electricity in the battery.

cardiagn.com

○ : **Parts Location**

Code		See Page	Code		See Page	Code		See Page
A2		46	H16	C	49	M1		47
A3		46	H17	D	49	M2	A	47
A4		46	H20	D	53	M3	B	47
A6		46	H21	E	53	M4	C	47
A7	A	48	I1		47	M5	D	47
A8	B	48	I2		47	M6	A	47
A9		48	I3		47	M7	B	47
A13		48	I4		47	M8	C	47
A18		48	I5		47	M9	D	47
A25		52	I6		47	M10	E	47
A26		52	I7		47	M13		50
B5	A	48	I8		47	P6		51
B8		48	I9	A	47	P8		51
B9		52	I10	B	47	P11		51
B10		52	I12	D	47	S1		47
B11	A	52	I13	E	47	S2	A	47
B12	B	52	I14	G	47	S3	B	47
B13	C	52	I15	H	47	S4	A	51
B14		52	I16	I	47	S5	B	51
B17		46	I17		53	S7	A	51
B19		48	J1		47	S8	B	51
C1		46	J2		47	S9	C	51
C3		46	J3		47	S10	D	51
C5	A	46	J4		47	S11		51
C6	B	46	J5		50	S16		51
C7		46	J6		50	S22	A	55
C10		49	J7	A	50	S23	B	55
D1		49	J8	B	50	S24	C	55
D7		52	J9		50	S25	D	55
E1		46	J12	A	50	S26	E	55
E4	A	49	J13	B	50	S27	A	47
E5	B	49	J14		50	S28	B	47
E6	C	49	J15		50	T2		47
E7	D	49	J16		50	T3		47
F14		53	J17		50	T4		51
F15	A	28, 53	J18		50	T5		51
F16	B	28, 53	J24		50	T11		51
G1		49	J25		50	W3		47
H14	A	49	J30		53			
H15	B	49	J32		53			

▭ : **Relay Blocks**

Code	See Page	Relay Blocks (Relay Block Location)
3	22	Engine Room R/B (Engine Compartment Left)

cardiagn.com

: **Junction Block and Wire Harness Connector**

Code	See Page	Junction Block and Wire Harness (Connector Location)
1A	30	Engine Room Main Wire and Driver Side J/B (Lower Finish Panel)
1C		
1D	30	Floor Wire and Driver Side J/B (Lower Finish Panel)
1E	30	Instrument Panel Wire and Driver Side J/B (Lower Finish Panel)
1F		
1G		
1L	31	
1M		
1N		
3B	23	Engine Room Main Wire and Engine Room J/B (Engine Compartment Left)
3C		
3E		
3G	24	
3I		
3J		
3M	23	Frame Wire and Engine Room J/B (Engine Compartment Left)
4C	38	Instrument Panel Wire and Center Connector No.1 (Behind the Combination Meter)
4D		
4E		
4F		
4G		
4H		
4I		
4J		
4K		
4L		
5C	42	Instrument Panel Wire and Center Connector No.2 (Instrument Panel Brace RH)
5D		
5E		
5F		
5G		
5H		
5J		
5K		
5L		
5M		
5N		

cardiagn.com

: Connector Joining Wire Harness and Wire Harness

Code	See Page	Joining Wire Harness and Wire Harness (Connector Location)
EB1	56	Engine Wire and Engine Room Main Wire (Inside of the Engine Room R/B)
IA1	58	Engine Room Main Wire and Instrument Panel Wire (Upper Parts of Front Body Pillar LH)
IA2		
IA3		
IC1	58	Engine Room Main Wire and Floor Wire (Cowl Side Panel LH)
ID3	58	Instrument Panel Wire and Floor Wire (Left Kick Panel)
ID4		
IF1	58	Floor Wire and Engine Room Main Wire (Left Kick Panel)
IG1	59	Instrument Panel Wire and Instrument Panel No.2 Wire (Behind the Combination Meter)
IG2		
II1	59	Engine Wire and Instrument Panel Wire (Behind the Glove Box)
IN1	59	Floor No.2 Wire and Engine Room Main Wire (Right Kick Panel)
IP1	59	Engine Room No.2 Wire and Engine Room Main Wire (Upper Parts of Front Body Pillar LH)
BD1	60	Skid Control Sensor No.1 Wire and Floor Wire (Front Side of Left Quarter Panel)
BE1	60	Frame Wire and Floor No.2 Wire (Front Side of Left Quarter Panel)
BL1	61	Skid Control Sensor No.2 Wire and Floor No.2 Wire (Front Side of Right Quarter Panel)
BM1	61	Floor No.2 Wire and Floor Wire (Rear Side of Right Quarter Panel)

: Ground Points

Code	See Page	Ground Points Location
EC	56	Engine Block
ED		
EE	56	Left Side of the Suspension Tower
EF		
IH	58	Cowl Side Panel LH
II	58	Instrument Panel Brace LH
IK	58	Cowl Side Panel RH
BL	60	Rear Side of Left Quarter Panel
BQ	60	Rear Side of Right Quarter Panel

cardiagn.com

cardiagn.com

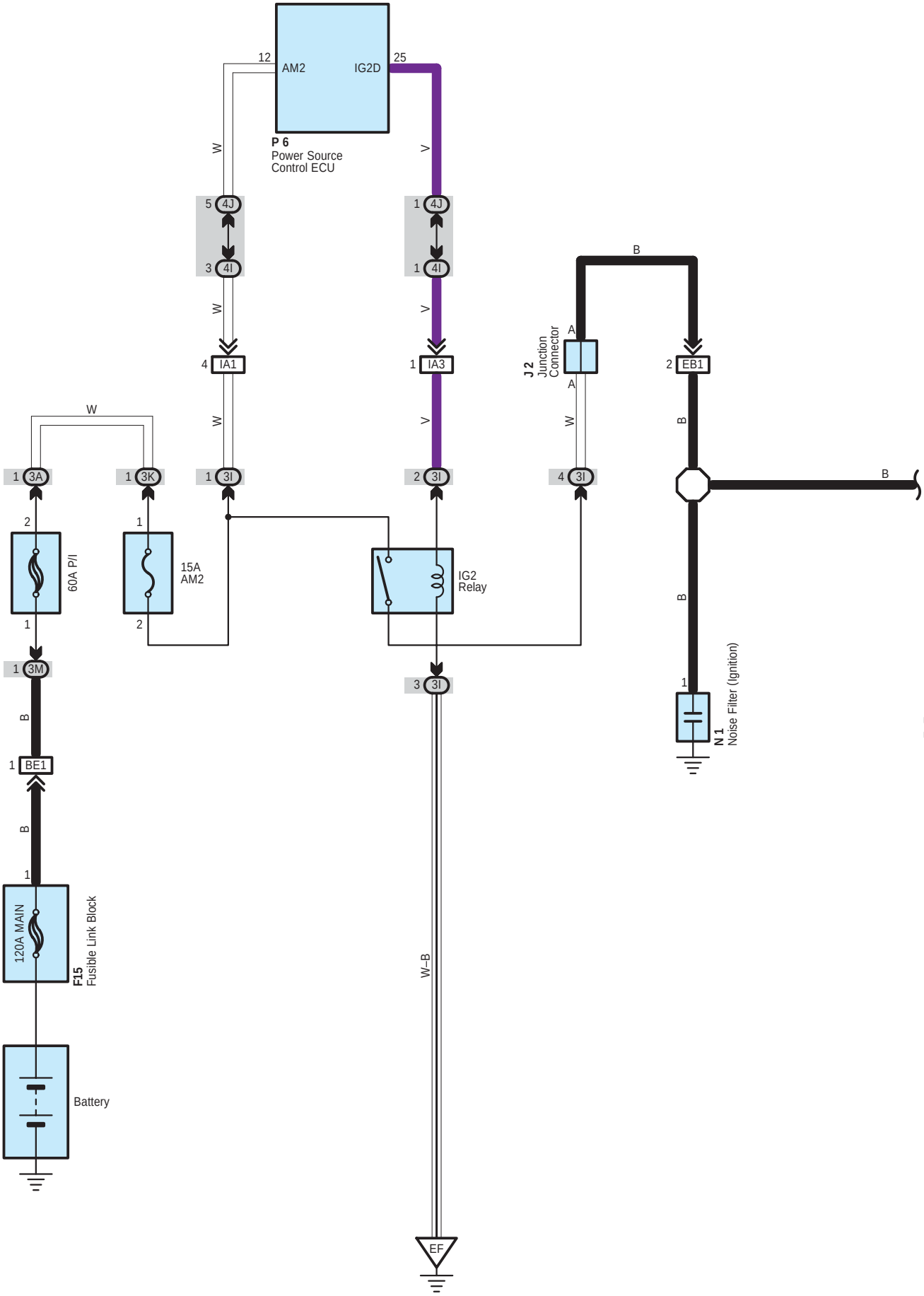

cardiagn.com

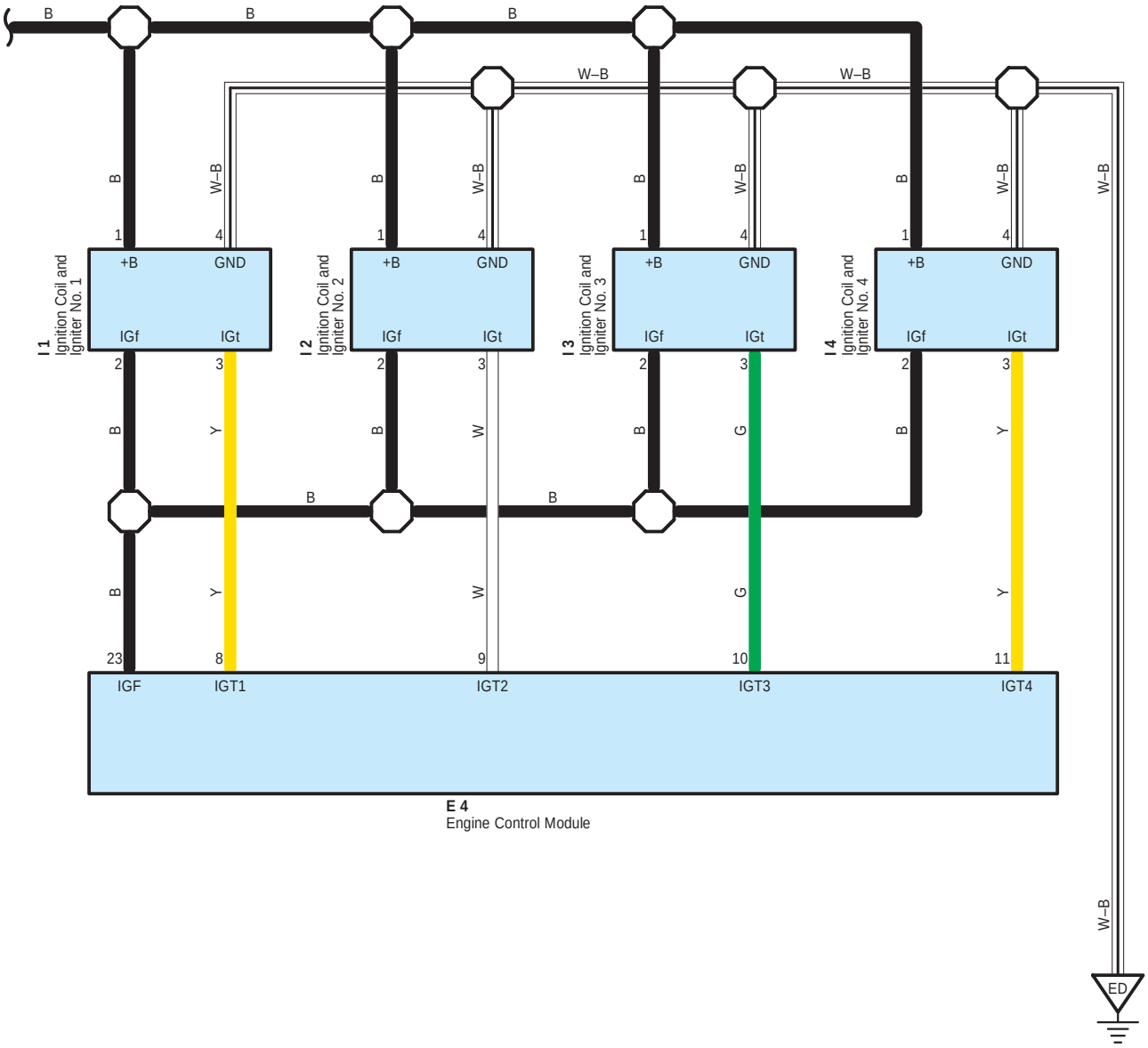

cardiagn.com

○ : **Parts Location**

Code	See Page	Code	See Page	Code	See Page
E4	49	I2	47	J2	47
F15	28, 53	I3	47	N1	47
I1	47	I4	47	P6	51

: **Junction Block and Wire Harness Connector**

Code	See Page	Junction Block and Wire Harness (Connector Location)
3A	23	Engine Room Main Wire and Engine Room J/B (Engine Compartment Left)
3I	24	
3K		
3M	23	Frame Wire and Engine Room J/B (Engine Compartment Left)
4I	38	Instrument Panel Wire and Center Connector No.1 (Behind the Combination Meter)
4J		

: **Connector Joining Wire Harness and Wire Harness**

Code	See Page	Joining Wire Harness and Wire Harness (Connector Location)
EB1	56	Engine Wire and Engine Room Main Wire (Inside of the Engine Room R/B)
IA1	58	Engine Room Main Wire and Instrument Panel Wire (Upper Parts of Front Body Pillar LH)
IA3		
BE1	60	Frame Wire and Floor No.2 Wire (Front Side of Left Quarter Panel)

: **Ground Points**

Code	See Page	Ground Points Location
ED	56	Engine Block
EF	56	Left Side of the Suspension Tower

cardiagn.com

cardiagn.com

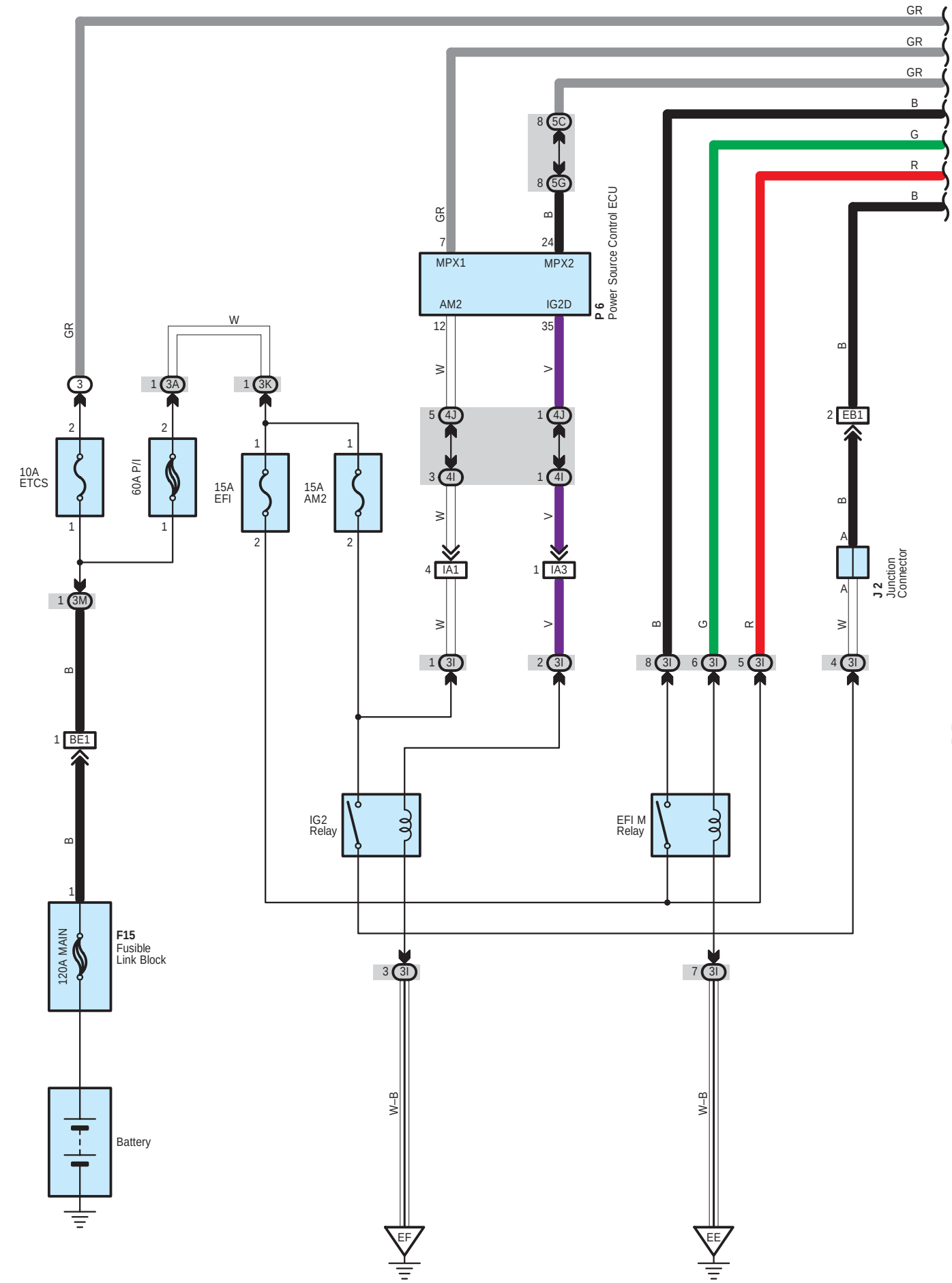

cardiagn.com

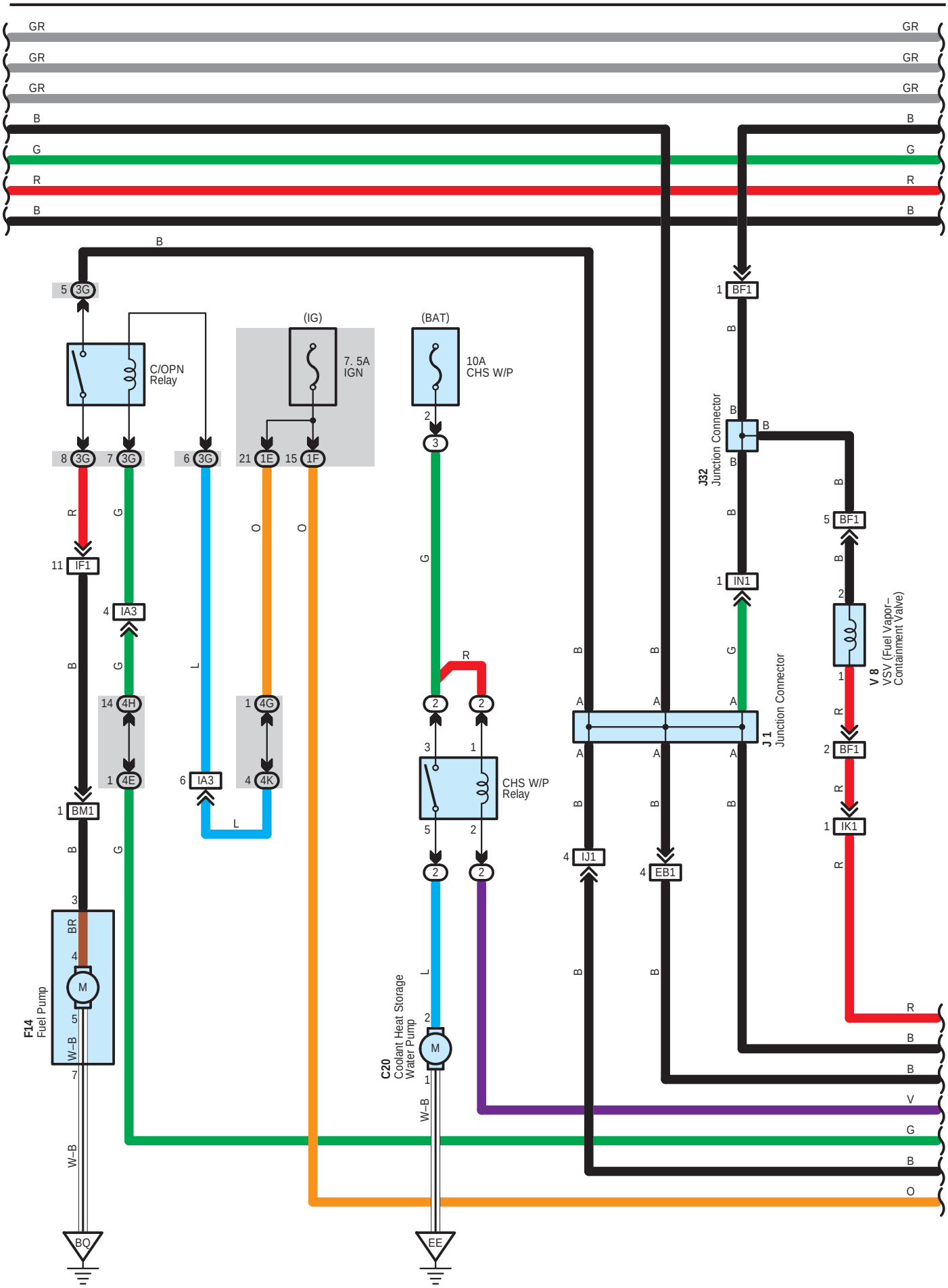

cardiagn.com

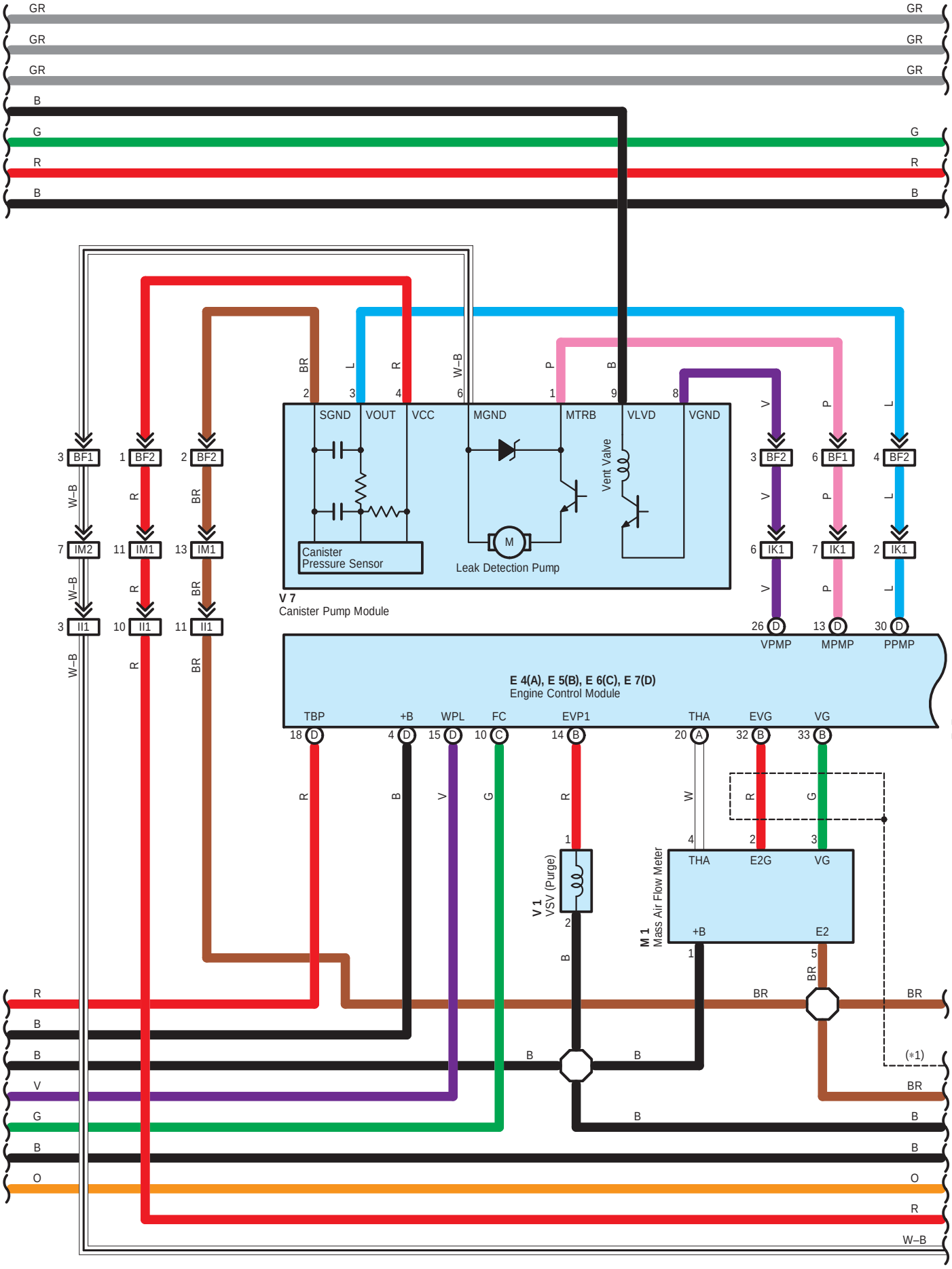

cardiagn.com

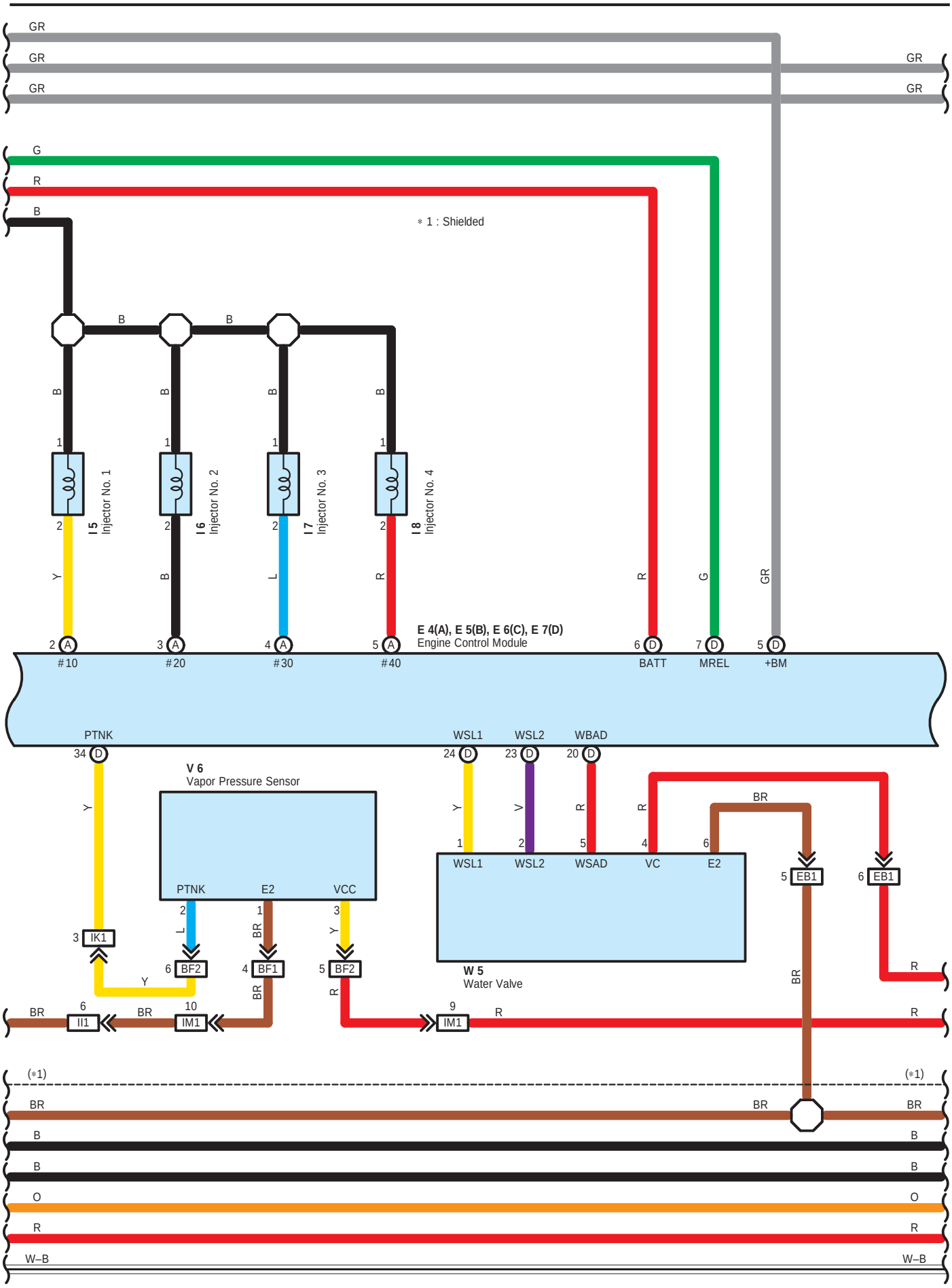

cardiagn.com

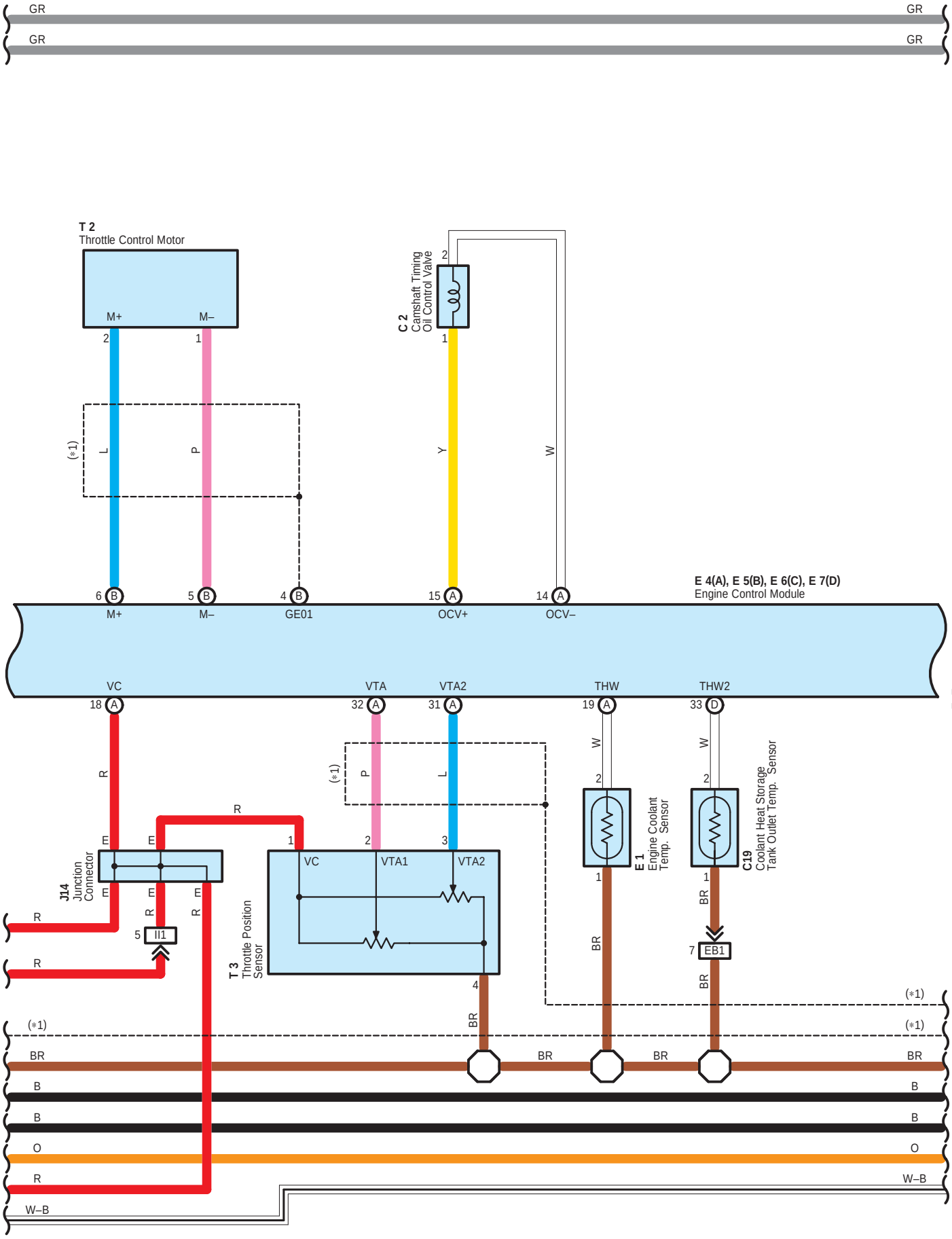

cardiagn.com

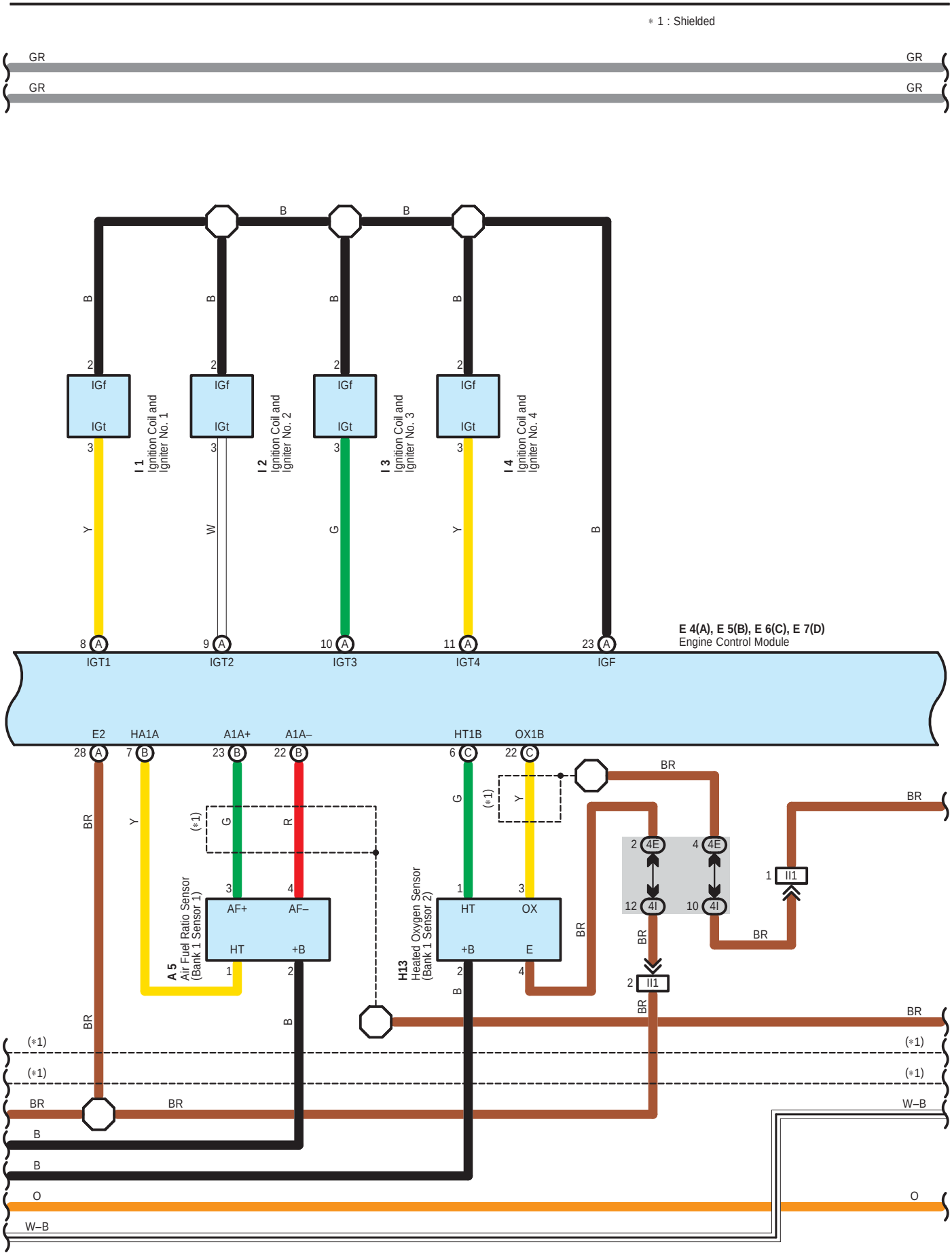

cardiagn.com

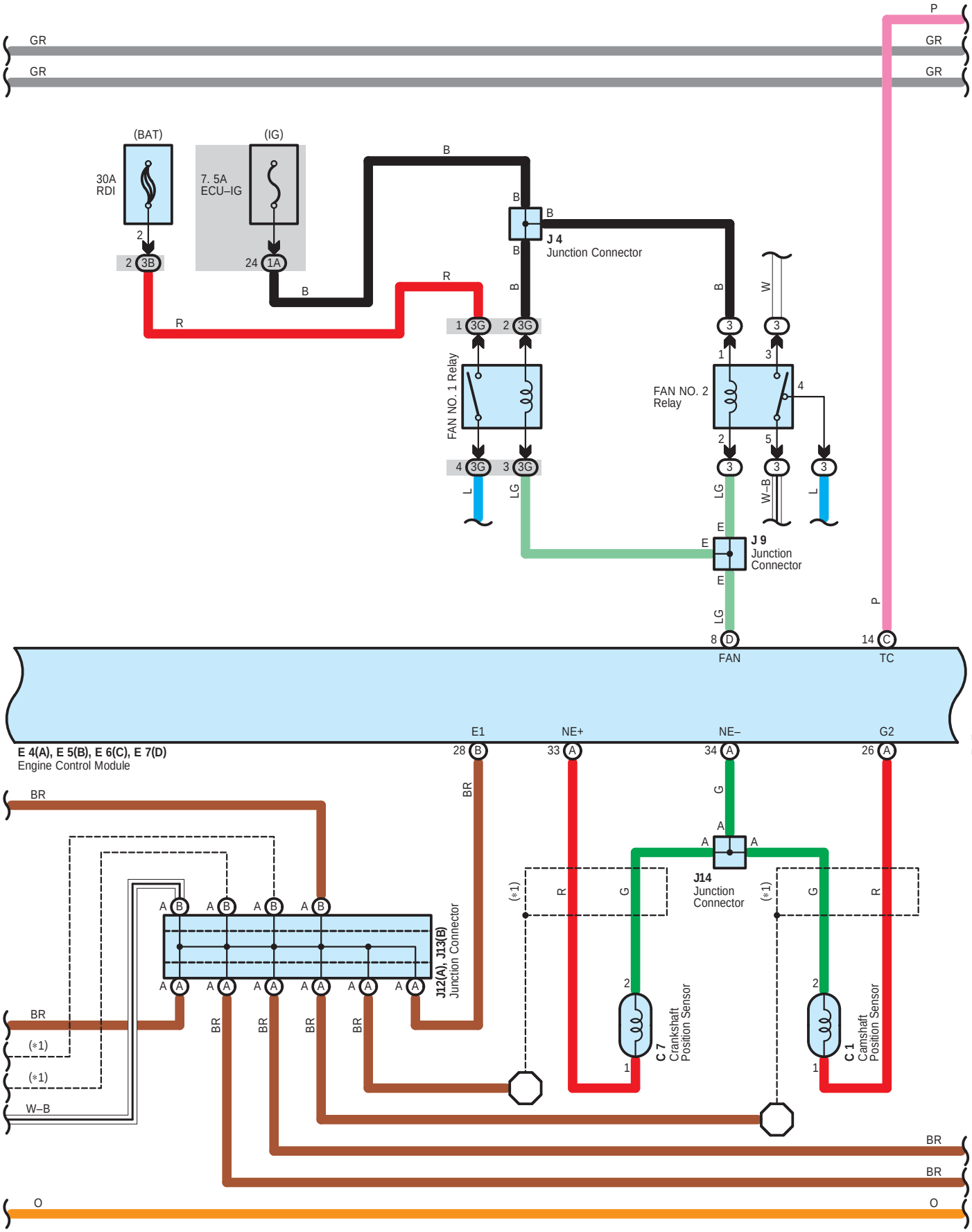

cardiagn.com

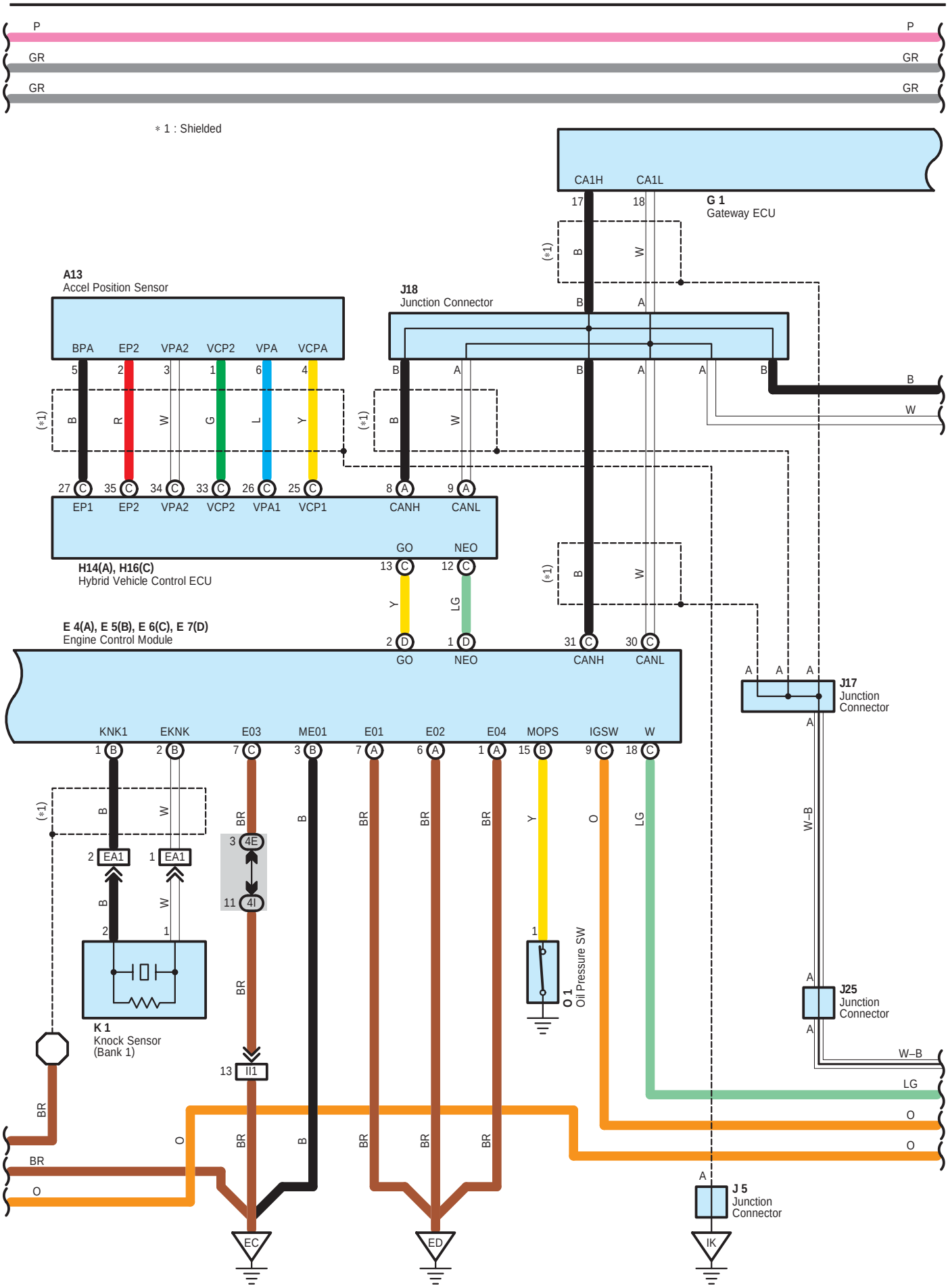

cardiagn.com

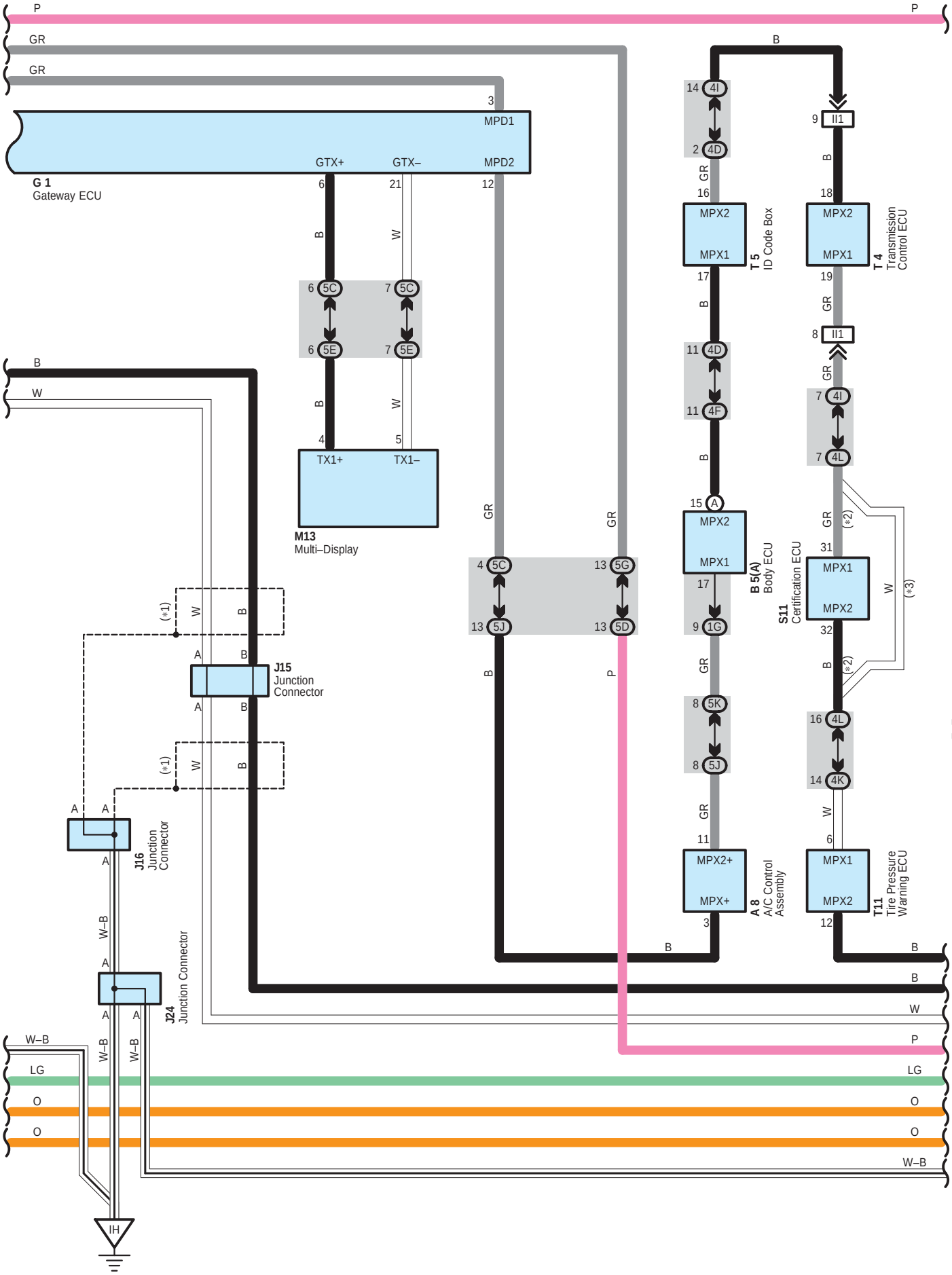

cardiagn.com

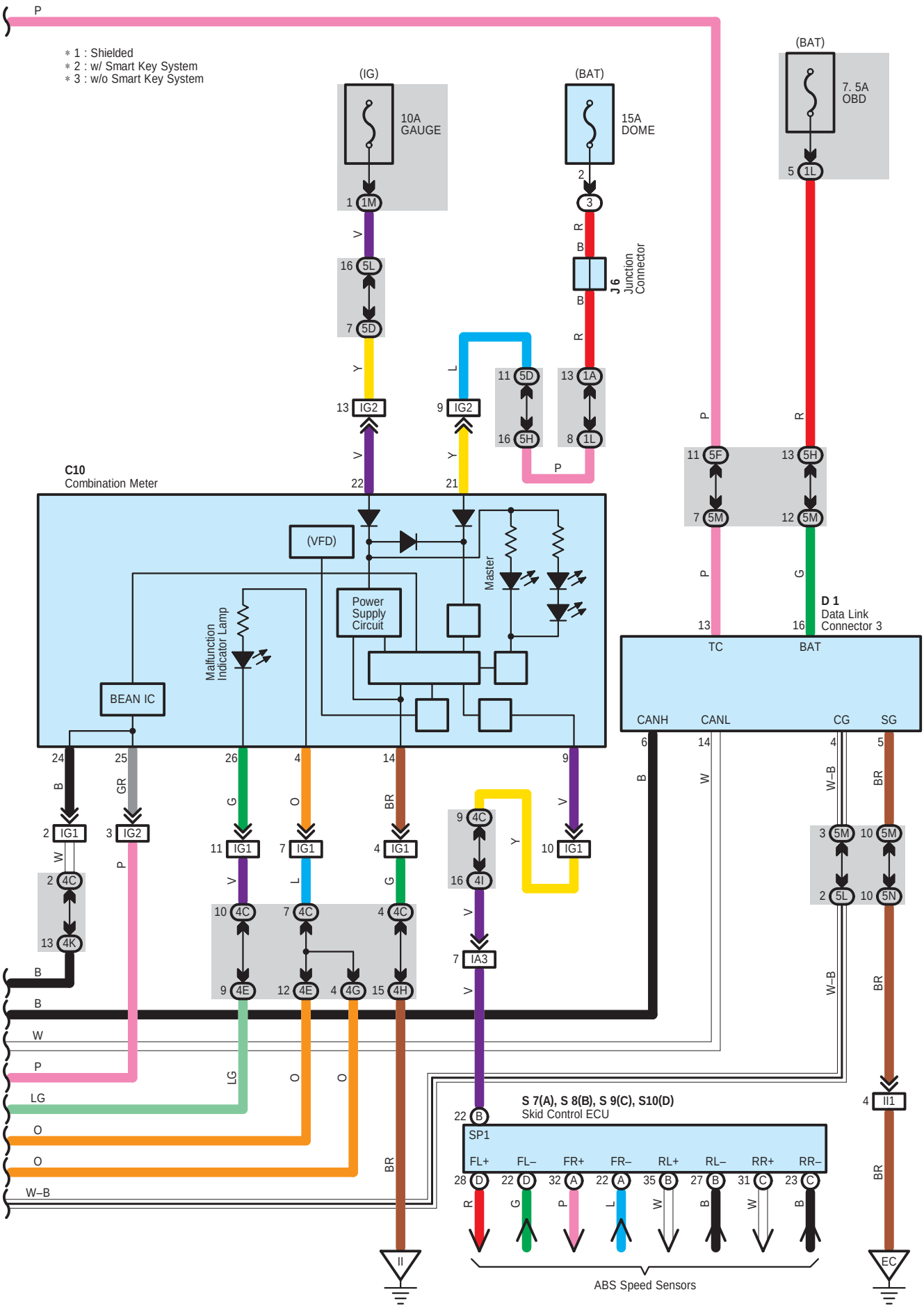

cardiagn.com

System Outline

The engine control system utilizes a microcomputer and maintains overall control of the engine, transmission etc. An outline of the engine control is given here.

1. Input Signals

(1) Engine coolant temp. signal circuit
The engine coolant temp. sensor detects the engine coolant temp. and has a built–in thermistor with a resistance which varies according to the engine coolant temp. The engine coolant temp. is input into TERMINAL THW of the engine control module as a control signal.

(2) Intake air temp. signal circuit
The intake air temp. sensor is installed in the mass air flow meter and detects the intake air temp., which is input to TERMINAL THA of the engine control module as a control signal.

(3) Oxygen sensor signal circuit
The oxygen density in the exhaust emission is detected and is input from the heated oxygen sensors to TERMINAL OX1B of the engine control module as a control signal.

(4) RPM signal circuit
The camshaft position is detected by the camshaft position sensor, and is input into TERMINAL G2 of the engine control module as a control signal. Also, the engine RPM is detected by the crankshaft position sensor and the signal is input into TERMINAL NE+ of the engine control module.

(5) Throttle position sensor signal circuit
The throttle position sensor detects the throttle valve opening angle as a control signal, which is input into TERMINALS VTA and VTA2 of the engine control module.

(6) Vehicle speed signal circuit
ABS speed sensor detects vehicle speed and the speed signal is input from skid control ECU to engine control module.

(7) Battery signal circuit
Voltage is constantly applied to TERMINAL BATT of the engine control module. When the power SW is pushed on, the voltage for engine control module starts up power supply which is applied through the EFI M relay, to TERMINAL +B of the engine control module. The current from the IGN fuse flows to TERMINAL IGSW of the engine control module, and voltage is constantly applied to TERMINAL +BM.

(8) Intake air volume signal circuit
The intake air volume is detected by the mass air flow meter, and is input to TERMINAL VG of the engine control module as a control signal.

(9) Water temp. (CHS) signal circuit
The water temp. (CHS) sensor detects the water temp. (CHS) and has a built–in thermistor with a resistance which varies according to the water temp. (CHS). The water temp. (CHS) is input into TERMINAL THW2 of the engine control module as a control signal.

(10) Engine knock signal circuit
Engine knocking is detected by the knock sensor, and is input into TERMINAL KNK1 of the engine control module as a control signal.

(11) Air fuel ratio signal circuit
The air fuel ratio is detected and input into TERMINAL A1A+ of the engine control module as a control signal.

cardiagn.com

2. Control System

∗ SFI system
The SFI system monitors the engine condition through the signals input from each sensors to the engine control module. The control signal is sent to the engine control module TERMINALS #10, #20, #30 and #40 to operate the injector (Fuel injection). The SFI system controls the fuel injection with the engine control module according to the driving conditions.

∗ ESA system
The ESA system monitors the engine condition through the signals input from each sensors to the engine control module. The best ignition timing is decided according to this data and the data stored in the engine control module. The control signal is output to TERMINALS IGT1, IGT2, IGT3 and IGT4, and these signals control the igniter to provide the best ignition timing.

∗ Heater control system of heated oxygen sensor
The heater control system of heated oxygen sensor turns the heater on when the intake air volume is low (Temp. of exhaust emission is low), and warms up the heated oxygen sensors to improve their detecting performance. The engine control module evaluates the signals from each sensors, and outputs current to TERMINAL HT1B to control the heater.

∗ Heater control system of air fuel ratio sensor
The heater control system of air fuel ratio sensor turns the heater on when the intake air volume is low (Temp. of exhaust emission is low), and warms up the air fuel ratio sensor to improve detecting performance of the sensor.
The engine control module evaluates the signals from each sensor, current is output to TERMINAL HA1A, controlling the heater.

∗ Fuel pump control system
The engine control module supplies current to TERMINAL FC, and controls the operation of the fuel pump with the C/OPN relay.

∗ VVT–i
VVT–i controls the intake camshaft to optimal valve timing in accordance with the engine condition.

∗ CHS system
Engine control module controls CHS W/P relay to run electric pump to supply heated water stored in CHS tank to engine head. The electric pump stops when the water reaches certain temperature or certain time goes by. Warming engine head optimizes combustion conditions at engine start to reduce emission of incomplete combustion gas.

3. Diagnosis System

When there is malfunction in the engine control module signal system, the malfunctioning system is recorded in the memory. The system can be found by reading the code displayed on the malfunction indicator lamp.

4. Fail–Safe System

When malfunction has occurred in any system, there is possibility of engine trouble due to continuous control based on that system. In such a case, the fail–safe system either controls the system using the data (Standard values) recorded in the engine control module memory, or stops the engine.

cardiagn.com

: Parts Location

Code		See Page	Code		See Page	Code		See Page
A5		46	I1		47	J25		50
A8		48	I2		47	J32		53
A13		48	I3		47	K1		47
B5	A	48	I4		47	M1		47
C1		46	I5		47	M13		50
C2		46	I6		47	O1		47
C7		46	I7		47	P6		51
C10		49	I8		47	S7	A	51
C19		46	J1		47	S8	B	51
C20		46	J2		47	S9	C	51
D1		49	J4		47	S10	D	51
E1		46	J5		50	S11		51
E4	A	49	J6		50	T2		47
E5	B	49	J9		50	T3		47
E6	C	49	J12	A	50	T4		51
E7	D	49	J13	B	50	T5		51
F14		53	J14		50	T11		51
F15		28, 53	J15		50	V1		47
G1		49	J16		50	V6		55
H13		49	J17		50	V7		55
H14	A	49	J18		50	V8		55
H16	C	49	J24		50	W5		47

: Relay Blocks

Code	See Page	Relay Blocks (Relay Block Location)
2	28	Engine Room R/B No.2 (Right Side of Reserve Tank)
3	22	Engine Room R/B (Engine Compartment Left)

cardiagn.com

: **Junction Block and Wire Harness Connector**

Code	See Page	Junction Block and Wire Harness (Connector Location)
1A	30	Engine Room Main Wire and Driver Side J/B (Lower Finish Panel)
1E	30	Instrument Panel Wire and Driver Side J/B (Lower Finish Panel)
1F		
1G		
1L	31	
1M		
3A	23	Engine Room Main Wire and Engine Room J/B (Engine Compartment Left)
3B		
3G	24	
3I		
3K		
3M	23	Frame Wire and Engine Room J/B (Engine Compartment Left)
4C	38	Instrument Panel Wire and Center Connector No.1 (Behind the Combination Meter)
4D		
4E		
4F		
4G		
4H		
4I		
4J		
4K		
4L		
5C	42	Instrument Panel Wire and Center Connector No.2 (Instrument Panel Brace RH)
5D		
5E		
5F		
5G		
5H		
5J		
5K		
5L		
5M		
5N		

cardiagn.com

: Connector Joining Wire Harness and Wire Harness

Code	See Page	Joining Wire Harness and Wire Harness (Connector Location)
EA1	56	Engine Wire and Engine No.4 Wire (Near the Radiator Fan)
EB1	56	Engine Wire and Engine Room Main Wire (Inside of the Engine Room R/B)
IA1	58	Engine Room Main Wire and Instrument Panel Wire (Upper Parts of Front Body Pillar LH)
IA3		
IF1	58	Floor Wire and Engine Room Main Wire (Left Kick Panel)
IG1	59	Instrument Panel Wire and Instrument Panel No.2 Wire (Behind the Combination Meter)
IG2		
II1	59	Engine Wire and Instrument Panel Wire (Behind the Glove Box)
IJ1	59	Engine Room Main Wire and Instrument Panel Wire (Behind the Glove Box)
IK1	59	Engine Room Main Wire and Floor No.2 Wire (Cowl Side Panel RH)
IM1	59	Instrument Panel Wire and Floor No.2 Wire (Right Kick Panel)
IM2		
IN1	59	Floor No.2 Wire and Engine Room Main Wire (Right Kick Panel)
BE1	60	Frame Wire and Floor No.2 Wire (Front Side of Left Quarter Panel)
BF1	60	Floor No.2 Wire and Fuel Tank Wire (Near the Fuel Tank)
BF2		
BM1	61	Floor No.2 Wire and Floor Wire (Rear Side of Right Quarter Panel)

: Ground Points

Code	See Page	Ground Points Location
EC	56	Engine Block
ED		
EE	56	Left Side of the Suspension Tower
EF		
IH	58	Cowl Side Panel LH
II	58	Instrument Panel Brace LH
IK	58	Cowl Side Panel RH
BQ	60	Rear Side of Right Quarter Panel

cardiagn.com

cardiagn.com

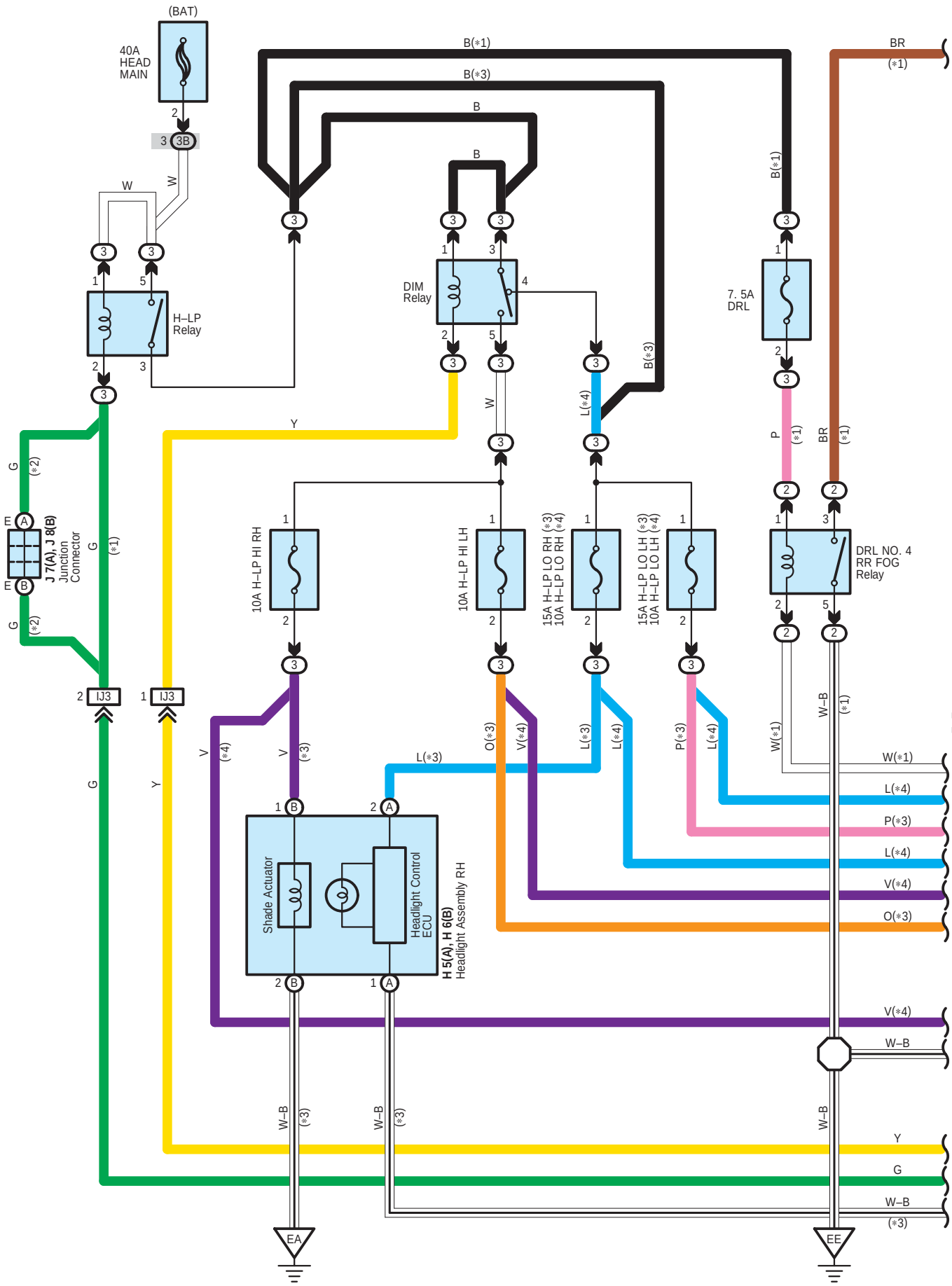

cardiagn.com

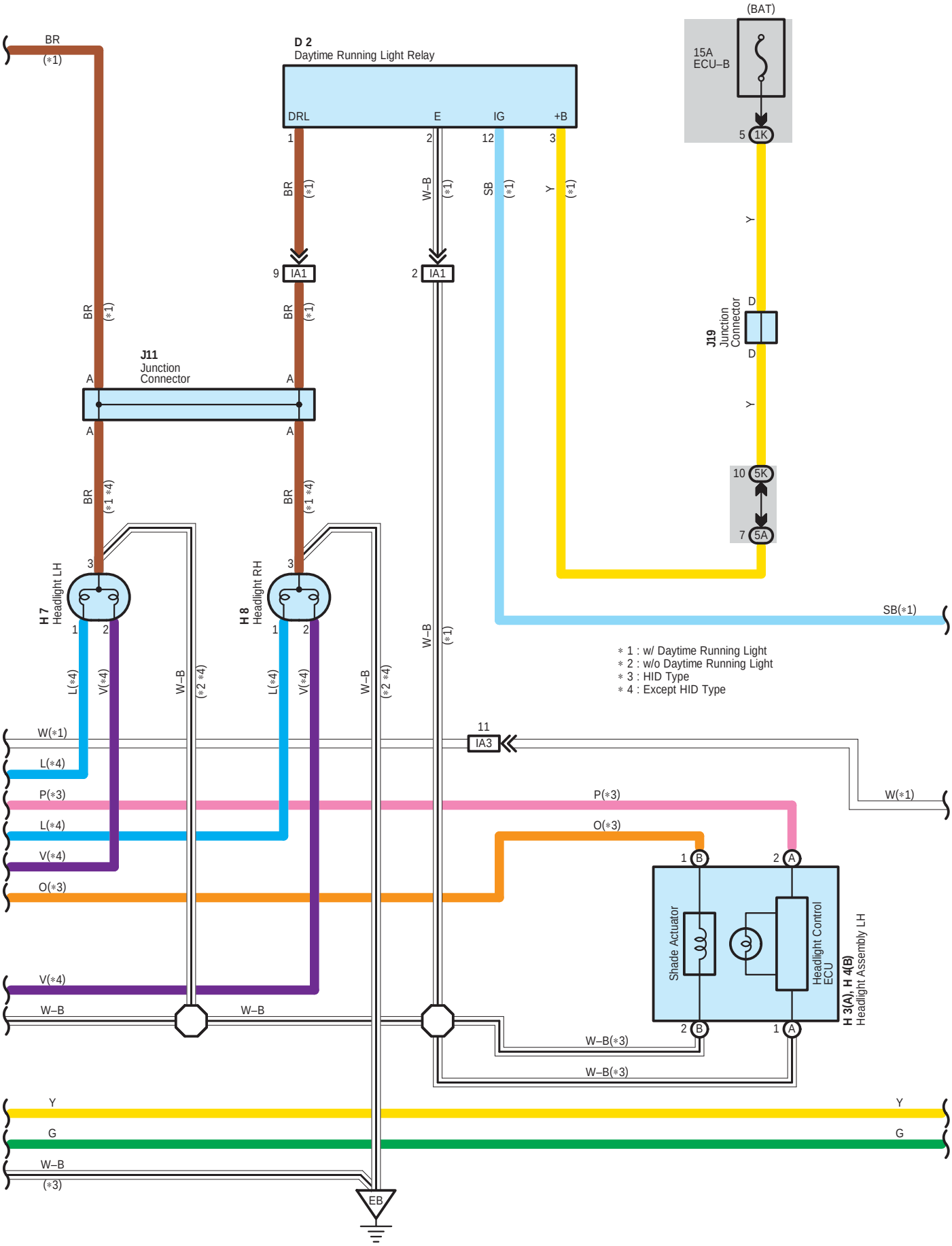

cardiagn.com

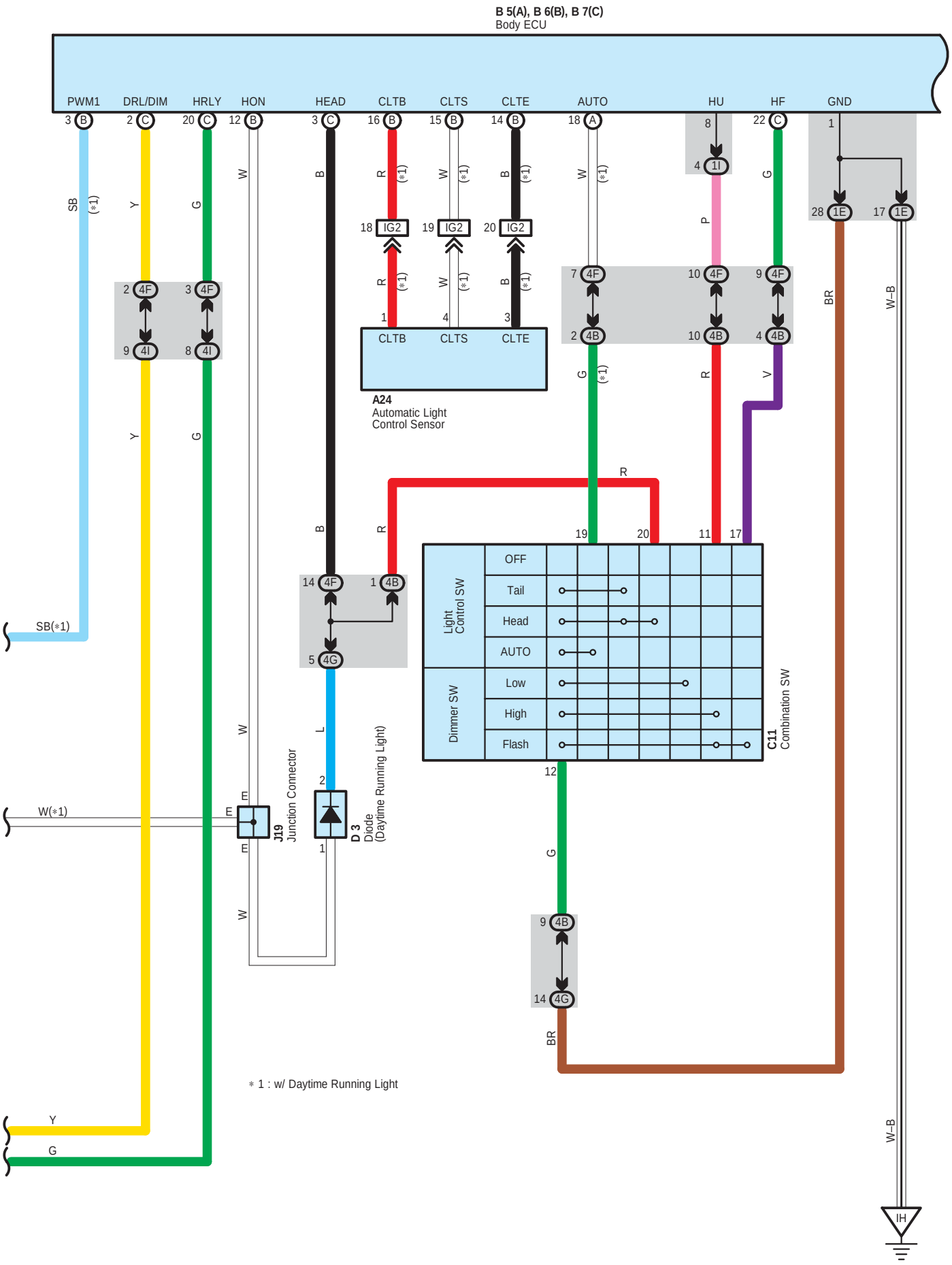

cardiagn.com

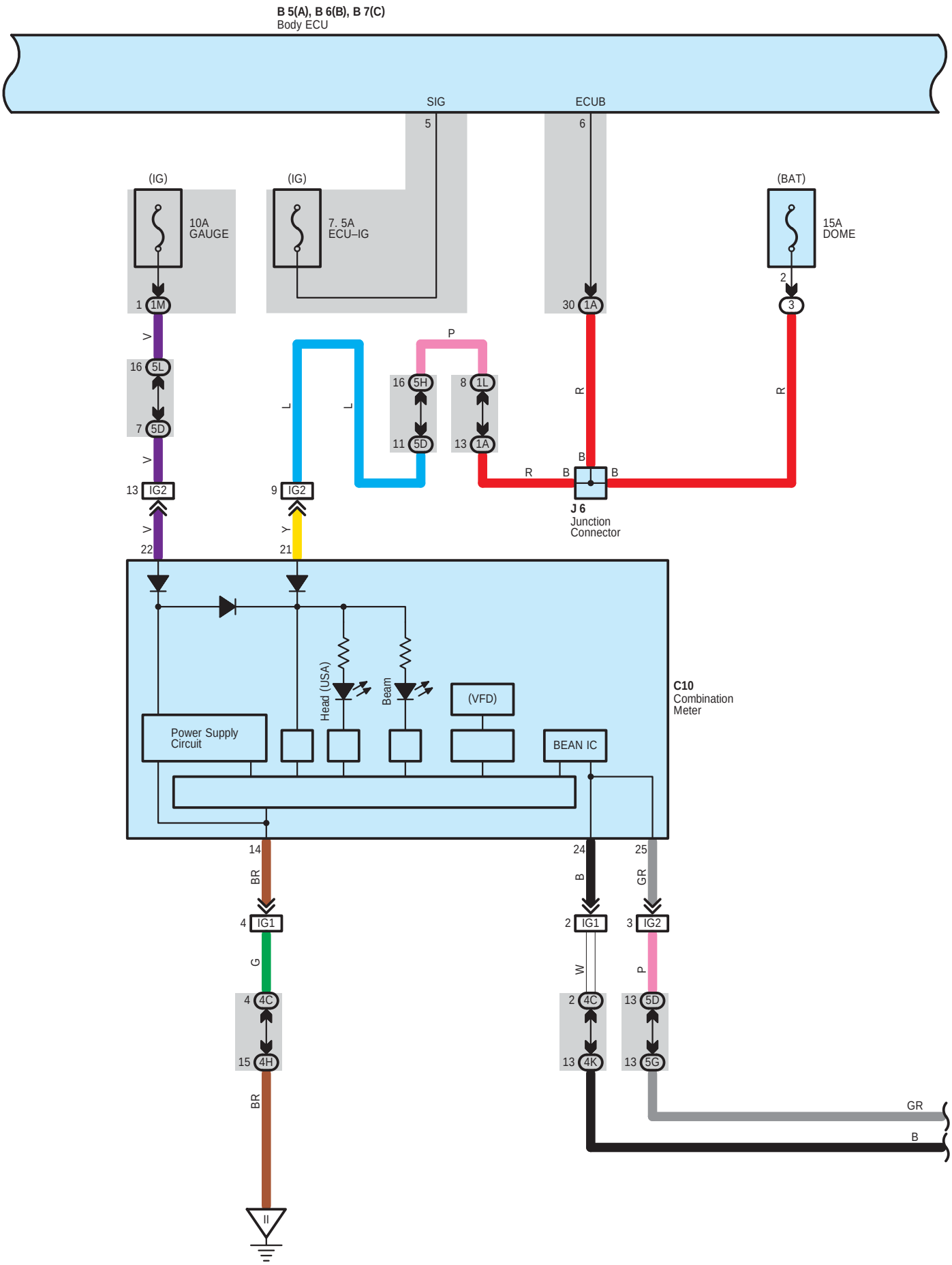

cardiagn.com

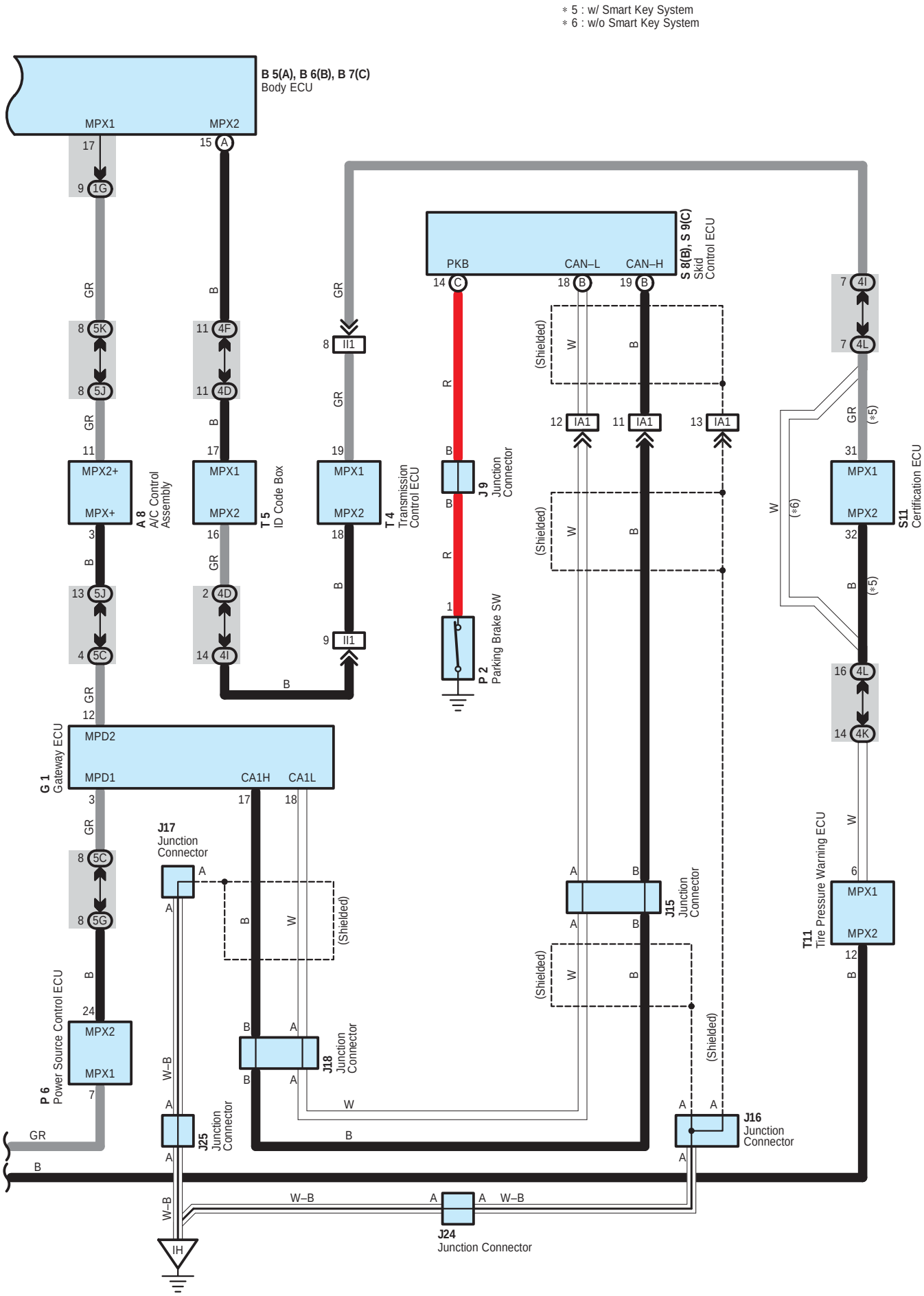

cardiagn.com

System Outline

Daytime Running Light Function (Canada)

When power SW is at IG ON position and the vehicle is ready to drive (READY lamp on the display in combination meter is on), releasing parking brake makes signal go into TERMINAL PKB of body ECU. In this condition, when light control SW is at Off/Tail/AUTO position (Headlight is not lit), body ECU sends daytime operation request from TERMINAL DRL/DIM to daytime running light relay. As a result, daytime running light relay duty–operates headlights (Dimmer than regular lighting)

: Parts Location

Code		See Page	Code		See Page	Code		See Page
A8		48	H5	A	46	J18		50
A24		48	H6	B	46	J19		50
B5	A	48	H7		46	J24		50
B6	B	48	H8		46	J25		50
B7	C	48	J6		50	P2		51
C10		49	J7	A	50	P6		51
C11		49	J8	B	50	S8	B	51
D2		49	J9		50	S9	C	51
D3		49	J11		50	S11		51
G1		49	J15		50	T4		51
H3	A	46	J16		50	T5		51
H4	B	46	J17		50	T11		51

: Relay Blocks

Code	See Page	Relay Blocks (Relay Block Location)
2	28	Engine Room R/B No.2 (Right Side of Reserve Tank)
3	22	Engine Room R/B (Engine Compartment Left)

: Junction Block and Wire Harness Connector

Code	See Page	Junction Block and Wire Harness (Connector Location)
1A	30	Engine Room Main Wire and Driver Side J/B (Lower Finish Panel)
1E	30	Instrument Panel Wire and Driver Side J/B (Lower Finish Panel)
1G		
1I		
1K	31	
1L		
1M		
3B	23	Engine Room Main Wire and Engine Room J/B (Engine Compartment Left)
4B	38	Instrument Panel Wire and Center Connector No.1 (Behind the Combination Meter)
4C		
4D		
4F		
4G		
4H		
4I		
4K		
4L		
5A	42	Instrument Panel Wire and Center Connector No.2 (Instrument Panel Brace RH)
5C		
5D		
5G		
5H		
5J		
5K		
5L		

cardiagn.com

: **Connector Joining Wire Harness and Wire Harness**

Code	See Page	Joining Wire Harness and Wire Harness (Connector Location)
IA1	58	Engine Room Main Wire and Instrument Panel Wire (Upper Parts of Front Body Pillar LH)
IA3		
IG1	59	Instrument Panel Wire and Instrument Panel No.2 Wire (Behind the Combination Meter)
IG2		
II1	59	Engine Wire and Instrument Panel Wire (Behind the Glove Box)
IJ3	59	Engine Room Main Wire and Instrument Panel Wire (Behind the Glove Box)

: **Ground Points**

Code	See Page	Ground Points Location
EA	56	Right Side of the Fender Apron
EB		
EE	56	Left Side of the Suspension Tower
IH	58	Cowl Side Panel LH
II	58	Instrument Panel Brace LH

cardiagn.com

cardiagn.com

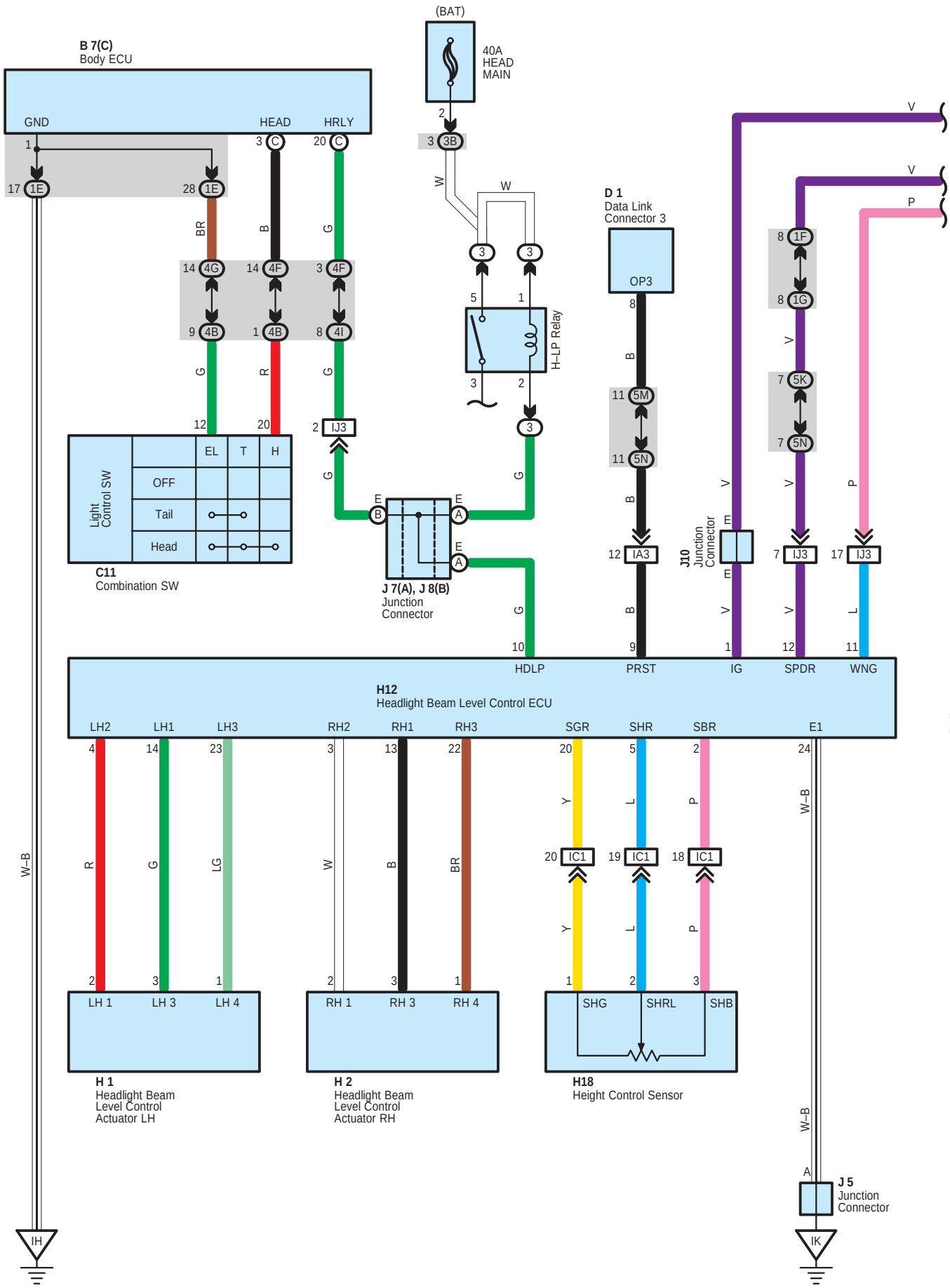

cardiagn.com

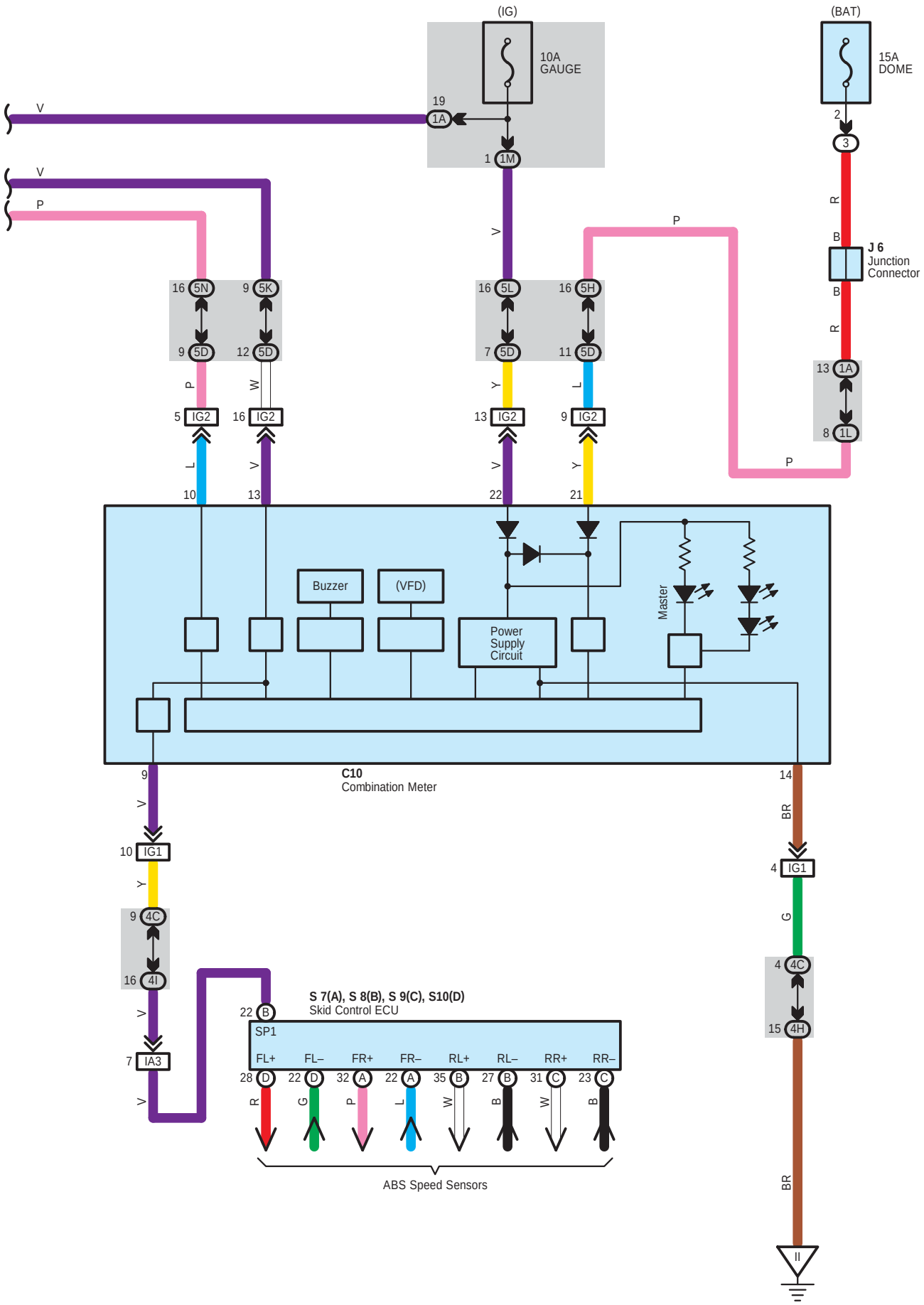

cardiagn.com

Headlight Beam Level Control

System Outline

This system adjusts the illuminating angle from changes in the vehicle height and axle distance, based on the information of the vehicle height detected by the height sensors installed at the rear of the vehicle and on information of the vehicle speed and acceleration output from the VSC system which operates the reflector with the obtained illuminating angle through actuators in order to always keep the beam axis constant.
If an error occurs in this system, the headlight beam level control warning light in the combination meter lights up and warning buzzer goes on to warn the driver.

: Parts Location

Code	See Page	Code	See Page	Code	See Page
B7 C	48	H12	49	J10	50
C10	49	H18	53	S7 A	51
C11	49	J5	50	S8 B	51
D1	49	J6	50	S9 C	51
H1	46	J7 A	50	S10 D	51
H2	46	J8 B	50		

: Relay Blocks

Code	See Page	Relay Blocks (Relay Block Location)
3	22	Engine Room R/B (Engine Compartment Left)

: Junction Block and Wire Harness Connector

Code	See Page	Junction Block and Wire Harness (Connector Location)
1A	30	Engine Room Main Wire and Driver Side J/B (Lower Finish Panel)
1E	30	Instrument Panel Wire and Driver Side J/B (Lower Finish Panel)
1F		
1G		
1L	31	
1M		
3B	23	Engine Room Main Wire and Engine Room J/B (Engine Compartment Left)
4B	38	Instrument Panel Wire and Center Connector No.1 (Behind the Combination Meter)
4C		
4F		
4G		
4H		
4I		
5D	42	Instrument Panel Wire and Center Connector No.2 (Instrument Panel Brace RH)
5H		
5K		
5L		
5M		
5N		

: Connector Joining Wire Harness and Wire Harness

Code	See Page	Joining Wire Harness and Wire Harness (Connector Location)
IA3	58	Engine Room Main Wire and Instrument Panel Wire (Upper Parts of Front Body Pillar LH)
IC1	58	Engine Room Main Wire and Floor Wire (Cowl Side Panel LH)
IG1	59	Instrument Panel Wire and Instrument Panel No.2 Wire (Behind the Combination Meter)
IG2		
IJ3	59	Engine Room Main Wire and Instrument Panel Wire (Behind the Glove Box)

cardiagn.com

▽ : **Ground Points**

Code	See Page	Ground Points Location
IH	58	Cowl Side Panel LH
II	58	Instrument Panel Brace LH
IK	58	Cowl Side Panel RH

cardiagn.com

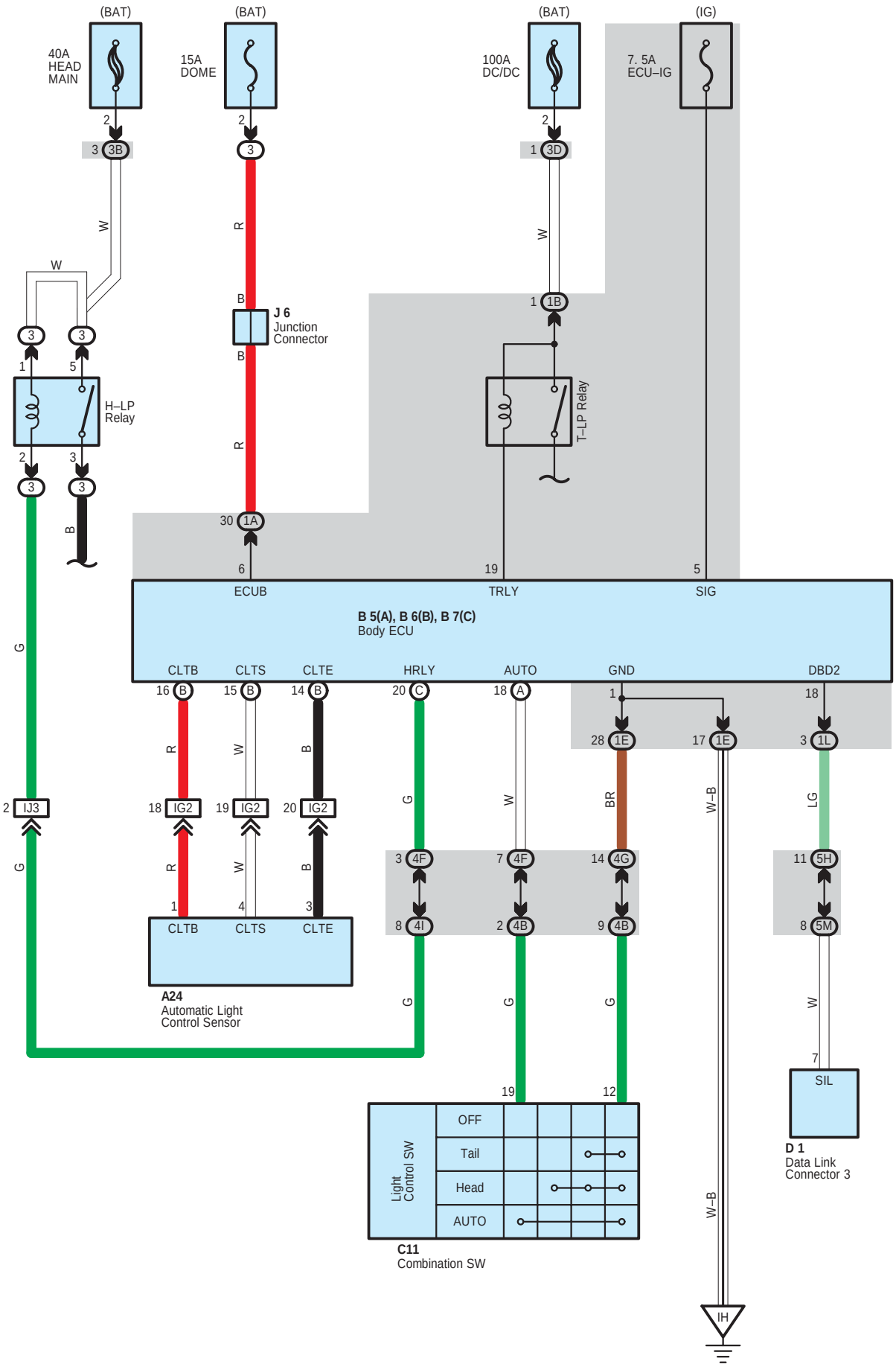

cardiagn.com

System Outline

The automatic light control system works when the light control SW is turned to AUTO. The automatic light control sensor detects the brightness around the vehicle. By this function, the system automatically turns on the taillight and headlight if the brightness is below the certain level and turns off the taillight and headlight when the surroundings become brighter than the certain level.

: Parts Location

Code		See Page	Code		See Page	Code	See Page
A24		48	B7	C	48	J6	50
B5	A	48	C11		49		
B6	B	48	D1		49		

: Relay Blocks

Code	See Page	Relay Blocks (Relay Block Location)
3	22	Engine Room R/B (Engine Compartment Left)

: Junction Block and Wire Harness Connector

Code	See Page	Junction Block and Wire Harness (Connector Location)
1A	30	Engine Room Main Wire and Driver Side J/B (Lower Finish Panel)
1B		
1E	30	Instrument Panel Wire and Driver Side J/B (Lower Finish Panel)
1L	31	
3B	23	Engine Room Main Wire and Engine Room J/B (Engine Compartment Left)
3D		
4B	38	Instrument Panel Wire and Center Connector No.1 (Behind the Combination Meter)
4F		
4G		
4I		
5H	42	Instrument Panel Wire and Center Connector No.2 (Instrument Panel Brace RH)
5M		

: Connector Joining Wire Harness and Wire Harness

Code	See Page	Joining Wire Harness and Wire Harness (Connector Location)
IG2	59	Instrument Panel Wire and Instrument Panel No.2 Wire (Behind the Combination Meter)
IJ3	59	Engine Room Main Wire and Instrument Panel Wire (Behind the Glove Box)

: Ground Points

Code	See Page	Ground Points Location
IH	58	Cowl Side Panel LH

cardiagn.com

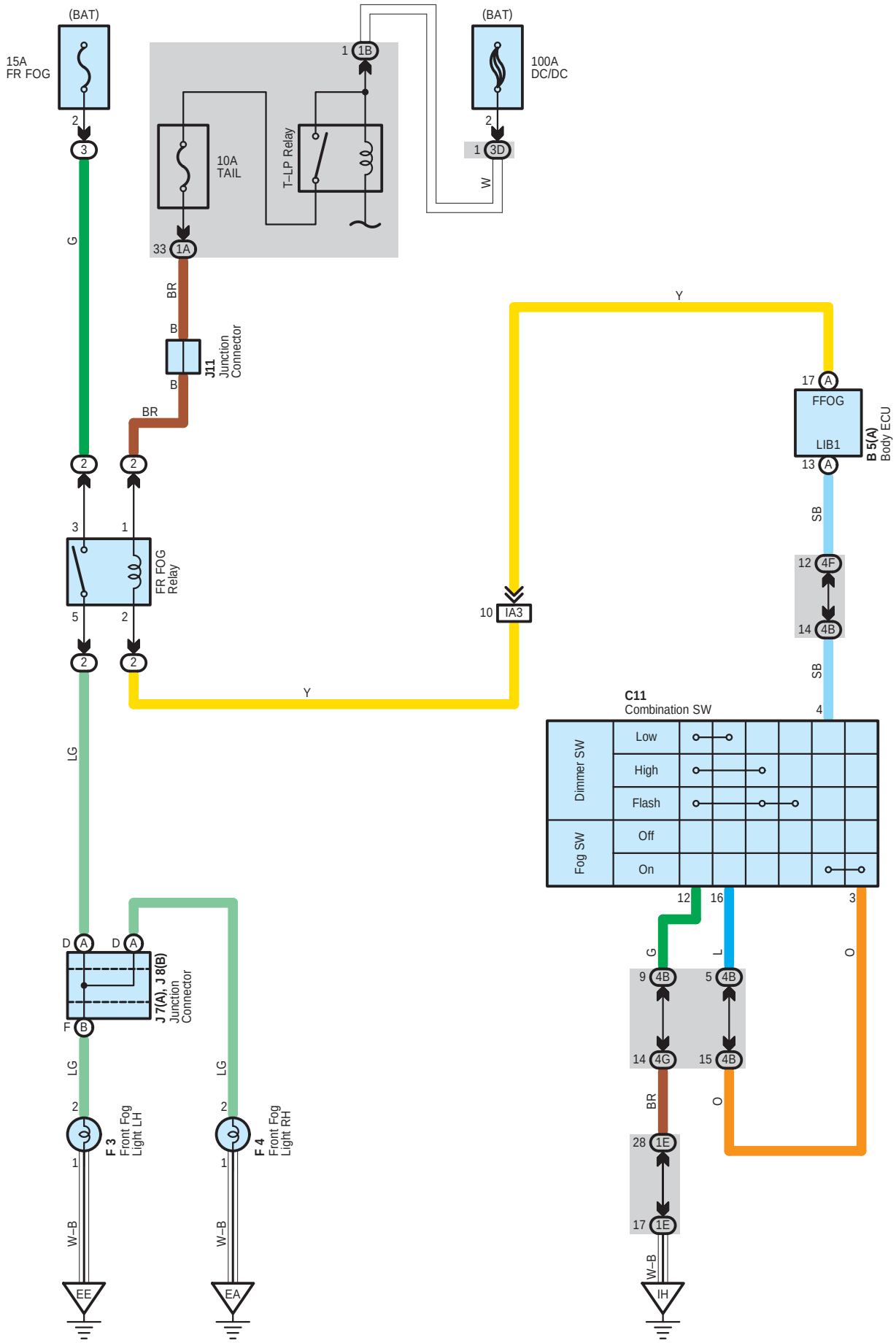

cardiagn.com

: Parts Location

Code		See Page	Code		See Page	Code	See Page
B5	A	48	F4		46	J11	50
C11		49	J7	A	50		
F3		46	J8	B	50		

: Relay Blocks

Code	See Page	Relay Blocks (Relay Block Location)
2	28	Engine Room R/B No.2 (Right Side of Reserve Tank)
3	22	Engine Room R/B (Engine Compartment Left)

: Junction Block and Wire Harness Connector

Code	See Page	Junction Block and Wire Harness (Connector Location)
1A	30	Engine Room Main Wire and Driver Side J/B (Lower Finish Panel)
1B		
1E	30	Instrument Panel Wire and Driver Side J/B (Lower Finish Panel)
3D	23	Engine Room Main Wire and Engine Room J/B (Engine Compartment Left)
4B	38	Instrument Panel Wire and Center Connector No.1 (Behind the Combination Meter)
4F		
4G		

: Connector Joining Wire Harness and Wire Harness

Code	See Page	Joining Wire Harness and Wire Harness (Connector Location)
IA3	58	Engine Room Main Wire and Instrument Panel Wire (Upper Parts of Front Body Pillar LH)

: Ground Points

Code	See Page	Ground Points Location
EA	56	Right Side of the Fender Apron
EE	56	Left Side of the Suspension Tower
IH	58	Cowl Side Panel LH

cardiagn.com

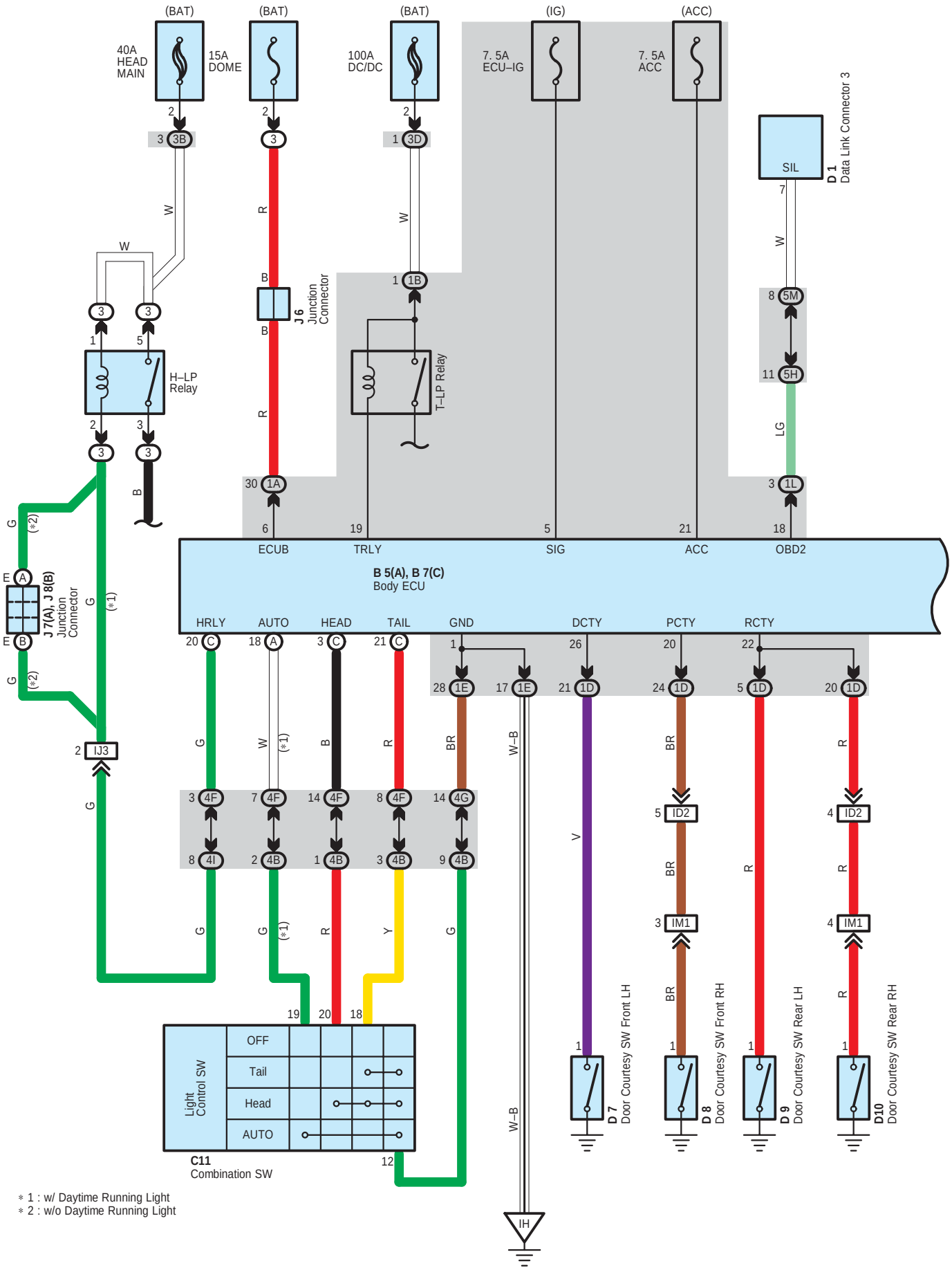

cardiagn.com

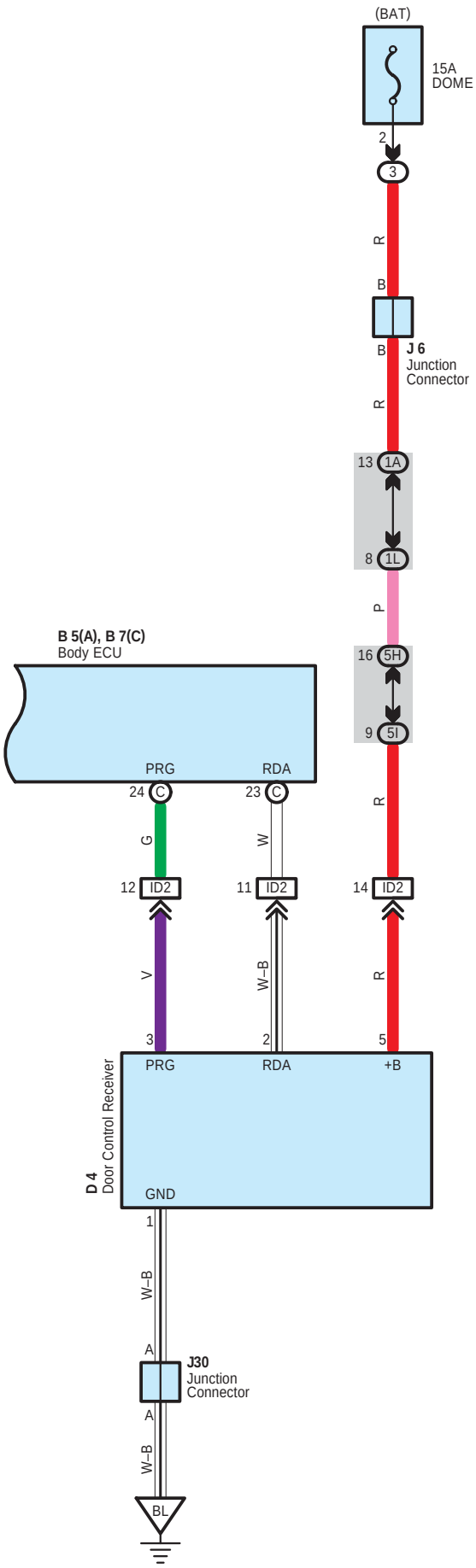

cardiagn.com

Light Auto Turn Off System

System Outline

* When the other lamps than headlights are lit under 'TAIL' or 'AUTO' condition of the light control SW, the taillights and front fog lights are turned OFF if the power SW is changed from 'IG ON' to 'IG OFF', and the driver side door is opened from closed condition.
* When the headlamps are lit under 'HEAD' or 'AUTO' condition of the light control SW, if the power SW is changed from 'IG ON' to 'IG OFF', and all the doors are closed from open condition or under all the door locked condition, operating the wireless door lock function turns OFF the headlights, taillights and front fog lights.

: Parts Location

Code		See Page	Code	See Page	Code		See Page
B5	A	48	D7	52	J7	A	50
B7	C	48	D8	52	J8	B	50
C11		49	D9	52	J30		53
D1		49	D10	52			
D4		52	J6	50			

: Relay Blocks

Code	See Page	Relay Blocks (Relay Block Location)
3	22	Engine Room R/B (Engine Compartment Left)

: Junction Block and Wire Harness Connector

Code	See Page	Junction Block and Wire Harness (Connector Location)
1A	30	Engine Room Main Wire and Driver Side J/B (Lower Finish Panel)
1B		
1D	30	Floor Wire and Driver Side J/B (Lower Finish Panel)
1E	30	Instrument Panel Wire and Driver Side J/B (Lower Finish Panel)
1L	31	
3B	23	Engine Room Main Wire and Engine Room J/B (Engine Compartment Left)
3D		
4B	38	Instrument Panel Wire and Center Connector No.1 (Behind the Combination Meter)
4F		
4G		
4I		
5H	42	Instrument Panel Wire and Center Connector No.2 (Instrument Panel Brace RH)
5I		
5M		

: Connector Joining Wire Harness and Wire Harness

Code	See Page	Joining Wire Harness and Wire Harness (Connector Location)
ID2	58	Instrument Panel Wire and Floor Wire (Left Kick Panel)
IJ3	59	Engine Room Main Wire and Instrument Panel Wire (Behind the Glove Box)
IM1	59	Instrument Panel Wire and Floor No.2 Wire (Right Kick Panel)

: Ground Points

Code	See Page	Ground Points Location
IH	58	Cowl Side Panel LH
BL	60	Rear Side of Left Quarter Panel

cardiagn.com

cardiagn.com

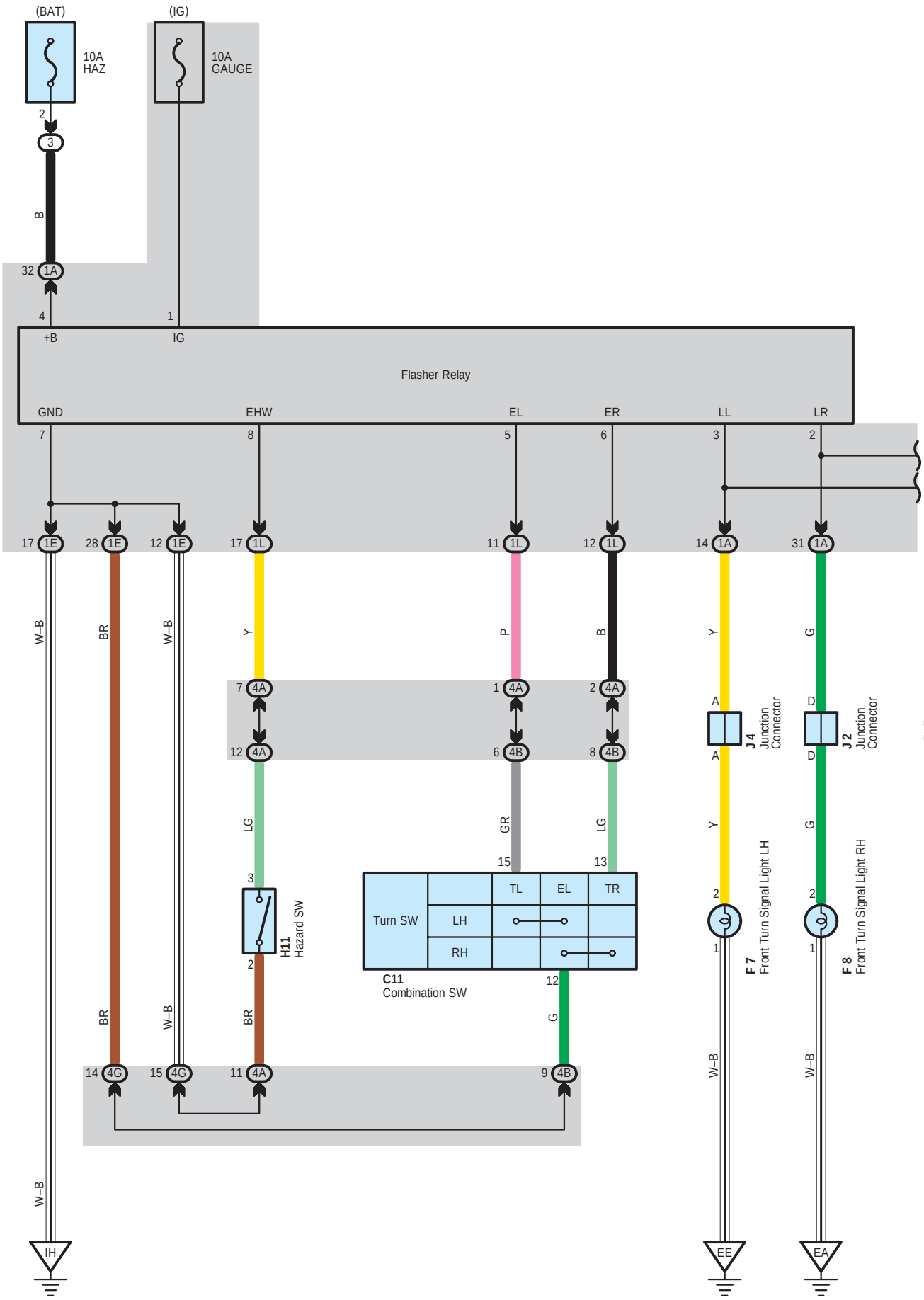

cardiagn.com

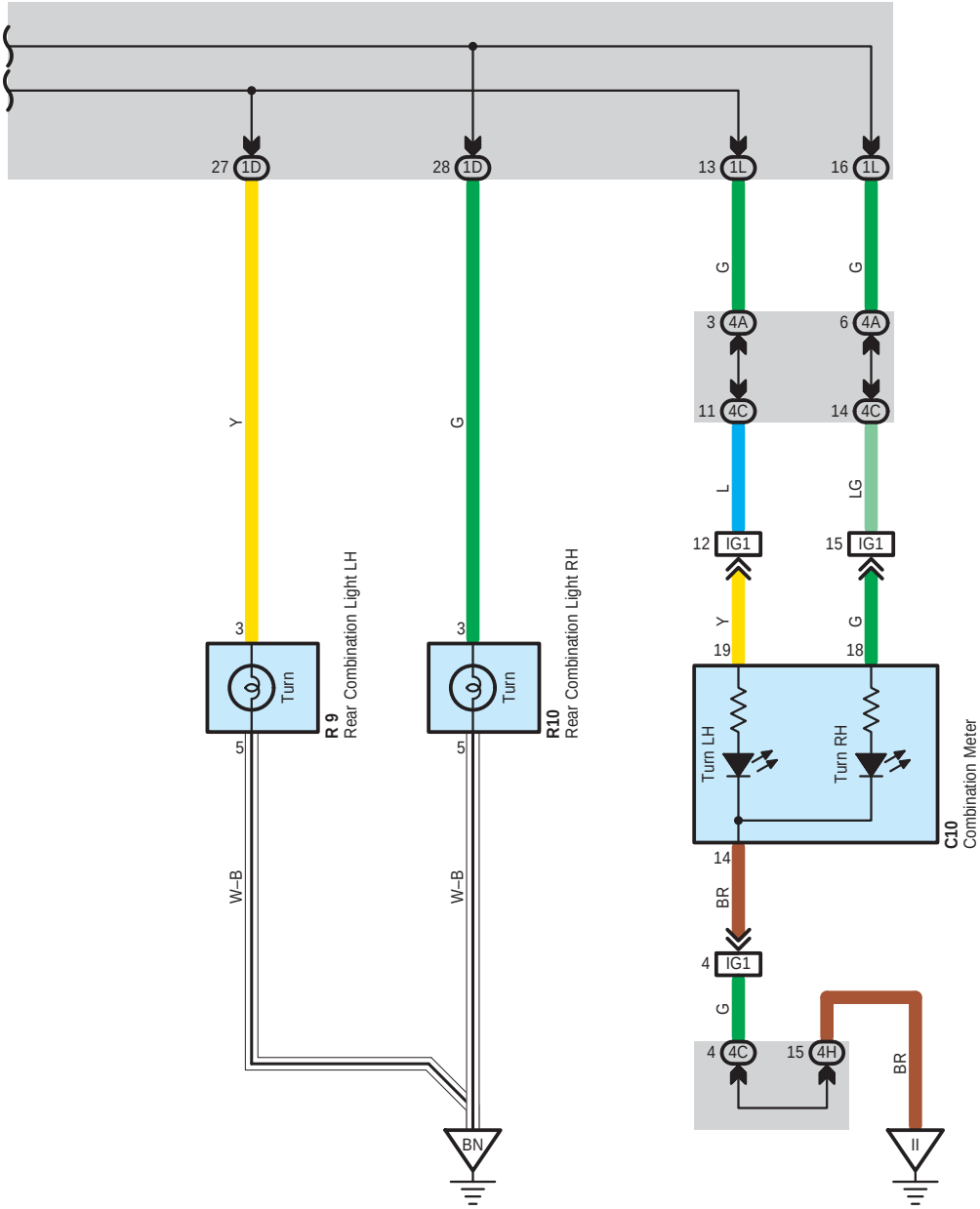

cardiagn.com

Turn Signal and Hazard Warning Light

: Parts Location

Code	See Page	Code	See Page	Code	See Page
C10	49	F8	46	J4	47
C11	49	H11	49	R9	54
F7	46	J2	47	R10	54

: Relay Blocks

Code	See Page	Relay Blocks (Relay Block Location)
3	22	Engine Room R/B (Engine Compartment Left)

: Junction Block and Wire Harness Connector

Code	See Page	Junction Block and Wire Harness (Connector Location)
1A	30	Engine Room Main Wire and Driver Side J/B (Lower Finish Panel)
1D	30	Floor Wire and Driver Side J/B (Lower Finish Panel)
1E	30	Instrument Panel Wire and Driver Side J/B (Lower Finish Panel)
1L	31	
4A	38	Instrument Panel Wire and Center Connector No.1 (Behind the Combination Meter)
4B		
4C		
4G		
4H		

: Connector Joining Wire Harness and Wire Harness

Code	See Page	Joining Wire Harness and Wire Harness (Connector Location)
IG1	59	Instrument Panel Wire and Instrument Panel No.2 Wire (Behind the Combination Meter)

: Ground Points

Code	See Page	Ground Points Location
EA	56	Right Side of the Fender Apron
EE	56	Left Side of the Suspension Tower
IH	58	Cowl Side Panel LH
II	58	Instrument Panel Brace LH
BN	60	Lower Back Panel Center

cardiagn.com

cardiagn.com

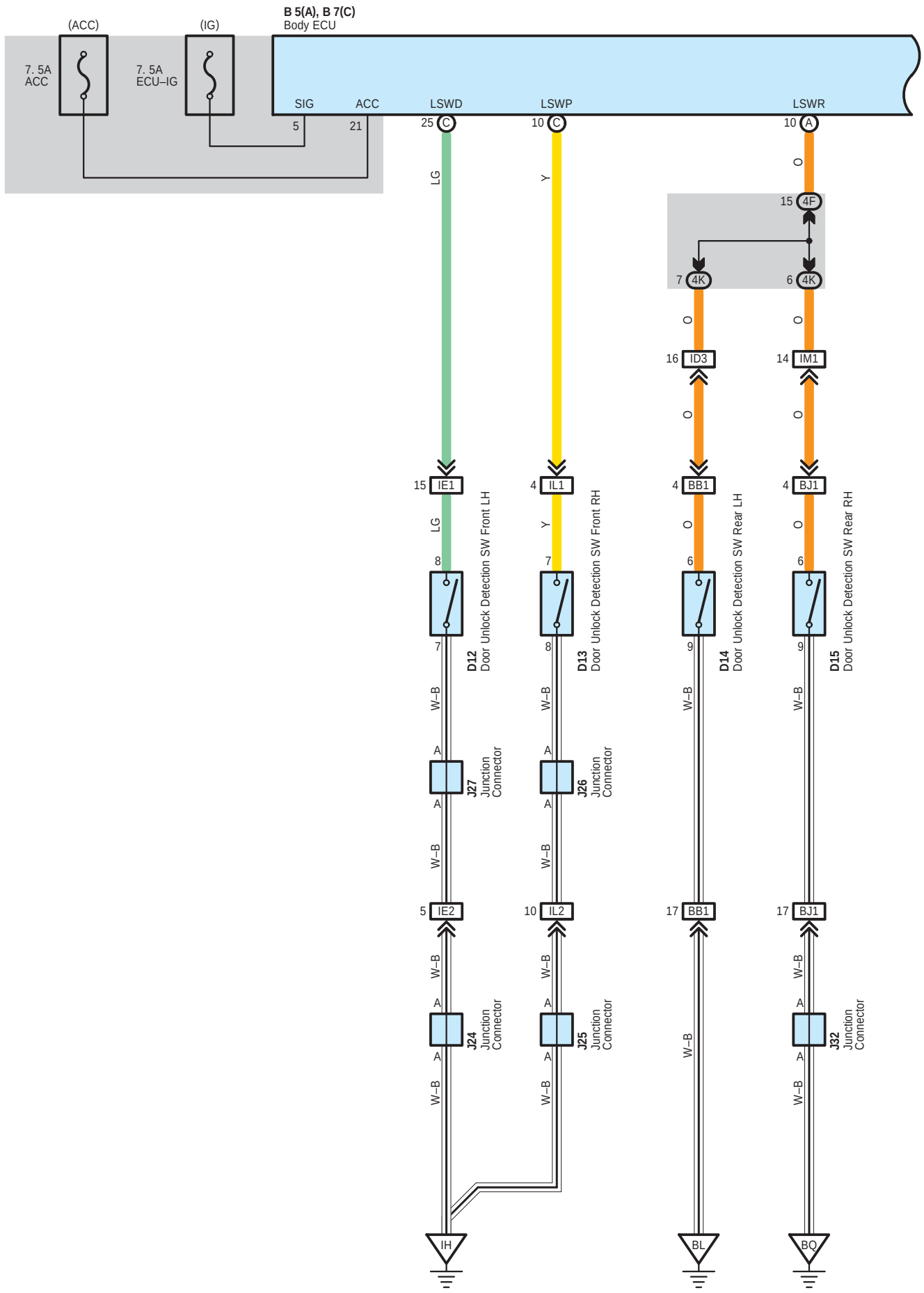

cardiagn.com

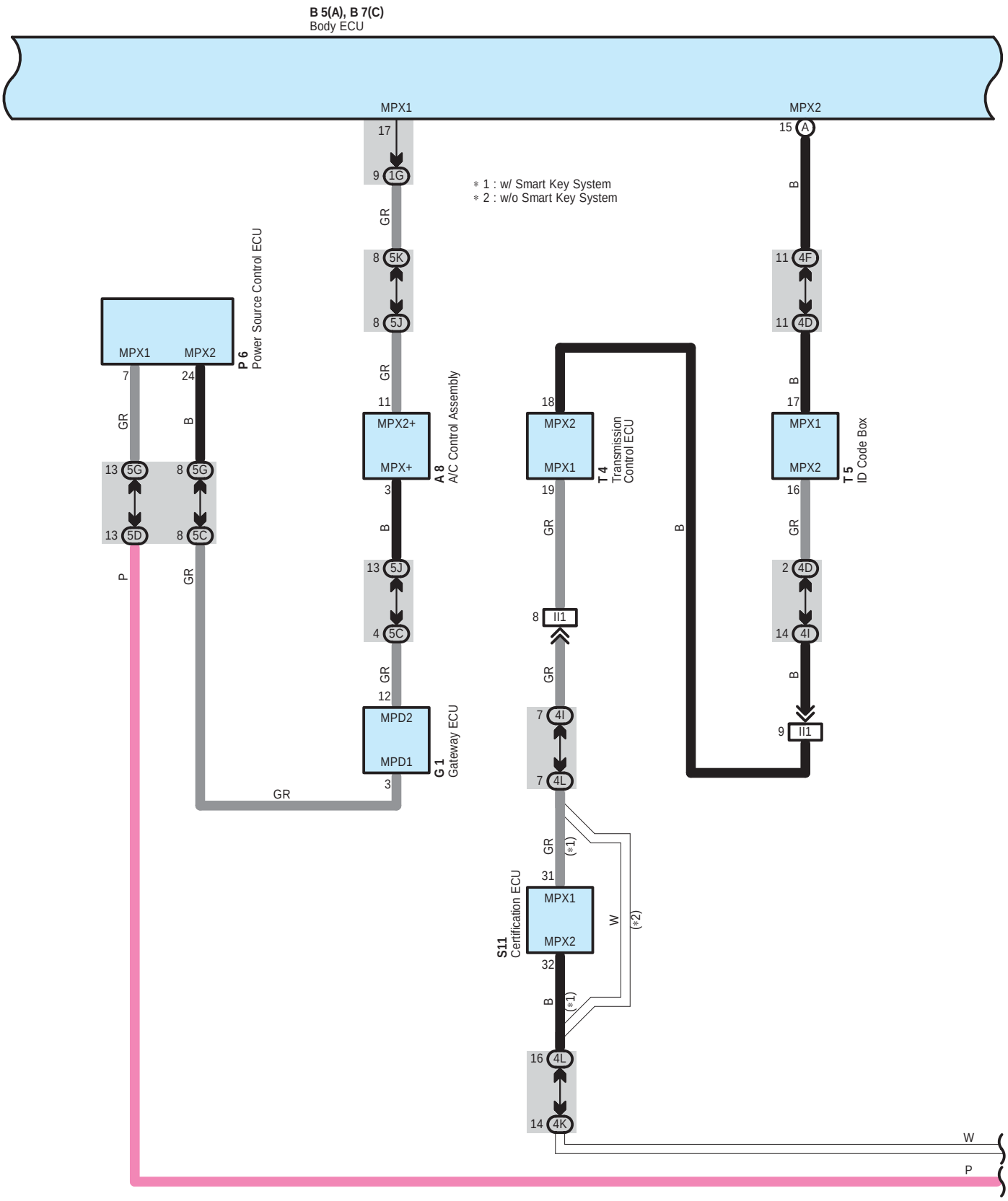

cardiagn.com

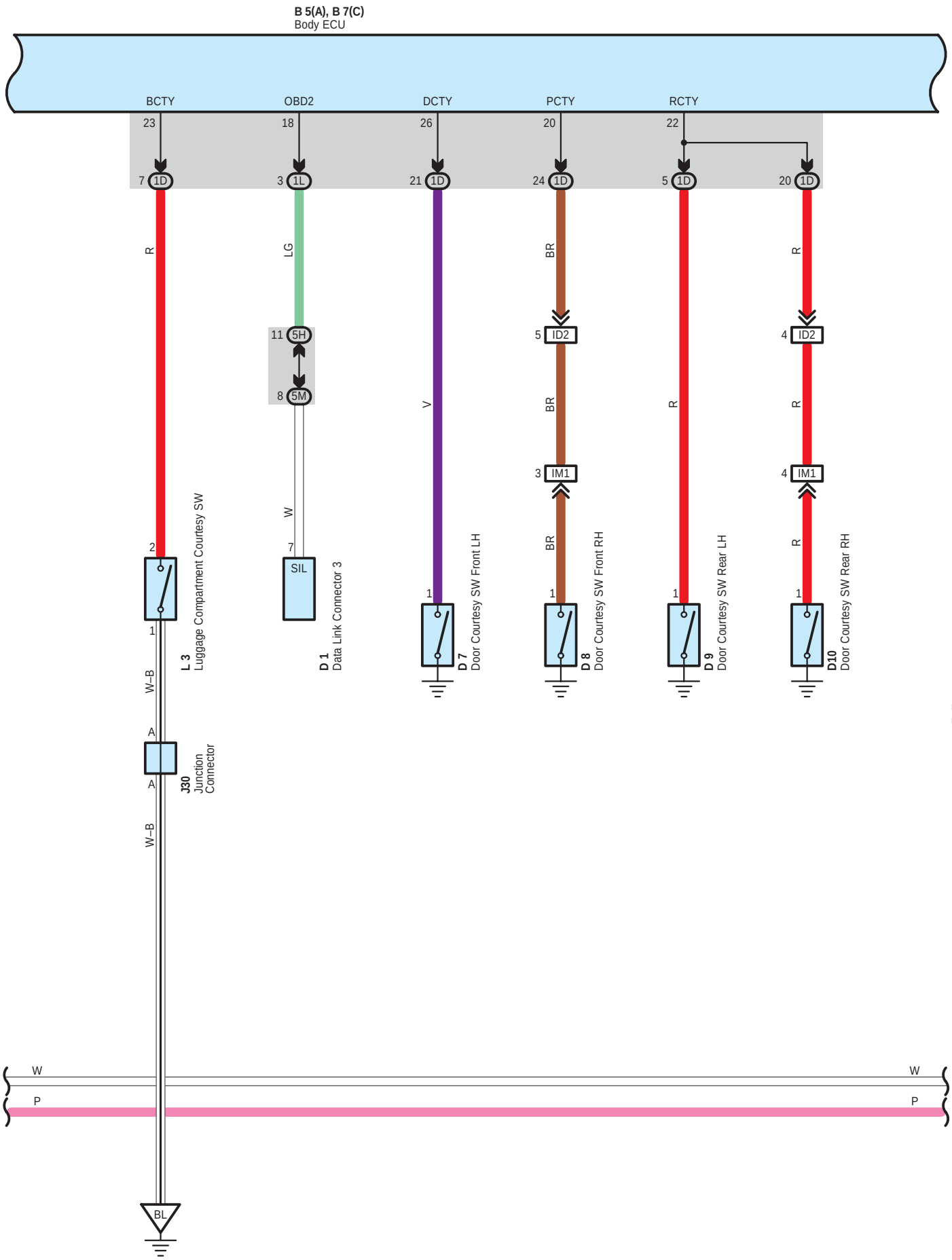

cardiagn.com

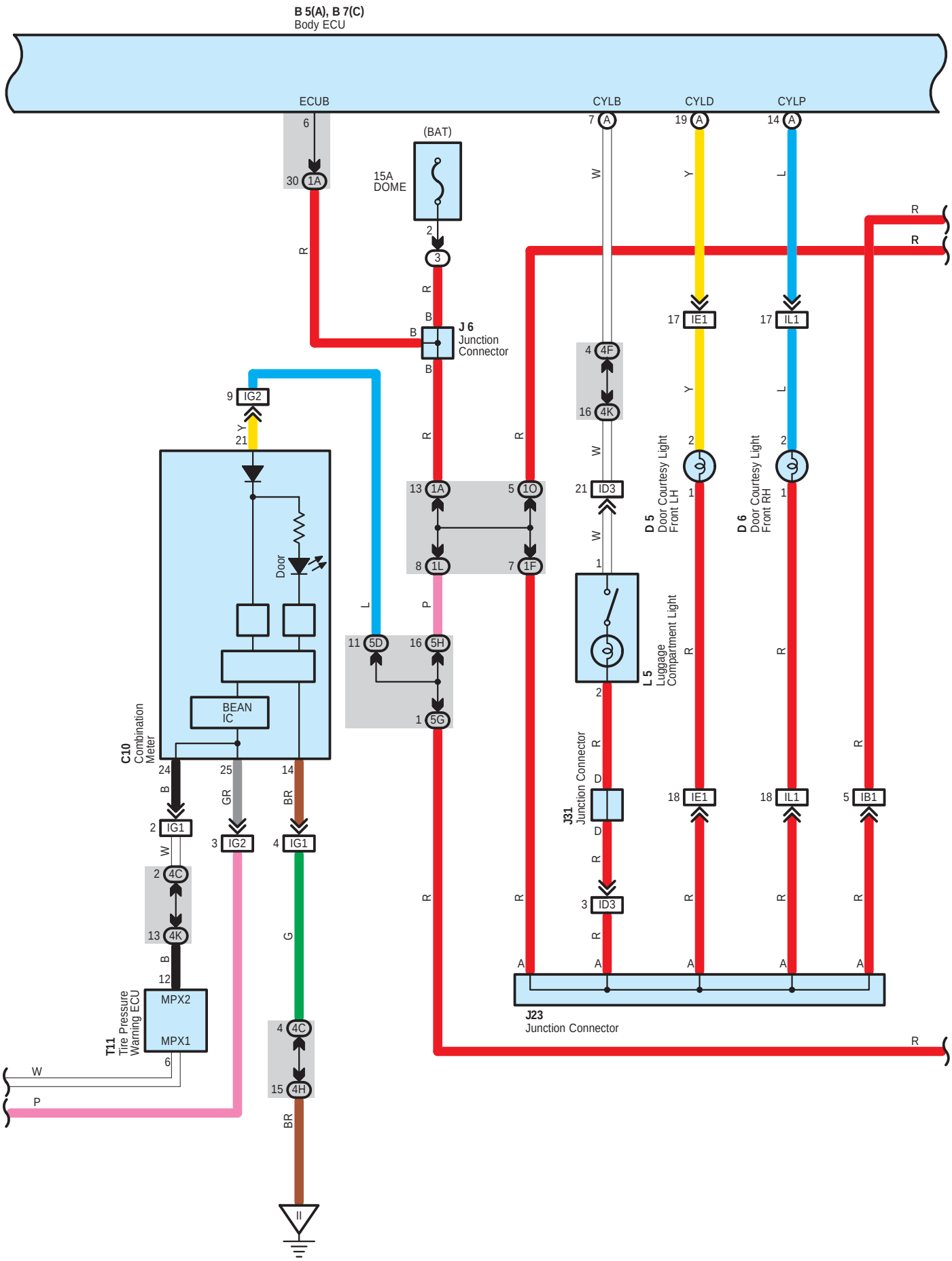

cardiagn.com

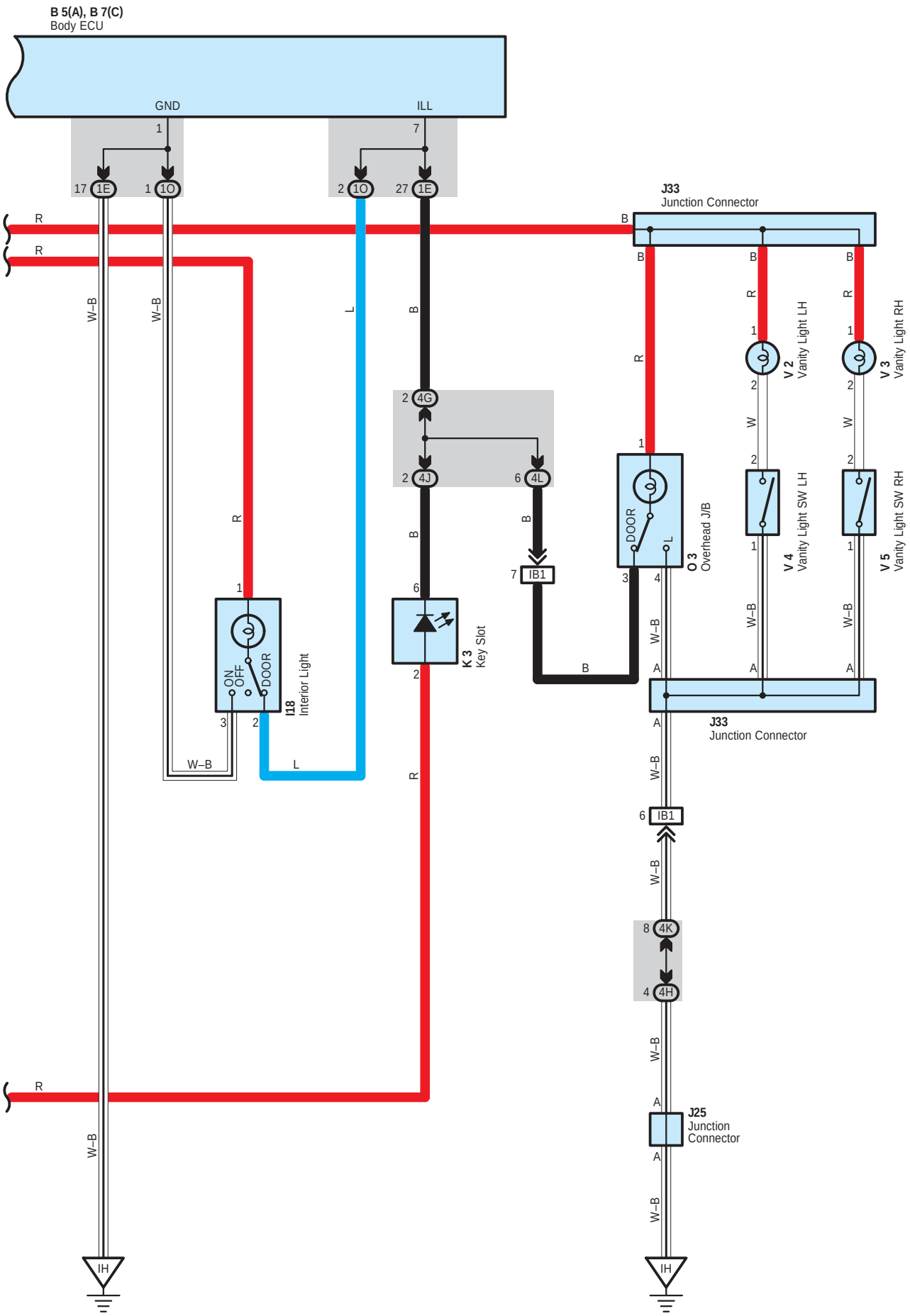

cardiagn.com

System Outline

Interior light operates with control of body ECU.

Illumination Control

Lighting function of interior light, overhead J/B, electrical key holder

When any door is opened, signal is sent from door courtesy SW to body ECU. Interior light, overhead J/B and key slot light on gradually from unlit condition to fully lit condition within 1.5 seconds if lighting SW of interior light and overhead J/B is set for door.

After that, when all the doors are shut and any one of the door is unlocked, interior light, overhead J/B and key slot are lit up for about 15 seconds (Timer lighting) and then are lit off gradually.

Under conditions that power SW is set at OFF position and all the doors are closed, when any one of the door is unlocked, interior light, overhead J/B and key slot light on gradually from unlit condition to fully lit condition within 1.5 seconds, stay on for the certain time (Timer lighting) and then light off gradually. If power SW is turned from OFF position to ACC ON or IG ON position during timer lighting, the timer lighting function is cut off immediately and the light goes off gradually.

Even though timer lighting conditions are satisfied when power SW is at ACC ON or IG ON position, the light does not stay on for certain time (For 15 sec.) after lighting, but goes off gradually.

All the doors are locked during timer lighting, the timer lighting function is cut off immediately and the light goes off gradually.

: Parts Location

Code		See Page	Code	See Page	Code	See Page
A8		48	D15	52	L3	53
B5	A	48	G1	49	L5	53
B7	C	48	I18	53	O3	54
C10		49	J6	50	P6	51
D1		49	J23	50	S11	51
D5		52	J24	50	T4	51
D6		52	J25	50	T5	51
D7		52	J26	53	T11	51
D8		52	J27	53	V2	55
D9		52	J30	53	V3	55
D10		52	J31	53	V4	55
D12		52	J32	53	V5	55
D13		52	J33	53		
D14		52	K3	50		

: Relay Blocks

Code	See Page	Relay Blocks (Relay Block Location)
3	22	Engine Room R/B (Engine Compartment Left)

cardiagn.com

: **Junction Block and Wire Harness Connector**

Code	See Page	Junction Block and Wire Harness (Connector Location)
1A	30	Engine Room Main Wire and Driver Side J/B (Lower Finish Panel)
1D	30	Floor Wire and Driver Side J/B (Lower Finish Panel)
1E	30	Instrument Panel Wire and Driver Side J/B (Lower Finish Panel)
1F		
1G		
1L	31	
1O	30	Roof Wire and Driver Side J/B (Lower Finish Panel)
4C	38	Instrument Panel Wire and Center Connector No.1 (Behind the Combination Meter)
4D		
4F		
4G		
4H		
4I		
4J		
4K		
4L		
5C	42	Instrument Panel Wire and Center Connector No.2 (Instrument Panel Brace RH)
5D		
5G		
5H		
5J		
5K		
5M		

: **Connector Joining Wire Harness and Wire Harness**

Code	See Page	Joining Wire Harness and Wire Harness (Connector Location)
IB1	58	Roof Wire and Instrument Panel Wire (Upper Parts of Front Body Pillar LH)
ID2	58	Instrument Panel Wire and Floor Wire (Left Kick Panel)
ID3		
IE1	58	Front Door LH Wire and Instrument Panel Wire (Left Kick Panel)
IE2		
IG1	59	Instrument Panel Wire and Instrument Panel No.2 Wire (Behind the Combination Meter)
IG2		
II1	59	Engine Wire and Instrument Panel Wire (Behind the Glove Box)
IL1	59	Front Door RH Wire and Instrument Panel Wire (Right Kick Panel)
IL2		
IM1	59	Instrument Panel Wire and Floor No.2 Wire (Right Kick Panel)
BB1	60	Rear Door No.2 Wire and Floor Wire (Left Center Pillar)
BJ1	61	Rear Door No.1 Wire and Floor No.2 Wire (Right Center Pillar)

: **Ground Points**

Code	See Page	Ground Points Location
IH	58	Cowl Side Panel LH
II	58	Instrument Panel Brace LH
BL	60	Rear Side of Left Quarter Panel
BQ	60	Rear Side of Right Quarter Panel

cardiagn.com

cardiagn.com

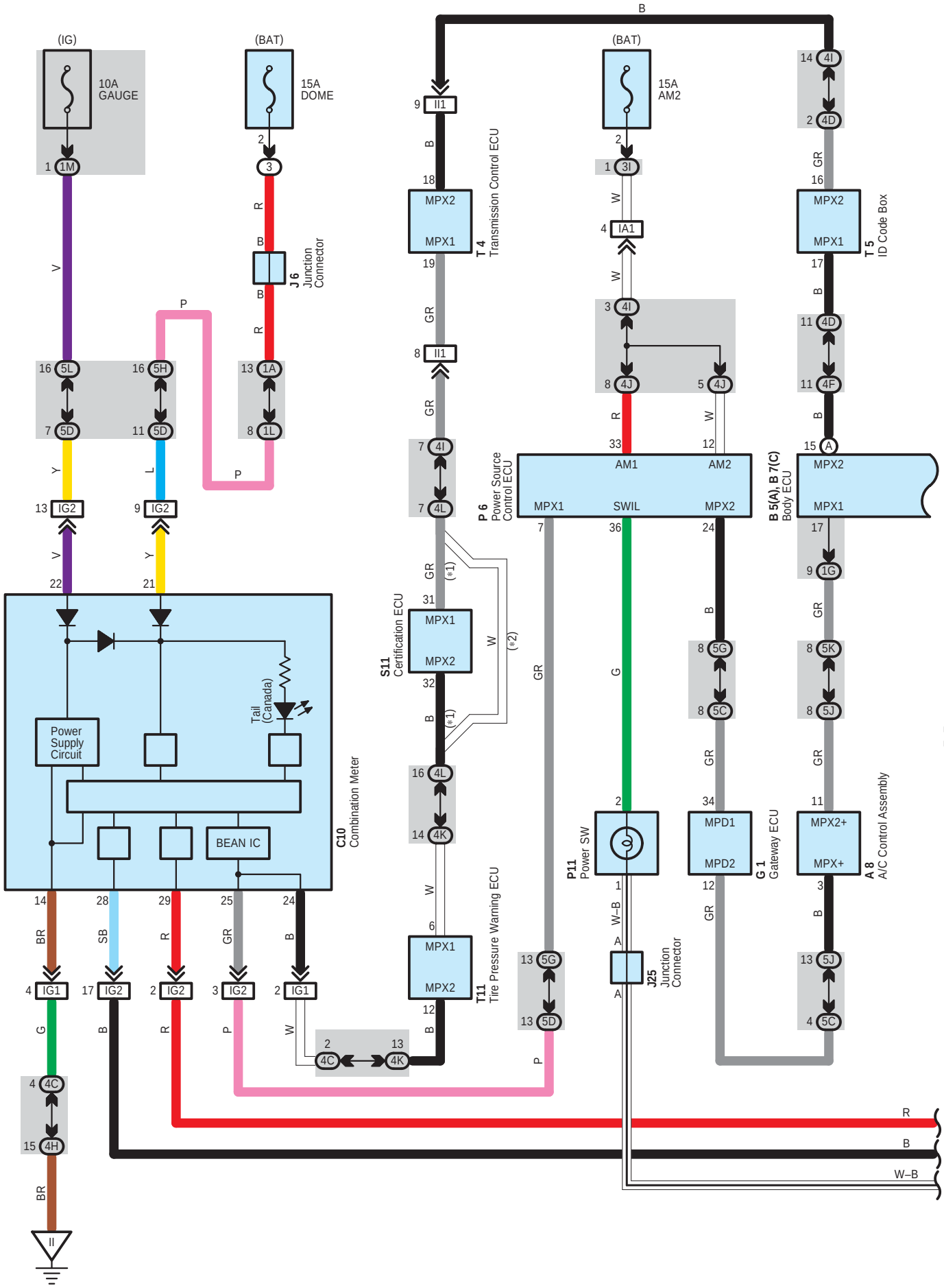

cardiagn.com

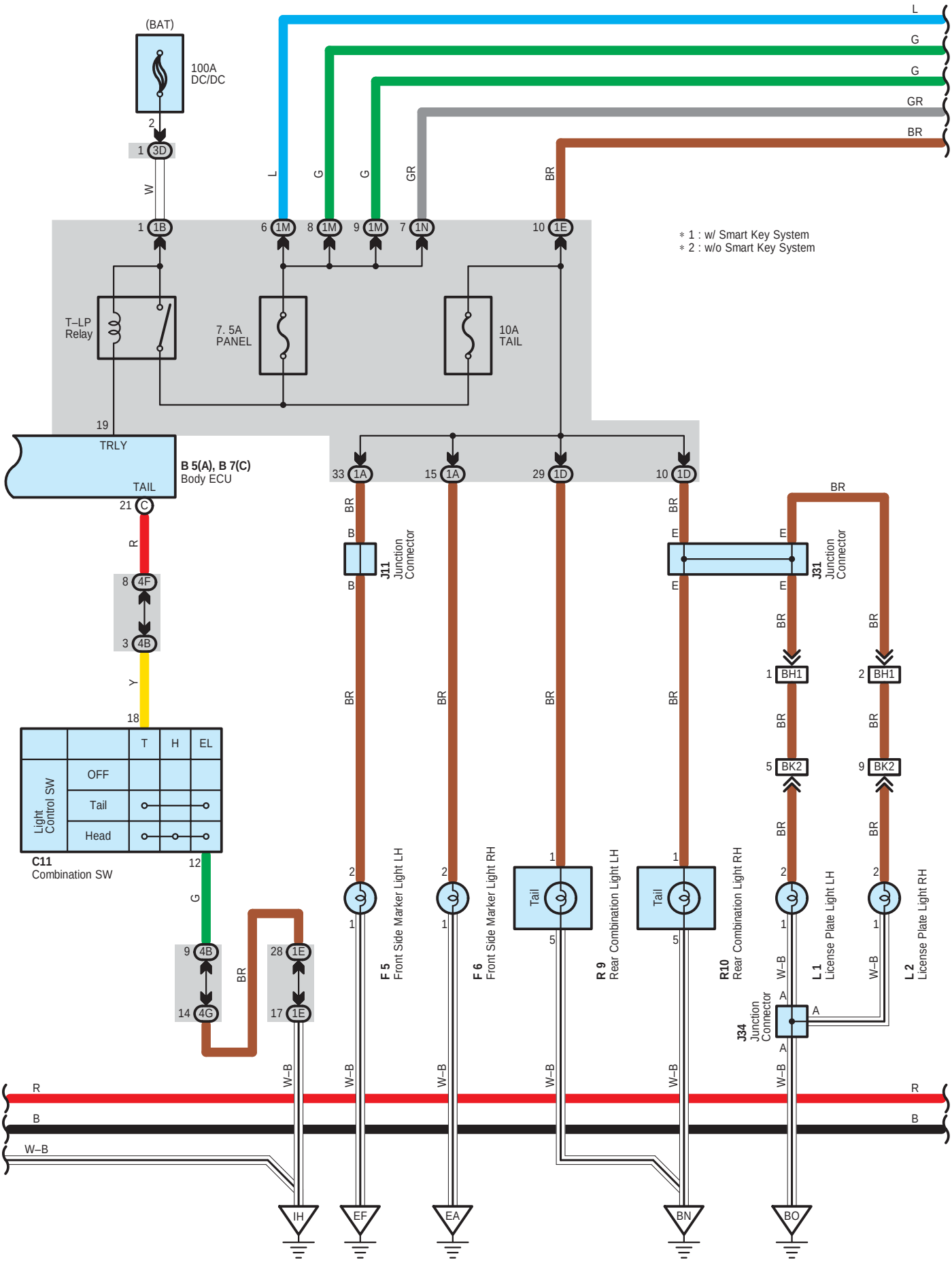

cardiagn.com

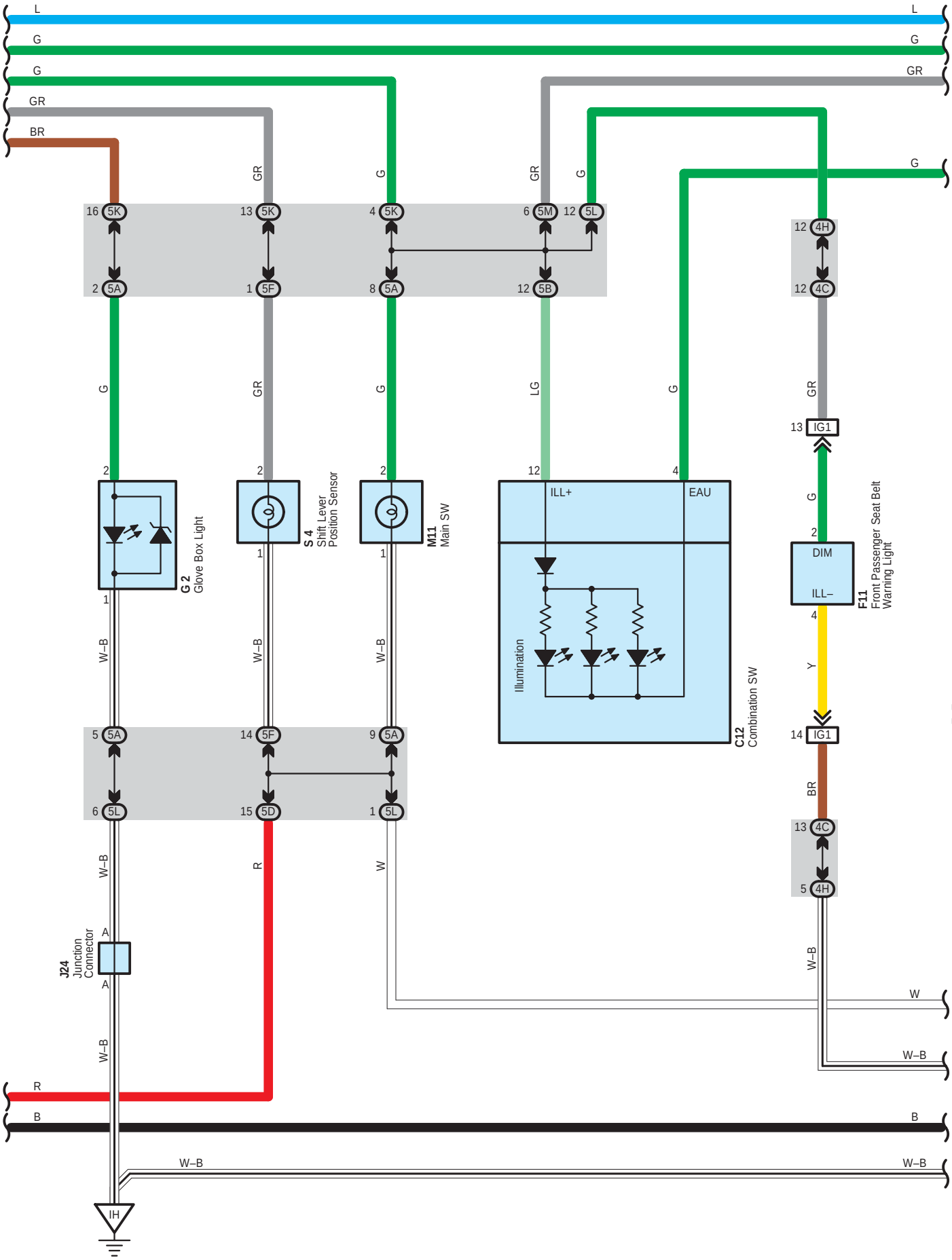

cardiagn.com

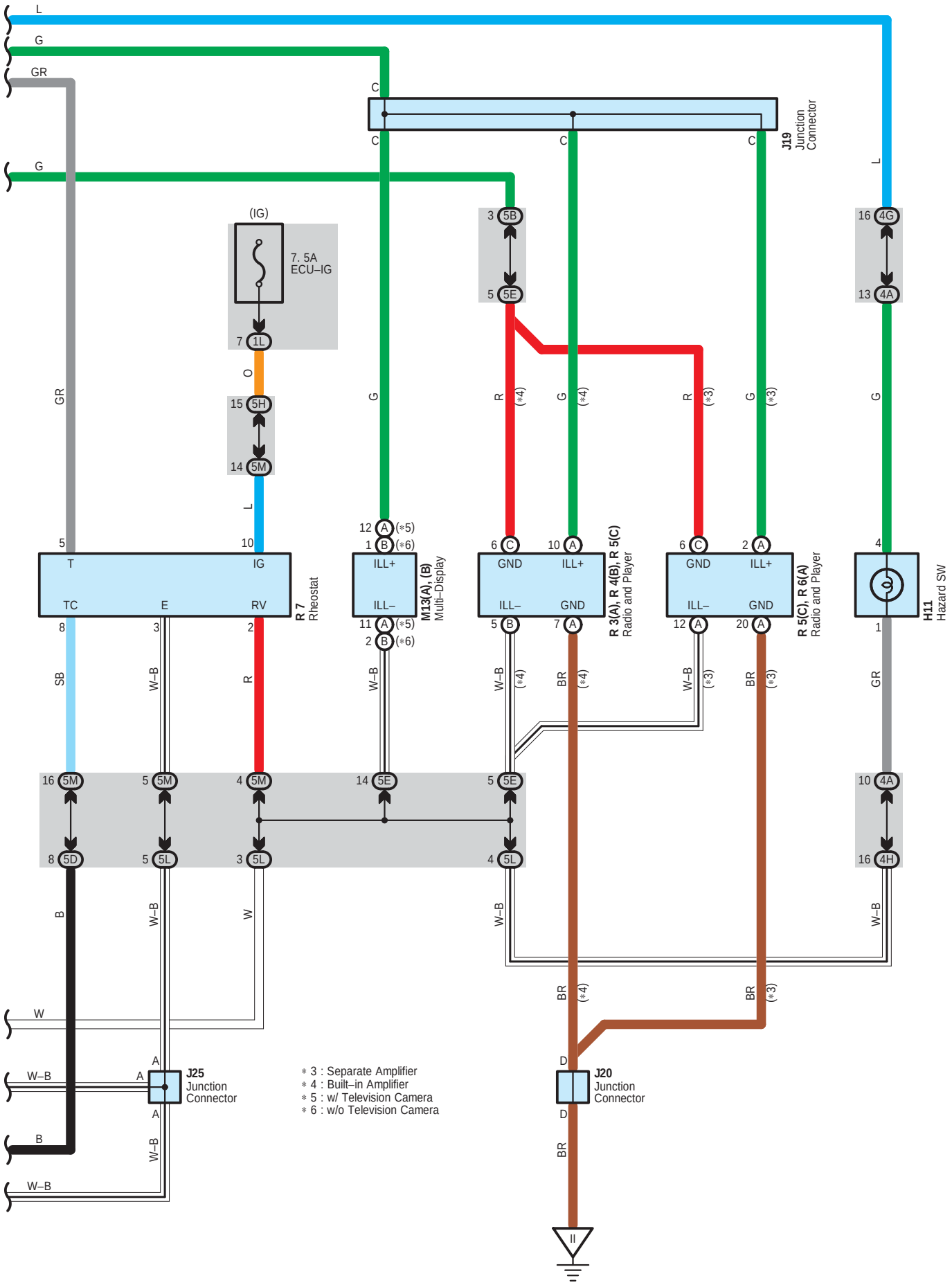

cardiagn.com

○ : **Parts Location**

Code	See Page	Code	See Page	Code	See Page
A8	48	J11	50	P11	51
B5 A	48	J19	50	R3 A	51
B7 C	48	J20	50	R4 B	51
C10	49	J24	50	R5 C	51
C11	49	J25	50	R6 A	51
C12	49	J31	53	R7	51
F5	46	J34	53	R9	54
F6	46	L1	53	R10	54
F11	49	L2	53	S4	51
G1	49	M11	50	S11	51
G2	49	M13 A	50	T4	51
H11	49	M13 B	50	T5	51
J6	50	P6	51	T11	51

▭ : **Relay Blocks**

Code	See Page	Relay Blocks (Relay Block Location)
3	22	Engine Room R/B (Engine Compartment Left)

cardiagn.com

: **Junction Block and Wire Harness Connector**

Code	See Page	Junction Block and Wire Harness (Connector Location)
1A	30	Engine Room Main Wire and Driver Side J/B (Lower Finish Panel)
1B		
1D	30	Floor Wire and Driver Side J/B (Lower Finish Panel)
1E	30	Instrument Panel Wire and Driver Side J/B (Lower Finish Panel)
1G		
1L	31	
1M		
1N		
3D	23	Engine Room Main Wire and Engine Room J/B (Engine Compartment Left)
3I	24	
4A	38	Instrument Panel Wire and Center Connector No.1 (Behind the Combination Meter)
4B		
4C		
4D		
4F		
4G		
4H		
4I		
4J		
4K		
4L		
5A	42	Instrument Panel Wire and Center Connector No.2 (Instrument Panel Brace RH)
5B		
5C		
5D		
5E		
5F		
5G		
5H		
5J		
5K		
5L		
5M		

: **Connector Joining Wire Harness and Wire Harness**

Code	See Page	Joining Wire Harness and Wire Harness (Connector Location)
IA1	58	Engine Room Main Wire and Instrument Panel Wire (Upper Parts of Front Body Pillar LH)
IG1	59	Instrument Panel Wire and Instrument Panel No.2 Wire (Behind the Combination Meter)
IG2		
II1	59	Engine Wire and Instrument Panel Wire (Behind the Glove Box)
BH1	61	Back Door No.1 Wire and Floor Wire (Rear Side of Roof Panel)
BK2	61	Back Door No.1 Wire and Back Door No.2 Wire (Rear Side of Roof Panel)

: **Ground Points**

Code	See Page	Ground Points Location
EA	56	Right Side of the Fender Apron
EF	56	Left Side of the Suspension Tower
IH	58	Cowl Side Panel LH
II	58	Instrument Panel Brace LH
BN	60	Lower Back Panel Center
BO	60	Center of the Back Door Panel

cardiagn.com

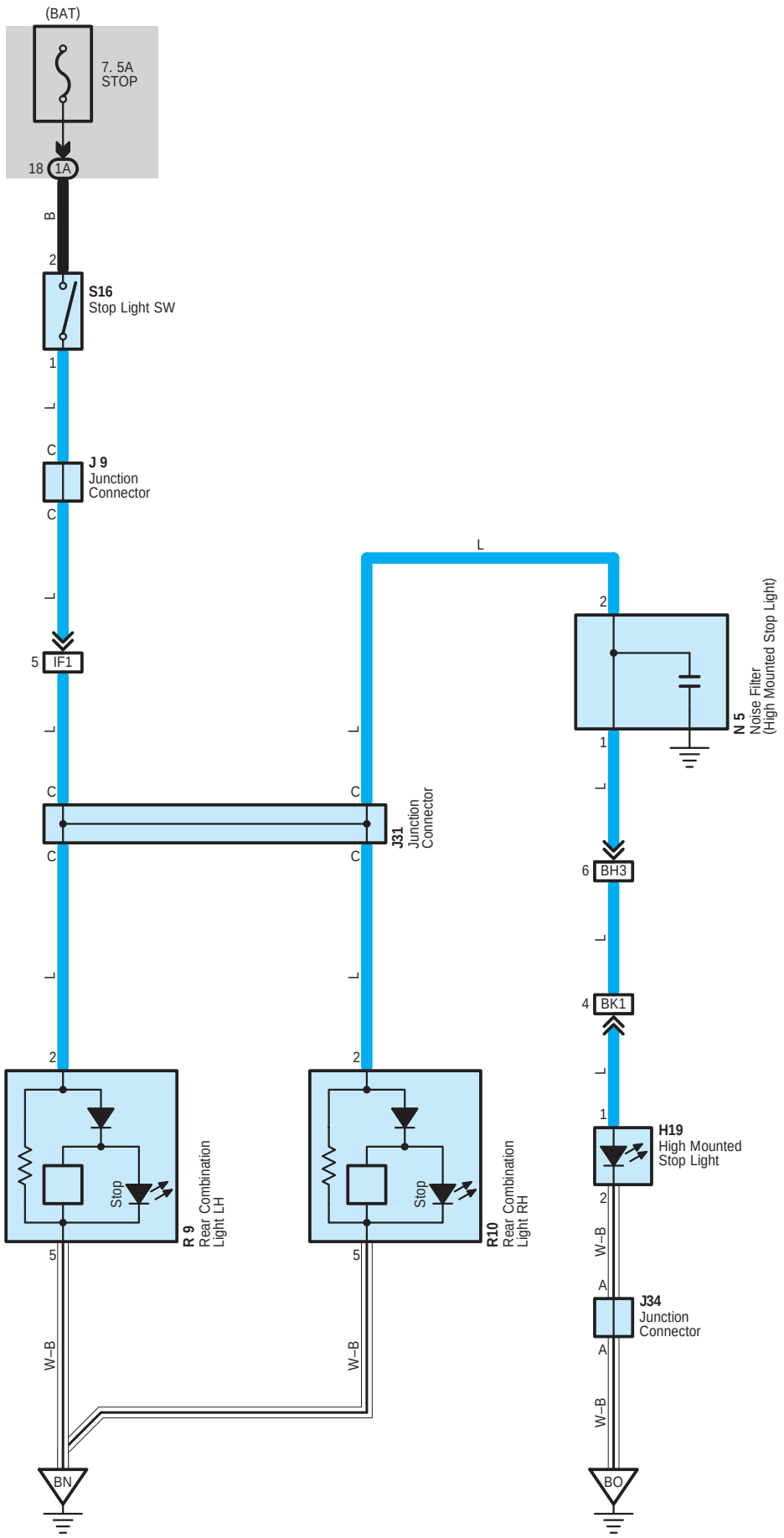

cardiagn.com

○ : **Parts Location**

Code	See Page	Code	See Page	Code	See Page
H19	53	J34	53	R10	54
J9	50	N5	54	S16	51
J31	53	R9	54		

: **Junction Block and Wire Harness Connector**

Code	See Page	Junction Block and Wire Harness (Connector Location)
1A	30	Engine Room Main Wire and Driver Side J/B (Lower Finish Panel)

: **Connector Joining Wire Harness and Wire Harness**

Code	See Page	Joining Wire Harness and Wire Harness (Connector Location)
IF1	58	Floor Wire and Engine Room Main Wire (Left Kick Panel)
BH3	61	Back Door No.1 Wire and Floor Wire (Rear Side of Roof Panel)
BK1	61	Back Door No.1 Wire and Back Door No.2 Wire (Rear Side of Roof Panel)

▽ : **Ground Points**

Code	See Page	Ground Points Location
BN	60	Lower Back Panel Center
BO	60	Center of the Back Door Panel

cardiagn.com

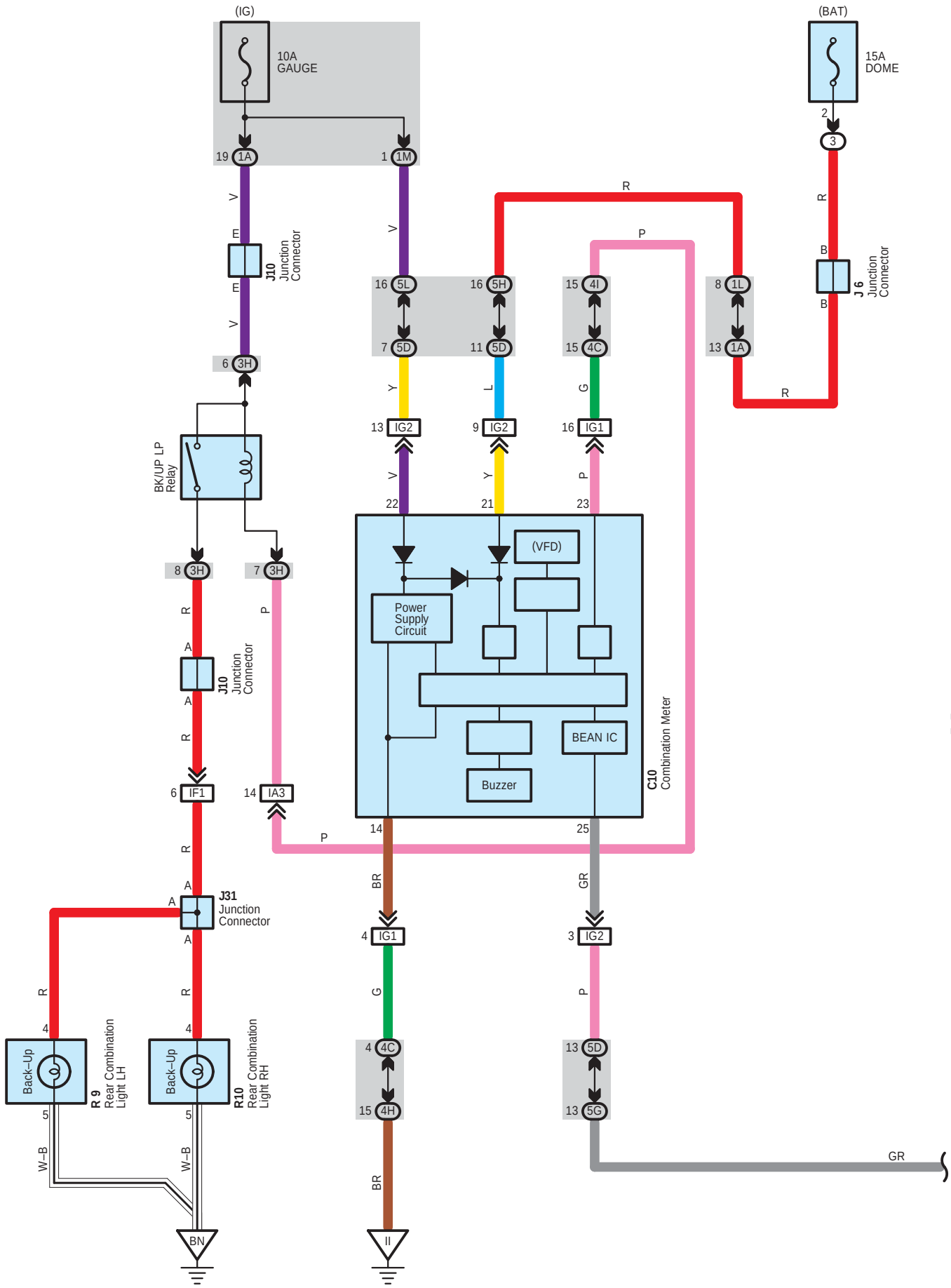

cardiagn.com

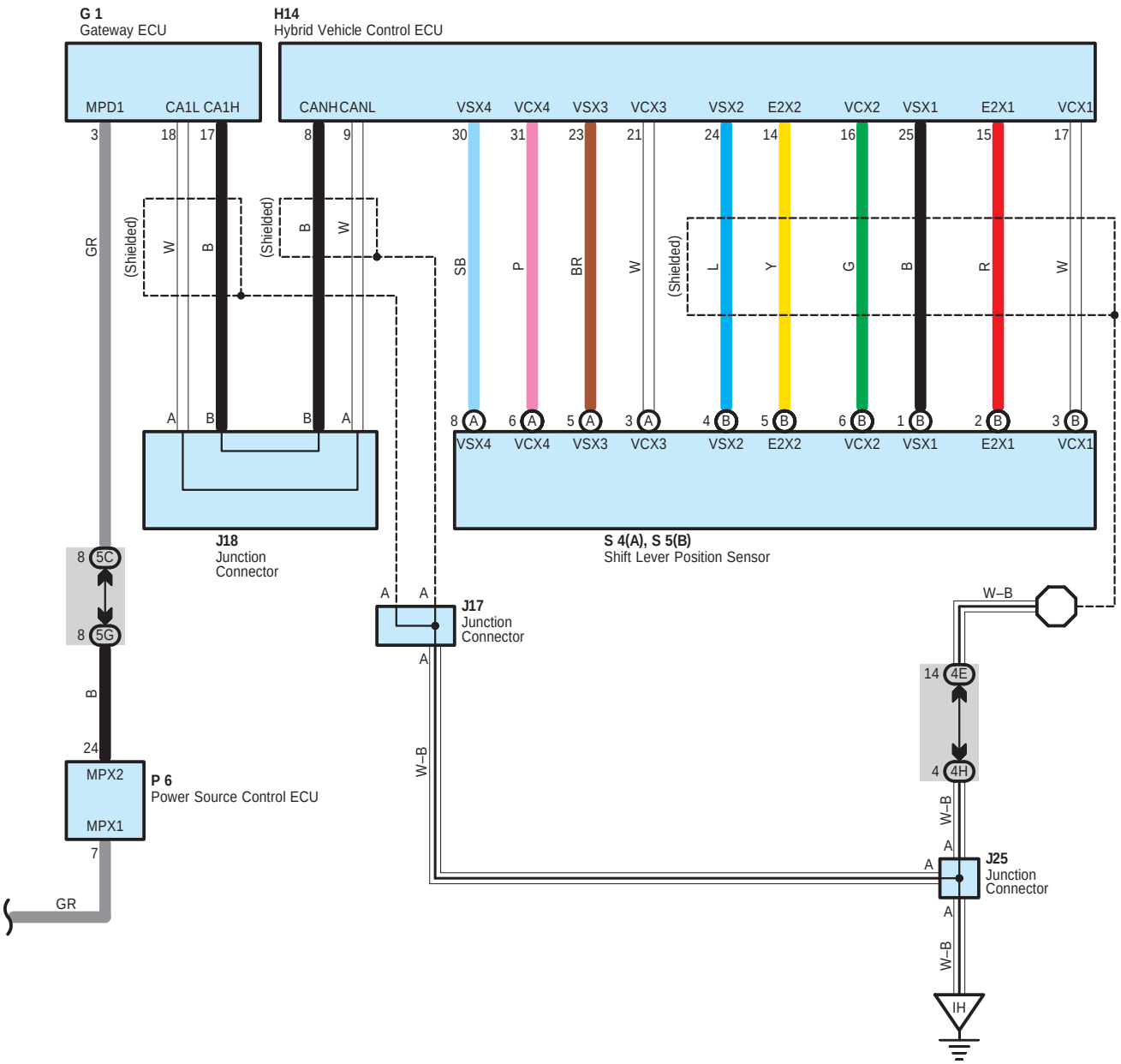

cardiagn.com

Back–Up Light

: Parts Location

Code	See Page	Code	See Page	Code		See Page
C10	49	J17	50	R9		54
G1	49	J18	50	R10		54
H14	49	J25	50	S4	A	51
J6	50	J31	53	S5	B	51
J10	50	P6	51			

: Relay Blocks

Code	See Page	Relay Blocks (Relay Block Location)
3	22	Engine Room R/B (Engine Compartment Left)

: Junction Block and Wire Harness Connector

Code	See Page	Junction Block and Wire Harness (Connector Location)
1A	30	Engine Room Main Wire and Driver Side J/B (Lower Finish Panel)
1L	31	Instrument Panel Wire and Driver Side J/B (Lower Finish Panel)
1M		
3H	24	Engine Room Main Wire and Engine Room J/B (Engine Compartment Left)
4C	38	Instrument Panel Wire and Center Connector No.1 (Behind the Combination Meter)
4E		
4H		
4I		
5C	42	Instrument Panel Wire and Center Connector No.2 (Instrument Panel Brace RH)
5D		
5G		
5H		
5L		

: Connector Joining Wire Harness and Wire Harness

Code	See Page	Joining Wire Harness and Wire Harness (Connector Location)
IA3	58	Engine Room Main Wire and Instrument Panel Wire (Upper Parts of Front Body Pillar LH)
IF1	58	Floor Wire and Engine Room Main Wire (Left Kick Panel)
IG1	59	Instrument Panel Wire and Instrument Panel No.2 Wire (Behind the Combination Meter)
IG2		

: Ground Points

Code	See Page	Ground Points Location
IH	58	Cowl Side Panel LH
II	58	Instrument Panel Brace LH
BN	60	Lower Back Panel Center

cardiagn.com

cardiagn.com

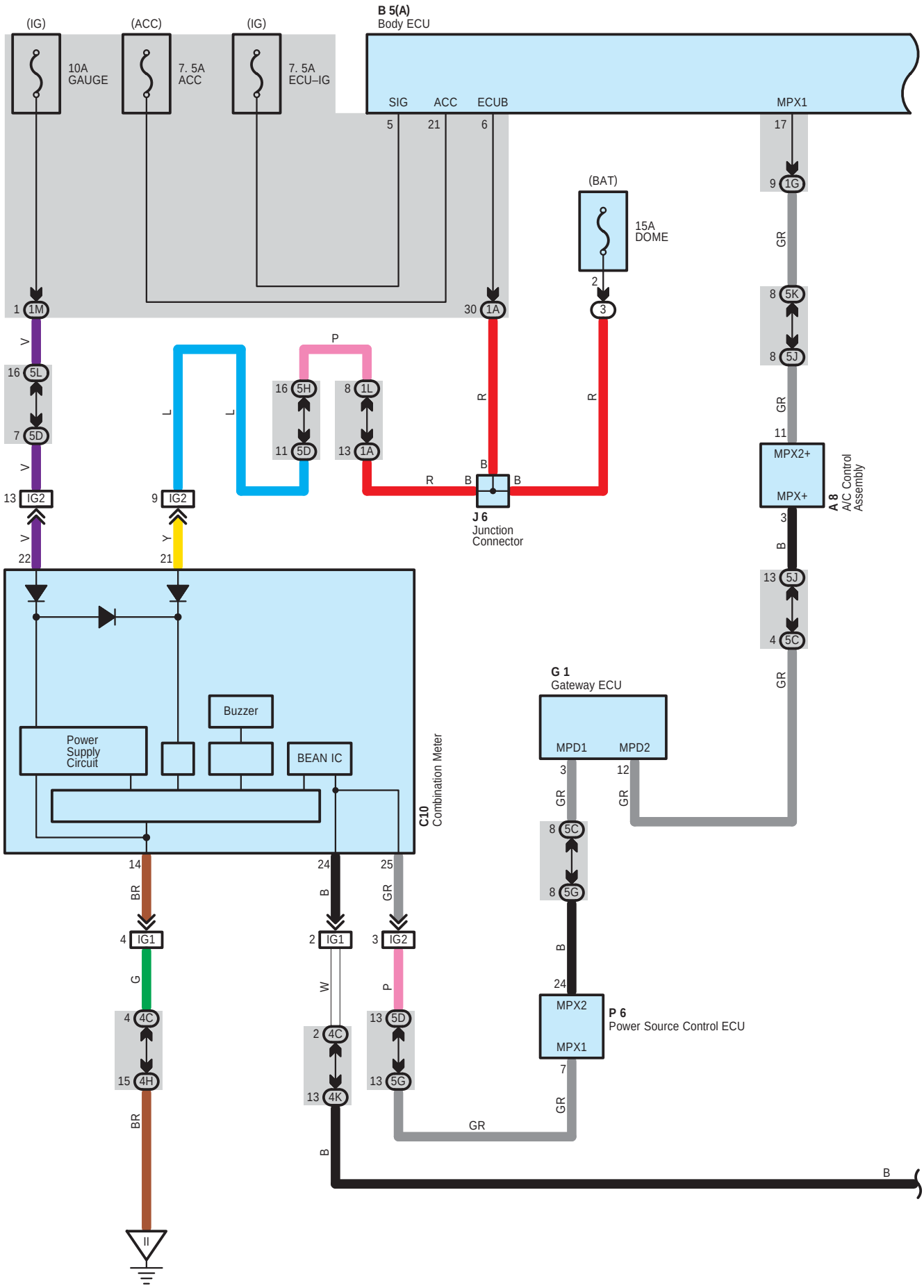

cardiagn.com

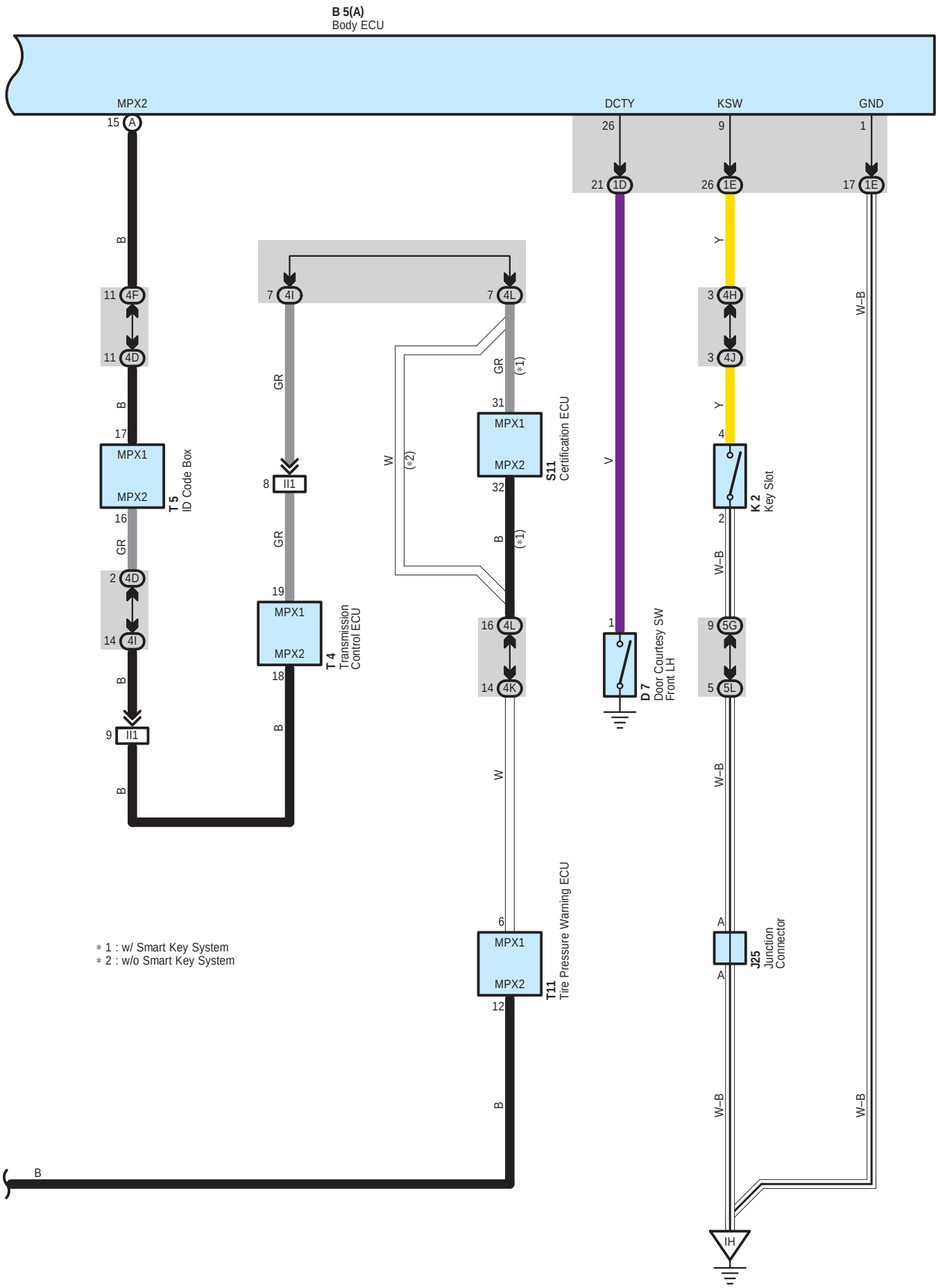

cardiagn.com

Key Reminder

System Outline

Key Reminder System

If the driver's side door is opened with the power supply set at ACC or OFF position and with the electrical key remained in the key slot, signal from key slot is input to TERMINAL KSW of body ECU and that from courtesy SW at driver's side is input to TERMINAL DCTY of body ECU. The signal from body ECU to combination meter activates warning buzzer to send a message to the driver that electrical key remains in the key slot.

: Parts Location

Code	See Page	Code	See Page	Code	See Page
A8	48	J6	50	T4	51
B5 A	48	J25	50	T5	51
C10	49	K2	50	T11	51
D7	52	P6	51		
G1	49	S11	51		

: Relay Blocks

Code	See Page	Relay Blocks (Relay Block Location)
3	22	Engine Room R/B (Engine Compartment Left)

: Junction Block and Wire Harness Connector

Code	See Page	Junction Block and Wire Harness (Connector Location)
1A	30	Engine Room Main Wire and Driver Side J/B (Lower Finish Panel)
1D	30	Floor Wire and Driver Side J/B (Lower Finish Panel)
1E	30	Instrument Panel Wire and Driver Side J/B (Lower Finish Panel)
1G		
1L	31	
1M		
4C	38	Instrument Panel Wire and Center Connector No.1 (Behind the Combination Meter)
4D		
4F		
4H		
4I		
4J		
4K		
4L		
5C	42	Instrument Panel Wire and Center Connector No.2 (Instrument Panel Brace RH)
5D		
5G		
5H		
5J		
5K		
5L		

: Connector Joining Wire Harness and Wire Harness

Code	See Page	Joining Wire Harness and Wire Harness (Connector Location)
IG1	59	Instrument Panel Wire and Instrument Panel No.2 Wire (Behind the Combination Meter)
IG2		
II1	59	Engine Wire and Instrument Panel Wire (Behind the Glove Box)

: Ground Points

Code	See Page	Ground Points Location
IH	58	Cowl Side Panel LH
II	58	Instrument Panel Brace LH

cardiagn.com

cardiagn.com

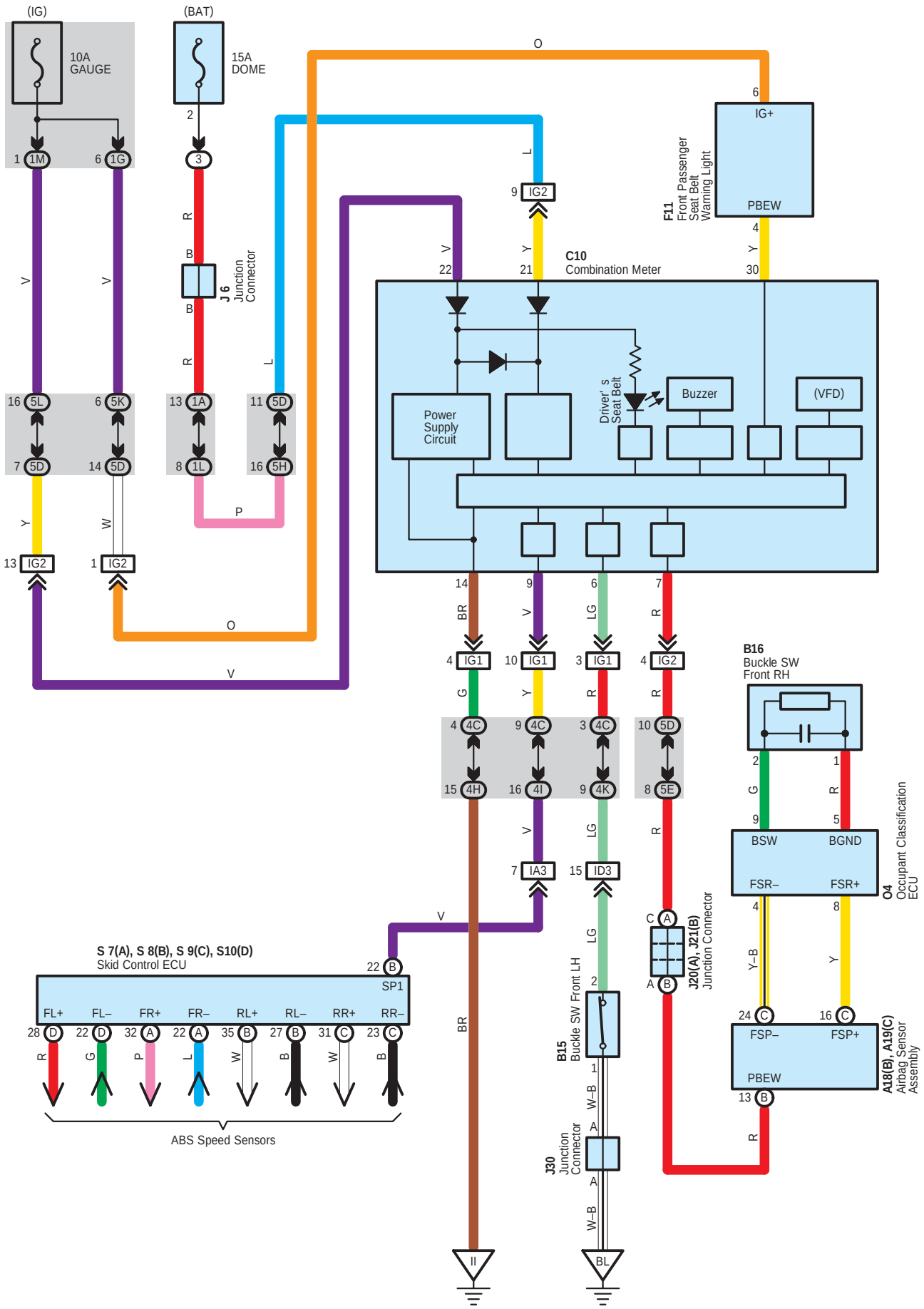

cardiagn.com

System Outline

If the driver does not have seat belt fastened when power SW is turned to IG ON position, the indicator in combination meter lights up. Buzzer sound for 6 seconds reminds the driver of seat belt fastening. After that, if seat belt has not been fastened yet, another buzzer sound goes on for 30 seconds when vehicle speed is 15 km/h or more. The buzzer sound also goes on when the driver unfastens seat belt from fastening condition with vehicle speed over 15 km/h.
Sensor installed in front passenger seat detects whether passenger(s) is(are) seated on front passenger seat(s). If a passenger does not have seat belt fastened in front seat, passenger seat belt warning light blinks.

: Parts Location

Code		See Page	Code		See Page	Code		See Page
A18	B	48	F11		49	O4		54
A19	C	48	J6		50	S7	A	51
B15		52	J20	A	50	S8	B	51
B16		52	J21	B	50	S9	C	51
C10		49	J30		53	S10	D	51

: Relay Blocks

Code	See Page	Relay Blocks (Relay Block Location)
3	22	Engine Room R/B (Engine Compartment Left)

: Junction Block and Wire Harness Connector

Code	See Page	Junction Block and Wire Harness (Connector Location)
1A	30	Engine Room Main Wire and Driver Side J/B (Lower Finish Panel)
1G	30	Instrument Panel Wire and Driver Side J/B (Lower Finish Panel)
1L	31	
1M		
4C	38	Instrument Panel Wire and Center Connector No.1 (Behind the Combination Meter)
4H		
4I		
4K		
5D	42	Instrument Panel Wire and Center Connector No.2 (Instrument Panel Brace RH)
5E		
5H		
5K		
5L		

: Connector Joining Wire Harness and Wire Harness

Code	See Page	Joining Wire Harness and Wire Harness (Connector Location)
IA3	58	Engine Room Main Wire and Instrument Panel Wire (Upper Parts of Front Body Pillar LH)
ID3	58	Instrument Panel Wire and Floor Wire (Left Kick Panel)
IG1	59	Instrument Panel Wire and Instrument Panel No.2 Wire (Behind the Combination Meter)
IG2		

: Ground Points

Code	See Page	Ground Points Location
II	58	Instrument Panel Brace LH
BL	60	Rear Side of Left Quarter Panel

cardiagn.com

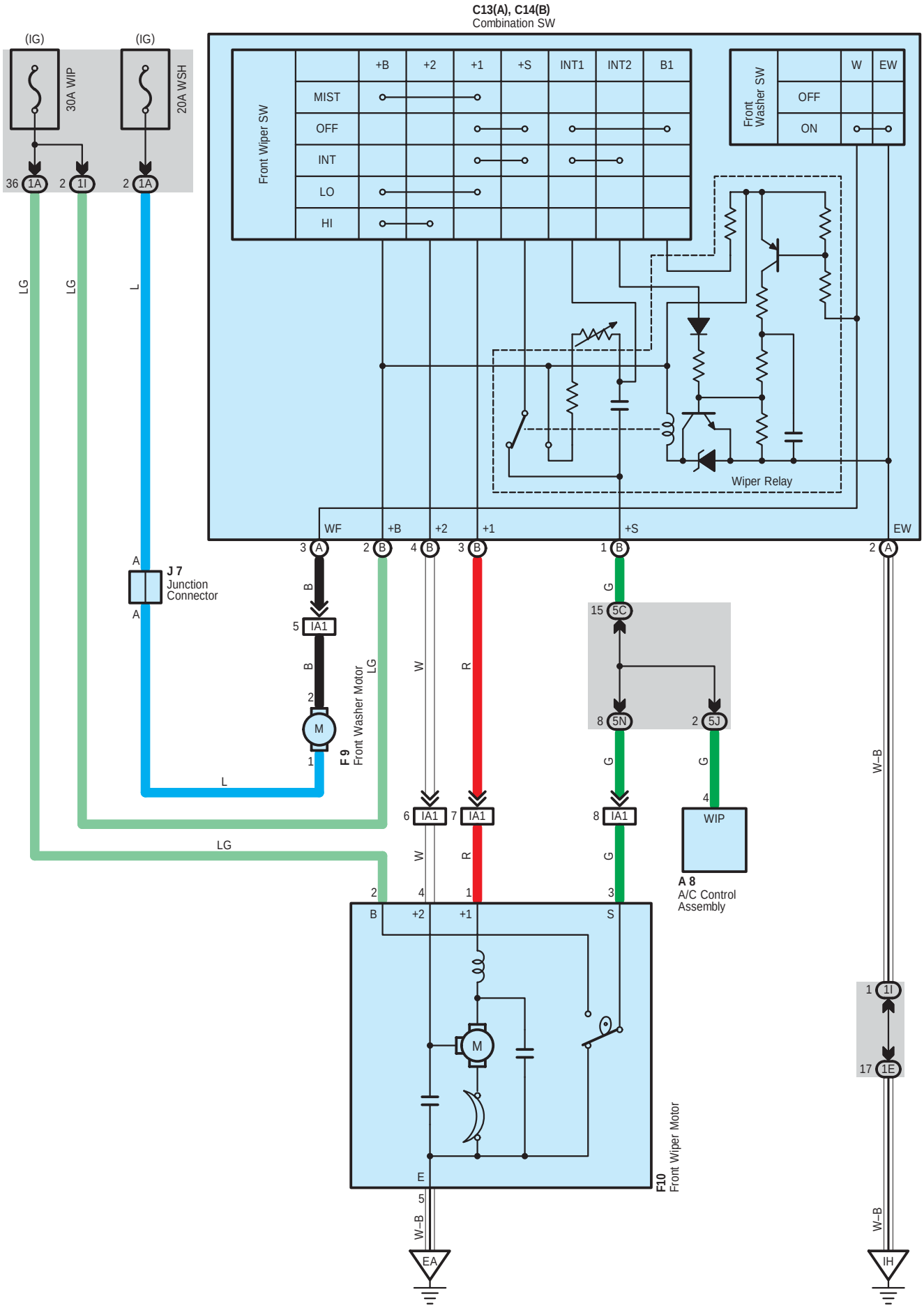

cardiagn.com

System Outline

With the power SW pushed to IG ON position, the current flows to TERMINAL (B) 2 of the wiper and washer SW, and TERMINAL 2 of the front wiper motor through the WIP fuse.

1. Low Speed Position

With the wiper and washer SW turned to LO position, the current flows from TERMINAL (B) 2 of the wiper and washer SW to TERMINAL (B) 3 to TERMINAL 5 of the front wiper motor to TERMINAL 4 to GROUND, which runs the front wiper motor at low speed.

2. High Speed Position

With the wiper and washer SW turned to HI position, the current flows from TERMINAL (B) 2 of the wiper and washer SW to TERMINAL (B) 4 to TERMINAL 3 of the front wiper motor to TERMINAL 4 to GROUND, which runs the front wiper motor at high speed.

3. INT Position

With the wiper and washer SW turned to INT position, the wiper relay operates and current flows from TERMINAL (B) 2 of the wiper and washer SW to TERMINAL (A) 2 to GROUND. This activates the intermittent circuit and the current flows from TERMINAL (B) 2 of the wiper and washer SW to TERMINAL (B) 3 to TERMINAL 5 of the front wiper motor to TERMINAL 4 to GROUND and then the wiper operates. Intermittent operation is controlled by a condenser's charge and discharge function in the relay.

4. Washer Interlocking Operation

With the wiper and washer SW pulled to washer position (Washer SW ON position), the current flows from the WSH fuse to TERMINAL 1 of the front washer motor to TERMINAL 2 to TERMINAL (A) 3 of the wiper and washer SW to TERMINAL (A) 2 to GROUND and runs the washer motor and the window washer to spray. Simultaneously, current flows from the WIP fuse to TERMINAL (B) 2 of the wiper and washer SW to TERMINAL (B) 3 to TERMINAL 5 of the front wiper motor to TERMINAL 4 to GROUND, which activates the wiper.

: Parts Location

Code	See Page	Code	See Page	Code	See Page
A8	48	C14 B	49	F10	46
C13 A	49	F9	46	J7	50

: Junction Block and Wire Harness Connector

Code	See Page	Junction Block and Wire Harness (Connector Location)
1A	30	Engine Room Main Wire and Driver Side J/B (Lower Finish Panel)
1E	30	Instrument Panel Wire and Driver Side J/B (Lower Finish Panel)
1I		
5C	42	Instrument Panel Wire and Center Connector No.2 (Instrument Panel Brace RH)
5J		
5N		

: Connector Joining Wire Harness and Wire Harness

Code	See Page	Joining Wire Harness and Wire Harness (Connector Location)
IA1	58	Engine Room Main Wire and Instrument Panel Wire (Upper Parts of Front Body Pillar LH)

: Ground Points

Code	See Page	Ground Points Location
EA	56	Right Side of the Fender Apron
IH	58	Cowl Side Panel LH

cardiagn.com

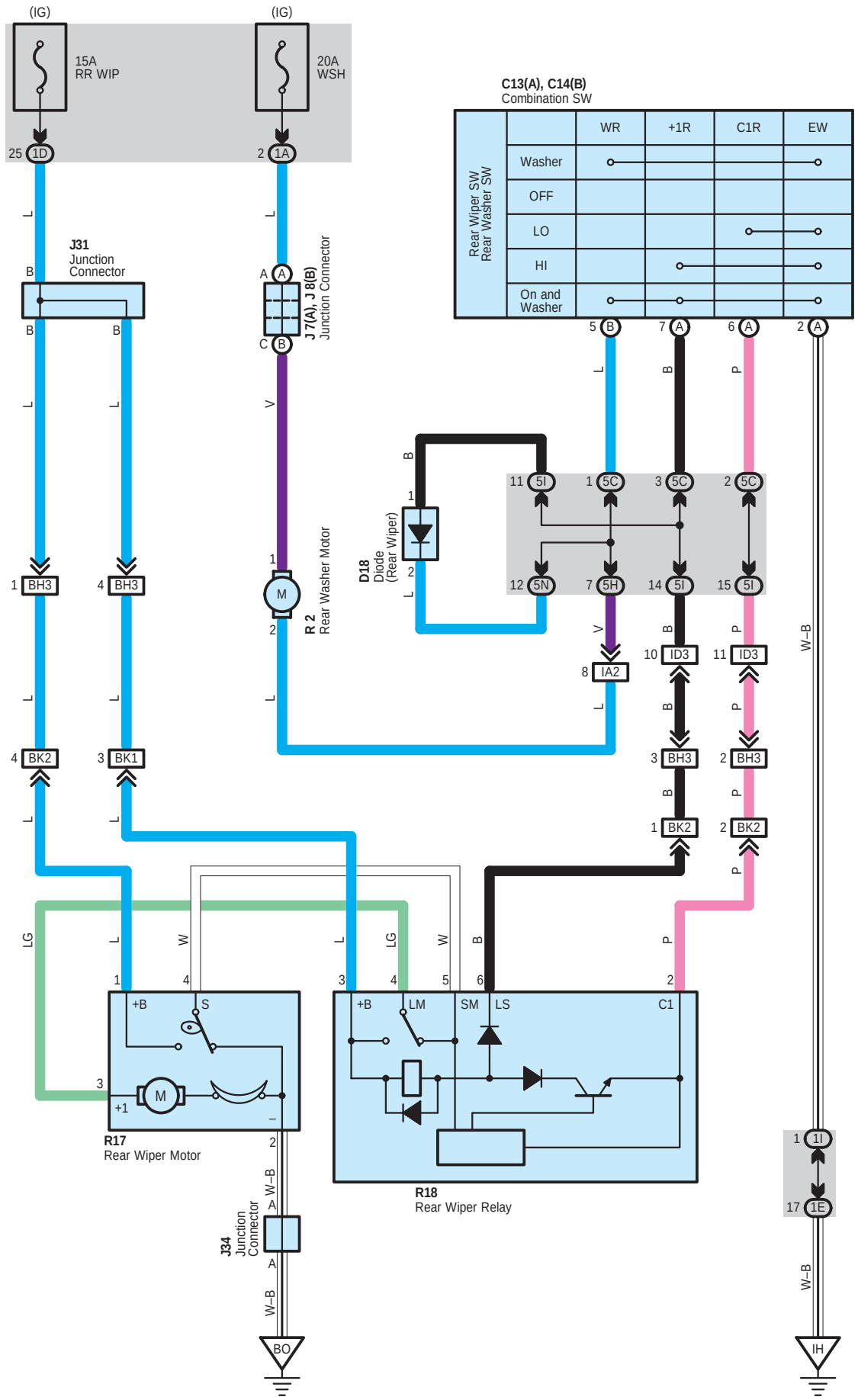

cardiagn.com

System Outline

When the power SW is pushed to IG ON position, the current flows from the WSH fuse to rear washer motor TERMINAL 1, and the current flows from the RR WIP fuse to rear wiper relay TERMINAL 3, and to the rear wiper motor TERMINAL 1 respectively.

1. Rear Wiper Normal Operation

When the power SW is pushed to IG ON position, and the rear wiper and washer SW is turned to HI position, the current flows from the rear wiper relay TERMINAL 3 to TERMINAL 6 to the rear wiper and washer SW TERMINAL (A) 7 to TERMINAL (A) 2 to GROUND, and turns on the rear wiper relay. As a result, the current flows from the rear wiper relay TERMINAL 3 to TERMINAL 4 to the rear wiper motor TERMINAL 3 to TERMINAL 2 to GROUND, and operates the rear wiper.

2. Rear Wiper Intermittent Operation

When the power SW is pushed to IG ON position, and the rear wiper and washer SW is turned to LO position, the current flows from the rear wiper relay TERMINAL 3 to TERMINAL 2 to the rear wiper and washer SW TERMINAL (A) 6 to TERMINAL (A) 2 to GROUND, and the intermittent circuit in the rear wiper relay is controlled to operate the wiper intermittently.

3. Washer Operation

With the power SW is pushed to IG ON position, and the rear wiper and washer SW turned to ON position, when the washer is turned ON (to Wiper HI side), current to TERMINAL 1 of the washer motor flows to TERMINAL 2 of the motor to TERMINAL 5 of the rear wiper and washer SW to TERMINAL 2 to GROUND so that the washer motor rotates and the window washer emits water.

With the power SW is pushed to IG ON position, and the rear wiper and washer SW turned to OFF position, when the washer is turned ON (to Wiper OFF side), current flows as above so that the washer motor rotates and the window washer emits water as well as the wiper operates.

: Parts Location

Code		See Page	Code		See Page	Code	See Page
C13	A	49	J8	B	50	R17	54
C14	B	49	J31		53	R18	54
D18		49	J34		53		
J7	A	50	R2		47		

: Junction Block and Wire Harness Connector

Code	See Page	Junction Block and Wire Harness (Connector Location)
1A	30	Engine Room Main Wire and Driver Side J/B (Lower Finish Panel)
1D	30	Floor Wire and Driver Side J/B (Lower Finish Panel)
1E	30	Instrument Panel Wire and Driver Side J/B (Lower Finish Panel)
1I		
5C	42	Instrument Panel Wire and Center Connector No.2 (Instrument Panel Brace RH)
5H		
5I		
5N		

: Connector Joining Wire Harness and Wire Harness

Code	See Page	Joining Wire Harness and Wire Harness (Connector Location)
IA2	58	Engine Room Main Wire and Instrument Panel Wire (Upper Parts of Front Body Pillar LH)
ID3	58	Instrument Panel Wire and Floor Wire (Left Kick Panel)
BH3	61	Back Door No.1 Wire and Floor Wire (Rear Side of Roof Panel)
BK1	61	Back Door No.1 Wire and Back Door No.2 Wire (Rear Side of Roof Panel)
BK2		

: Ground Points

Code	See Page	Ground Points Location
IH	58	Cowl Side Panel LH
BO	60	Center of the Back Door Panel

cardiagn.com

Power Window

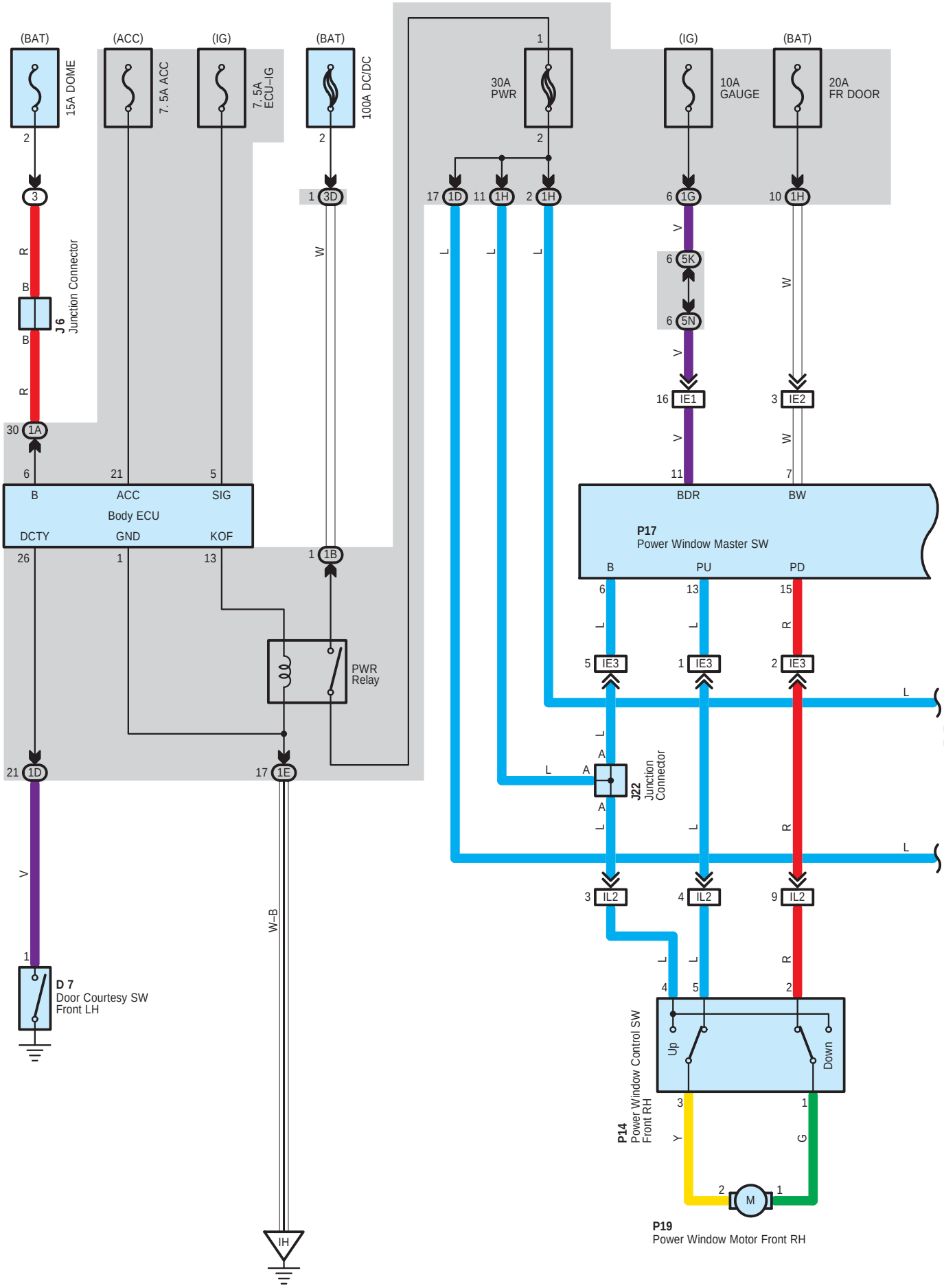

cardiagn.com

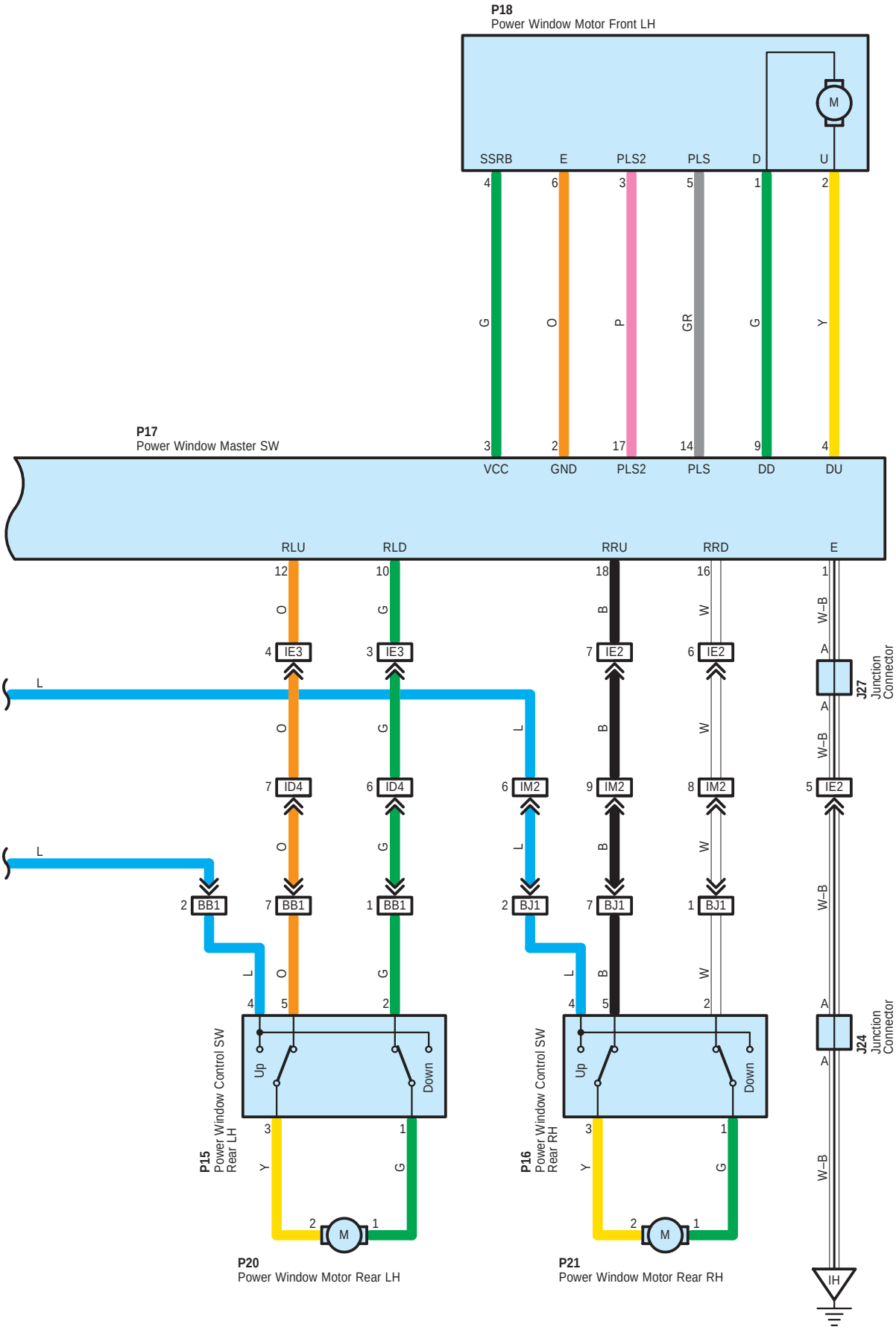

cardiagn.com

System Outline

1. Manual Up and Down Function

This function operates the window to open or close while the power window switch is being pulled up or pushed down (Driver's SW should be pulled up and down halfway for manual operation.). The window stops as soon as the switch is released.

2. Driver's Door One–Touch Auto Up and Down Function

"The driver's door one–touch auto up and down function" enables the window of front doors to be fully opened or closed with a touch of the power window switch.

3. Jam Protection Function (Driver's Door)

The jam protection function automatically stops the power window and moves it downward if a foreign object gets jammed in the course of the window during one–touch auto–up operation.

4. Remote Control Function

The up and down operation of the front passenger door windows and the rear door windows can be controlled by operating the power window master switch.

5. Key–Off Operation Function

For about 43 seconds after pushing OFF the power SW or opening the driver's side door, this function enables the power window master switch to operate all the door windows and enables the switch of each passenger's door to operate each window manually. Please note that the function becomes unavailable if the driver's side door is shut. (The one–touch auto up and down operation of the driver's side door is included as well)

∗ When the battery terminal or fuse is disconnected, the glass position of all door windows have to be reset to the initial positions, one by one, with the power window control switch by following the procedure below:

A) Reconnect the battery terminal or fuse.

B) Push the power SW to IG ON position

C) Lower the window of each door halfway or more with the power window switch.

D) Then close the window fully with the power window switch.
Do not release the switch for at least one second after the window is fully closed.

: Parts Location

Code	See Page	Code	See Page	Code	See Page
D7	52	P14	54	P19	54
J6	50	P15	54	P20	54
J22	50	P16	54	P21	54
J24	50	P17	54		
J27	53	P18	54		

: Relay Blocks

Code	See Page	Relay Blocks (Relay Block Location)
3	22	Engine Room R/B (Engine Compartment Left)

: Junction Block and Wire Harness Connector

Code	See Page	Junction Block and Wire Harness (Connector Location)
1A	30	Engine Room Main Wire and Driver Side J/B (Lower Finish Panel)
1B		
1D	30	Floor Wire and Driver Side J/B (Lower Finish Panel)
1E	30	Instrument Panel Wire and Driver Side J/B (Lower Finish Panel)
1G		
1H		
3D	23	Engine Room Main Wire and Engine Room J/B (Engine Compartment Left)
5K	42	Instrument Panel Wire and Center Connector No.2 (Instrument Panel Brace RH)
5N		

cardiagn.com

: **Connector Joining Wire Harness and Wire Harness**

Code	See Page	Joining Wire Harness and Wire Harness (Connector Location)
ID4	58	Instrument Panel Wire and Floor Wire (Left Kick Panel)
IE1	58	Front Door LH Wire and Instrument Panel Wire (Left Kick Panel)
IE2		
IE3		
IL2	59	Front Door RH Wire and Instrument Panel Wire (Right Kick Panel)
IM2	59	Instrument Panel Wire and Floor No.2 Wire (Right Kick Panel)
BB1	60	Rear Door No.2 Wire and Floor Wire (Left Center Pillar)
BJ1	61	Rear Door No.1 Wire and Floor No.2 Wire (Right Center Pillar)

: **Ground Points**

Code	See Page	Ground Points Location
IH	58	Cowl Side Panel LH

cardiagn.com

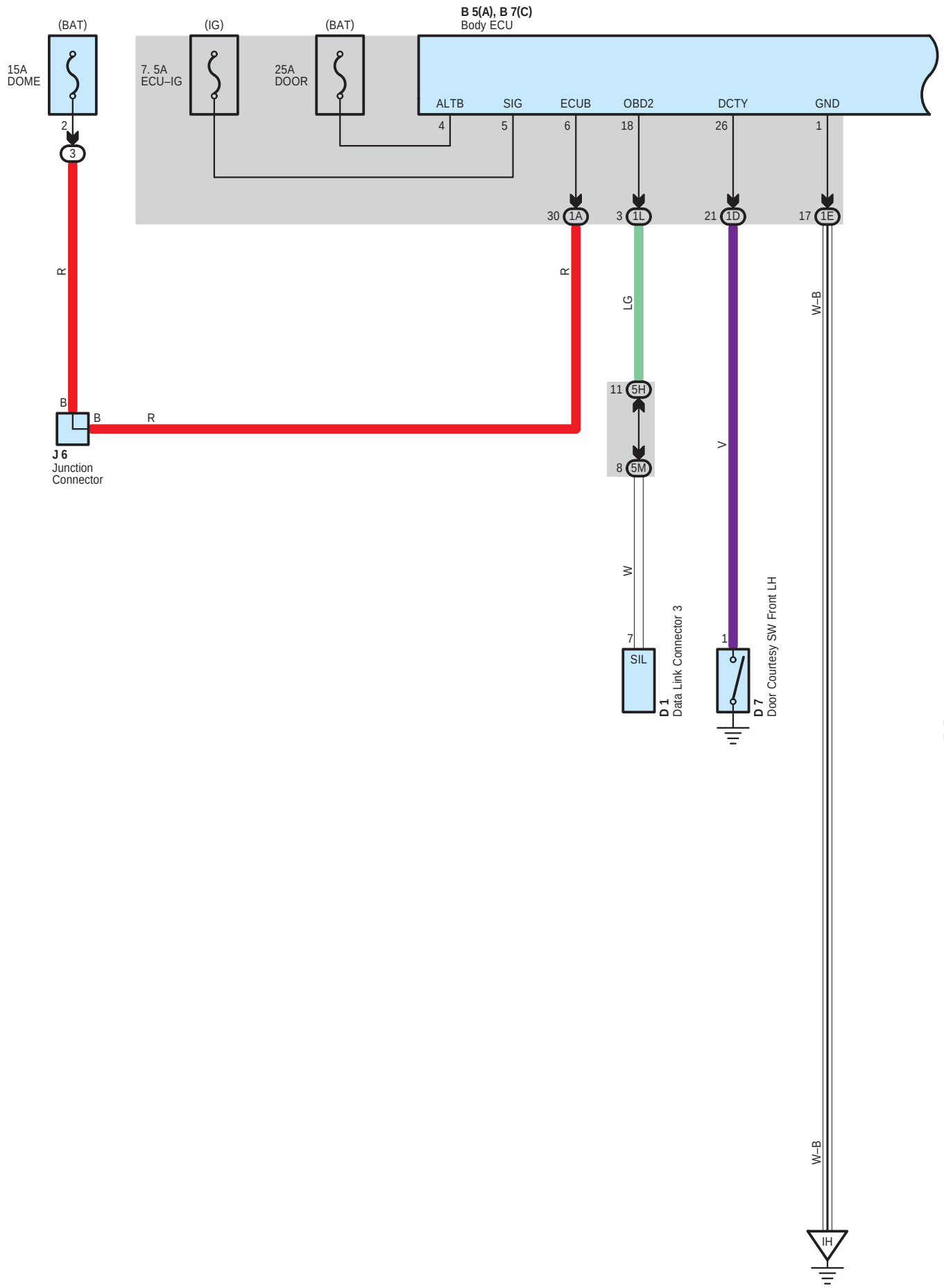

cardiagn.com

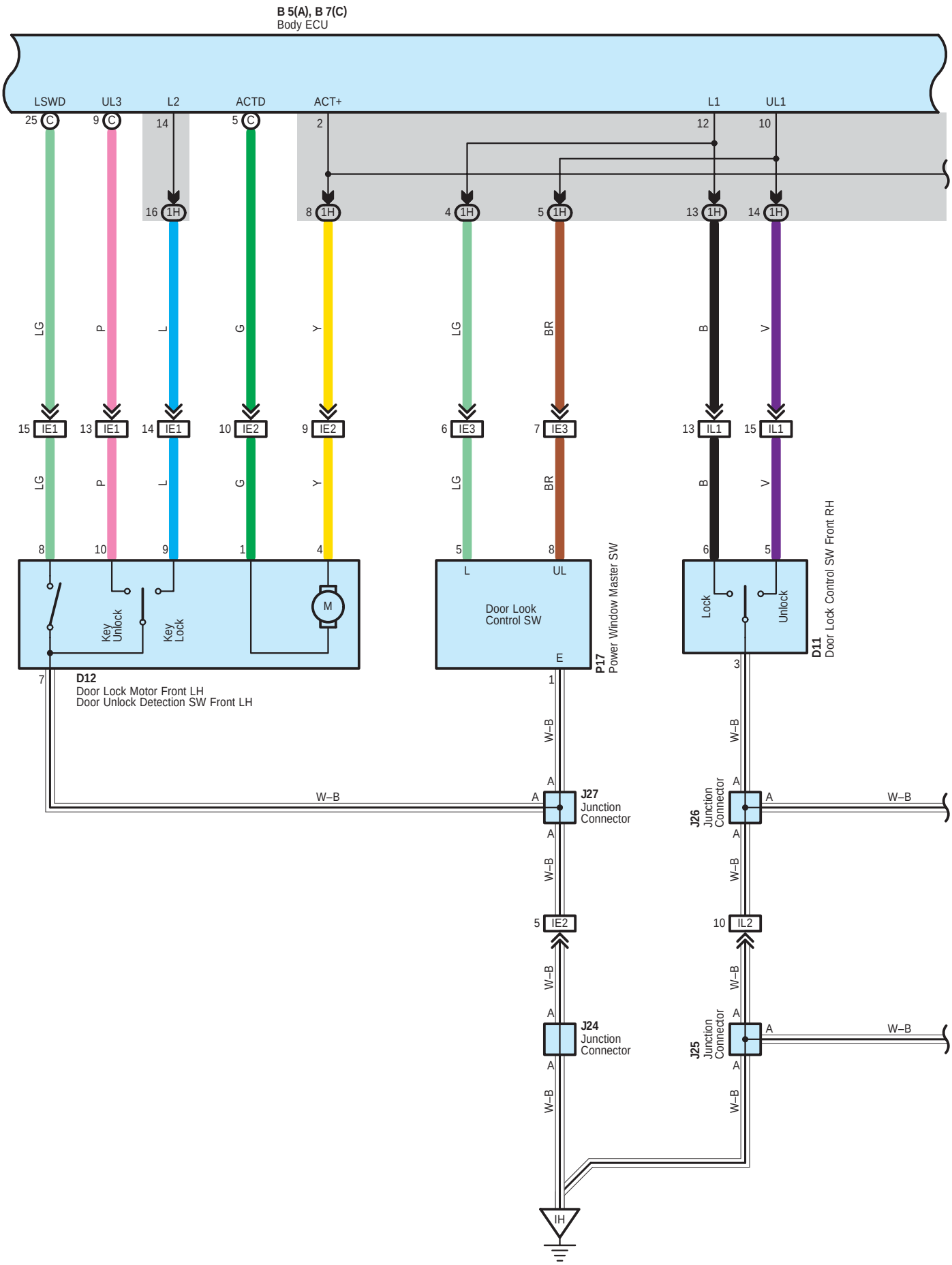

cardiagn.com

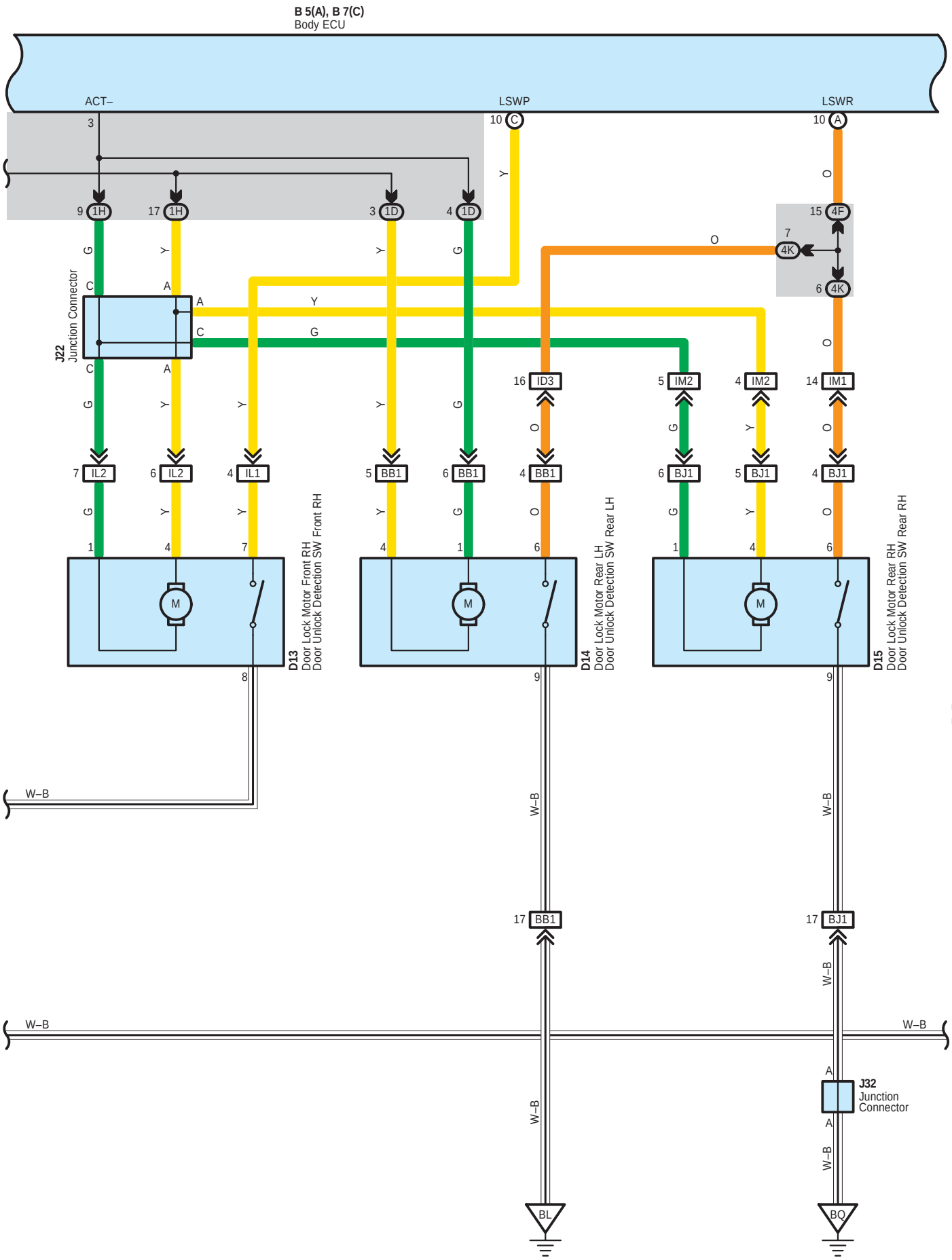

cardiagn.com

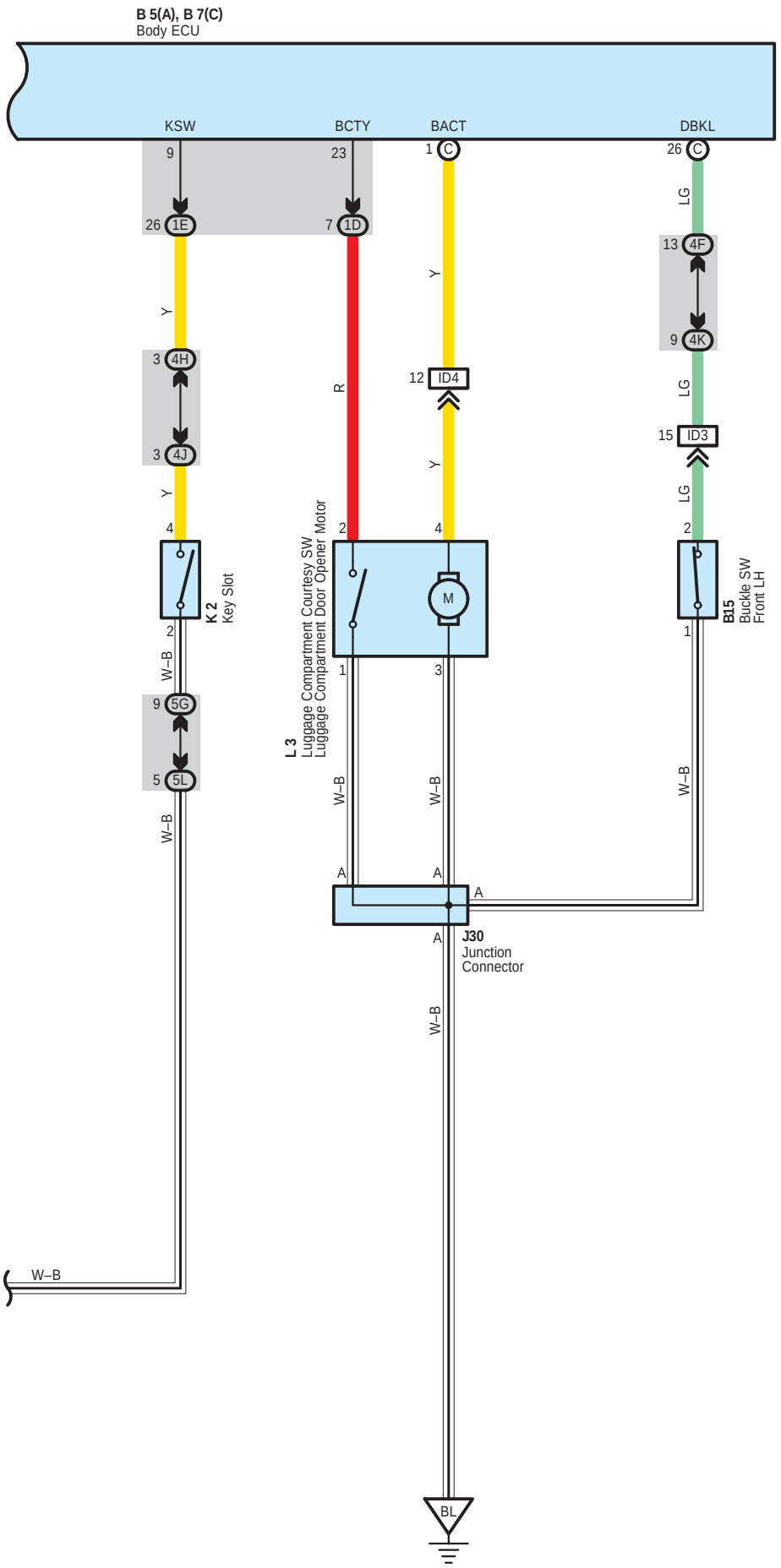

cardiagn.com

Door Lock Control

System Outline

The door lock control is a system controlled by various signals input into the body ECU through communication control of the body ECU etc.

1. Manual Unlock Operation

When the door lock control SW of the driver's or passenger's side door is pushed to UNLOCK, the door unlocks.

2. Manual Lock Operation

When the door lock control SW of the driver's or passenger's side door is pushed to LOCK, the door locks.

3. Door Key Unlock Operation

∗ Unlock operation from driver's side door
When the driver's side door is unlocked once using the mechanical key, only the driver's side door unlocks. If this operation is repeated within 3 seconds, all the other doors also unlock.

4. Ignition Key Reminder Operation

Under condition that the electrical key remains inserted in the key slot and driver's side door is open, locking operation with door knob of driver's door is not effective but automatically unlocks the door. When the door is locked with the manual door lock SW of driver's door or door key SW of driver's door, the door locks once but right after that, the door unlocks automatically.

: Parts Location

Code		See Page	Code	See Page	Code	See Page
B5	A	48	D13	52	J26	53
B7	C	48	D14	52	J27	53
B15		52	D15	52	J30	53
D1		49	J6	50	J32	53
D7		52	J22	50	K2	50
D11		52	J24	50	L3	53
D12		52	J25	50	P17	54

: Relay Blocks

Code	See Page	Relay Blocks (Relay Block Location)
3	22	Engine Room R/B (Engine Compartment Left)

: Junction Block and Wire Harness Connector

Code	See Page	Junction Block and Wire Harness (Connector Location)
1A	30	Engine Room Main Wire and Driver Side J/B (Lower Finish Panel)
1D	30	Floor Wire and Driver Side J/B (Lower Finish Panel)
1E	30	Instrument Panel Wire and Driver Side J/B (Lower Finish Panel)
1H		
1L	31	
4F	38	Instrument Panel Wire and Center Connector No.1 (Behind the Combination Meter)
4H		
4J		
4K		
5G	42	Instrument Panel Wire and Center Connector No.2 (Instrument Panel Brace RH)
5H		
5L		
5M		

cardiagn.com

: **Connector Joining Wire Harness and Wire Harness**

Code	See Page	Joining Wire Harness and Wire Harness (Connector Location)
ID3	58	Instrument Panel Wire and Floor Wire (Left Kick Panel)
ID4		
IE1	58	Front Door LH Wire and Instrument Panel Wire (Left Kick Panel)
IE2		
IE3		
IL1	59	Front Door RH Wire and Instrument Panel Wire (Right Kick Panel)
IL2		
IM1	59	Instrument Panel Wire and Floor No.2 Wire (Right Kick Panel)
IM2		
BB1	60	Rear Door No.2 Wire and Floor Wire (Left Center Pillar)
BJ1	61	Rear Door No.1 Wire and Floor No.2 Wire (Right Center Pillar)

: **Ground Points**

Code	See Page	Ground Points Location
IH	58	Cowl Side Panel LH
BL	60	Rear Side of Left Quarter Panel
BQ	60	Rear Side of Right Quarter Panel

cardiagn.com

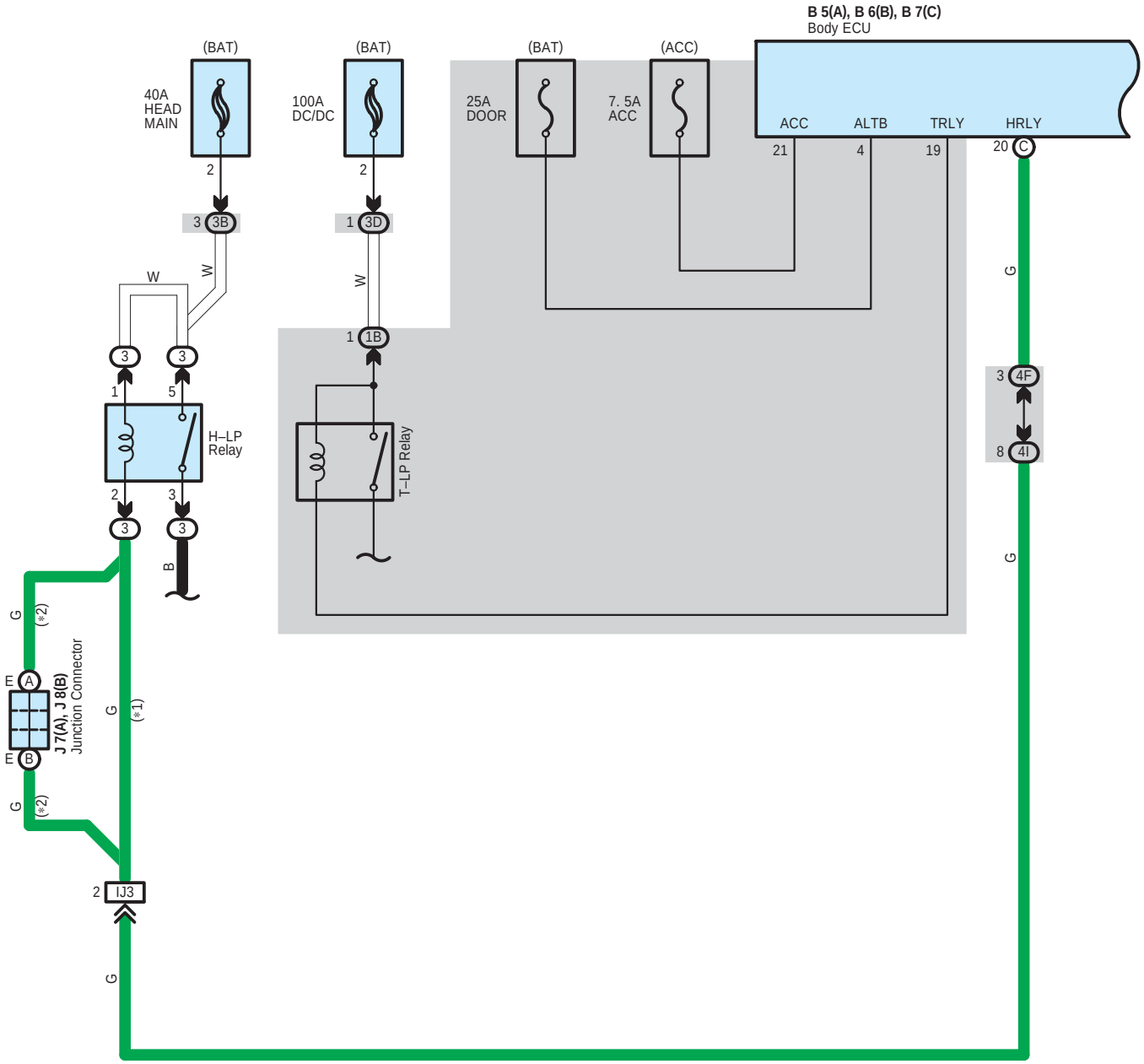

* 1 : w/ Daytime Running Light
* 2 : w/o Daytime Running Light

cardiagn.com

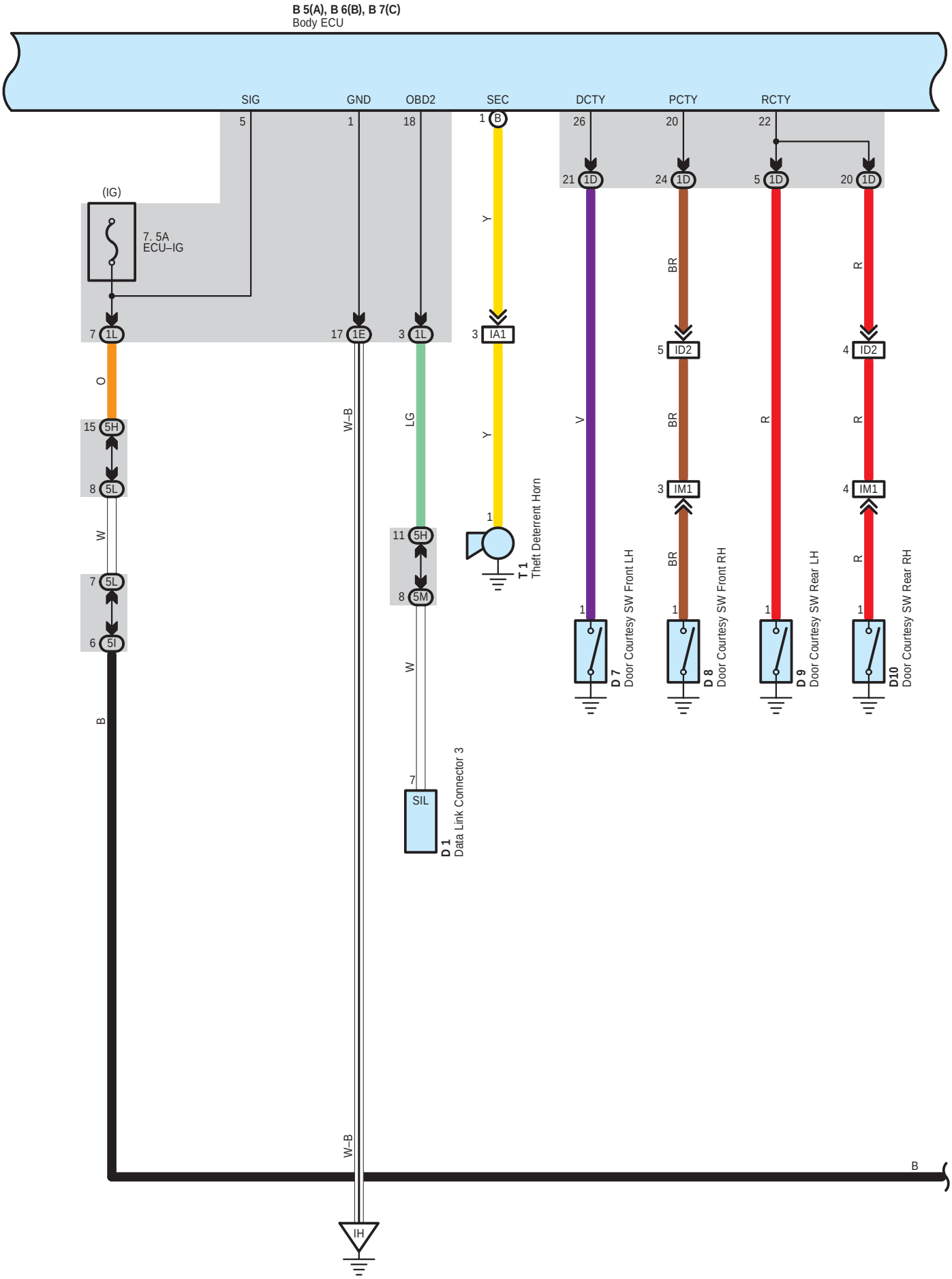

cardiagn.com

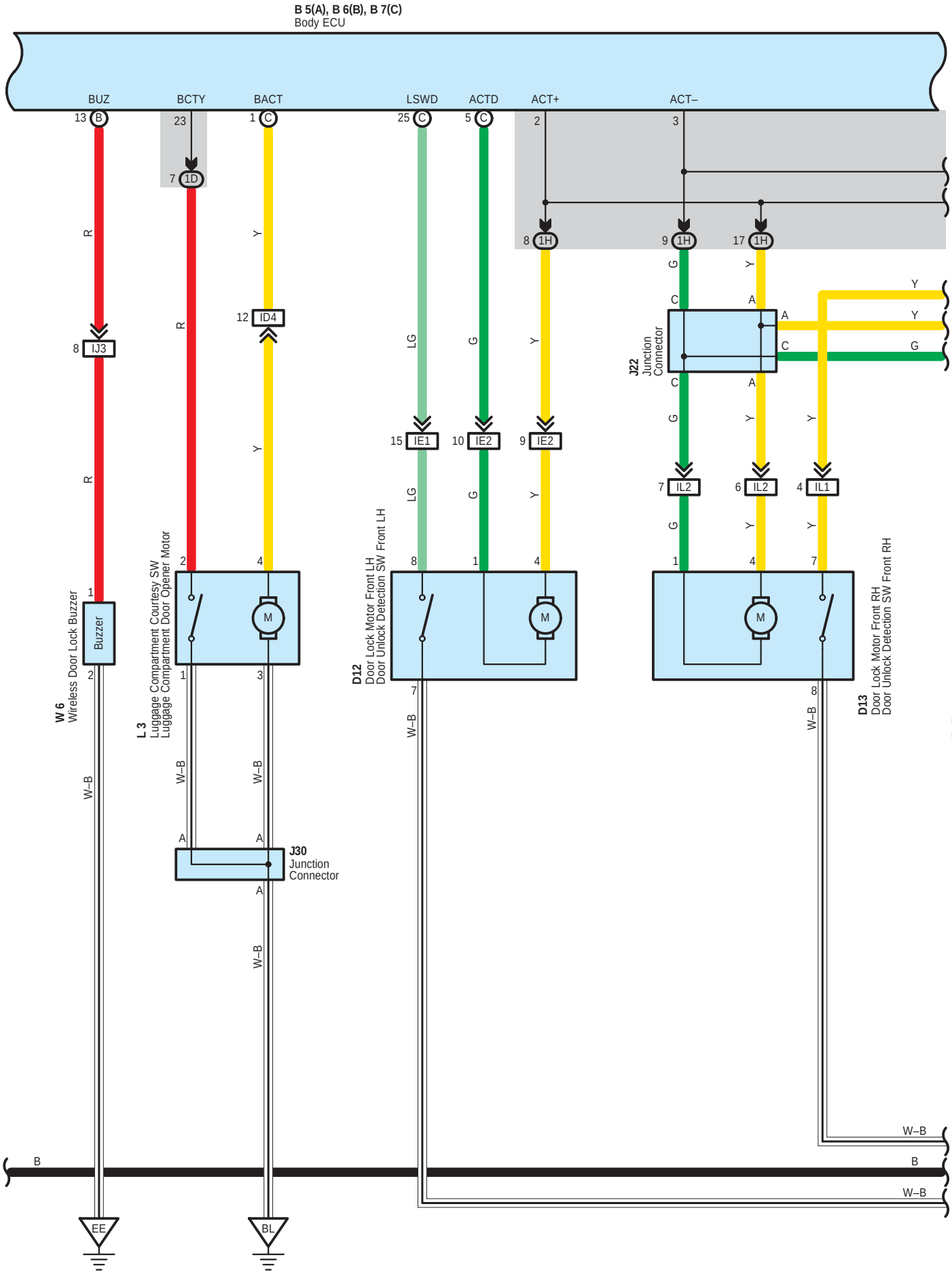

cardiagn.com

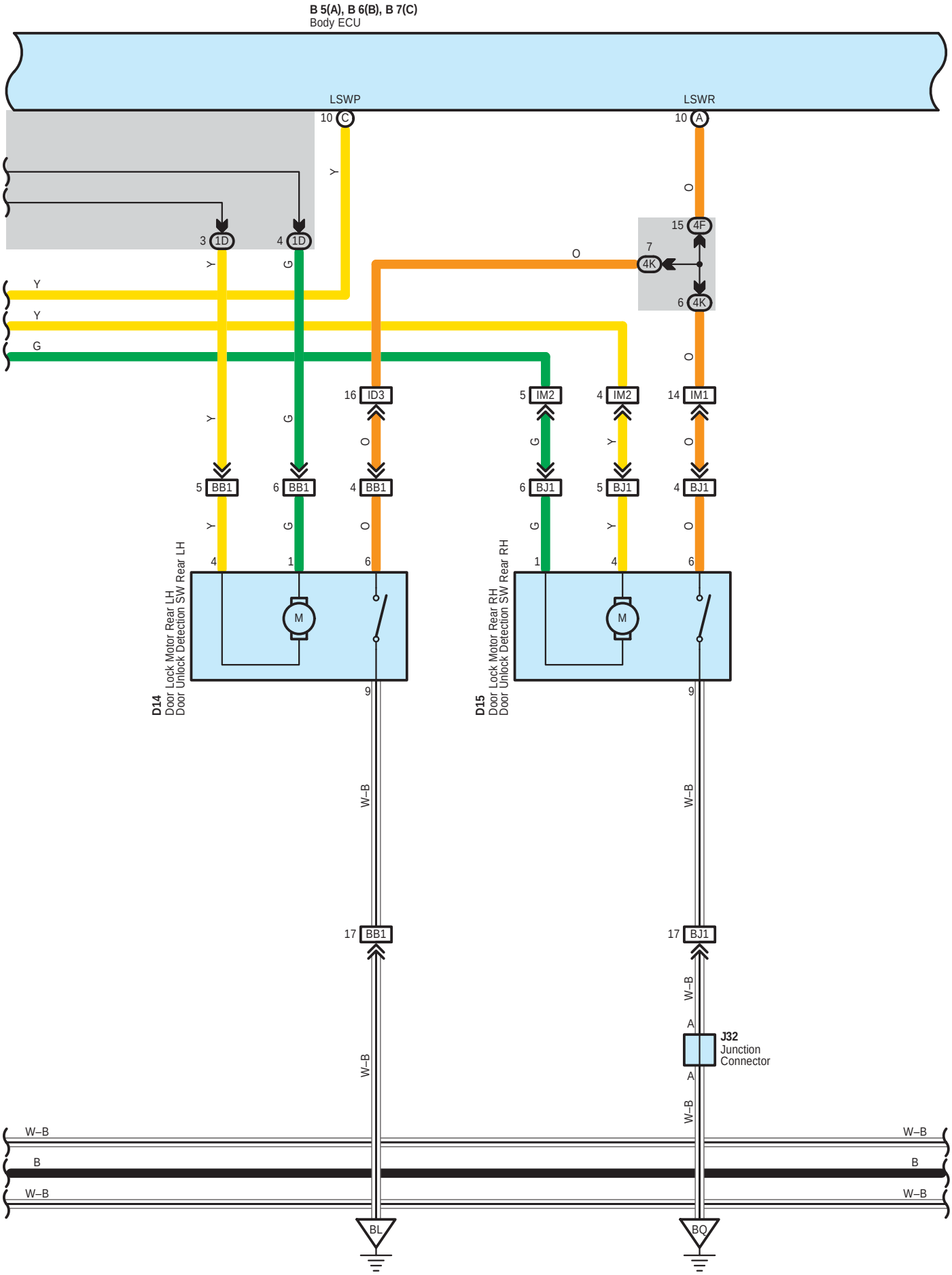

cardiagn.com

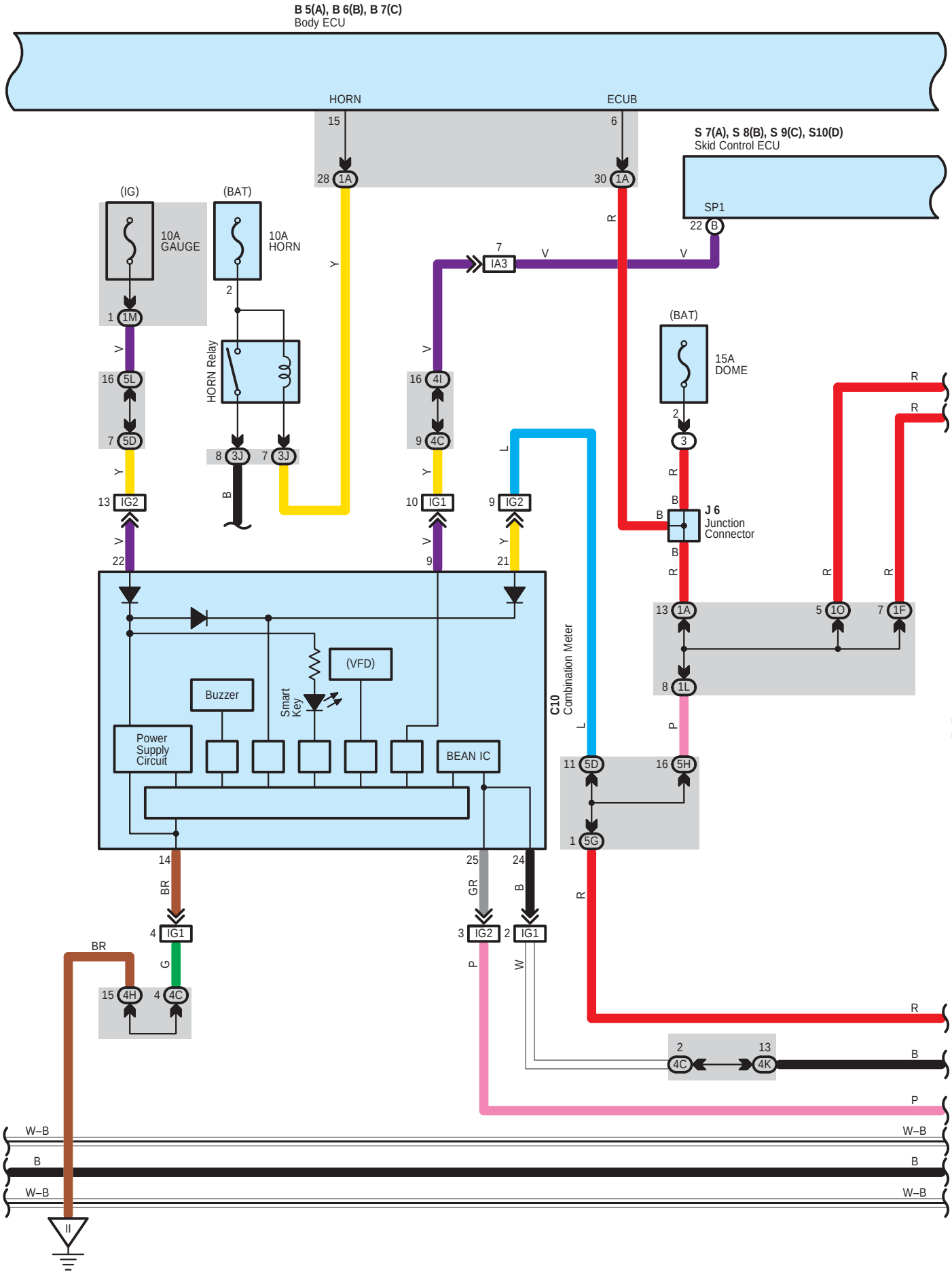

cardiagn.com

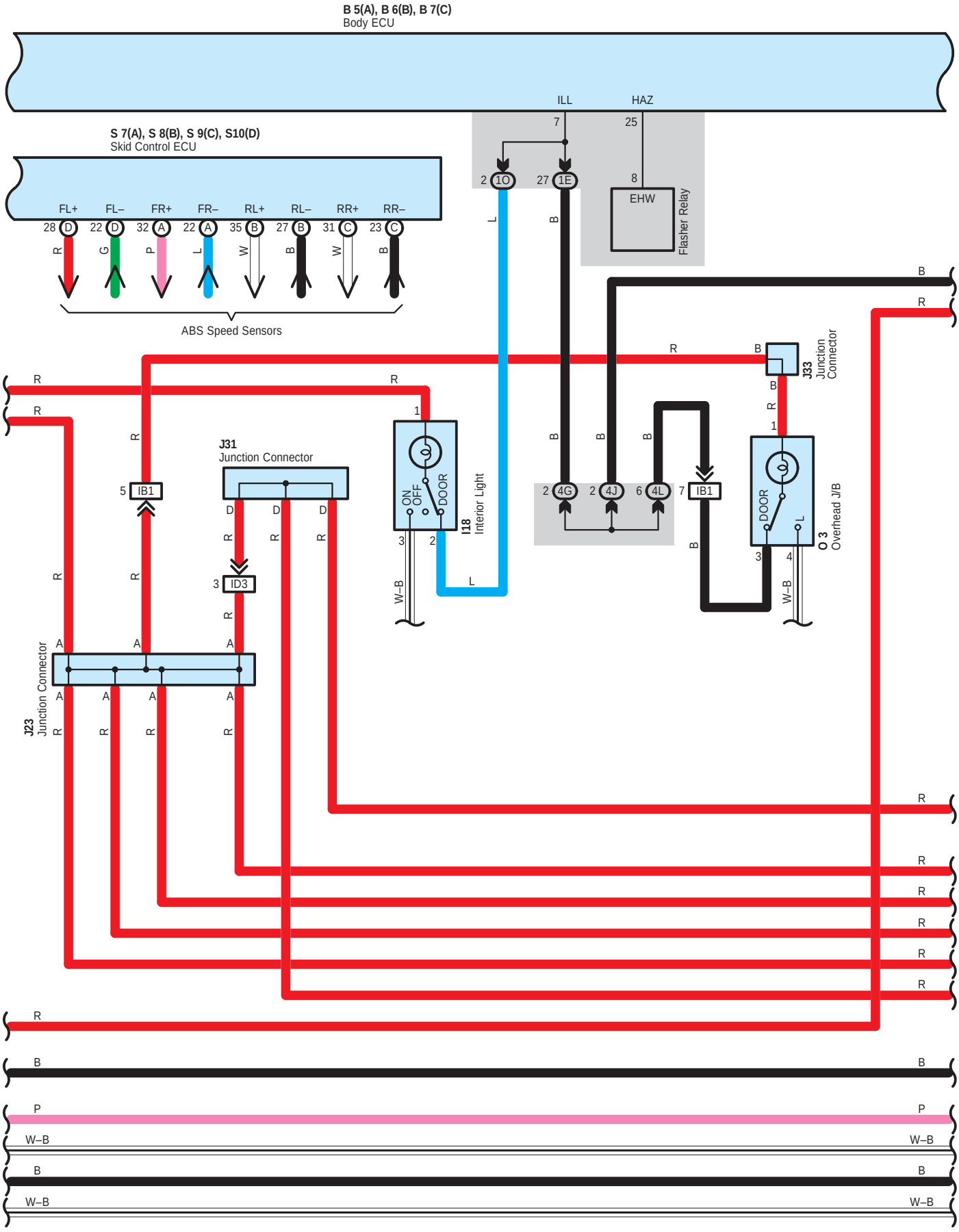

cardiagn.com

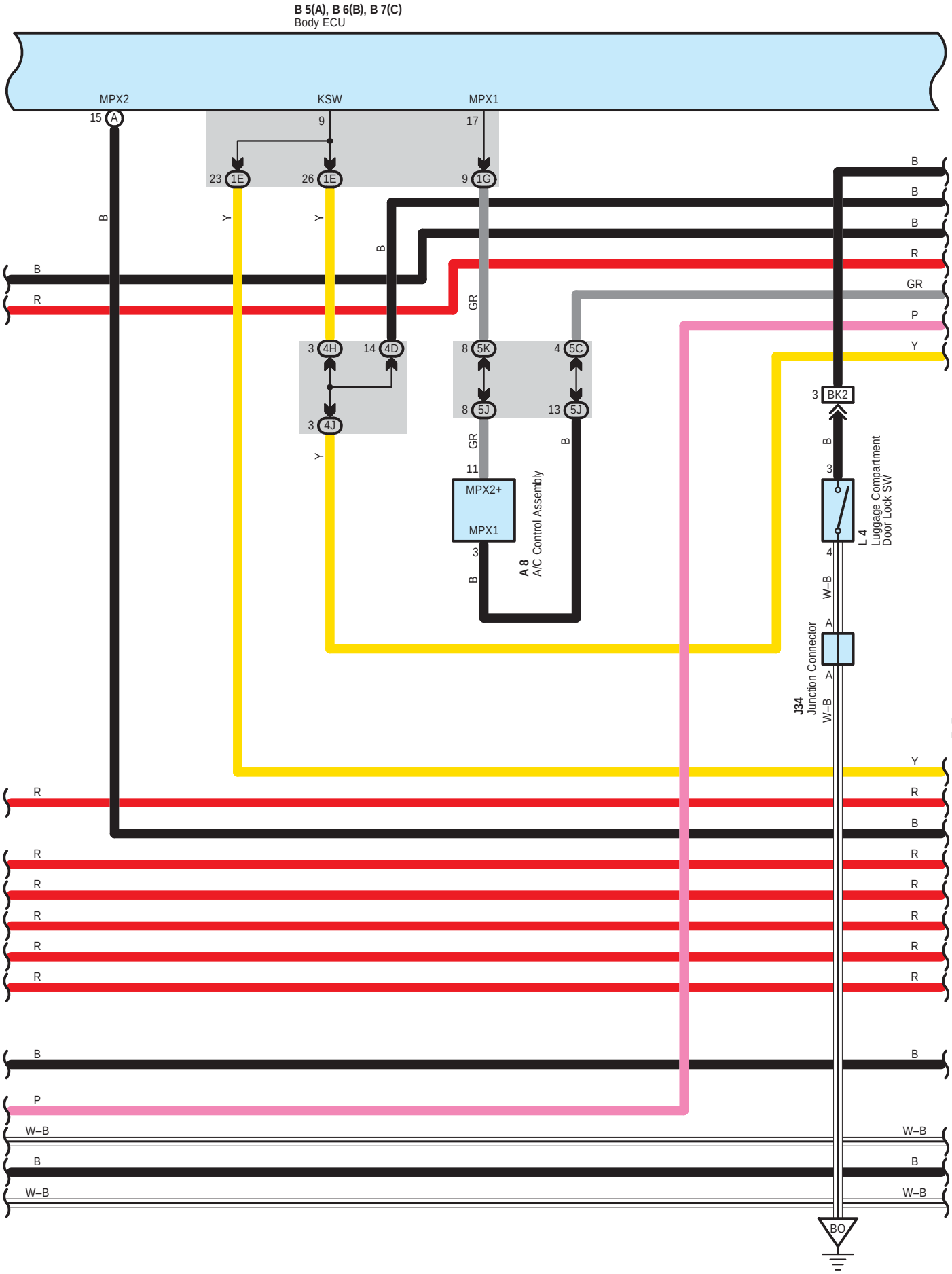

cardiagn.com

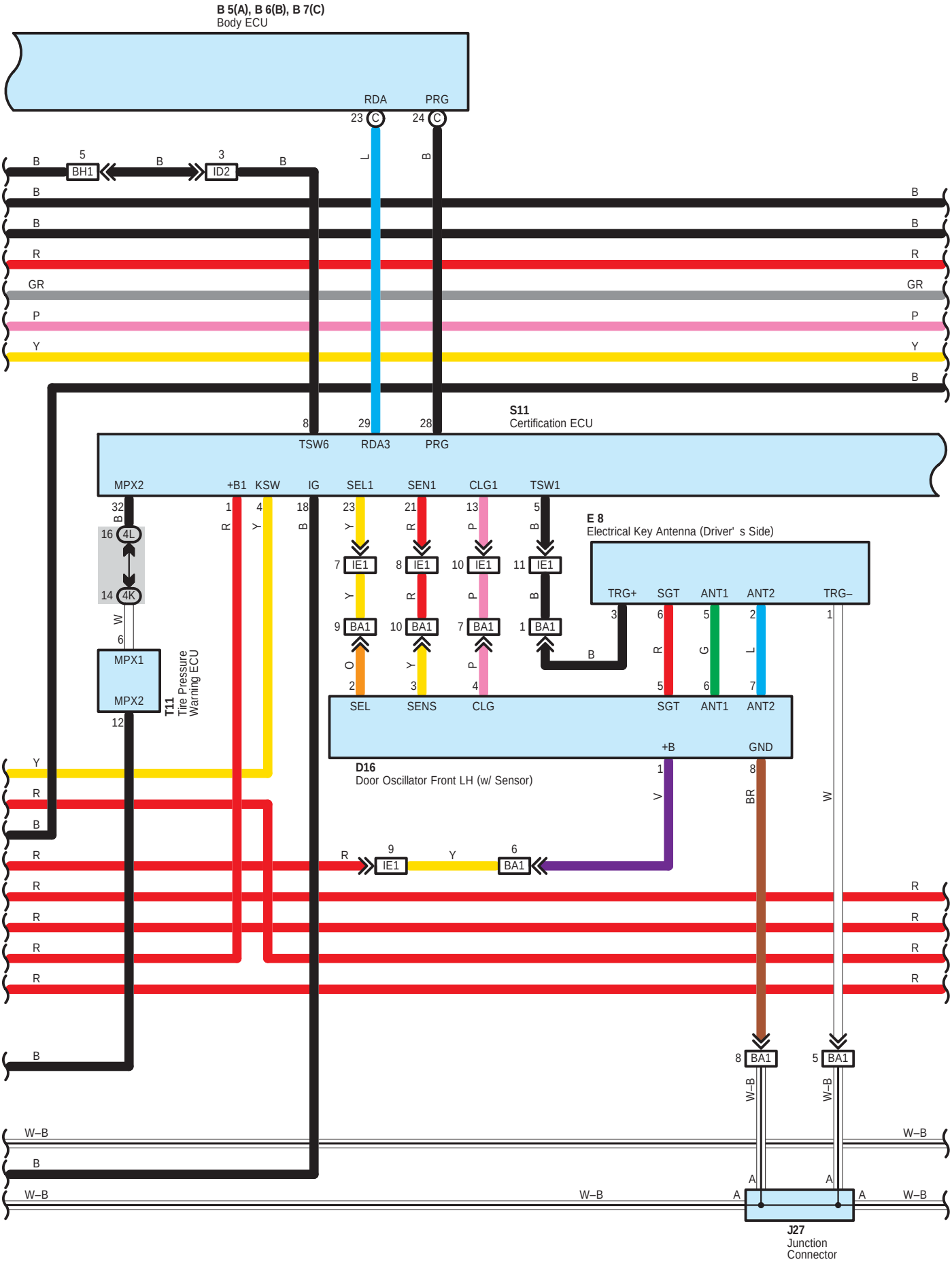

cardiagn.com

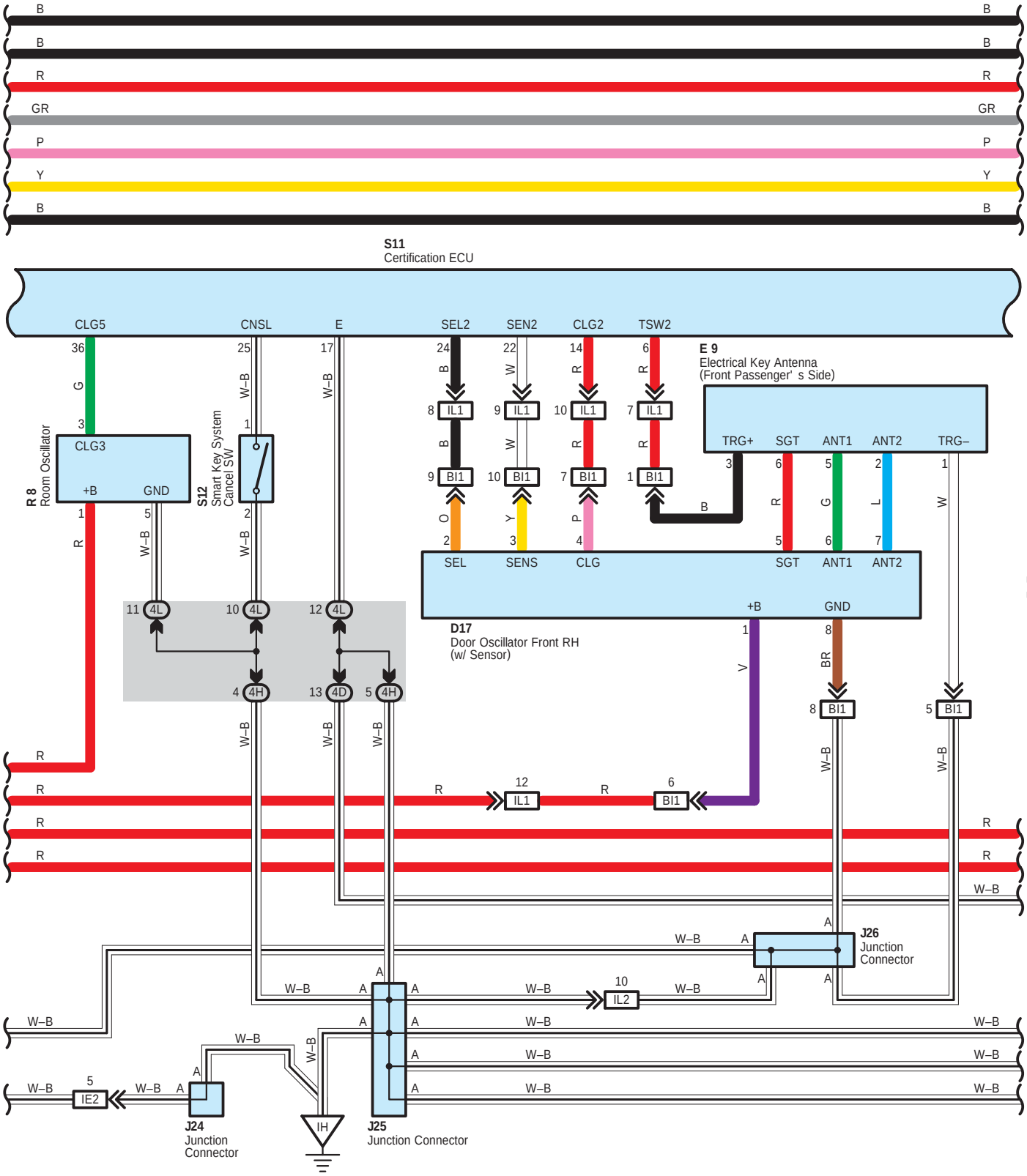

cardiagn.com

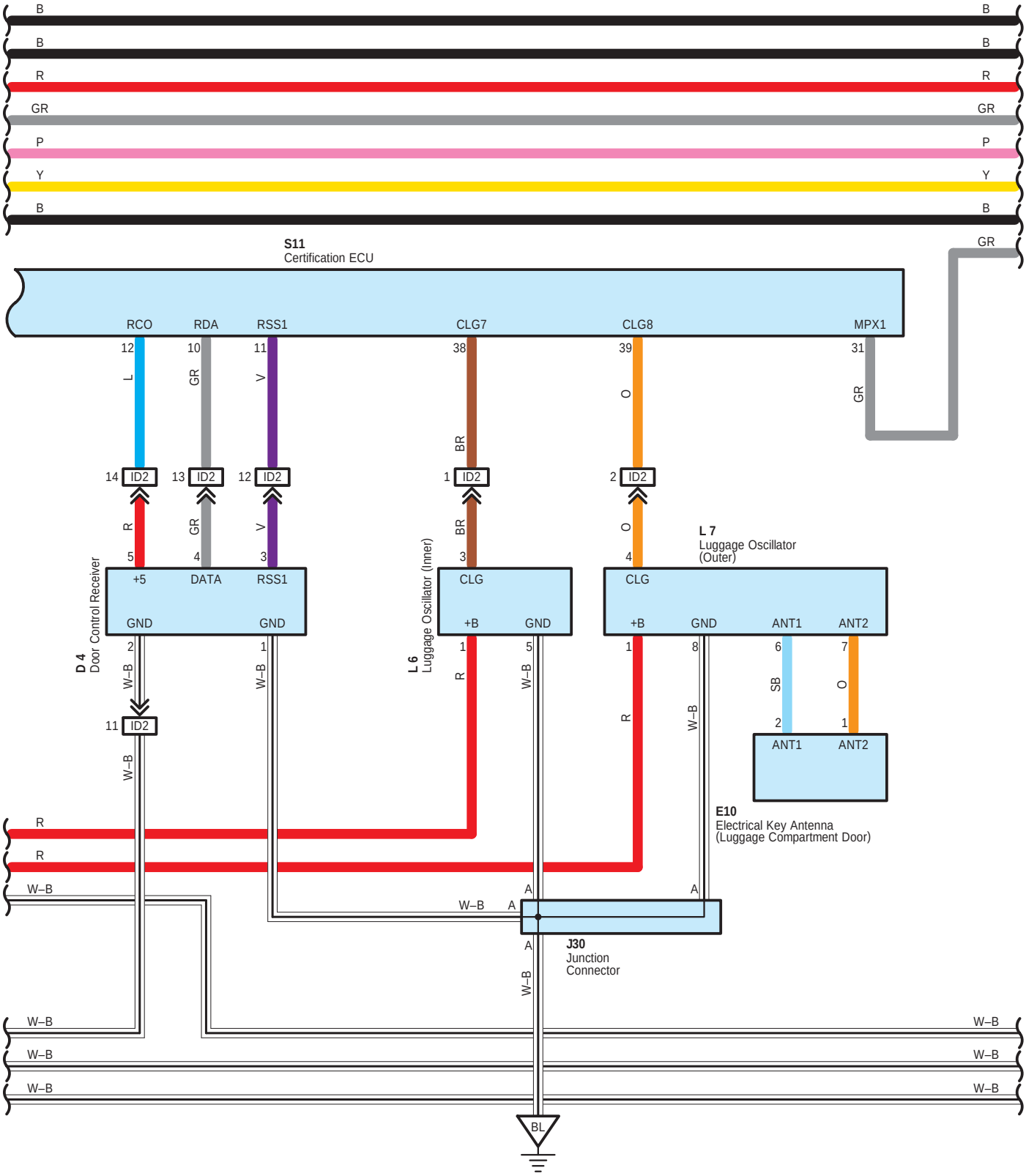

cardiagn.com

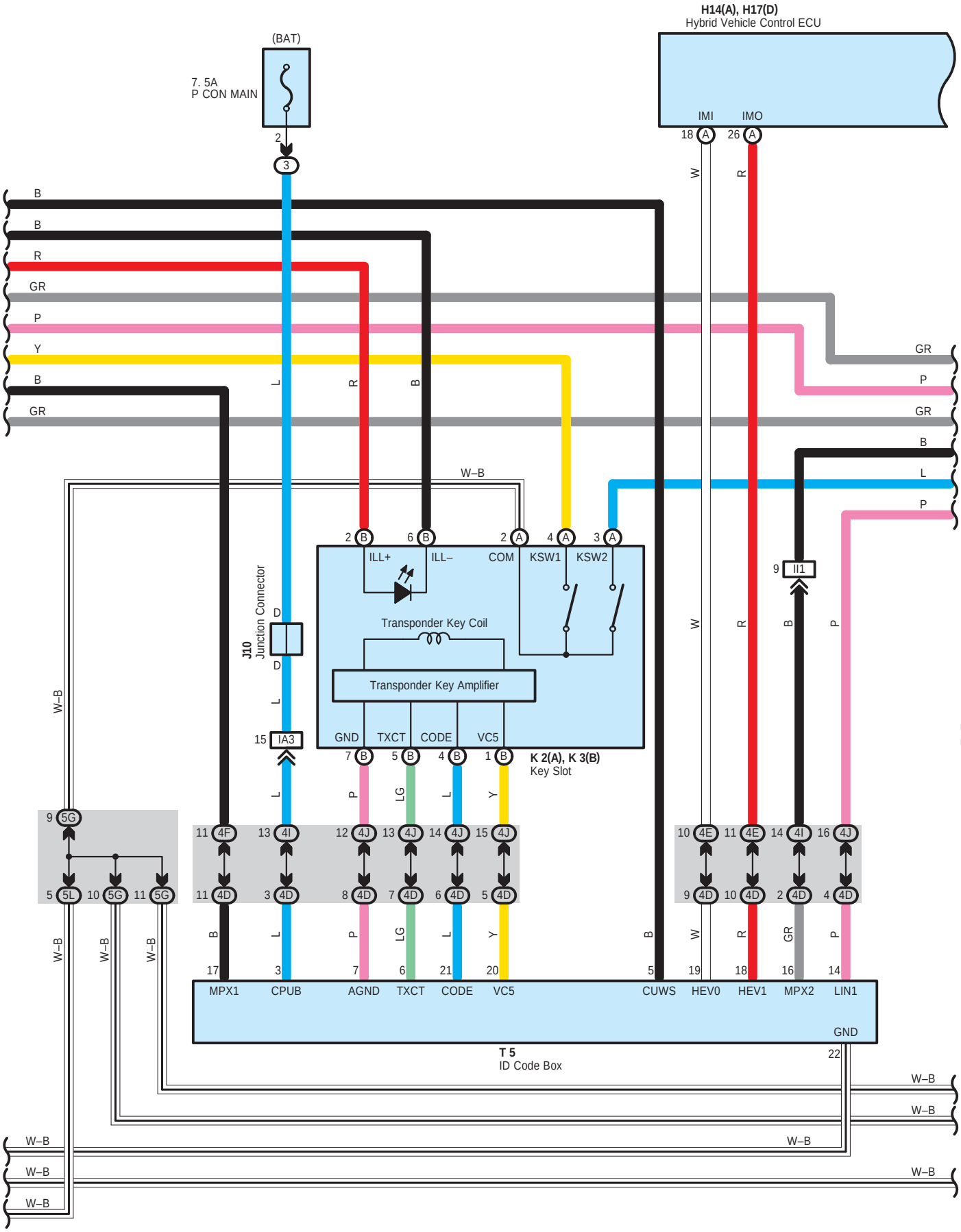

cardiagn.com

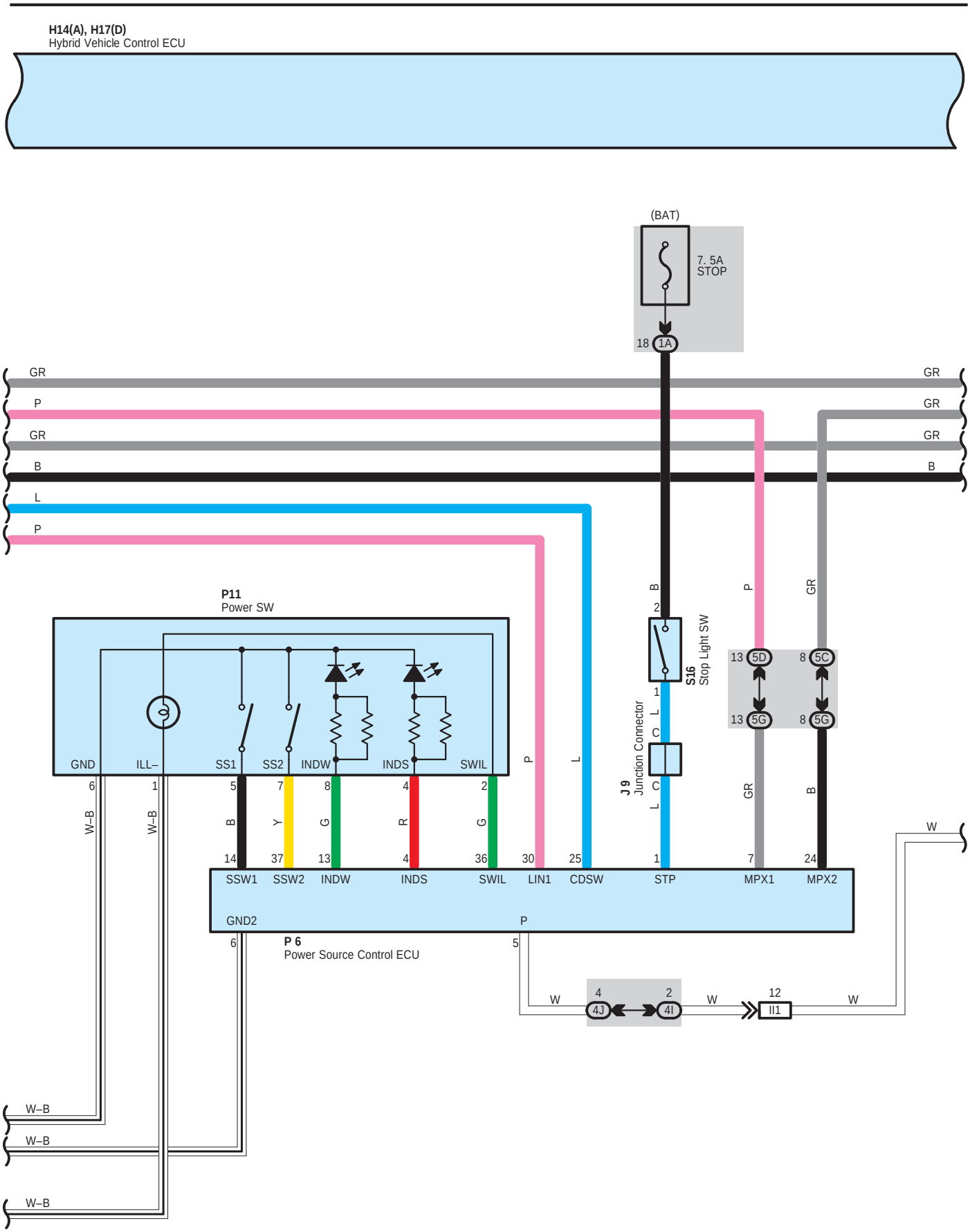

cardiagn.com

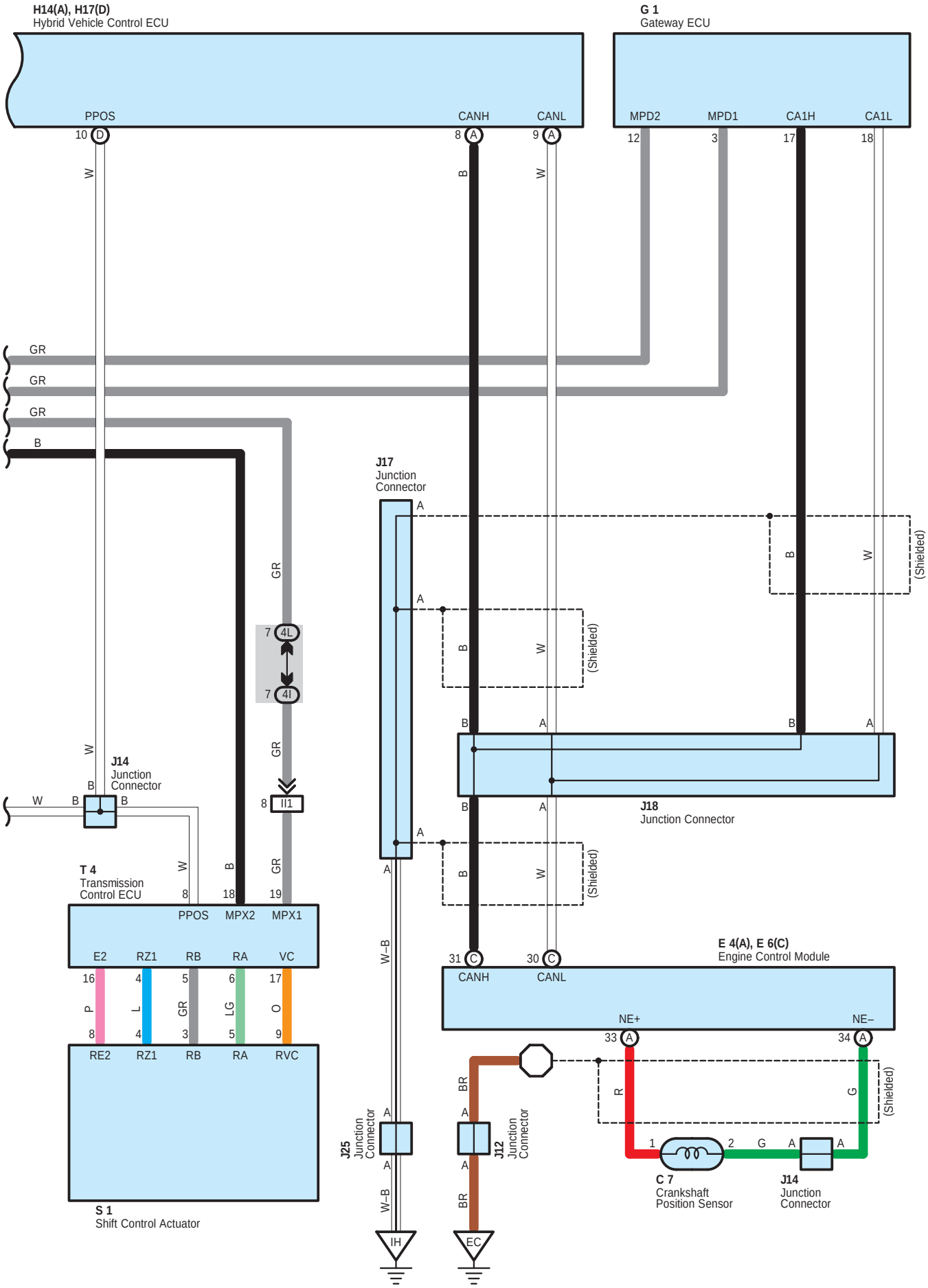

cardiagn.com

System Outline

Smart key system is a system to enable, without operating the key, to lock/unlock doors, to unlatch luggage compartment door, to start engine (Motor). It owes interactive communication function of electrical key, which makes the vehicle to recognize where the key is. All that driver has to do is to have the key with him or her. If the electrical key runs out of dry battery, the key operates as normal key without the smart key system.

1. Smart Door Unlock Function

When all the doors are locked, oscillator of each door sends signal regularly and forms detecting area outside of passenger room around 0.7 to 1m from each door handle. After forming the area, driver goes in the area with the electrical key, the key sends ID code signal. Certification ECU receives the signal through electrical key antenna and identifies ID code. After identifying ID code, doors in the area get into unlock stand–by condition. At this time, sensors installed in door handles activate. Touching back of door handles unlocks the door locks, lights up hazard lamp and sounds wireless door lock buzzer. If any door is not opened within 30 seconds after unlocking the door lock, the doors lock again.

2. Smart Door Lock Function

If driver gets off the vehicle with the electrical key and pushes lock SW of door handles when all doors are locked, certification ECU sends signal to inside and outside of passenger room to identify the electrical key. In case identification with inside of the passenger room is NG and that with outside of it is OK, doors lock. Door ajar alarm sounds to tell a door is not shut properly when lock SW of door handle is pushed with any door opened.

3. Smart Luggage Compartment Door Unlatch Function

If the driver stands in front of luggage compartment door with the electrical key and pushes unlock SW of luggage compartment door, ID code of the electrical key is identified with certification ECU through luggage oscillator (Outer). After the ID code is identified, luggage compartment door is unlocked. To keep pushing luggage compartment door opener SW unlatches luggage compartment door.

4. Smart Ignition (READY) Function

When the driver pushes the power SW with the electrical key with him or her, ID code of the electrical key is identified with certification ECU by room oscillator in passenger room. After the ID code is identified, hybrid vehicle immobiliser is released and electric power is set at ACC ON to enable to start engine. Then pushing the power SW sets power supply at IG ON and another pushing sets it at OFF. Condition circulates from ACC ON to/from IG ON to/from OFF and to ACC ON. The vehicle gets READY to drive when the driver pushes power SW with applying brake pedal at any power supply condition.

5. Smart Alarm Function

* If any door is opened and then shut with shift at P position and the power SW at other than OFF position, certification ECU identifies ID code with inside of passenger room twice. In case the identification result is NG, buzzer in combination meter alarms (Once) and wireless door lock buzzer alarms (Three times), and smart warning light in combination meter lights up. If power supply is pushed OFF with power SW or identification of the electrical key with inside of passenger room is confirmed at the second time, the warning stops.
* If all the doors are closed with shift at P position and power SW at other than OFF position, pushing lock SW of door handle starts certification ECU to identify ID code with inside and outside of passenger room. In case result of identification with inside is NG and that with outside is confirmed, wireless door lock buzzer alarms (For two seconds) and doors do not lock.
* If driver's side door is opened and then shut with shift at other than P position and power SW at other than OFF position, certification ECU identifies ID code with inside of passenger room twice. In case the identification result is NG, buzzer in combination meter and wireless door lock buzzer alarm continuously as well as smart warning light in combination meter lights up. Then, if shift is put into P position or the identification with inside is confirmed at the second time, the continuos alarming stops. If the driver turns electric power OFF with power SW or the identification with inside is confirmed at the second time, smart warning light goes off.
* If other doors than driver's side door is opened and then shut with shift at other than P position and power SW at other than OFF position, certification ECU identifies ID code with inside of passenger room twice. In case the identification result is NG, buzzer in combination meter alarms (Once) and wireless door lock buzzer alarms (Three times), and smart warning light in combination meter lights up. If power supply is pushed OFF with power SW or identification with inside of passenger room is confirmed at the second time, the warning stops.
* If lock SW of door handle is pushed with all the doors shut and power SW at OFF position, certification ECU identifies ID code with inside of passenger room twice. In case the identification is confirmed then, wireless door lock buzzer alarms (For two seconds) but doors do not lock.
* If power supply is turned OFF with power SW after "READY to drive" condition are kept for about 20 minutes, certification ECU identifies ID code of the electrical key with inside of passenger room. In case the ECU recognizes code of battery voltage decrease, buzzer in combination meter alarms once.
* If power SW is pushed ON, certification ECU identifies ID code with inside of passenger room twice. In case the identification result is NG, buzzer in combination meter alarms once and smart warning light lights up for about five seconds. Then, driver's operation of power SW is cancelled.

cardiagn.com

6. Smart Door Unlock Mode Change Function

If lock button and PANIC button of electrical key are pushed simultaneously for about five seconds with power SW at off position and electrical key not in key holder, smart door unlock mode changes to all door unlock mode or to each door unlock mode (At front passenger door, it changes only to all door unlock condition). The unlock modes circulate. Wireless door lock buzzer and buzzer in combination meter sound to inform mode change.

7. Power Saving Function for Battery

In case the electrical key does not send signal for five days or longer, interval between identification time is extended from about 300 ms to 600 ms.

In case the electrical key does not send signal for 14 days or longer, or the key is in detected area outside of vehicle for ten minutes or longer, smart function stops its operation. Smart function resumes under following conditions.

* When lock and unlock signal of wireless function of the key is input and its ID code is identified.
* When doors are locked with lock SW ON.
* When doors are locked or unlocked with door key SW operation.

8. Manual Operation Function

Electrical key has lock, unlock, and PANIC buttons. It can operate wireless door locking manually. Its operation is the same as one without smart key system.

9. Smart Illumination Function

When driver goes in detected area outside of passenger room with electrical key with him or her and its ID code is identified, interior light, overhead J/B and key slot light up for about 15 seconds by timer.

10. Smart Entry System Cancelled

Smart key system is cancelled under following conditions.

* When smart key system cancel SW is turned on.
* When electrical key is inserted in key slot.
* When battery of electrical key is dead.

○ : **Parts Location**

Code		See Page	Code		See Page	Code		See Page
A8		48	H14	A	49	K3	B	50
B5	A	48	H17	D	49	L3		53
B6	B	48	I18		53	L4		53
B7	C	48	J6		50	L6		53
C7		46	J7	A	50	L7		53
C10		49	J8	B	50	O3		54
D1		49	J9		50	P6		51
D4		52	J10		50	P11		51
D7		52	J12		50	R8		51
D8		52	J14		50	S1		47
D9		52	J17		50	S7	A	51
D10		52	J18		50	S8	B	51
D12		52	J22		50	S9	C	51
D13		52	J23		50	S10	D	51
D14		52	J24		50	S11		51
D15		52	J25		50	S12		51
D16		52	J26		53	S16		51
D17		52	J27		53	T1		47
E4	A	49	J30		53	T4		51
E6	C	49	J31		53	T5		51
E8		53	J32		53	T11		51
E9		53	J33		53	W6		47
E10		53	J34		53			
G1		49	K2	A	50			

cardiagn.com

: **Relay Blocks**

Code	See Page	Relay Blocks (Relay Block Location)
3	22	Engine Room R/B (Engine Compartment Left)

: **Junction Block and Wire Harness Connector**

Code	See Page	Junction Block and Wire Harness (Connector Location)
1A	30	Engine Room Main Wire and Driver Side J/B (Lower Finish Panel)
1B		
1D	30	Floor Wire and Driver Side J/B (Lower Finish Panel)
1E	30	Instrument Panel Wire and Driver Side J/B (Lower Finish Panel)
1F		
1G		
1H		
1L	31	
1M		
1O	30	Roof Wire and Driver Side J/B (Lower Finish Panel)
3B	23	Engine Room Main Wire and Engine Room J/B (Engine Compartment Left)
3D		
3J	24	
4C	38	Instrument Panel Wire and Center Connector No.1 (Behind the Combination Meter)
4D		
4E		
4F		
4G		
4H		
4I		
4J		
4K		
4L		
5C	42	Instrument Panel Wire and Center Connector No.2 (Instrument Panel Brace RH)
5D		
5G		
5H		
5I		
5J		
5K		
5L		
5M		

cardiagn.com

: Connector Joining Wire Harness and Wire Harness

Code	See Page	Joining Wire Harness and Wire Harness (Connector Location)
IA1	58	Engine Room Main Wire and Instrument Panel Wire (Upper Parts of Front Body Pillar LH)
IA3		
IB1	58	Roof Wire and Instrument Panel Wire (Upper Parts of Front Body Pillar LH)
ID2	58	Instrument Panel Wire and Floor Wire (Left Kick Panel)
ID3		
ID4		
IE1	58	Front Door LH Wire and Instrument Panel Wire (Left Kick Panel)
IE2		
IG1	59	Instrument Panel Wire and Instrument Panel No.2 Wire (Behind the Combination Meter)
IG2		
II1	59	Engine Wire and Instrument Panel Wire (Behind the Glove Box)
IJ3	59	Engine Room Main Wire and Instrument Panel Wire (Behind the Glove Box)
IL1	59	Front Door RH Wire and Instrument Panel Wire (Right Kick Panel)
IL2		
IM1	59	Instrument Panel Wire and Floor No.2 Wire (Right Kick Panel)
BA1	60	Front Door LH Wire and Electrical Key LH Wire (Near the Front Door Outside Handle LH)
BB1	60	Rear Door No.2 Wire and Floor Wire (Left Center Pillar)
BH1	61	Back Door No.1 Wire and Floor Wire (Rear Side of Roof Panel)
BI1	61	Front Door RH Wire and Electrical Key RH Wire (Near the Front Door Outside Handle RH)
BJ1	61	Rear Door No.1 Wire and Floor No.2 Wire (Right Center Pillar)
BK2	61	Back Door No.1 Wire and Back Door No.2 Wire (Rear Side of Roof Panel)

: Ground Points

Code	See Page	Ground Points Location
EC	56	Engine Block
EE	56	Left Side of the Suspension Tower
IH	58	Cowl Side Panel LH
II	58	Instrument Panel Brace LH
BL	60	Rear Side of Left Quarter Panel
BO	60	Center of the Back Door Panel
BQ	60	Rear Side of Right Quarter Panel

cardiagn.com

cardiagn.com

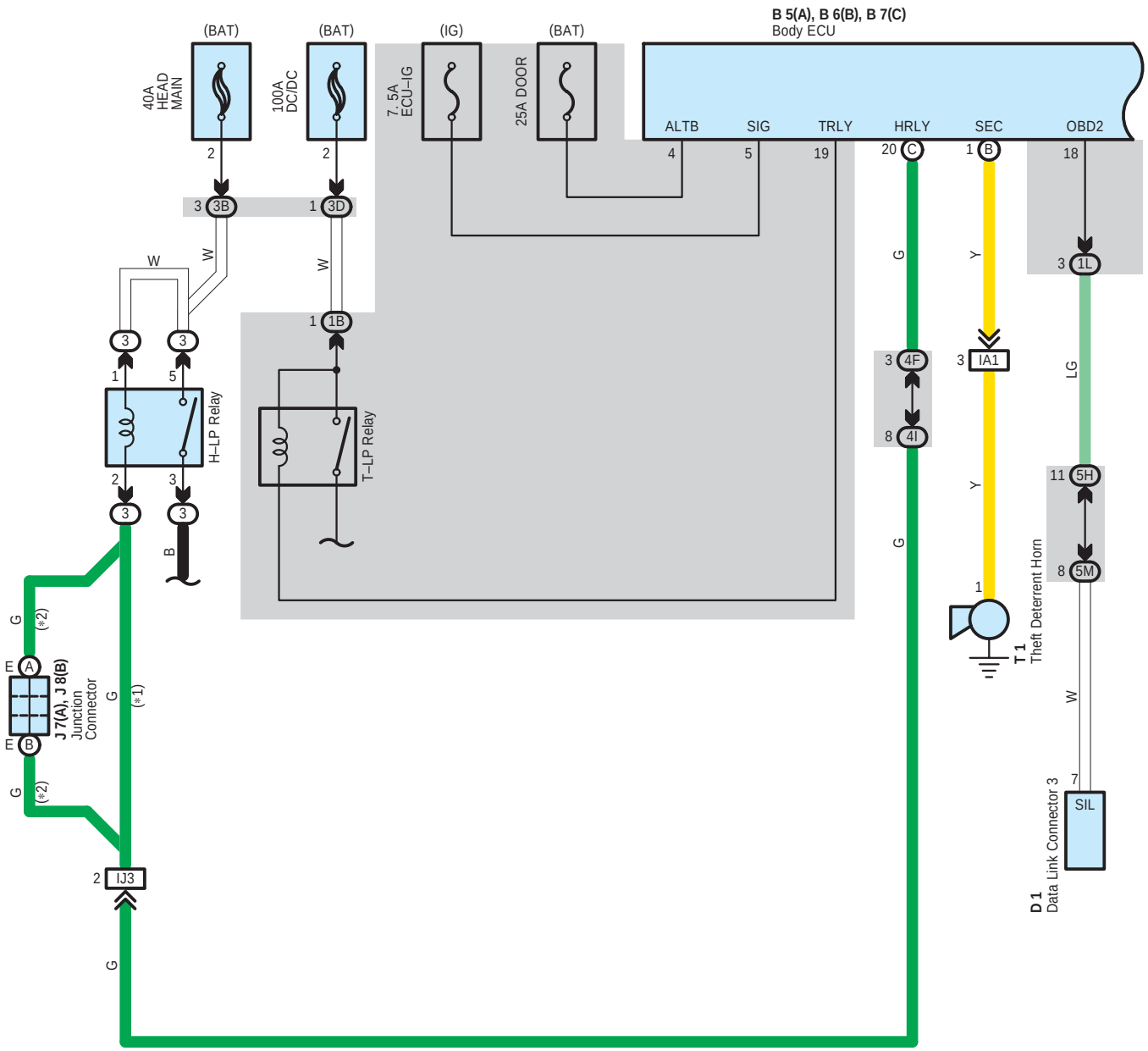

* 1 : w/ Daytime Running Light
* 2 : w/o Daytime Running Light

cardiagn.com

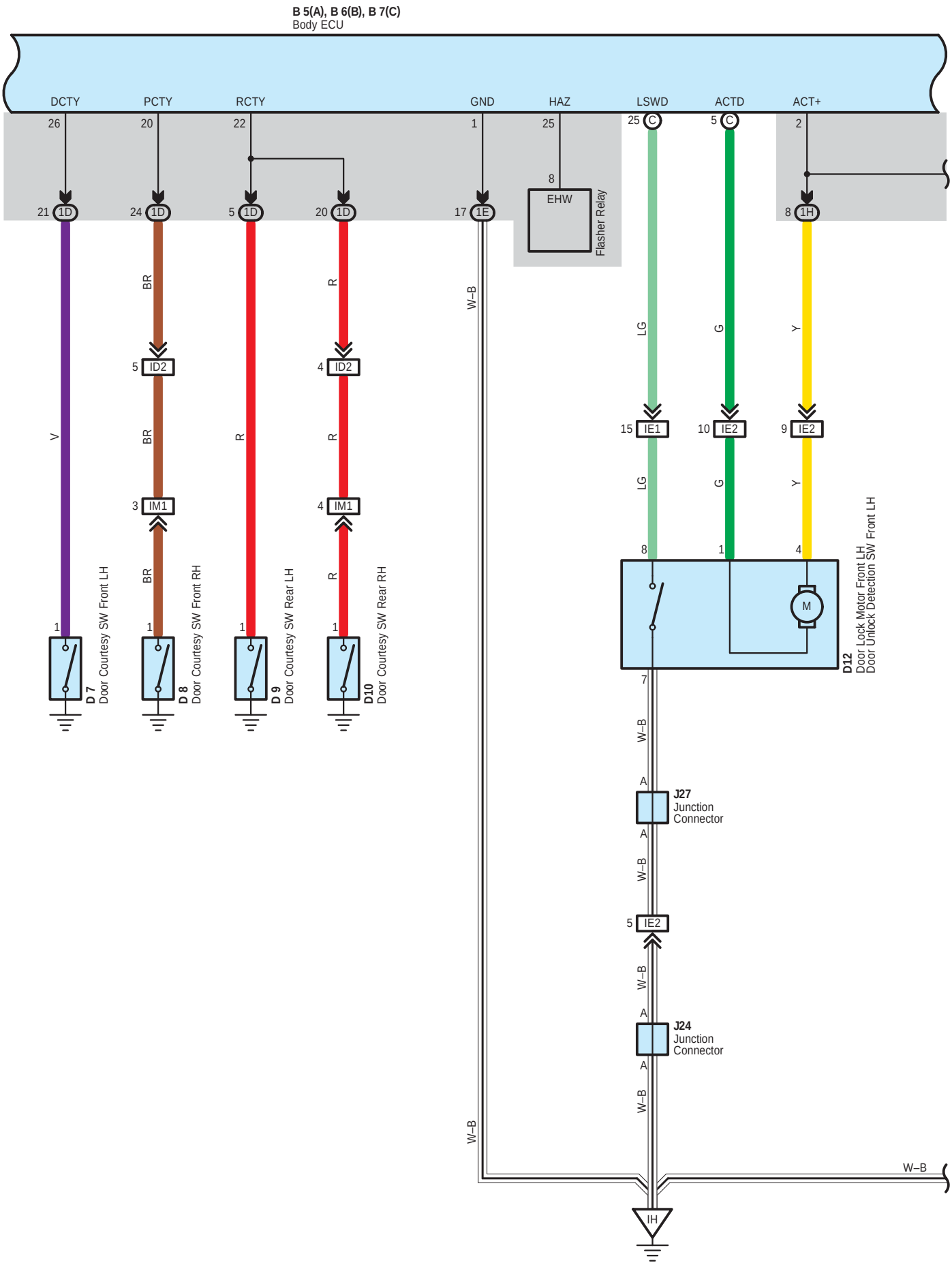

cardiagn.com

Wireless Door Lock Control without Smart Key System

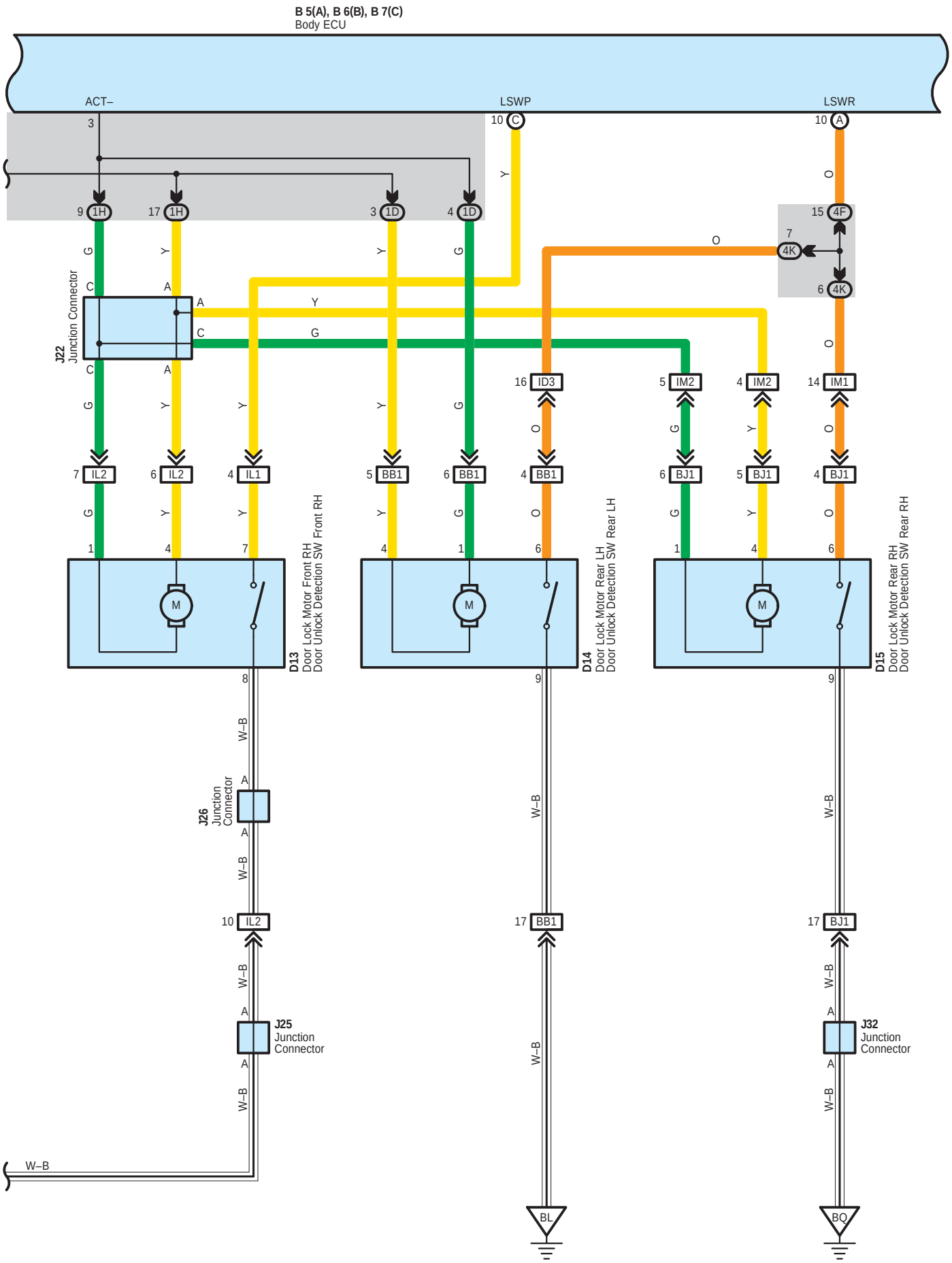

cardiagn.com

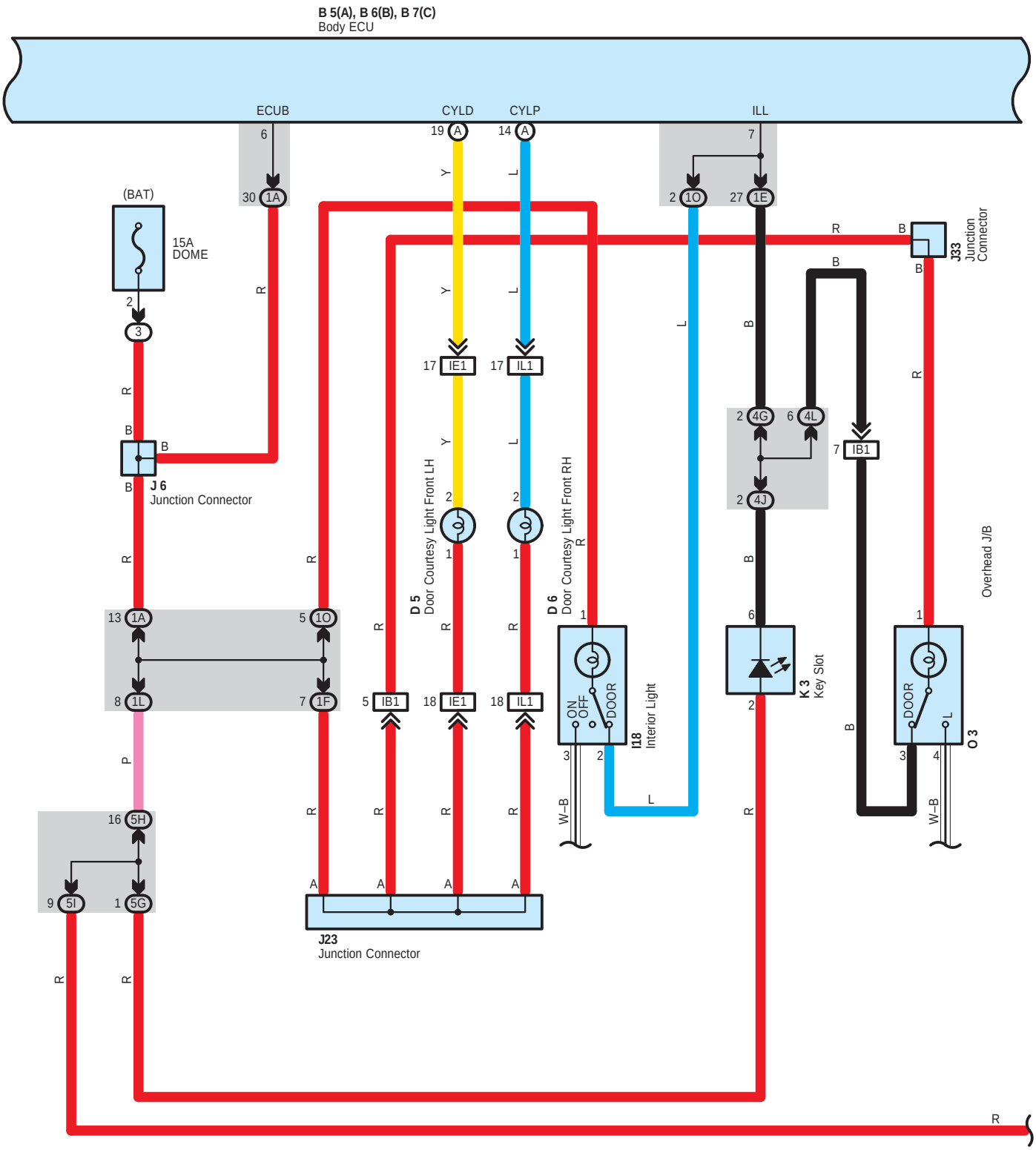

cardiagn.com

Wireless Door Lock Control without Smart Key System

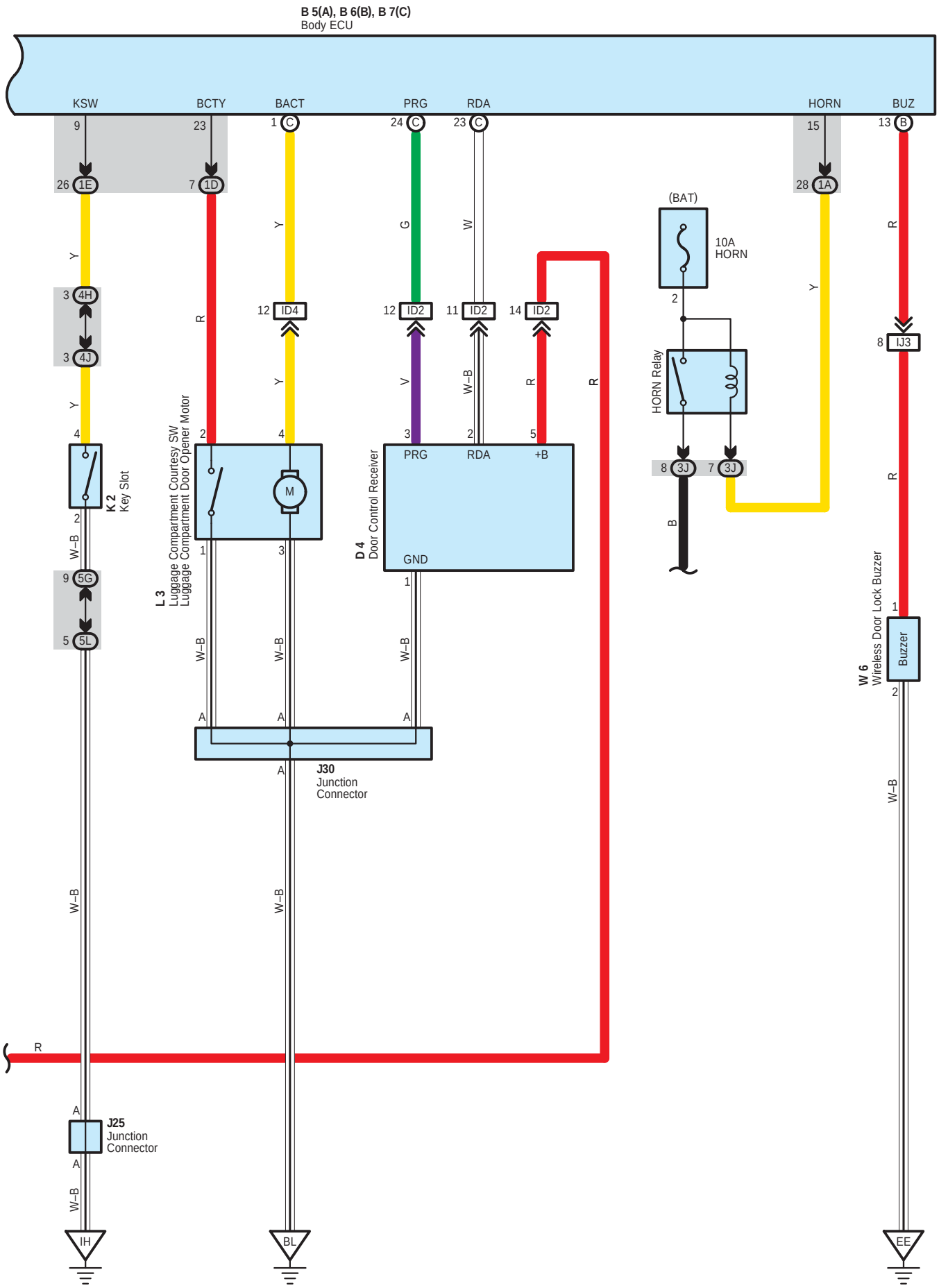

cardiagn.com

System Outline

Door lock control (Lock and unlock) and panic control (Theft alarm and flash) is performed by remote control, without the key inserted in the door key cylinder, using low–power electrical waves emitted from a transmitter.

1. Normal Operation

∗ Lock operation
When the lock SW on the transmitter is pressed, all the doors will lock.

∗ Unlock operation
When the unlock SW on the transmitter is pressed once, only the driver door will unlocks. When the unlock SW is pressed again within 3 seconds, all the doors will unlock.

2. Auto Lock Function

When the door is not actually opened within 30 seconds after the door has been unlocked by the unlock SW on the transmitter, all the doors will automatically lock. If any one of the following conditions is detected, the wireless door lock does not function.

∗ Any door is opened.
∗ The electrical key is inserted in the key slot.
∗ Power SW is on

3. Wireless Door Lock Stop Function

If any one of the following conditions is detected, the wireless door lock does not function.

Lock operation
∗ When any door is open (Door courtesy SW on)
∗ The electrical key is inserted in the key slot (Unlock warning SW on)
∗ Power SW is on

Unlock operation
∗ Power SW is on
∗ The electrical key is inserted in the key slot

4. Visual Confirmation of Lock or Unlock

During lock operation, when the body ECU receives a lock signal from the door lock detection SW, the turn signal light flashes once. During unlock operation, when the body ECU receives an unlock signal from the door lock detection SW, the turn signal light flashes twice.

5. Remote Panic Operation

Panic will function when doors are locked or unlocked, open or closed. When the panic button (Transmitter) is pushed once, interior lights light up, and theft alarm and horn sounds and turn signal lights, headlights and taillights flash. Then, any one of the button (Transmitter) is pushed once again, interior lights turn off, sounding and flashing will stop. Panic will not function when power SW is on.

6. Repeat Function

If the lock detection signal is not received in response to the output signal after the body ECU has output the lock signal, the lock signal is output again.

7. Illuminated Entry Function

When the body ECU detects the unlock state after the unlock operation has been made, it lights up the key slot, overhead J/B and interior light for approx. 15 sec. If all the doors are locked during this operation, lighting is cancelled and the lights immediately fade out.

○ **: Parts Location**

Code		See Page	Code		See Page	Code	See Page
B5	A	48	D13		52	J27	53
B6	B	48	D14		52	J30	53
B7	C	48	D15		52	J32	53
D1		49	I18		53	J33	53
D4		52	J6		50	K2	50
D5		52	J7	A	50	K3	50
D6		52	J8	B	50	L3	53
D7		52	J22		50	O3	54
D8		52	J23		50	T1	47
D9		52	J24		50	W6	47
D10		52	J25		50		
D12		52	J26		53		

cardiagn.com

: **Relay Blocks**

Code	See Page	Relay Blocks (Relay Block Location)
3	22	Engine Room R/B (Engine Compartment Left)

: **Junction Block and Wire Harness Connector**

Code	See Page	Junction Block and Wire Harness (Connector Location)
1A	30	Engine Room Main Wire and Driver Side J/B (Lower Finish Panel)
1B		
1D	30	Floor Wire and Driver Side J/B (Lower Finish Panel)
1E	30	Instrument Panel Wire and Driver Side J/B (Lower Finish Panel)
1F		
1H		
1L	31	
1O	30	Roof Wire and Driver Side J/B (Lower Finish Panel)
3B	23	Engine Room Main Wire and Engine Room J/B (Engine Compartment Left)
3D		
3J	24	
4F	38	Instrument Panel Wire and Center Connector No.1 (Behind the Combination Meter)
4G		
4H		
4I		
4J		
4K		
4L		
5G	42	Instrument Panel Wire and Center Connector No.2 (Instrument Panel Brace RH)
5H		
5I		
5L		
5M		

: **Connector Joining Wire Harness and Wire Harness**

Code	See Page	Joining Wire Harness and Wire Harness (Connector Location)
IA1	58	Engine Room Main Wire and Instrument Panel Wire (Upper Parts of Front Body Pillar LH)
IB1	58	Roof Wire and Instrument Panel Wire (Upper Parts of Front Body Pillar LH)
ID2	58	Instrument Panel Wire and Floor Wire (Left Kick Panel)
ID3		
ID4		
IE1	58	Front Door LH Wire and Instrument Panel Wire (Left Kick Panel)
IE2		
IJ3	59	Engine Room Main Wire and Instrument Panel Wire (Behind the Glove Box)
IL1	59	Front Door RH Wire and Instrument Panel Wire (Right Kick Panel)
IL2		
IM1	59	Instrument Panel Wire and Floor No.2 Wire (Right Kick Panel)
IM2		
BB1	60	Rear Door No.2 Wire and Floor Wire (Left Center Pillar)
BJ1	61	Rear Door No.1 Wire and Floor No.2 Wire (Right Center Pillar)

: **Ground Points**

Code	See Page	Ground Points Location
EE	56	Left Side of the Suspension Tower
IH	58	Cowl Side Panel LH
BL	60	Rear Side of Left Quarter Panel
BQ	60	Rear Side of Right Quarter Panel

cardiagn.com

cardiagn.com

Luggage Compartment Door Opener

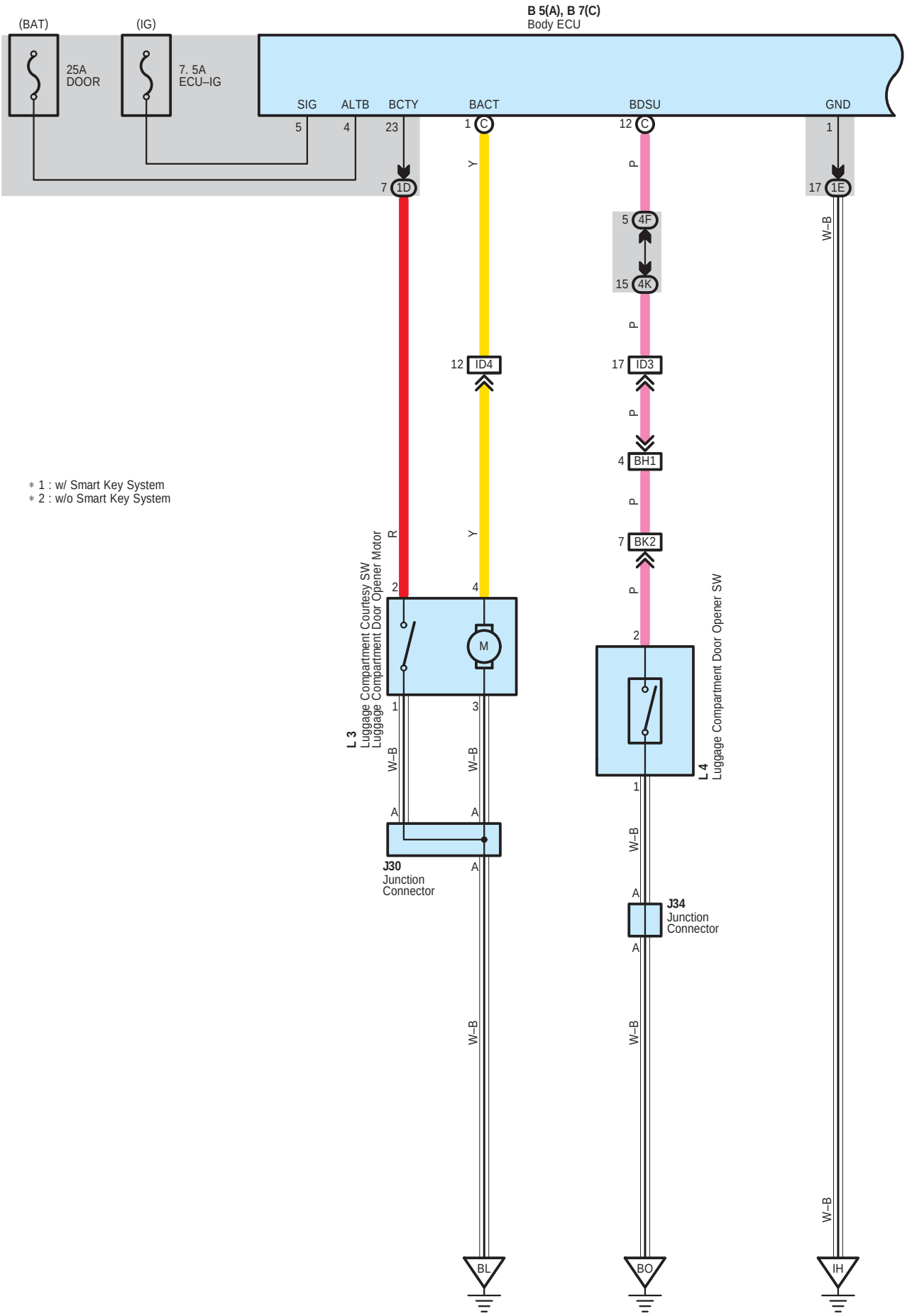

cardiagn.com

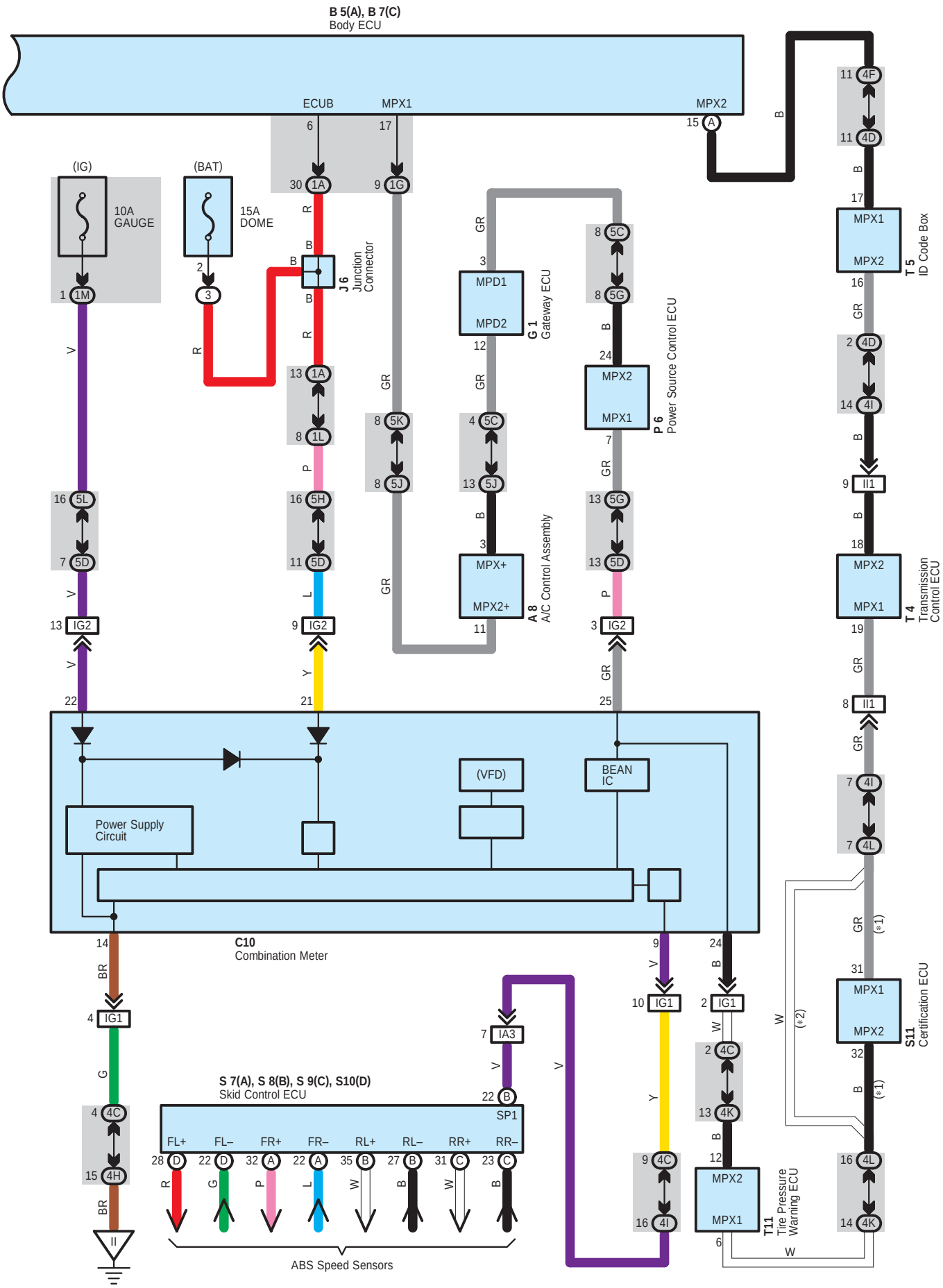

cardiagn.com

Luggage Compartment Door Opener

System Outline

If the vehicle is stationary (Slower than 5 km/h) and luggage compartment door is unlocked, the luggage compartment door opener motor activates with control of body ECU when luggage compartment door opener SW is pushed. It results in releasing latch of luggage compartment door to open luggage compartment door.

: Parts Location

Code		See Page	Code		See Page	Code		See Page
A8		48	J34		53	S10	D	51
B5	A	48	L3		53	S11		51
B7	C	48	L4		53	T4		51
C10		49	P6		51	T5		51
G1		49	S7	A	51	T11		51
J6		50	S8	B	51			
J30		53	S9	C	51			

: Relay Blocks

Code	See Page	Relay Blocks (Relay Block Location)
3	22	Engine Room R/B (Engine Compartment Left)

: Junction Block and Wire Harness Connector

Code	See Page	Junction Block and Wire Harness (Connector Location)
1A	30	Engine Room Main Wire and Driver Side J/B (Lower Finish Panel)
1D	30	Floor Wire and Driver Side J/B (Lower Finish Panel)
1E	30	Instrument Panel Wire and Driver Side J/B (Lower Finish Panel)
1G		
1L	31	
1M		
4C	38	Instrument Panel Wire and Center Connector No.1 (Behind the Combination Meter)
4D		
4F		
4H		
4I		
4K		
4L		
5C	42	Instrument Panel Wire and Center Connector No.2 (Instrument Panel Brace RH)
5D		
5G		
5H		
5J		
5K		
5L		

: Connector Joining Wire Harness and Wire Harness

Code	See Page	Joining Wire Harness and Wire Harness (Connector Location)
IA3	58	Engine Room Main Wire and Instrument Panel Wire (Upper Parts of Front Body Pillar LH)
ID3	58	Instrument Panel Wire and Floor Wire (Left Kick Panel)
ID4		
IG1	59	Instrument Panel Wire and Instrument Panel No.2 Wire (Behind the Combination Meter)
IG2		
II1	59	Engine Wire and Instrument Panel Wire (Behind the Glove Box)
BH1	61	Back Door No.1 Wire and Floor Wire (Rear Side of Roof Panel)
BK2	61	Back Door No.1 Wire and Back Door No.2 Wire (Rear Side of Roof Panel)

cardiagn.com

▽ : **Ground Points**

Code	See Page	Ground Points Location
IH	58	Cowl Side Panel LH
II	58	Instrument Panel Brace LH
BL	60	Rear Side of Left Quarter Panel
BO	60	Center of the Back Door Panel

cardiagn.com

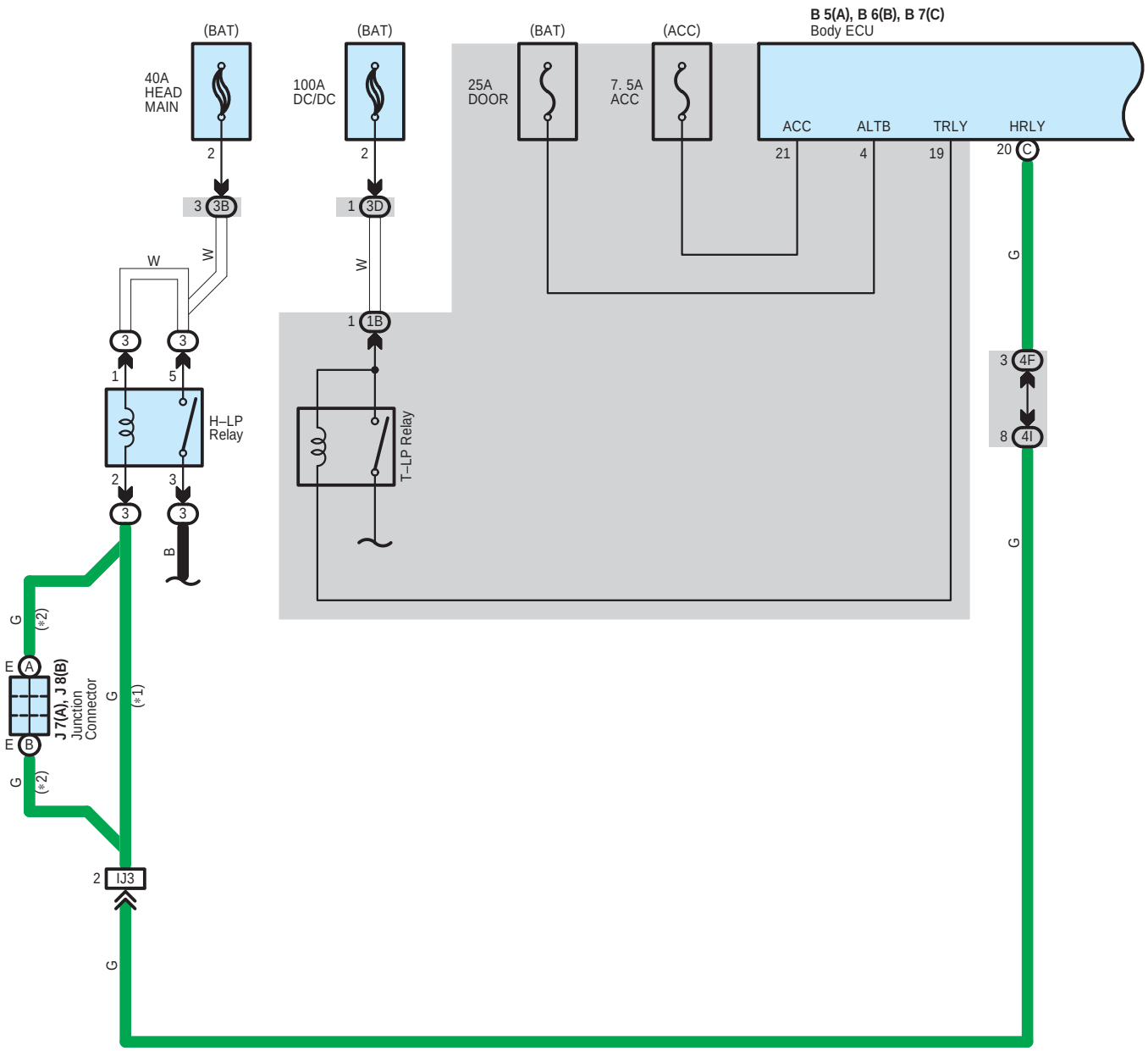

* 1 : w/ Daytime Running Light
* 2 : w/o Daytime Running Light

cardiagn.com

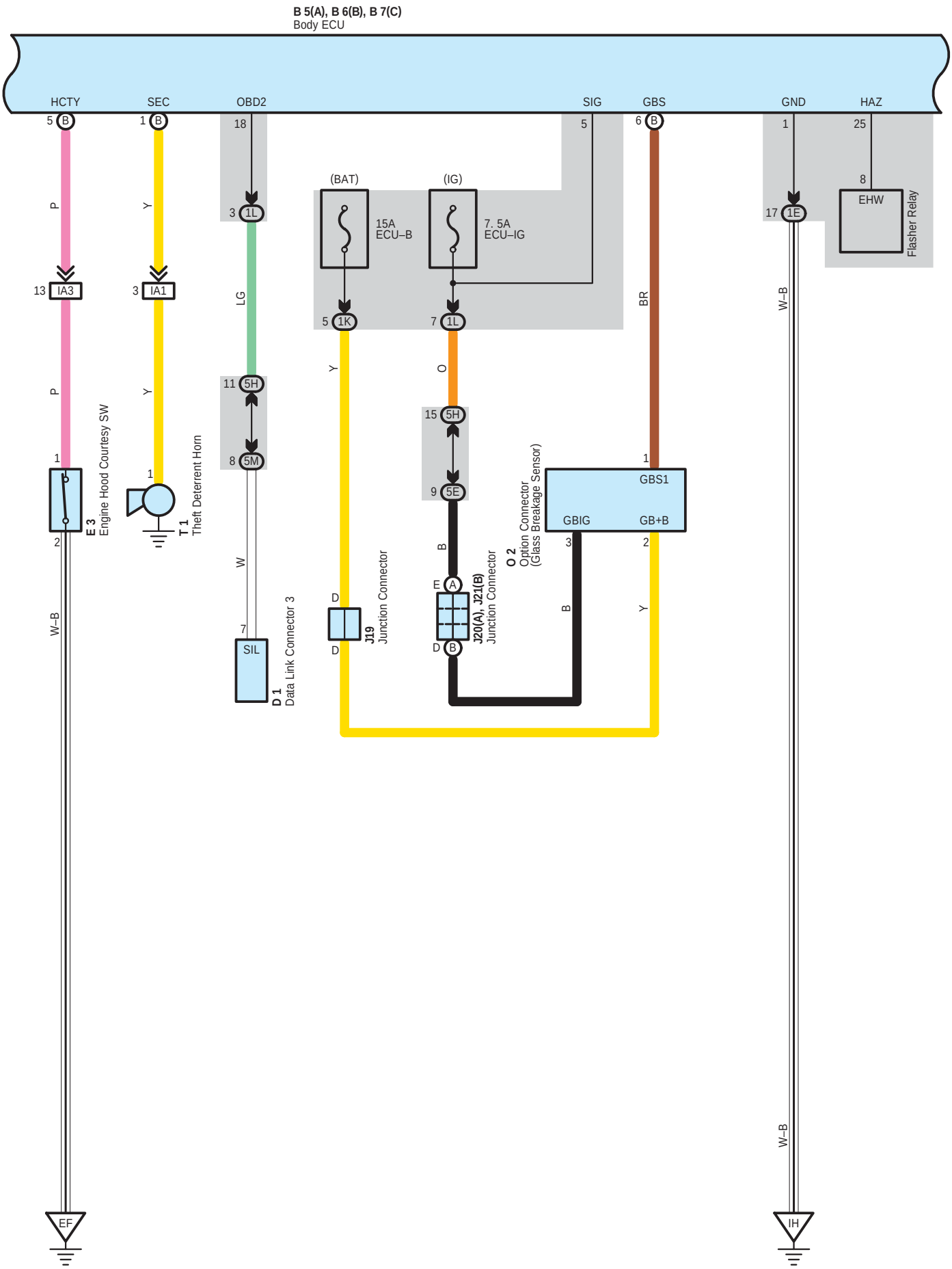

cardiagn.com

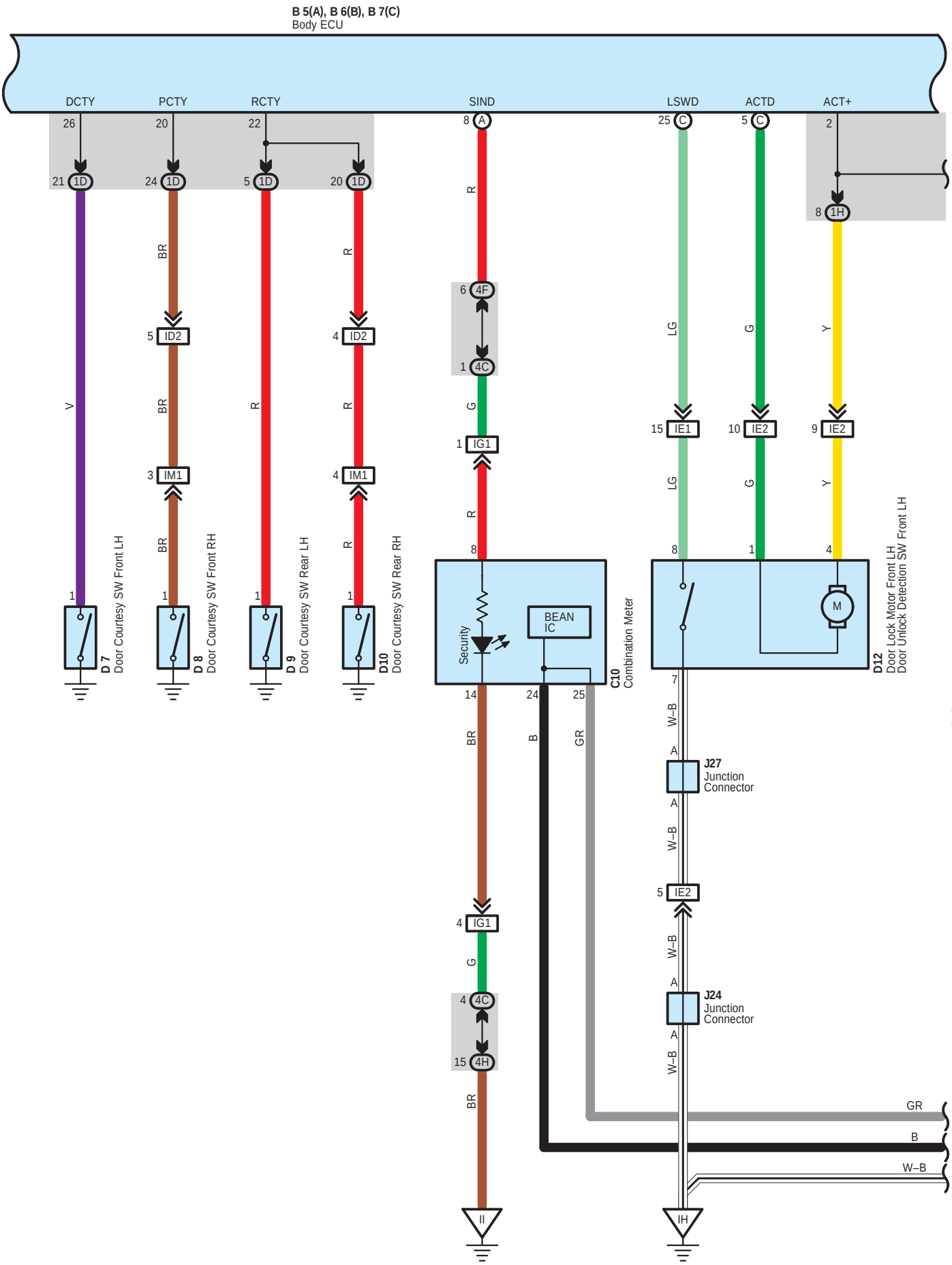

cardiagn.com

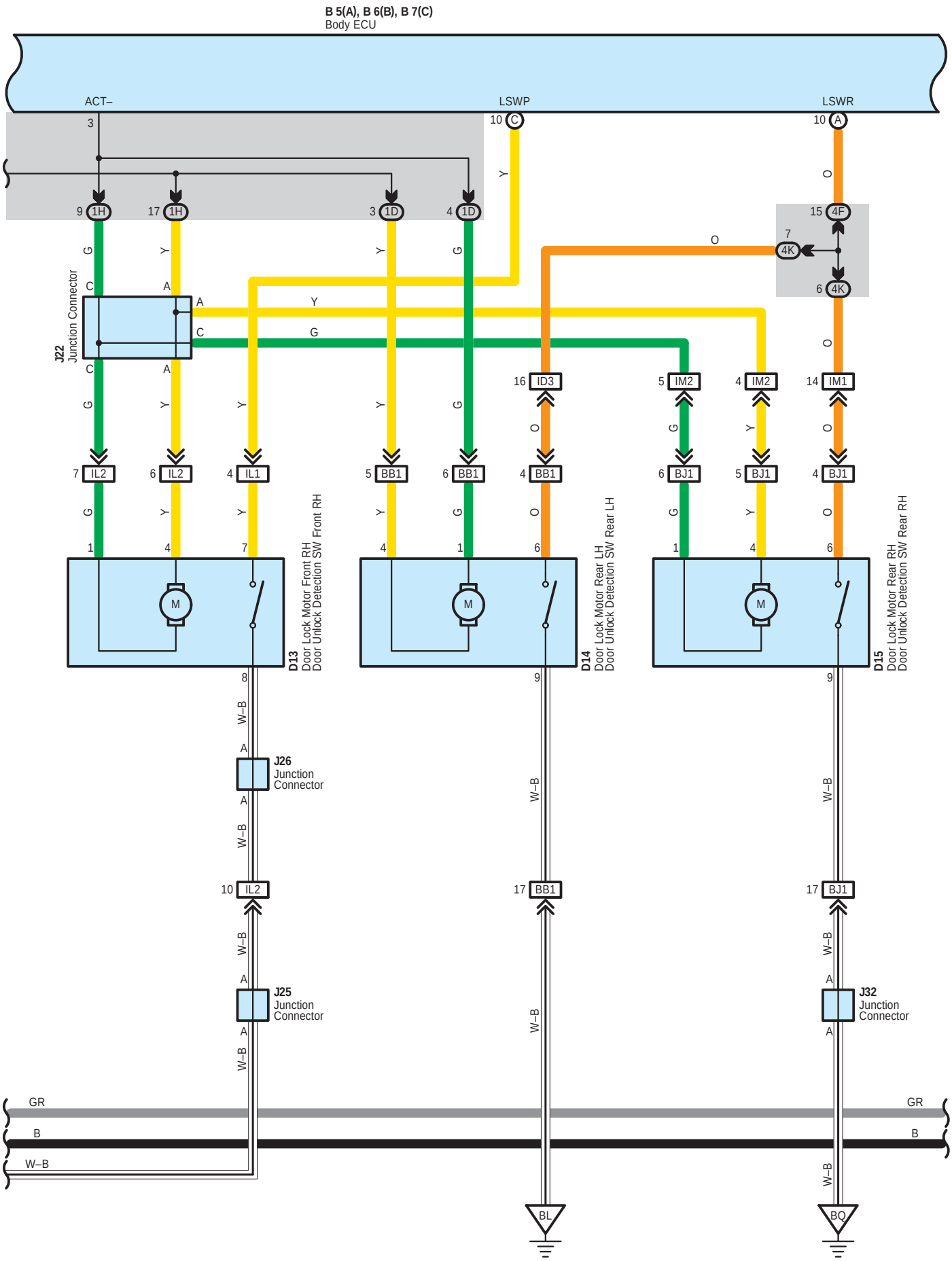

cardiagn.com

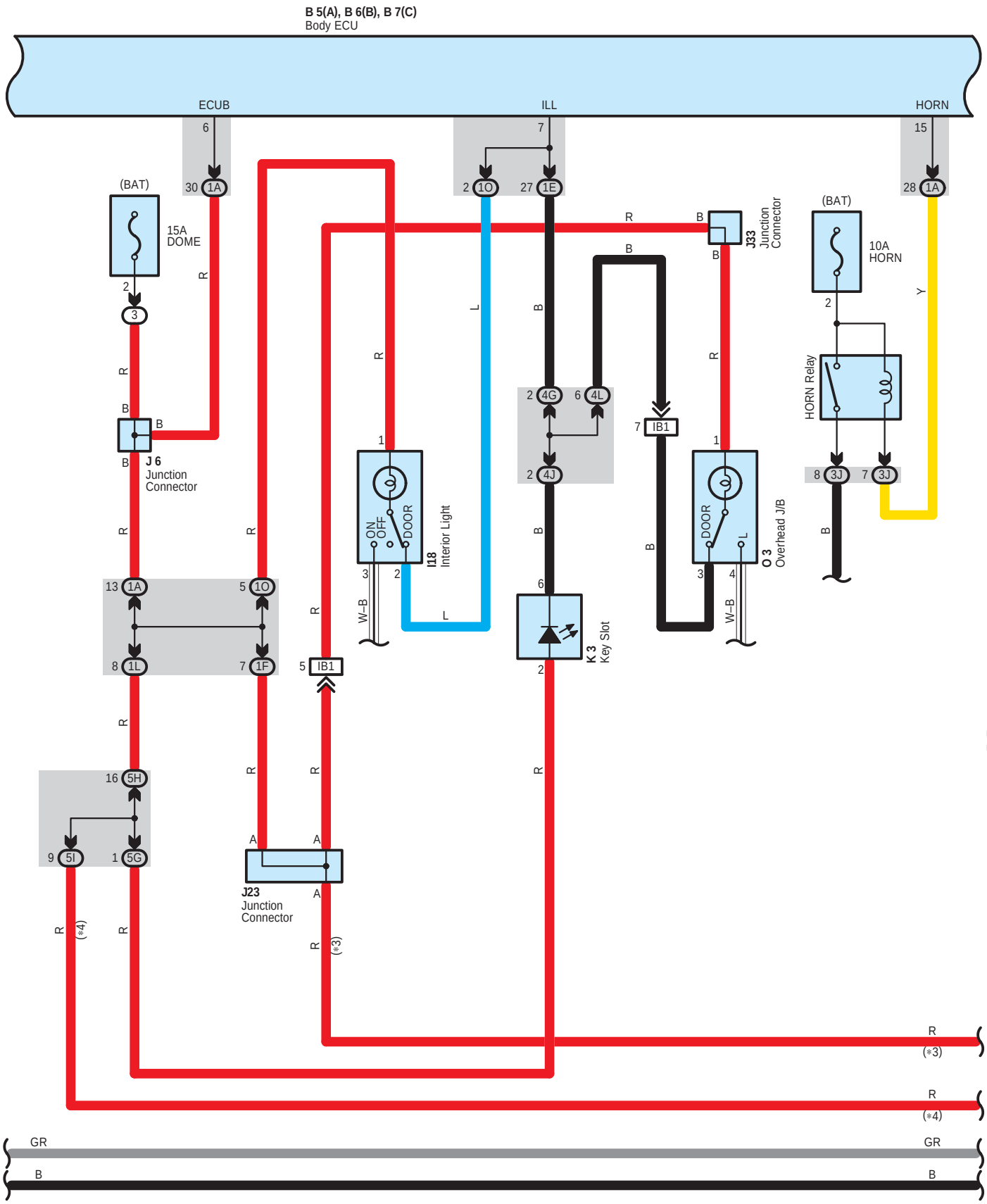

cardiagn.com

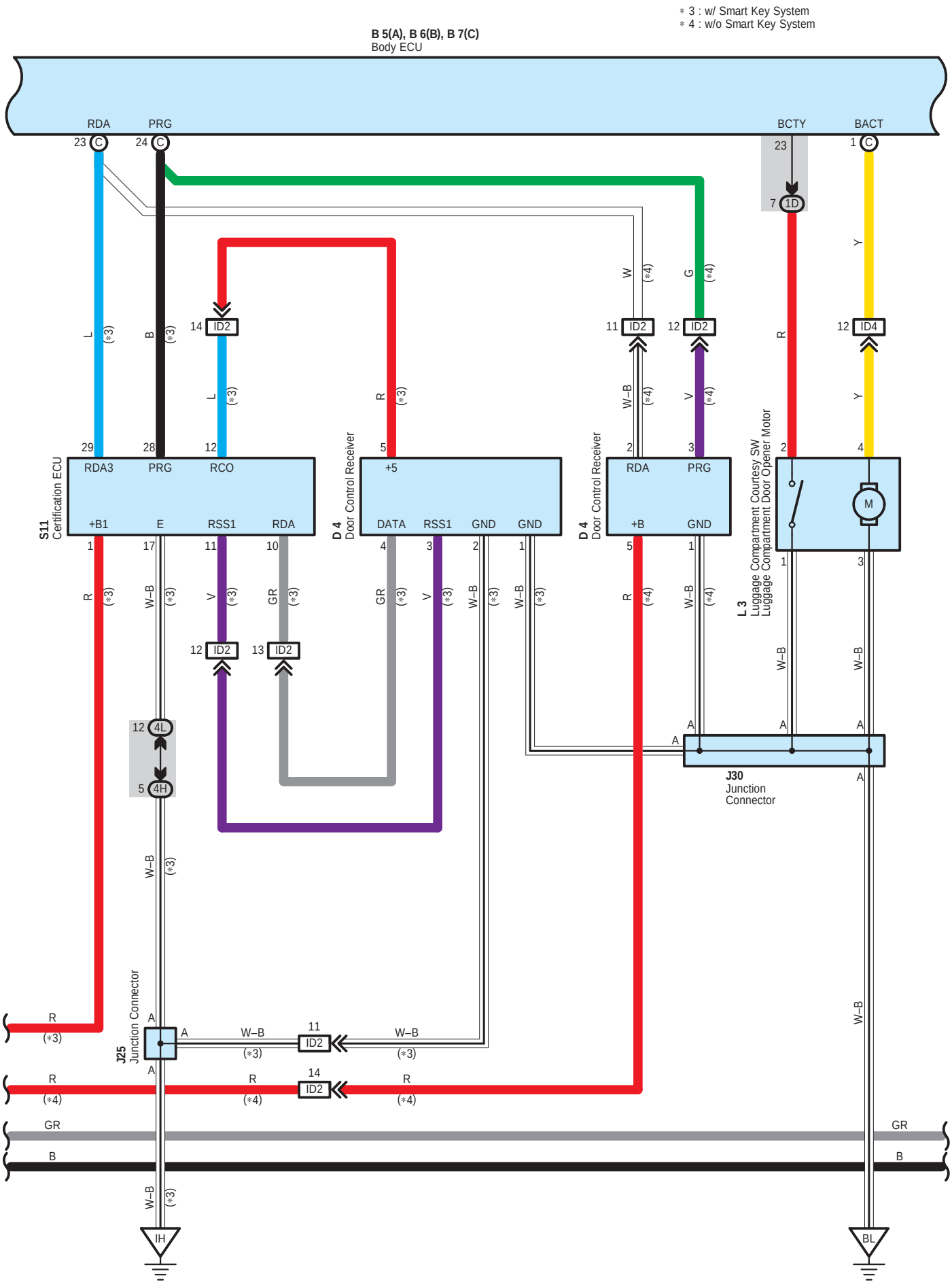

cardiagn.com

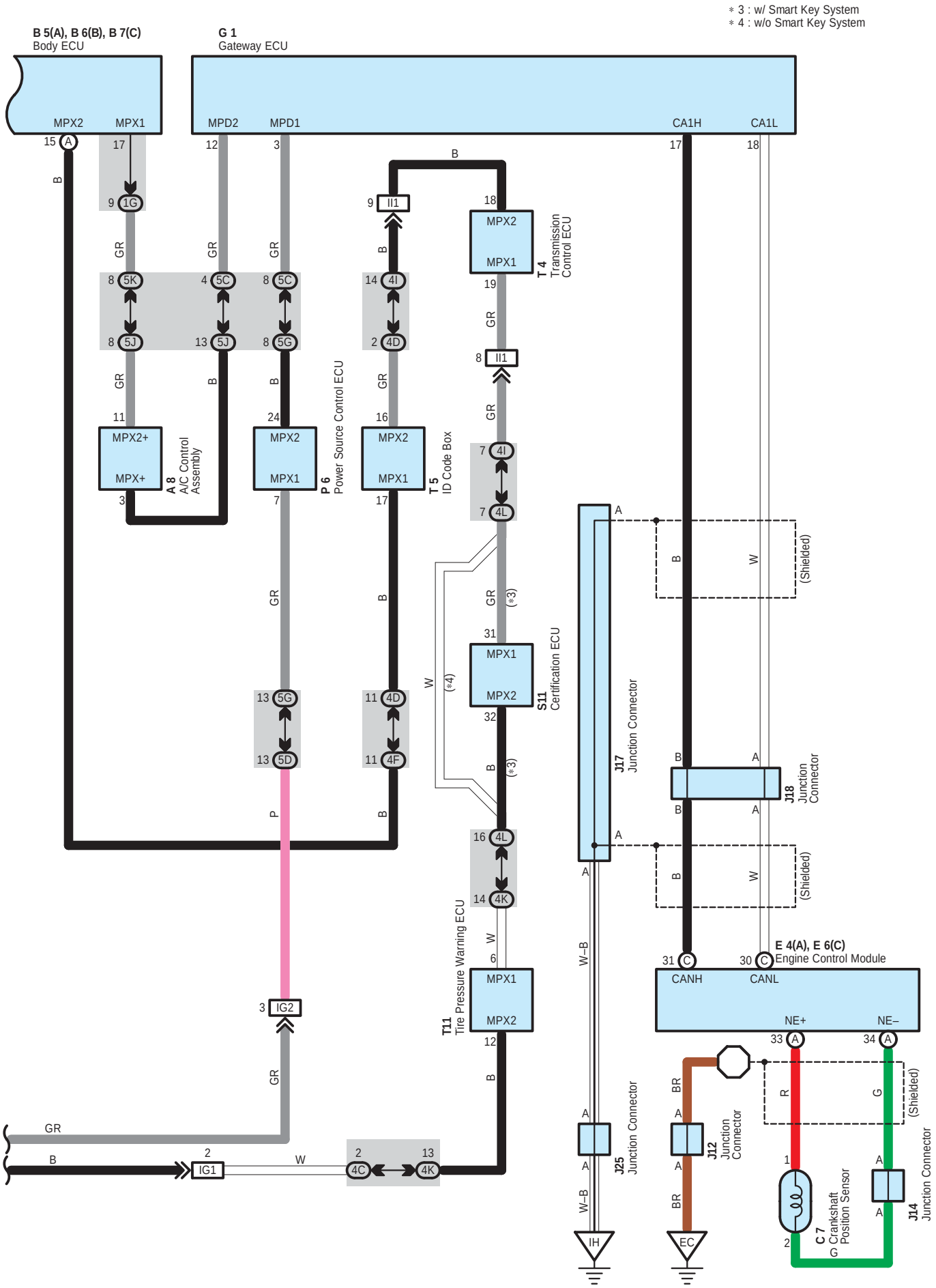

cardiagn.com

: Parts Location

Code		See Page	Code		See Page	Code	See Page
A8		48	E4	A	49	J25	50
B5	A	48	E6	C	49	J26	53
B6	B	48	G1		49	J27	53
B7	C	48	I18		53	J30	53
C7		46	J6		50	J32	53
C10		49	J7	A	50	J33	53
D1		49	J8	B	50	K3	50
D4		52	J12		50	L3	53
D7		52	J14		50	O2	51
D8		52	J17		50	O3	54
D9		52	J18		50	P6	51
D10		52	J19		50	S11	51
D12		52	J20	A	50	T1	47
D13		52	J21	B	50	T4	51
D14		52	J22		50	T5	51
D15		52	J23		50	T11	51
E3		46	J24		50		

: Relay Blocks

Code	See Page	Relay Blocks (Relay Block Location)
3	22	Engine Room R/B (Engine Compartment Left)

cardiagn.com

: **Junction Block and Wire Harness Connector**

Code	See Page	Junction Block and Wire Harness (Connector Location)
1A	30	Engine Room Main Wire and Driver Side J/B (Lower Finish Panel)
1B		
1D	30	Floor Wire and Driver Side J/B (Lower Finish Panel)
1E	30	Instrument Panel Wire and Driver Side J/B (Lower Finish Panel)
1F		
1G		
1H		
1K	31	
1L		
1O	30	Roof Wire and Driver Side J/B (Lower Finish Panel)
3B	23	Engine Room Main Wire and Engine Room J/B (Engine Compartment Left)
3D		
3J	24	
4C	38	Instrument Panel Wire and Center Connector No.1 (Behind the Combination Meter)
4D		
4F		
4G		
4H		
4I		
4J		
4K		
4L		
5C	42	Instrument Panel Wire and Center Connector No.2 (Instrument Panel Brace RH)
5D		
5E		
5G		
5H		
5I		
5J		
5K		
5M		

: **Connector Joining Wire Harness and Wire Harness**

Code	See Page	Joining Wire Harness and Wire Harness (Connector Location)
IA1	58	Engine Room Main Wire and Instrument Panel Wire (Upper Parts of Front Body Pillar LH)
IA3		
IB1	58	Roof Wire and Instrument Panel Wire (Upper Parts of Front Body Pillar LH)
ID2	58	Instrument Panel Wire and Floor Wire (Left Kick Panel)
ID3		
ID4		
IE1	58	Front Door LH Wire and Instrument Panel Wire (Left Kick Panel)
IE2		
IG1	59	Instrument Panel Wire and Instrument Panel No.2 Wire (Behind the Combination Meter)
IG2		
II1	59	Engine Wire and Instrument Panel Wire (Behind the Glove Box)
IJ3	59	Engine Room Main Wire and Instrument Panel Wire (Behind the Glove Box)
IL1	59	Front Door RH Wire and Instrument Panel Wire (Right Kick Panel)
IL2		
IM1	59	Instrument Panel Wire and Floor No.2 Wire (Right Kick Panel)
IM2		
BB1	60	Rear Door No.2 Wire and Floor Wire (Left Center Pillar)
BJ1	61	Rear Door No.1 Wire and Floor No.2 Wire (Right Center Pillar)

cardiagn.com

▽ : **Ground Points**

Code	See Page	Ground Points Location
EC	56	Engine Block
EF	56	Left Side of the Suspension Tower
IH	58	Cowl Side Panel LH
II	58	Instrument Panel Brace LH
BL	60	Rear Side of Left Quarter Panel
BQ	60	Rear Side of Right Quarter Panel

cardiagn.com

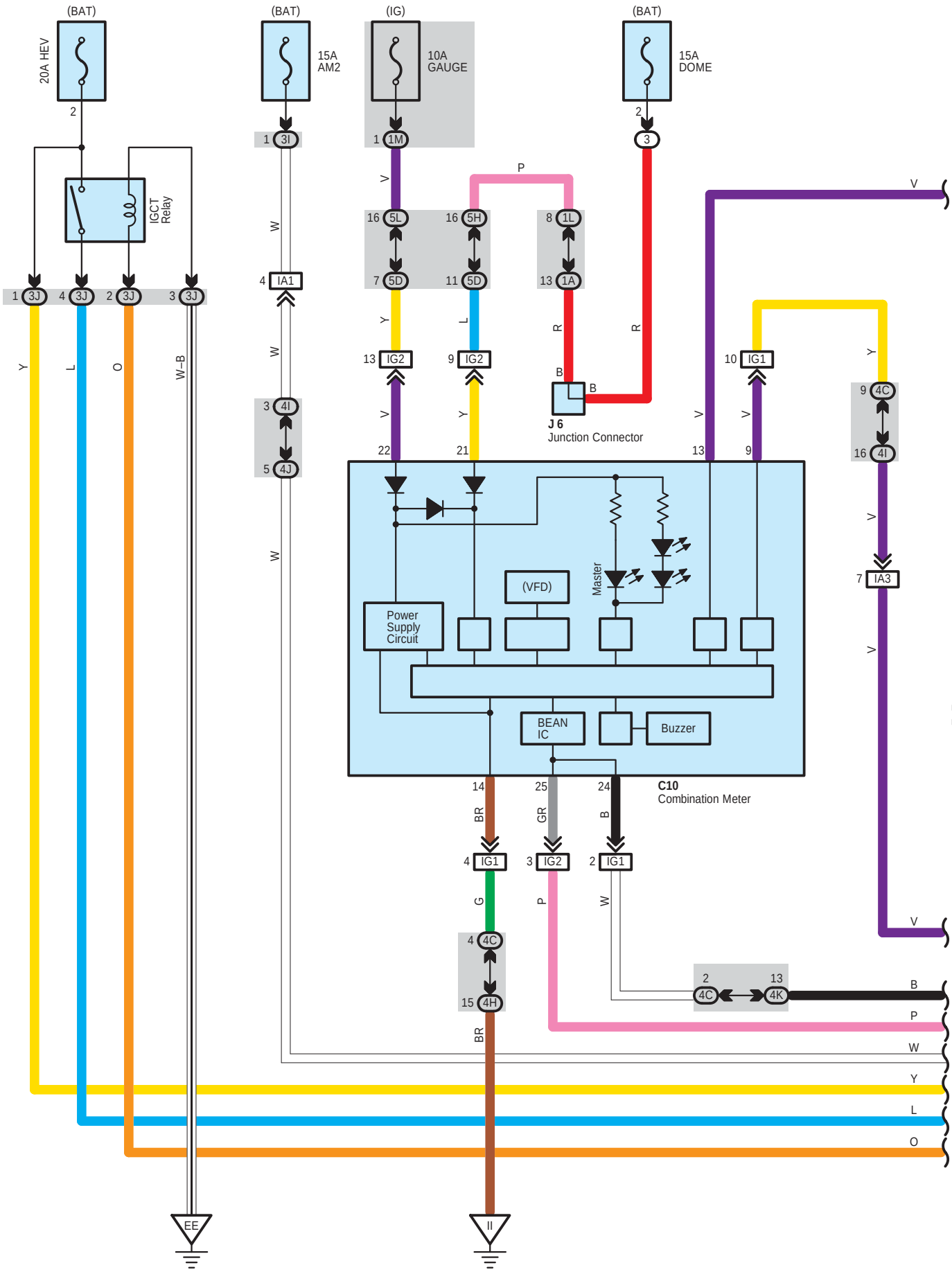

cardiagn.com

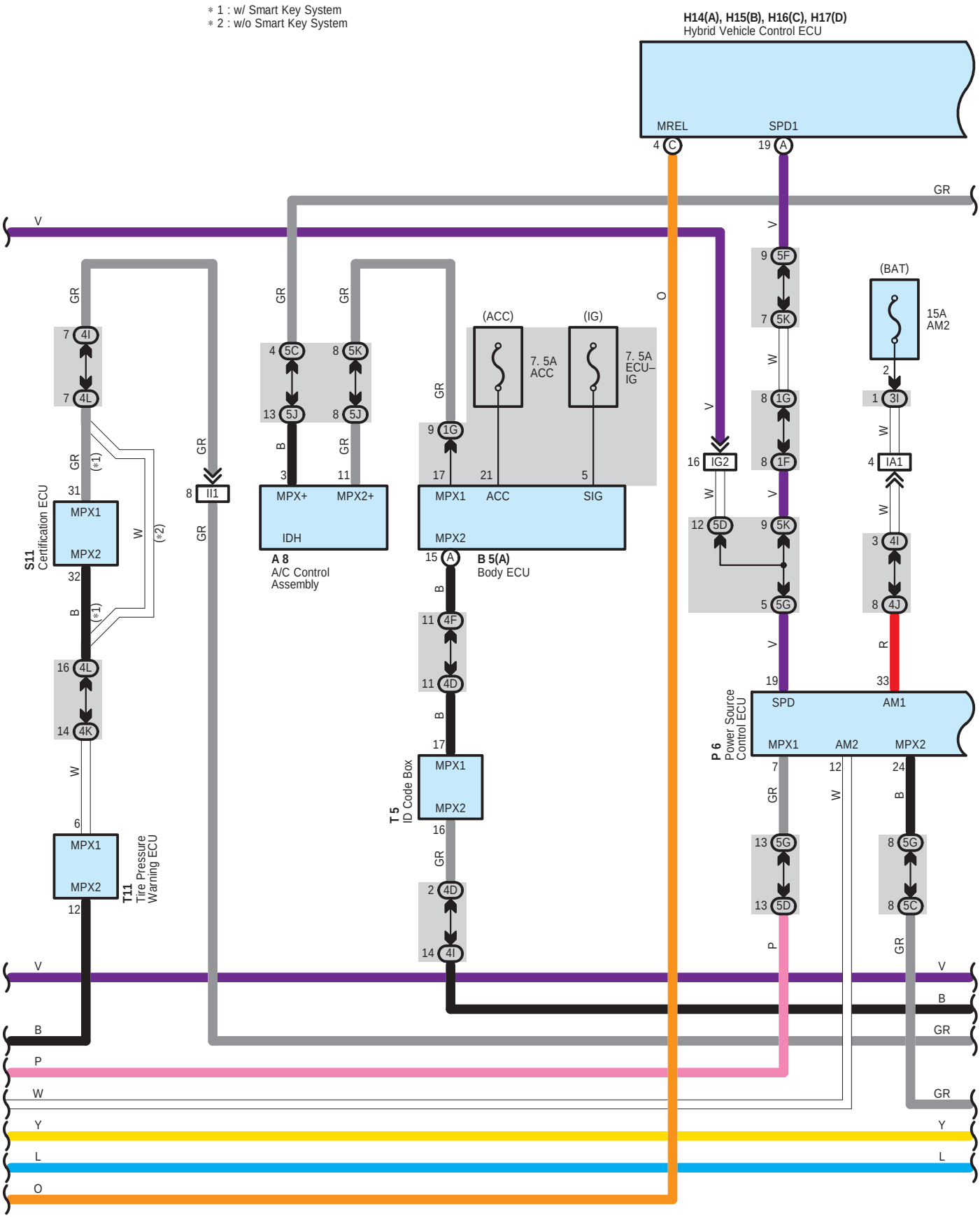

cardiagn.com

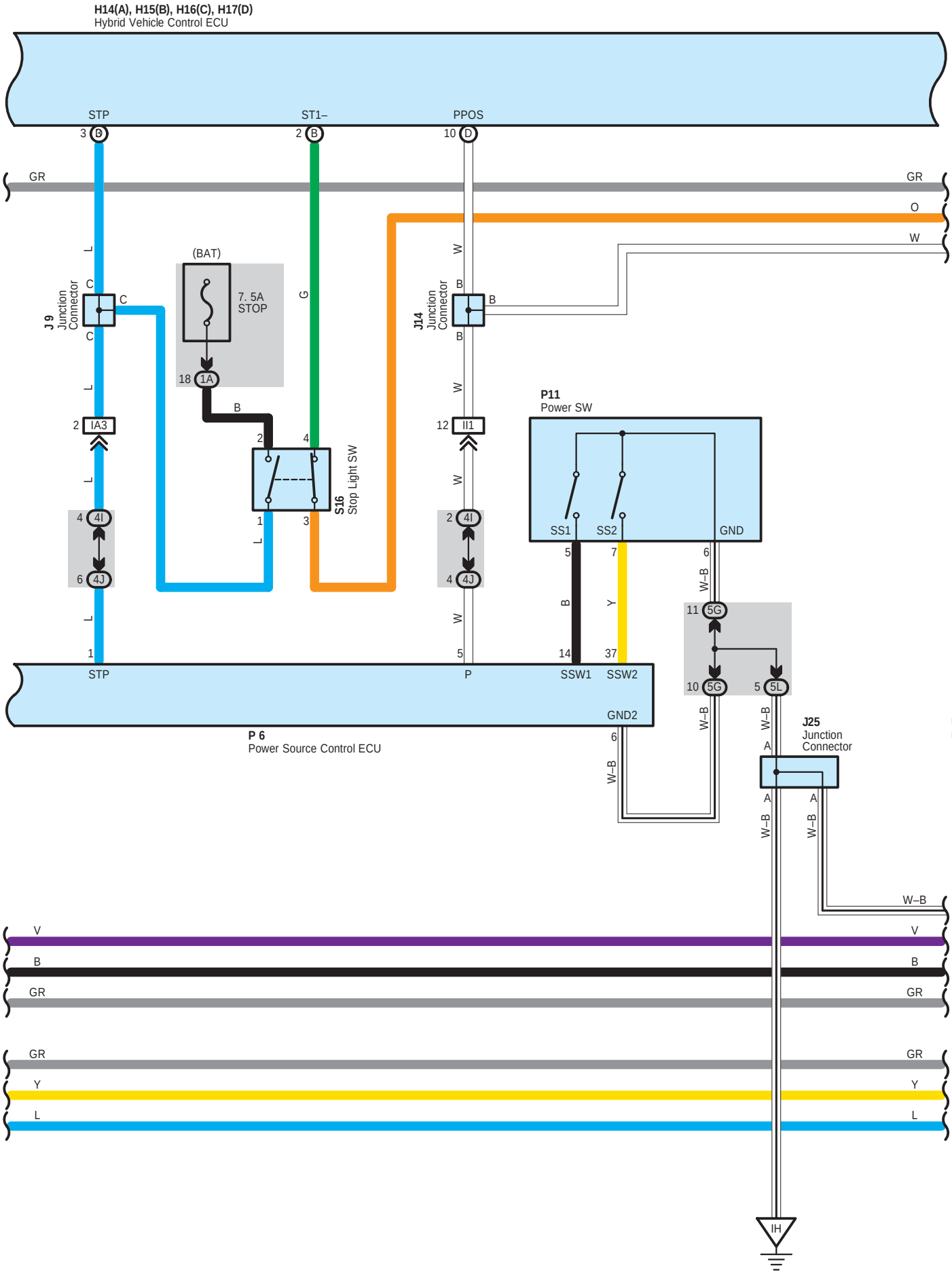

cardiagn.com

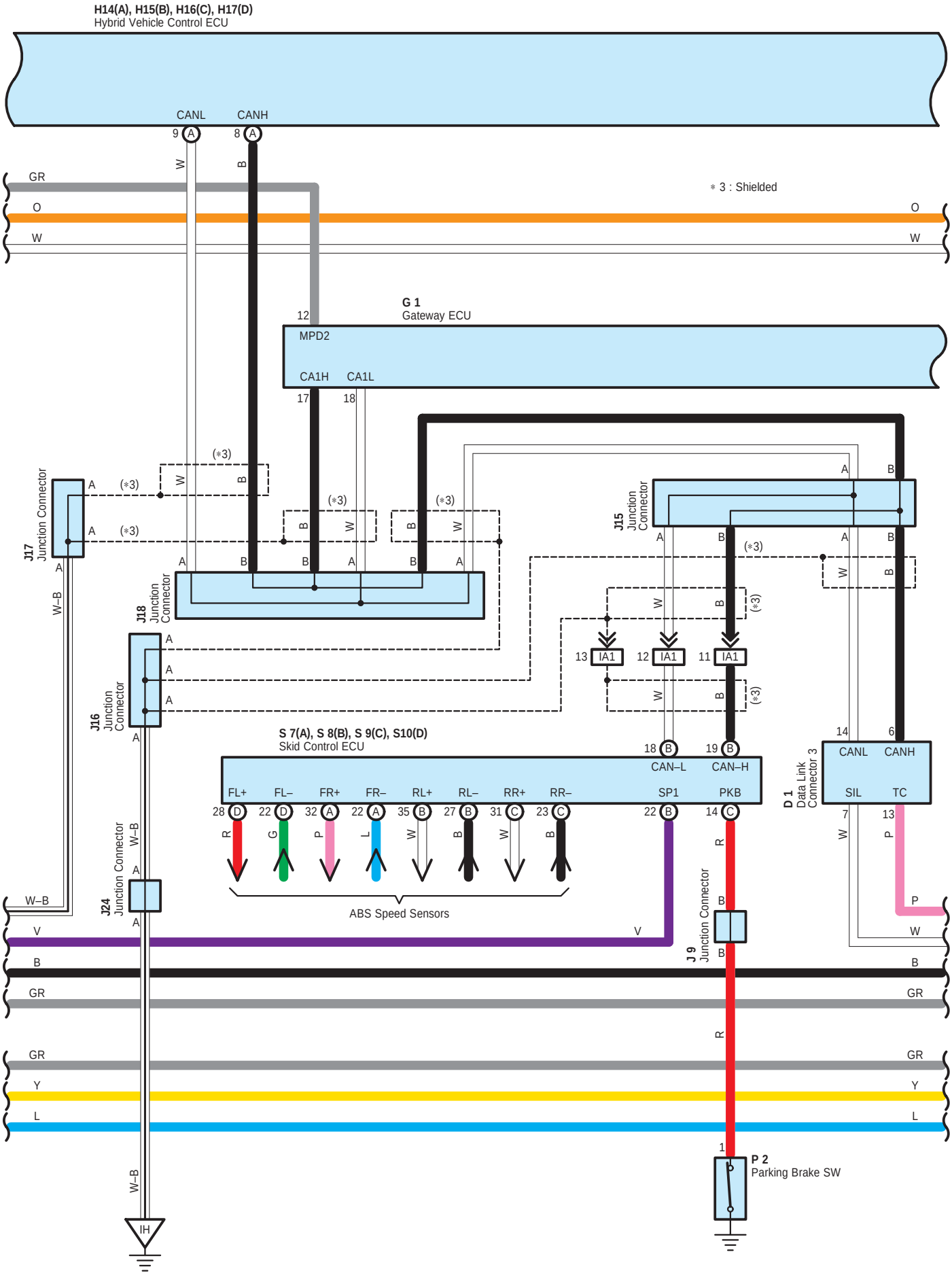

cardiagn.com

Shift Control System

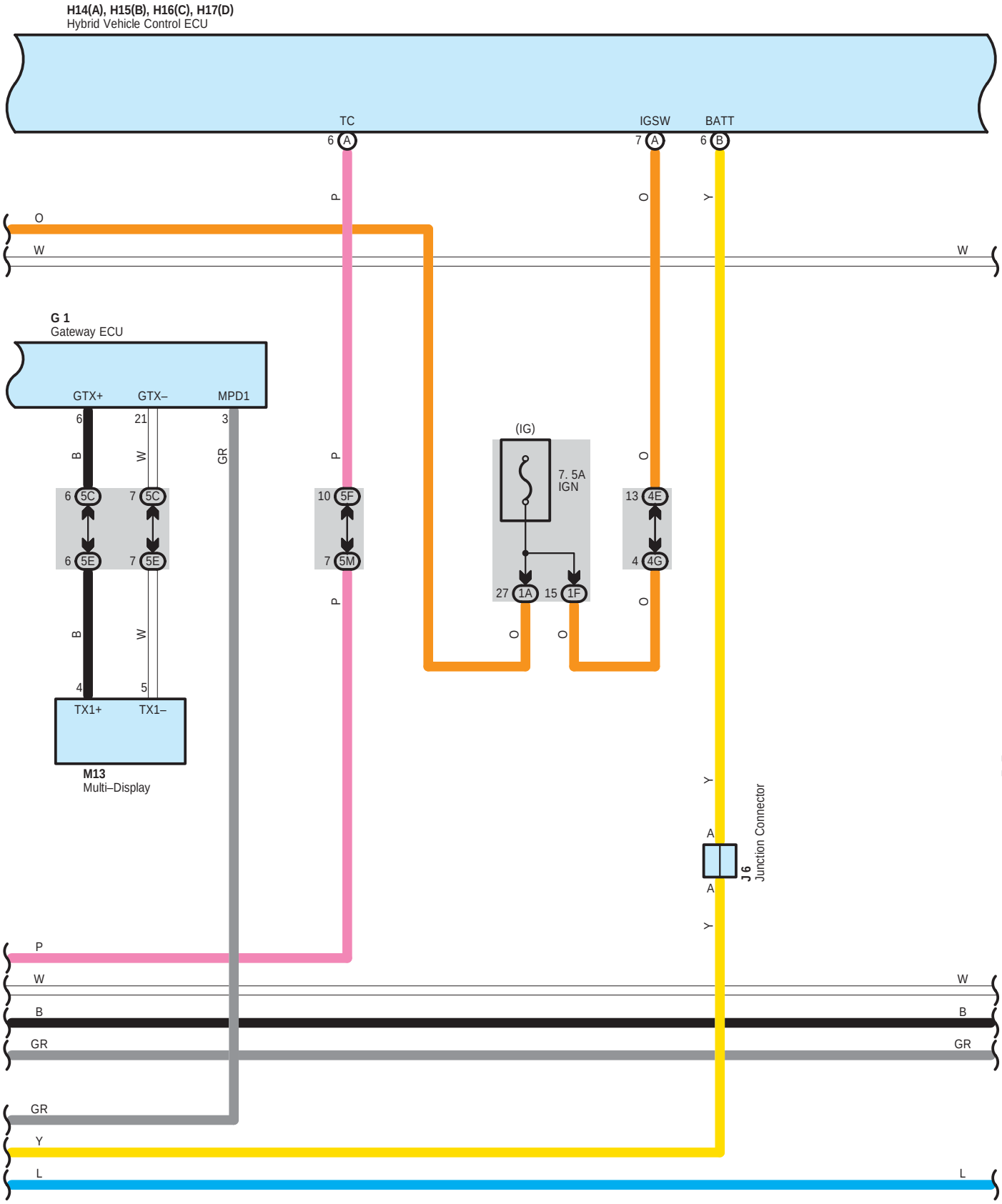

cardiagn.com

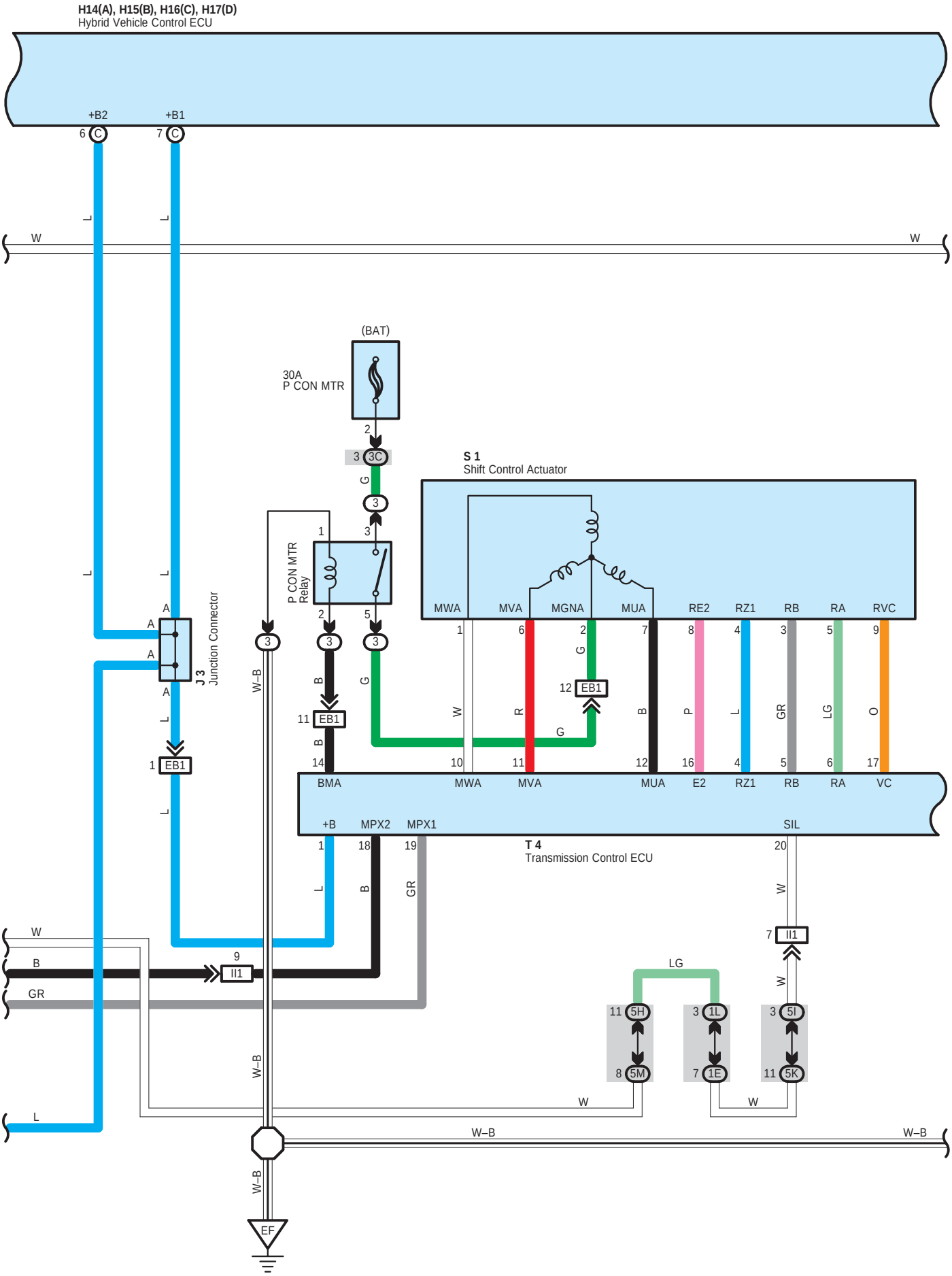

cardiagn.com

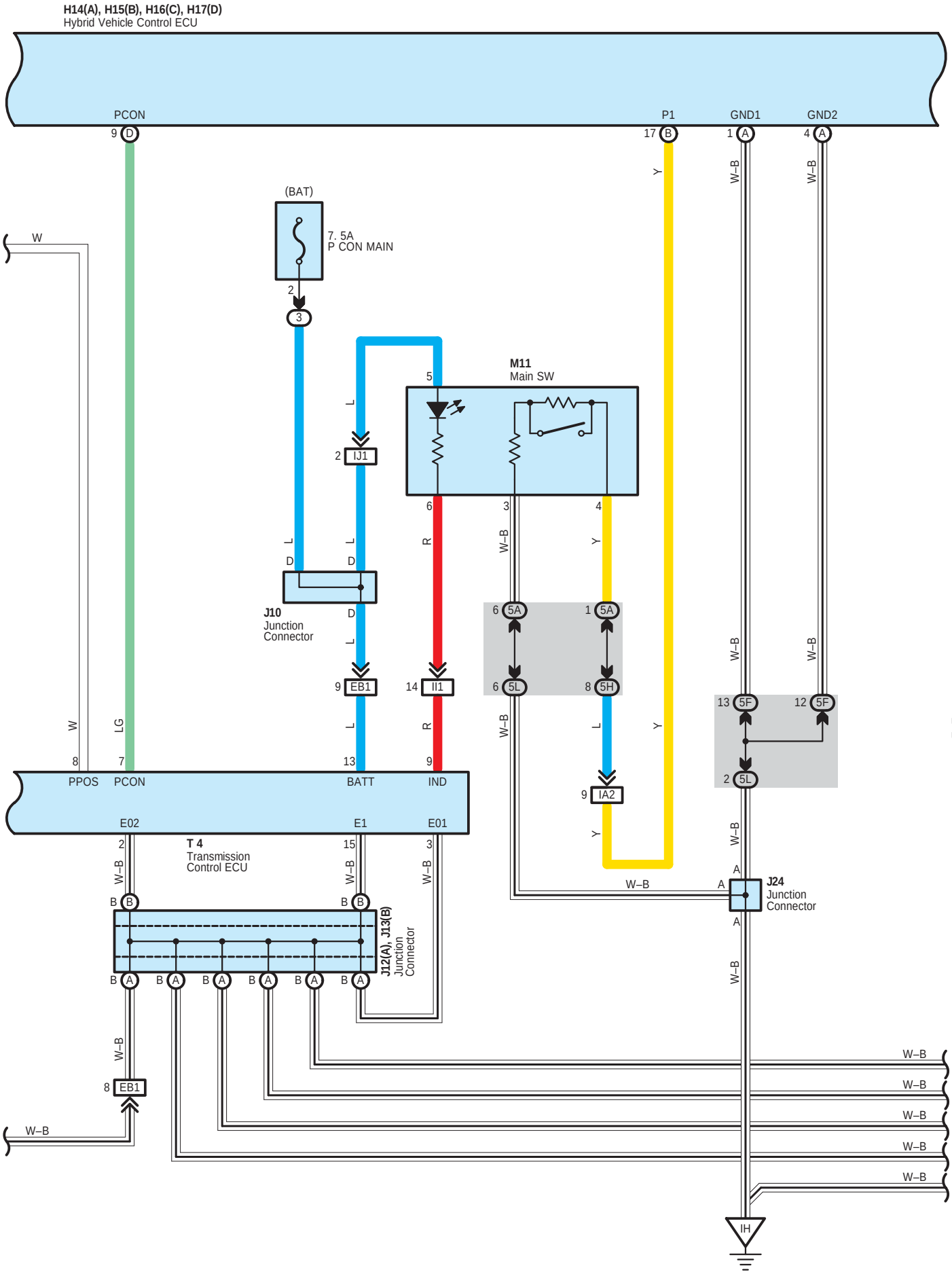

cardiagn.com

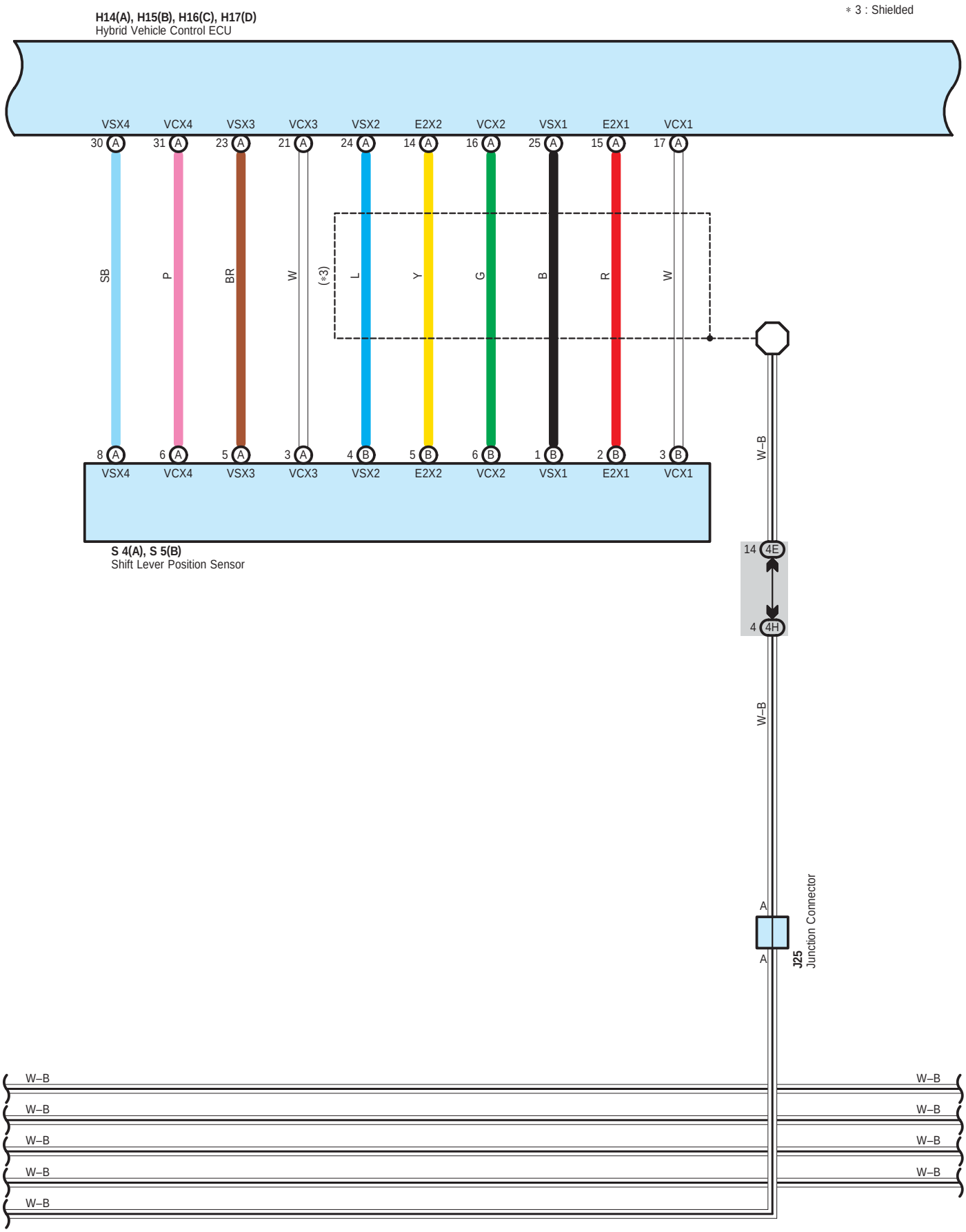

cardiagn.com

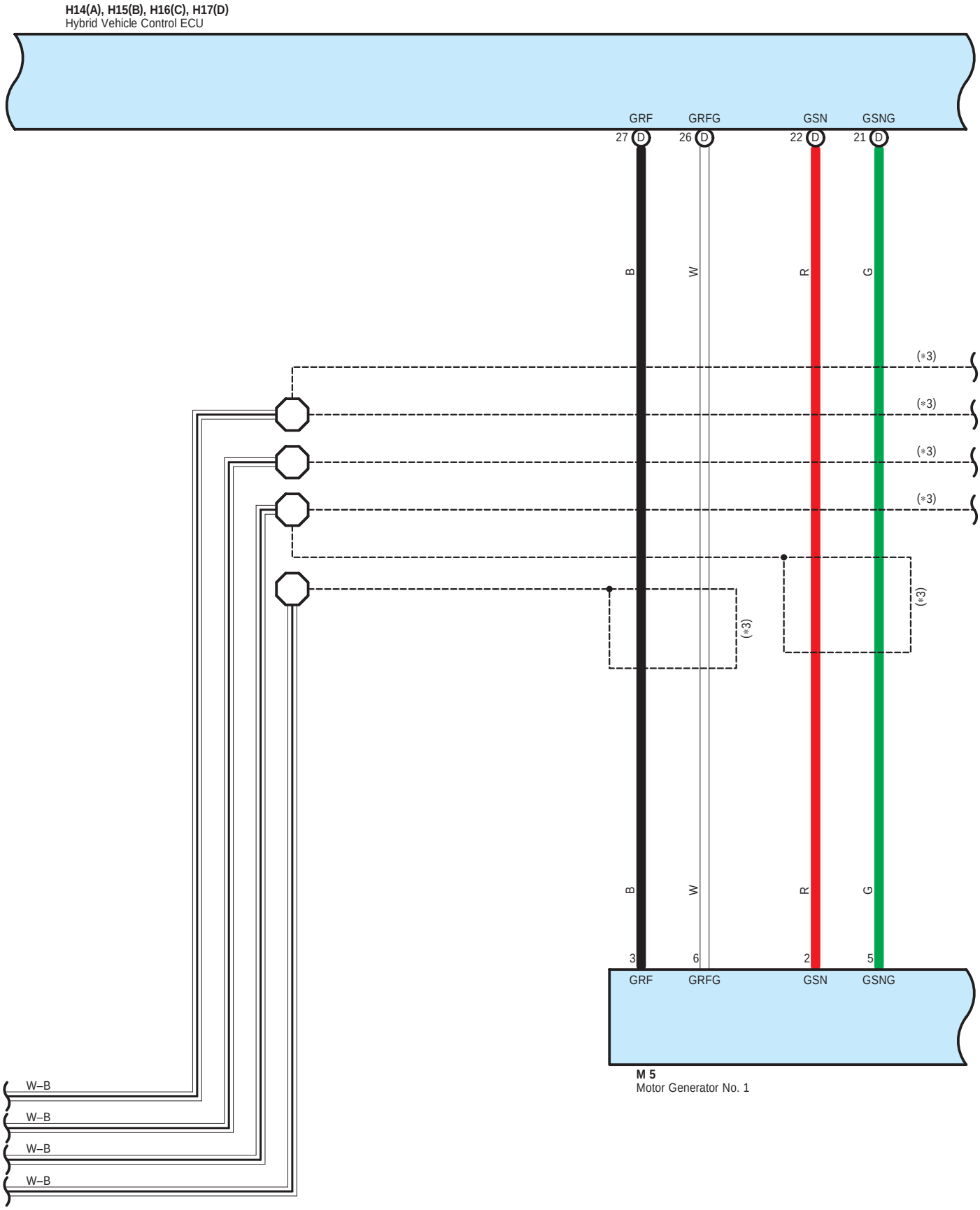

cardiagn.com

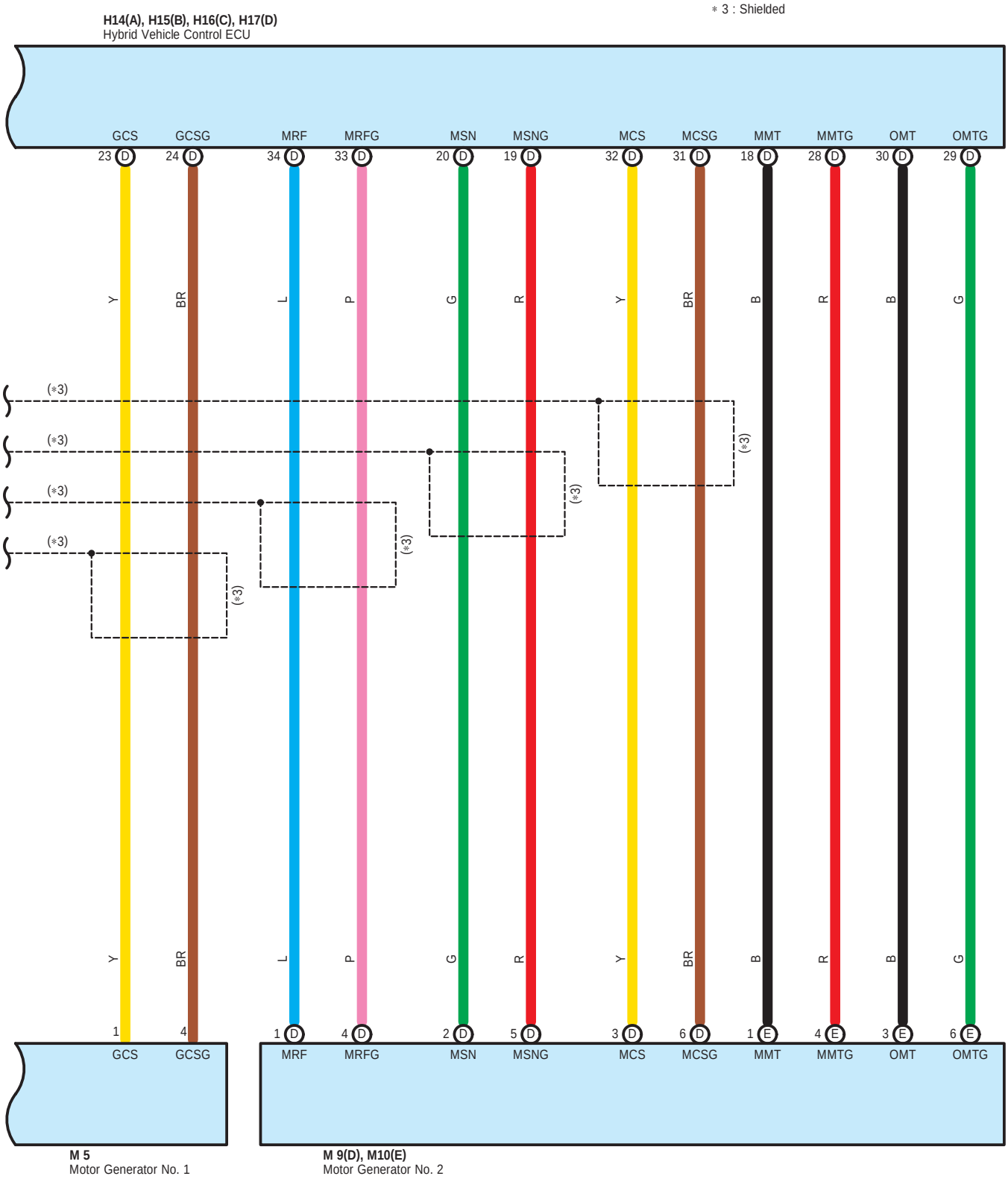

cardiagn.com

System Outline

Under this system, operating signal of shift lever is sent to hybrid vehicle control ECU to control hybrid motor, which changes shift positions (R, N, D, B) electrically. When shift is put in P position, transmission control ECU receives operating signal from hybrid vehicle control ECU and activates parking lock electrically.

1. Shift Range Change Function

Gear can be shifted to any shift range under condition when vehicle can drive except when reject function is in operation.
When vehicle cannot drive with power SW at IG ON position, gear can be shifted only to P and N position.
When vehicle cannot drive with power SW at ACC ON position, gear can be shifted only to P position.
When power SW is at OFF position, gear cannot be shifted to any position.
When main SW is operated at vehicle stop after starting hybrid system, gear is automatically changed to P position from any other gear position and turns off power supply.

2. Reject Function

Changing gear may not effect to change position under certain vehicle condition. Under such condition, warning buzzer of combination meter sounds to show the rejection and call for driver's attention. Followings are shift operations and shift position conditions under which reject function is activated.

* When gear is shifted from P position to other position without applying brake pedal, gear stays in P position.
* Main SW cannot put gear in P position during driving but changes to N position.
* Shift change to forward or backward during driving changes gear to N position.
* When gear is changed from other position than D position to B position, gear is changed to N position automatically.

3. Combination Meter Indication

The combination meter shows present shift position. Other shift positions than D or B position are not shown in lighting in the combination meter. This is to avoid unnecessary shifting operation to B position from other shift position except D position.

4. Operation of Parking Lock

Operation signal from/to P position is sent from main SW or power SW to transmission control ECU through hybrid vehicle control ECU. At that time the transmission control ECU operates P CON MTR relay, activates parking lock actuator with appropriate control of electric current, and lights up main SW when shift is at P position. If the system has abnormality on parking lock operation, it tells the system abnormality to the driver by lighting up master warning light on combination meter, displaying warning of the system abnormality on the multi–display, and blinking indicator light of main SW.

5. Operation at Electric Power OFF

Under electric power OFF, transmission control ECU receives signal from power source control ECU by multi–communication, and sends shift position information to hybrid vehicle control ECU. The hybrid vehicle control ECU sends signal to power source control ECU to tell whether it is right or wrong condition to turn off electric power. Accepted conditions for electric power OFF are as follows;

* When hybrid vehicle control ECU is not sending request signal for parking lock release with shift position in P position.
* With shift position is at other position than P position, when hybrid vehicle control ECU is outputting signal that hybrid system is not running or request signal for parking lock.
* When there is abnormal motor's not running condition with paring lock in operation, and hybrid system is not running and parking brake is being applied.

○ : **Parts Location**

Code	See Page	Code	See Page	Code	See Page
A8	48	J13 B	50	P6	51
B5 A	48	J14	50	P11	51
C10	49	J15	50	S1	47
D1	49	J16	50	S4 A	51
G1	49	J17	50	S5 B	51
H14 A	49	J18	50	S7 A	51
H15 B	49	J24	50	S8 B	51
H16 C	49	J25	50	S9 C	51
H17 D	49	M5	47	S10 D	51
J3	47	M9 D	47	S11	51
J6	50	M10 E	47	S16	51
J9	50	M11	50	T4	51
J10	50	M13	50	T5	51
J12 A	50	P2	51	T11	51

cardiagn.com

: **Relay Blocks**

Code	See Page	Relay Blocks (Relay Block Location)
3	22	Engine Room R/B (Engine Compartment Left)

: **Junction Block and Wire Harness Connector**

Code	See Page	Junction Block and Wire Harness (Connector Location)
1A	30	Engine Room Main Wire and Driver Side J/B (Lower Finish Panel)
1E	30	Instrument Panel Wire and Driver Side J/B (Lower Finish Panel)
1F		
1G		
1L	31	
1M		
3C	23	Engine Room Main Wire and Engine Room J/B (Engine Compartment Left)
3I	24	
3J		
4C	38	Instrument Panel Wire and Center Connector No.1 (Behind the Combination Meter)
4D		
4E		
4F		
4G		
4H		
4I		
4J		
4K		
4L		
5A	42	Instrument Panel Wire and Center Connector No.2 (Instrument Panel Brace RH)
5C		
5D		
5E		
5F		
5G		
5H		
5I		
5J		
5K		
5L		
5M		

: **Connector Joining Wire Harness and Wire Harness**

Code	See Page	Joining Wire Harness and Wire Harness (Connector Location)
EB1	56	Engine Wire and Engine Room Main Wire (Inside of the Engine Room R/B)
IA1	58	Engine Room Main Wire and Instrument Panel Wire (Upper Parts of Front Body Pillar LH)
IA2		
IA3		
IG1	59	Instrument Panel Wire and Instrument Panel No.2 Wire (Behind the Combination Meter)
IG2		
II1	59	Engine Wire and Instrument Panel Wire (Behind the Glove Box)
IJ1	59	Engine Room Main Wire and Instrument Panel Wire (Behind the Glove Box)

cardiagn.com

▽ : **Ground Points**

Code	See Page	Ground Points Location
EE	56	Left Side of the Suspension Tower
EF		
IH	58	Cowl Side Panel LH
II	58	Instrument Panel Brace LH

cardiagn.com

cardiagn.com

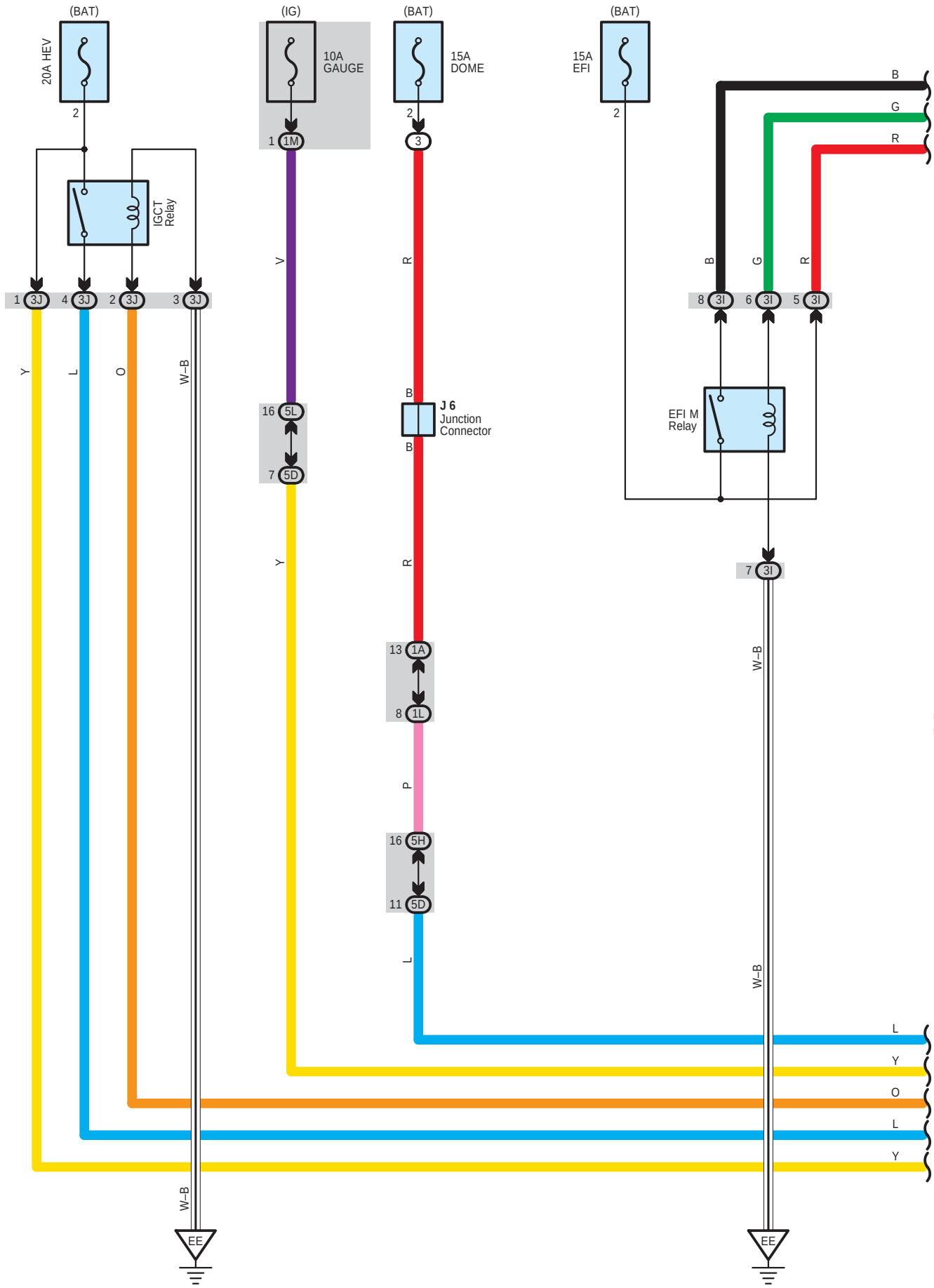

cardiagn.com

∗1 : Shielded

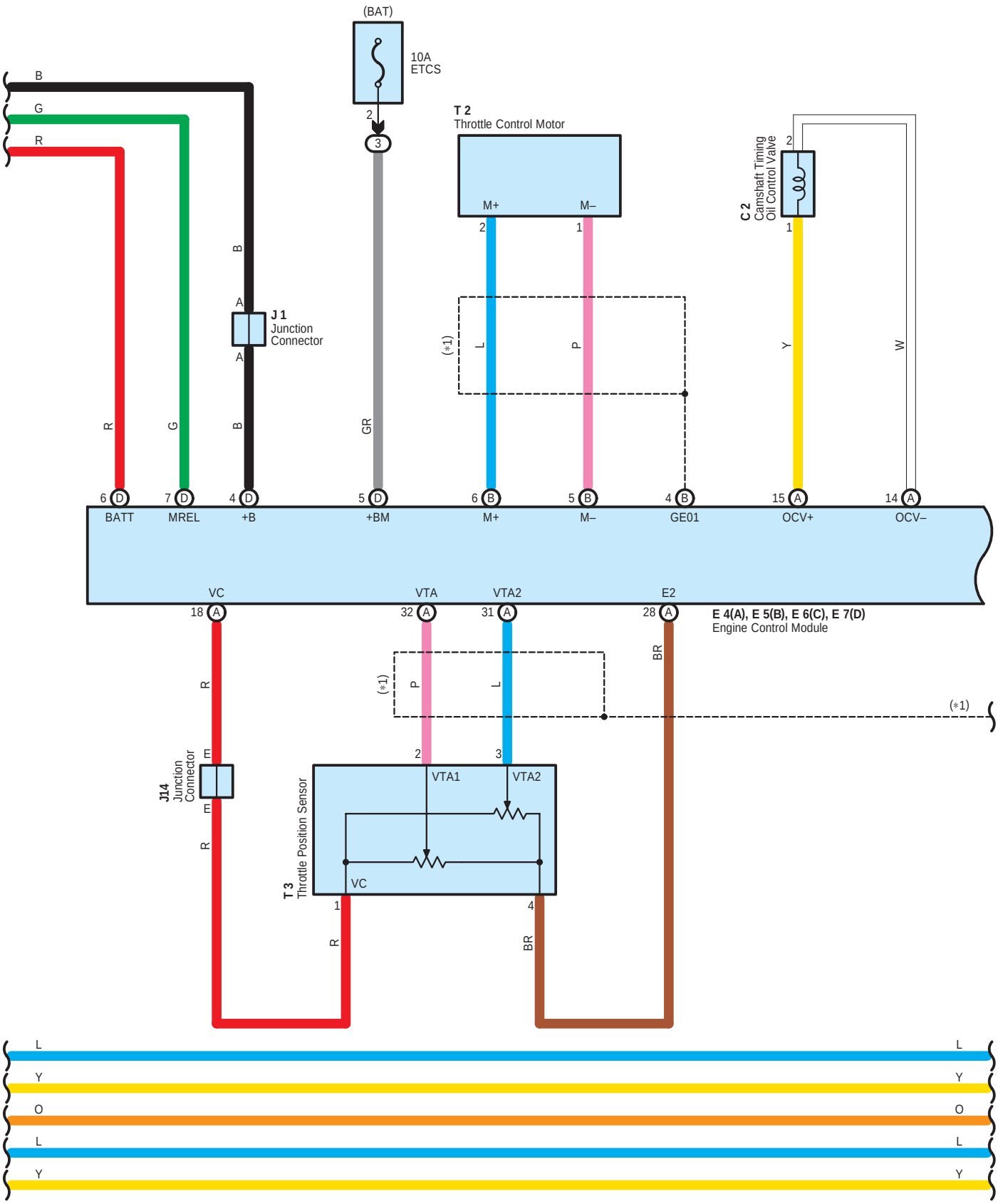

cardiagn.com

∗1 : Shielded

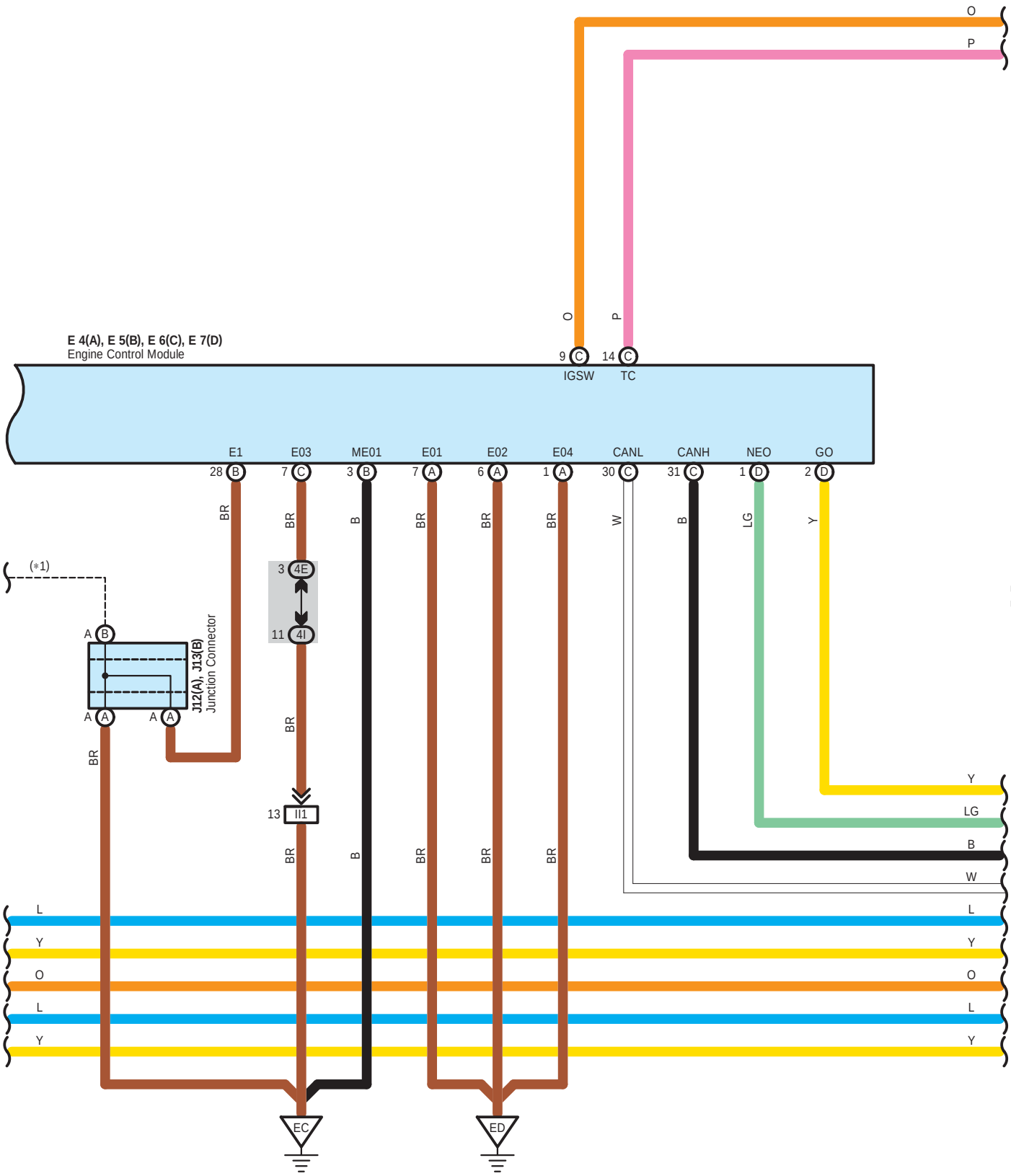

cardiagn.com

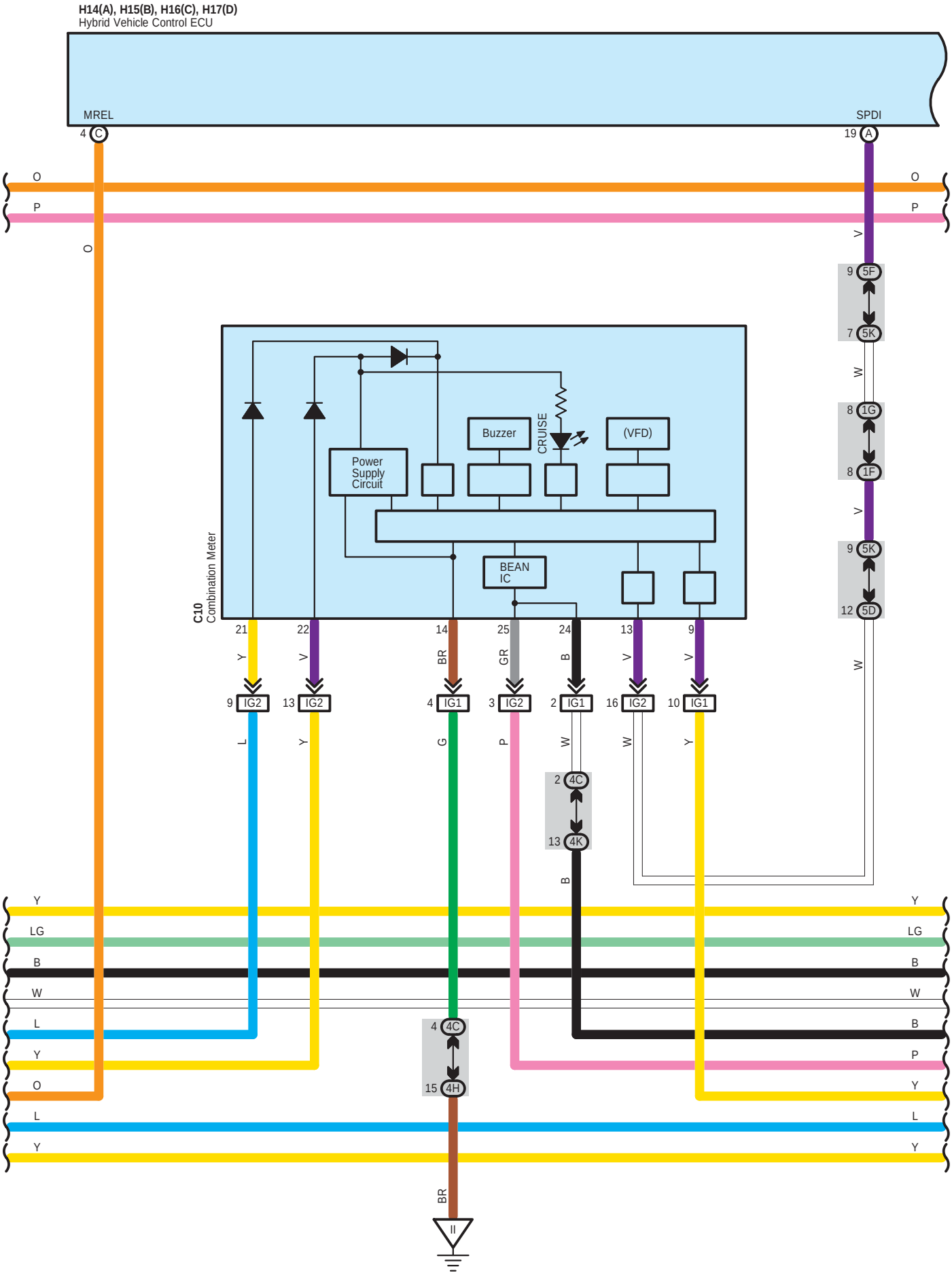

cardiagn.com

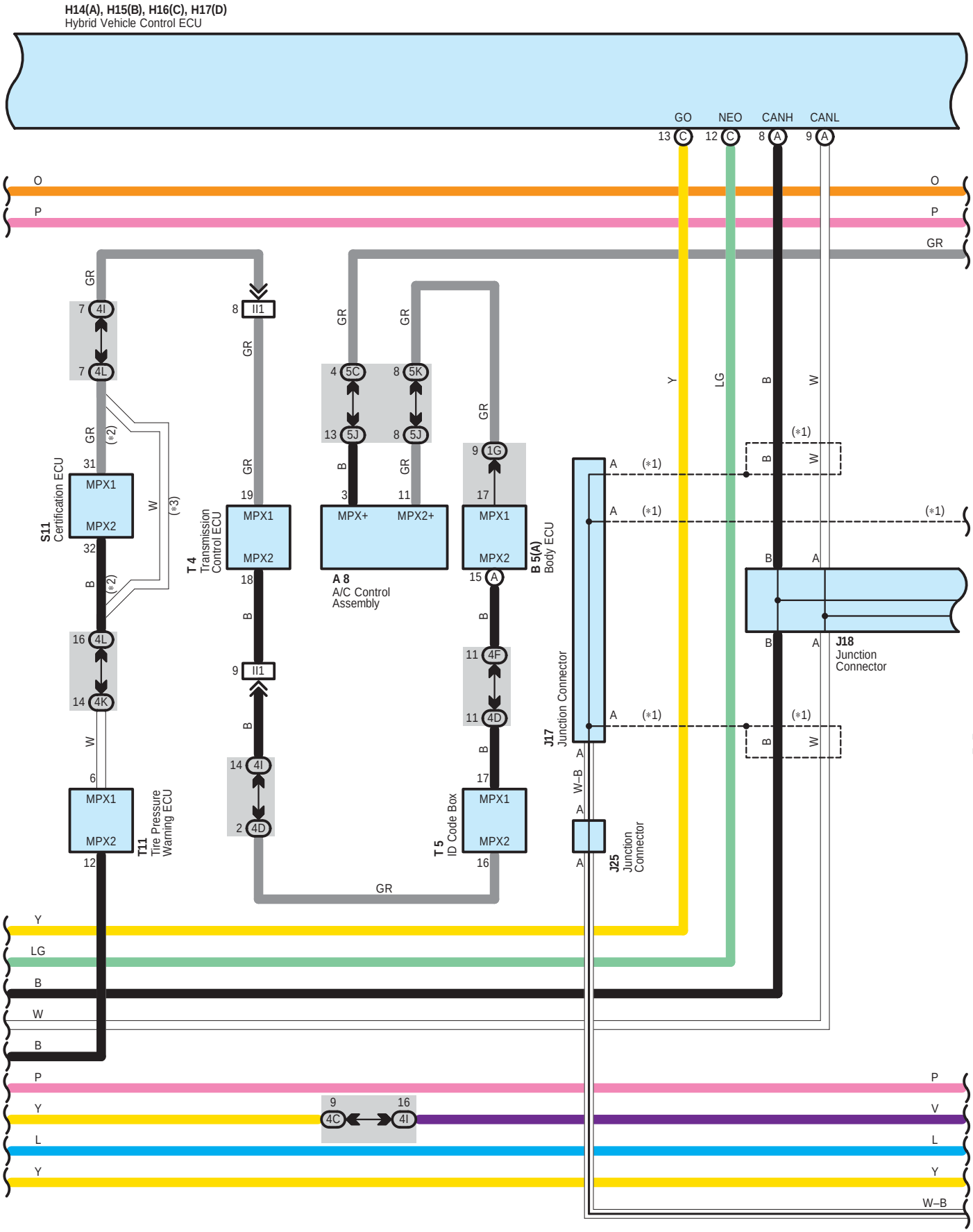

cardiagn.com

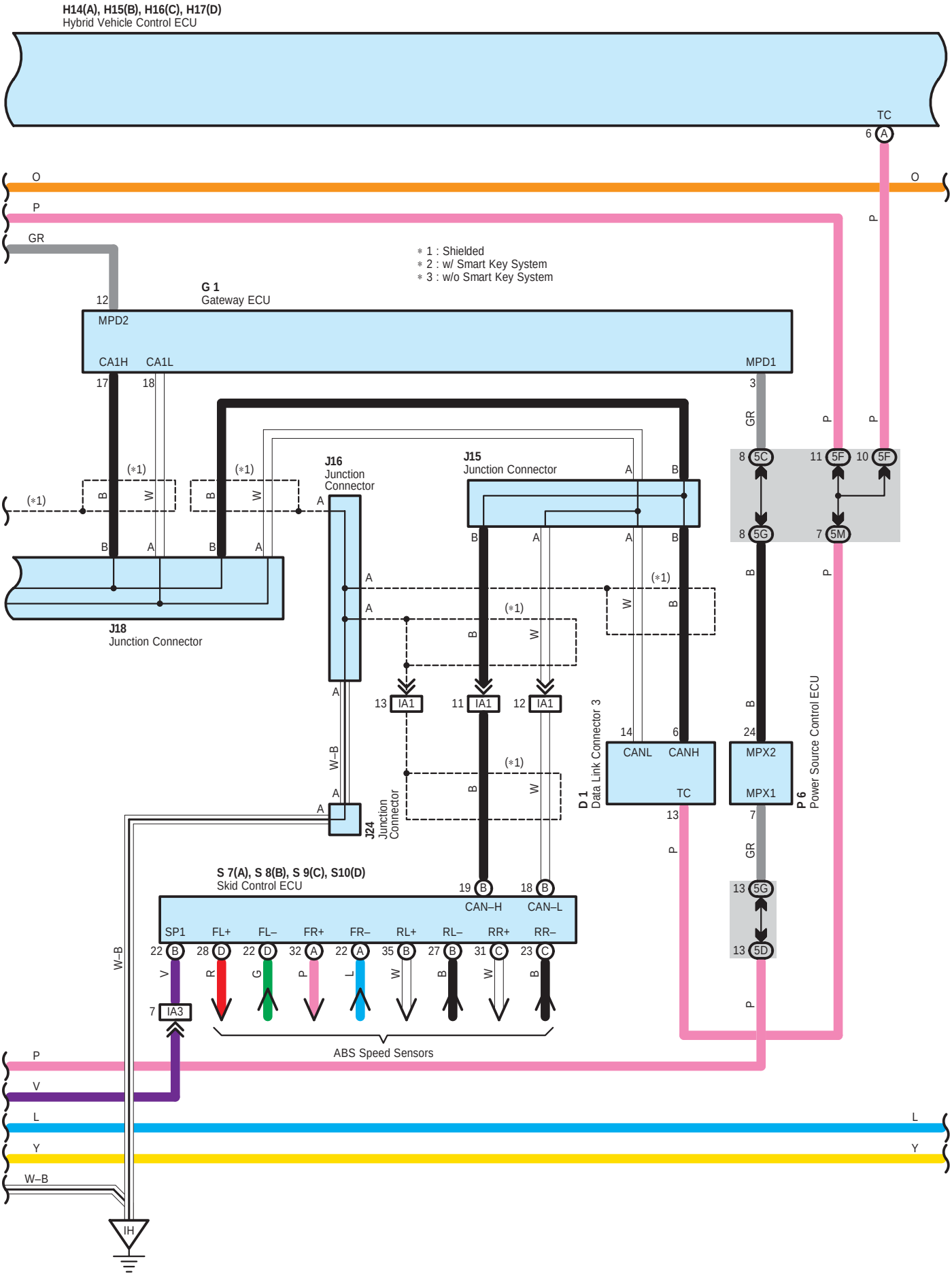

cardiagn.com

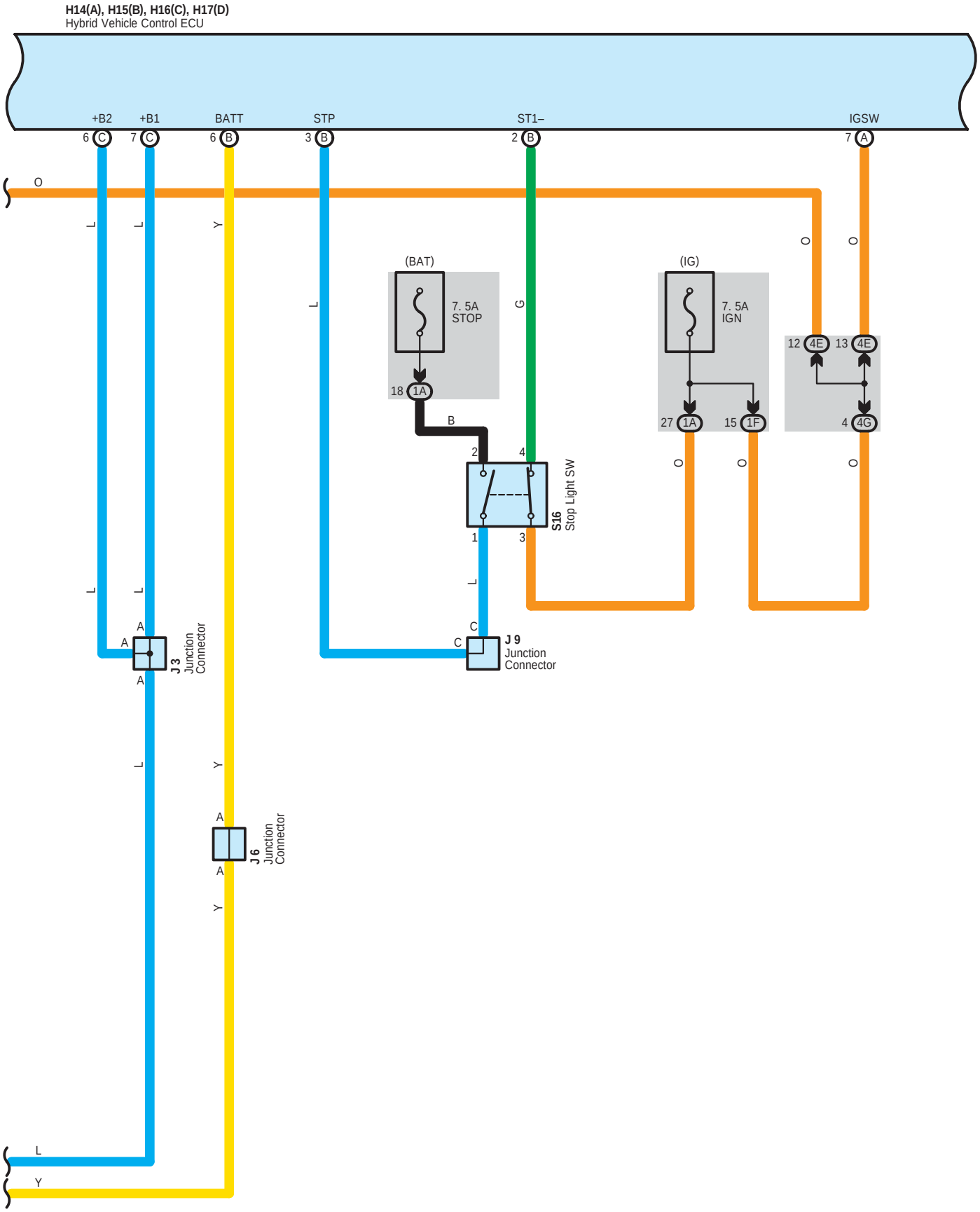

cardiagn.com

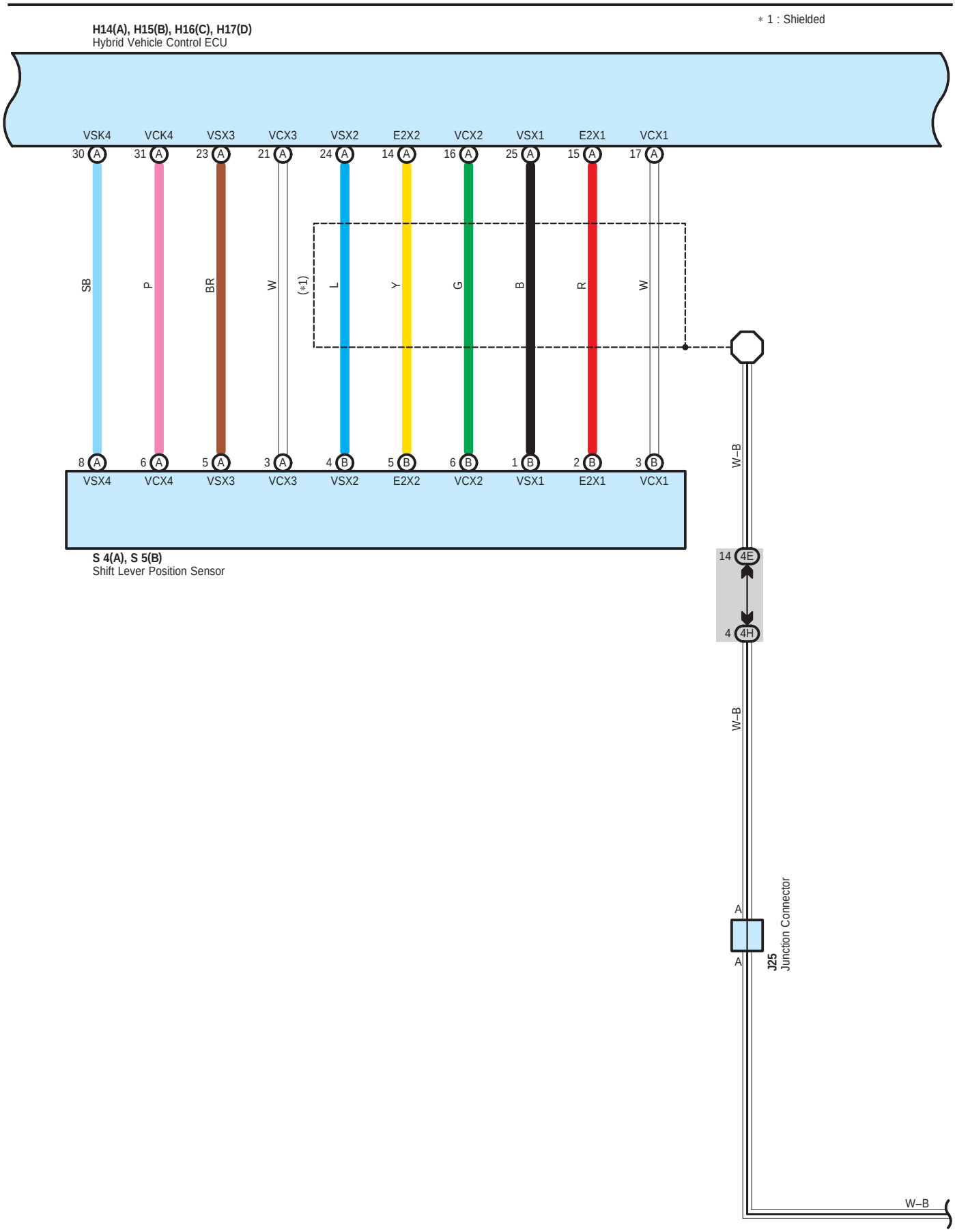

cardiagn.com

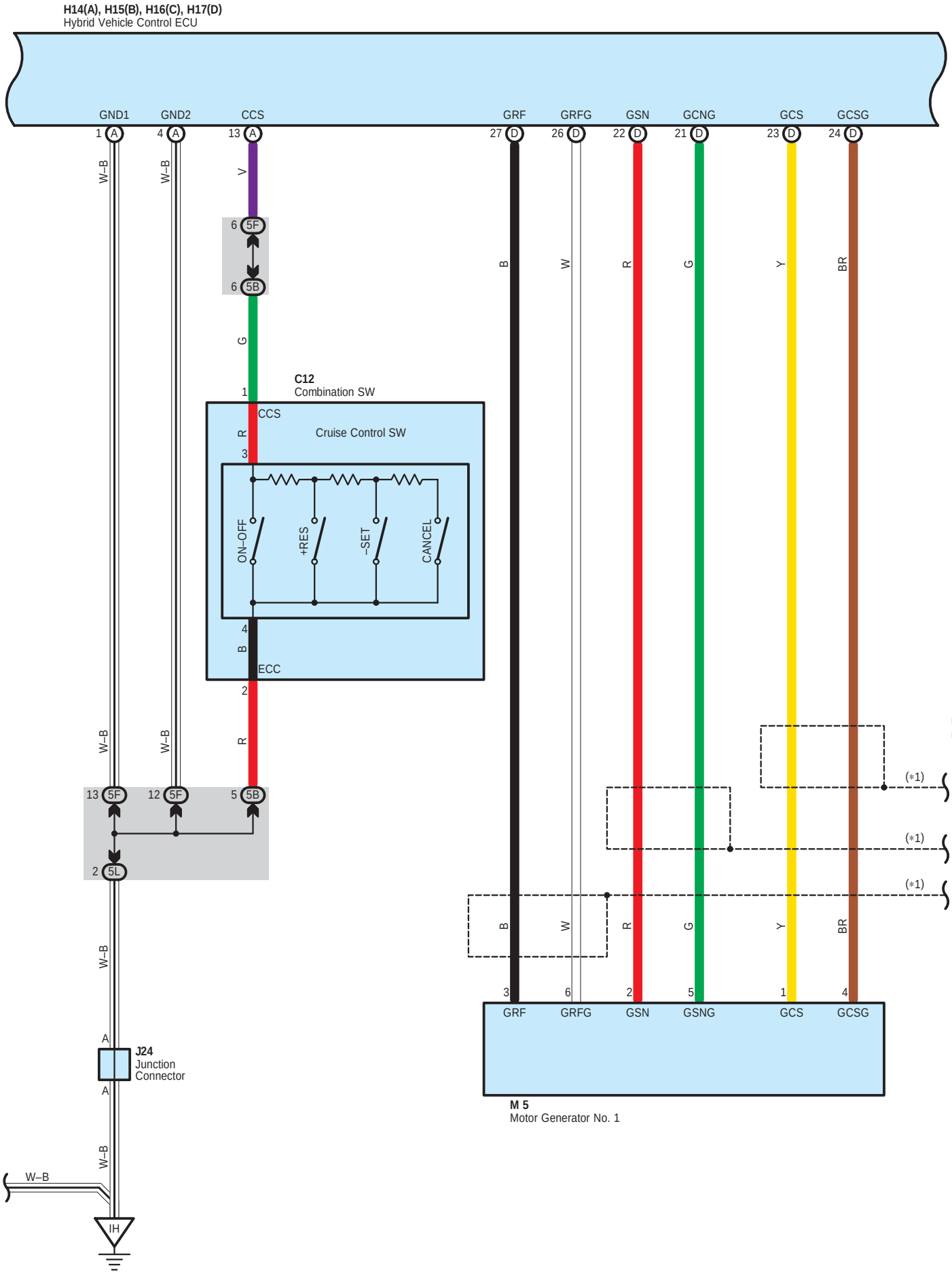

cardiagn.com

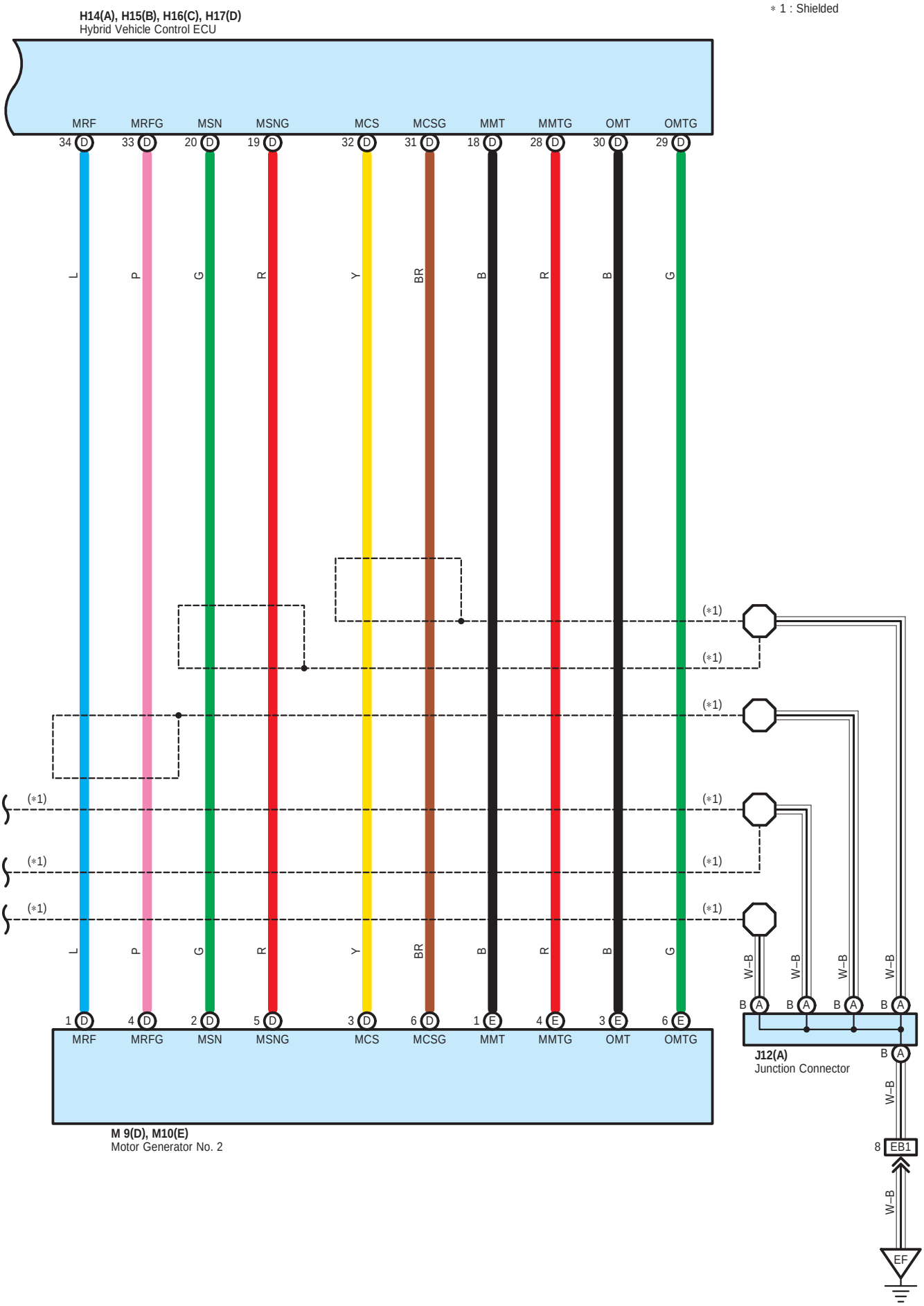

cardiagn.com

System Outline

Cruise control is the speed control device, which can set desired speed by just operating the switch on the control panel without applying the accelerator pedal. The device can be used when driver would like to drive the vehicle at fixed speed.

1. Set Control

If the cruise control switch is pushed to – SET side and hand is released from the switch during driving, (The available range of set speed: between 40 and 200 km/h) with the ON–OFF switch at ON (Power indicator comes on), the device stores vehicle speed at that time and controls it constantly at the set speed.

2. Set Speed Control

The device compares the actual vehicle speed with the set speed, and controls the driving power of the motor and the engine by calculating the cruise control requirements to drive it constantly at the set speed.

3. Coast Control

If the cruise control switch is kept pushed to the – SET side during driving in the cruise control mode, the device recognizes the cruise control requirement is at zero and decelerates the vehicle speed. When hand is released from the cruise control switch, the device stores the vehicle speed while the vehicle speed is decelerating. From then on, vehicle speed is controlled to stay at that speed.
Every time the switch is operated to – SET side momentarily (For about 0.5 seconds), the set speed is decreased by about 1.6 km/h. However, in case of tap–down operation to make more than 5 km/h gap between the set speed and the actual vehicle speed, the device recalls the original set speed and controls it at the speed constantly.

4. Accel Control

If the cruise control switch is kept pushed to the + RES side during driving in the cruise control mode, the device recognizes the cruise control is on the acceleration side and accelerates the vehicle speed. When hand is released from the cruise control switch, the device stores the vehicle speed at that time and controls it with the set speed constantly.
Every time the switch is operated to + RES side momentarily (For about 0.5 seconds), the set speed is increased by about 1.6 km/h. However, in case of tap–up operation to make more than 5 km/h gap between the set speed and the actual vehicle speed, the device does not change the set speed. (Tap–up operation is not available.)

5. Resume Control

After the cruise control mode is cancelled by any one the cancel switches, the mode can be resumed and controlled at the set speed by operating the cruise control switch in the + RES direction providing that the vehicle speed has not dropped below the low speed limit [Approx. 40 km/h (25 mph)].
The mode cannot be resumed if the vehicle speed once drops below the low speed limit, because the speed in the memory is cleared.

6. Manual Cancel Control

If any of the following signals is sent to the device while the vehicle is running in the cruise control, the cruise control is cancelled accordingly.
∗ Stop light switch: ON (Depressing the brake pedal)
∗ CANCEL switch of control switch: ON
∗ ON–OFF switch: OFF

7. Auto Cancel Function

A) The set speed is cleared and the cruise control is canceled under the following conditions. The cruise main indicator blinks until the main switch is turned OFF. The speed control is unavailable unless the main switch is turned ON again.
∗ When the stop light switch open or short–circuits.
∗ When signal of sudden change in the vehicle speed is sent.

B) The set speed is cleared and the cruise control is canceled under the following conditions.
∗ When there is malfunction of the stop light switch input circuit.
∗ When the vehicle speed becomes lower than 40 km/h.
∗ When the vehicle speed becomes lower than the speed that 16 km/h is subtracted from the set speed.

cardiagn.com

: Parts Location

Code		See Page	Code		See Page	Code		See Page
A8		48	J1		47	M10	E	47
B5	A	48	J3		47	P6		51
C2		46	J6		50	S4	A	51
C10		49	J9		50	S5	B	51
C12		49	J12	A	50	S7	A	51
D1		49	J13	B	50	S8	B	51
E4	A	49	J14		50	S9	C	51
E5	B	49	J15		50	S10	D	51
E6	C	49	J16		50	S11		51
E7	D	49	J17		50	S16		51
G1		49	J18		50	T2		47
H14	A	49	J24		50	T3		47
H15	B	49	J25		50	T4		51
H16	C	49	M5		47	T5		51
H17	D	49	M9	D	47	T11		51

: Relay Blocks

Code	See Page	Relay Blocks (Relay Block Location)
3	22	Engine Room R/B (Engine Compartment Left)

: Junction Block and Wire Harness Connector

Code	See Page	Junction Block and Wire Harness (Connector Location)
1A	30	Engine Room Main Wire and Driver Side J/B (Lower Finish Panel)
1F	30	Instrument Panel Wire and Driver Side J/B (Lower Finish Panel)
1G		
1L	31	
1M		
3I	24	Engine Room Main Wire and Engine Room J/B (Engine Compartment Left)
3J		
4C	38	Instrument Panel Wire and Center Connector No.1 (Behind the Combination Meter)
4D		
4E		
4F		
4G		
4H		
4I		
4K		
4L		
5B	42	Instrument Panel Wire and Center Connector No.2 (Instrument Panel Brace RH)
5C		
5D		
5F		
5G		
5H		
5J		
5K		
5L		
5M		

cardiagn.com

: **Connector Joining Wire Harness and Wire Harness**

Code	See Page	Joining Wire Harness and Wire Harness (Connector Location)
EB1	56	Engine Wire and Engine Room Main Wire (Inside of the Engine Room R/B)
IA1	58	Engine Room Main Wire and Instrument Panel Wire (Upper Parts of Front Body Pillar LH)
IA3		
IG1	59	Instrument Panel Wire and Instrument Panel No.2 Wire (Behind the Combination Meter)
IG2		
II1	59	Engine Wire and Instrument Panel Wire (Behind the Glove Box)

: **Ground Points**

Code	See Page	Ground Points Location
EC	56	Engine Block
ED		
EE	56	Left Side of the Suspension Tower
EF		
IH	58	Cowl Side Panel LH
II	58	Instrument Panel Brace LH

cardiagn.com

cardiagn.com

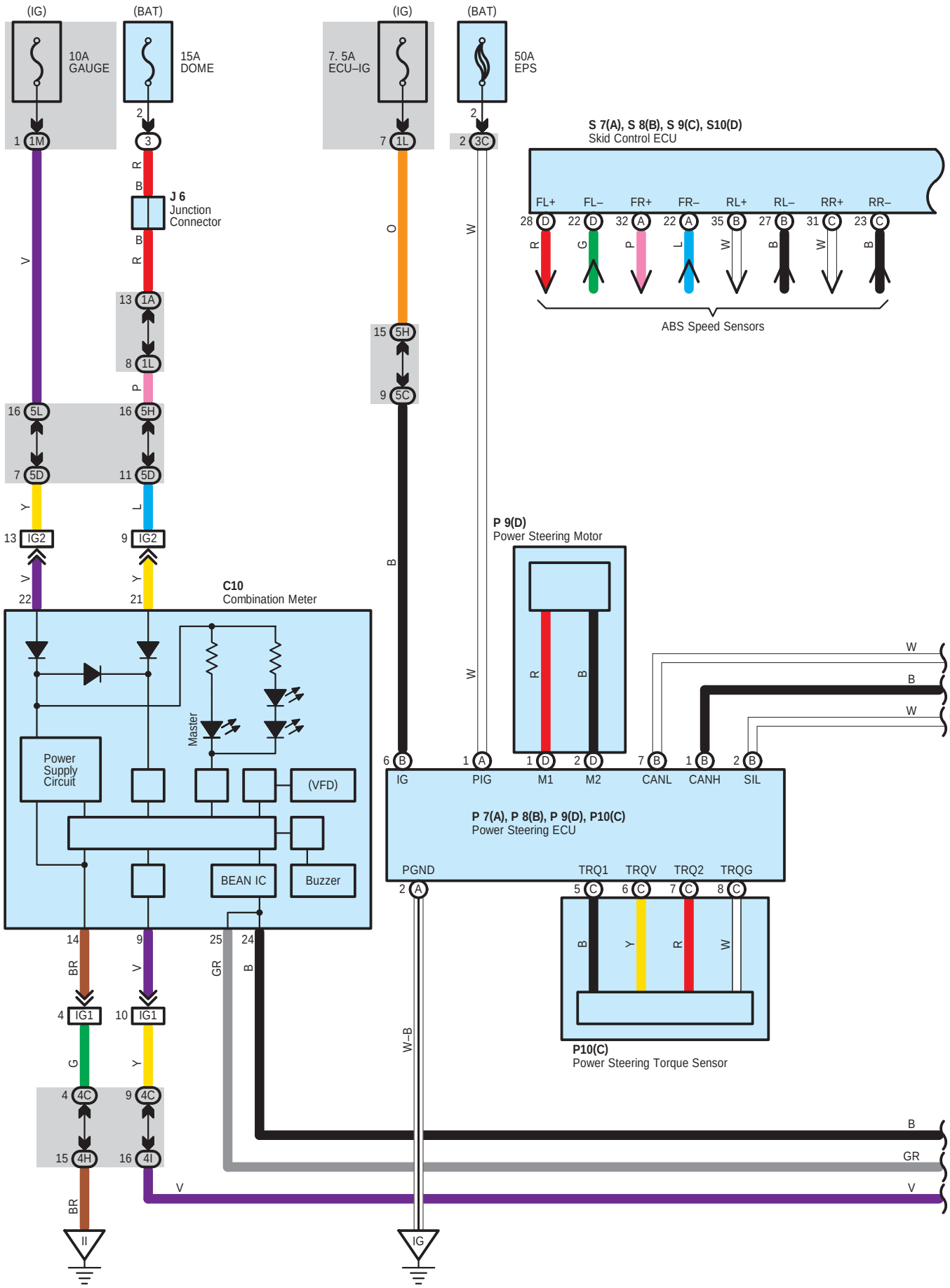

cardiagn.com

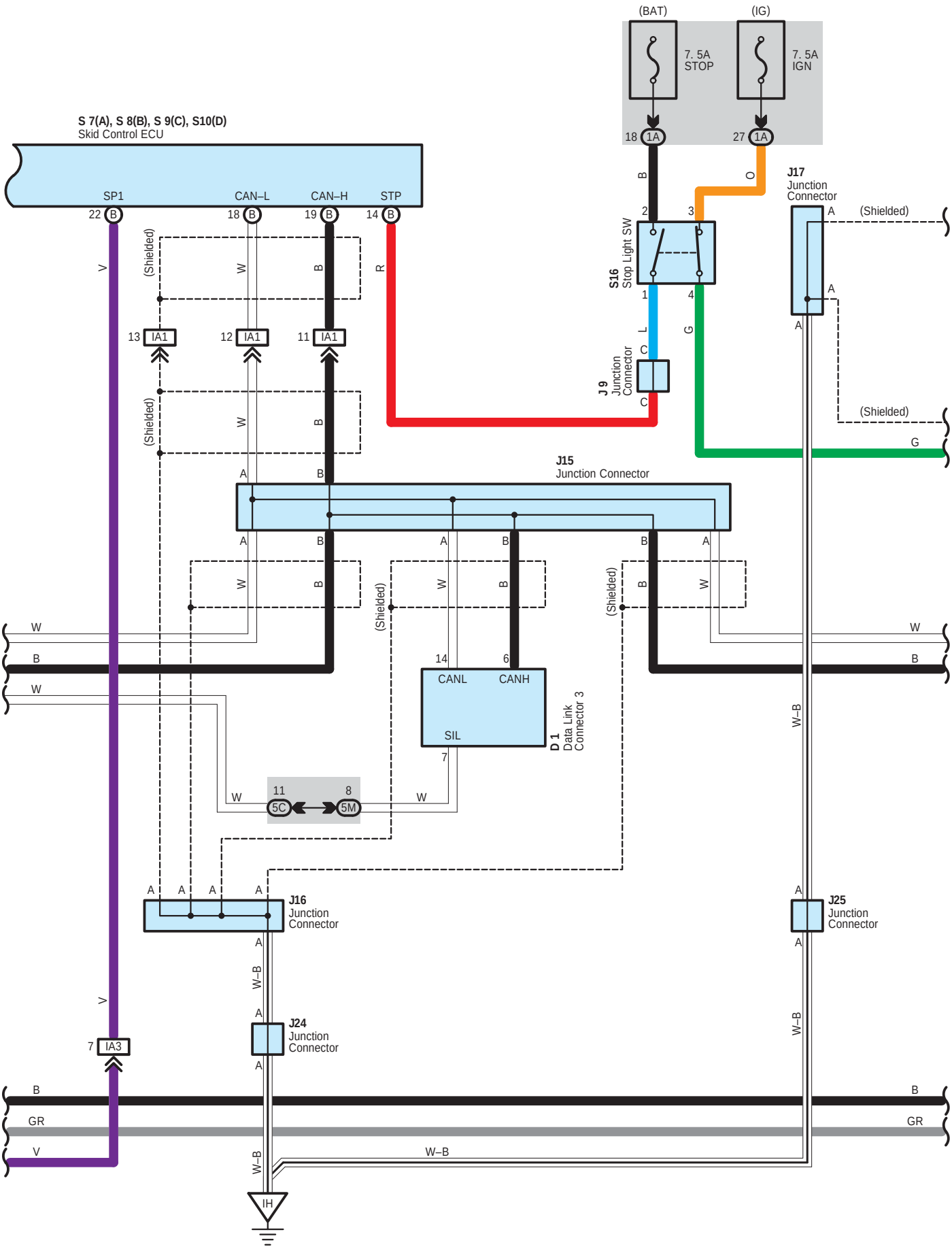

cardiagn.com

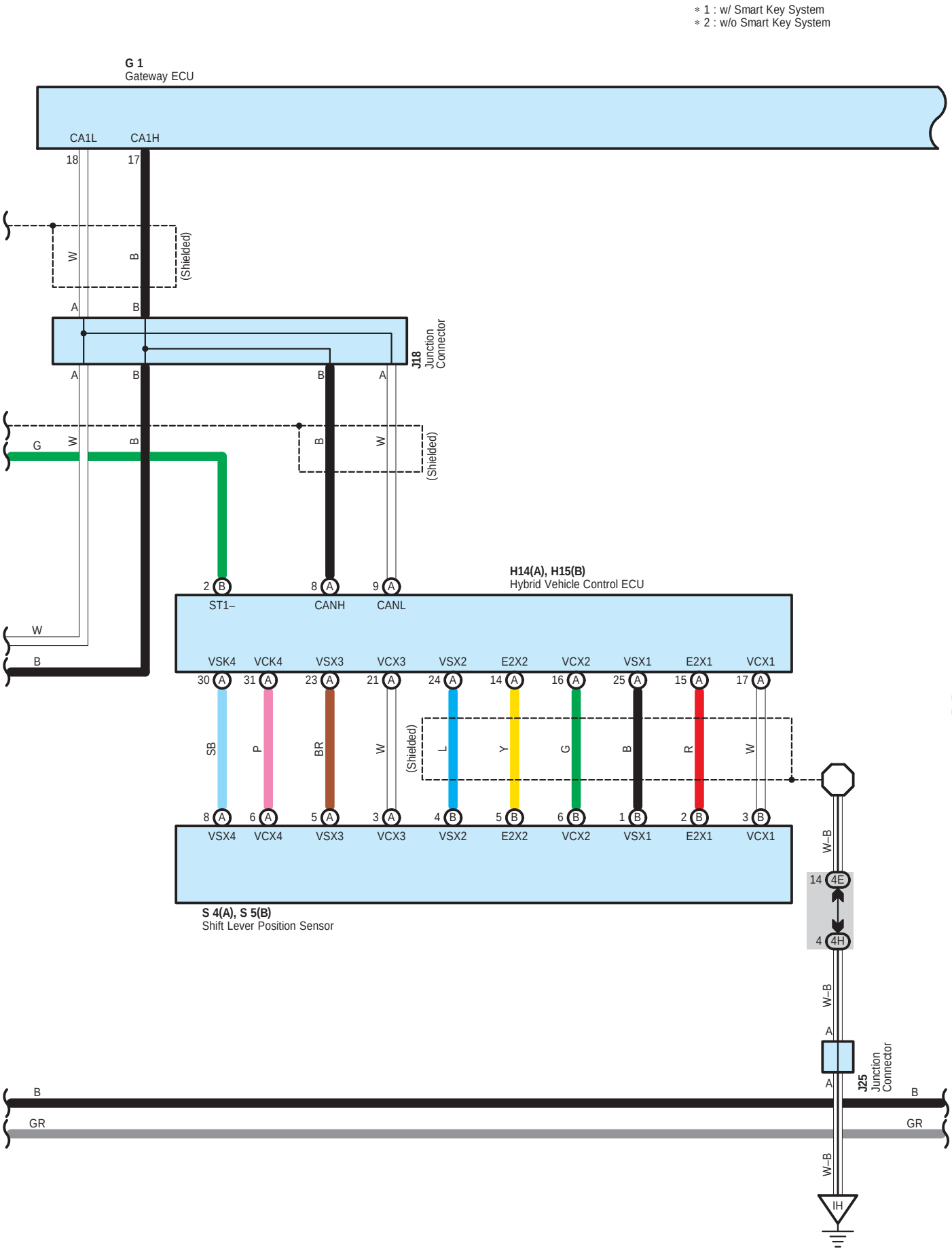

cardiagn.com

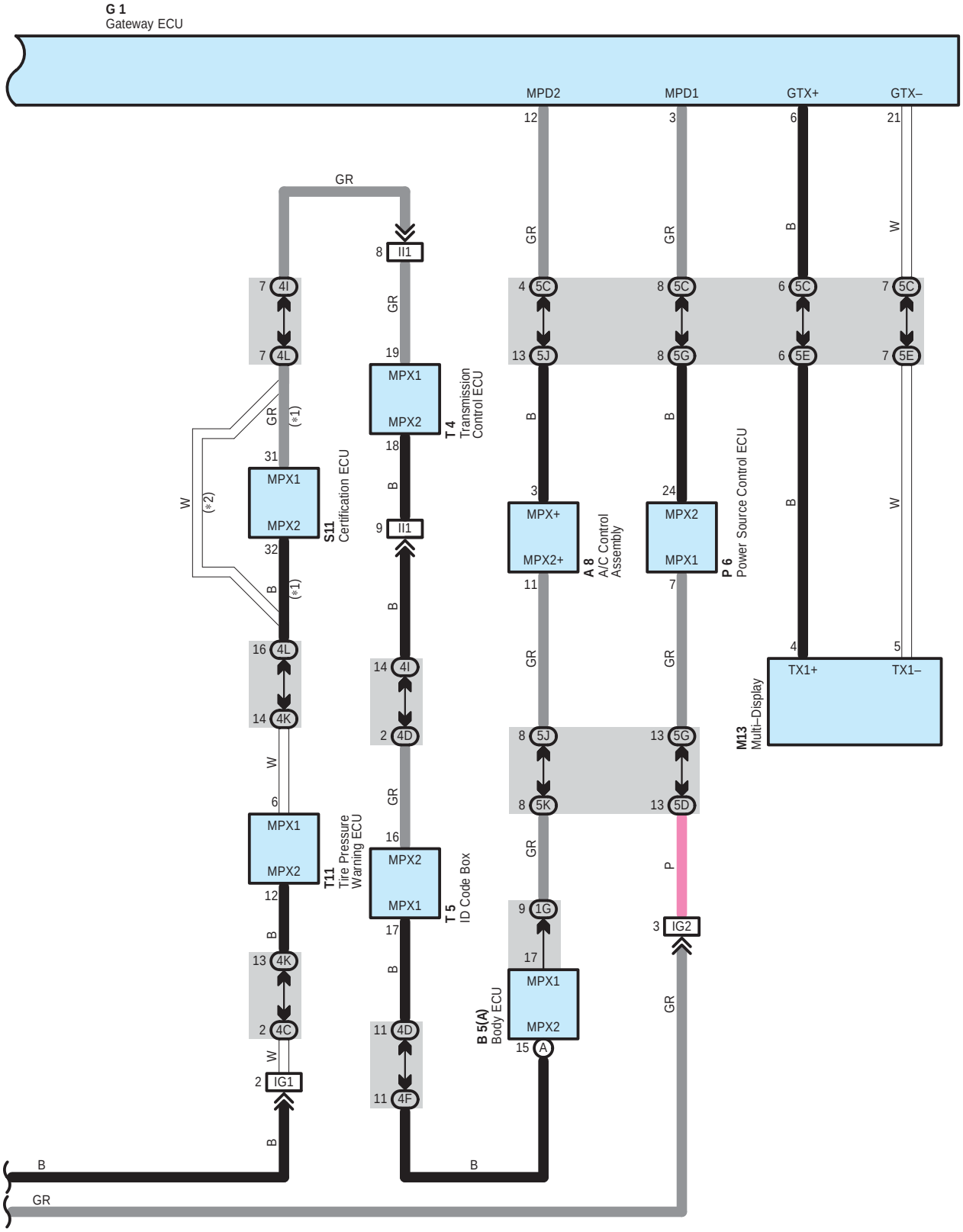

cardiagn.com

System Outline

This is a system to assist the driver to steer the vehicle with easy steering force. Based on torque signal of steering from power steering torque sensor, and vehicle speed and other vehicle information from skid control ECU, power steering ECU calculates assisting current to control power steering motor.
Under the system in abnormality, power source relay and motor relay in power steering ECU is shut down and master warning lamp on combination meter blinks as well as P/S warning is indicated, resulting to stop the assistance.

: Parts Location

Code		See Page	Code		See Page	Code		See Page
A8		48	J17		50	S5	B	51
B5	A	48	J18		50	S7	A	51
C10		49	J24		50	S8	B	51
D1		49	J25		50	S9	C	51
G1		49	M13		50	S10	D	51
H14	A	49	P6		51	S11		51
H15	B	49	P7	A	51	S16		51
J6		50	P8	B	51	T4		51
J9		50	P9	D	51	T5		51
J15		50	P10	C	51	T11		51
J16		50	S4	A	51			

: Relay Blocks

Code	See Page	Relay Blocks (Relay Block Location)
3	22	Engine Room R/B (Engine Compartment Left)

: Junction Block and Wire Harness Connector

Code	See Page	Junction Block and Wire Harness (Connector Location)
1A	30	Engine Room Main Wire and Driver Side J/B (Lower Finish Panel)
1G	30	Instrument Panel Wire and Driver Side J/B (Lower Finish Panel)
1L	31	
1M		
3C	23	Engine Room Main Wire and Engine Room J/B (Engine Compartment Left)
4C	38	Instrument Panel Wire and Center Connector No.1 (Behind the Combination Meter)
4D		
4E		
4F		
4H		
4I		
4K		
4L		
5C	42	Instrument Panel Wire and Center Connector No.2 (Instrument Panel Brace RH)
5D		
5E		
5G		
5H		
5J		
5K		
5L		
5M		

cardiagn.com

: **Connector Joining Wire Harness and Wire Harness**

Code	See Page	Joining Wire Harness and Wire Harness (Connector Location)
IA1	58	Engine Room Main Wire and Instrument Panel Wire (Upper Parts of Front Body Pillar LH)
IA3		
IG1	59	Instrument Panel Wire and Instrument Panel No.2 Wire (Behind the Combination Meter)
IG2		
II1	59	Engine Wire and Instrument Panel Wire (Behind the Glove Box)

: **Ground Points**

Code	See Page	Ground Points Location
IG	58	Cowl Side Panel LH
IH		
II	58	Instrument Panel Brace LH

cardiagn.com

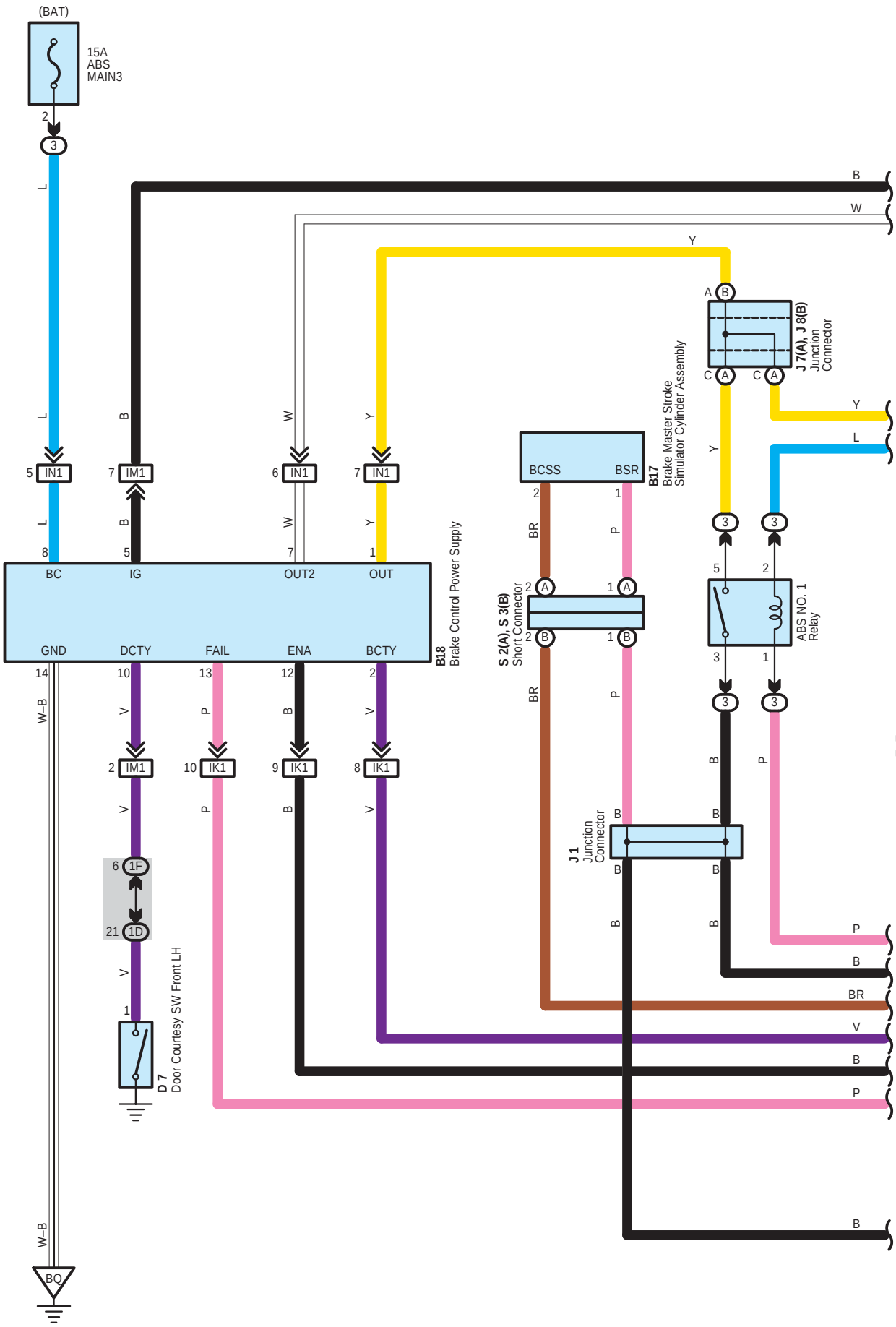

cardiagn.com

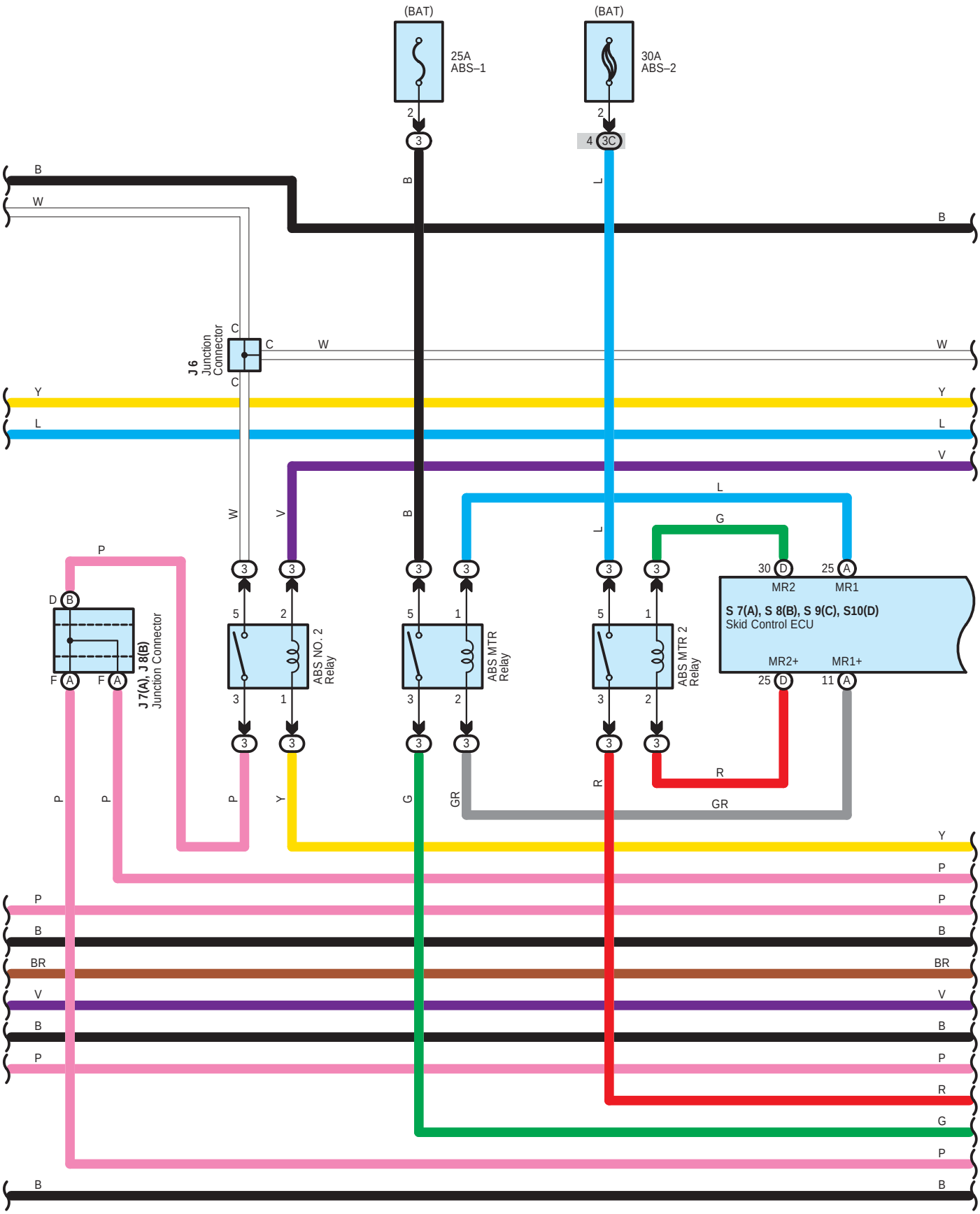

cardiagn.com

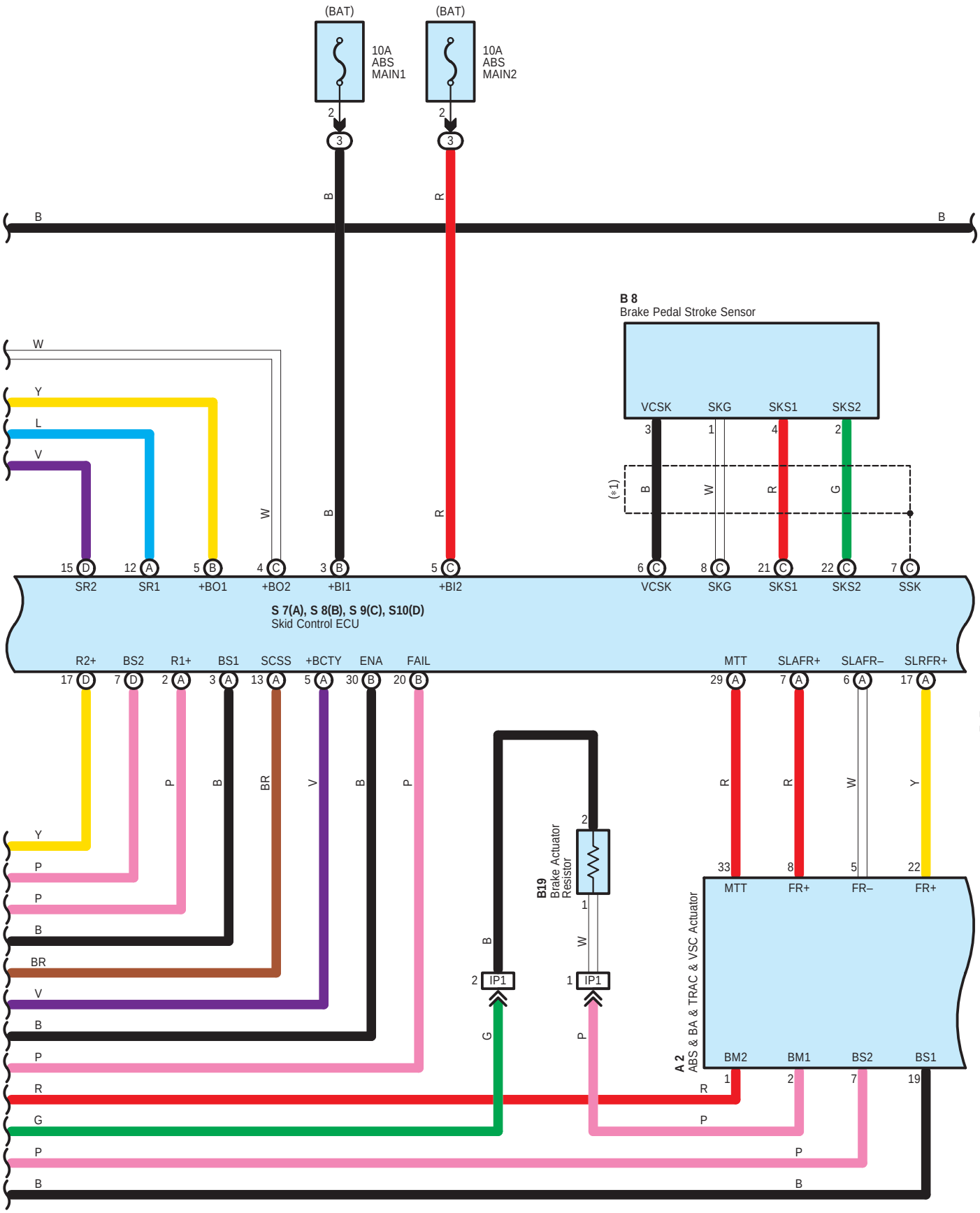

cardiagn.com

∗ 1 : Shielded

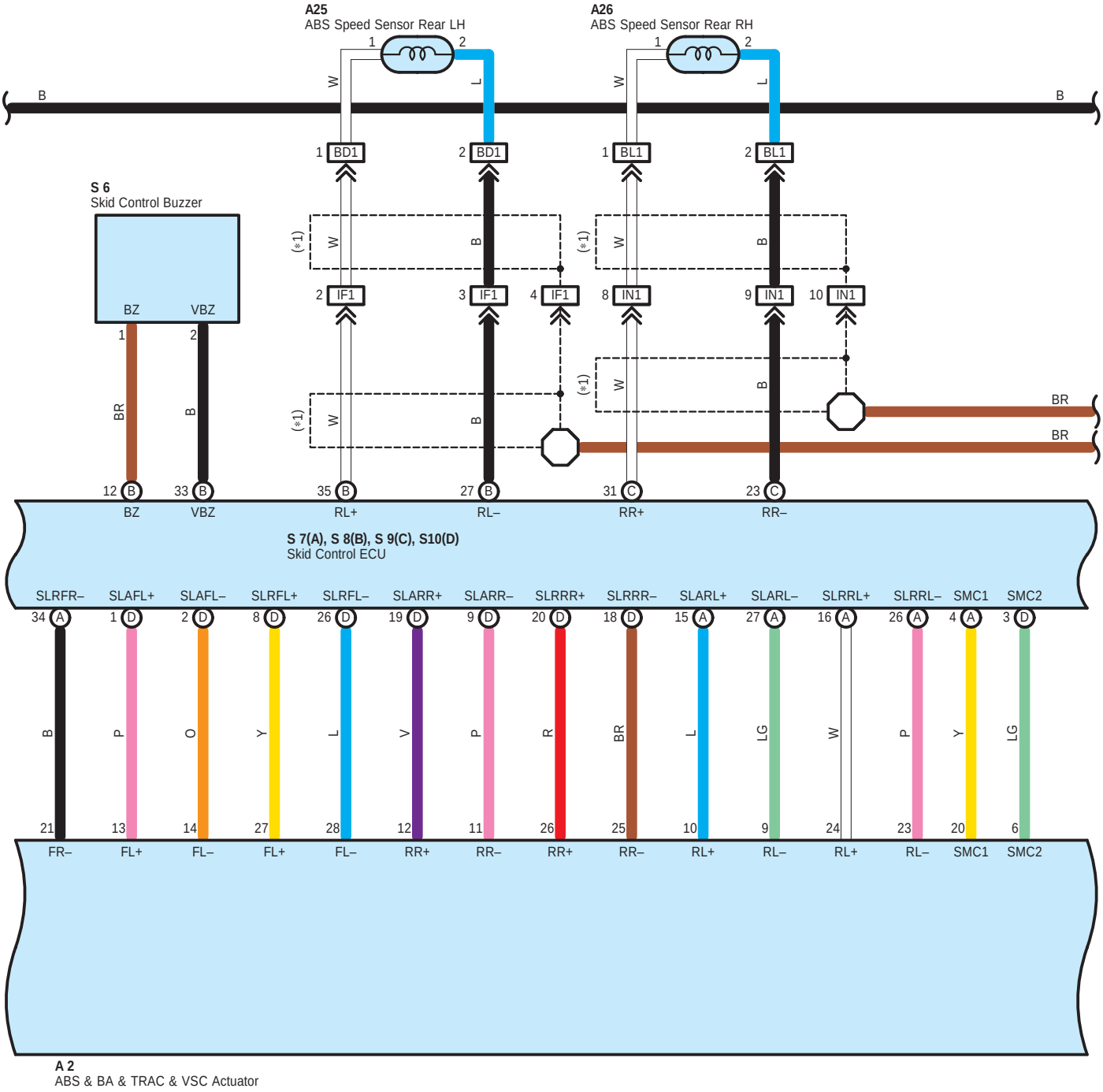

cardiagn.com

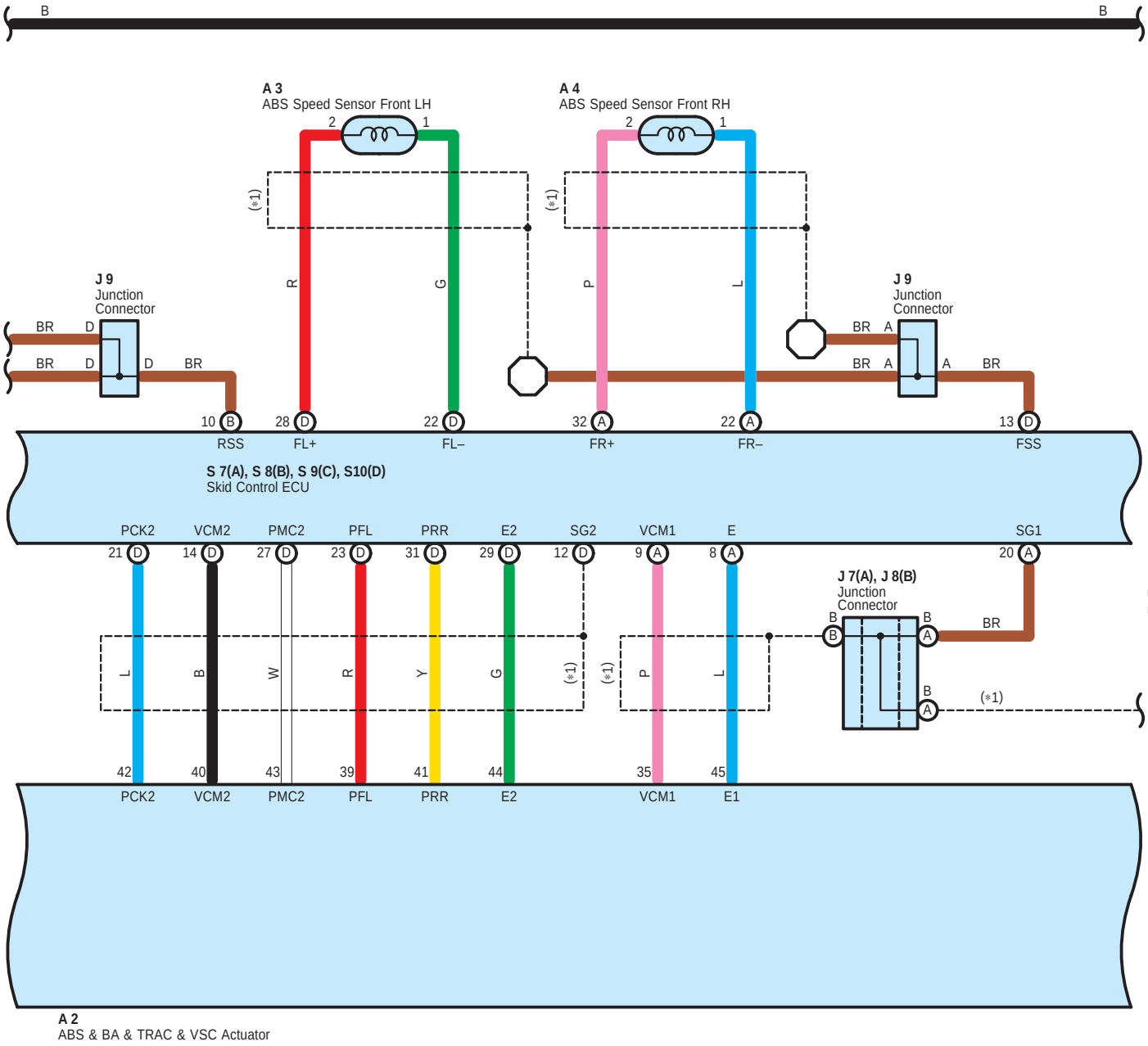

A 2
ABS & BA & TRAC & VSC Actuator

cardiagn.com

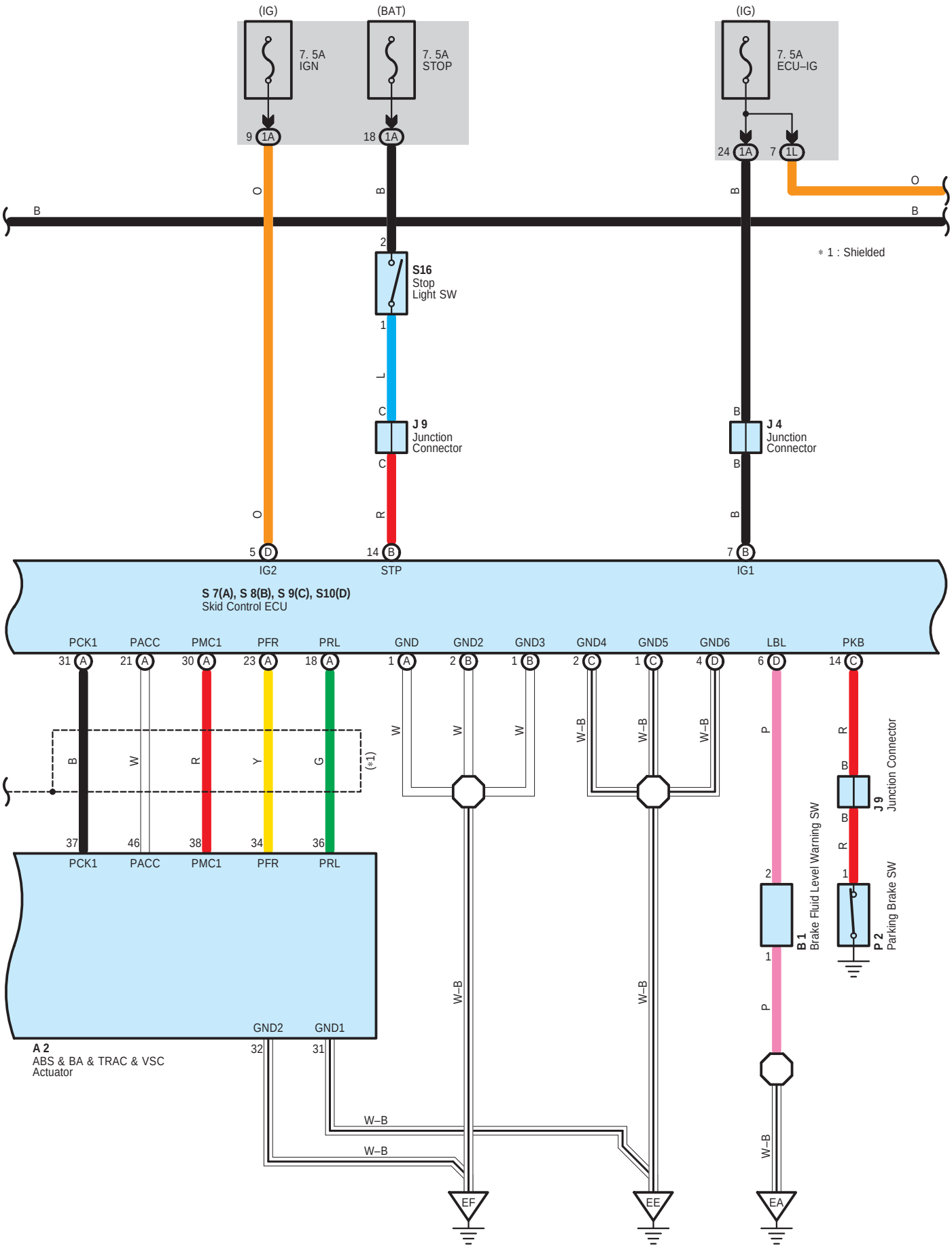

cardiagn.com

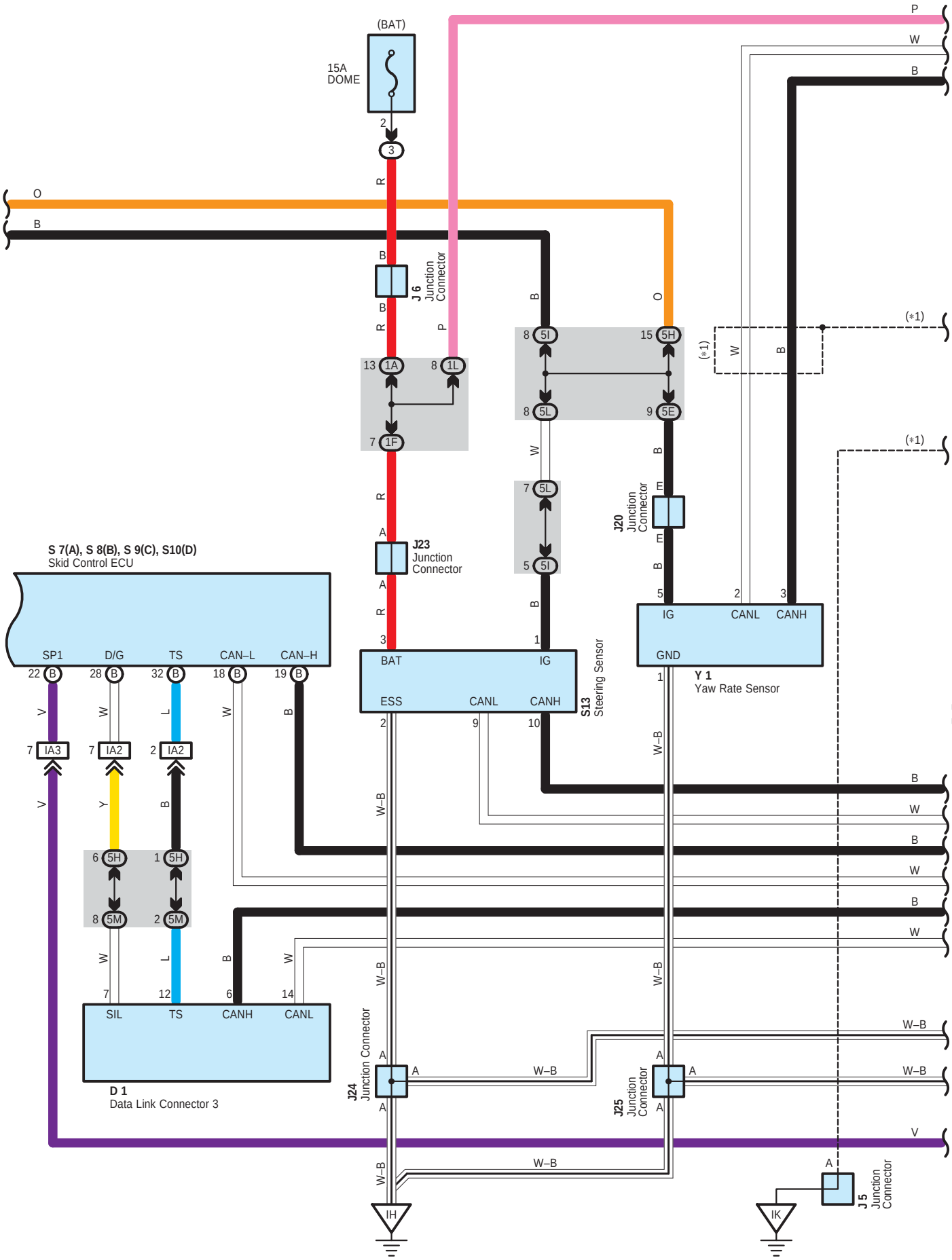

cardiagn.com

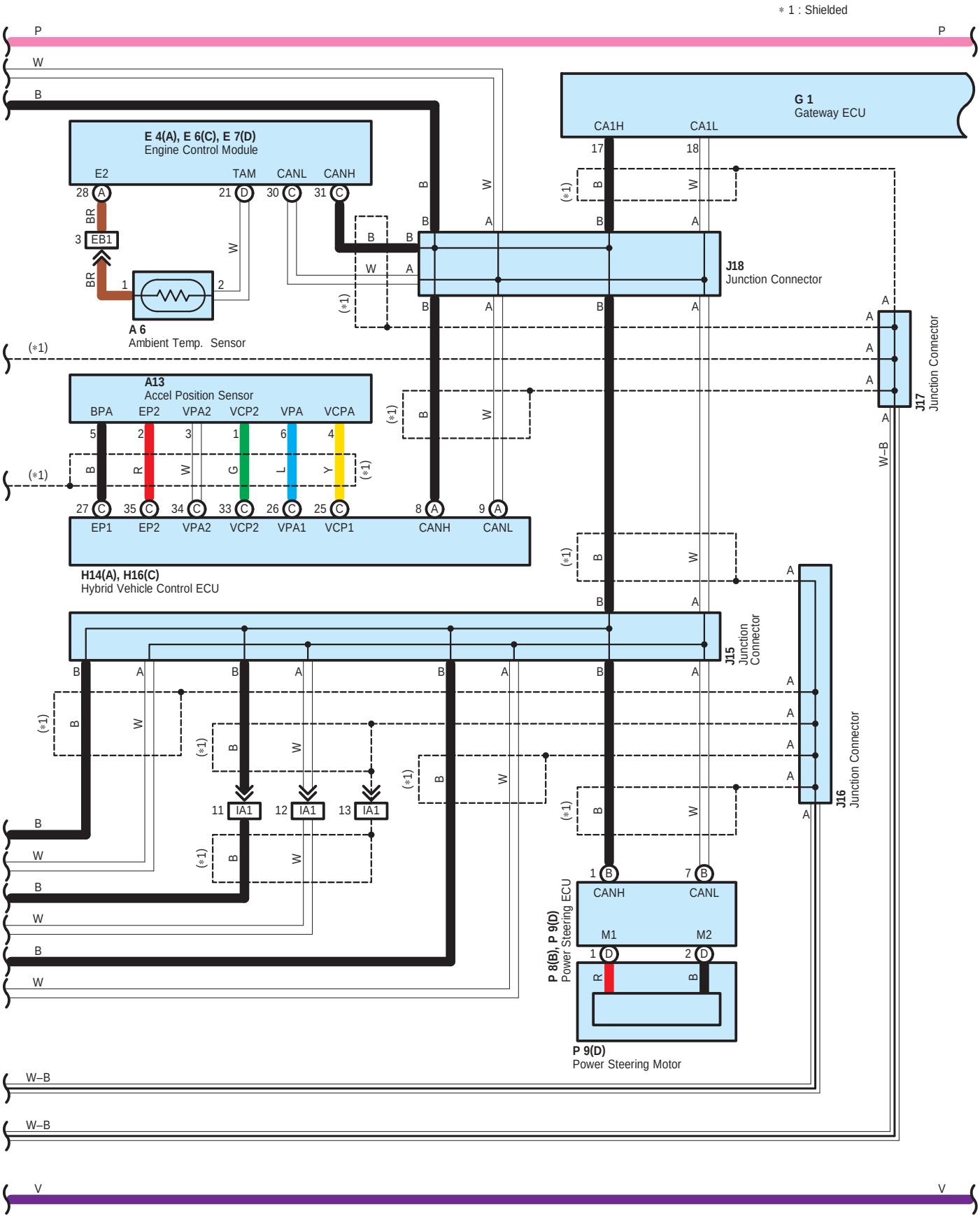

cardiagn.com

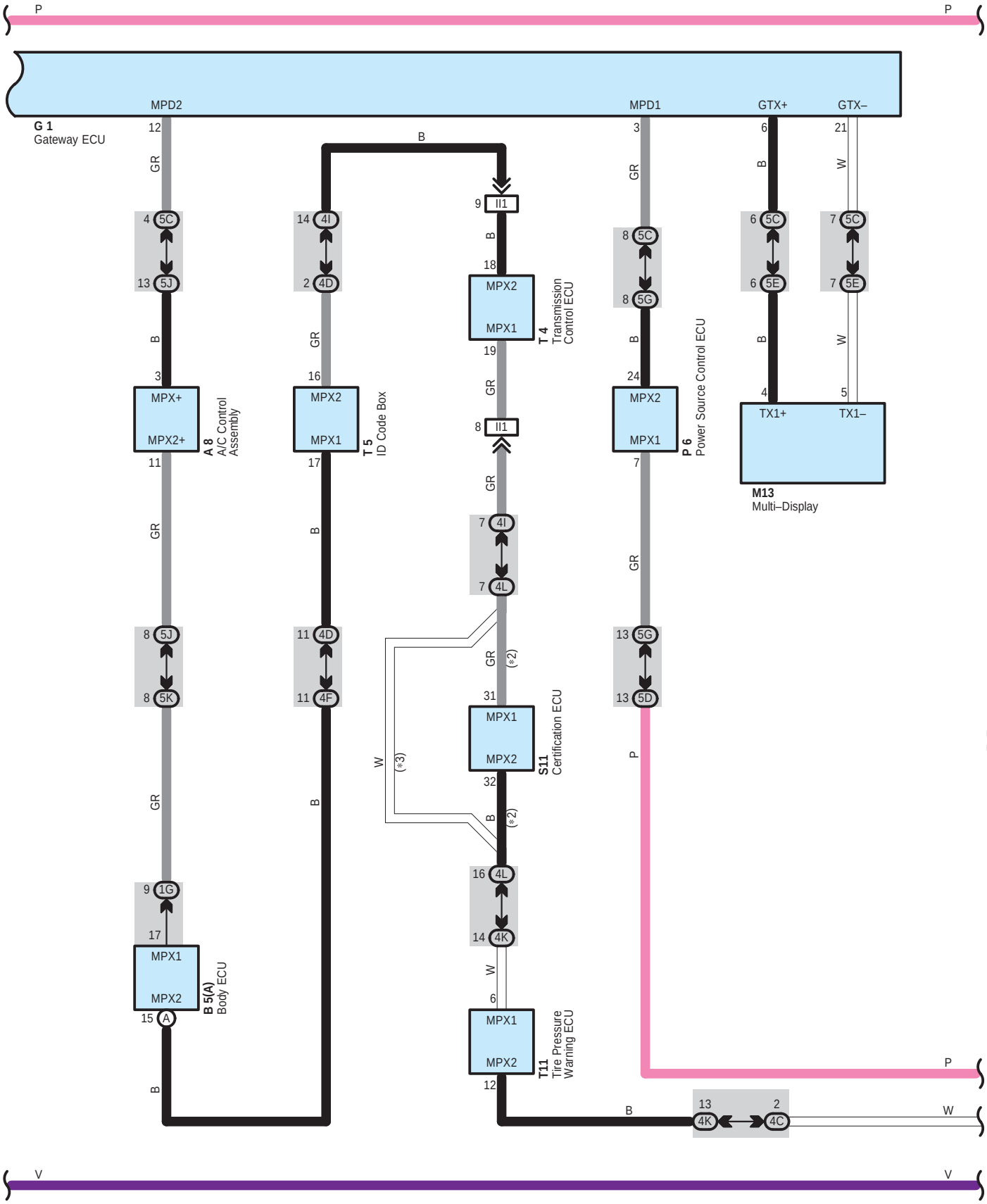

cardiagn.com

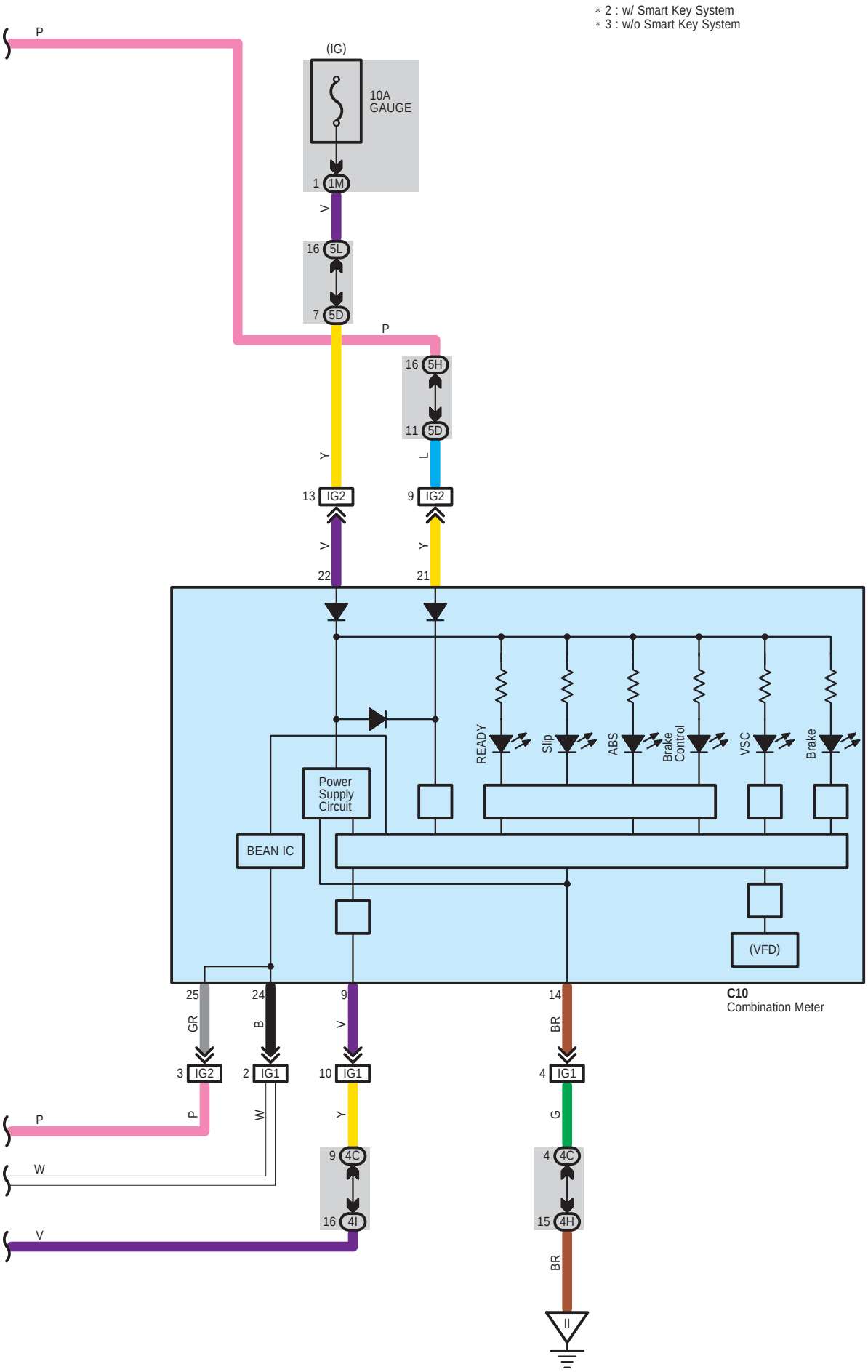

cardiagn.com

System Outline

1. ABS Operation

If the brake pedal is depressed suddenly, the ABS controls the hydraulic pressure of all the four wheel cylinders to automatically avoid wheel locking and to ensure the directional and steering stability of the vehicle. Under the situation, the skid control ECU controls the solenoids in the actuators, using the signals from the sensors to move the brake fluid to the reservoir in order to release the braking pressure applied to the wheel cylinder. If the skid control ECU detects that the fluid pressure in the wheel cylinder is insufficient, the ECU controls the solenoids in the actuators to increase the braking pressure.

2. Electronic Brake–Force Distribution

Skid control ECU distributes appropriate brake–force to front and rear wheels (Control of brake–force distribution to front and rear wheels) corresponding to the vehicle driving conditions. It also makes effective use of rear wheel brake–force to match loading condition and decelerating of the vehicle, resulting to reduce depressing of brake pedal and to ensure effective braking. In braking during making a turn, the ECU controls appropriate brake–force distribution to right and left wheels (Control of brake–force distribution to right and left wheels) to ensure stability and braking of the vehicle.

3. Brake Assist System

Skid control ECU recognizes emergency braking from detecting applying speed of brake pedal and brake travel, and controls braking effectiveness to supply strong brake–force for the emergency braking.

4. VSC Operation (w/ VSC)

Unexpected road conditions, emergency situation, and any other external factors may cause large under– or over–steering of the vehicle. If they occur, the VSC system automatically controls the driving power and wheel brakes to reduce the under– or over–steering.

To reduce large over–steering :

If the VSC system determines that the over–steering is large, it activates the brakes for the outer turning wheels depending on the degree of the over–steering to produce the moment toward the outside of the vehicle and reduce the over–steering.

To reduce large under–steering :

If the VSC system determines that the under–steering is large, it controls the driving power and activates the front wheel brakes and rear inner side wheel brake to reduce the under–steering.

If there is malfunction in the VSC system, the VSC indicator lights up to warn the driver.

5. Mutual System Control

Due to cooperative control with hybrid vehicle control ECU, skid control ECU controls hydraulic brake to collect much electrical energy by making the most use of regenerative brake.

Skid control ECU also improves stability of the vehicle, performing cooperative control with power steering ECU to give steering torque assistance, corresponding to driving conditions. (w/ VSC)

6. Electric Source Backup Function

Electric charge is stored in brake control power supply. If voltage of vehicle electricity is declined, electric charge is released to cover electric supply to the system.

7. Fail Safe Function

Skid control ECU monitors the system component parts electrically. In case there is abnormality in ECU, sensor signal and actuator, normal parts except parts with abnormality continue braking operation.

Even in case braking is shut off due to malfunction of oil pressure source, braking is secured as master cylinder pressure made by manpower works on wheel cylinder.

In case only regenerative brake is not effective due to abnormality in communication with hybrid vehicle control ECU, control will be changed to have oil pressure brake generate all the braking force

cardiagn.com

○ : Parts Location

Code	See Page	Code	See Page	Code	See Page
A2	46	E7 D	49	M13	50
A3	46	G1	49	P2	51
A4	46	H14 A	49	P6	51
A6	46	H16 C	49	P8 B	51
A8	48	J1	47	P9 D	51
A13	48	J4	47	S2 A	47
A25	52	J5	50	S3 B	47
A26	52	J6	50	S6	51
B1	46	J7 A	50	S7 A	51
B5 A	48	J8 B	50	S8 B	51
B8	48	J9	50	S9 C	51
B17	46	J15	50	S10 D	51
B18	52	J16	50	S11	51
B19	48	J17	50	S13	51
C10	49	J18	50	S16	51
D1	49	J20	50	T4	51
D7	52	J23	50	T5	51
E4 A	49	J24	50	T11	51
E6 C	49	J25	50	Y1	51

: Relay Blocks

Code	See Page	Relay Blocks (Relay Block Location)
3	22	Engine Room R/B (Engine Compartment Left)

: Junction Block and Wire Harness Connector

Code	See Page	Junction Block and Wire Harness (Connector Location)
1A	30	Engine Room Main Wire and Driver Side J/B (Lower Finish Panel)
1D	30	Floor Wire and Driver Side J/B (Lower Finish Panel)
1F	30	Instrument Panel Wire and Driver Side J/B (Lower Finish Panel)
1G		
1L	31	
1M		
3C	23	Engine Room Main Wire and Engine Room J/B (Engine Compartment Left)
4C	38	Instrument Panel Wire and Center Connector No.1 (Behind the Combination Meter)
4D		
4F		
4H		
4I		
4K		
4L		
5C	42	Instrument Panel Wire and Center Connector No.2 (Instrument Panel Brace RH)
5D		
5E		
5G		
5H		
5I		
5J		
5K		
5L		
5M		

cardiagn.com

: **Connector Joining Wire Harness and Wire Harness**

Code	See Page	Joining Wire Harness and Wire Harness (Connector Location)
EB1	56	Engine Wire and Engine Room Main Wire (Inside of the Engine Room R/B)
IA1	58	Engine Room Main Wire and Instrument Panel Wire (Upper Parts of Front Body Pillar LH)
IA2		
IA3		
IF1	58	Floor Wire and Engine Room Main Wire (Left Kick Panel)
IG1	59	Instrument Panel Wire and Instrument Panel No.2 Wire (Behind the Combination Meter)
IG2		
II1	59	Engine Wire and Instrument Panel Wire (Behind the Glove Box)
IK1	59	Engine Room Main Wire and Floor No.2 Wire (Cowl Side Panel RH)
IM1	59	Instrument Panel Wire and Floor No.2 Wire (Right Kick Panel)
IN1	59	Floor No.2 Wire and Engine Room Main Wire (Right Kick Panel)
IP1	59	Engine Room No.2 Wire and Engine Room Main Wire (Upper Parts of Front Body Pillar LH)
BD1	60	Skid Control Sensor No.1 Wire and Floor Wire (Front Side of Left Quarter Panel)
BL1	61	Skid Control Sensor No.2 Wire and Floor No.2 Wire (Front Side of Right Quarter Panel)

: **Ground Points**

Code	See Page	Ground Points Location
EA	56	Right Side of the Fender Apron
EE	56	Left Side of the Suspension Tower
EF		
IH	58	Cowl Side Panel LH
II	58	Instrument Panel Brace LH
IK	58	Cowl Side Panel RH
BQ	60	Rear Side of Right Quarter Panel

cardiagn.com

cardiagn.com

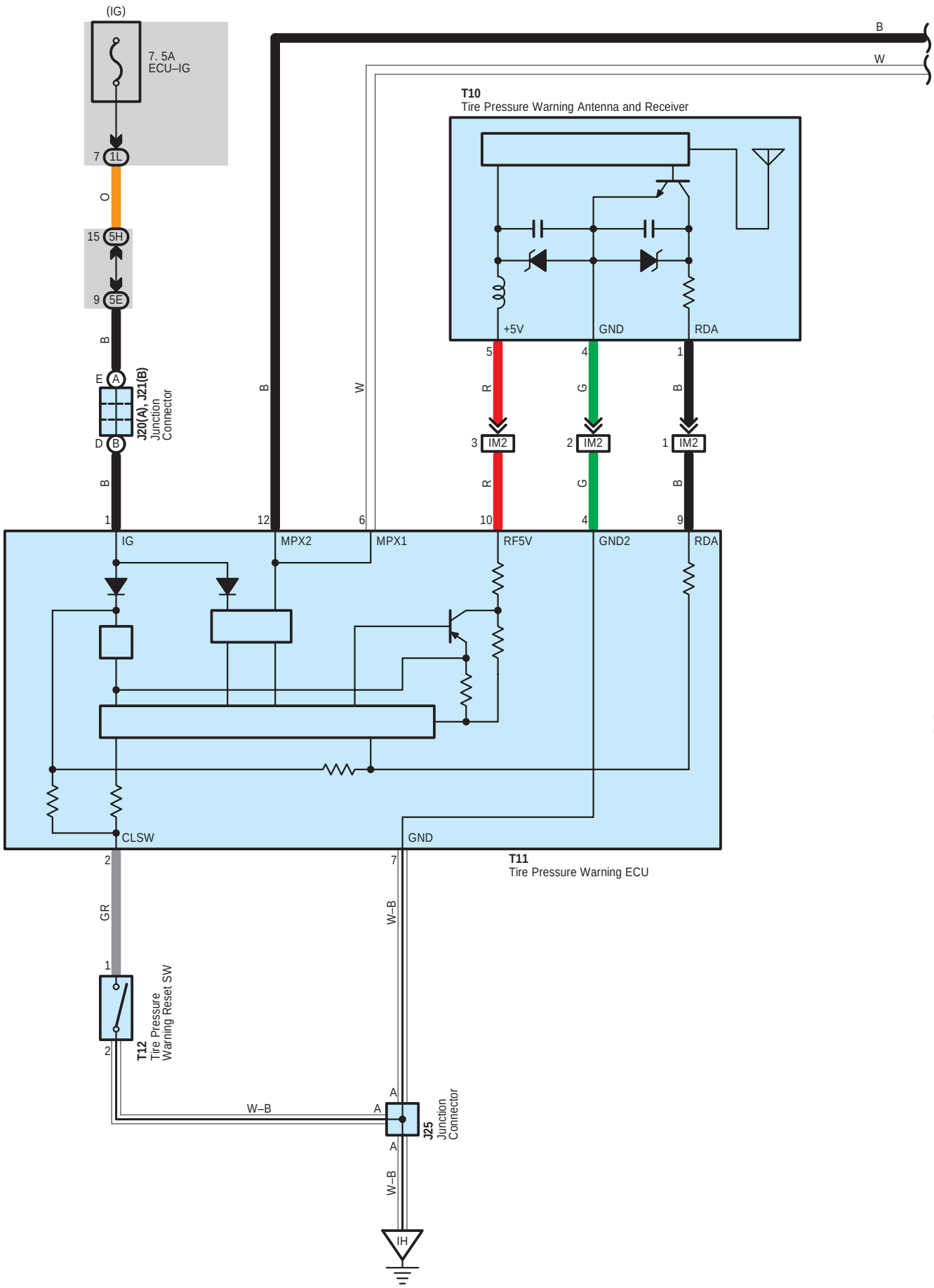

cardiagn.com

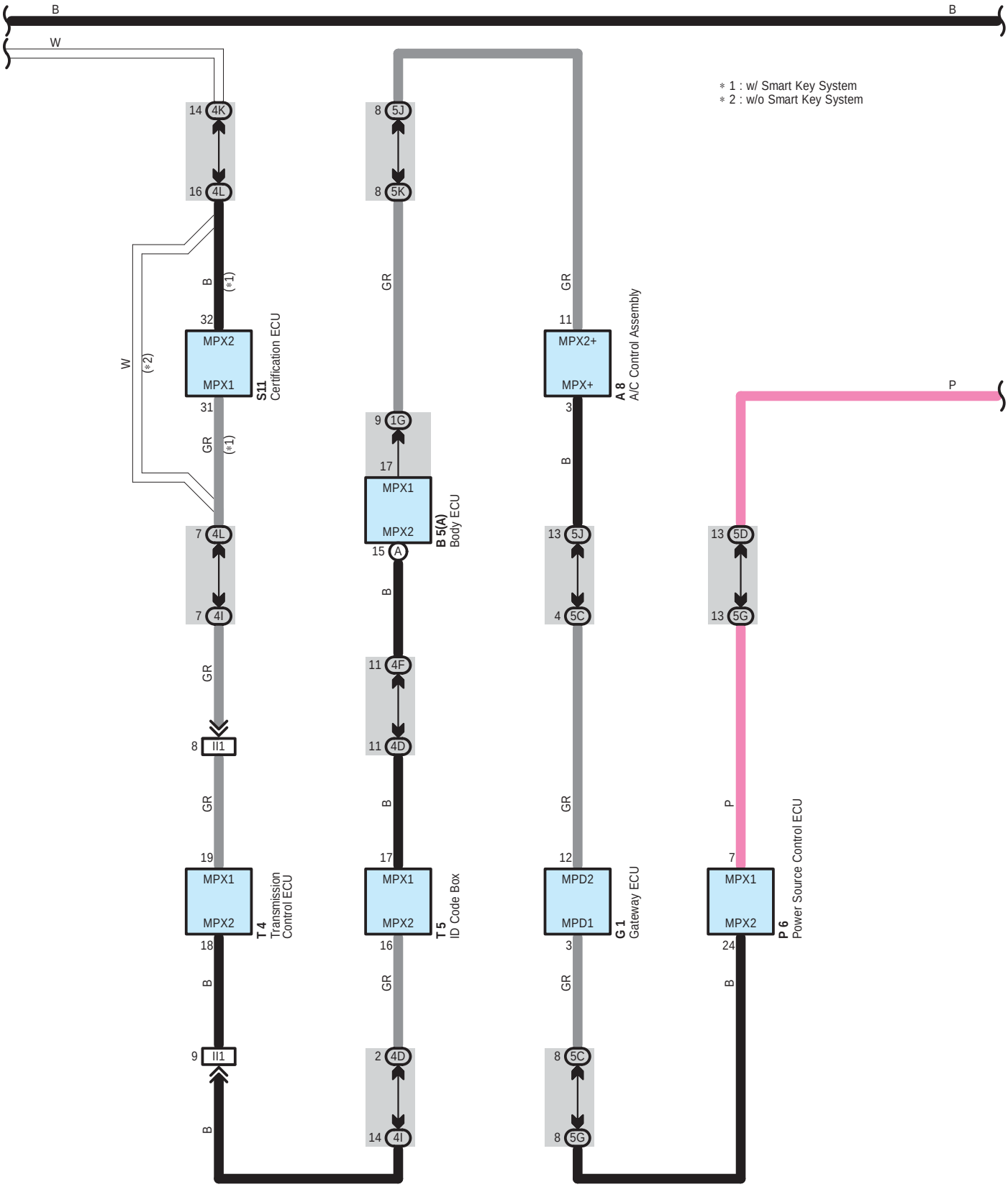

cardiagn.com

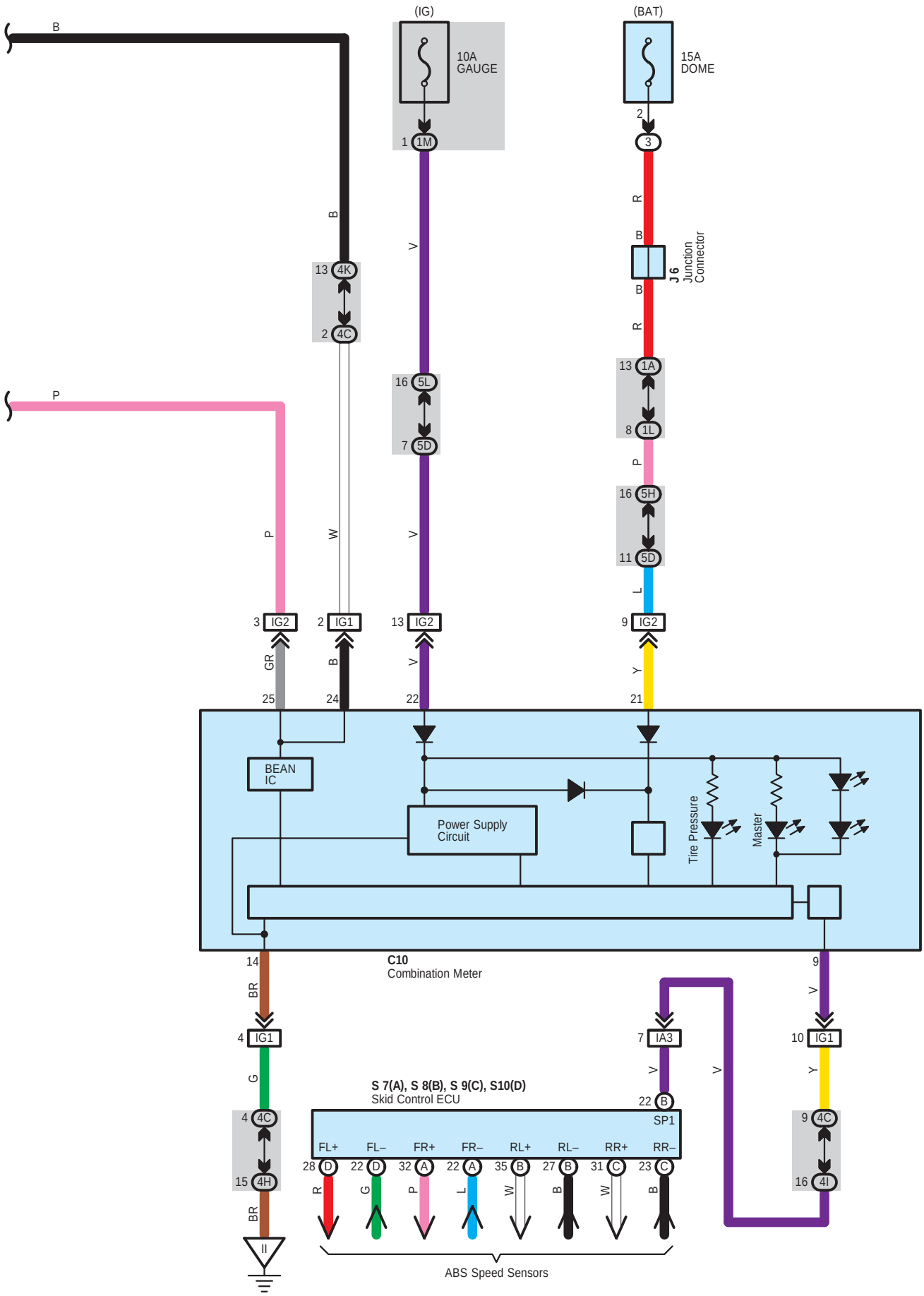

cardiagn.com

System Outline

* In the tire pressure warning system, the warning light illuminates to alert the driver about the low tire pressure when the vehicle continues driving with one of the four tires under such low pressure to cause possible driving disturbance.
* The air pressure sensors installed in the wheels measure air pressure in the tires directly.

: Parts Location

Code		See Page	Code		See Page	Code	See Page
A8		48	J25		50	T4	51
B5	A	48	P6		51	T5	51
C10		49	S7	A	51	T10	55
G1		49	S8	B	51	T11	51
J6		50	S9	C	51	T12	51
J20	A	50	S10	D	51		
J21	B	50	S11		51		

: Relay Blocks

Code	See Page	Relay Blocks (Relay Block Location)
3	22	Engine Room R/B (Engine Compartment Left)

: Junction Block and Wire Harness Connector

Code	See Page	Junction Block and Wire Harness (Connector Location)
1A	30	Engine Room Main Wire and Driver Side J/B (Lower Finish Panel)
1G	30	Instrument Panel Wire and Driver Side J/B (Lower Finish Panel)
1L	31	
1M		
4C	38	Instrument Panel Wire and Center Connector No.1 (Behind the Combination Meter)
4D		
4F		
4H		
4I		
4K		
4L		
5C	42	Instrument Panel Wire and Center Connector No.2 (Instrument Panel Brace RH)
5D		
5E		
5G		
5H		
5J		
5K		
5L		

: Connector Joining Wire Harness and Wire Harness

Code	See Page	Joining Wire Harness and Wire Harness (Connector Location)
IA3	58	Engine Room Main Wire and Instrument Panel Wire (Upper Parts of Front Body Pillar LH)
IG1	59	Instrument Panel Wire and Instrument Panel No.2 Wire (Behind the Combination Meter)
IG2		
II1	59	Engine Wire and Instrument Panel Wire (Behind the Glove Box)
IM2	59	Instrument Panel Wire and Floor No.2 Wire (Right Kick Panel)

: Ground Points

Code	See Page	Ground Points Location
IH	58	Cowl Side Panel LH
II	58	Instrument Panel Brace LH

cardiagn.com

cardiagn.com

NOTICE: When inspecting or repairing the SRS, perform service in accordance with the following precautionary instructions and the procedure, and precautions in the Repair Manual applicable for the model year.

- Malfunction symptoms of the SRS are difficult to confirm, so the DTCs become the most important source of information when troubleshooting. When troubleshooting the SRS, always inspect the DTCs before disconnecting the battery.
- **Work must be started more than 90 seconds after the power SW is pushed to the ”OFF” position and the negative (–) terminal cable is disconnected from the battery.**
  (The SRS is equipped with a back–up power source so that if work is started within 90 seconds from disconnecting the negative (–) terminal cable of the battery, the SRS may deploy.)
- When the negative (–) terminal cable is disconnected from the battery, the memory of the clock and audio system will be cleared. So before starting work, make a record of the contents in the audio memory system. When work is finished, reset the audio systems as they were before and adjust the clock. Some vehicles have power tilt steering, power telescopic steering, power seat and power outside rear view mirror which are all equipped with memory function. However, it is not possible to make a record of these memory contents. So when the work is finished, it will be necessary to explain it to your customer, and ask the customer to adjust the features and reset the memory. To avoid erasing the memory in each system, never use a back–up power supply from outside the vehicle.
- Before repair, remove the airbag sensor if shocks are likely to be applied to the sensor during repair.
- Do not expose the following parts directly to hot air or flame;
- Even in cases of a minor collision where the SRS does not deploy, the following parts should be inspected;
- Never use SRS parts from another vehicle. When replacing parts, replace with new parts.
- For the purpose of reuse, never disassemble and repair the following parts.
- If the following parts have been dropped, or have cracks, dents and other defects in their case, bracket, and connector, replace with new one.
- Use a volt/ohmmeter with high impedance (10 kΩ/V minimum) for troubleshooting electrical circuits of the system.
- Information labels are attached to the periphery of the SRS components. Follow the instructions of the notice.
- After work on the SRS is completed, check the SRS warning light.
- If the vehicle is equipped with a mobile communication system, refer to the precaution in the IN section of the Repair Manual.

* Steering wheel pad
* Front passenger airbag assembly
* Side airbag assembly
* Curtain shield airbag assembly
* Seat belt pretensioner
* Center airbag sensor assembly
* Front airbag sensor assembly
* Side airbag sensor assembly
* Rear airbag sensor assembly

cardiagn.com

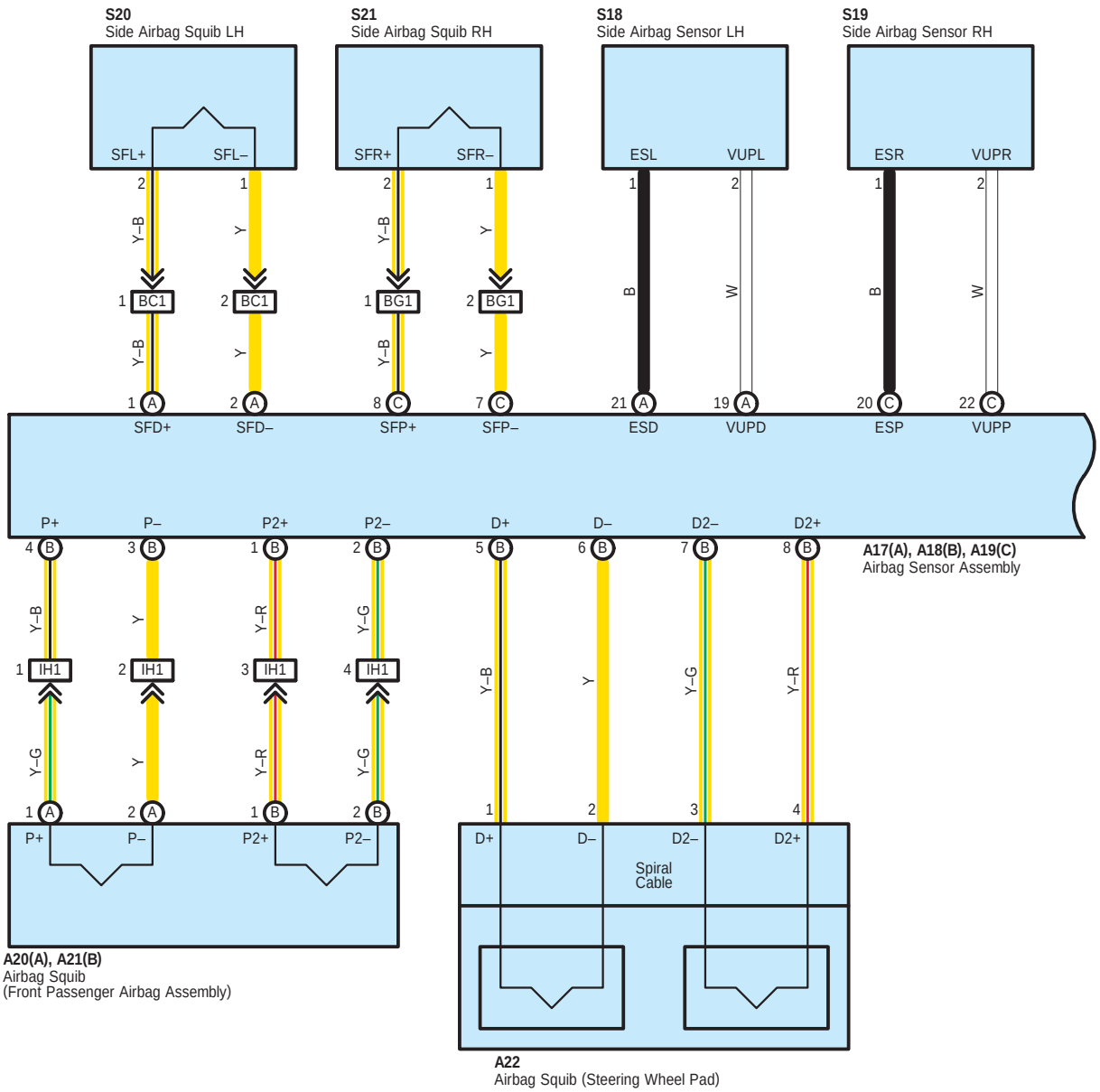

cardiagn.com

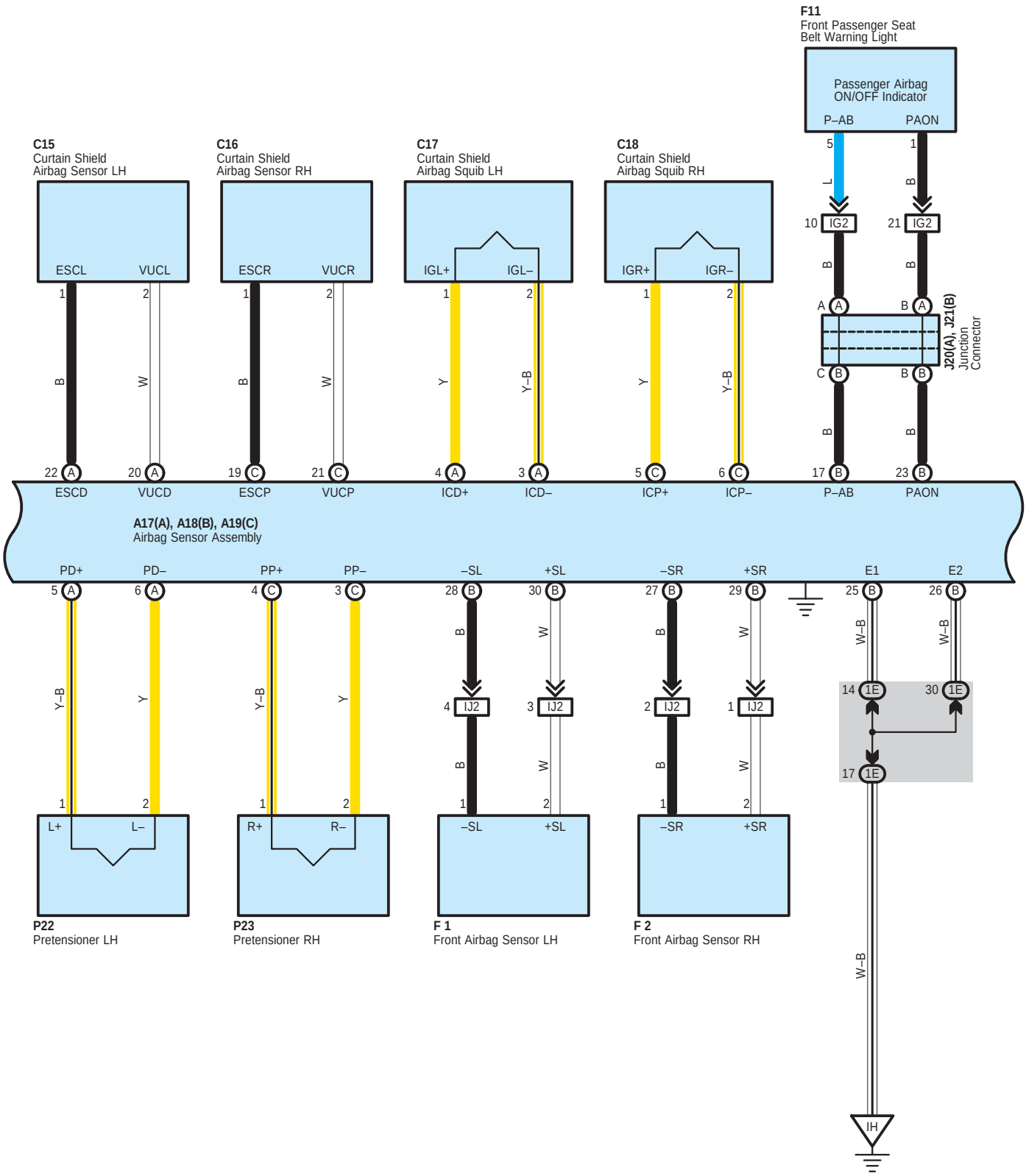

cardiagn.com

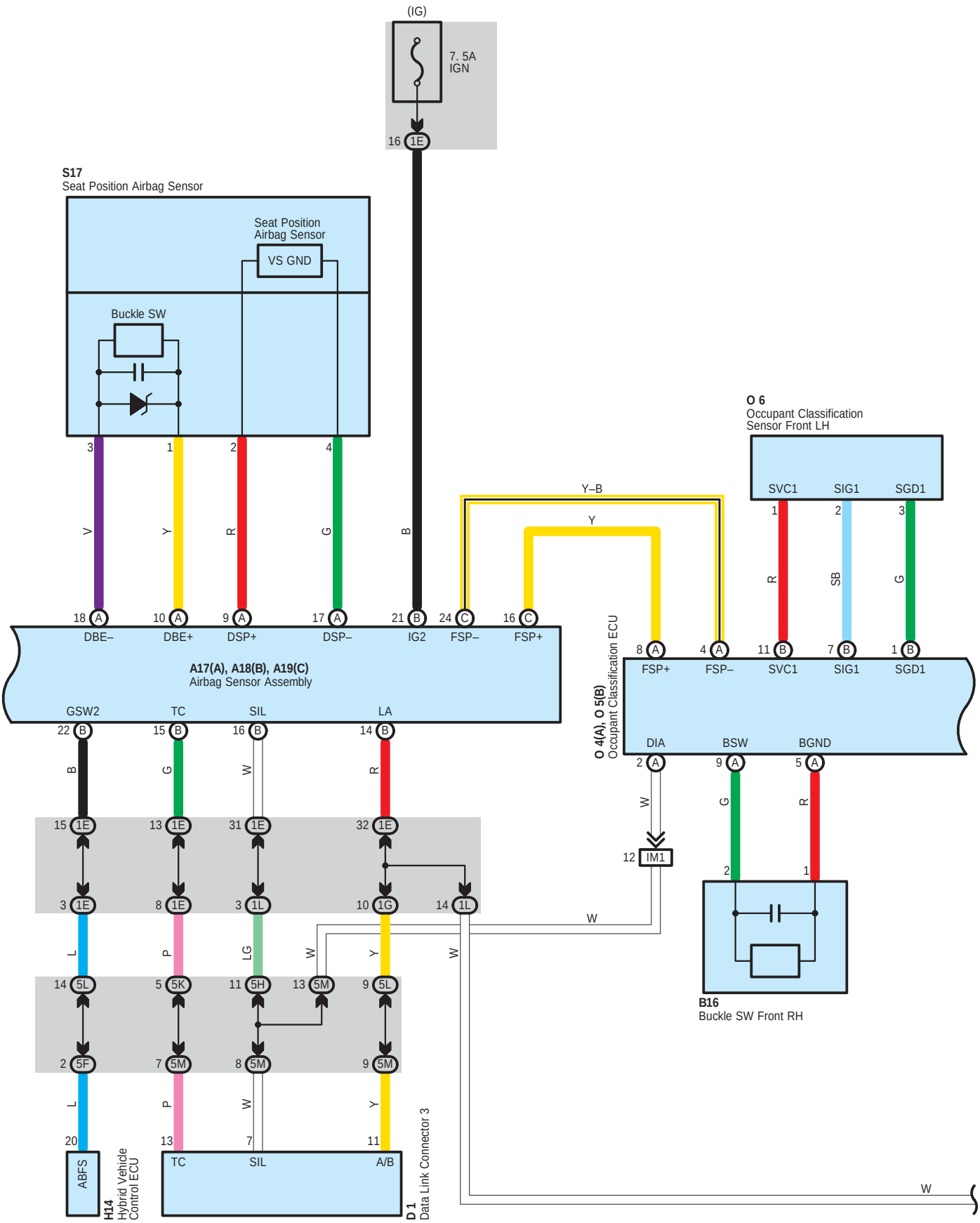

cardiagn.com

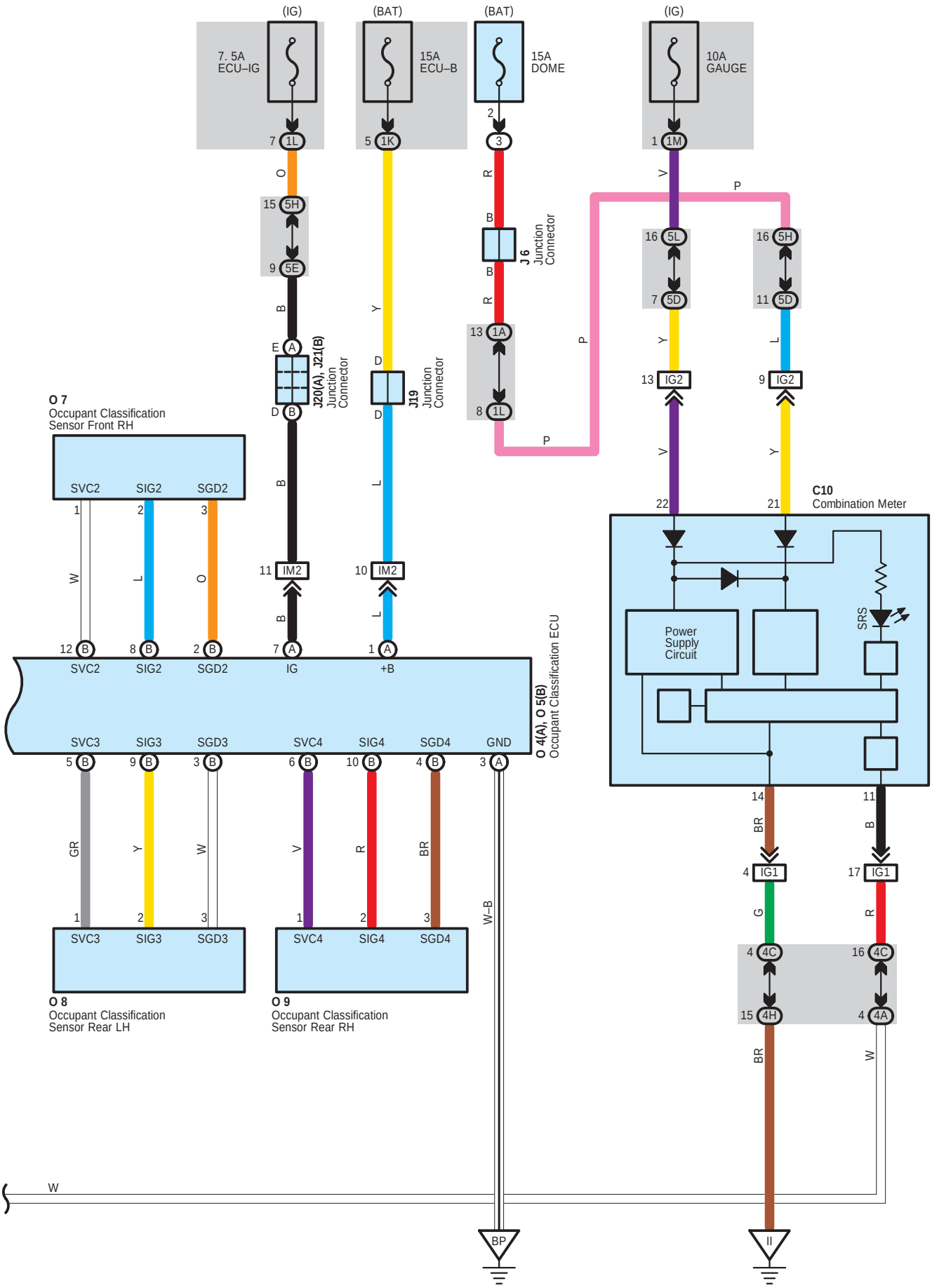

cardiagn.com

System Outline

* The system reaches an ignition judgment to deploy the following device based on the signals received from the front airbag sensor and deceleration sensor.
  – Driver Airbag
  – Front Passenger Airbag
  – Seat Belt Pretensioner
* The system reaches an ignition judgment to deploy the following device based on the signals received from the side airbag sensors.
  – Side Airbags
  – Curtain Shield Airbags
* The dual–stage SRS airbag system has been used for the driver and front passenger airbags. This system controls the optimal airbag inflation by judging the extent of impact, seat position (driver seat) and whether or not the seat belt is fastened (driver seat) and information from the front passenger occupant classification system.
* The front passenger occupant classification system judges whether the front passenger seat is occupied by an adult or child (with child seat) or is unoccupied, according to the load applied to the front passenger seat and whether the seat belt is buckled. Based on the results, it restricts the deployment of the front passenger airbag, front passenger side airbag, and front passenger seat belt pretensioner. In addition, the system informs the driver of the result of the judgment through the use of the AIRBAG ON/OFF indicator lights.
* The airbag sensor assembly transmits a signal to the hybrid vehicle control ECU in order to stop the fuel pump.
* The airbag sensor assembly transmits a signal to the hybrid vehicle control ECU in order to control hybrid high voltage cut off.

○ : Parts Location

Code		See Page	Code		See Page	Code	See Page
A17	A	48	D1		49	O7	54
A18	B	48	F1		46	O8	54
A19	C	48	F2		46	O9	54
A20	A	48	F11		49	P22	54
A21	B	48	H14		49	P23	54
A22		48	J6		50	S17	55
B16		52	J19		50	S18	55
C10		49	J20	A	50	S19	55
C15		52	J21	B	50	S20	55
C16		52	O4	A	54	S21	55
C17		52	O5	B	54		
C18		52	O6		54		

▭ : Relay Blocks

Code	See Page	Relay Blocks (Relay Block Location)
3	22	Engine Room R/B (Engine Compartment Left)

cardiagn.com

: **Junction Block and Wire Harness Connector**

Code	See Page	Junction Block and Wire Harness (Connector Location)
1A	30	Engine Room Main Wire and Driver Side J/B (Lower Finish Panel)
1E	30	Instrument Panel Wire and Driver Side J/B (Lower Finish Panel)
1F		
1G		
1K	31	
1L		
1M		
4A	38	Instrument Panel Wire and Center Connector No.1 (Behind the Combination Meter)
4C		
4H		
5D	42	Instrument Panel Wire and Center Connector No.2 (Instrument Panel Brace RH)
5E		
5F		
5H		
5K		
5L		
5M		

: **Connector Joining Wire Harness and Wire Harness**

Code	See Page	Joining Wire Harness and Wire Harness (Connector Location)
IG1	59	Instrument Panel Wire and Instrument Panel No.2 Wire (Behind the Combination Meter)
IG2		
IH1	59	Instrument Panel Wire and Instrument Panel No.1 Wire (Behind the Glove Box)
IJ2	59	Engine Room Main Wire and Instrument Panel Wire (Behind the Glove Box)
IM1	59	Instrument Panel Wire and Floor No.2 Wire (Right Kick Panel)
IM2		
BC1	60	Floor Wire and Seat Airbag No.1 Wire (Under the Driver's Seat)
BG1	60	Floor No.2 Wire and Seat Airbag No.2 Wire (Under the Front Passenger's Seat)

: **Ground Points**

Code	See Page	Ground Points Location
IH	58	Cowl Side Panel LH
II	58	Instrument Panel Brace LH
BP	60	Front Side of Right Quarter Panel

cardiagn.com

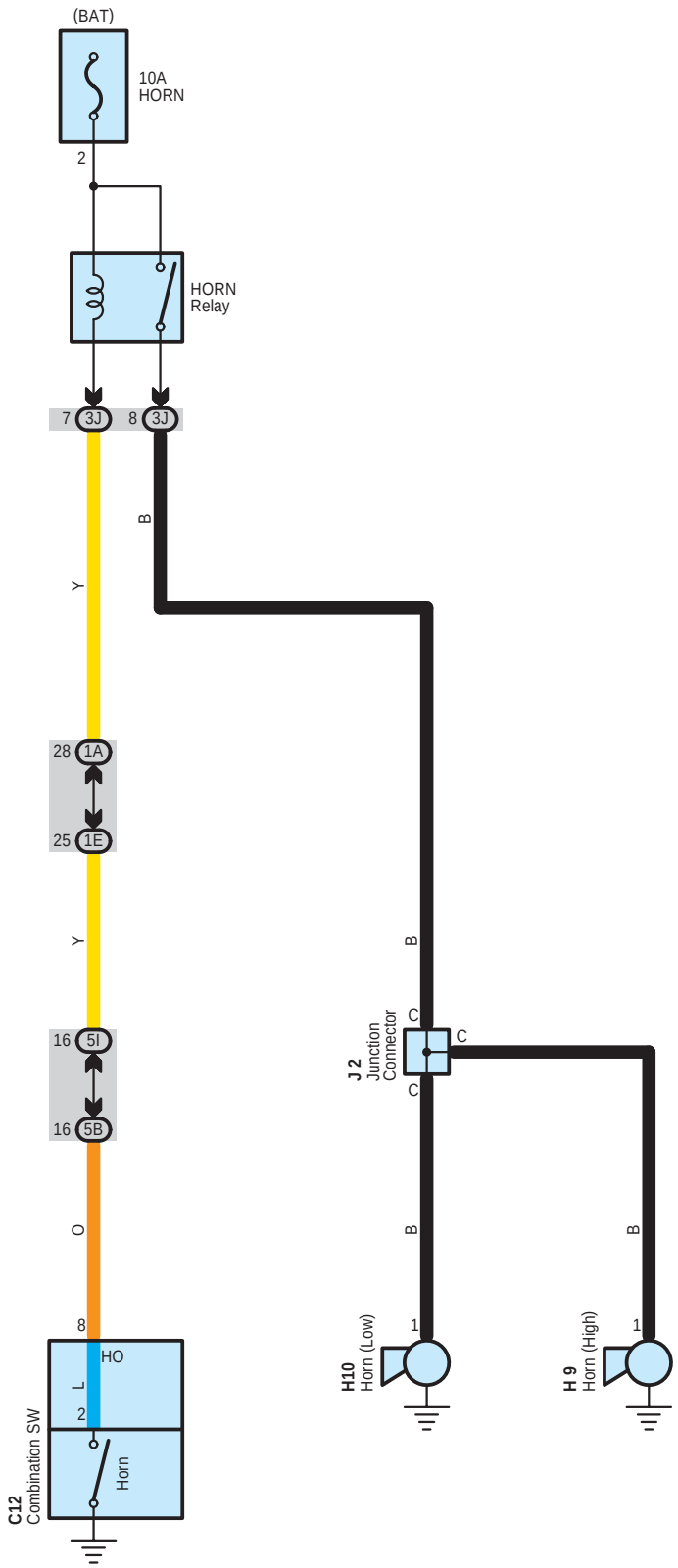

cardiagn.com

○ : **Parts Location**

Code	See Page	Code	See Page	Code	See Page
C12	49	H10	46		
H9	46	J2	47		

: **Junction Block and Wire Harness Connector**

Code	See Page	Junction Block and Wire Harness (Connector Location)
1A	30	Engine Room Main Wire and Driver Side J/B (Lower Finish Panel)
1E	30	Instrument Panel Wire and Driver Side J/B (Lower Finish Panel)
3J	24	Engine Room Main Wire and Engine Room J/B (Engine Compartment Left)
5B	42	Instrument Panel Wire and Center Connector No.2 (Instrument Panel Brace RH)
5I		

cardiagn.com

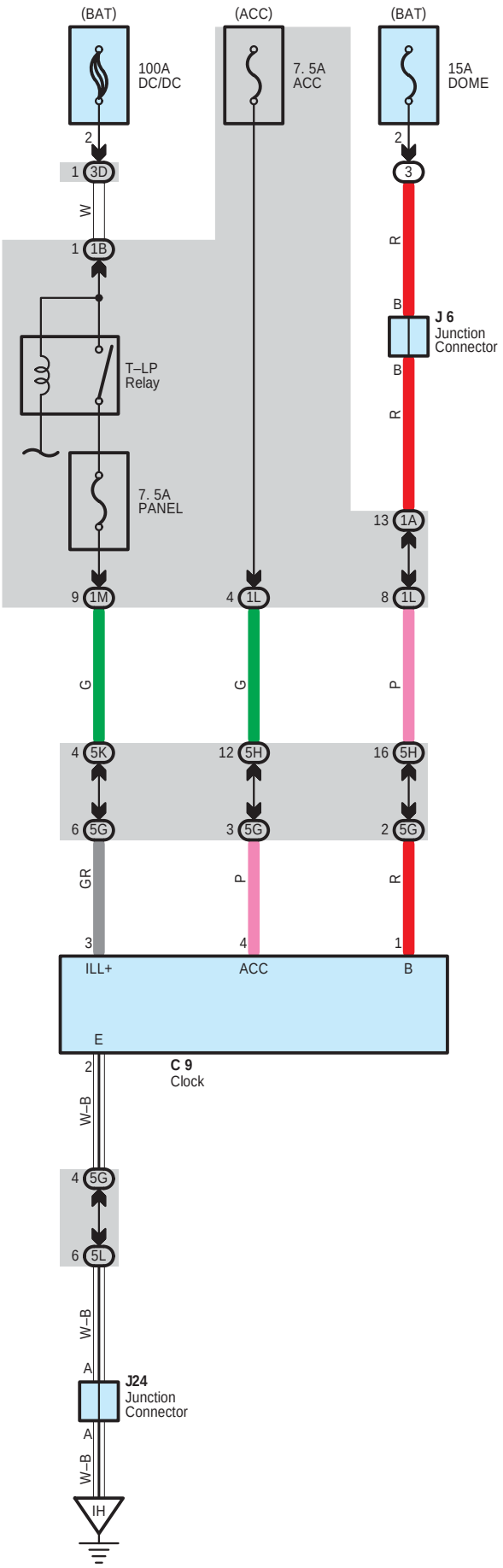

cardiagn.com

: **Parts Location**

Code	See Page	Code	See Page	Code	See Page
C9	49	J6	50	J24	50

: **Relay Blocks**

Code	See Page	Relay Blocks (Relay Block Location)
3	22	Engine Room R/B (Engine Compartment Left)

: **Junction Block and Wire Harness Connector**

Code	See Page	Junction Block and Wire Harness (Connector Location)
1A	30	Engine Room Main Wire and Driver Side J/B (Lower Finish Panel)
1B		
1L	31	Instrument Panel Wire and Driver Side J/B (Lower Finish Panel)
1M		
3D	23	Engine Room Main Wire and Engine Room J/B (Engine Compartment Left)
5G	42	Instrument Panel Wire and Center Connector No.2 (Instrument Panel Brace RH)
5H		
5K		
5L		

: **Ground Points**

Code	See Page	Ground Points Location
IH	58	Cowl Side Panel LH

cardiagn.com

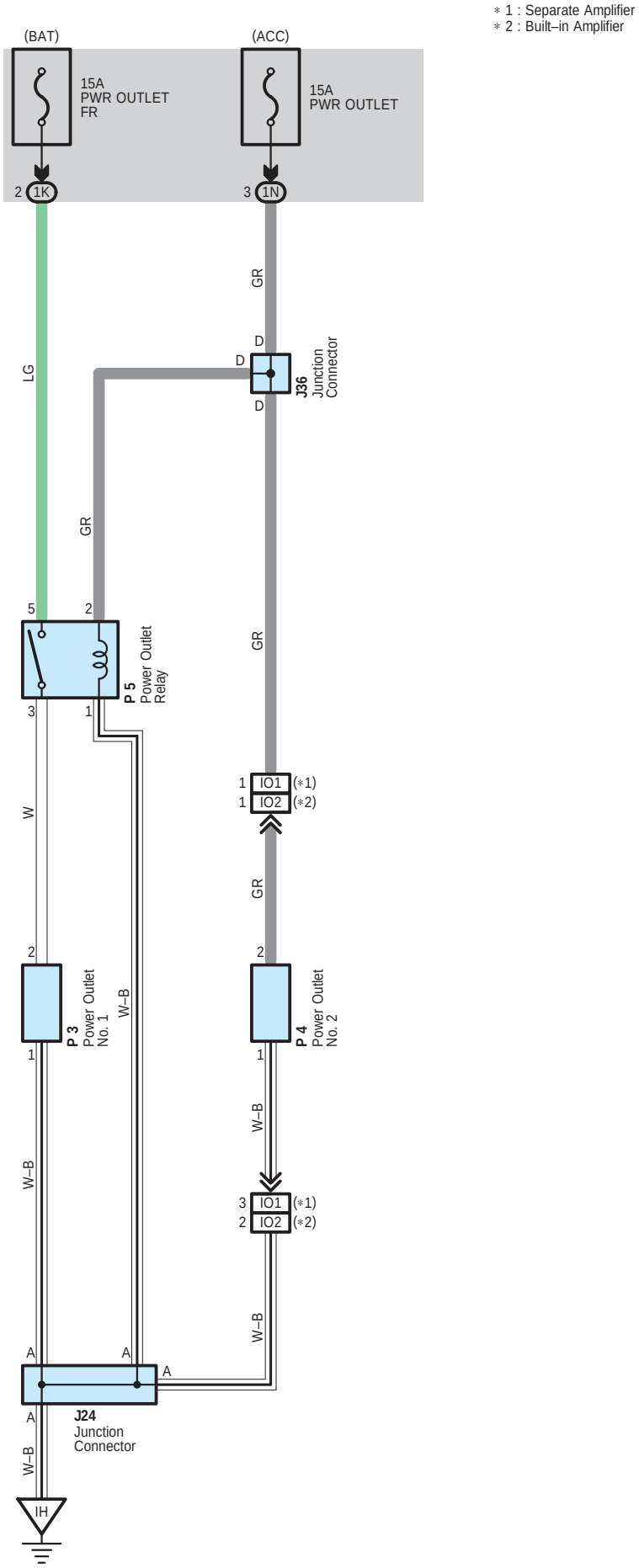

cardiagn.com

○ : **Parts Location**

Code	See Page	Code	See Page	Code	See Page
J24	50	P3	51	P5	51
J36	50	P4	51		

: **Junction Block and Wire Harness Connector**

Code	See Page	Junction Block and Wire Harness (Connector Location)
1K	31	Instrument Panel Wire and Driver Side J/B (Lower Finish Panel)
1N		

: **Connector Joining Wire Harness and Wire Harness**

Code	See Page	Joining Wire Harness and Wire Harness (Connector Location)
IO1	59	Instrument Panel Wire and Instrument Panel No.4 Wire (Front Console Box LH)
IO2		

: **Ground Points**

Code	See Page	Ground Points Location
IH	58	Cowl Side Panel LH

cardiagn.com

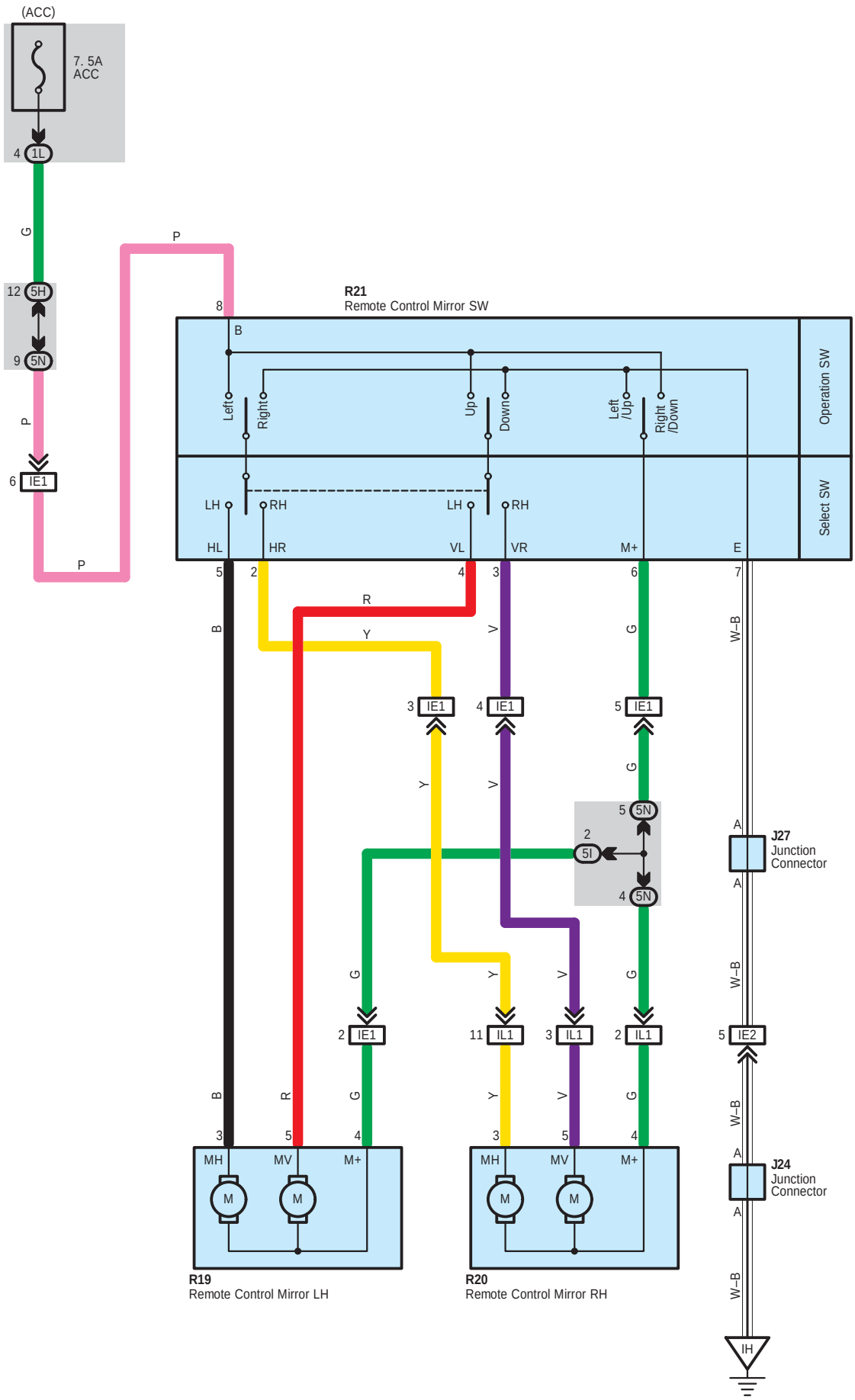

cardiagn.com

○ : **Parts Location**

Code	See Page	Code	See Page	Code	See Page
J24	50	R19	54	R21	54
J27	53	R20	54		

: **Junction Block and Wire Harness Connector**

Code	See Page	Junction Block and Wire Harness (Connector Location)
1L	31	Instrument Panel Wire and Driver Side J/B (Lower Finish Panel)
5H	42	Instrument Panel Wire and Center Connector No.2 (Instrument Panel Brace RH)
5I		
5N		

: **Connector Joining Wire Harness and Wire Harness**

Code	See Page	Joining Wire Harness and Wire Harness (Connector Location)
IE1	58	Front Door LH Wire and Instrument Panel Wire (Left Kick Panel)
IE2		
IL1	59	Front Door RH Wire and Instrument Panel Wire (Right Kick Panel)

: **Ground Points**

Code	See Page	Ground Points Location
IH	58	Cowl Side Panel LH

cardiagn.com

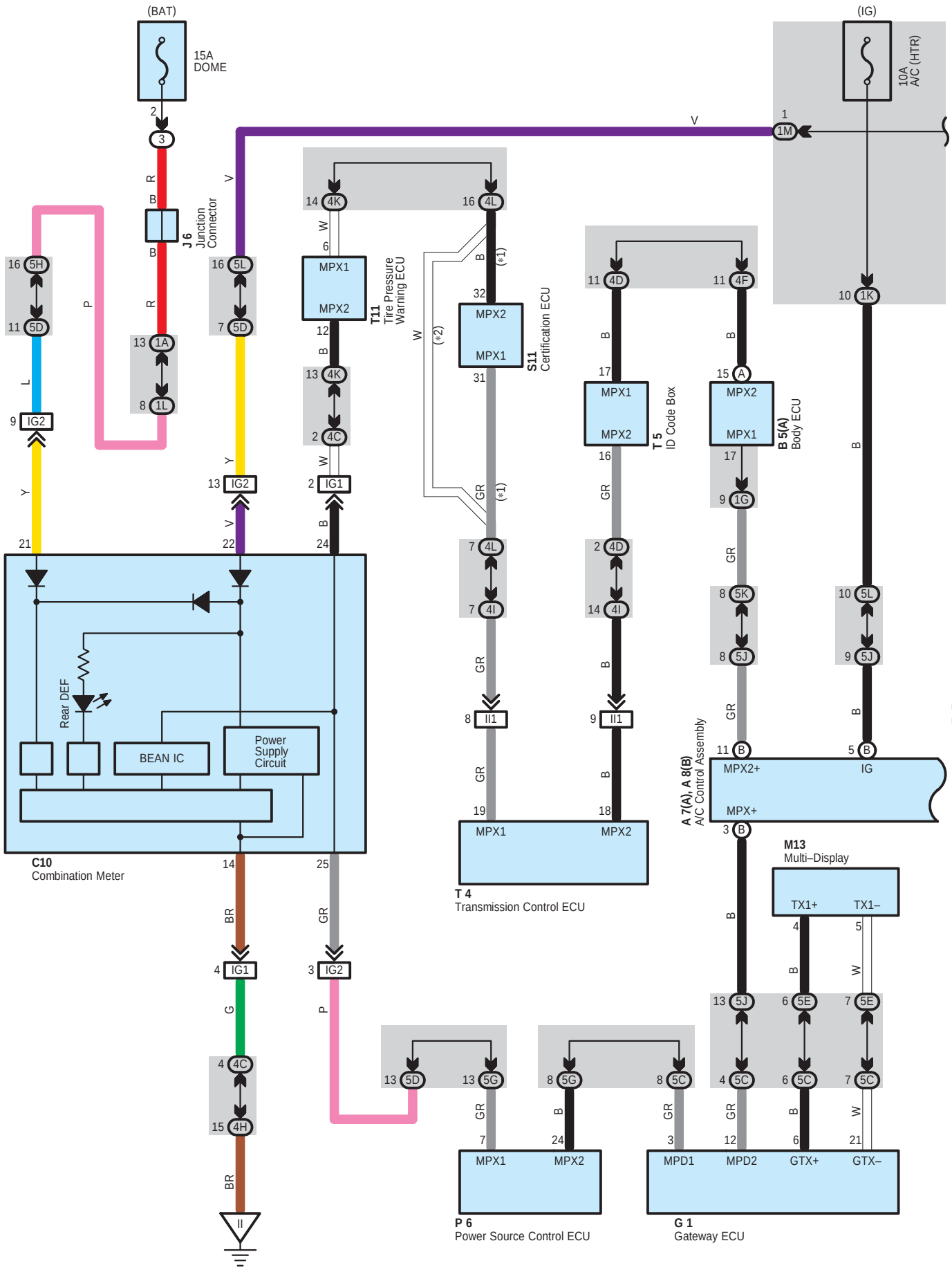

cardiagn.com

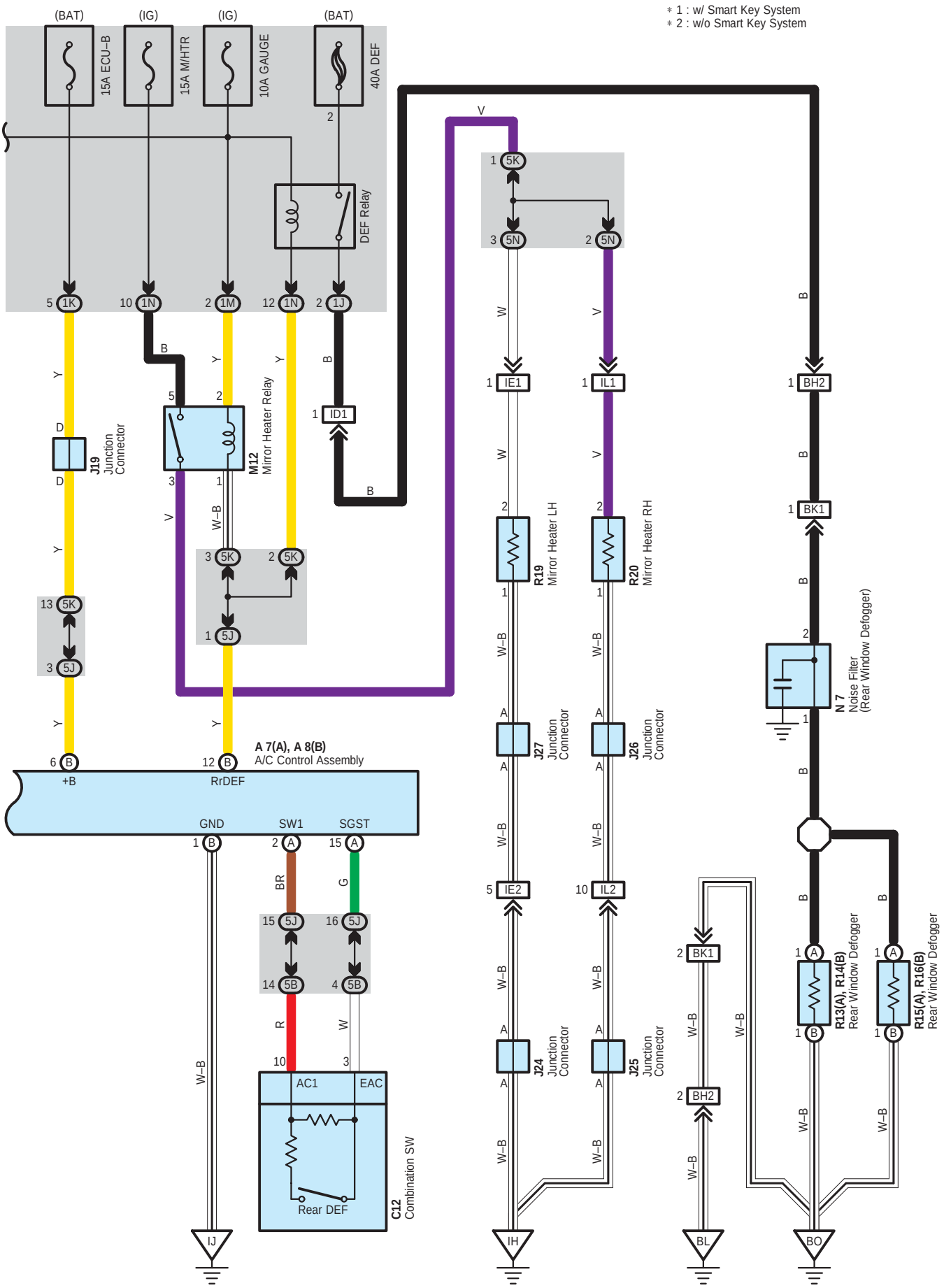

cardiagn.com

Rear Window Defogger and Mirror Heater

System Outline

When power SW is at IG ON position, turning ON rear DEF SW on the steering wheel sends signal to A/C control assembly. Then A/C control assembly flows electricity in TERMINAL Rr DEF, which activates DEF relay and mirror heater relay. As a result, rear DEF SW and mirror heater is turned on.
Turning ON rear DEF SW of multi–display sends signal to A/C control assembly. Then the same action follows as above.
During rear window defogger and mirror heater in operation, signal is input in combination meter, lighting rear DEF indicator in combination meter.

: Parts Location

Code		See Page	Code		See Page	Code		See Page
A7	A	48	J25		50	R15	A	54
A8	B	48	J26		53	R16	B	54
B5	A	48	J27		53	R19		54
C10		49	M12		50	R20		54
C12		49	M13		50	S11		51
G1		49	N7		54	T4		51
J6		50	P6		51	T5		51
J19		50	R13	A	54	T11		51
J24		50	R14	B	54			

: Relay Blocks

Code	See Page	Relay Blocks (Relay Block Location)
3	22	Engine Room R/B (Engine Compartment Left)

: Junction Block and Wire Harness Connector

Code	See Page	Junction Block and Wire Harness (Connector Location)
1A	30	Engine Room Main Wire and Driver Side J/B (Lower Finish Panel)
1G	30	Instrument Panel Wire and Driver Side J/B (Lower Finish Panel)
1J		
1K	31	
1L		
1M		
1N		
4C	38	Instrument Panel Wire and Center Connector No.1 (Behind the Combination Meter)
4D		
4F		
4H		
4I		
4K		
4L		
5B	42	Instrument Panel Wire and Center Connector No.2 (Instrument Panel Brace RH)
5C		
5D		
5E		
5G		
5H		
5J		
5K		
5L		
5N		

cardiagn.com

: **Connector Joining Wire Harness and Wire Harness**

Code	See Page	Joining Wire Harness and Wire Harness (Connector Location)
ID1	58	Instrument Panel Wire and Floor Wire (Left Kick Panel)
IE1	58	Front Door LH Wire and Instrument Panel Wire (Left Kick Panel)
IE2		
IG1	59	Instrument Panel Wire and Instrument Panel No.2 Wire (Behind the Combination Meter)
IG2		
II1	59	Engine Wire and Instrument Panel Wire (Behind the Glove Box)
IL1	59	Front Door RH Wire and Instrument Panel Wire (Right Kick Panel)
IL2		
BH2	61	Back Door No.1 Wire and Floor Wire (Rear Side of Roof Panel)
BK1	61	Back Door No.1 Wire and Back Door No.2 Wire (Rear Side of Roof Panel)

: **Ground Points**

Code	See Page	Ground Points Location
IH	58	Cowl Side Panel LH
II	58	Instrument Panel Brace LH
IJ	58	Instrument Panel Brace RH
BL	60	Rear Side of Left Quarter Panel
BO	60	Center of the Back Door Panel

cardiagn.com

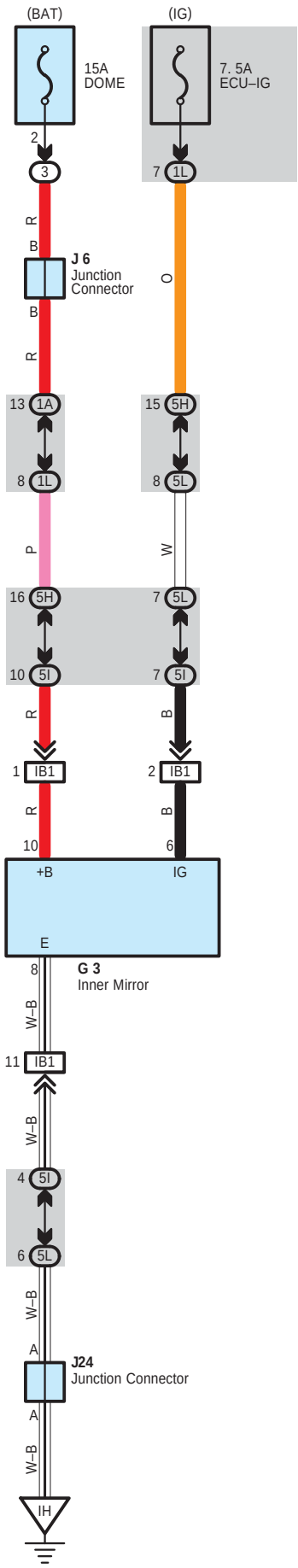

cardiagn.com

: **Parts Location**

Code	See Page	Code	See Page	Code	See Page
G3	53	J6	50	J24	50

: **Relay Blocks**

Code	See Page	Relay Blocks (Relay Block Location)
3	22	Engine Room R/B (Engine Compartment Left)

: **Junction Block and Wire Harness Connector**

Code	See Page	Junction Block and Wire Harness (Connector Location)
1A	30	Engine Room Main Wire and Driver Side J/B (Lower Finish Panel)
1L	31	Instrument Panel Wire and Driver Side J/B (Lower Finish Panel)
5H	42	Instrument Panel Wire and Center Connector No.2 (Instrument Panel Brace RH)
5I		
5L		

: **Connector Joining Wire Harness and Wire Harness**

Code	See Page	Joining Wire Harness and Wire Harness (Connector Location)
IB1	58	Roof Wire and Instrument Panel Wire (Upper Parts of Front Body Pillar LH)

: **Ground Points**

Code	See Page	Ground Points Location
IH	58	Cowl Side Panel LH

cardiagn.com

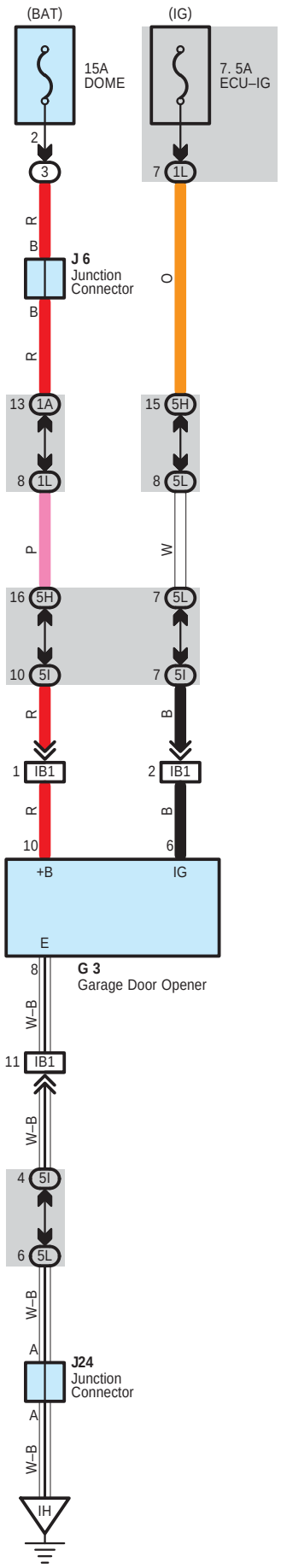

cardiagn.com

: **Parts Location**

Code	See Page	Code	See Page	Code	See Page
G3	53	J6	50	J24	50

: **Relay Blocks**

Code	See Page	Relay Blocks (Relay Block Location)
3	22	Engine Room R/B (Engine Compartment Left)

: **Junction Block and Wire Harness Connector**

Code	See Page	Junction Block and Wire Harness (Connector Location)
1A	30	Engine Room Main Wire and Driver Side J/B (Lower Finish Panel)
1L	31	Instrument Panel Wire and Driver Side J/B (Lower Finish Panel)
5H	42	Instrument Panel Wire and Center Connector No.2 (Instrument Panel Brace RH)
5I		
5L		

: **Connector Joining Wire Harness and Wire Harness**

Code	See Page	Joining Wire Harness and Wire Harness (Connector Location)
IB1	58	Roof Wire and Instrument Panel Wire (Upper Parts of Front Body Pillar LH)

: **Ground Points**

Code	See Page	Ground Points Location
IH	58	Cowl Side Panel LH

cardiagn.com

Multi–Display and Audio System for Separate Amplifier

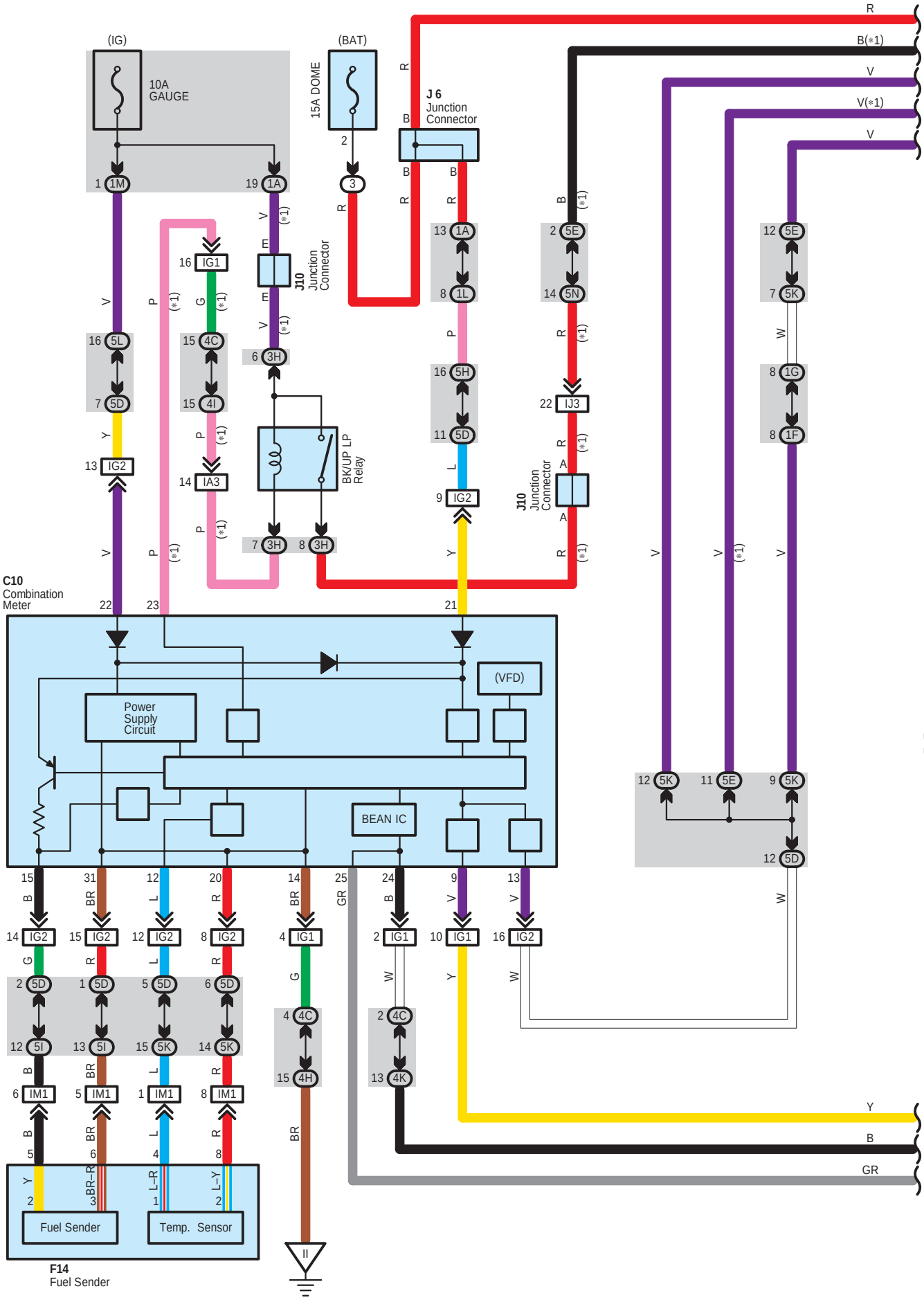

cardiagn.com

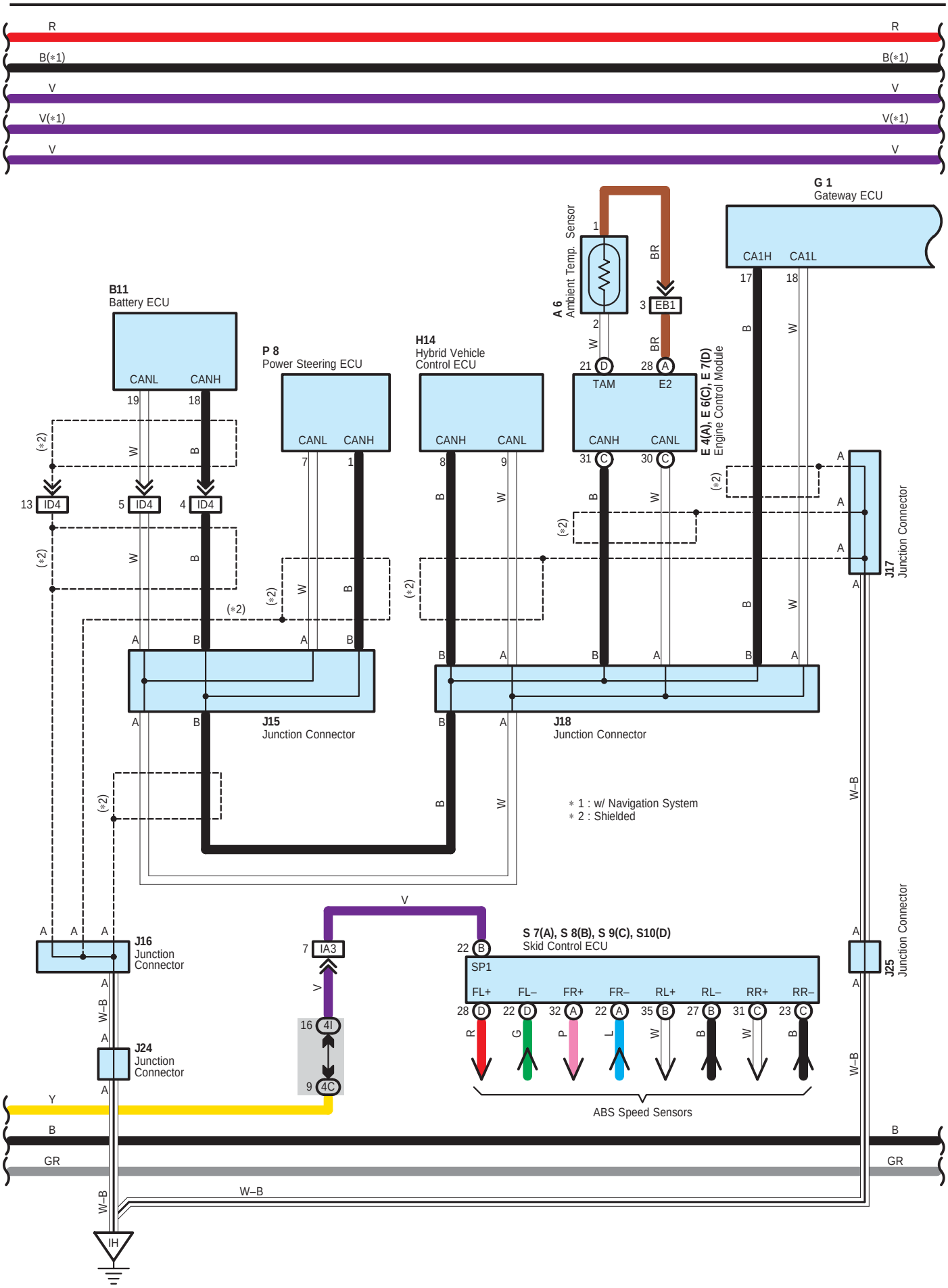

cardiagn.com

Multi–Display and Audio System for Separate Amplifier

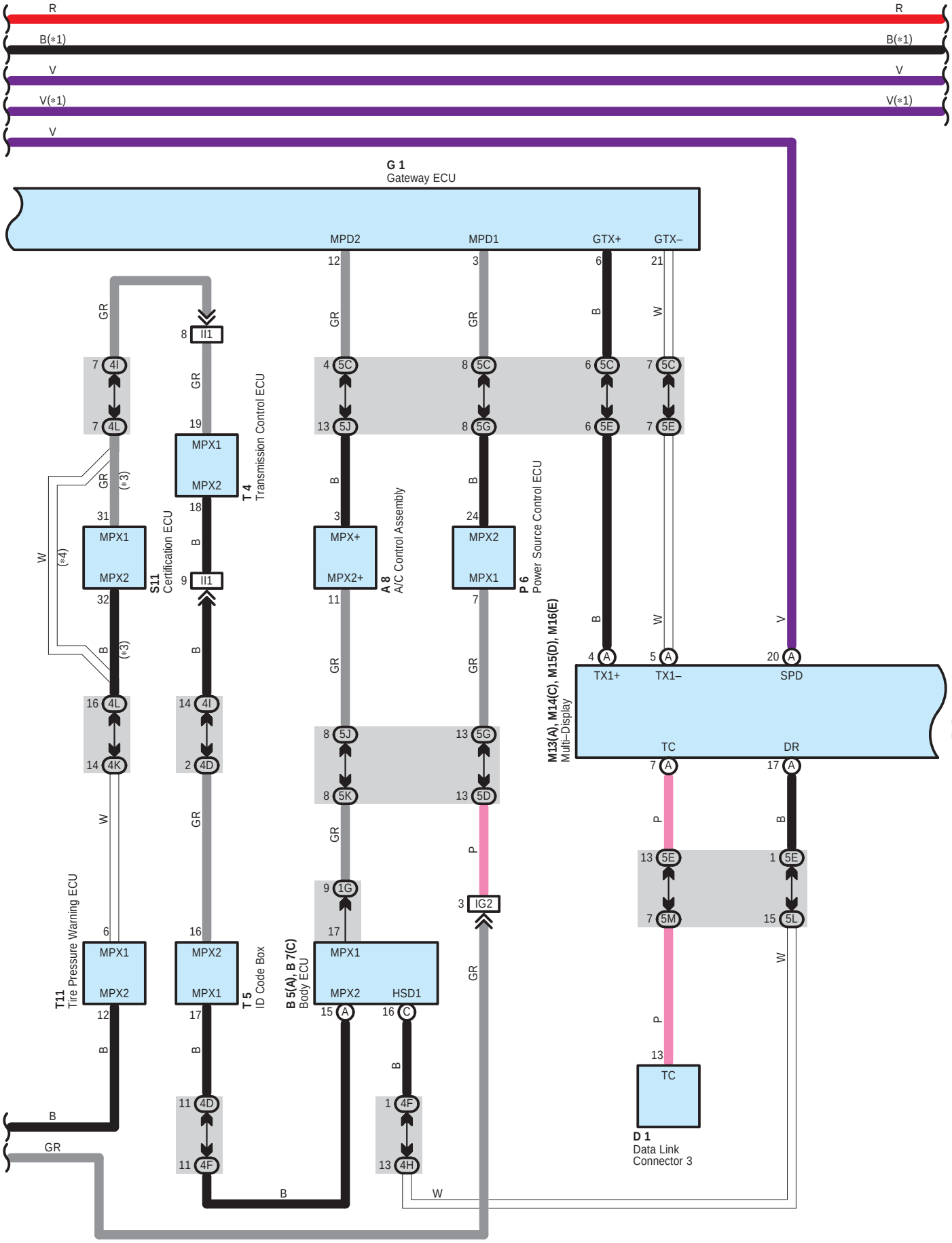

cardiagn.com

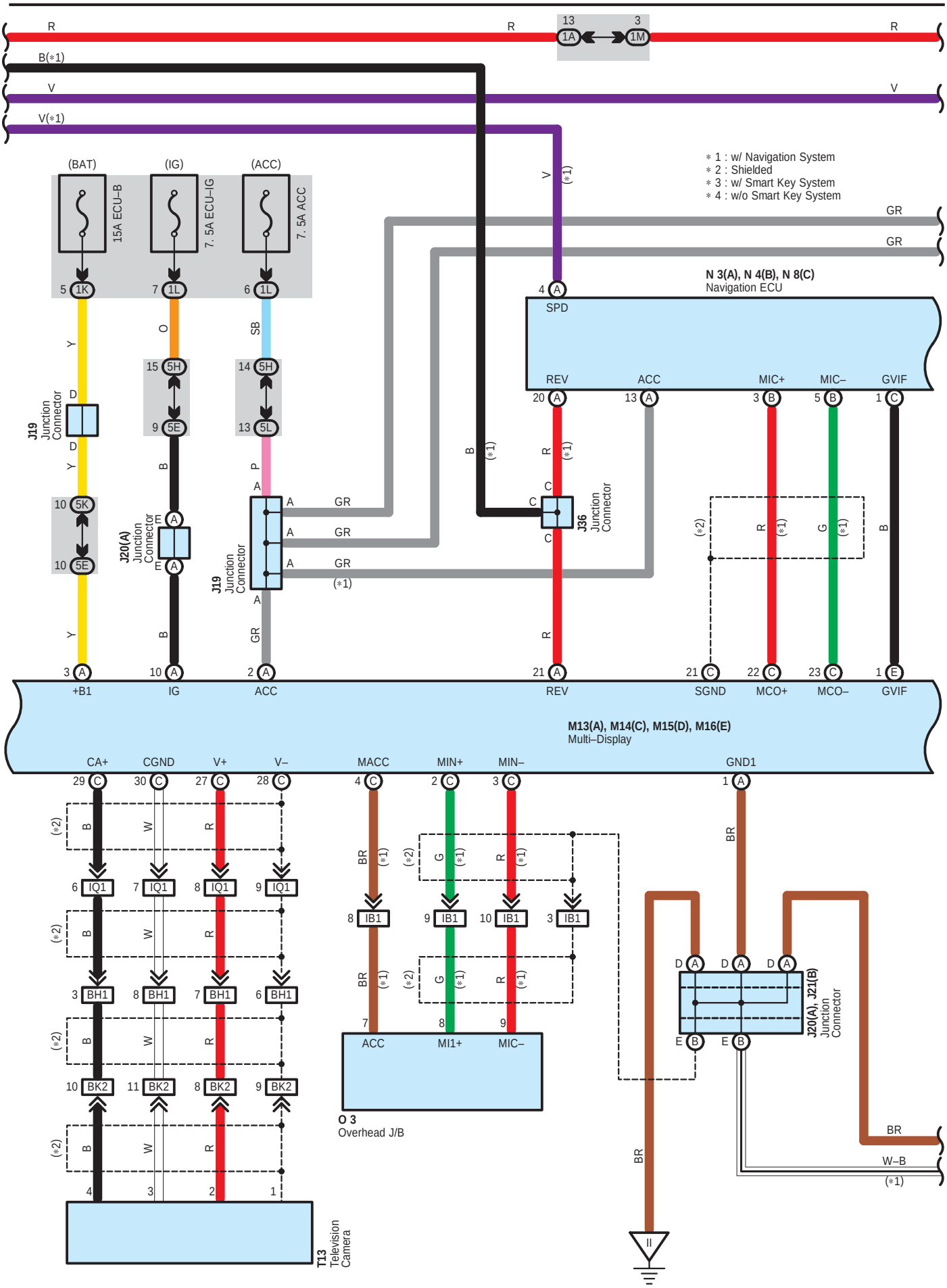

cardiagn.com

Multi–Display and Audio System for Separate Amplifier

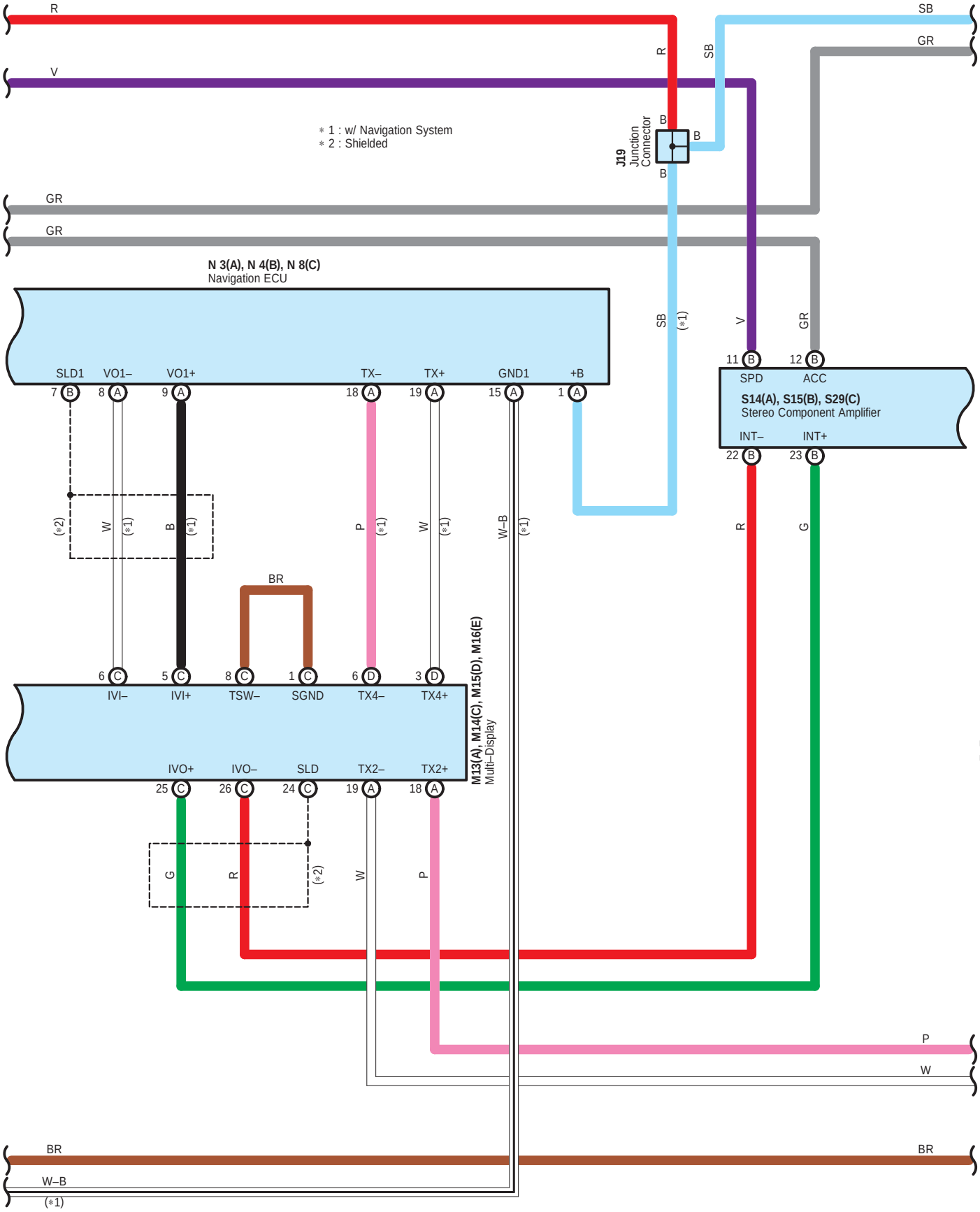

cardiagn.com

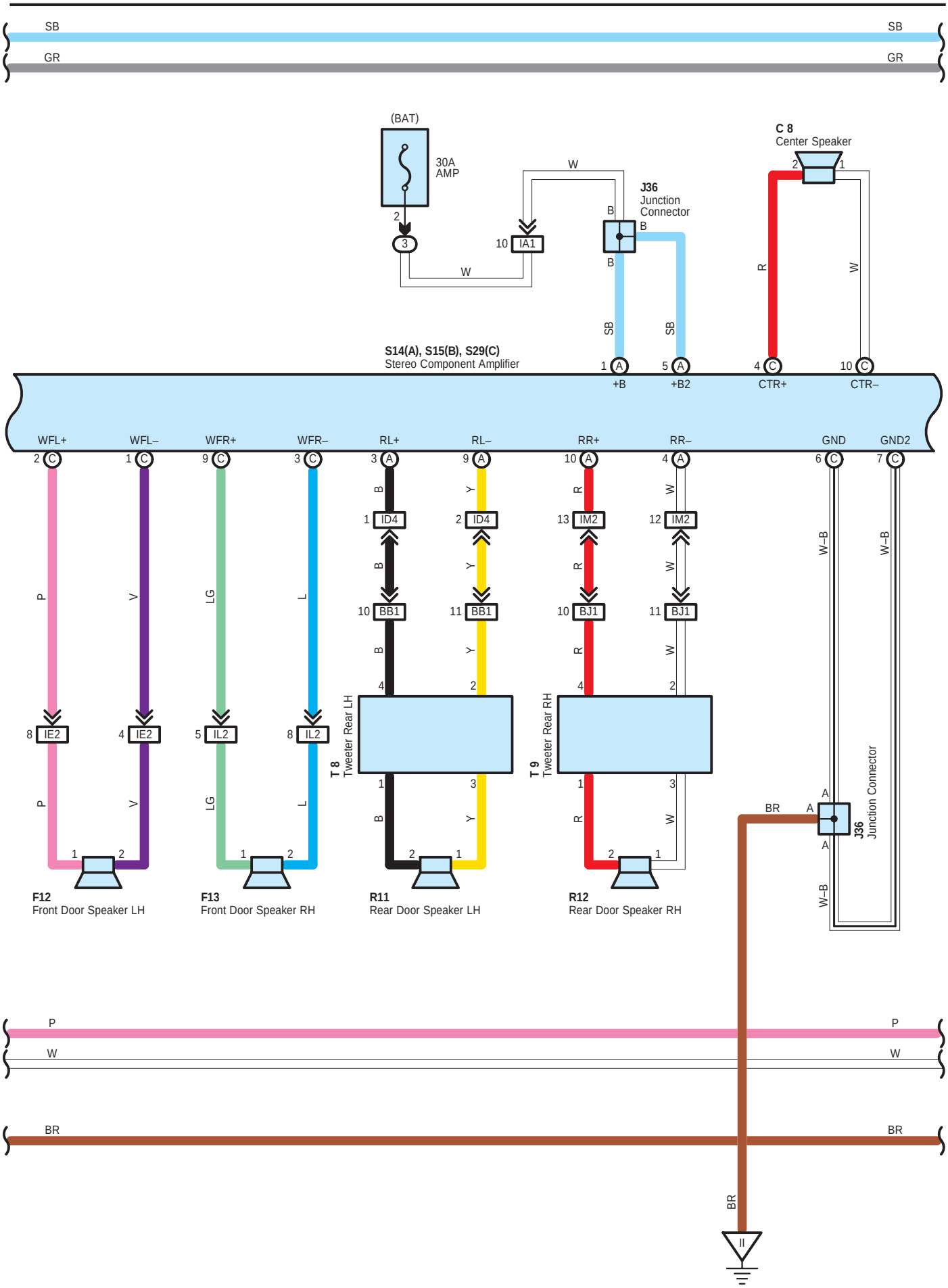

cardiagn.com

Multi–Display and Audio System for Separate Amplifier

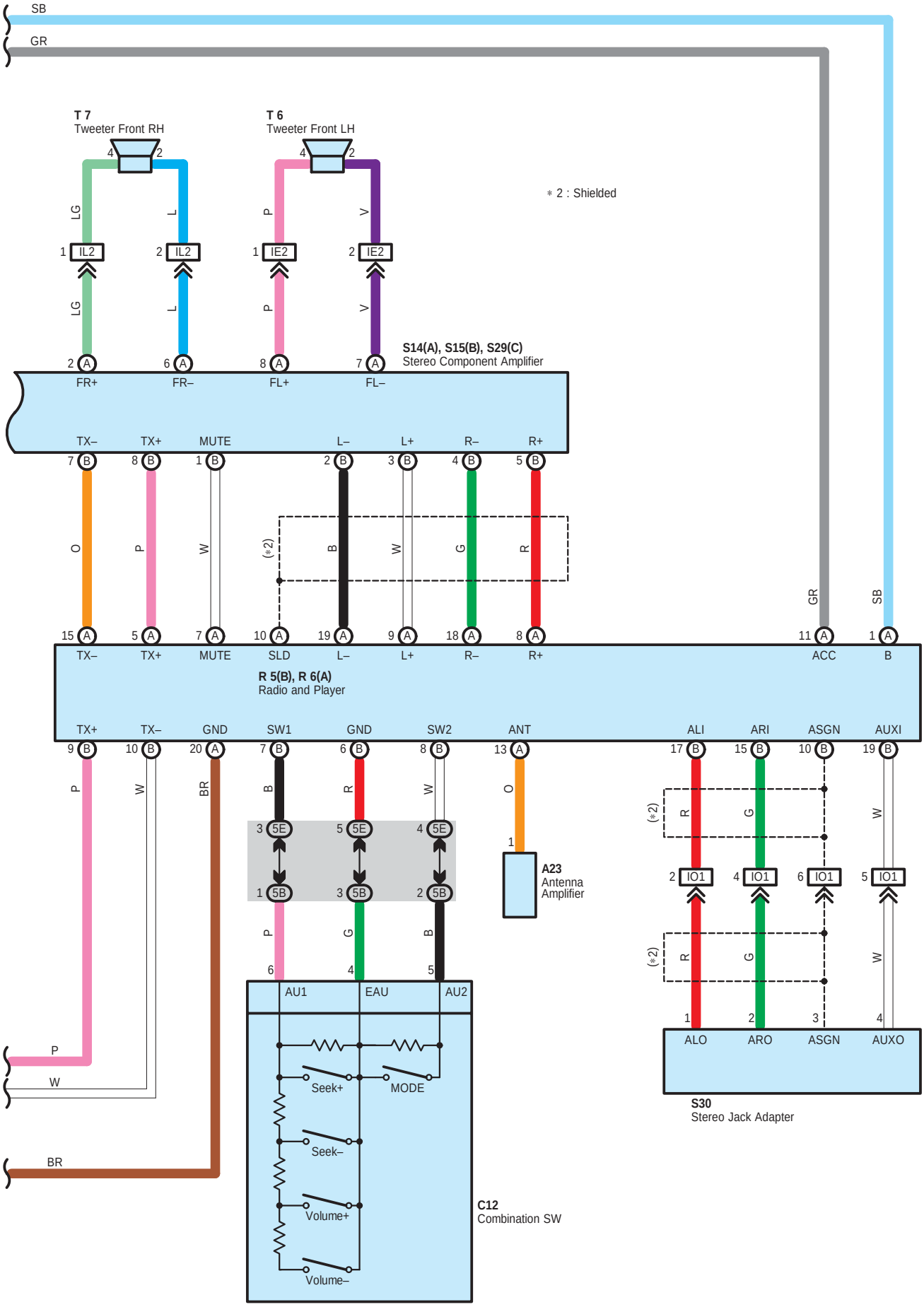

cardiagn.com

○ : **Parts Location**

Code		See Page	Code		See Page	Code		See Page
A6		46	J16		50	R11		54
A8		48	J17		50	R12		54
A23		48	J18		50	S7	A	51
B5	A	48	J19		50	S8	B	51
B7	C	48	J20	A	50	S9	C	51
B11		52	J21	B	50	S10	D	51
C8		49	J24		50	S11		51
C10		49	J25		50	S14	A	51
C12		49	J36		50	S15	B	51
D1		49	M13	A	50	S29	C	51
E4	A	49	M14	C	50	S30		51
E6	C	49	M15	D	50	T4		51
E7	D	49	M16	E	50	T5		51
F12		53	N3	A	50	T6		55
F13		53	N4	B	50	T7		55
F14		53	N8	C	50	T8		55
G1		49	O3		54	T9		55
H14		49	P6		51	T11		51
J6		50	P8		51	T13		55
J10		50	R5	B	51			
J15		50	R6	A	51			

▭ : **Relay Blocks**

Code	See Page	Relay Blocks (Relay Block Location)
3	22	Engine Room R/B (Engine Compartment Left)

cardiagn.com

: **Junction Block and Wire Harness Connector**

Code	See Page	Junction Block and Wire Harness (Connector Location)
1A	30	Engine Room Main Wire and Driver Side J/B (Lower Finish Panel)
1F	30	Instrument Panel Wire and Driver Side J/B (Lower Finish Panel)
1G		
1K	31	
1L		
1M		
3H	24	Engine Room Main Wire and Engine Room J/B (Engine Compartment Left)
4C	38	Instrument Panel Wire and Center Connector No.1 (Behind the Combination Meter)
4D		
4F		
4H		
4I		
4K		
4L		
5B	42	Instrument Panel Wire and Center Connector No.2 (Instrument Panel Brace RH)
5C		
5D		
5E		
5G		
5H		
5I		
5J		
5K		
5L		
5M		
5N		

: **Connector Joining Wire Harness and Wire Harness**

Code	See Page	Joining Wire Harness and Wire Harness (Connector Location)
EB1	56	Engine Wire and Engine Room Main Wire (Inside of the Engine Room R/B)
IA1	58	Engine Room Main Wire and Instrument Panel Wire (Upper Parts of Front Body Pillar LH)
IA3		
IB1	58	Roof Wire and Instrument Panel Wire (Upper Parts of Front Body Pillar LH)
ID4	58	Instrument Panel Wire and Floor Wire (Left Kick Panel)
IE2	58	Front Door LH Wire and Instrument Panel Wire (Left Kick Panel)
IG1	59	Instrument Panel Wire and Instrument Panel No.2 Wire (Behind the Combination Meter)
IG2		
II1	59	Engine Wire and Instrument Panel Wire (Behind the Glove Box)
IJ3	59	Engine Room Main Wire and Instrument Panel Wire (Behind the Glove Box)
IL2	59	Front Door RH Wire and Instrument Panel Wire (Right Kick Panel)
IM1	59	Instrument Panel Wire and Floor No.2 Wire (Right Kick Panel)
IM2		
IO1	59	Instrument Panel Wire and Instrument Panel No.4 Wire (Front Console Box LH)
IQ1	59	Floor
BB1	60	Rear Door No.2 Wire and Floor Wire (Left Center Pillar)
BH1	61	Back Door No.1 Wire and Floor Wire (Rear Side of Roof Panel)
BJ1	61	Rear Door No.1 Wire and Floor No.2 Wire (Right Center Pillar)
BK2	61	Back Door No.1 Wire and Back Door No.2 Wire (Rear Side of Roof Panel)

cardiagn.com

▽ : **Ground Points**

Code	See Page	Ground Points Location
IH	58	Cowl Side Panel LH
II	58	Instrument Panel Brace LH

cardiagn.com

Multi–Display and Audio System for Built–in Amplifier

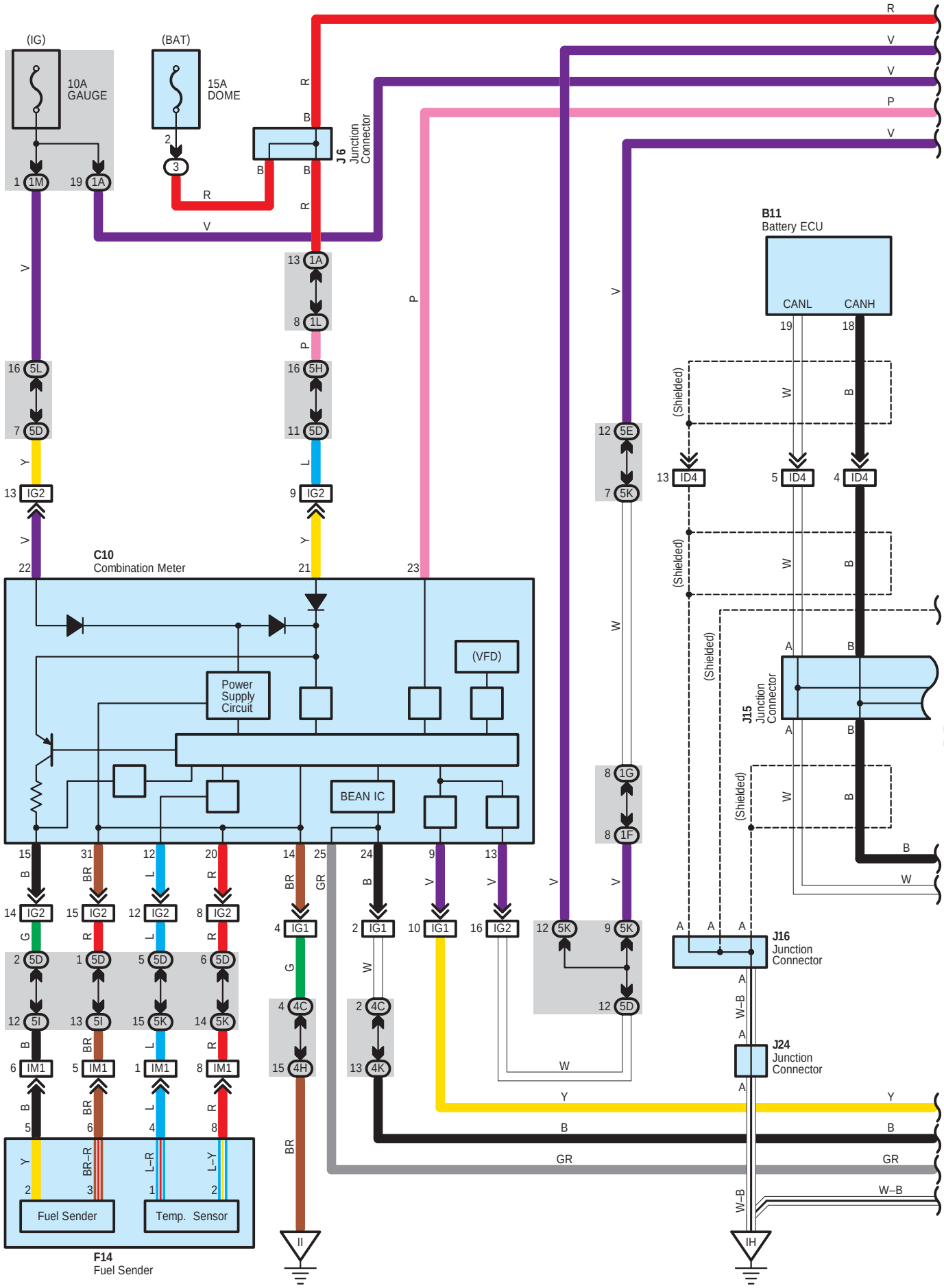

cardiagn.com

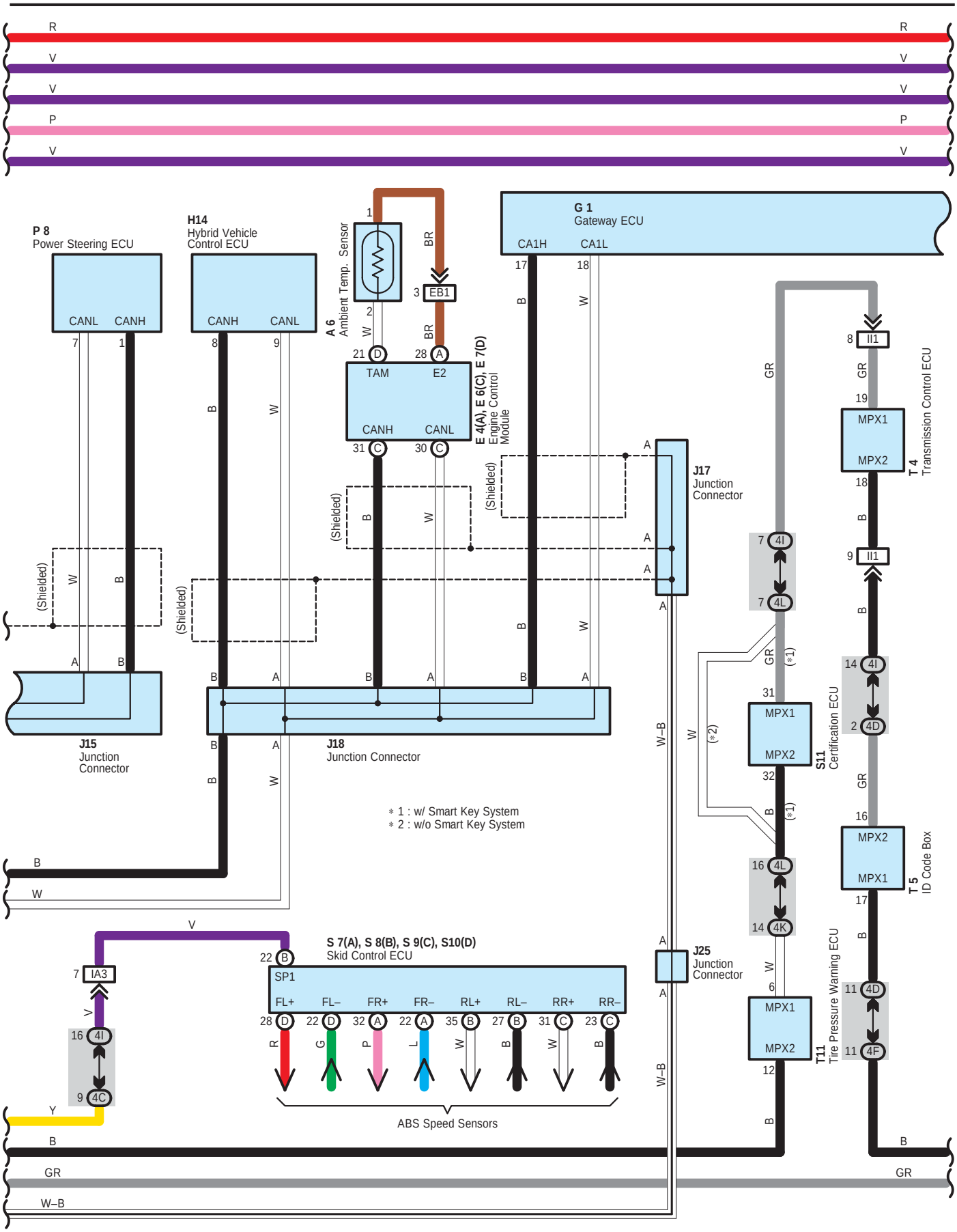

cardiagn.com

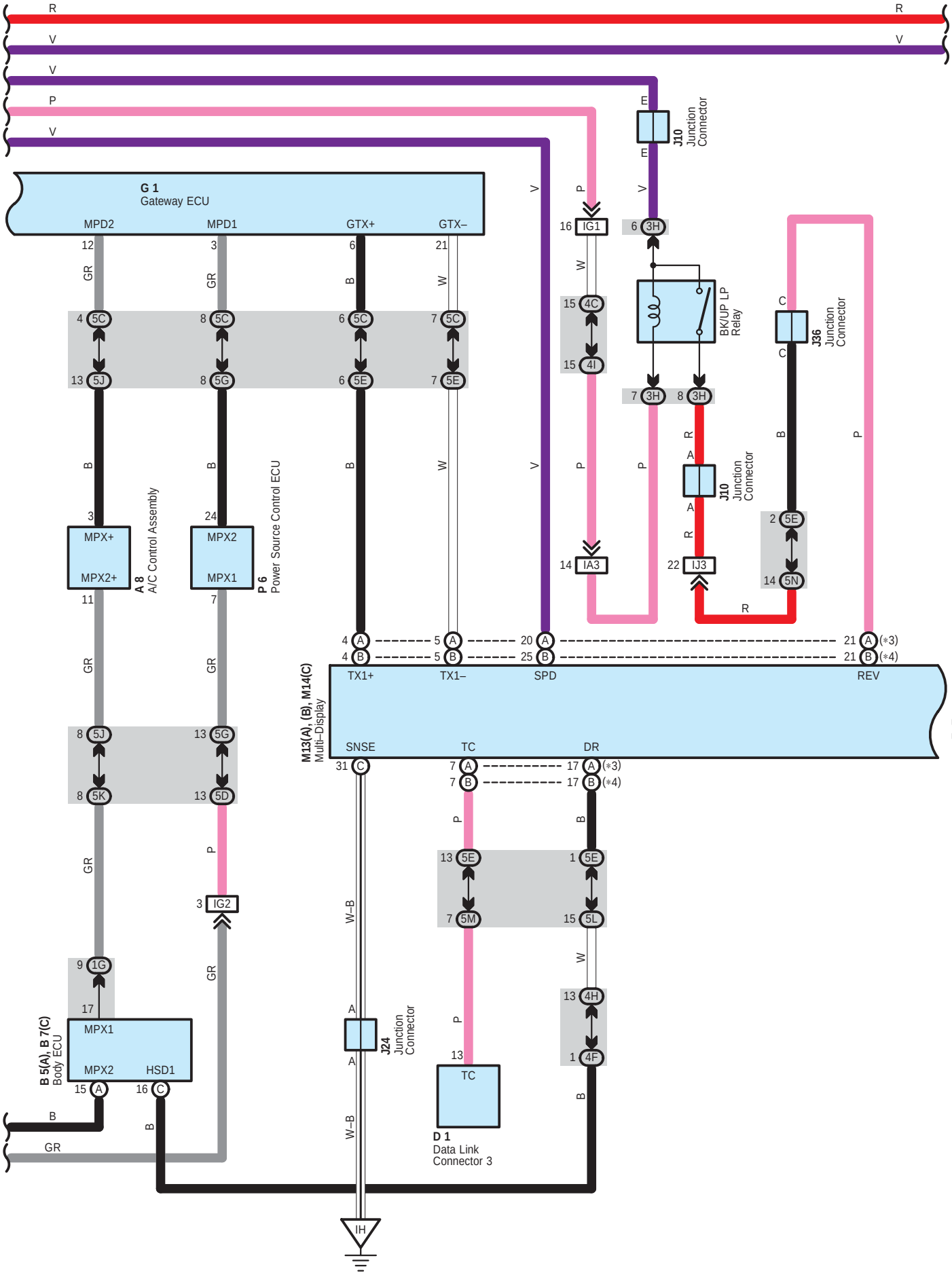

cardiagn.com

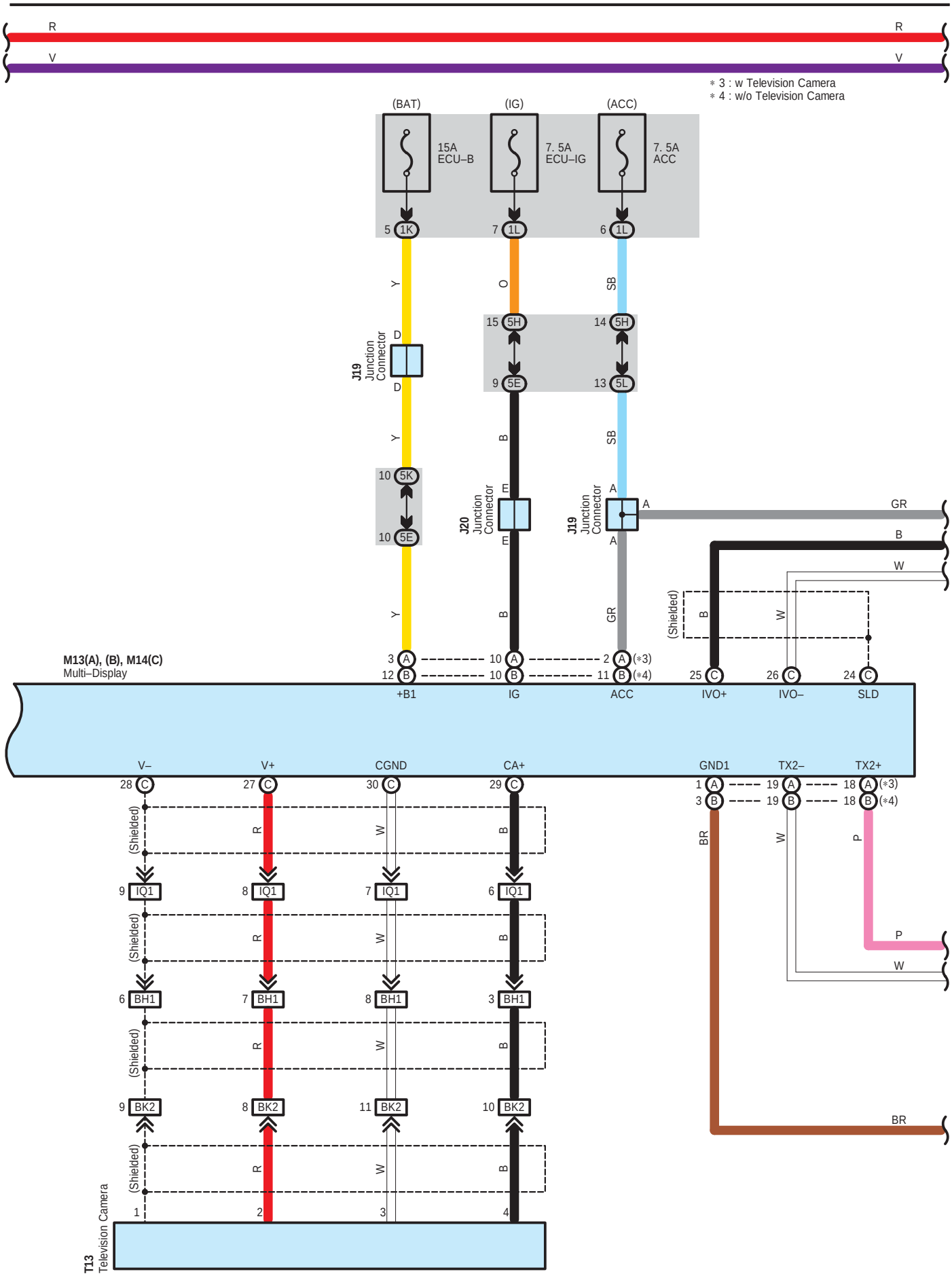

cardiagn.com

Multi–Display and Audio System for Built–in Amplifier

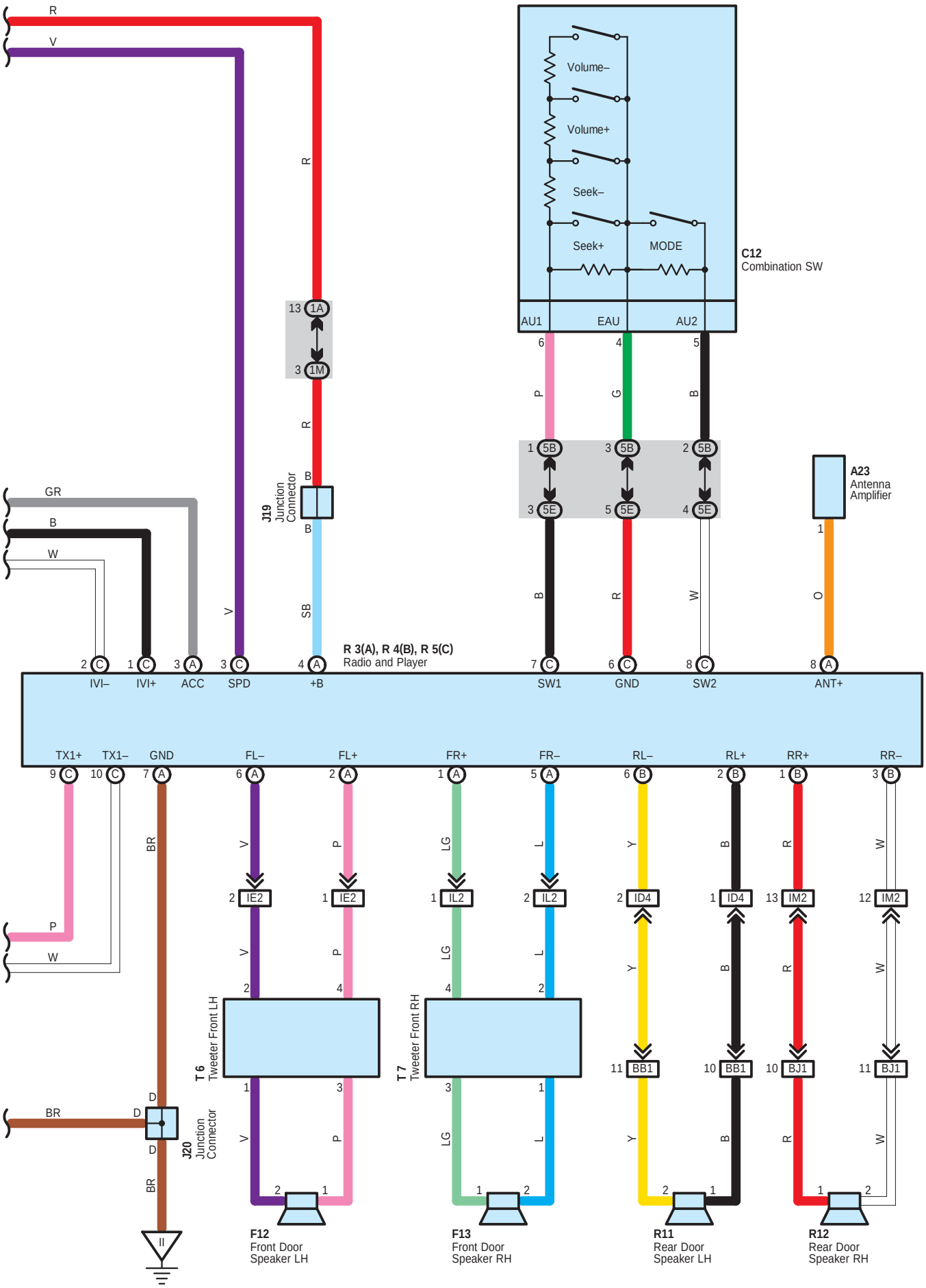

cardiagn.com

○ : Parts Location

Code		See Page	Code		See Page	Code		See Page
A6		46	J6		50	R4	B	51
A8		48	J10		50	R5	C	51
A23		48	J15		50	R11		54
B5	A	48	J16		50	R12		54
B7	C	48	J17		50	S7	A	51
B11		52	J18		50	S8	B	51
C10		49	J19		50	S9	C	51
C12		49	J20		50	S10	D	51
D1		49	J24		50	S11		51
E4	A	49	J25		50	T4		51
E6	C	49	J36		50	T5		51
E7	D	49	M13	A	50	T6		55
F12		53		B	50	T7		55
F13		53	M14	C	50	T11		51
F14		53	P6		51	T13		55
G1		49	P8		51			
H14		49	R3	A	51			

: Relay Blocks

Code	See Page	Relay Blocks (Relay Block Location)
3	22	Engine Room R/B (Engine Compartment Left)

: Junction Block and Wire Harness Connector

Code	See Page	Junction Block and Wire Harness (Connector Location)
1A	30	Engine Room Main Wire and Driver Side J/B (Lower Finish Panel)
1F	30	Instrument Panel Wire and Driver Side J/B (Lower Finish Panel)
1G		
1K	31	
1L		
1M		
3H	24	Engine Room Main Wire and Engine Room J/B (Engine Compartment Left)
4C	38	Instrument Panel Wire and Center Connector No.1 (Behind the Combination Meter)
4D		
4F		
4H		
4I		
4K		
4L		
5B	42	Instrument Panel Wire and Center Connector No.2 (Instrument Panel Brace RH)
5C		
5D		
5E		
5G		
5H		
5I		
5J		
5K		
5L		
5M		
5N		

cardiagn.com

: Connector Joining Wire Harness and Wire Harness

Code	See Page	Joining Wire Harness and Wire Harness (Connector Location)
EB1	56	Engine Wire and Engine Room Main Wire (Inside of the Engine Room R/B)
IA3	58	Engine Room Main Wire and Instrument Panel Wire (Upper Parts of Front Body Pillar LH)
ID4	58	Instrument Panel Wire and Floor Wire (Left Kick Panel)
IE2	58	Front Door LH Wire and Instrument Panel Wire (Left Kick Panel)
IG1	59	Instrument Panel Wire and Instrument Panel No.2 Wire (Behind the Combination Meter)
IG2		
II1	59	Engine Wire and Instrument Panel Wire (Behind the Glove Box)
IJ3	59	Engine Room Main Wire and Instrument Panel Wire (Behind the Glove Box)
IL2	59	Front Door RH Wire and Instrument Panel Wire (Right Kick Panel)
IM1	59	Instrument Panel Wire and Floor No.2 Wire (Right Kick Panel)
IM2		
IQ1	59	Floor
BB1	60	Rear Door No.2 Wire and Floor Wire (Left Center Pillar)
BH1	61	Back Door No.1 Wire and Floor Wire (Rear Side of Roof Panel)
BJ1	61	Rear Door No.1 Wire and Floor No.2 Wire (Right Center Pillar)
BK2	61	Back Door No.1 Wire and Back Door No.2 Wire (Rear Side of Roof Panel)

: Ground Points

Code	See Page	Ground Points Location
IH	58	Cowl Side Panel LH
II	58	Instrument Panel Brace LH

cardiagn.com

cardiagn.com

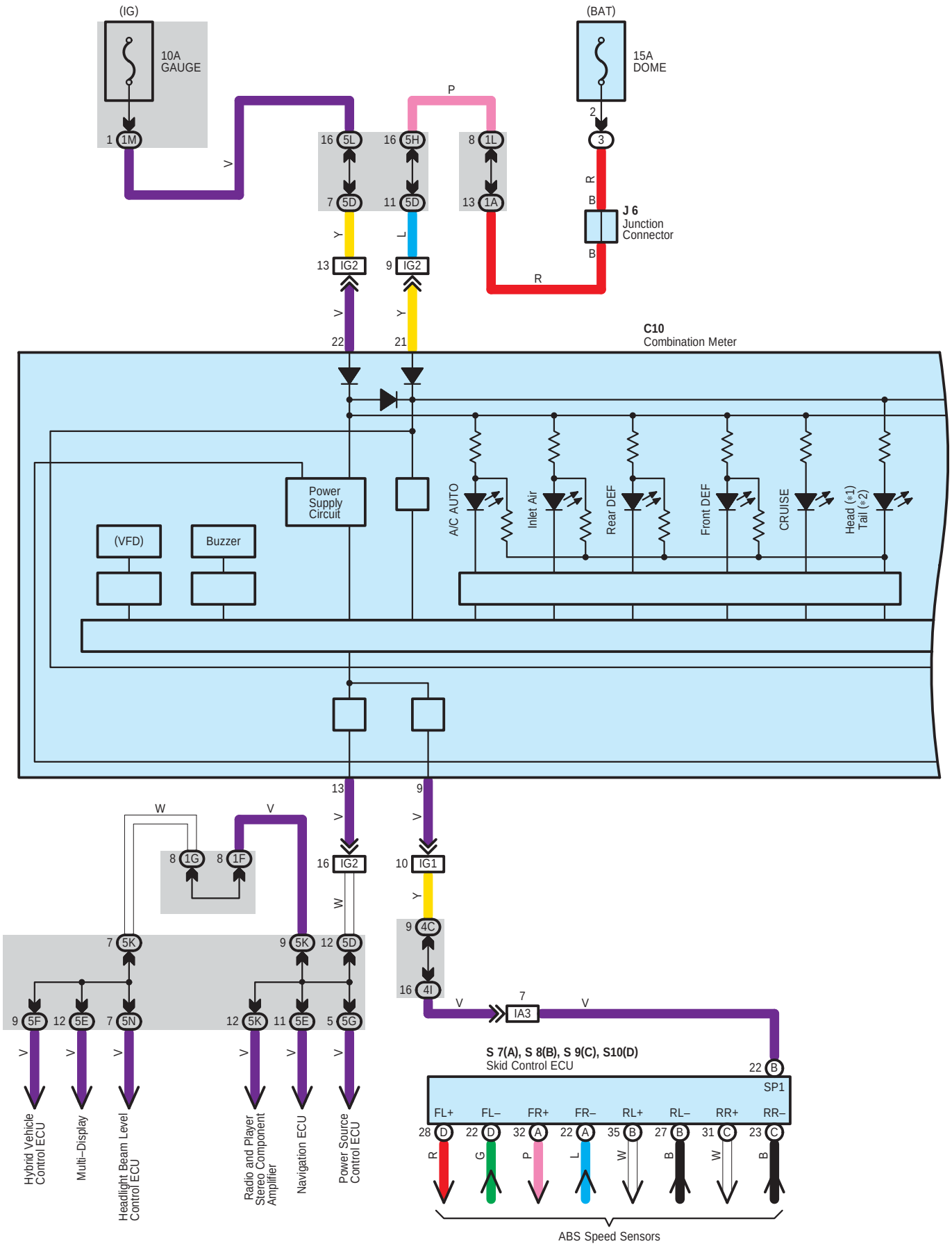

cardiagn.com

* 1 : USA
* 2 : Canada

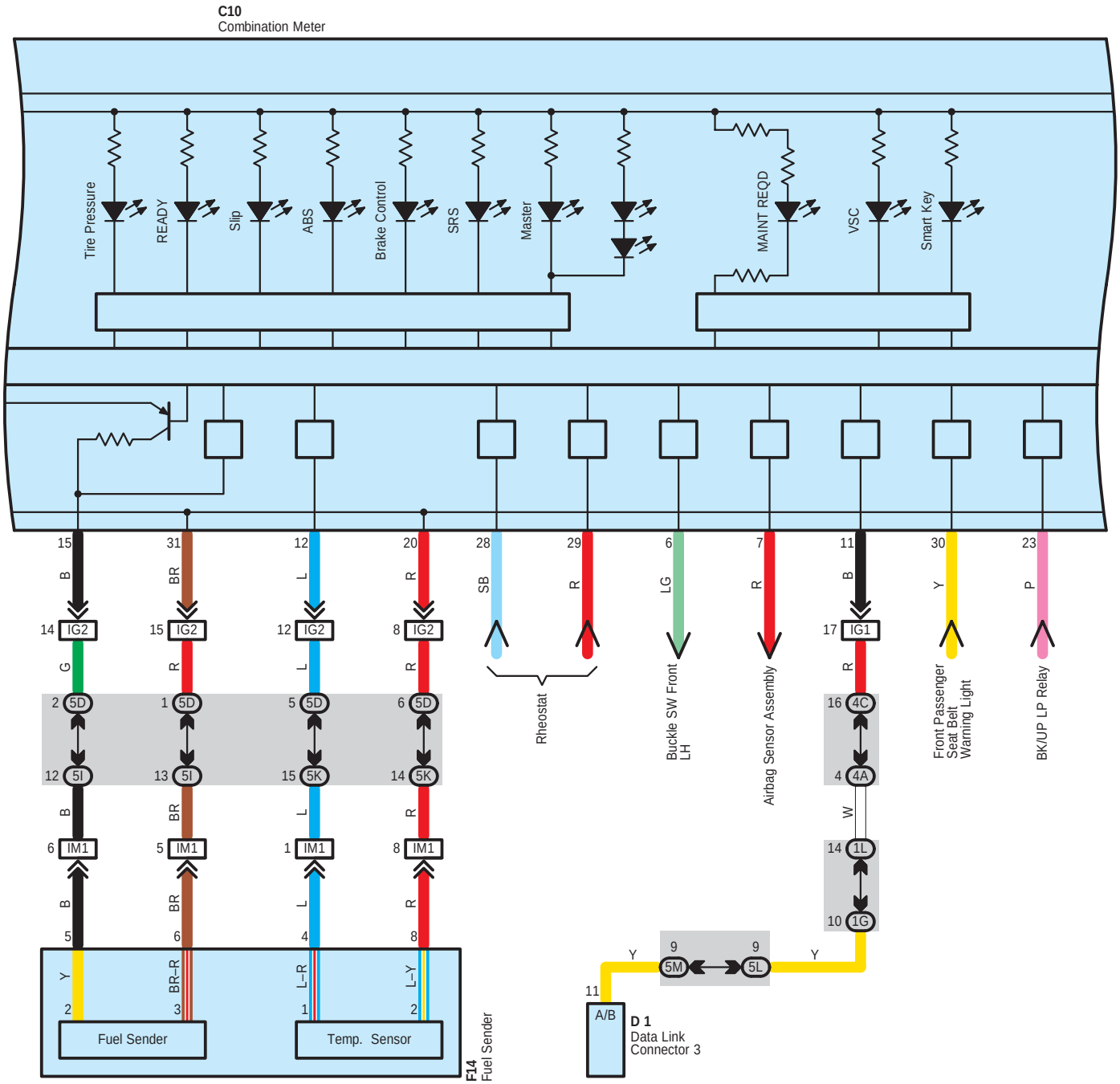

cardiagn.com

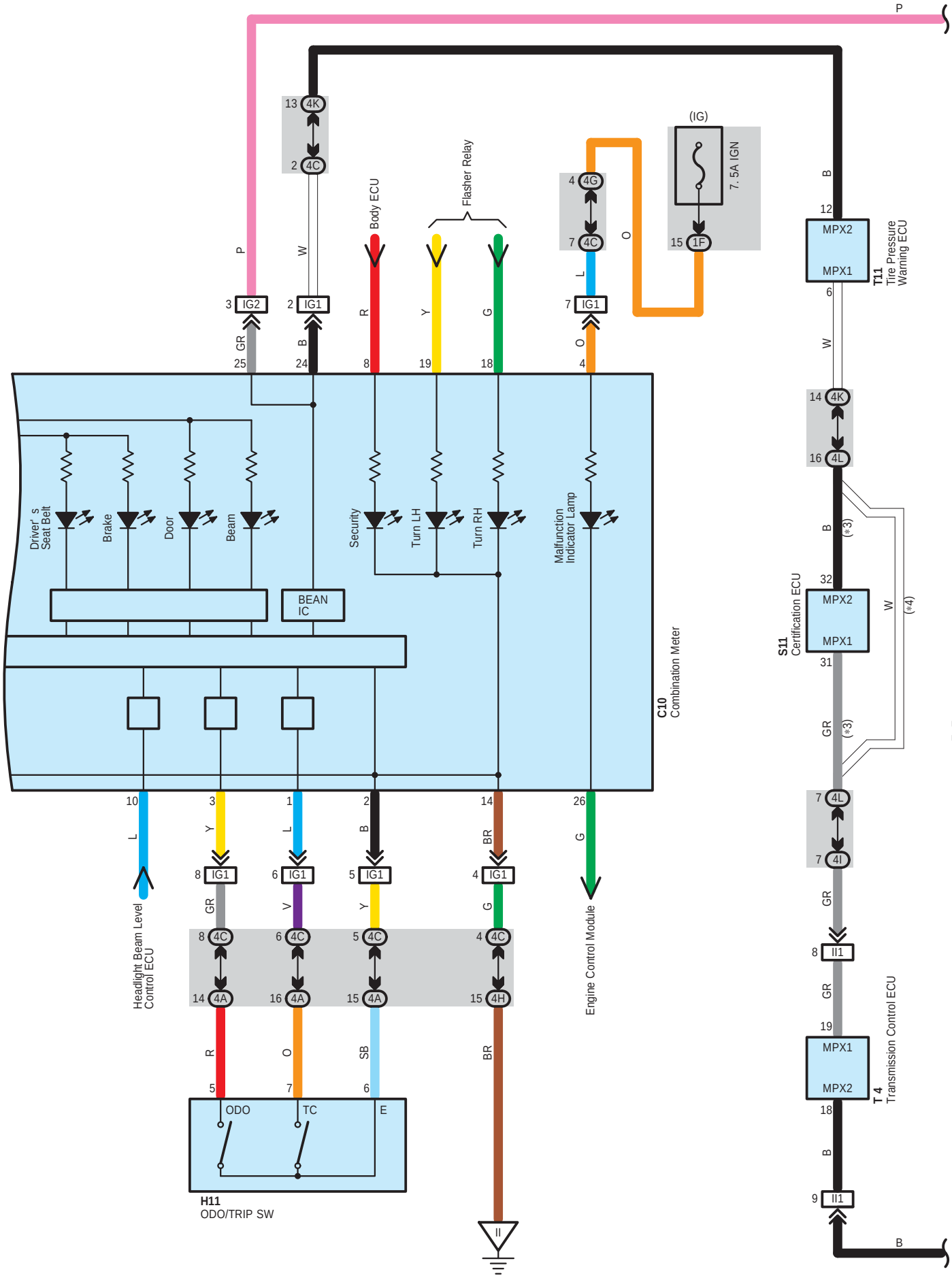

cardiagn.com

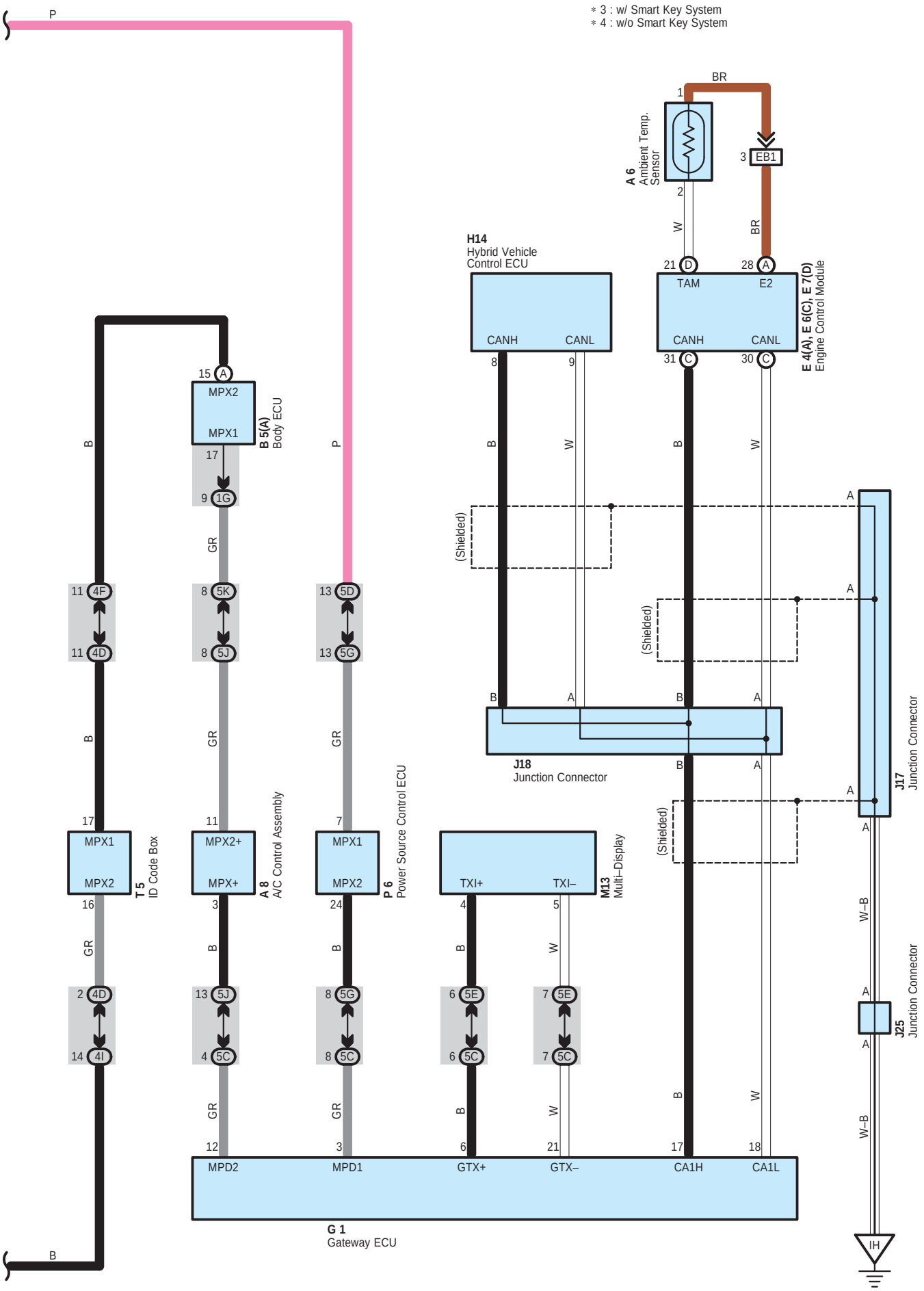

cardiagn.com

: **Parts Location**

Code		See Page	Code	See Page	Code		See Page
A6		46	G1	49	S7	A	51
A8		48	H11	49	S8	B	51
B5	A	48	H14	49	S9	C	51
C10		49	J6	50	S10	D	51
D1		49	J17	50	S11		51
E4	A	49	J18	50	T4		51
E6	C	49	J25	50	T5		51
E7	D	49	M13	50	T11		51
F14		53	P6	51			

: **Relay Blocks**

Code	See Page	Relay Blocks (Relay Block Location)
3	22	Engine Room R/B (Engine Compartment Left)

: **Junction Block and Wire Harness Connector**

Code	See Page	Junction Block and Wire Harness (Connector Location)
1A	30	Engine Room Main Wire and Driver Side J/B (Lower Finish Panel)
1F	30	Instrument Panel Wire and Driver Side J/B (Lower Finish Panel)
1G		
1L	31	
1M		
4A	38	Instrument Panel Wire and Center Connector No.1 (Behind the Combination Meter)
4C		
4D		
4F		
4G		
4H		
4I		
4K		
4L		
5C	42	Instrument Panel Wire and Center Connector No.2 (Instrument Panel Brace RH)
5D		
5E		
5F		
5G		
5H		
5I		
5J		
5K		
5L		
5M		
5N		

: **Connector Joining Wire Harness and Wire Harness**

Code	See Page	Joining Wire Harness and Wire Harness (Connector Location)
EB1	56	Engine Wire and Engine Room Main Wire (Inside of the Engine Room R/B)
IA3	58	Engine Room Main Wire and Instrument Panel Wire (Upper Parts of Front Body Pillar LH)
IG1	59	Instrument Panel Wire and Instrument Panel No.2 Wire (Behind the Combination Meter)
IG2		
II1	59	Engine Wire and Instrument Panel Wire (Behind the Glove Box)
IM1	59	Instrument Panel Wire and Floor No.2 Wire (Right Kick Panel)

cardiagn.com

▽ : **Ground Points**

Code	See Page	Ground Points Location
IH	58	Cowl Side Panel LH
II	58	Instrument Panel Brace LH

cardiagn.com

Radiator Fan and Condenser Fan

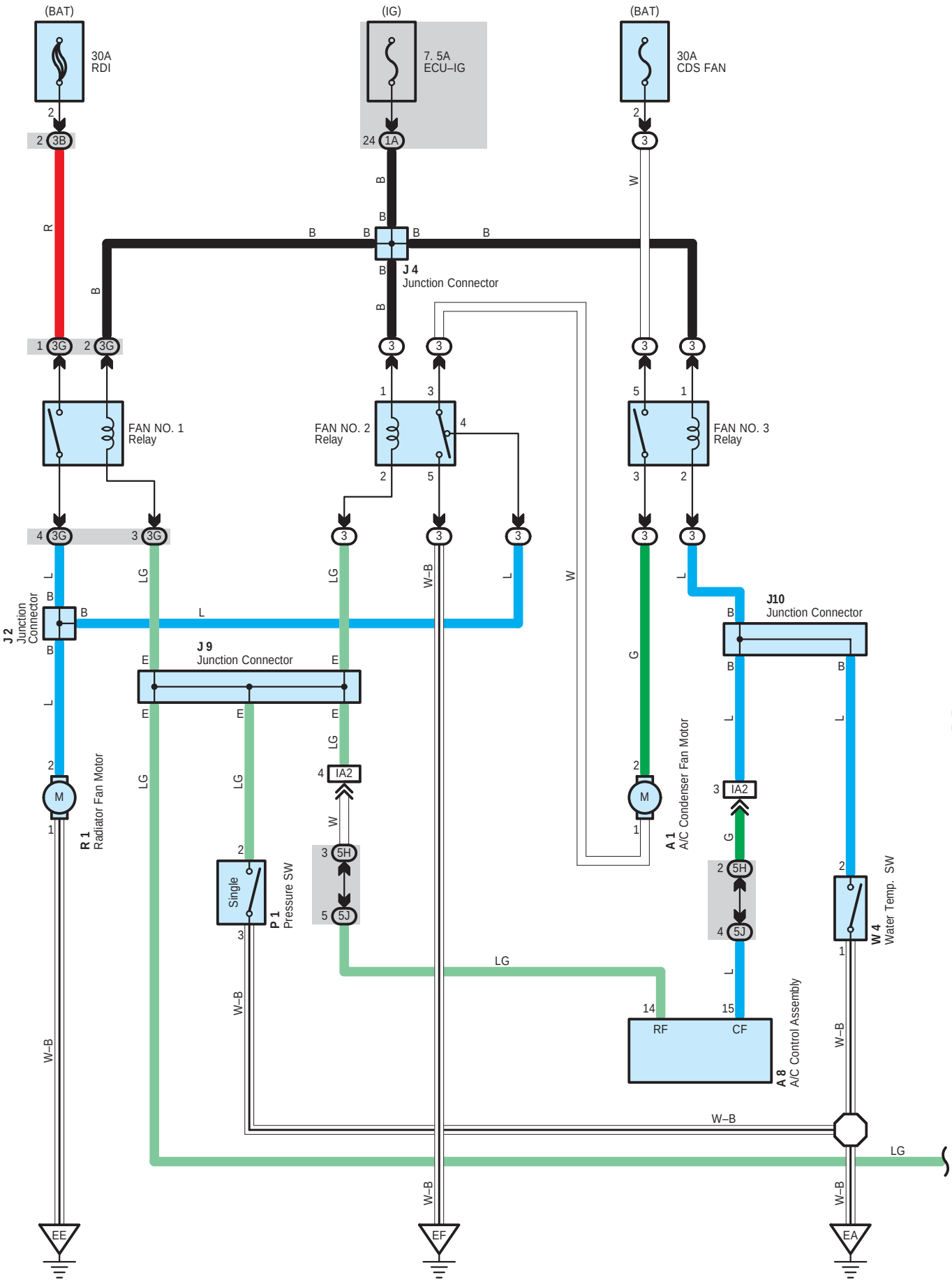

cardiagn.com

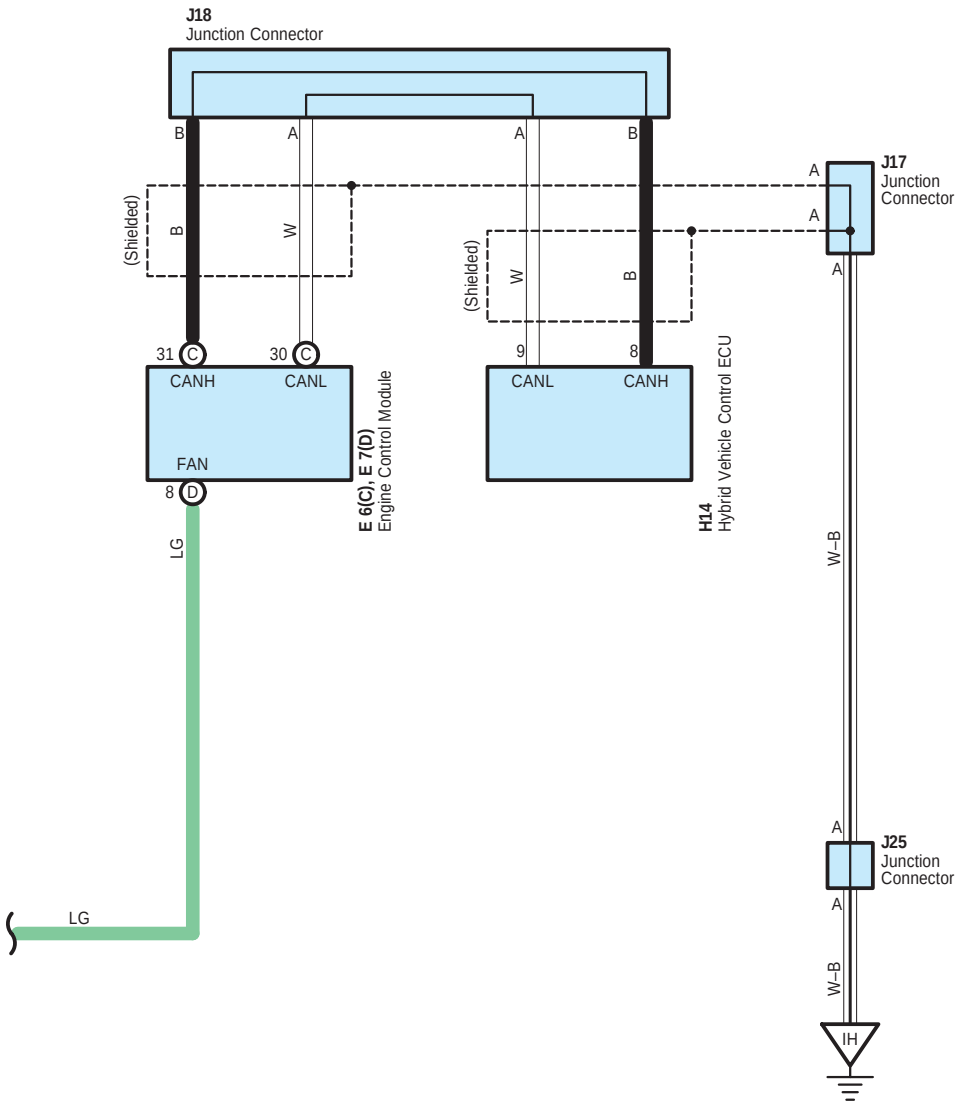

cardiagn.com

Radiator Fan and Condenser Fan

System Outline

The radiator fan motor and A/C condenser fan motor operate according to the water temp. SW (Inverter), A/C single pressure SW, engine coolant temp. and the A/C system condition. The FAN NO.1 relay, FAN NO.2 relay, FAN NO.3 relay are turned on/off, to operate the fan motors at low speed (In series), or high speed (In parallel).

1. Low Speed operation

When the water temp. SW (Inverter) is on and/or A/C control assembly is in operation, the radiator fan motor and A/C condenser fan motor operate at low speed.

2. High Speed Operation

When the pressure SW (Single) is on, engine control module and/or A/C control assembly, the radiator fan motor operate and A/C condenser fan motor operates at high speed.

: Parts Location

Code		See Page	Code	See Page	Code	See Page
A1		46	J2	47	J18	50
A8		48	J4	47	J25	50
E6	C	49	J9	50	P1	47
E7	D	49	J10	50	R1	47
H14		49	J17	50	W4	47

: Relay Blocks

Code	See Page	Relay Blocks (Relay Block Location)
3	22	Engine Room R/B (Engine Compartment Left)

: Junction Block and Wire Harness Connector

Code	See Page	Junction Block and Wire Harness (Connector Location)
1A	30	Engine Room Main Wire and Driver Side J/B (Lower Finish Panel)
3B	23	Engine Room Main Wire and Engine Room J/B (Engine Compartment Left)
3G	24	
5H	42	Instrument Panel Wire and Center Connector No.2 (Instrument Panel Brace RH)
5J		

: Connector Joining Wire Harness and Wire Harness

Code	See Page	Joining Wire Harness and Wire Harness (Connector Location)
IA2	58	Engine Room Main Wire and Instrument Panel Wire (Upper Parts of Front Body Pillar LH)

: Ground Points

Code	See Page	Ground Points Location
EA	56	Right Side of the Fender Apron
EE	56	Left Side of the Suspension Tower
EF		
IH	58	Cowl Side Panel LH

cardiagn.com

cardiagn.com

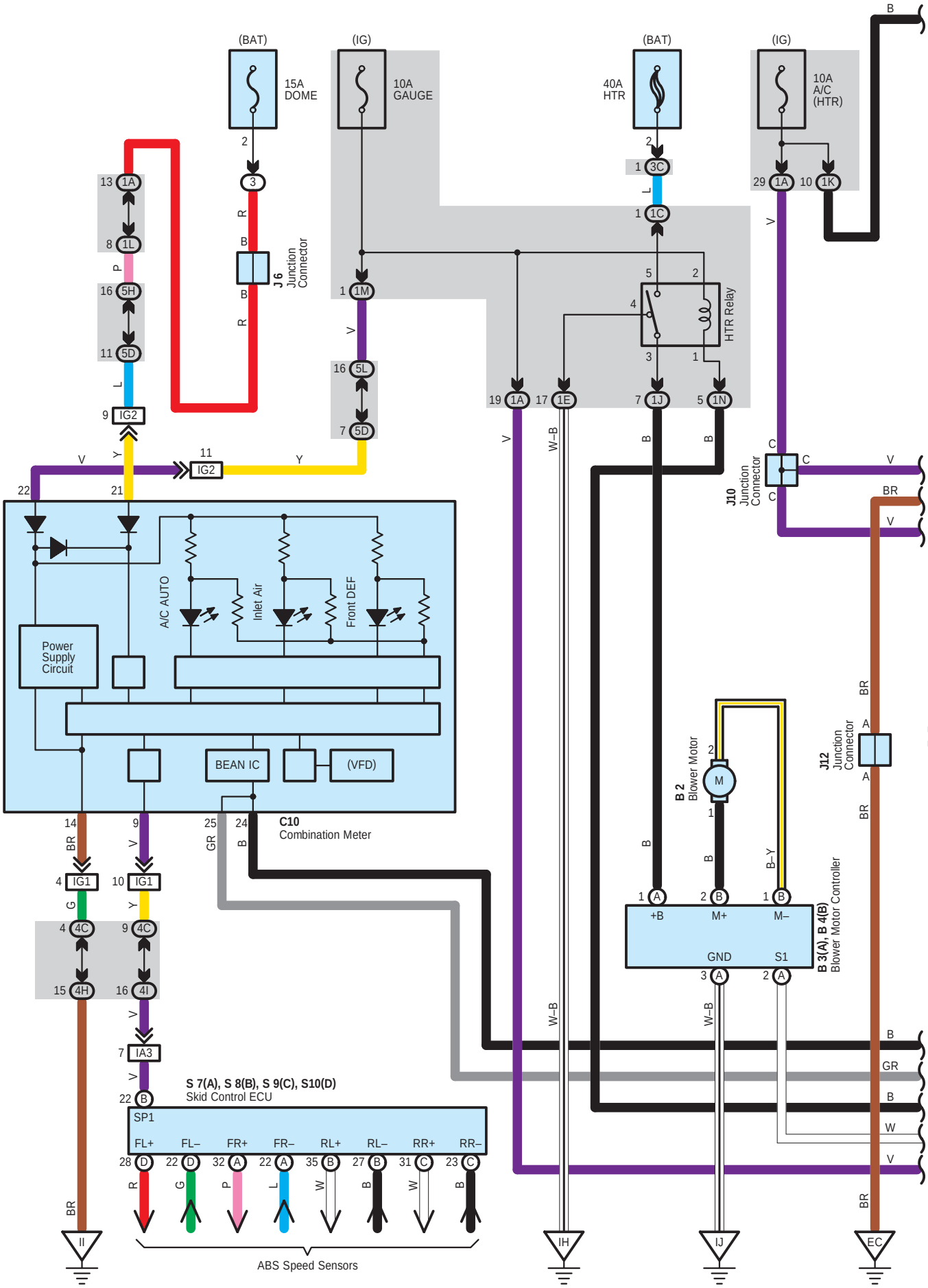

cardiagn.com

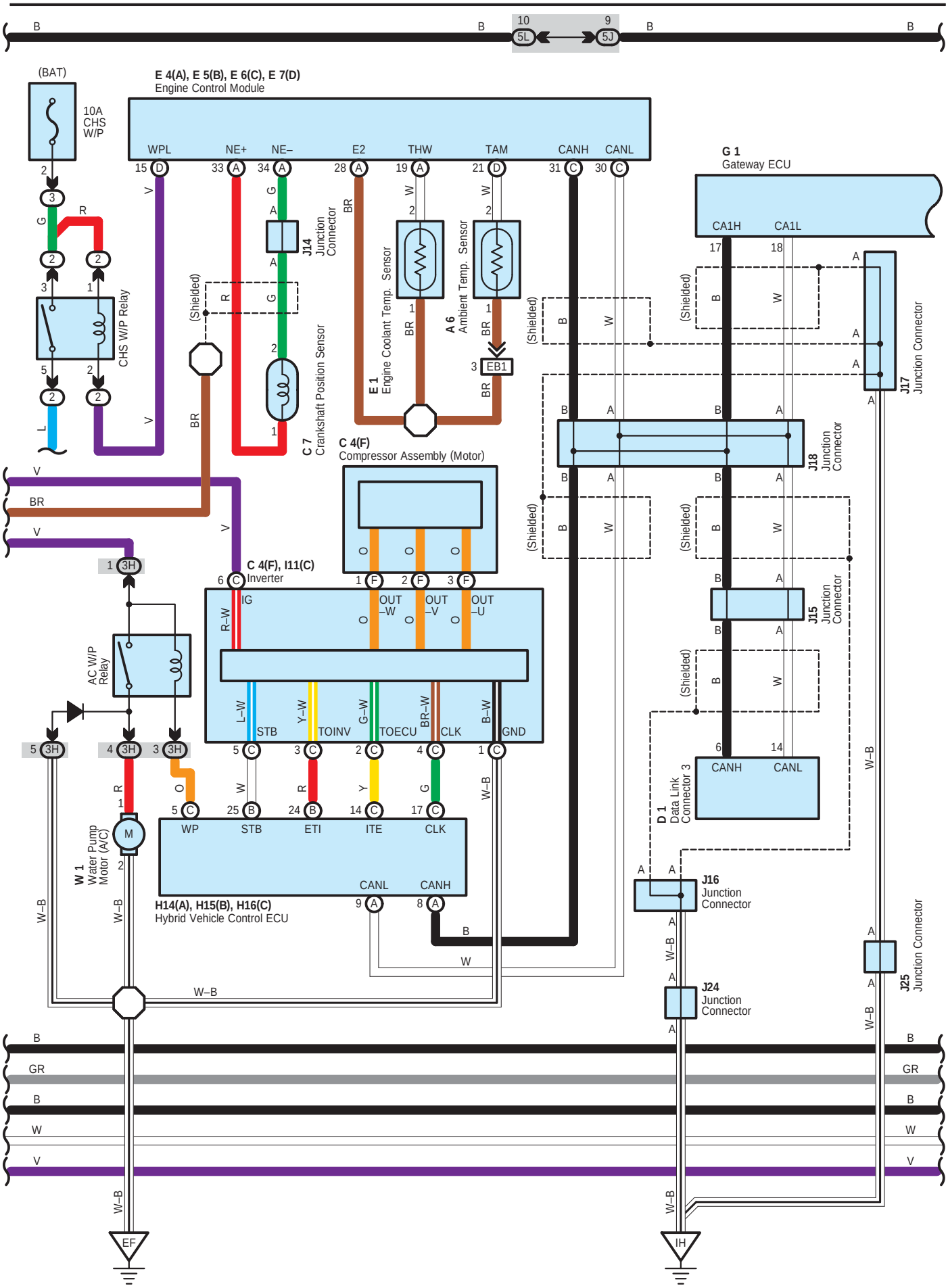

cardiagn.com

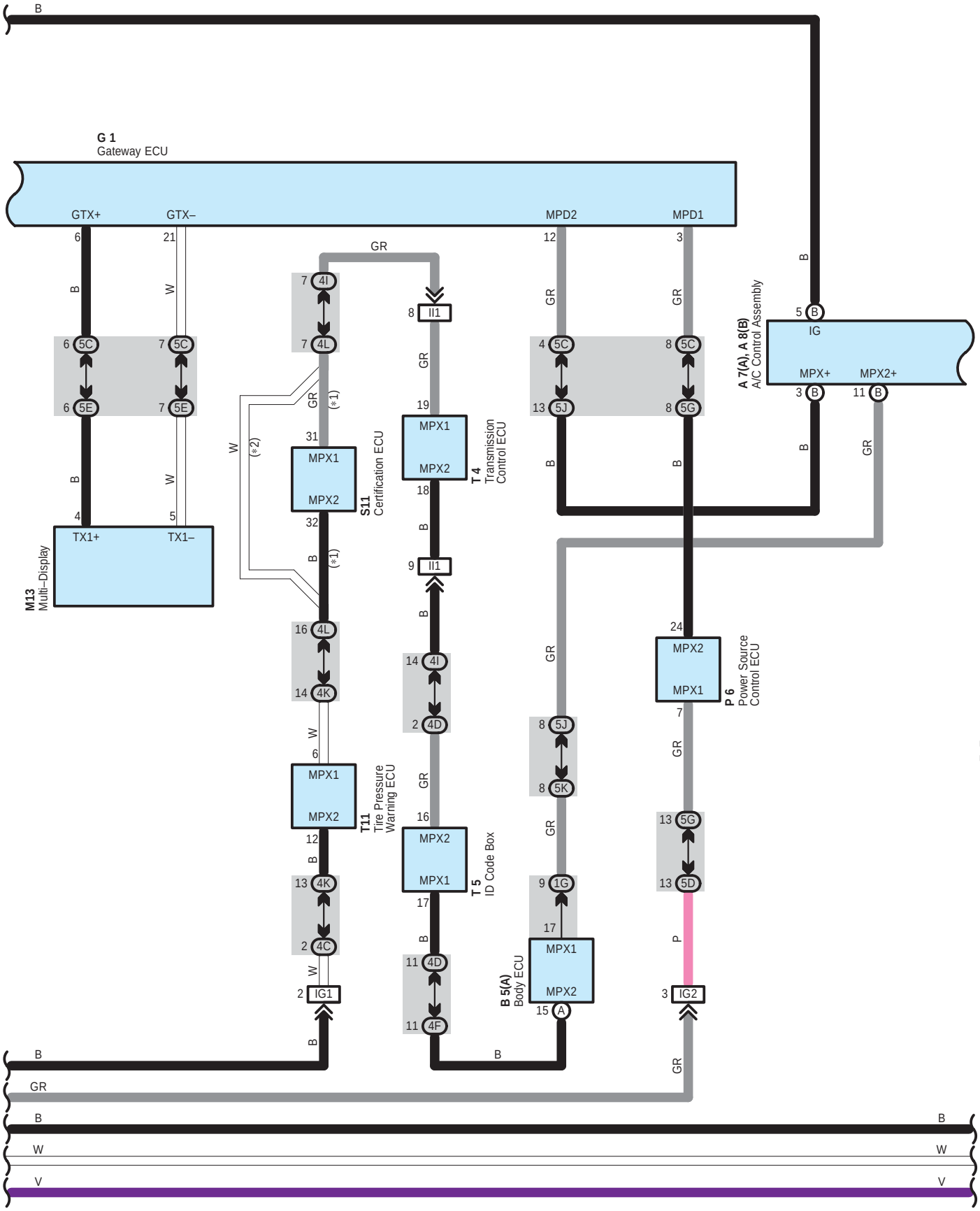

cardiagn.com

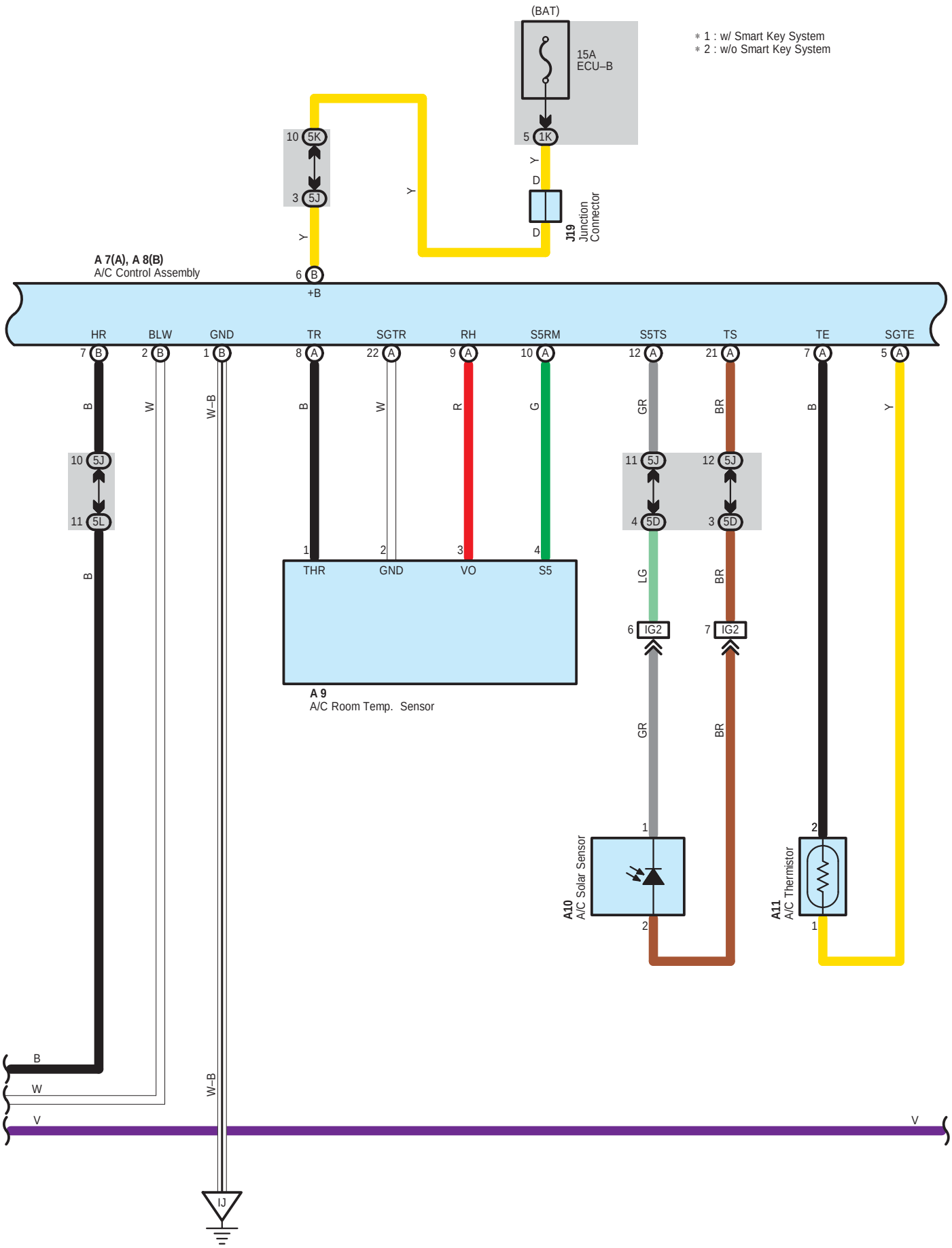

cardiagn.com

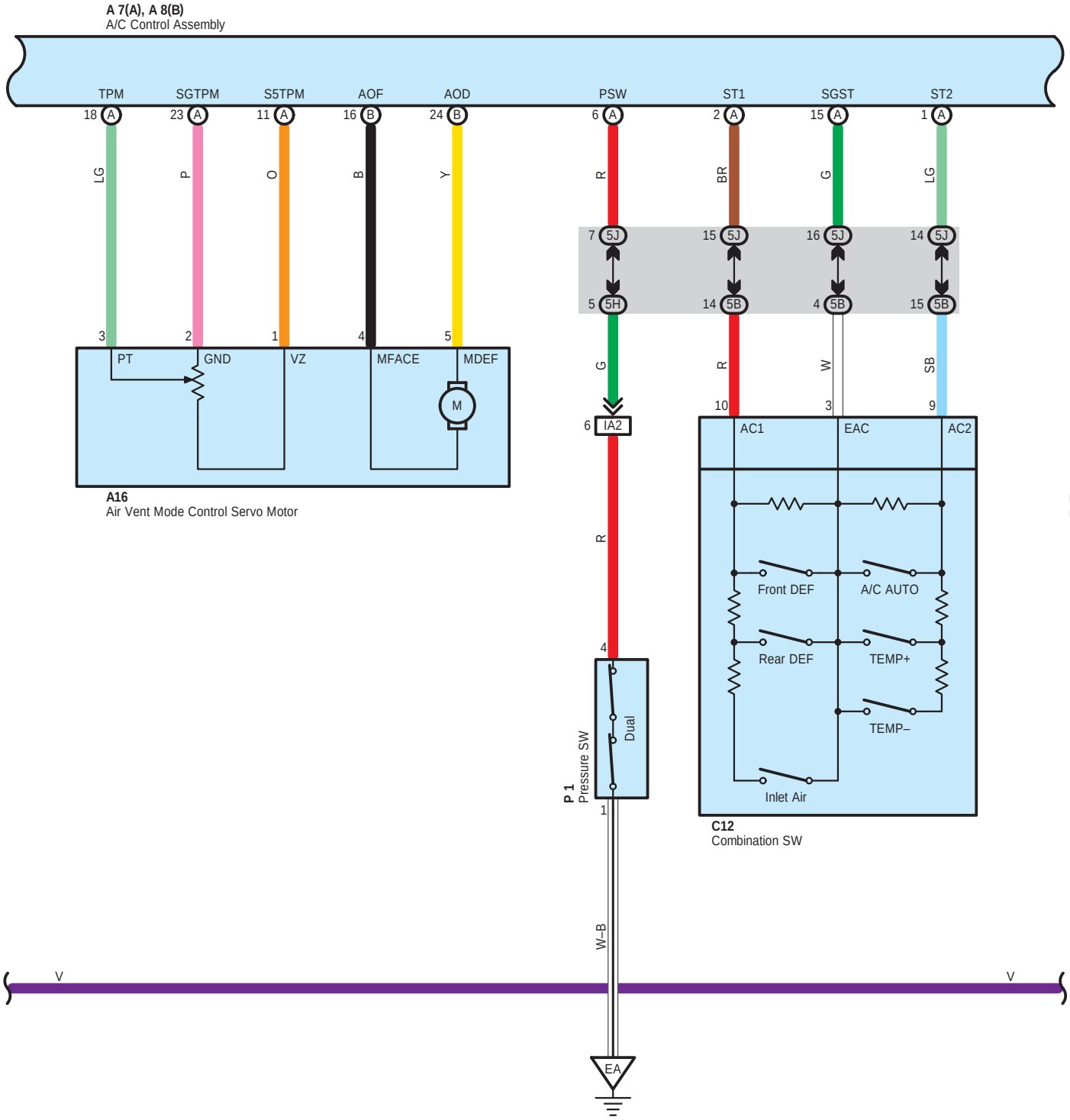

cardiagn.com

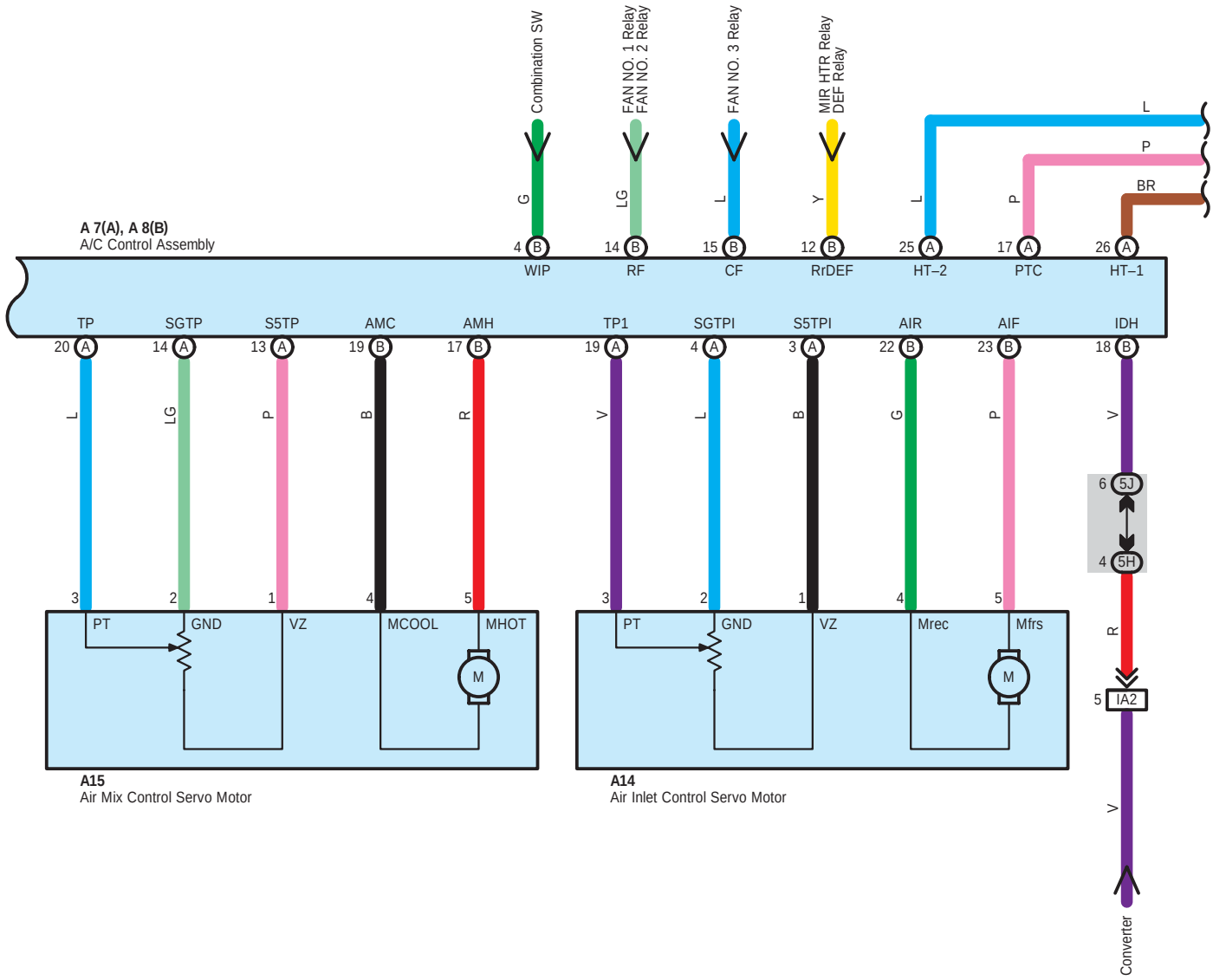

cardiagn.com

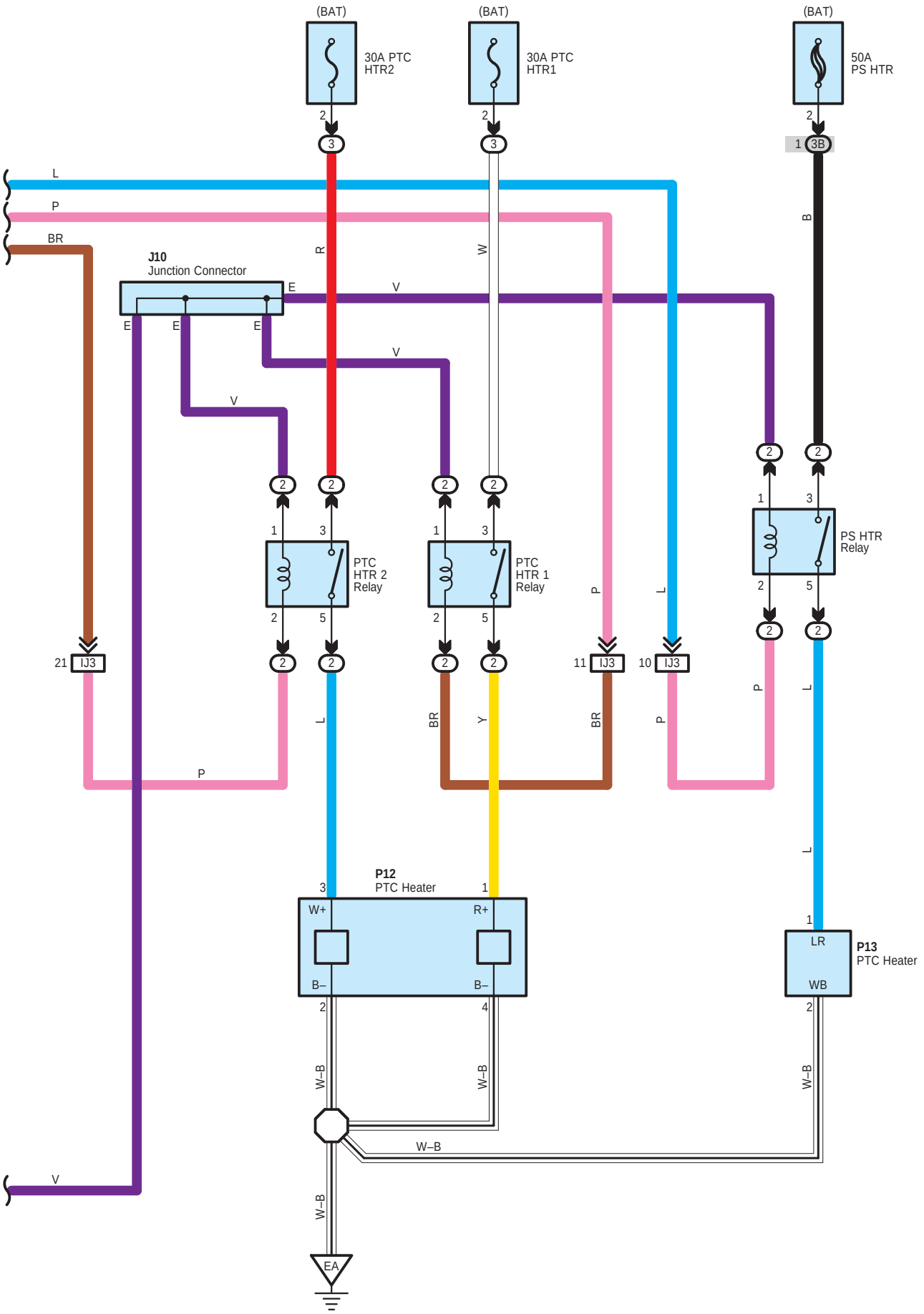

cardiagn.com

System Outline

Air conditioning system operates when SW of multi–display or that of steering wheel is turned on. Turning on the SW sends signal to A/C control assembly, running the air conditioning system.

1. Heater Blower Operation

Manual operation

When the blower speed is set to a certain level using the blower control SW, the A/C control assembly sends the signals to the blower control to control the blower motor speed.

Auto operation

When the auto SW is pushed, the A/C control assembly calculates necessary blower speed from setting of SWs and input of the sensors and sends the signals to the blower control to automatically control the blower motor speed.

2. Air Inlet Control Servo Motor Control

When the FRESH/RECIRC select SW is set to RECIRC, the air inlet control servo motor starts rotating to move the damper toward the RECIRC side. The damper position is detected by the TERMINAL TPI of the A/C control assembly. The motor continuously rotates until the damper reaches its stop position. When the FRESH/RECIRC select SW is set to FRESH, the air inlet control servo motor starts rotating to move the damper toward the FRESH side. The damper position is detected by the TERMINAL TPI of the A/C control assembly. The motor continuously rotates until the damper reaches its stop position.

In auto mode, A/C control assembly controls the damper to move to the best position for the conditions without operating the mode select SW.

3. Air Vent Mode Control Servo Motor Control

When the mode select SW is pushed, the ECU in the A/C control assembly activates the air vent mode control servo motor. The servo motor rotates to the position (FACE, BI–LEVEL, FOOT, FOOT/DEF, DEF) selected by using the mode select SW, and moves the damper.

In auto mode, A/C control assembly controls the damper to move to the best position for the conditions without operating the mode select SW.

4. Air Mix Control Servo Motor Control

Based on the set temperature by the temperature control SW, the ECU in the A/C control assembly sends a signal to the air mix control servo motor. This signal drives the motor to reach the temperature set by the temperature control SW, and moves the film damper.

5. Humidity Sensor Control

A/C control assembly detects humidity in passenger room when A/C is turned on, with humidity detecting function of A/C room temp. sensor and controls to dehumidify for comfortable condition

6. Air Conditioning Operation

A/C control assembly calculates target cooled temperature from information such as that of operating SWs, room temperature, humidity, ambient temperature and insolation to have target running speed of compressor assembly (Motor). The calculated control signal is sent to inverter to drive compressor assembly (Motor) (Electric motor) with control of inverter, resulting in operating A/C.

cardiagn.com

○ : **Parts Location**

Code		See Page	Code		See Page	Code		See Page
A6		46	E1		46	J19		50
A7	A	48	E4	A	49	J24		50
A8	B	48	E5	B	49	J25		50
A9		48	E6	C	49	M13		50
A10		48	E7	D	49	P1		47
A11		48	G1		49	P6		51
A14		48	H14	A	49	P12		51
A15		48	H15	B	49	P13		51
A16		48	H16	C	49	S7	A	51
B2		48	I11	C	47	S8	B	51
B3	A	48	J6		50	S9	C	51
B4	B	48	J10		50	S10	D	51
B5	A	48	J12		50	S11		51
C4	F	46	J14		50	T4		51
C7		46	J15		50	T5		51
C10		49	J16		50	T11		51
C12		49	J17		50	W1		47
D1		49	J18		50			

▭ : **Relay Blocks**

Code	See Page	Relay Blocks (Relay Block Location)
2	28	Engine Room R/B No.2 (Right Side of Reserve Tank)
3	22	Engine Room R/B (Engine Compartment Left)

cardiagn.com

: **Junction Block and Wire Harness Connector**

Code	See Page	Junction Block and Wire Harness (Connector Location)
1A	30	Engine Room Main Wire and Driver Side J/B (Lower Finish Panel)
1C		
1E	30	Instrument Panel Wire and Driver Side J/B (Lower Finish Panel)
1G		
1J		
1K	31	
1L		
1M		
1N		
3B	23	Engine Room Main Wire and Engine Room J/B (Engine Compartment Left)
3C		
3H	24	
4C	38	Instrument Panel Wire and Center Connector No.1 (Behind the Combination Meter)
4D		
4F		
4H		
4I		
4K		
4L		
5B	42	Instrument Panel Wire and Center Connector No.2 (Instrument Panel Brace RH)
5C		
5D		
5E		
5G		
5H		
5J		
5K		
5L		

: **Connector Joining Wire Harness and Wire Harness**

Code	See Page	Joining Wire Harness and Wire Harness (Connector Location)
EB1	56	Engine Wire and Engine Room Main Wire (Inside of the Engine Room R/B)
IA2	58	Engine Room Main Wire and Instrument Panel Wire (Upper Parts of Front Body Pillar LH)
IA3		
IG1	59	Instrument Panel Wire and Instrument Panel No.2 Wire (Behind the Combination Meter)
IG2		
II1	59	Engine Wire and Instrument Panel Wire (Behind the Glove Box)
IJ3	59	Engine Room Main Wire and Instrument Panel Wire (Behind the Glove Box)

: **Ground Points**

Code	See Page	Ground Points Location
EA	56	Right Side of the Fender Apron
EC	56	Engine Block
EF	56	Left Side of the Suspension Tower
IH	58	Cowl Side Panel LH
II	58	Instrument Panel Brace LH
IJ	58	Instrument Panel Brace RH

cardiagn.com