Reference Manual

www.bmwcenternet.com

The Ultimate Driving Machine®

BMW
Technical Training

Chassis Dynamics

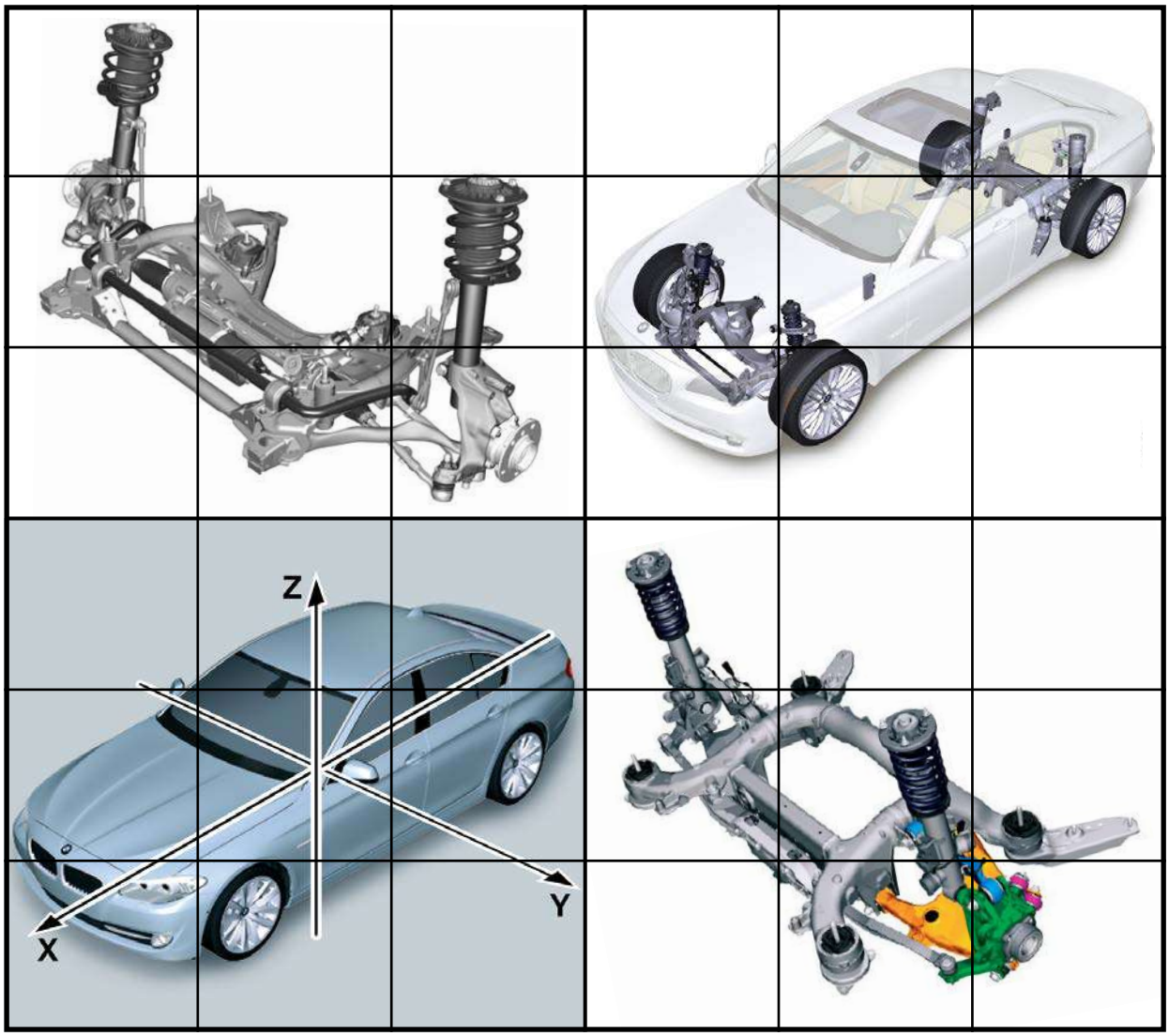

BMW of North America, LLC
Technical Training
ST1115
8/1/12

cardiagn.com

Information Status: August 01, 2012

Course Code: ST1115 Chassis Dynamics

The information contained in the training course materials is solely intended for participants in this training course conducted by BMW Group Technical Training Centers, or BMW Group Contract Training Facilities.

This training manual or any attached publication is not intended to be a complete and all inclusive source for repair and maintenance data. It is only part of a training information system designed to assure that uniform procedures and information are presented to all participants.

For changes/additions to the technical data, repair procedures, please refer to the current information issued by BMW of North America, LLC, Technical Service Department.

This information is available by accessing TIS at www.bmwcenternet.com.

cardiagn.com

© 2012 BMW of North America, LLC. The BMW name and logo are registered trademarks. All rights reserved.

Table of Contents

BMW Suspension Systems

Subject **Page**

Introduction **4**

BMW Front Suspension History **6**
Single-joint Spring Strut Front Axle 6
E46 / E85 Front Suspension 7
Adjustments 8
Double Pivot Spring Strut Front Axle 9
Double Pivot Operation 11
Double Pivot Front Axle Configurations 12
E38 Front Suspension 13
E6x Front Suspension 14

Current Front Axles **15**
Double-pivot Front Axle 15
E8x / E9x Front Suspension 15
E89 Front Suspension 17
Steering Offset on the E89 18
F30 Front Suspension 20
Sport Activity Vehicles (Except E70) Front Suspension 22
F25 Front Axle with EPS 23
E84 Front Suspension 24
Adjustments - Double-Pivot Front Axle 25
Double Wishbone Front Axle 26
E7x Front Suspension 26
F0x / F1x Front Suspension 28
SAI - Virtual Pivot Point on Double Wishbone Front Axle 30
Adjustments - Double Wishbone Front Axle 32

Rear Suspension History **34**
Development of BMW Rear Axles 35
HA1 - Semi-Trailing Arm Axle 36
HA2 - Semi-Trailing Arm Axle (with Track Link) 37

cardiagn.com

Initial Print Date: 08/12 Revision Date:

Subject **Page**

HA3 - Central “C” Link 38
E46 Rear Suspension 38
E83 Rear Suspension 39
E85 Rear Suspension 40
Rear Suspension Adjustments (HA3 Central Link Axle) 41
Rear Toe 41
Rear Camber 41
Integral Axle (III and IV) 42
E31 Rear Suspension (Integral III) 42
E38 / E39 Rear Suspension (Integral IV) 43
E39 / E53 Rear Suspension (Integral IV) 44
E6x Rear Suspension (Integral IV) 46
Rear Suspension Adjustments (Integral Rear Axle III/IV) 47

Current Rear Axles 49
HA3 - Central “C” Link - E89 Rear Suspension 49
HA 5 Rear Axle 50
HA 5 Rear Axle Layout 51
Advantages 53
Manufacturing Costs 53
Light Construction 53
Production 53
Kinematics 53
Crash Requirements 54
Rigidity / Acoustics 54
Setting 55
F25 Rear Suspension 56
F30 Rear Suspension 57
E84 Rear Suspension 58
Integral IV - E7x Rear Suspension 60
Integral V - F0x / F1x Rear Suspension 63
Design Features 63
Kinematics and Elastokinematics 63
New Challenge for the Integral Rear Axle -
Integral Active Steering 64
Suspension Options (Integral V) 69

cardiagn.com

BMW Suspension Systems

Model: All

Production: All

OBJECTIVES

After completion of this module you will be able to:

- Identify BMW Suspension Systems.
- Understand BMW Suspension System design.
- Locate suspension adjustments on the front and rear axle.

cardiagn.com

Introduction

One of the most overlooked features on a vehicle is the chassis and suspension system. Most of the time, people who buy new vehicles are initially attracted to the style of the body. Some buyers are interested in the performance of the engine or the convenience features such as the audio system etc.

BMW vehicles are well known for having “cutting edge” engine technology. However, in order to be known as the “Ultimate Driving Machine”, it is the chassis that must provide the driver with comfort, safety and superior “road-holding” performance.

Since the most early development period of the automobile, chassis designs have had to keep up with the demands of the engine. The chassis and suspension system designs have also evolved with increasing demands of the driver and the road conditions.

cardiagn.com

As vehicles get more powerful and demands for ride comfort and driving safety rise, so do the demands placed on the modern chassis.

Requirements of a modern steering system:

- Ensure steerability in accordance with the driving conditions.
- Provide function, comfort and safety.
- Dampen vibration.
- Convey a confident “road feel” by transferring road surface information to the driver.
- Allow sufficient steering wheel return after cornering.

The focus of this training module will be on BMW steering and suspension systems. This will include all front and rear axle designs as well as adjustments where applicable.

cardiagn.com

BMW Front Suspension History

here are three basic front axle designs used on BMW vehicles:

- Single-Joint Spring Strut Front Axle
- Double-Pivot Spring Strut Front Axle
- Double Wishbone Front Axle

Single-joint Spring Strut Front Axle

The “Single-Joint” design has been in use since the introduction of the E30. It was used on the E30, E36, E46, E85 and the E86 vehicles. The design includes a steel axle carrier which allows the mounting of the engine mounts, steering rack, sway bar and lower control arm mount.

The axle carrier is bolted to the body structure via 4 bolts. There are two locating dowels which provide proper axle location as well as added strength. The “sickle-shaped” lower control arm is attached to the axle carrier via a ball joint, there is also an additional rubber mount which is attached to the body. The lower control arm also provides the “single-pivot” point for the steering knuckle.

The single-joint design has advantages due to it’s low weight and compact design. The geometry of the single pivot allows for a small positive steering offset, but the size of the brake rotor is ultimately limited. However, it is ideally suited for smaller cars (such as the early 3-series).

E46 Single-Joint Spring Strut Front Axle

Detail of Single-Joint Spring Strut Front Suspension

cardiagn.com

E46 / E85 Front Suspension

The front suspension on the E46 and E85 is based on the single-joint front suspension used on the previous 3-series models (E30/E36). This suspension includes some design changes to enhance ride quality and handling characteristics.

The changes to the front suspension are as follows:

- A new forged aluminum lower control arm (except Xi models). The lighter arm offers a lower unsprung mass.
- The rear lower control arm bushing is hydraulic.
- Hollow strut piston rods for reduced weight.
- The steering knuckles are “press-fit” to the strut tubes.
- The overall caster angle has been increased to improve “straight-line” stability.
- The track has been widened for improved cornering ability.
- The brake dust shields are made from aluminum.

Altogether there is a weight reduction of 5.72 pounds of “un-sprung” weight which enhances ride comfort and handling.

E46 Front Suspension

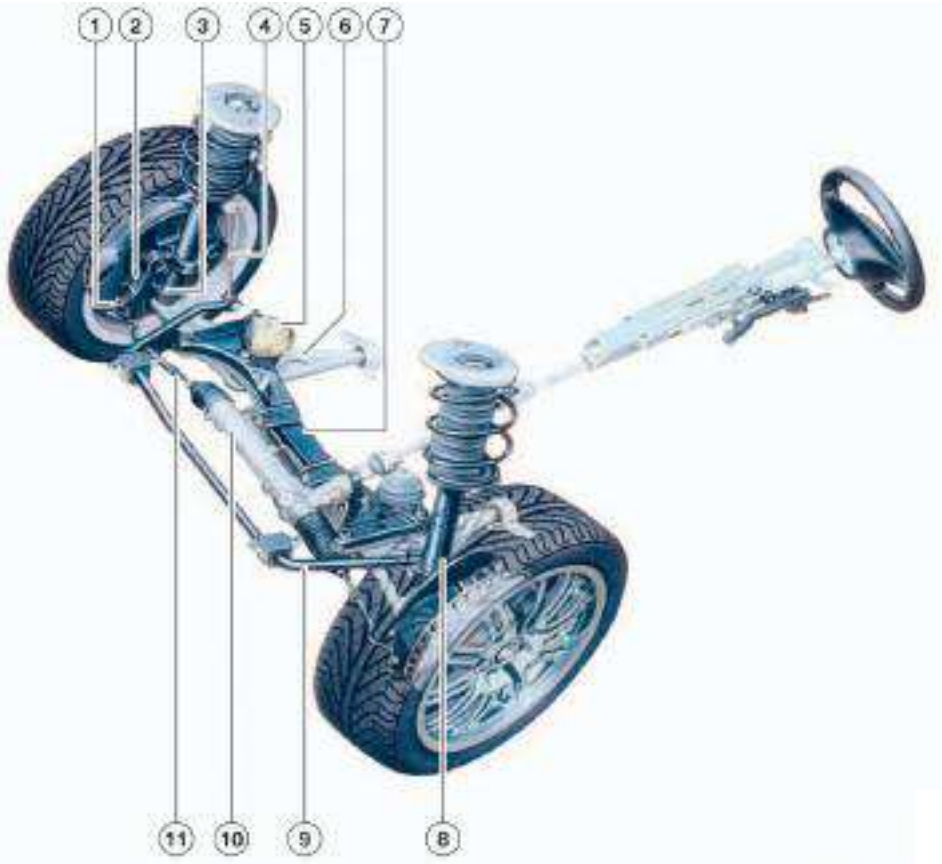

Index	Explanation
1	Track rod end
2	Steering arm
3	Hub-carrier joint
4	Anti-roll bar link
5	Rubber mounting
6	Control arm
7	Front suspension subframe
8	Sprint strut
9	Anti-roll bar
10	Rack and pinion steering gear
11	Track rod

cardiagn.com

Adjustments

There are some limited adjustments on the “Single-Joint” front suspension. Front **toe** is adjustable on all models via the threaded outer tie rod. This can be achieved using standard hand tools.

There are no provisions for **caster** adjustment. However, Caster should always be checked during the wheel alignment to ensure that there is no damaged components.

Camber is only adjustable on the E46 and E85. There is a slot in the upper strut tower which will allow small camber changes of up to 0.5 degrees. If the camber adjustment cannot be achieved, check for proper ride height and inspect for any suspension damage.

Pin

Special Tool # 32 3 140

The illustrations above show the camber adjustment slots and special tool. The proper instructions for the camber adjustment can be found in ISTA and WebTIS Repair Instructions under Group 32.

To adjust the camber, loosen 2 of the nuts on the upper strut mount and remove the remaining nut. Drive out the pin in the strut plate. Install special tool # 323 140. Turn the adjusting nut as needed on the special tool to make camber the adjustment.

It may be necessary to unload the suspension to make the needed camber adjustment. The weight of the vehicle on the strut plate may prevent movement while making the adjustment. Damage to special tool can result.

cardiagn.com

Double Pivot Spring Strut Front Axle

The double-pivot front axle configuration has been in use since the earliest 6 and 7 series vehicles were in production (E23/E24). This design is ideally suited for larger cars due to its rugged construction.

The double-pivot front axle is used on the following vehicles:

- 1 Series - Both the E82 and E88 currently use this type of front axle.
- 3 Series - From E90 through the E93 and most recently the F30.
- 5 Series - From the E28 through the current E60/E61.
- 6 Series - Both the E24 and the new E63/E64.
- 7 Series - All models from the E23 to the current E65/E66.
- 8 Series - E31
- Z Series - The E89 Z4 uses it since start of production.
- X Series - The E83, E53, E84 and F25 use this axle with slight modifications for xDrive and EPS (E84 sDrive Trailing links and xDrive Leading links).

One of the primary features that separates this design from the single-joint front axle is the lower pivot point. This suspension design consists of one upper pivot (strut bearing) and two lower pivot points. The lower pivot is actually two separate points. These two points together create an imaginary (virtual) pivot point or “axis”.

The design eliminates a single pivot (ball joint), which limits the size of the brake rotor and the amount of steering offset (scrub radius). The steering offset still remains positive, but less than that of the single pivot design.

Double Pivot Spring Strut Front Axle

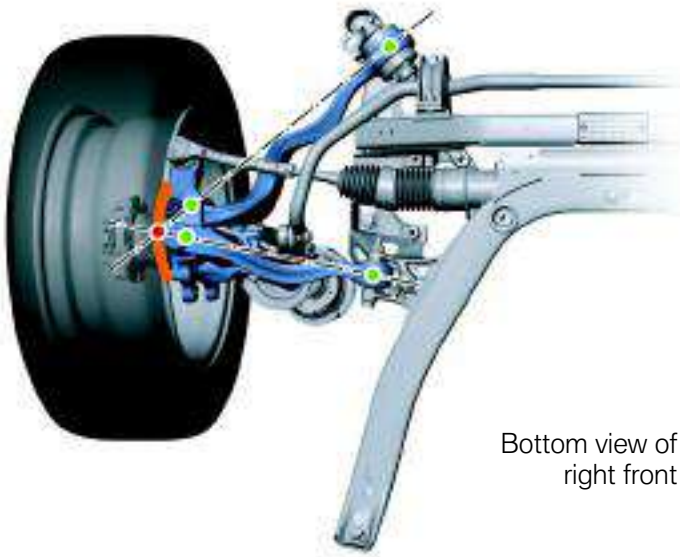

Bottom view of right front

cardiagn.com

Additional advantages of the double pivot system are:

- Ability to reduce body roll while cornering.
- Reduces front end dive tendencies during severe braking situations.
- Utilization of a small positive steering offset, which offers improved handling. This is more evident when the friction levels differ while braking.
- Improved caster position, improving straight line stability at higher speeds, plus better steering return after small steering inputs.

Double-pivot Spring Strut Front Axle

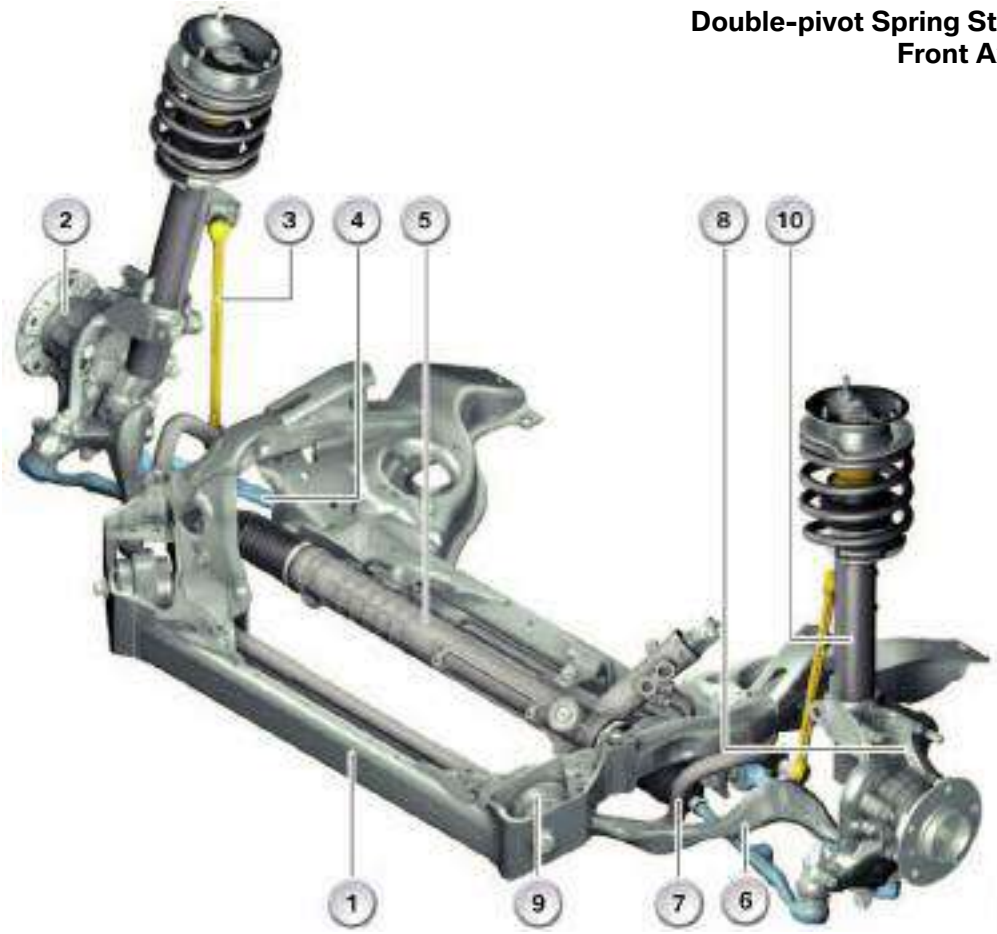

Index	Explanation	Index	Explanation
1	Front subframe cross tube	6	Tension strut
2	Wheel hub	7	Anti-roll bar
3	Anti-roll bar link	8	Swivel bearing
4	Control arm	9	Hydro-mount
5	Rack and pinion steering gear	10	Spring strut

cardiagn.com

Double Pivot Operation

The true benefits of the double-pivot suspension become more evident during turns. On a traditional single-pivot design, the camber and caster remain static during steering maneuvers. On a vehicle with positive caster, the wheels tend to “flop over” during turns. This situation reduces the tire contact area with the road and increases the effort required for steering wheel return. The steering offset (scrub) also remains fixed which has a negative impact on steering wheel return as well.

The double-pivot design allows the “imaginary” lower pivot point to change relative location during turns. The tire which is on the outside of the turn is carrying the majority of the load. Therefore it is the outside tire which must have the most contact area with the road surface.

On a turn, the double-pivot design causes the caster and camber on the outside wheel to become closer to zero. This optimizes the “contact patch” between the tire and the road greatly enhancing handling characteristics.

The body roll is also reduced by the caster change towards zero. One of the other benefits of this arrangement is the variable steering offset. The variable steering offset during turns provides for better “returnability” of the steering wheel.

Double-pivot Spring Strut Front Suspension

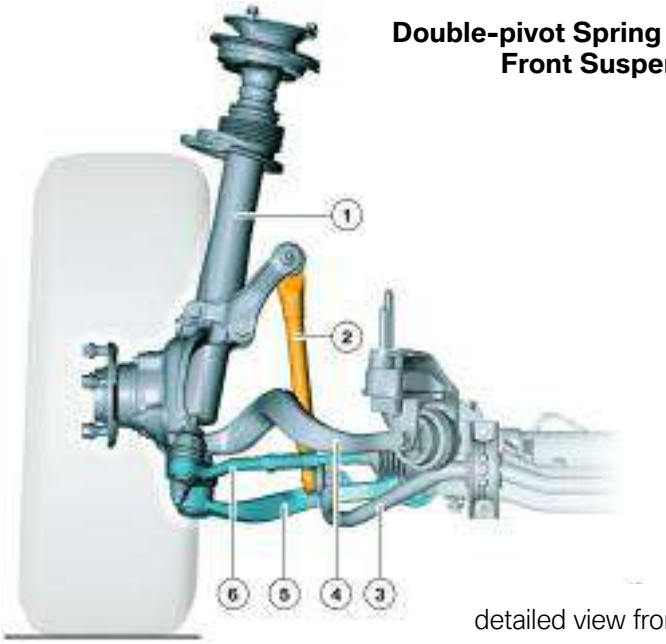

detailed view from the front

Index	Explanation	Index	Explanation
1	Spring strut	4	Tension strut
2	Anti-roll bar link	5	Control arm
3	Anti-roll bar	6	Track / Tie rod

cardiagn.com

Double Pivot Front Axle Configurations

The double pivot axle features an axle carrier, to which the suspension components are attached. The carrier also provides the mounting points for the steering rack, stabilizer bar and engine mounts. The carrier is either steel (on the earlier models), or aluminum.

The aluminum carrier was first used on the E39 six-cylinder (528i) from 1997. The E39 was the first and only models to have both steel and aluminum carriers. The E39 540i featured a steel carrier with a steering box (instead of a rack and pinion). Aluminum components were used wherever possible on the 540i, except on the suspension carrier. On the other hand, the E39 528i was equipped with an aluminum carrier and a steering rack.

Since then, all vehicles equipped with the double-pivot suspension utilized the aluminum carrier and steering rack configuration.

Front Axle - E39 540i

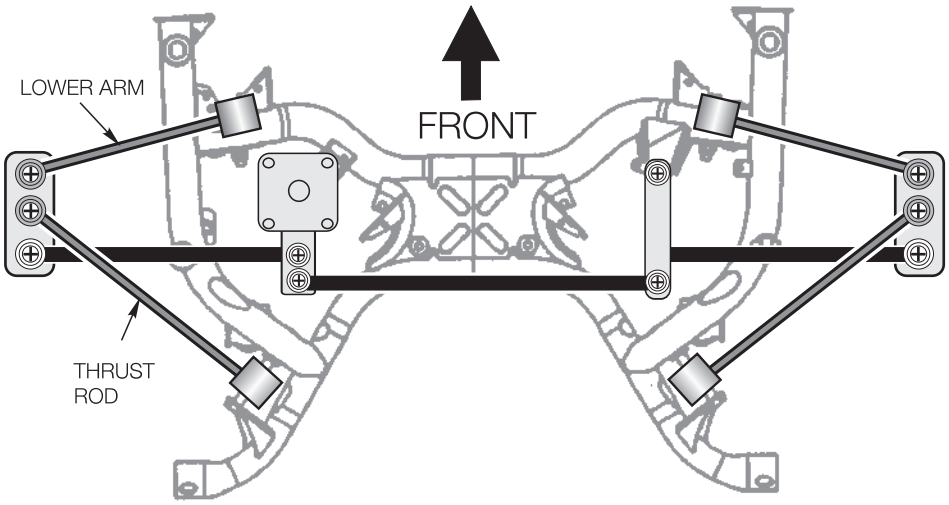

Front Axle - E39 528i

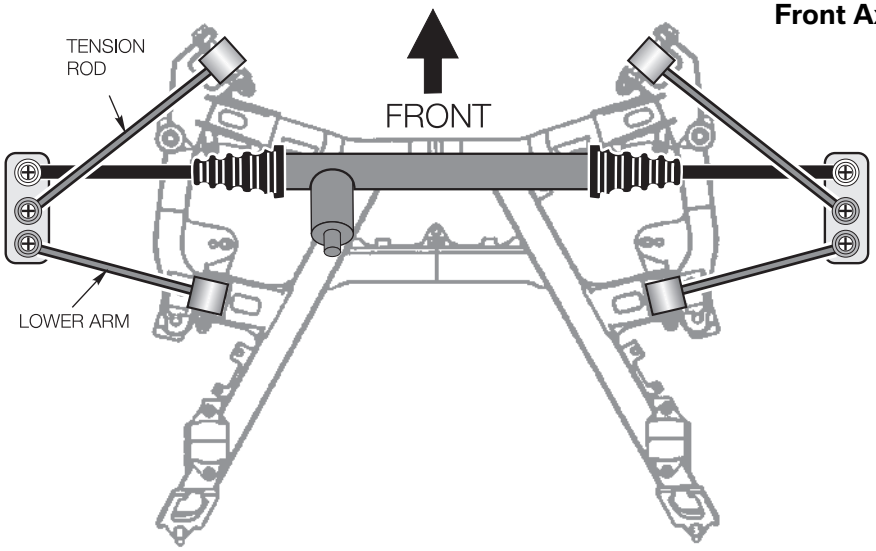

cardiagn.com

E38 Front Suspension

The E38 uses an updated version of the double-pivot suspension as compared to the previous 7 series designs (E23/E32). The features of the E38 suspension are as follows:

- Suspension carrier is made from tubular steel as opposed to stamped steel.
- Suspension carrier is lighter and can be removed as a complete unit.
- Design changes allow for larger front brake rotors.
- Slight difference in the configuration of the lower control arms.
- Lower forward control arms are made from forged aluminum.
- Variable diameter coil springs provide lower profile.

E38 Front Suspension

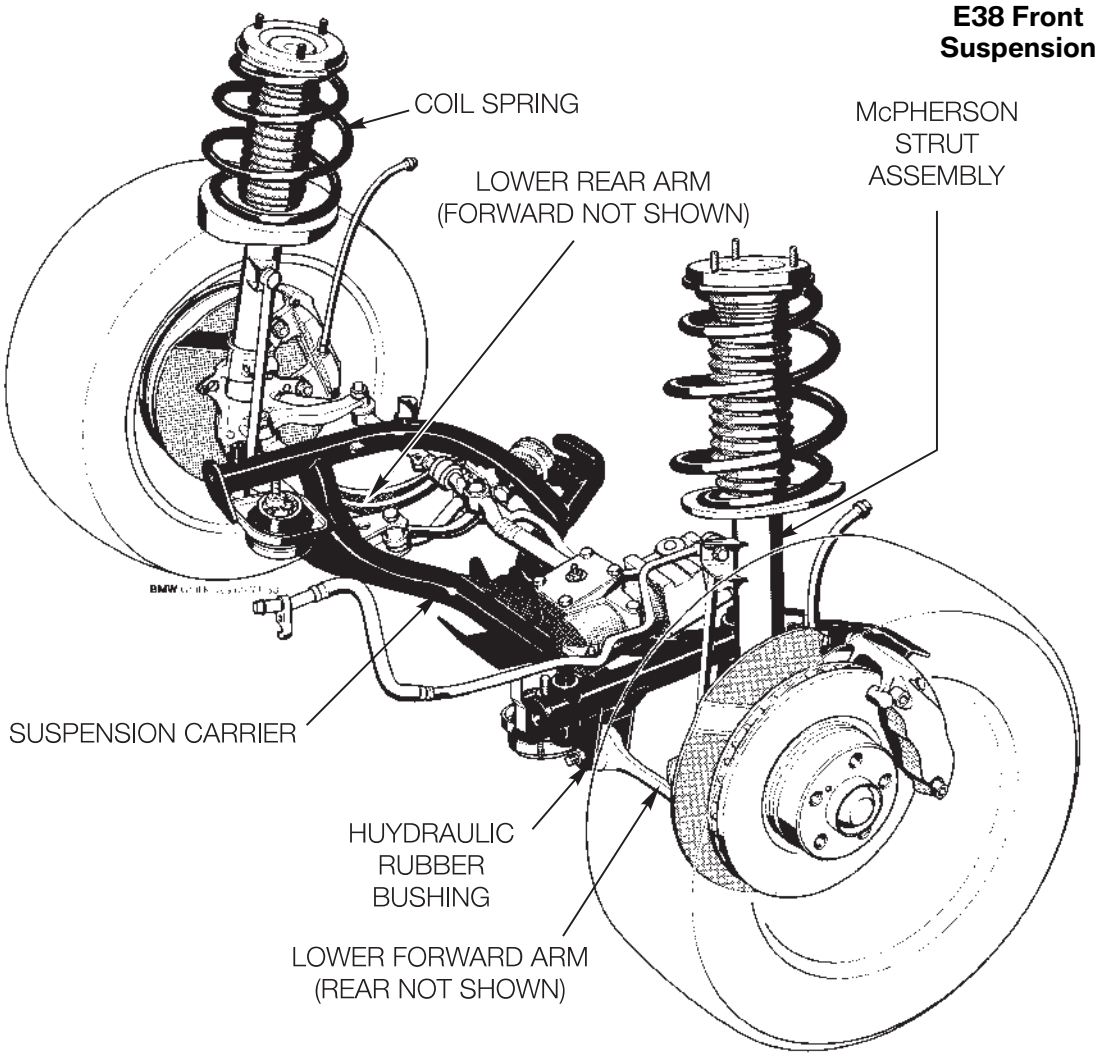

cardiagn.com

E6x Front Suspension

The double-pivot front suspension has been further enhanced since initially introduced. The materials used in the front axle carrier offer high tensile strength to support extreme loads. The front axle carrier is also manufactured entirely from aluminum. It consists of cast alloy preformed sections which are welded into the extruded sections. The front axle carrier accommodates the steering gear, control arms and tension struts, engine mounts, stabilizer bar, heat shield and the underbody panels.

A “thrust zone” panel is bolted on to increase the transverse rigidity of the front of the vehicle. This reinforcement has a positive effect on the handling, sound level and crash performance. The benefits as a result of the improved front axle include increased agility, improved comfort by the reduction of unsprung weight, a reduction in fuel consumption by lowering the gross vehicle weight and better axle load distribution.

The front double pivot suspension used since the introduction of the E65/66 includes the following:

- Aluminum front axle carrier
- “Thrust zone” panel for increased rigidity
- Aluminum suspension components
- Aluminum strut tubes

The front suspension on the E6x vehicles also includes accommodations for the Active Roll Stabilization (ARS) system.

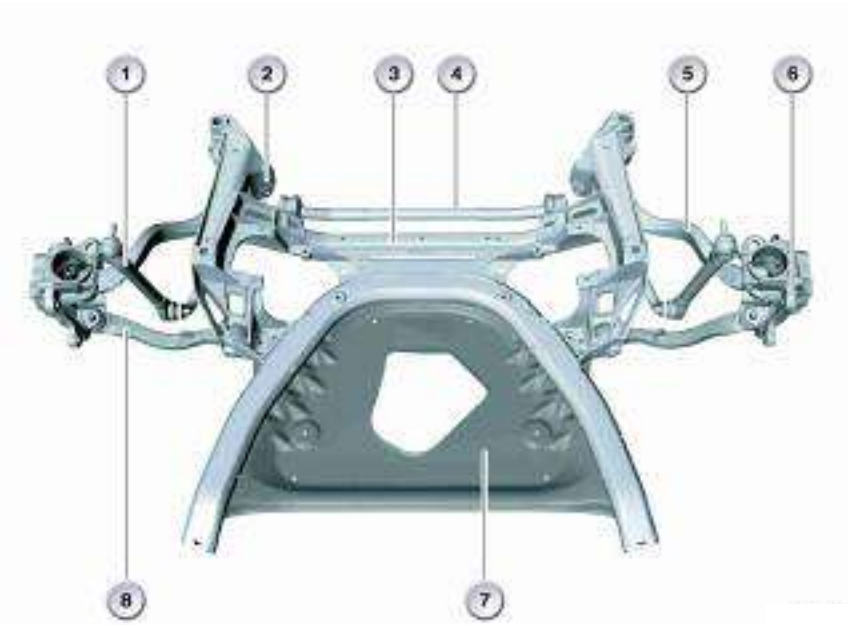

Index	Explanation
1	Stabilizer link
2	Hydro-mount
3	Front axle carrier
4	Stabilizer bar
5	Tension strut
6	Swivel bearing
7	Reinforcement plate
8	Control arm

cardiagn.com

Current Front Axles

Double-pivot Front Axle

E8x / E9x Front Suspension

The E9x and E8x vehicles also use the **double-pivot front suspension**. Traditionally, the 3-series was equipped with the **single pivot design**. The E90 marked the first time that the double-pivot design was used in the 3-series platform.

The E82 has many features in common with the E9x vehicles especially the chassis and dynamic driving systems. Therefore the double pivot spring strut front axle design was also installed on the E8x 1 Series vehicles. With the exception of the 135i sport tuned version the BMW 1 Series front and rear suspensions were all inspired by the E90 design.

E90 Double-pivot Front suspension

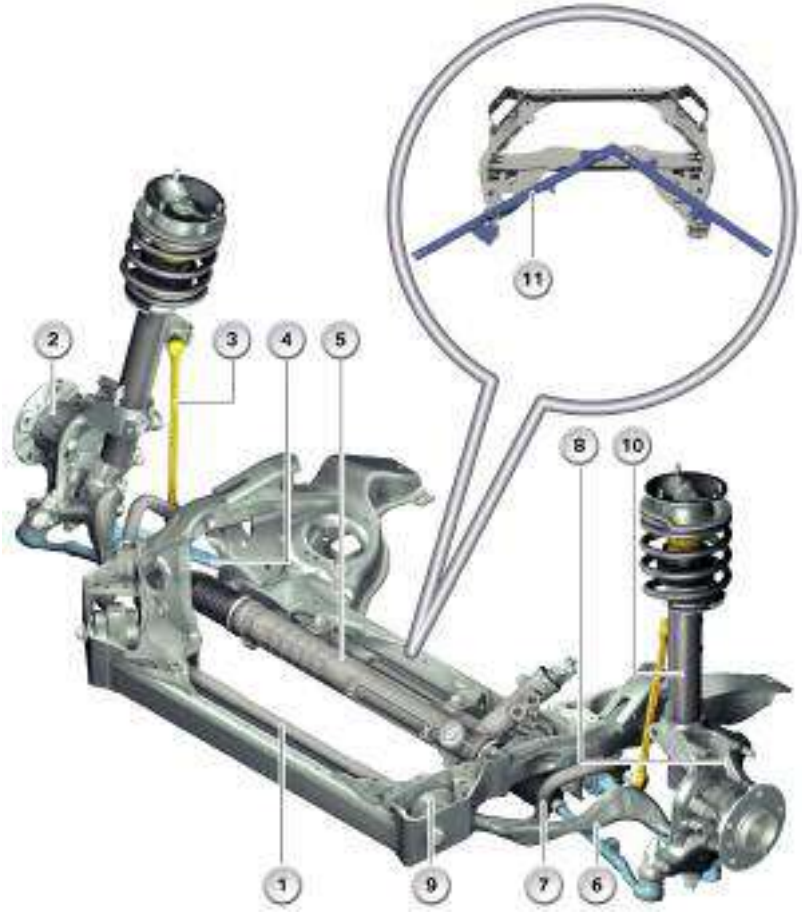

Index	Explanation
1	Front Axle Carrier
2	Wheel Hub
3	Stabilizer Link
4	Control Arm
5	Rack-and-Pinion Steering
6	Tension Strut
7	Stabilizer Bar
8	Swivel Bearing
9	Hydro-Mount
10	Spring Strut
11	Reinforcing Strut

cardiagn.com

The double-pivot system establishes a geometrical “axis” formed by the suspension links, creating one upper and two lower pivot points. Two lower pivot points (double pivot) formed by the control arm and tension strut create an “imaginary” pivot point, that is extended further out on the wheel carrier. This design allows pivot points on the wheel carrier to be selected in order to effectively accommodate larger brakes.

Additional advantages of double pivot system are:

- Ability to reduce body roll while cornering.
- Reduces front nose dive tendencies during severe braking situations.
- Utilization of a small positive steering offset which offers improved handling while braking in split **“μ”** conditions.
- Enhanced caster position, improves straight line stability at higher speeds, plus better steering return after small steering inputs.

Double-pivot suspension

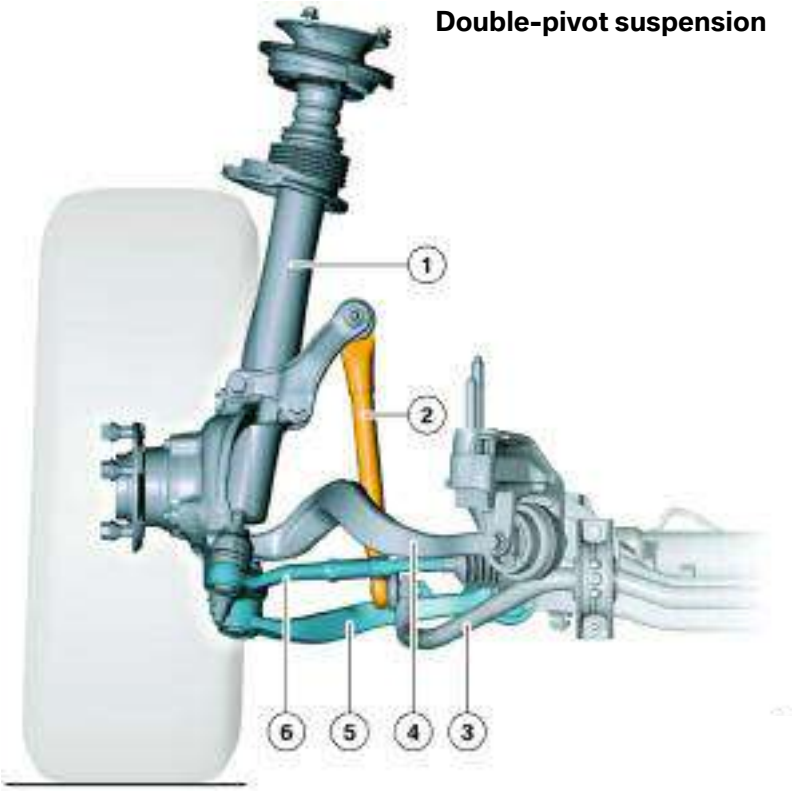

Index	Explanation	Index	Explanation
1	Spring strut	4	Tension strut
2	Anti-roll bar link	5	Control arm
3	Anti-roll bar	6	Track / Tie rod

cardiagn.com

E89 Front Suspension

The E85 was equipped with a single-joint spring strut front axle so to optimize the suspension properties, the E89 is equipped with a double-pivot (double joint spring strut) front axle.

An even further modified version of the Double-pivot front axle known from the E8x and E9x series vehicles is used in the E89. Adaptations were necessary due to the available space and the modified suspension geometry.
The well-proven principle of the central link rear axle from the E85 is retained for the rear axle.

E89 Double-pivot Front Axle

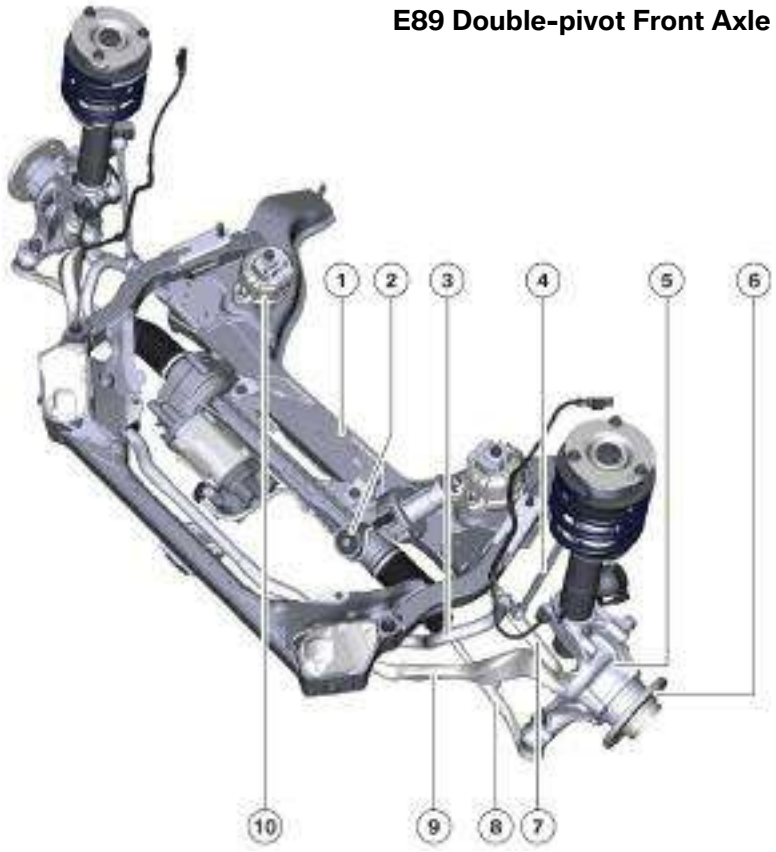

Index	Explanation	Index	Explanation
1	Front Axle Carrier	6	Wheel hub
2	Electromechanical power steering	7	Control arm
3	Stabilizer bar	8	Track rod
4	Stabilizer link	9	Tension strut
5	Swivel bearing	10	Engine mount

cardiagn.com

Steering Offset on the E89

The steering offset (scrub radius) of the E89 is greater compared to that of the E85. The reason for this is that the front axle has been adopted from production line 2 (1 Series and 3 Series).

On the single-joint spring strut front axle of the E85 the position of the wheel control joint largely determines the size of the steering offset. Since the steering offset should be as small as possible, the wheel control joint must be located as far towards the outside as possible. This however results in problems concerning the package space for the brake disc and brake calliper. On the double-pivot (double-joint spring strut) front axle the position of the control arm and tension strut with respect to each other determines the size of the steering offset.

Determining the Lower Pivot Point

The pivot points of the control arm or wishbone and tension strut at the swivel bearing can therefore be selected such that no space problems are encountered for the brake system.

While these aspects still retain their validity, a larger steering offset than on the single-joint spring strut front axle is now used. The reason for this is that common parts from production line 2 are used as far as possible but the track width has increased compared to the 1 Series and 3 Series. Among other measures, this was achieved by changing the rim offset, thus, of course, also increasing the steering offset.

The effects of increased susceptibility to interference caused by a larger steering offset were eliminated by an optimized and modified elastokinematics system and tuned to such an extent that an improvement was achieved compared to the E85. As a result, the response of the E89 to steering movements is slightly more indirect at high speeds and very direct at speeds up to 100 km/h (62 mph). The vehicle handling is well balanced up to the limit range and therefore has outstanding control properties.

Positive Steering Offset

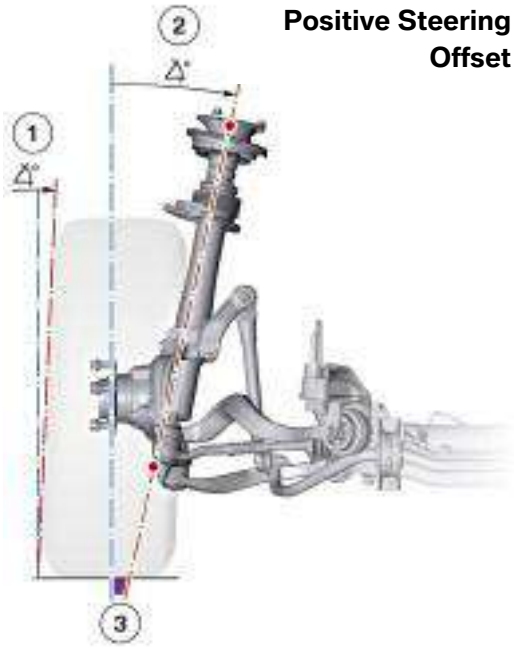

Index	Explanation
1	Camber
2	Steering Axis Inclination
3	Steering offset

The term “Steering Offset” is also known as “Scrub Radius”,“Steering Roll Radius” or “Kingpin Offset”.

cardiagn.com

Both tension struts are mounted with hydraulic bushings on the front axle carrier. In addition, the distance of the tension strut and control arm pivot points at the swivel bearing largely determines the vertical force lever arm. The further the joints of the tension strut and control arm are from each other at the swivel bearing, the greater the recovery force initiated by the vehicle weight.

On the single-joint spring strut front axle, the distance is zero as the two joints of this axle have merged to form one. The resulting advantage of the double-joint spring strut front axle is improved directional stability in the high speed range and a lower tendency to steering instability in the lower speed range (less susceptible to torsional vibration in the steering wheel).

Compared to that of the control arm, the ball joint (guide joint) of the tension strut is raised at the swivel bearing, thus providing effective anti-dive control. A further advantage of this arrangement is that this tension strut mount on the axle carrier can be arranged at approximately the same level with respect to the mounting at the swivel bearing and does not have to be lowered. This is of particular benefit to a large overhang angle. In addition, it is possible to lower the control arm mount on the axle carrier side, thus enabling a lower roll center.

The single-joint axle features only one type of cross brace as the axle carrier. The double-pivot (double joint spring strut) front axle on the other hand features a frame which additionally provides significant stiffening of the front end.

Description	E85	E89
Total toe-in	14.4’	14.0’
Track width	1473.3 mm	1511.1 mm
Camber	-34.8’	-23.3’
Steering Axis Inclination	15.7	14.3
Caster angle	5.9	7.2
Caster offset	17.7 mm	20.7 mm
Steering offset	4.7 mm	9.6 mm
Steering angle, inner	43.1	37.7
Steering angle, outer	35.3	31.2
Rim offset ET/IS	47 mm	29 mm
Tire size	225/50 R16 225/45 R17 225/40 R18	225/45 R17 225/40 R18 225/35 R19

cardiagn.com

F30 Front Suspension

The double-pivot front axle with trailing links in the F30 represents the optimum combination of driving dynamics and ride comfort. The load-bearing function of the steering box housing achieves an extremely high degree of rigidity with the lowest possible weight.

Compared to its predecessor in the E90, the front axle support in the F30 must satisfy more stringent requirements. A second crash load path has now been integrated above the front axle support. In order to guarantee optimum crash behavior, a high-strength welded steel structure has been used instead of an aluminim front axle support.

The Electronic Power Steering EPS (electromechanical power steering) featured in the F30 makes an important contribution to BMW EfficientDynamics. The F30 is available with 2 types of EPS (Basic and Variable sport option)

F30 Double Pivot Front Suspension with Trailing Links and EPS

cardiagn.com

Improved acoustic properties and maximum rigidity and accompanying increase in ride comfort can be achieved within a small installation space.

The ball joints of the front axle have a reduced friction design which results in improved response characteristics. Also the use of cast aluminim parts (wishbones, trailing links) and aluminim die-cast parts (swivel bearings) reduces the unsprung masses.

For vehicles with an adaptive M sports suspension (optional equipment 2VF) the electronic damper control EDC is also integrated.

Front Axle of F30
viewed from below

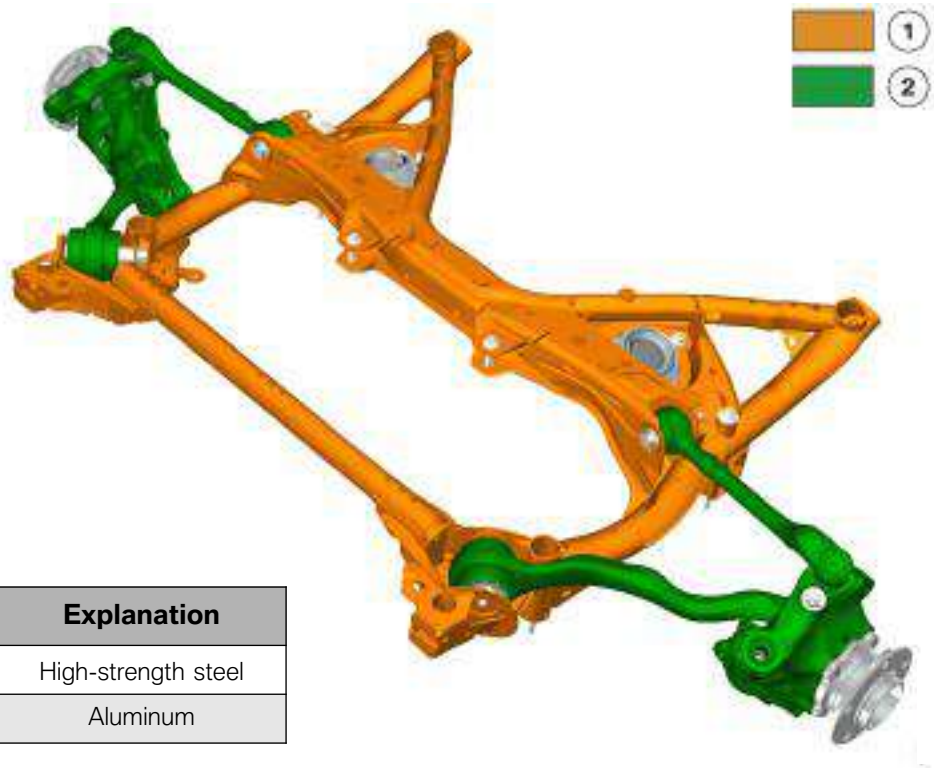

Index	Explanation
1	High-strength steel
2	Aluminum

Camber correction is possible by replacing the swivel bearing with and off-set part available from the parts department. Refer to the adjustment section in this chapter for more information.

cardiagn.com

Sport Activity Vehicles (Except E70) Front Suspension

The E53, E83, E84 and F25 vehicles use a modified version of the double-pivot (double joint spring strut) front suspension. There are modifications to accommodate the front drive axle components. Although most xDrive vehicles use hydraulic rack and pinion steering the E84 and F25 use EPS. There is an aluminum thrust panel which helps protect the oil pan and also provides additional stiffening properties for the front suspension carrier.

E83 Front Suspension

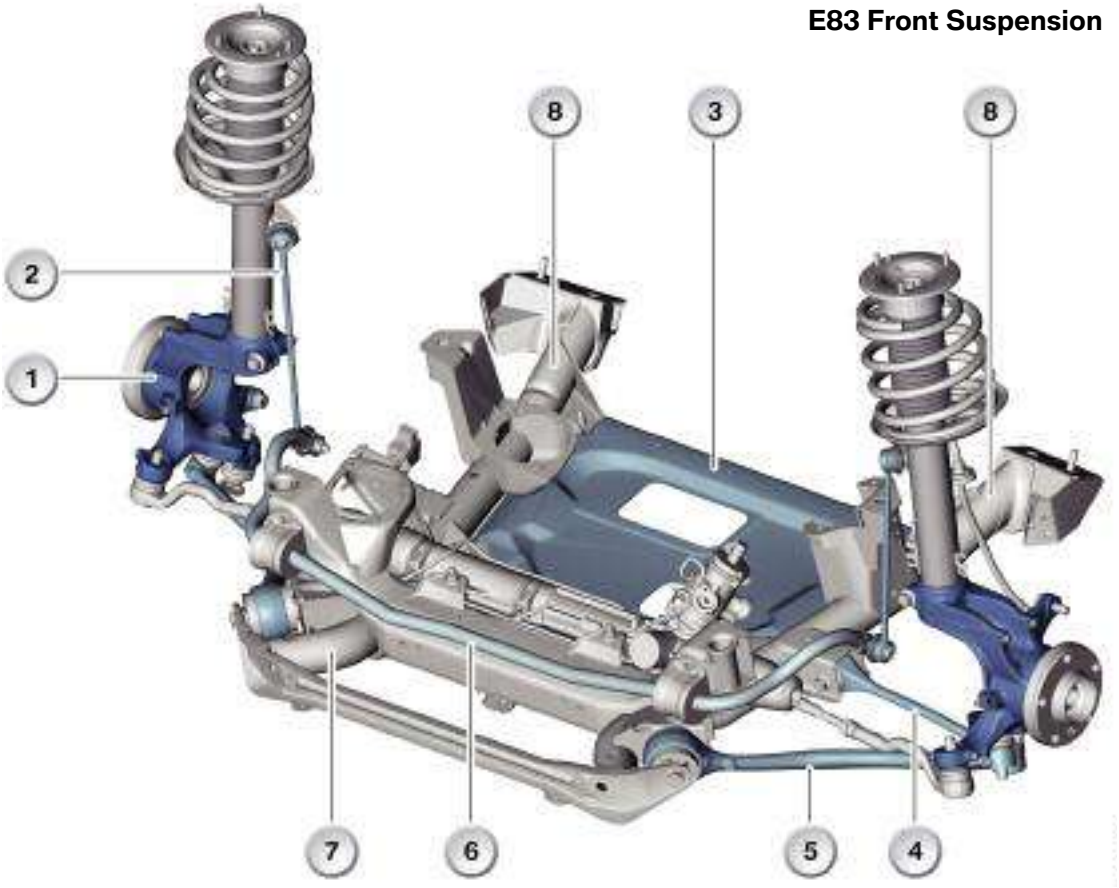

Index	Explanation	Index	Explanation
1	Swivel bearing	5	Tension arm
2	Anti-roll bar link (attached to strut tube)	6	Anti-roll bar
3	Thrust panel	7	Front axle carrier
4	Control arm	8	Axle carrier rear mounts

cardiagn.com

F25 Front Axle with EPS

The Double-pivot front suspension with trailing links in the F25 offers the ideal combination of driving dynamics and ride comfort. The supporting function of the rack and pinion steering housing achieves extremely high rigidity with minimum weight. Low-friction ball joints are used in the front axle. This has greatly improved the response characteristics over its predecessor.

The standard Electronic Power Steering (EPS) is a distinctive feature of the F25 and makes a significant contribution to "EfficientDynamics". (2VL Variable sport steering is available as an option).

The Electronic Damper Control (EDC) is also available as optional equipment (SA 223 Dynamic Damper Control).

F25 Double-pivot Front Axle with Trailing Links

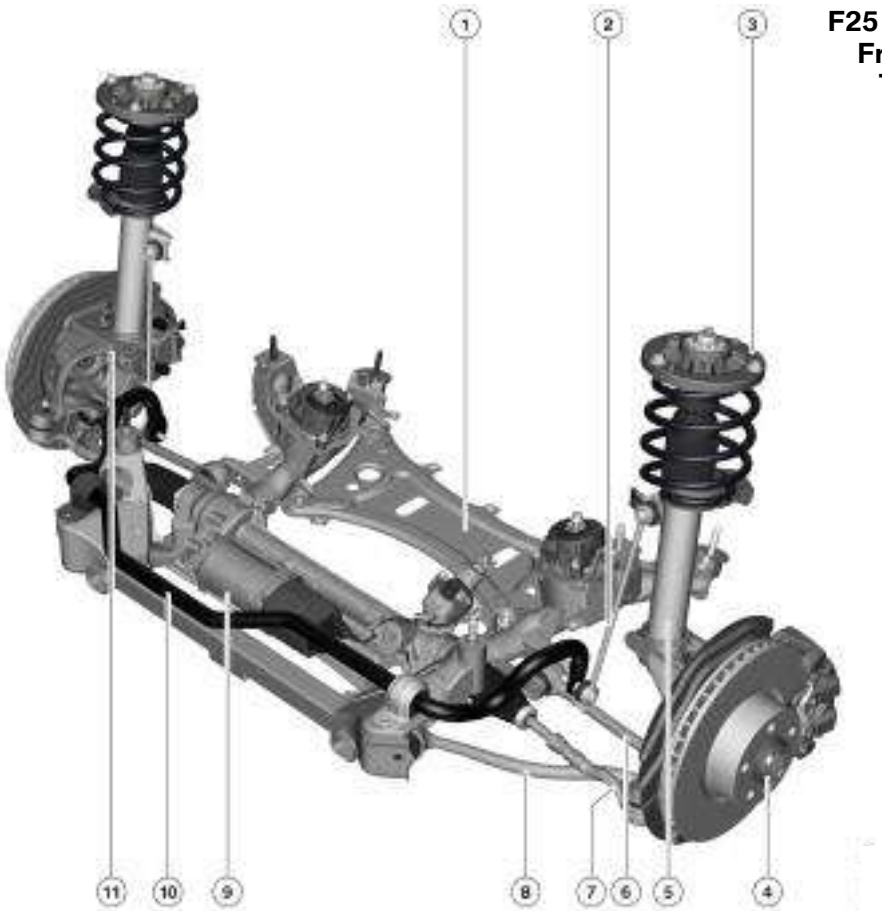

Index	Explanation	Index	Explanation
1	Front Axle Carrier	7	Track Rod
2	Stabilizer Link	8	Trailing Link
3	Support Bearing	9	EPS Rack-and-Pinion
4	Wheel Hub	10	Stabilizer Bar
5	Spring Strut	11	Swivel Bearing
6	Wishbone (Control Arm)		

cardiagn.com

E84 Front Suspension

The E84 sDrive (rear wheel drive) uses an aluminim Double-pivot front axle fitted with **trailing** links while the E84 xDrive (four-wheel drive) uses a steel a Double-pivot front axle fitted with **leading** links.

E84 Double-pivot Front Axle with Trailing Links

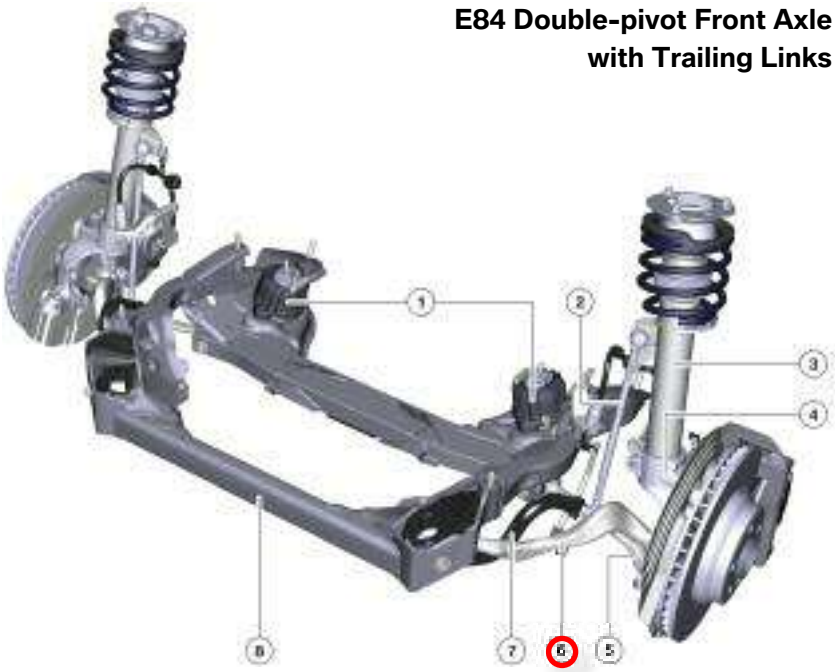

Index	Explanation
1	Engine mount
2	Stabilizer link
3	Spring Strut
4	Swivel Bearing
5	Wishbone control arm
6	**Trailing** Links
7	Stabilizer Bar
8	Front axle support

E84 Double-pivot Front Axle with Leading Links

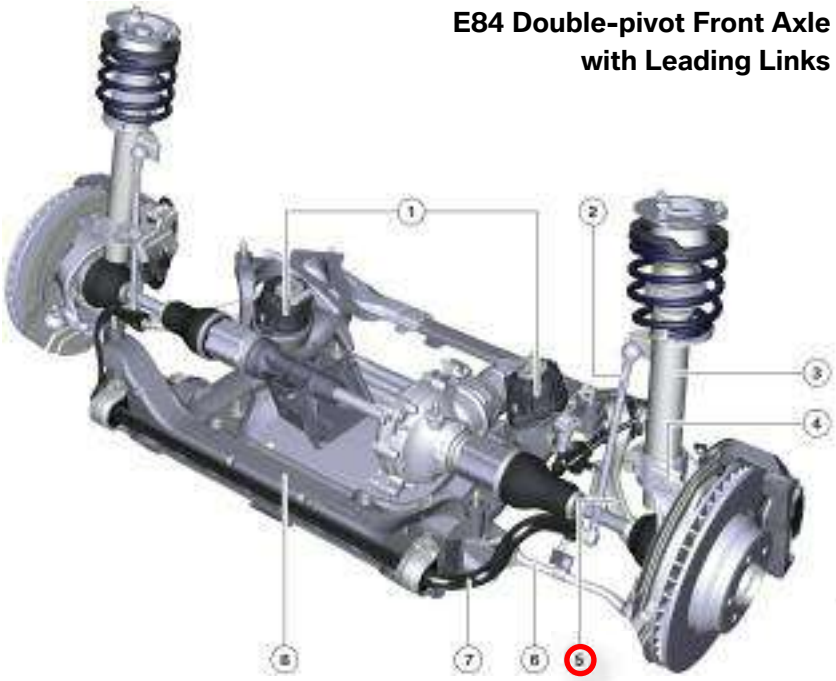

Index	Explanation
1	Engine mount
2	Stabilizer link
3	Spring Strut
4	Swivel Bearing
5	**Leading** Links
6	Wishbone control arm
7	Stabilizer Bar
8	Front axle support

cardiagn.com

Adjustments - Double-Pivot Front Axle

As with all BMW front suspensions, **Caster** angle is not adjustable. However, during an alignment, Caster should always be checked to rule out any damage to the chassis or suspension components.

As with other models, **Toe** is adjustable via the threaded tie rod assembly.

Camber is adjustable by a slotted strut mounting holes. This adjustment is only available as from the E53. Vehicles which are capable of this adjustment include, E53, E6x, E9x, E8x.

On the E84, F25 and F30 the camber can be corrected by using special offset swivel bearings which are available from the parts department.

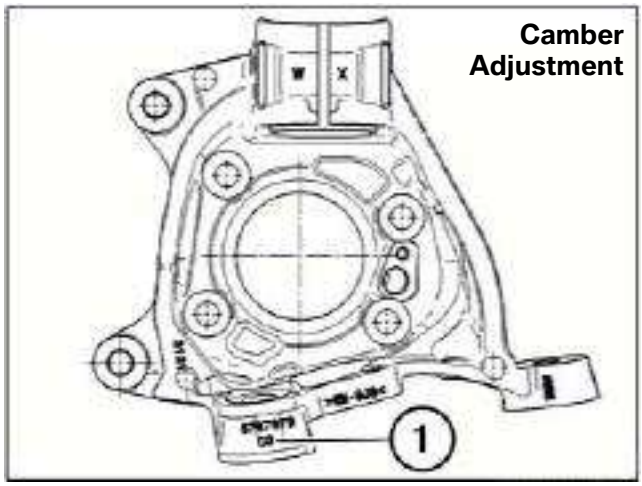

Two versions of the swivel bearings are available:

- Version 1: camber correction -0° 30'
- Version 2: camber correction 0° 30'.

Version Identification	Color coding
Standard	No color coding
Plus 30' +	Green dot (1)
Minus 30' -	Blue dot (1)v

These camber correction swivel bearings are used to correct the camber values by 30 minutes. They are only to be used only if the tolerance values are exceeded.

The E83, E53, E84, F25 and F30 vehicles use a modified version of the Double-pivot front suspension which may also be referred to as Double-joint spring strut front axle.

cardiagn.com

Double Wishbone Front Axle

E7x Front Suspension

The first time a double wishbone front suspension was used on a BMW vehicle was on the E70. The outstanding driving dynamics, the excellent driving comfort as well as the stable straight-ahead running properties are factors of this design solution that contribute to a high degree of driving pleasure and safety while making the vehicle ideal for every day use.

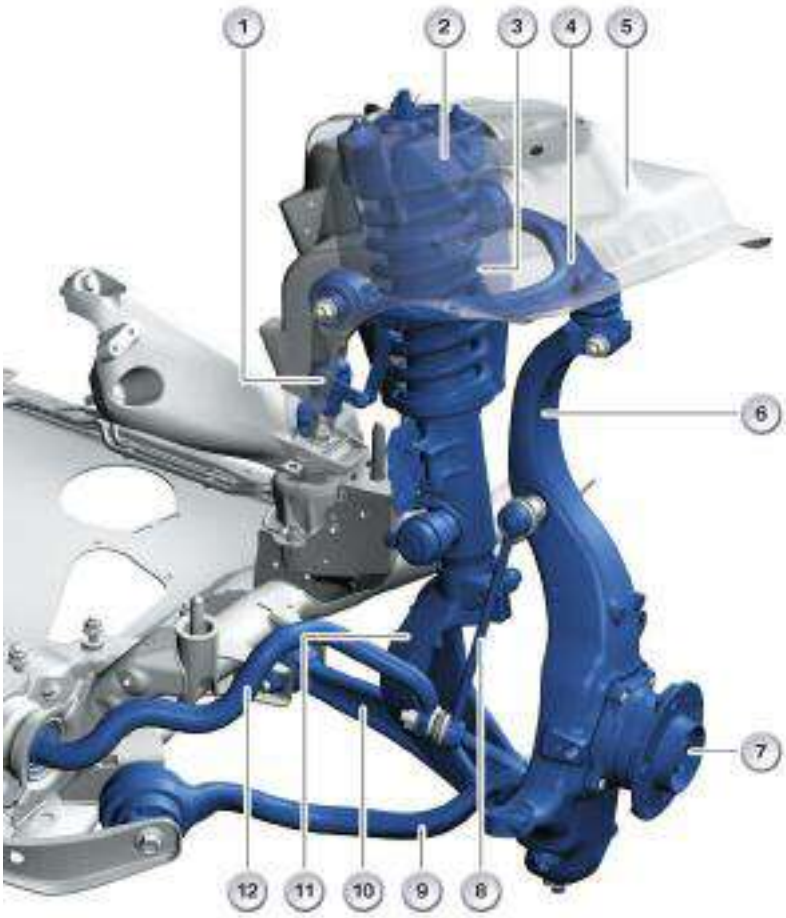

E70 Double Wishbone Front Suspension

Index	Explanation	Index	Explanation
1	Ride-height sensor	7	Wheel bearing
2	Mount	8	Stabilizer link
3	Spring strut	9	Tension strut with hydraulic mount
4	Upper control arm (upper wishbone)	10	Lower control arm (lower wishbone)
5	Spring strut support	11	Spring strut fork
6	Swivel bearing	12	Stabilizer Bar

cardiagn.com

The upper control arm (wishbone) positively influences front wheel travel by reducing Camber changes during jounce and rebound events.

The arrangement of the suspension allows the strut assembly to be focused on dampening duties alone. The strut is no longer part of the steering, but fixed in place (no upper bearing). The steering axis now rotates by way of the swivel bearing (6). The arrangement of the front suspension includes bushings at various swivel points. This allows for reduced friction, which in turn allows the damper to respond to road surface irregularities in a more sensitive manner.

This design works well in conjunction with the Vertical Dynamics Management (VDM) system.

Components with special materials (see previous graphic):

- The forged aluminum swivel bearing (6) with the 3rd generation wheel bearing (7) Semi-trailing arm connected via steel bushes/tapered screw connection to the swivel bearing.
- The upper control arm (4) is made from forged aluminum and the cylindrical ball joint pin is clamped in the swivel bearing (6).
- Tension strut with hydraulic mount (9) and lower control arm (10) are forged steel components while the bottom control arm bears the spring strut (3) by means of the cast steel spring strut fork (11).
- The front axle subframe is a welded steel structure with an aluminum thrust panel for maximum lateral stiffness with service openings.

The steering pivot axis of the wheel suspension is now formed by a joint at the upper control arm and the virtual pivot point of the lower arm level as known from the spring strut axle.

See “F0x Virtual Pivot Point” for more information.

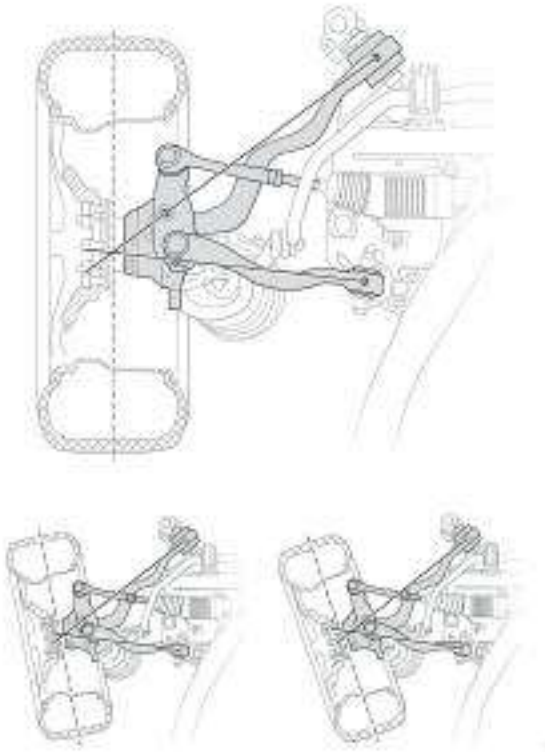

Virtual Pivot Point of Lower Control Arm Level

cardiagn.com

F0x / F1x Front Suspension

A double wishbone front axle as known from the E70 and E71 is also fitted on the F0x/F1x vehicles.

F0x Double Wishbone Front Suspension

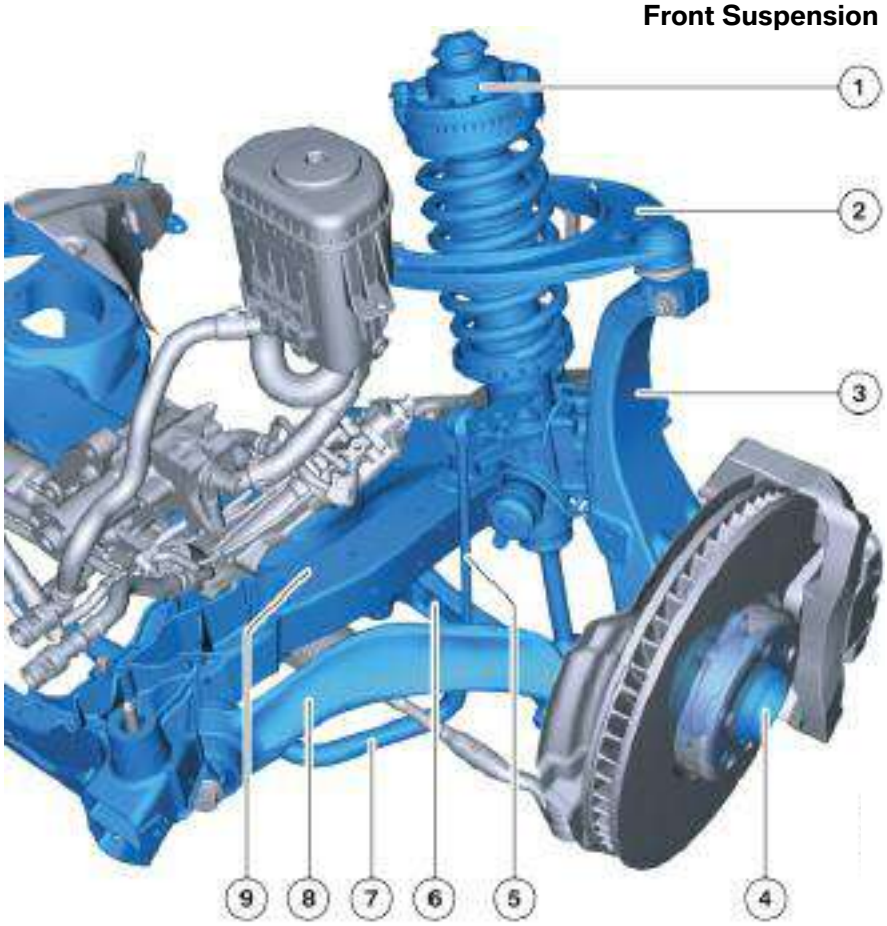

Index	Explanation	Index	Explanation
1	Spring strut	6	Transverse control arm, bottom
2	Transverse control arm, top	7	Stabilizer bar
3	Swivel bearing	8	Tension strut with hydraulic mount
4	Wheel bearing	9	Front suspension, subframe
5	Stabilizer link		

cardiagn.com

In comparison with the double pivot spring strut front axle on the E65, the F0x/F1x front axle design offers the following advantages:

- Higher transverse acceleration is reflected in greater vehicle agility.
- Improved cornering/steering and transition characteristics which are particularly favorable in terms of rolling motion.
- Reduced interference means greater comfort.
- Shock absorbers that are subjected to virtually no transverse forces provide greater comfort.
- The design layout of the double wishbone front axle facilitates vertical dynamics control (VDC) and xDrive (as on the E70/E71) without the need to adjust height and no spring travel loss.
- Double wishbone front axles improve directional stability.

The outstanding driving dynamics, the excellent driving comfort as well as the exceptional directional stability are factors of this double wishbone front axle design solution that contribute to a high degree of driving pleasure and safety while making the vehicle ideal for every day use and providing the most relaxing drive on long journeys.

The introduction of a second control arm level for wheel control, which is arranged above the wheel, results in additional degrees of freedom for the kinematics of the front axle as well as for the suspension/damping compared to other designs such as a spring strut front axle.

NOTES

cardiagn.com

SAI - Virtual Pivot Point on Double Wishbone Front Axle

As is the case with the E70 the steering axis inclination (1) of the wheel suspension is formed by a joint at the top A-arm and the virtual pivot point of the lower arm. This allows the steering pivot axis to be positioned in such a way as to produce a small steering offset at hub (3) with sufficient weight recoil.

Index	Explanation
1	SAI
2	Perpendicular line in wheel contact point
3	Steering Offset

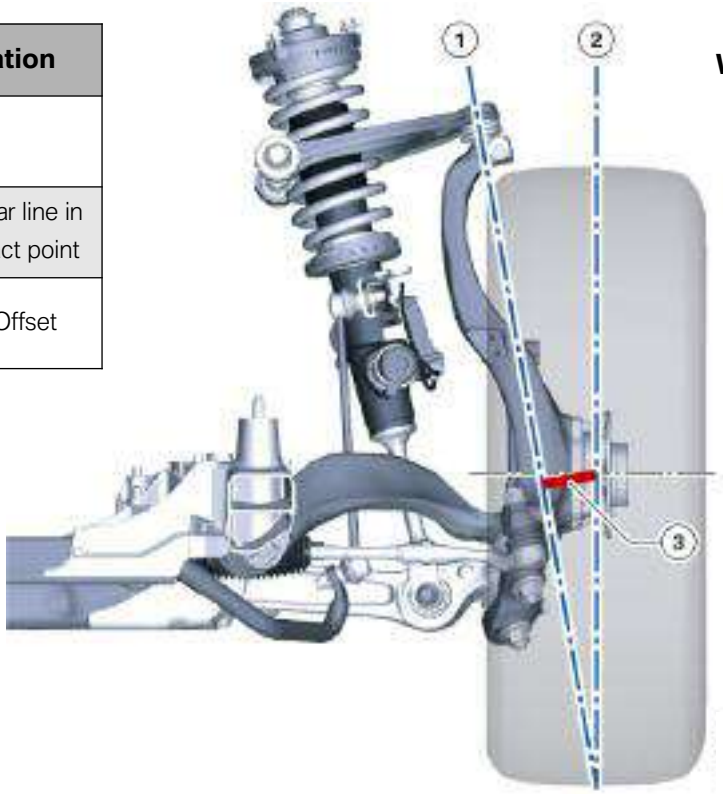

SAI on Double Wishbone Front Axle

Description (Front axle data)	E65 / E66	F01 / F02
Steering offset at hub (mm)	**88.1**	**56.3**
Track width (mm)	1578	1611
Camber	-0° 20' ±20'	-0° 12' ±15'
Camber difference	0° ±30'	0° ±30'
Total toe-in	10' ±8'	16' ± 6'
Turning circle (**m**/ft)	**11.92**/39.10	**12.15**/39.86
Kingpin offset (mm)	0	0.5
Toe angle difference (toe out on turns)	1° 27' ±30'	12° 20'
Caster angle	7° 27' ± 30'	7° 0'

cardiagn.com

This steering offset at hub is a direct influence on the scrub radius which is decisive for transmitting the irregularities on the road surface to the steering wheel.

The lower and upper arm levels now move simultaneously in response to wheel deflection. As a result, as the spring compresses, the wheel pivots in such a way that the camber does not decrease as much as is the case with a spring strut front axle.

Since the two control arm levels undertake the wheel control, the damper is virtually no longer subjected to transverse forces and rotational motion.

This makes it possible to do without a roller bearing assembly on the spring strut support. Instead of this conventional roller bearing, a damping and support unit is installed that takes up all three load paths. The load paths are the damper piston rod, the inner auxiliary spring and the bearing spring. This damping and support unit is still referred to as the "strut mount".

Due to the lack of transverse forces, the piston rod can be made thinner, resulting in a similar displacement volume in the push and pull direction of the damper. This serves to improve the design layout of the damper and is the prerequisite for the innovative damper control system - vertical dynamics control (VDC).

Due to the substantially lower friction at the circumference of the piston rod, the damper can respond more sensitively.

By connecting the stabilizer bar via the stabilizer link to the spring strut, the torsion in response to body roll motion is equivalent to the total wheel lift from the inside to the outside of the curve (in other suspension setups, the stabilizer bars are connected to a transverse control arm and therefore achieve only a fraction of the torsion angle).

Despite being highly effective, this high degree of torsion allows the stabilizer bar to be made relatively thin which has a favorable effect on driving comfort and dynamics as well as saving weight.

cardiagn.com

Adjustments - Double Wishbone Front Axle

The **Toe** adjustment on the double wishbone front axle is carried out by means of a tie rod adjustment.

The **Cambe**r adjustment, however, can only be adjusted by a replacement of the upper control arm (wishbone). The control arm is available in three possible part numbers. One of which is the standard (zero) arm, while the other two are offset to effect a small Camber change if needed.

Negative (-) Camber

Standard Camber

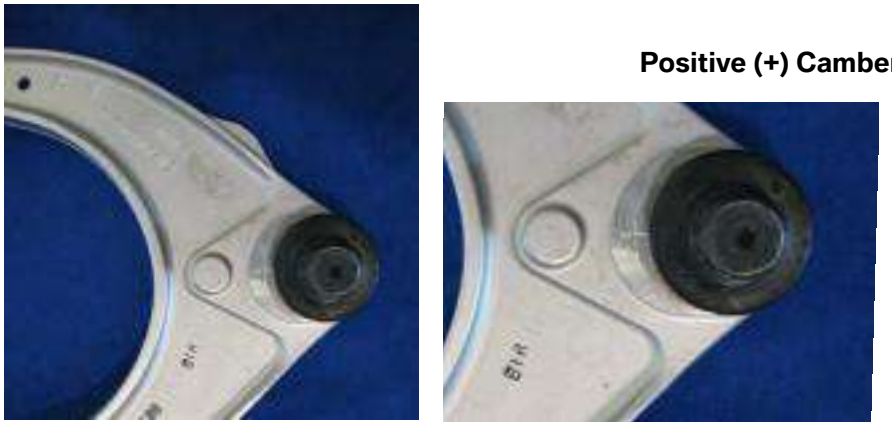

Positive (+) Camber

cardiagn.com

NOTES PAGE

cardiagn.com

Rear Suspension History

As requirements for improved performance continue to increase, rear axle technology must also be continually enhanced. Throughout the development of various BMW Group vehicles, the rear axle has continually evolved to meet the overall needs of chassis design.

Throughout the various design changes, rear axles have allowed improvements in traction and stability. The rear axles have also been “weight optimized” which allows for an overall balanced chassis.

The rear axle designs have also made it possible to decrease changes in rear camber and toe during suspension travel. By limiting camber and toe changes, the tire can maintain a better contact patch, thereby improving rear end stability and improved tire wear.

E65/E66 Rear Axle (Integral IV)
Shown with ARS and Rear Air Suspension.

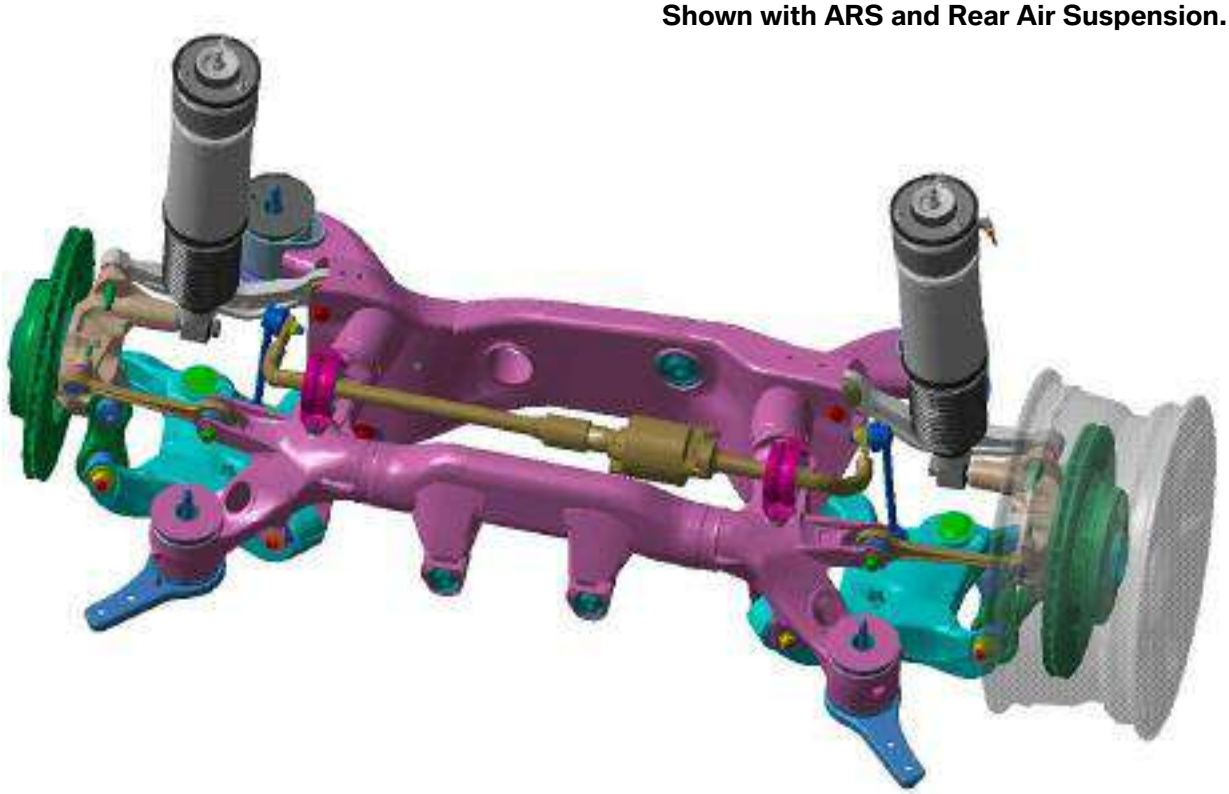

Some of the other improvements to rear axle design include the complete isolation of the rear axle through rubber bushings. This decreases the incidence of the transmission of road noise into the vehicle’s body and provides superior ride smoothness.

The chart on the next page list the various rear axle designs on BMW vehicles through the last few decades of production vehicles.

cardiagn.com

Development of BMW Rear Axles

Rear Axle Designation	Rear Axle Features	Models
HA 1	Semi-trailing arm axle	E12, E21, E28, E30, E36/5, E36/7
HA 2	Semi-trailing arm axle (with track-link)	E23, E24, E32 and E34
HA 3	Central "C" link rear axle	E36 (Except E36/5 and E36/7), E46, E83, E85 and **E89**
HA 4	Design Study Not used in production vehicles	N/A
HA 5	5-link rear axle (Dispersed double control arm axle)	E90 (E91, E92) E82, E88, E84 **F25**, **F30**
Integral I	Design Study Not used in production vehicles	N/A
Integral II	Design Study Not used in production vehicles	N/A
Integral III	5-link rear axle. Integral design with multi-link.	E31
Integral IV	Steel carrier, with spring on damper	E38
Integral IV	Aluminum carrier, spring on body, damper on axle carrier.	E39
Integral IV	Aluminum carrier	E39/2 (Touring)
Integral IV	Steel axle carrier, aluminum link with steel wheel carrier, spring and damper separated, but still supported on body.	E53
Integral IV	Aluminum axle carrier, spring and damper on wheel carrier.	E65/E66
Integral IV	Aluminum axle carrier, spring and damper on wheel carrier.	E6X (E60, 61, 63 and 64)
Integral V	Aluminum axle carrier, used with conventional or air springs and spring struts depending on the vehicle.	**E70 (E71, E72) F0x (F01, F02, F07, F10, F12, F13)**

Bold = Current Models

cardiagn.com

HA1 - Semi-Trailing Arm Axle

The illustration below shows a semi-trailing arm axle used on some of the early BMW models. As with all of the rear axle designs covered in this training module, this is a type of independent rear suspension. The suspension consists of two trailing arms connected to the rear axle beam (subframe).

The final drive and rear axle beam are connected to the unibody structure via three rubber mounts. These mounts serve to insulate drivetrain and suspension noises from the body structure.

There are coil springs which are mounted on the trailing arms. The upper portion of the coil springs use a rubber insulating pad which rests on the body structure.

The dampers are mounted to the hub carrier and the upper end attaches to the body. There is an “anti-roll” bar which attaches to the control arms via links.

The trailing arms on this type of suspension travel in a circular path. This causes changes to rear camber and rear toe as the suspension travels through “jounce and rebound” motions.

Future variations of BMW suspension system improve this action resulting in less camber and toe changes.

E30 - HA1 Rear Axle

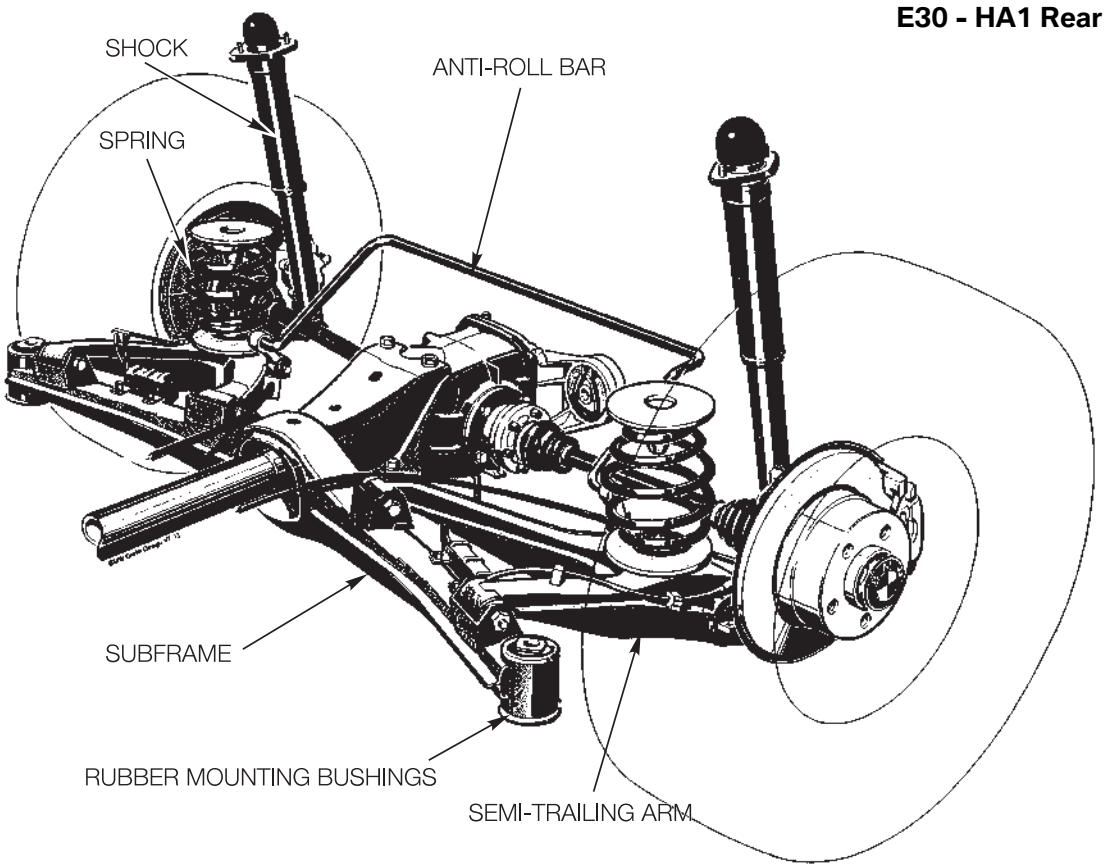

cardiagn.com

HA2 - Semi-Trailing Arm Axle (with Track Link)

This rear suspension design is mostly similar to the previous Semi-trailing arm axle. It is sometimes referred to as the “screw-link” or “helical-link” axle. The primary change is the installation of a “track-link”. This limits the total travel arc of the trailing arm from 20 degrees to 13 degrees. This reduces the camber and toe changes.

The spring was moved from the trailing arm to the damper. This rear axle is used on the E23, E24, E32 and E34. Both versions of the semi-trailing arm axle cannot be adjusted via standard methods.

E32 - HA2 Rear Axle

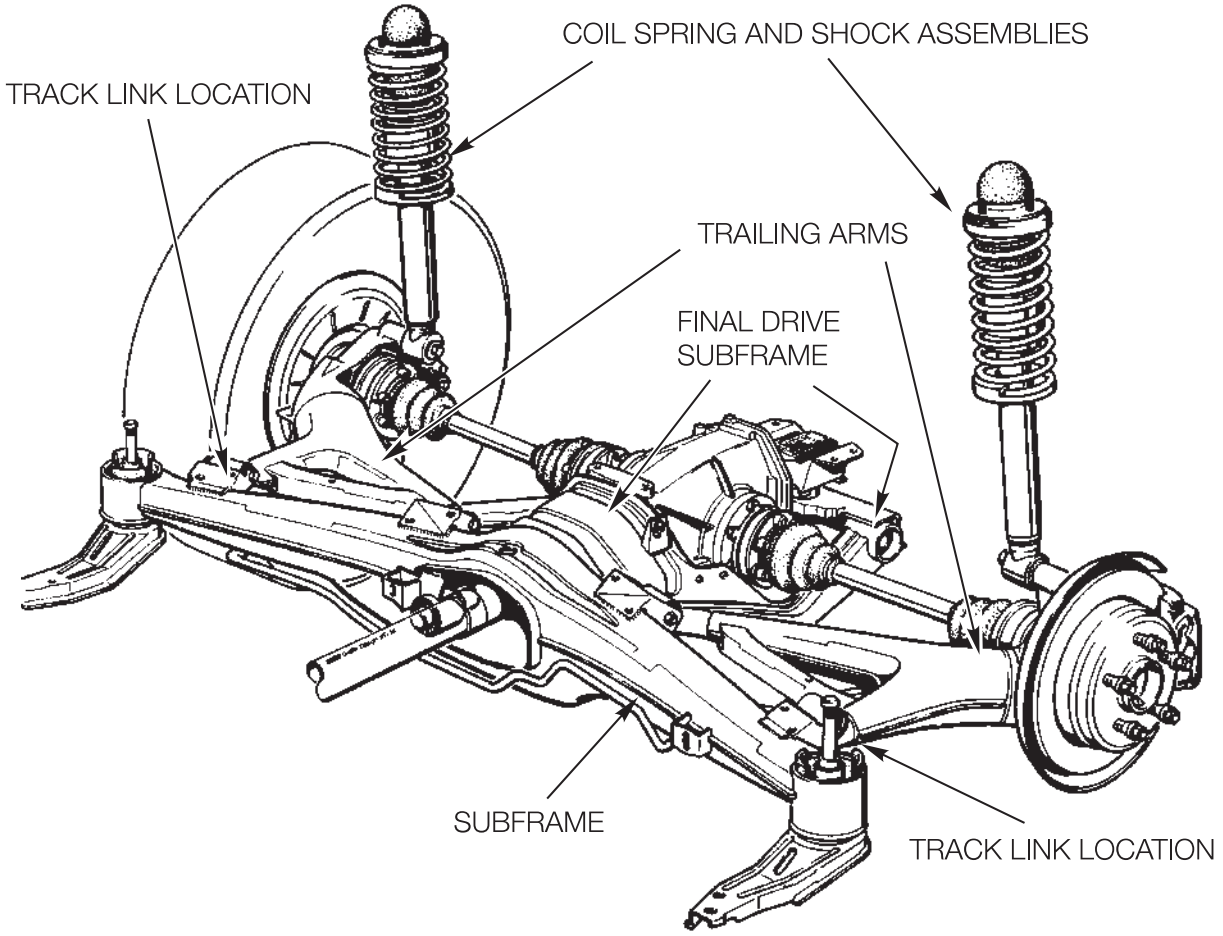

If a toe correction is required, there are offset bushings available through parts. For more information, refer to repair instructions in WebTIS or the Alignment section of this training course.

cardiagn.com

HA3 - Central “C” Link

E46 Rear Suspension

The rear suspension design on the E46 is a further development of the “Central Link” rear axle. The following modifications were carried out to optimize weight reduction and improve noise characteristics:

- The upper lateral link is now made from aluminum.
- The subframe (rear axle carrier) is now made from tubular steel.
- The differential is mounted to the frame with an hydraulic mount.

E46 - HA3 Rear Axle

The central link rear axle optimizes the following properties:

- Directional stability
- Alternating load response
- Self-steering response
- Lane change stability
- Transition response from cornering to straight ahead
- Rolling comfort

The designation HA3 does not refer to the three links but rather is a continuation of the development designation at BMW.

cardiagn.com

E83 Rear Suspension

The Central Link rear suspension has been adapted to the E83. The rear suspension is a further modification of the design used on the E46/16 (AWD/xi Models).

The E46/16 rear suspension has been adapted to the E83 as follows:

- Anti-roll bar secured to the rear axle carrier by clamps.
- Front of rear axle carrier suspension converted to special bolts with additional thrust washer.
- Thrust brace and tension arms.
- Surface of control arms are galvanized steel plates.
- Anti-roll bar link with ball joint attached directly to the control arm.
- Dampers with three point flange (bolt) plate.

HA3 Rear Axle

Index	Explanation
1	Tension arm
2	Central arm (right)
3	Upper lateral link (right)
4	Rear axle carrier (subframe)
5	Lower lateral link (left)
6	Thrust brace

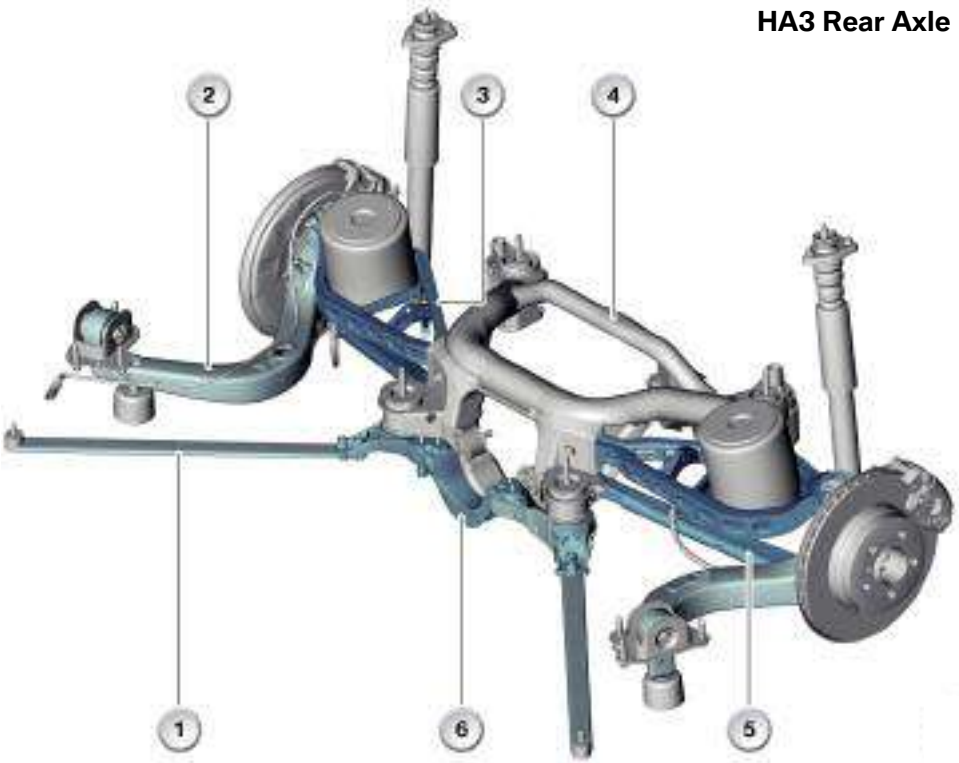

When removing or lowering the rear axle, the handbrake cables (routed through the rear axle carrier and the body console) must be disengaged before the rear axle is lowered. This is to prevent shearing of the handbrake cables.

cardiagn.com

E85 Rear Suspension

The rear suspension on the E85 is taken from the E46 with some minor changes for the roadster. The track width has been increased by 30 mm. A reinforcement plate has been added to increase rigidity. Due to underbody aerodynamics, a duct has been added to direct airflow to the differential. The differential cover has cooling fins to help keep the differential within the proper temperature range.

E85 HA3 Rear Axle

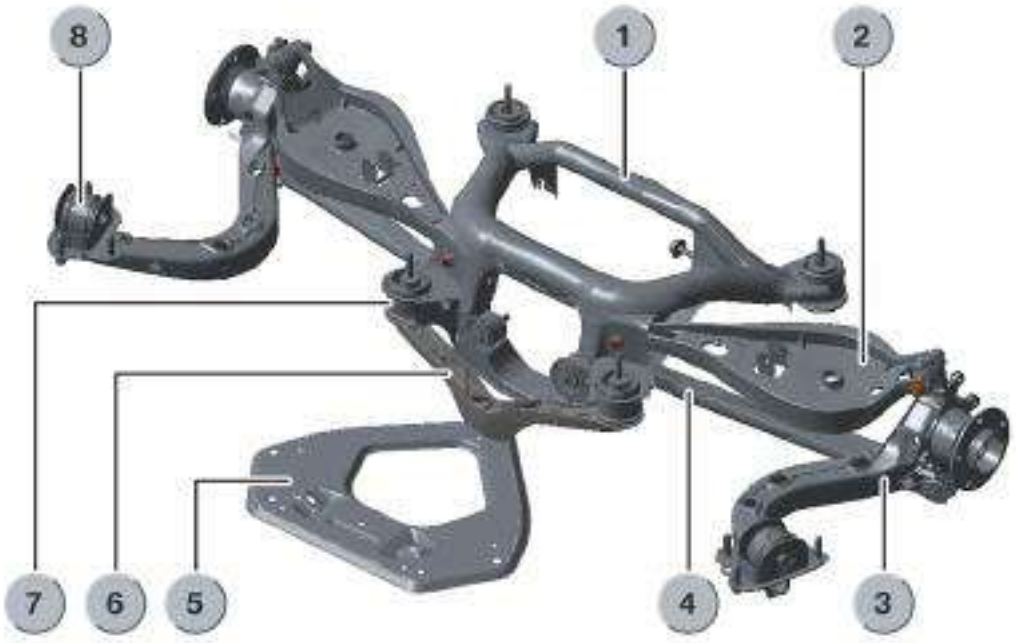

Index	Explanation	Index	Explanation
1	Rear subframe section	5	Reinforcement plate
2	Left upper control arm (lateral link)	6	Reinforcement support bracket
3	Central arm (left)	7	Rear subframe mounting bushings
4	Lower lateral link (left)	8	Central arm bushing (right)

cardiagn.com

Rear Suspension Adjustments (HA3 Central Link Axle)

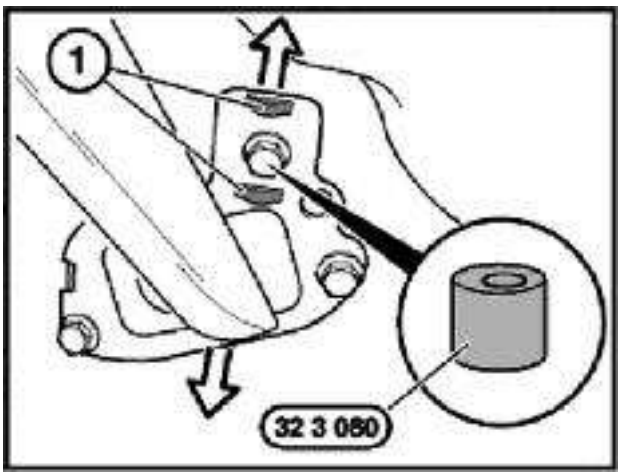

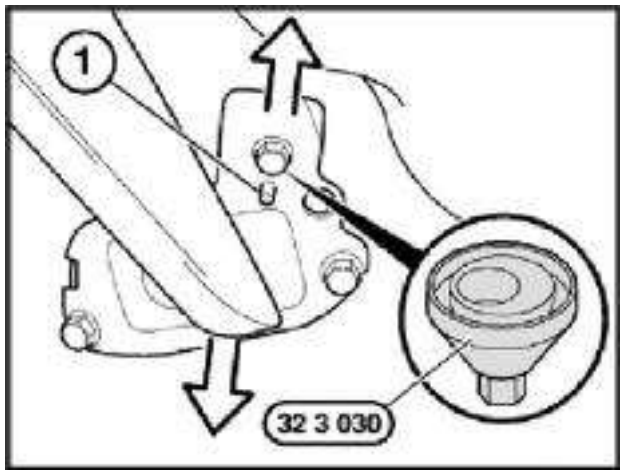

Rear Toe

Toe is adjusted by moving the forward central arm bushing mount with a special tool. The tool part number varies between models. Tool number 32 3 080 is used for the E36. The E46, E8, E83, E89 use tool # 32 3 030. These tools are not used for the 318ti and Z3 as the rear suspensions on the vehicles are different (HA-1).

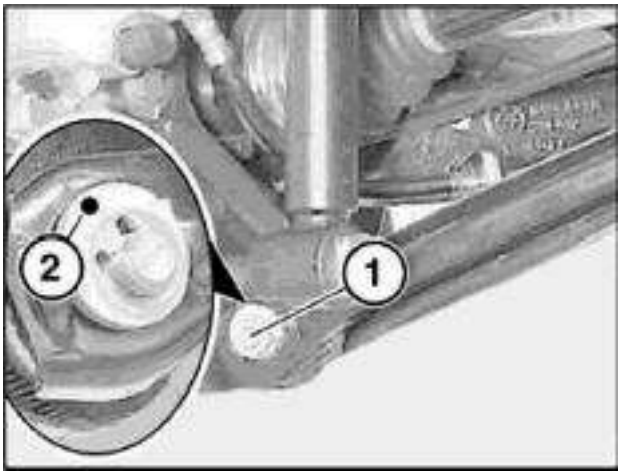

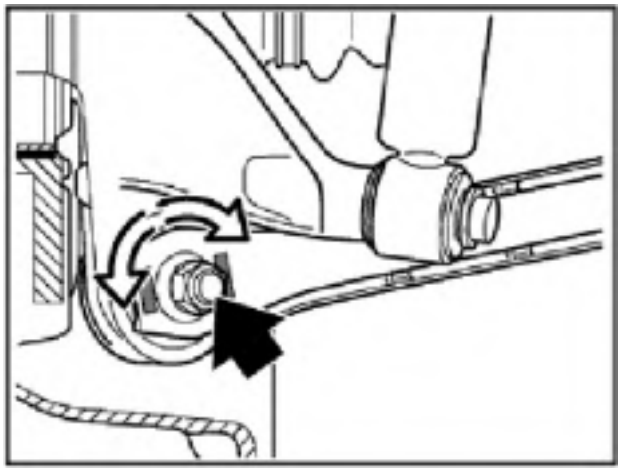

Rear Camber

Rear Camber is adjusted by rotating an eccentric bolt located at the outer end of the rear lower lateral link. No Special tools are required to make the Camber adjustment.

cardiagn.com

Integral Axle (III and IV)

The “integral axle” is a multi-link rear suspension which was introduced on the E31. Subsequent variations of this design have been utilized on the 5 and 7 series vehicles including the E53 SAV and E39 Sportwagon. These suspensions incorporate what is called “elastokinematics” that allow each wheel to move and flex individually without loads and forces through the subframe to the opposing wheel.

The integral axle has been used on the following vehicles:

- E31 (8-series all models)
- E38 (7-series all models)
- E39 (5-series all models)
- E53 (X5 all models)
- E52 (Z8)
- E6x vehicles (including E65, E66, E60, E61, E63 and E64)
- X Series vehicles (including E70, E71, E72)

E31 Rear Suspension (Integral III)

The first BMW vehicle to use the “multi-link” Integral III rear suspension was the E31. The E31 version of this suspension uses a 5-link design rather than the subsequent 4-link design of later models.

The “fifth-link” was the trailing arm which was deleted as of the E38 and E39 models. The E31 design placed the rear springs between the body and the upper lateral link. When introduced, this suspension was very innovative for it’s time and provided improved directional stability and marked an advance in driving comfort. Future models reaped many benefits from this suspension design.

Integral III Rear Axle

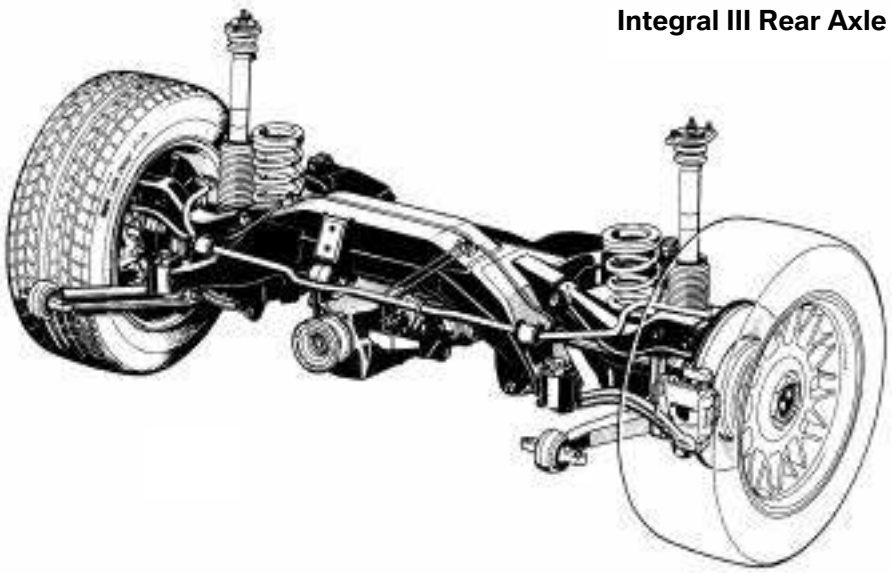

cardiagn.com

E38 / E39 Rear Suspension (Integral IV)

The E38 and E39 models use a modified version of the E31 multi-link rear suspension system. The system was modified to be more compact yet provide the same handling and ride characteristics as the E31 system.

The trailing arm was eliminated and all suspension mountings are done to the sub-frame of the vehicle. The springs were moved to the dampers. The changes from the E31 provided further improvements to the integral rear axle including weight savings and improved noise characteristics.

Integral IV Rear Axle

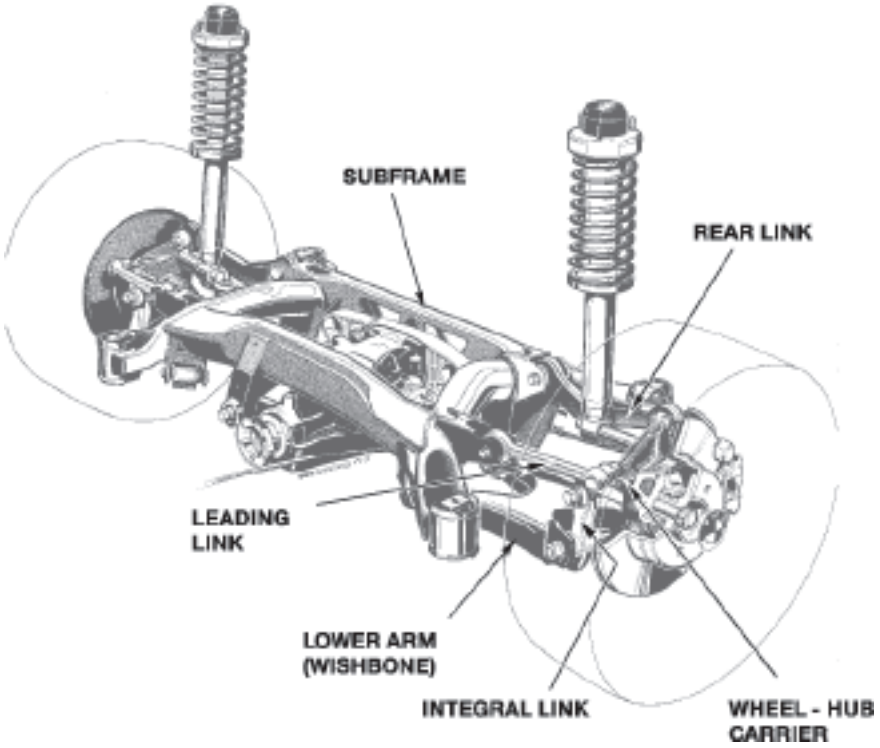

cardiagn.com

E39 / E53 Rear Suspension (Integral IV)

The E39 Sportwagon/E53 X5 rear suspension is the “integral” multi-link design taken from the E38/E39 vehicles. Several components are made from aluminum to reduce the unsprung weight. The X5 has the optional EHC or EHC II dual axle air suspension.

The rear axle sub-frame is mounted to the body through four bushings (larger than E38) for increased load and comfort. The rear differential is mounted through three rubber bushings, two in the front and one hydro-mount in the rear. The wheel bearings are similar to the E39 but incorporate different seals - designed for off-road use.

Integral IV Rear Axle

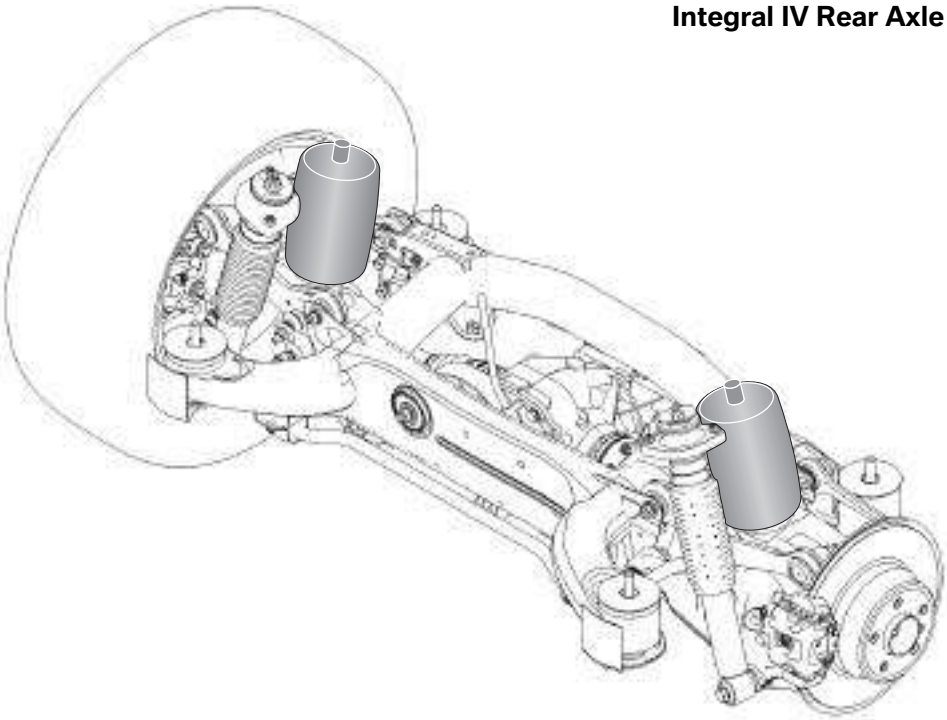

The E39 Sportwagon shares the same basic rear suspension design as the E53 X5.

The standard rear suspension of the E39 Sport wagon follows the design characteristics of the four link elastokinematic system of the E38/E39 sedan vehicles.

The main design difference is the separation of the coil springs and dampers.

- The coil springs are positioned between the perches of the wheel carriers and the underside of the rear floor pan.
- The shock absorbers are positioned diagonally between the lower lateral control arm and the rear axle sub frame.

cardiagn.com

This configuration provides the wide, uniform load space in the cargo area.

Since the shock absorbers are now mounted directly to the sub frame, the sport wagon requires unique sub frame hydro mounts. The hydro mounts contain a fluid that helps to suppress road/suspension noise and vibrations from transmitting into the vehicle body.

Integral IV Rear Axle

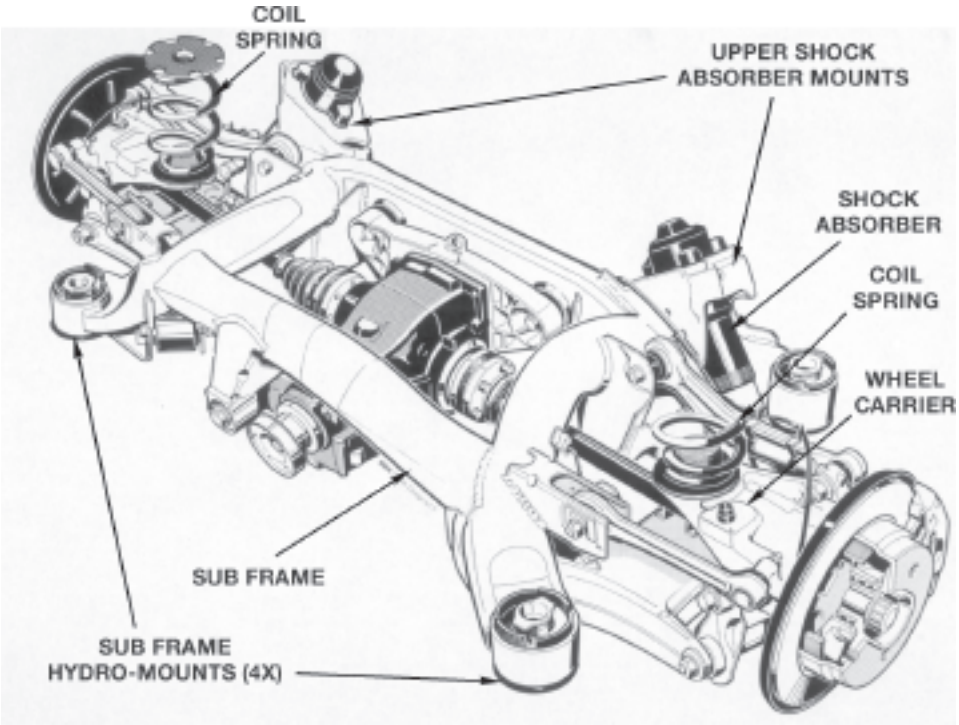

The hydro mounts require new special tools for removal and replacement. Refer to ISTA for more information special tools section.

cardiagn.com

E6x Rear Suspension (Integral IV)

The rear suspension of the E6x vehicles which include the 5, 6 and 7 series vehicles remained mostly unchanged. The design is a slightly modified version of the Integral IV rear axle from the previous generation 5 and 6 series.

Provisions have been made to accommodate the Active Roll Stabilization System, the rear air suspension system (EHC) and the Electronic Damping Control System (EHC).

The subframe assembly continues to be made from aluminum. Otherwise, the rear suspension is very similar to previous designs.

Integral IV Rear Axle

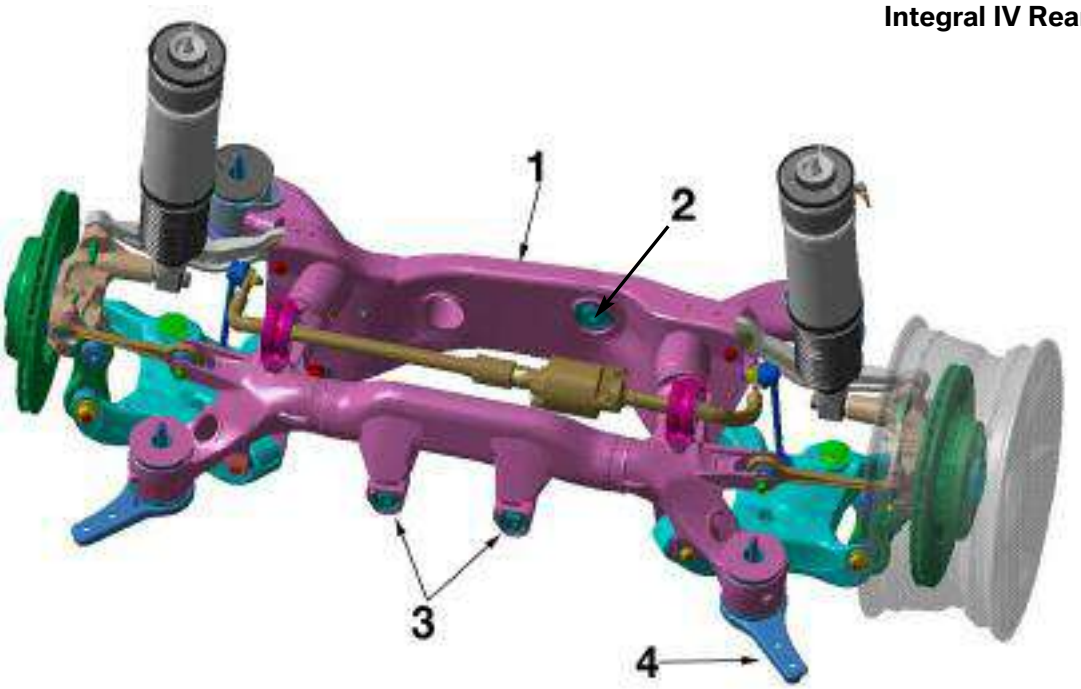

Index	Explanation	Index	Explanation
1	Rear subframe assembly	3	Front differential mounting
2	Rear differential mounting	4	Thrust plate

cardiagn.com

Rear Suspension Adjustments (Integral Rear Axle III/IV)

The integral rear axles (III and IV) have accommodations for the adjustment of both rear **Toe** and rear **Camber** angle. The adjustments consist of eccentrics that can be adjusted using standard hand tools. The only exception is the E53 X5, which due to space limitations needs special wrenches to access the toe eccentric.

E53 Camber Adjustment
(other integral axles similar)

E53 Toe Adjustment
(other integral axles similar)

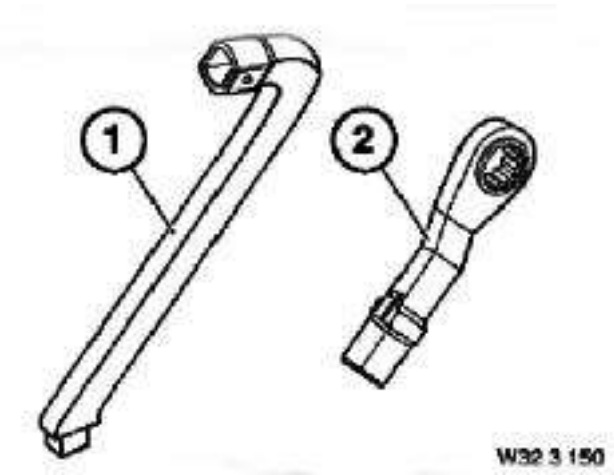

E53 Rear Toe Adjustment Tools

cardiagn.com

NOTES PAGE

cardiagn.com

Current Rear Axles

HA3 - Central “C” Link - E89 Rear Suspension

A version of the rear axle known from the E85 (See Rear Axle History section) with the development designation HA 3 (Central Link) is fitted in the E89 Z4.

The Central Link rear axle is an intricately constructed, weight and space saving, multi-link rear axle. The wheels are controlled by two control arms and one semi-trailing arm that is mounted at the central point on the body. The precise interaction between the semi-trailing arm and control arm ensures that the wheels remain in the best possible position with respect to the road surface, thus providing outstanding directional stability. The flexible link bushings ensure exceptional driving stability while cornering, providing the vehicle with excellent rolling and acoustic comfort.

E89 Central Link HA 3 Rear Axle

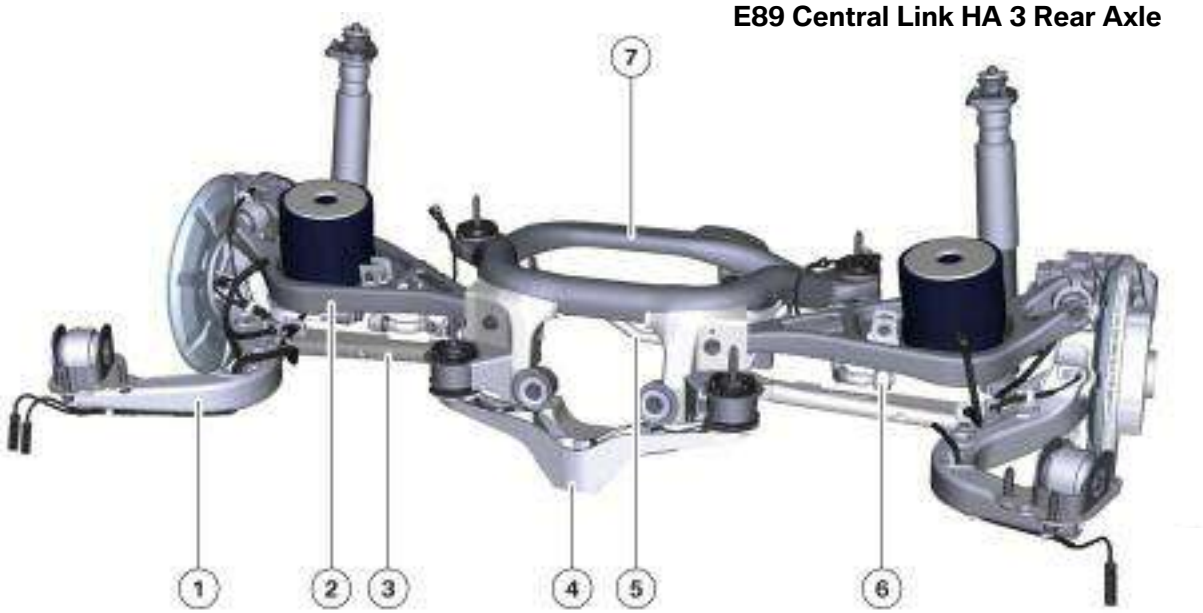

Index	Explanation
1	Semi-trailing arm (right)
2	Upper control arm
3	Lower control arm
4	Thrust brace
5	Stabilizer bar
6	Stabilizer link
7	Rear subframe axle carrier

See Central link axle section for information regarding rear toe and camber adjustment. Always refer to repair instruction available on ISTA for specific details.

cardiagn.com

HA 5 Rear Axle

The new HA 5 rear axle is the newest development in rear axle technology. Although this design was first installed on the E87 1 Series (not sold in the US). It was introduced to the US market with the launch of the E90 3-Series and has since been installed in the E82, E88, F25, F30 and E84.

Designed as a multi-link independent rear suspension axle with 5 different link arms it is also referred to as five-link rear axle. The designation "HA 5" does not refer to the five links but rather represents the consecutive development designation used at BMW.

As compared to the HA 3 and HA 4 rear axle, which were made mostly from aluminum, the HA 5 rear axle is made primarily from high strength steel. The wheel carrier is cast from GGG 40.

E90 HA 5 Rear Suspension

Minor differences exist between the HA 5 link rear axle versions depending on the vehicle:

- On the xDrive versions the wheel carrier is modified slightly as it utilizes bigger wheel bearings.
- In all variants the rear axle transmission mounting is matched to the relevant drivetrain.

cardiagn.com

HA 5 Rear Axle Layout

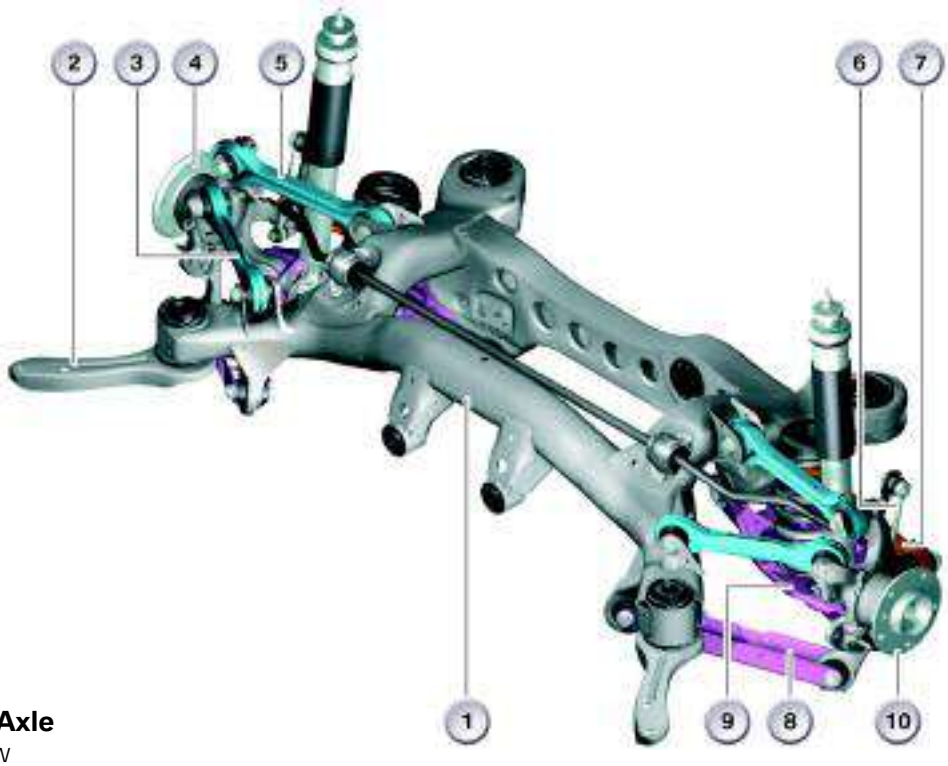

HA 5 Rear Axle
front left view

Index	Explanation	Index	Explanation
1	Rear axle carrier	6	Stabilizer link
2	Thrust rod	7	Toe link
3	Traction strut	8	Semi-trailing arm
4	Wheel hub	9	Camber link
5	Control arm	10	Wheel carrier

HA 5 Axle
view from rear left (top)

cardiagn.com

Top View of Left Rear Axle

The two upper links (blue in the illustration) form a triangle in the top view as do the two lower links (purple in the illustration).

The rear link (orange in the illustration) represents the toe rod.

HA 5 Rear Axle
inner right view

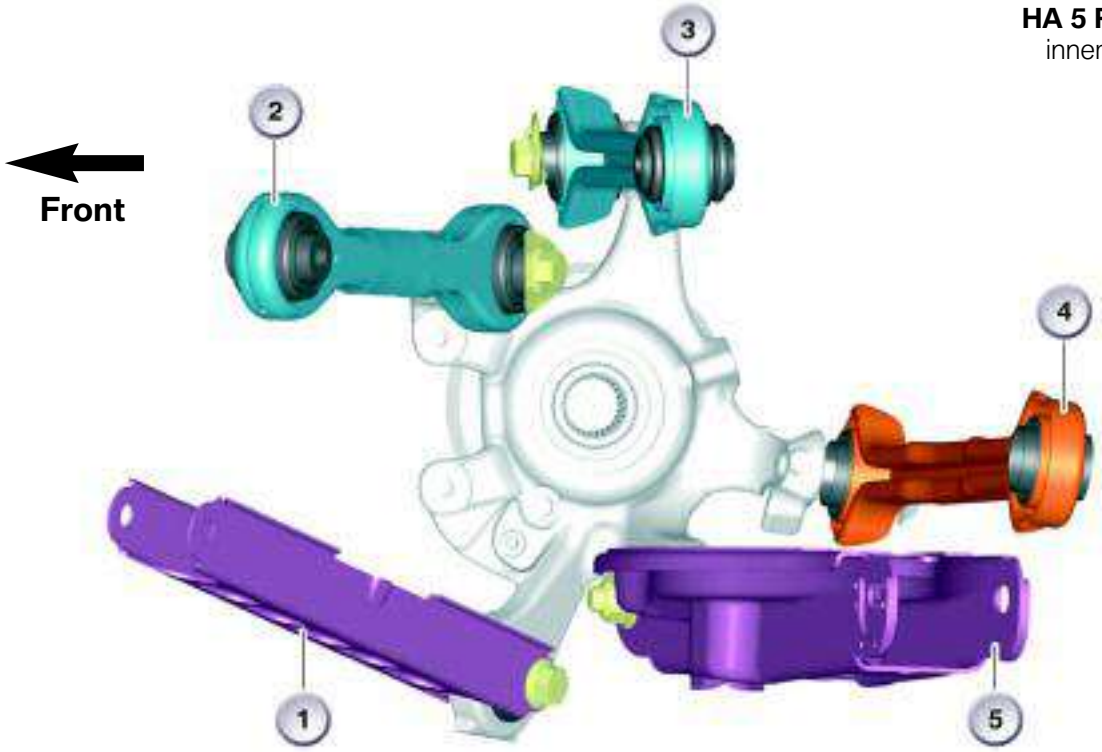

Index	Explanation	Index	Explanation
1	Semi-trailing arm	4	Toe link
2	Traction strut	5	Camber link
3	Control arm		

cardiagn.com

Advantages

Compared to previous rear axles the HA 5 offers the following advantages:

Manufacturing Costs

The lower costs are attributed to the fact that the use of high strength steel has made it possible to reduce the wall thicknesses of the rear axle carrier and the links.

Compared to the Integral IV, a considerable cost saving measure has been utilized by manufacturing the entire axle from high strength steel plus the weight of the HA 5 rear axle is not excessively high.

Light Construction

A bending moment occurs only in the camber link, as it provides the support function for the spring and damper. The remaining four links are not subjected to moments of force thereby enabling a lightweight and rigid design.

Thanks to the straight design of the links and the connection by means of ball joints, except for the camber link, the wheel control with this axle is subject to only minimal elasticity and is very precise.

Production

The HA 5 rear axle can be completely pre-assembled and adjusted with the brake system as well as the suspension and damping.

Kinematics

The very small positive kingpin offset guarantees less sensitivity to longitudinal forces even in connection with wide tires.

The relatively large caster ensures a defined degree of lateral force understeering and therefore improves vehicle handling/stabilization and offers faster response.

The change in toe as part of the suspension action enables outstanding directional stability with a relatively short wheelbase and exceptional self-steering characteristics while cornering.

The change in camber as part of the suspension action is selected in order to establish an optimum camber with respect to the road surface while cornering.

The long toe link has a positive effect on the toe-in characteristics over the spring travel range.

A low roll center has a particularly beneficial effect on the rolling motion.

The "propping" effect while cornering has been largely minimized by improving the roll center change rate.

cardiagn.com

The braking support has been set to 70%. Racing cars generally have a support angle of 0% in order to constantly achieve maximum contact force. On these vehicles, the disadvantage of a dive motion while braking and starting off is compensated by the taut suspension. The braking support (anti-dive) realized on the E90 represents an optimum compromise between comfort, safety and driving dynamics requirements.

The use of five links enables free selection of the pivot axle for the design layout. This means that the movement of the wheel in interaction with the suspension can be optimized without compromise under braking, acceleration and lateral forces. This largely determines all important variables such as toe, camber, brake support (anti-dive) angle, roll center and roll center change rate.

Crash Requirements

The HA 5 rear axle permits a considerably more favorable progression of the side member, resulting in specific advantages particularly at low impact speeds.

Added to this, the large rear axle carrier is connected directly to the rigid frame side member, allowing it to transmit the applied crash forces more favorably. The semi-trailing arm features crash beading (in the semi-trailing arm of the HA 5 rear axle) to ensure the fuel tank is not damaged.

Rigidity / Acoustics

The rear axle carrier of the HA 5 rear axle extends up to the rigid frame side members of the body with its axle mounting points and even up to the sill with its thrust rods. This provides a very large support face for the applied forces and moments. The resulting advantages include, considerably lower stress and strain on the body (rear axle breakaway) and the option of designing the rear axle bearing mounts relatively soft. This arrangement and the double flexible mounting, provide outstanding insulation against road noise and tire rolling noise.

cardiagn.com

Setting

Toe and Camber adjustment points:

The two upper links (blue in the illustration) form a triangle in the top view as do the two lower links (purple in the illustration). The rear link (orange in the illustration) represents the toe rod.

The rear axle carrier and the links are made from high strength steel. The wheel carrier is cast from aluminum alloy.

Index	Explanation
1	Toe adjustment eccentric
2	Camber adjustment eccentric

E9X/E82 Rear Axle Adjustments
rear view of left rear

Minor differences exist between the HA 5 versions being used on the E9X and E82 variants. The rear axle of the E82 is fitted with modified wheel hubs. As a result, the rear track width of the E82 has been widened by 20mm in comparison to the E9X. The extended rear wheel arches, combined with the wider rear track width emphasizes this vehicle's rear-wheel drive characteristics.

The springs and dampers differ from those in the E90 in that they have been adapted to the E82's vehicle weight. The front axle of the E82 is fitted with a hollow-type anti-roll bar for weight reduction and a sport tuned suspension is available as an option on the BMW 128i (standard equipment on BMW 135i).

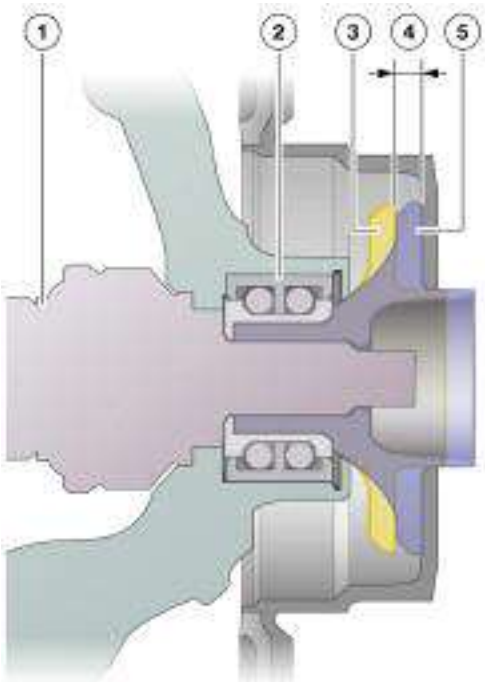

Index	Explanation
1	Drive shaft
2	Wheel bearing
3	E90 wheel hub
4	Widening of track width (+10 mm each side)
5	E82 wheel hub

Wheel Hub on the Rear Axle,
Difference between E82 - E90
(Cut away view)

cardiagn.com

F25 Rear Suspension

The HA 5 five-link rear axle installed in the F25 is derived from a double wishbone rear axle with rear mounted track rod. Although the engineering design principle of the rear axle is based on the one used in the E8x and E9x vehicles, this version is characterized by its low installation space requirement and light weight of its components.

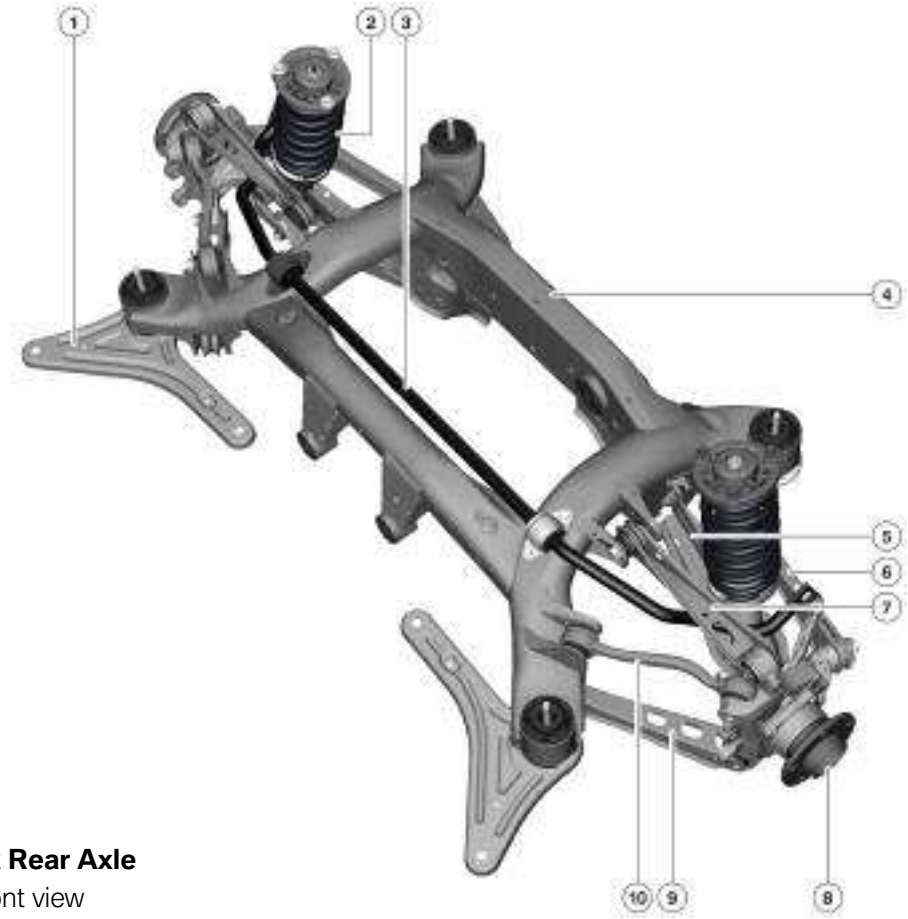

F25 Five-link Rear Axle
Top 3/4 left front view

Index	Explanation	Index	Explanation
1	Compression strut	6	Toe link
2	Spring strut	7	Upper wishbone
3	Stabilizer bar	8	Wheel hub
4	Rear axle carrier	9	Camber link
5	Lower wishbone	10	Control arm

The terminology has changed due to the design changes implemented on the F25 rear axle when compared to the E90 HA 5.

cardiagn.com

In addition to a particularly precise wheel control, this design delivers outstanding driving dynamics in relation to the following:

- Directional stability, accuracy
- Load change response
- Self-steering response
- Lane change stability
- Steering movement (transitional response from cornering to straight-ahead driving).

In contrast to the E84 and E9x series, spring struts are installed at the rear axle instead of the split arrangement of springs/dampers. A high suspension ratio has been achieved through the installation of spring struts.

The optimized elastokinematics ensures ride comfort as the use of small but effective control arms means that the rear axle hardly reacts to interference.

The flat space-saving design of the axle with wide spring struts mounted on the outside results in a flat luggage compartment floor with generous loading width.

Low unsprung masses have been implemented using innovative sheet-metal control arm technology.

F30 Rear Suspension

F30 rear suspension is a five-link rear axle (HA5) design which is also based on the E90 now has a steel construction and has been significantly enhanced.

The elastokinematics installed in the five-link rear axle have been coordinated specifically to the F30 chassis.

Precise and superior wheel control is possible in all driving situations due to the large spring travel range. Therefore it has been possible to resolve the conflicting objectives of driving dynamics and comfort by:

- The flexible suspension of rear axle differential at rear axle support and the flexible bushing of rear axle support at body (2x flexible bushings) have been specifically coordinated to the F30 chassis.
- Maximum support base width for the rear axle support.
- Significant increase in track width when compared to E90.
- Optimum connection of body suspension and damping.

cardiagn.com

E84 Rear Suspension

A five-link rear axle HA 5 as known from the 1 series and 3 Series is also installed in both E84 models (sDrive/xDrive).

The HA5 in the BMW X1 offers enhanced comfort due to a double-elastic bushings and a large rear axle support base. Furthermore, the design principle of the HA5 is light weight and very compact.

The five-link rear axle is mainly derived from a twin control arm rear axle with the track rod located in the rear, whereby the upper and lower A-arms were replaced by two individual arms each. The advantage of this is that, regardless of the installation space situation, it is possible to freely specify the effective virtual kinematics point. The result of this design coordination is elastokinematic properties that permit exact wheel control across significant spring travel, which is required for the desired driving properties. In addition, due to small effective lever arms, the rear axle barely reacts to road interferences.

The large support base for toe and camber on the wheel carrier side and the extremely rigid trailer arms, as well as the stiff rear axle support and the connection to the body by means of strut rods ensure highly precise wheel control. This is the prerequisite for agile overall coordination of the BMW X1. The use of high-torque engines and the properties of the run-flat tires were taken into consideration when designing the large rear axle support base resulting in enhanced driving properties as well as superior sound insulation.

The BMW X1 uses many of the rear axle components of the BMW 3-Series Touring (E91). The hub carrier and the upper wishbone were redesigned (due to the height difference in the BMW X1) as well as the rear axle support rear cross member (with the connection for camber link and toe link); the remaining components are identical to the rear axle support in the BMW 3-Series Touring.

The HA5 provides the best prerequisites for the particularly space-saving rear concept (location of rear seat position, fuel tank, and luggage compartment). Thus, a comparably large through-loading width as well as ample legroom can be achieved in the rear.

cardiagn.com

E84 X1 Five-link Rear Axle

Top 3/4 left front view

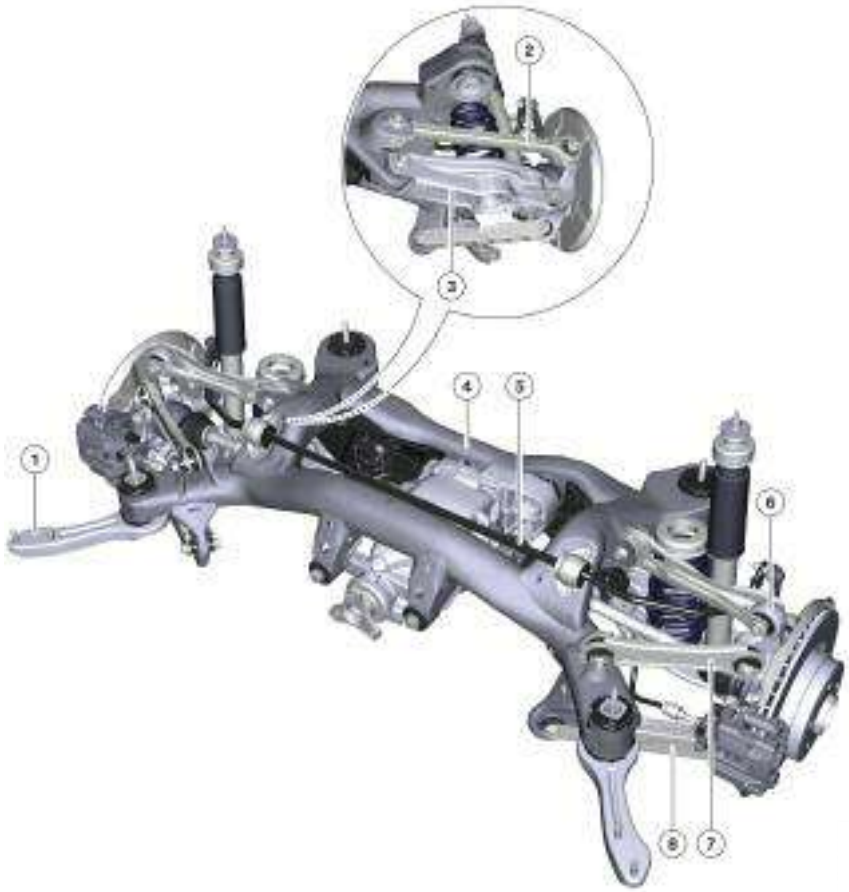

Index	Explanation	Index	Explanation
1	Thrust Rod	5	Stabilizer bar
2	Toe link	6	Control arm
3	Camber link	7	Traction strut
4	Rear axle carrier	8	Semi-trailing arm

cardiagn.com

Integral IV - E7x Rear Suspension

The rear suspension in the E70 is a further-developed integral IV design based on the E53 rear axle. It is characterized by improved driving dynamics without compromising comfort and driving safety. With this axle it was possible to increase the width and depth of the load area compared to the previous design (See Rear Axle History section).

The result is a considerably larger and more functional load space (third row of seats) particularly through the use of the single-axle air spring (rear axle air suspension). This design layout guarantees brilliant road handling characteristics irrespective of the vehicle load and at a constant ride height.

Safety functions are defined by the superior vehicle control characteristics. Effective de-coupling of the road and drivetrain guarantees outstanding levels of acoustic and vibration comfort.

E70 Integral IV
left front view

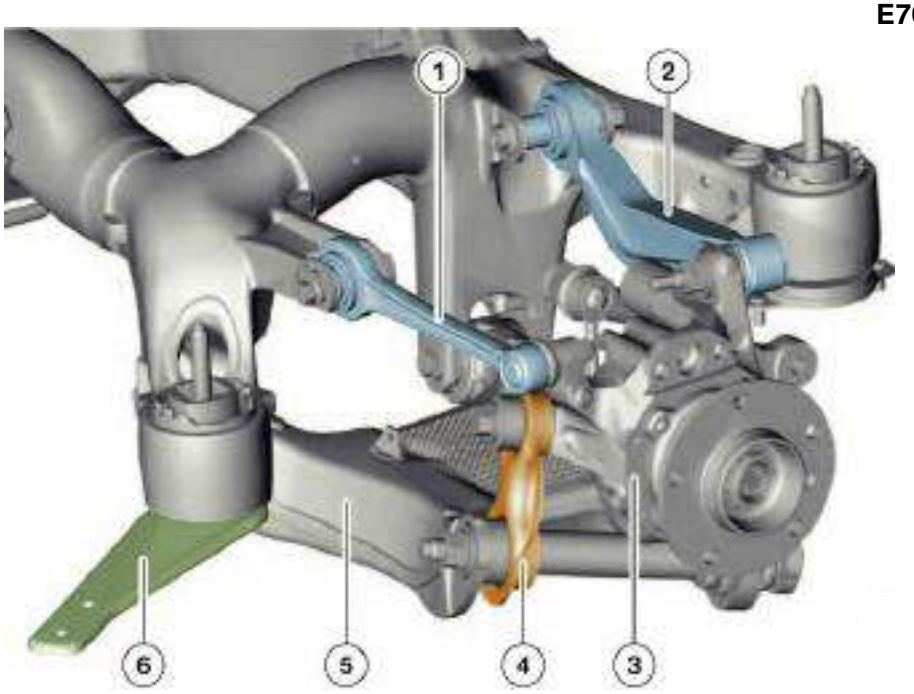

Index	Explanation	Index	Explanation
1	Traction strut / upper radius arm	4	Integral link
2	Control arm	5	Swinging arm
3	Wheel carrier	6	Tension strut

cardiagn.com

The dynamic and drive forces applied through the wheel contact point into the suspension are taken up by the wheel carrier, rear axle carrier and four control arms. The design layout reduces the flexible pulling action in the wheel carrier and therefore enables lengthways damping of the wheel control, which is important for rolling comfort, by means of soft front link brackets on the rear axle carrier.

Due to the position of the spring on the wheel carrier, it is no longer necessary to support the weight of the vehicle on the rubber mounts on the rear axle carrier. The optimum lengthwise damping and the favorable spring position facilitate effective isolation of rolling and drive noise while significantly contributing to the refined smooth and quiet vehicle running characteristics.

E70 Integral IV Rear Suspension

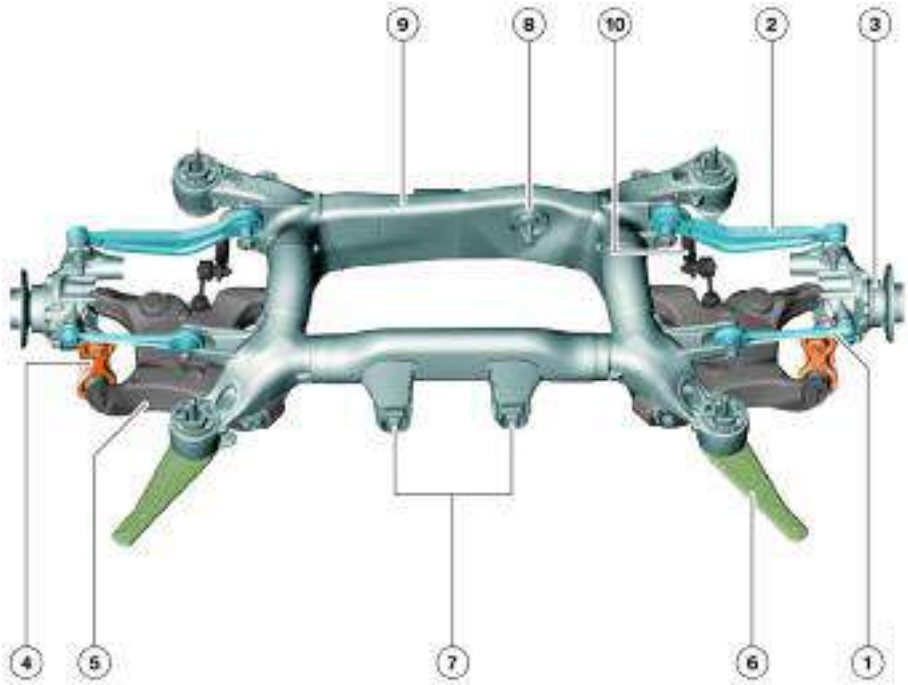

Index	Explanation	Index	Explanation
1	Traction strut	6	Tension strut
2	Control Arm	7	Front differential mounting
3	Wheel carrier	8	Rear differential mounting
4	Integral link	9	Rear axle carrier
5	Swinging arm	10	Anti-roll bar

cardiagn.com

Compared to the E53, the rear axle of the E70 was adapted to the requirements of the larger dimensions, higher overall weight, increased power/torque, the BMW run flat safety system and the demanding objectives in terms of driving dynamics and comfort. The main criteria that governed the selection of materials included: component weight, production process (cold forming, casting properties, welding properties), strength and deformation characteristics as well as corrosion resistance. The resulting advantages include:

- Outstanding driving dynamics, further increased compared to the E53, without compromising comfort and driving safety.
- Distinctly larger and more functional load area by increasing the effective load width and depth.
- Level control (1-axis air suspension) ensures constant ride-height and driving characteristics irrespective of the vehicle load.

These design enhancements have been carried over to all current E7x vehicles and served as a base for the development of the Integral V rear axle use in current F0x/F1x vehicles.

See Rear Suspension Adjustments (Integral III/IV Rear Axle) in the Rear Axle History section for information regarding rear toe and camber adjustment. Always refer to repair instruction available on ISTA for specific details.

NOTES

cardiagn.com

Integral V - F0x / F1x Rear Suspension

The Integral V rear axle design was introduced with the launch of the F01/02 in late 2008. This suspension design differs from the previous 7 Series (E65) which used the familiar and already proven "Integral IV" (The Integral IV rear axle design was introduced on the E38 in 1995 and has been in use on subsequent 5, 6 and 7 series models as well as in X6 and both generations of the X5).

Safety functions are defined by the superior vehicle control characteristics. Effective decoupling of the road and drive train guarantees outstanding levels of acoustic and vibration comfort.

The Integral V rear axle has been specifically tuned to the specific requirements of the F0x/F1x vehicles like:

- Larger vehicle dimensions
- Greater total weight
- Greater drive output
- Higher drive torque
- Runflat tires.

Design Features

The demanding objectives related to driving dynamics and comfort have been correspondingly adapted while integrating the required driving dynamics systems.

The Integral V rear axle primarily fulfils the driving dynamics functions of the mechanical chassis and suspension, i.e. define elastokinematic wheel control in all relevant driving situations.

The innovative BMW development of the Integral Active Steering (IAL), however, makes specific demands in terms of the **elastokinematics** of the integral-V rear axle: To a certain extent, the wheels on the rear axle must be able to execute steering movements.

Kinematics and Elastokinematics

The spatial arrangement of the pivot points or pivot axes of the arms and links is known as kinematics. This term applies to components that are assumed to be non-deformable.

Elastokinematics takes into account the flexibility at least of the rubber-metal mounts, often of the ball joints and rarely of the components.

Various arms define the horizontal plane of the rear axle wheel suspension at the axle carrier and the wheel carrier. These arms are mounted such that they can rotate about an approximately horizontal axis of rotation and therefore allow vertical movement of the wheel carrier.

cardiagn.com

Kinematics is primarily of significance in terms of vehicle handling. The kinematics is arranged in such a way that defined camber and toe-in angles are achieved between the wheel and road surface in response to the suspension and steering.

Kinematics is superimposed by elastokinematic effects. These elastokinematic effects occur as the movement points and movement axles are spatially displaced by the effect of the forces at the wheel.

New Challenge for the Integral Rear Axle - Integral Active Steering

In terms of the F01/F02, the development of integral active steering (IAL) as a BMW driving dynamics innovation, posed a completely new challenge to the engineers and the tried and tested integral IV rear axle. The integral active steering is made up of the active steering and the rear axle slip angle control (HSR).

Components of the Integral V Rear Axle with Integral Active Steering

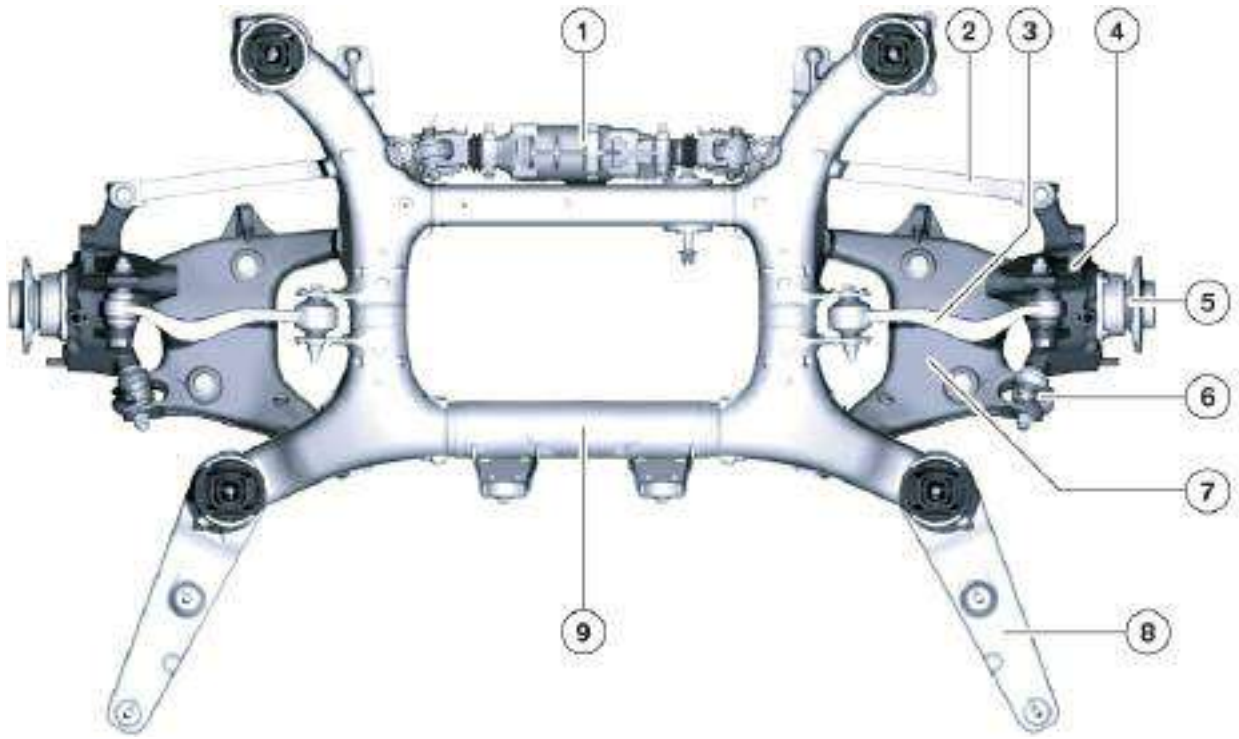

Index	Explanation	Index	Explanation
1	Actuator, rear axle slip angle control (HSR)	6	Integral link
2	Track rod, left	7	A-arm (swinging arm)
3	Transverse control arm, top	8	Thrust strut
4	Wheel carrier	9	Rear axle carrier
5	Wheel bearing		

cardiagn.com

The principle of the Integral V rear axle makes it possible to resolve the conflict between driving dynamics and comfort. The dynamic and drive forces applied through the wheel contact point into the wheel suspension are taken up by the wheel carrier, rear axle carrier, three links and an A-arm (swinging arm).

Integral V Rear Axle without Integral Active Steering

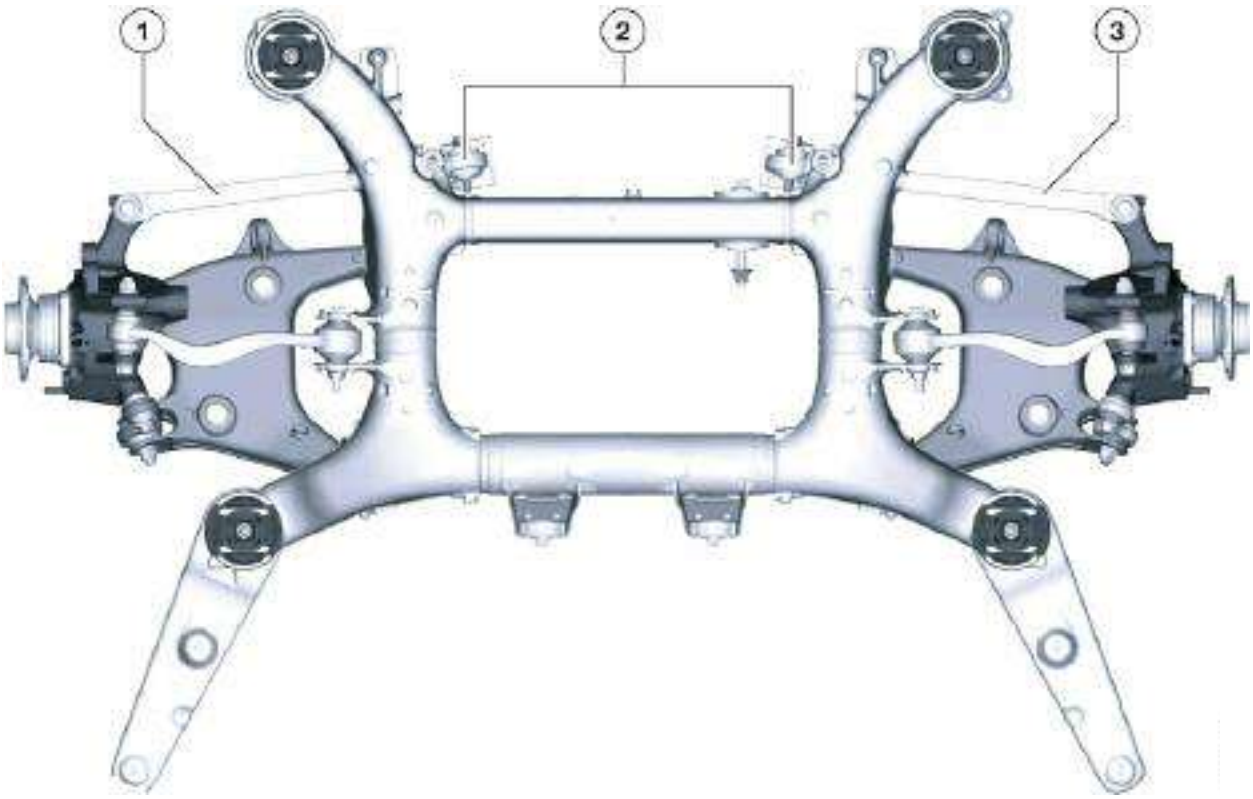

Index	Explanation	Index	Explanation
1	Track rod, right	3	Track rod, left
2	Bearing assemblies, track rod		

The design layout reduces the flexible pulling action in the wheel carrier and therefore enables lengthways damping of the wheel control, which is important for rolling comfort, by means of axially soft front link mounts on the rear axle carrier.

Thanks to the position of the spring on the wheel carrier, it is no longer necessary to support the weight of the vehicle on the rubber mounts on the rear axle carrier.

This optimum spring position in conjunction with specific lengthways control guarantees effective isolation of rolling and drive noise while significantly contributing to the refined smooth and quiet vehicle running characteristics.

cardiagn.com

The main criteria that governed the selection of materials included component weight, production process (cold forming, casting properties, welding properties), strength and deformation characteristics as well as corrosion resistance.

Two versions of the Integral V rear axle are available. Bearing assemblies are fitted on the two track rods if the vehicle is not equipped with integral active steering.

The revolutionary further development of the Integral IV rear axle culminates in the BMW patented Integral V rear axle. The new arrangement of the arms and links as well as the use of ball joints facilitates a rear axle with steering capabilities.

Arm Arrangement, E65 integral IV Rear Axle

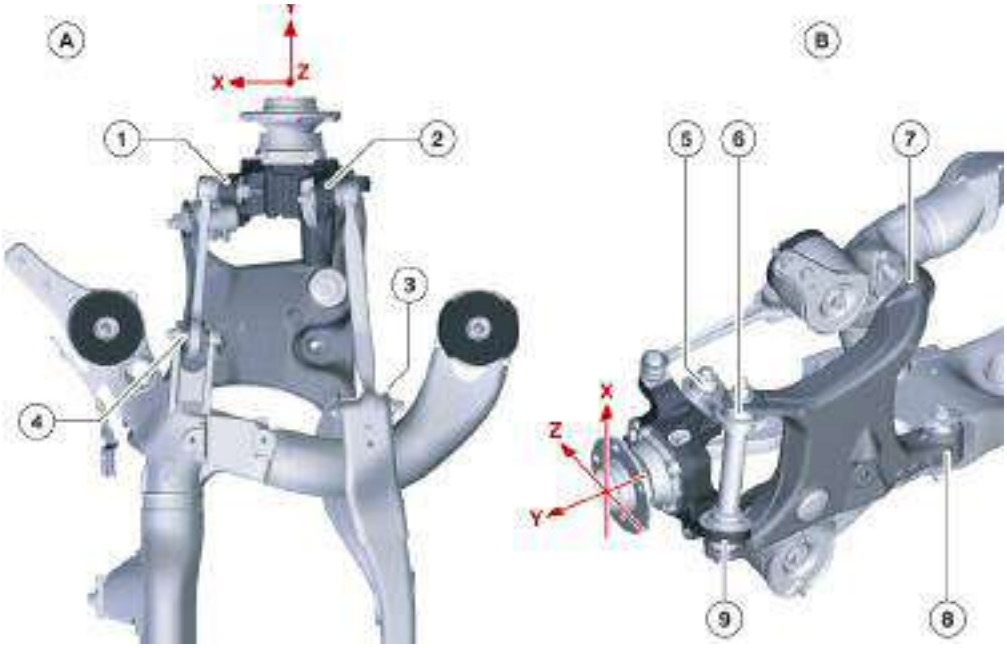

Index	Explanation	Index	Explanation
A	Top view (forward direction x)	5	Rubber mount
B	Bottom side view	6	Rubber mount
1	Angle joint	7	Rubber mount
2	Angle joint	8	Rubber mount
3	Rubber mount	9	Ball joint
4	Rubber mount		

Viewing the arrangement of the arms and links in the Integral IV rear axle of the E65 (above) it is difficult to imagine that defined steering movement of the rear wheels about the Z-Axis could be realized.

cardiagn.com

Theoretically, i.e. kinematically, the design of the Integral IV rear axle could facilitate steering capabilities, however a large actuator would've been required and it would've required additional engineering design. Ultimately it would've also been decisively heavier and more expensive, hence the Integral V rear axle.

Arm Arrangement, Integral V Rear Axle in the F01/F02

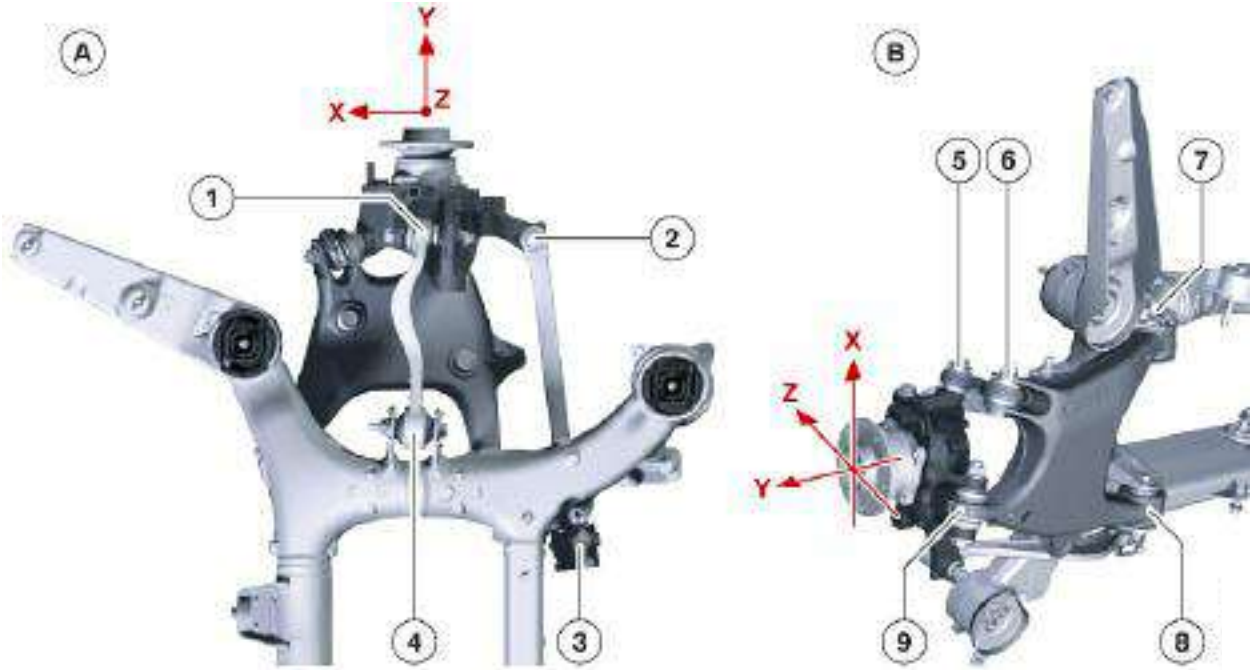

Index	Explanation	Index	Explanation
A	Top view (forward direction X-Axis)	5	Rubber mount
B	Bottom side view	6	Rubber mount
1	Ball joint	7	Rubber mount
2	Ball joint	8	Rubber mount
3	Rubber mount	9	Ball joint
4	Ball joint		

cardiagn.com

Summary of the design layout:

- The system consists of a wheel carrier that is controlled from below by a torsionally rigid A-arm (swinging arm).
- At the bottom, the wheel carrier is connected directly by means of a first bearing mount and indirectly by means of a second bearing mount, in connection with an integral link arranged vertically with respect to the plane of the A-arm (swinging arm), to the wheel carrier.
- The two rubber mounts on the inside of the vehicle are connected to the rear axle carrier such that they are torsionally soft and can be displaced axially.
- The upper transverse control arm lies approximately in the vertical plane of the drive shaft and therefore also at the center point of the wheel.
- The rear track rod arranged approximately at the center point of the wheel is either mounted on the rear axle carrier or connected to the actuator of the integral active steering.

The track and camber at the rear axle can still be adjusted by means of two eccentric screws, however, a new procedure must be observed!

NOTES

cardiagn.com

Suspension Options (Integral V)

The standard chassis and suspension system of the F01 features steel springs on the front and rear axle. The standard chassis and suspension on F02 and F07 has steel springs on the front axle with the single axle air suspension (EHC) fitted on the rear axle. The F01/F02, is equipped as standard with vertical dynamics control featuring electronically.

F07 Rear Axle with Single Axle Air Suspension (EHC).

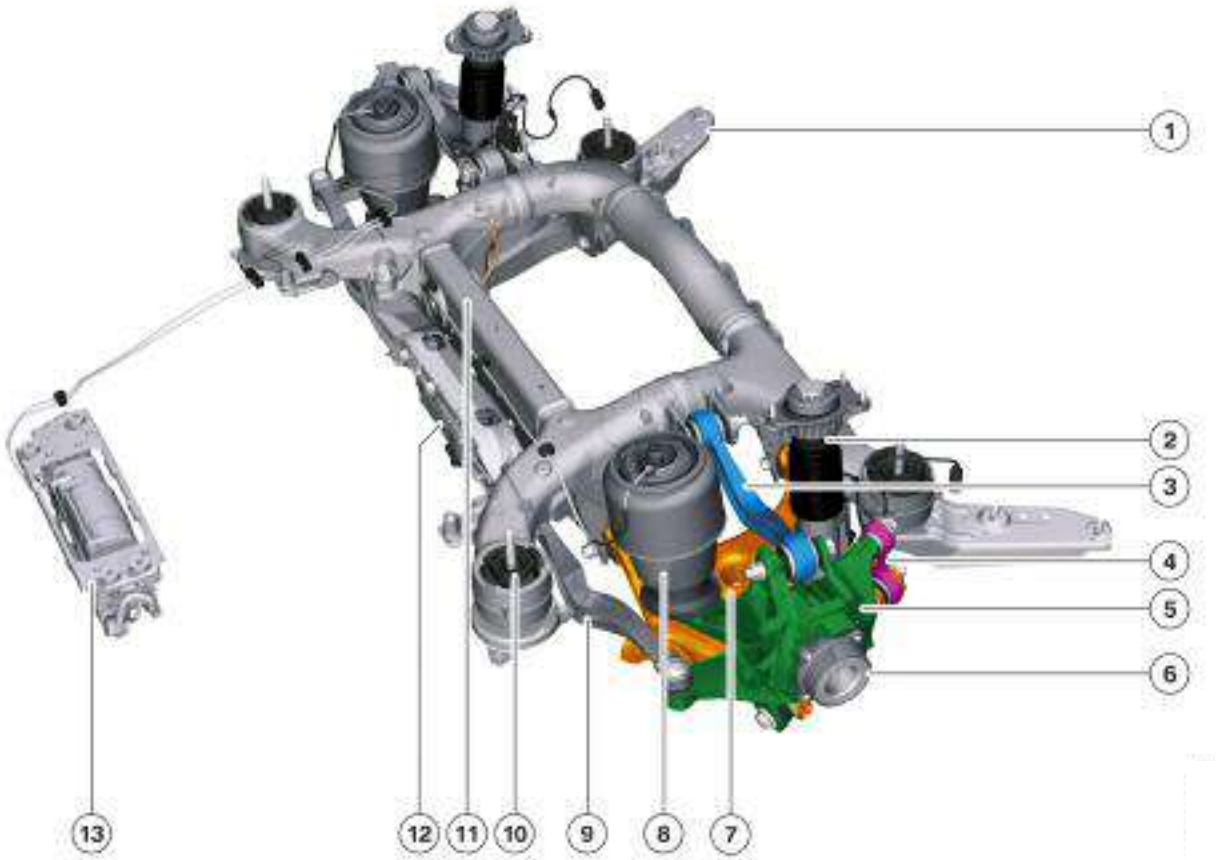

Index	Explanation	Index	Explanation
1	Thrust strut	8	Air spring
2	Shock absorber	9	Track link
3	Upper wishbone	10	Rear axle support mount
4	Integral link	11	Rear axle support
5	Wheel carrier	12	Rear axle slip angle control actuator
6	Wheel bearing	13	Air supply system (LVA)
7	Swinging arm		

cardiagn.com

Depending on the vehicle and optional equipment the following combinations are available:

- Standard suspension with single axle air spring.
- Dynamic drive with steel springs and VDC dampers.
- Dynamic drive with 2 steel springs and single axle air spring and VDC dampers.

Beginning with the F10 however conventional spring struts on the front and rear axles are installed as standard equipment with EDC/VDC dampers available as an option. This configuration is also installed in the F12 and F13 6 Series models.

F10 Rear Axle with Spring Struts.

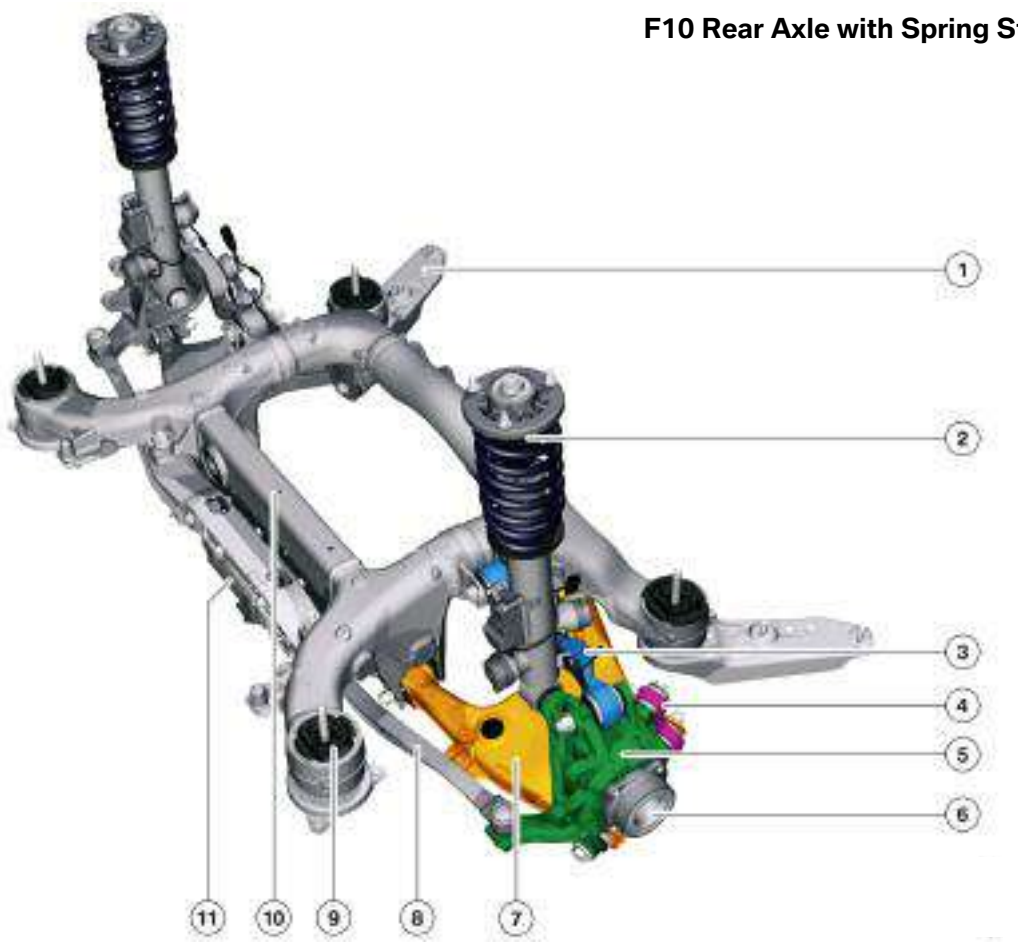

Index	Explanation	Index	Explanation
1	Thrust strut	7	Swinging arm
2	Spring strut	8	Air spring Track link
3	Upper wishbone	9	Rubber mount for rear axle
4	Integral link	10	Rear suspension subframe
5	Wheel carrier	11	HSR actuator
6	Wheel bearing		

cardiagn.com