U240E & U241E Overhaul

APPLICATION

CAUTION: Flush oil cooler and oil cooler lines prior to transaxle installation. Oil cooling system contamination may cause premature transaxle failure.

TRANSAXLE APPLICATION

Application	Transaxle Model
Camry	U241E
Camry Solara	U241E
Celica	U240E
Highlander	U241E
Matrix	U240E
RAV4	U241E
Scion tC	U241E

IDENTIFICATION

TRANSAXLE

Vehicle Identification Number (VIN) is used for correct identification of component parts and assemblies. VIN is located at top left corner of instrument panel. Vehicle certification label is located at left corner of driver's door. See **Fig. 1**. This label also contains the VIN.

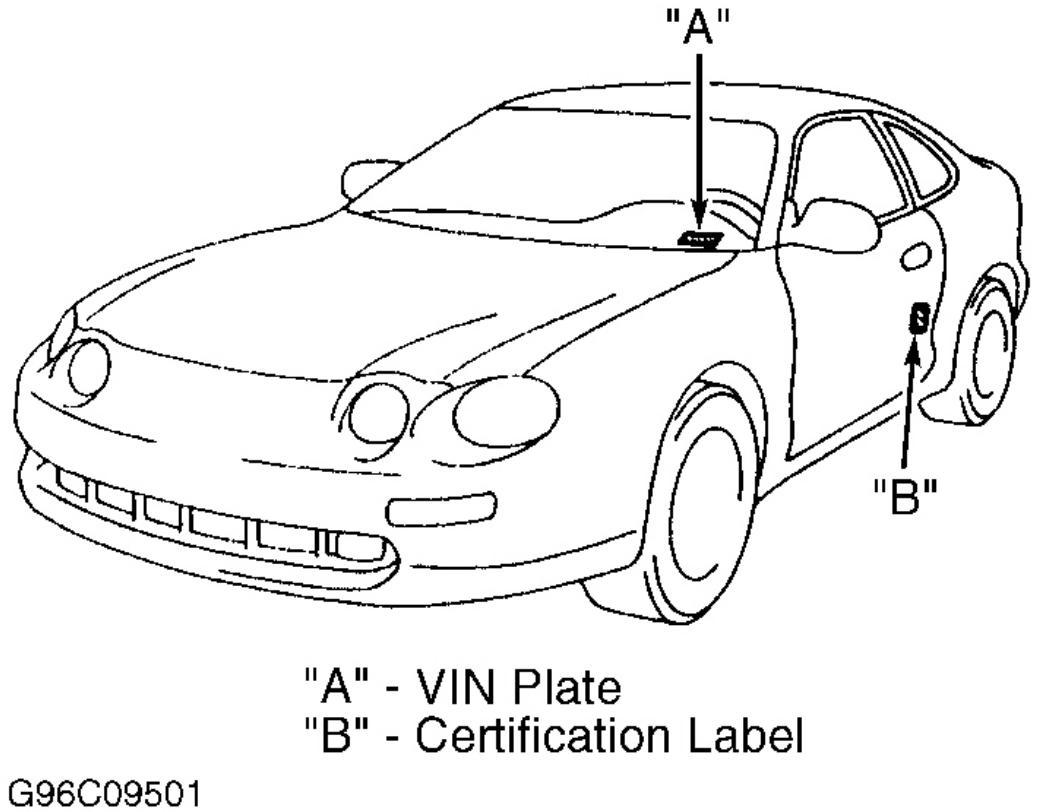

Fig. 1: Locating Vehicle Identification Number Plate & Certification Label (Typical)
Courtesy of TOYOTA MOTOR SALES, U.S.A., INC.

GEAR RATIOS

TRANSAXLE GEAR RATIOS

Gear Range	Gear Ratio
1st	3.943:1
2nd	2.197:1
3rd	1.413:1
OD	1.020:1
Reverse	3.145:1

DESCRIPTION & OPERATION

INTRODUCTION

The U240 series transaxle is a 4-speed electronically controlled transaxle. Transaxle uses a lock-up torque converter, direct clutch, forward clutch, underdrive clutch, underdrive brake, 3 planetary gears, 2nd brake, 2 one-way clutches, 1st/reverse brake, and hydraulic and electronic control systems. See **Fig. 2**.

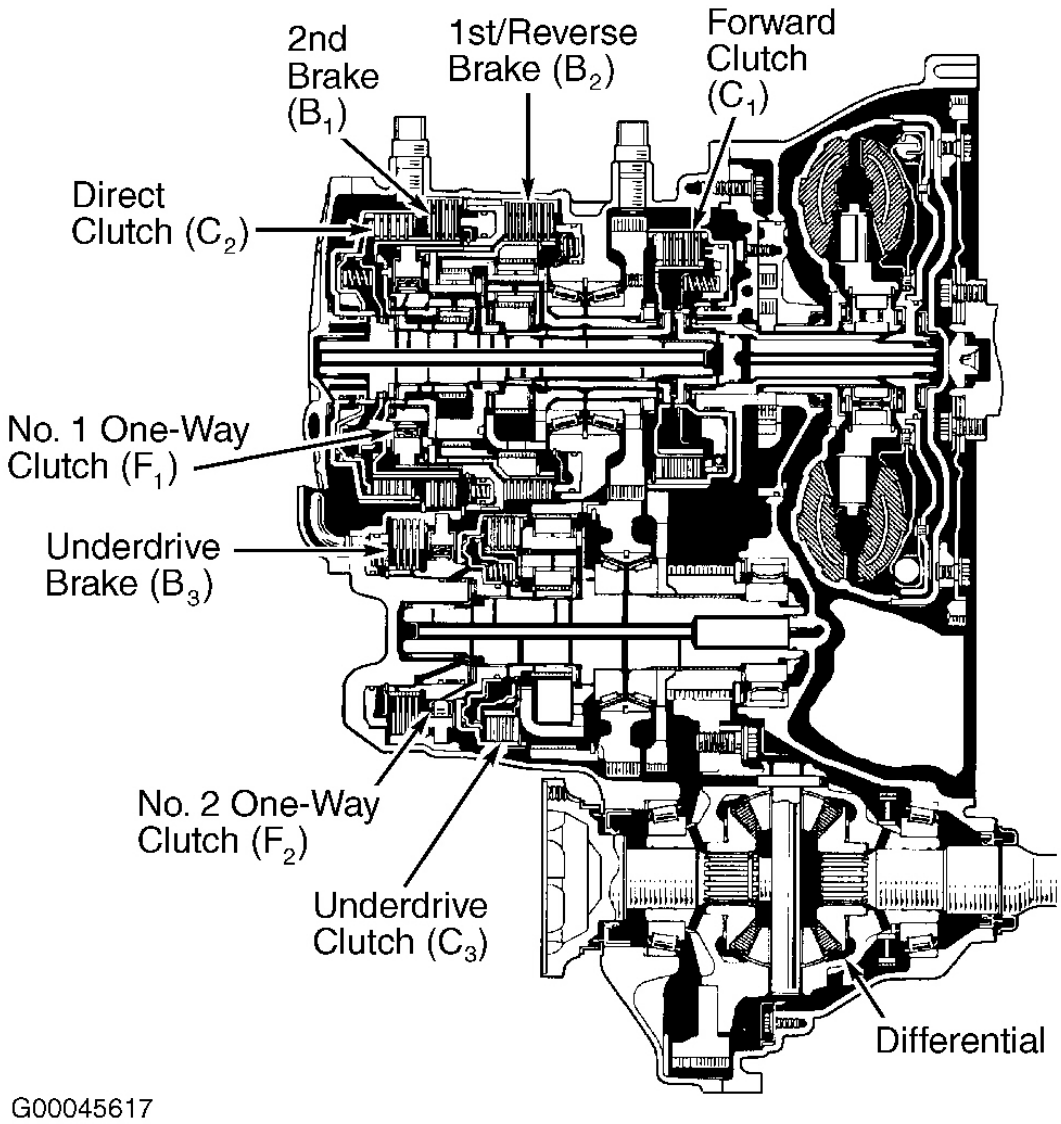

Fig. 2: Identifying Transaxle Component Locations
Courtesy of TOYOTA MOTOR SALES, U.S.A., INC.

LUBRICATION

NOTE: See appropriate SERVICING article.

TROUBLE SHOOTING

NOTE: **Transmission malfunctions may be caused by poor engine performance, improper adjustments, fluid condition or failure of hydraulic, mechanical or electronic components. Ensure all concerns have been properly checked prior to transmission overhaul. See appropriate DIAGNOSIS article.**

COMPONENT TESTS

TORQUE CONVERTER

NOTE: **Torque converter is a sealed unit and is serviced as complete assembly. Perform the following tests to check for defective converter. Torque converter and transaxle cooler must be thoroughly cleaned and flushed if transaxle is contaminated.**

Torque Converter One-Way Clutch Test

1. Insert a turning tool into inner race of one-way clutch. Install Tester (09351-32010) so it fits in notch of converter hub and outer race of one-way clutch.
2. With converter in normal operating position, clutch should lock-up when turned counterclockwise and should rotate freely and smoothly when turned clockwise. See **Fig. 3**. If one-way clutch fails test in either direction, clean converter. Retest clutch. If clutch fails test, replace torque converter.

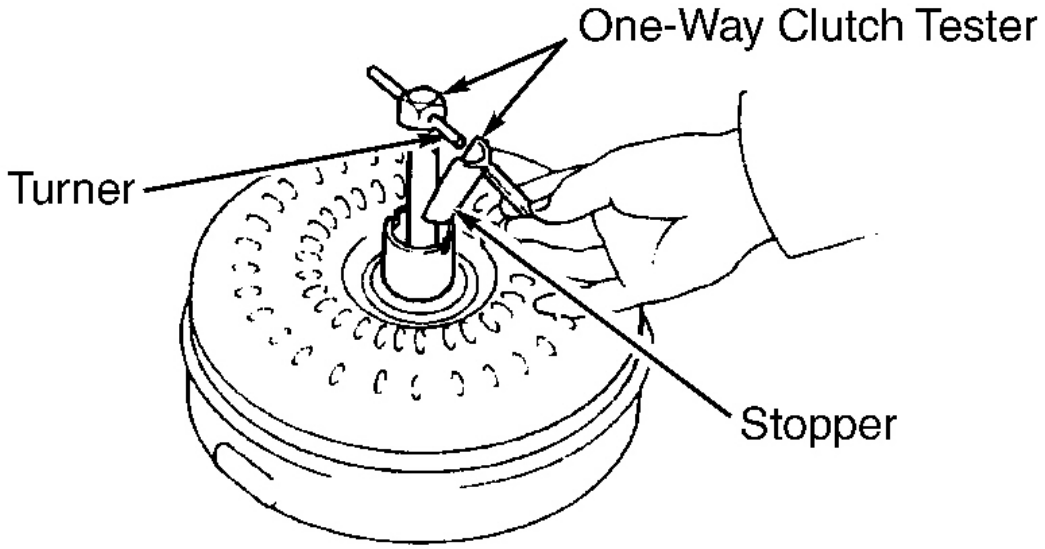

G93I23810

Fig. 3: Checking Torque Converter One-Way Clutch
Courtesy of TOYOTA MOTOR SALES, U.S.A., INC.

Torque Converter Sleeve Runout Test

1. Temporarily mount torque converter to drive plate. Mount a dial indicator with needle resting on converter sleeve. See **Fig. 4**. Rotate converter. If runout exceeds .012" (.30 mm), ensure converter is properly mounted to drive plate.
2. If converter is properly mounted and runout exceeds specification, replace torque converter. Mark position of converter to ensure correct installation. Remove converter from drive plate.

Drive Plate (Flexplate) Runout Test

Measure drive plate runout. See **Fig. 5**. If runout exceeds .008" (.20 mm), or if ring gear is damaged, replace drive plate. If installing a NEW drive plate, note position of spacers. Tighten bolts to 65 ft. lbs. (88 N.m).

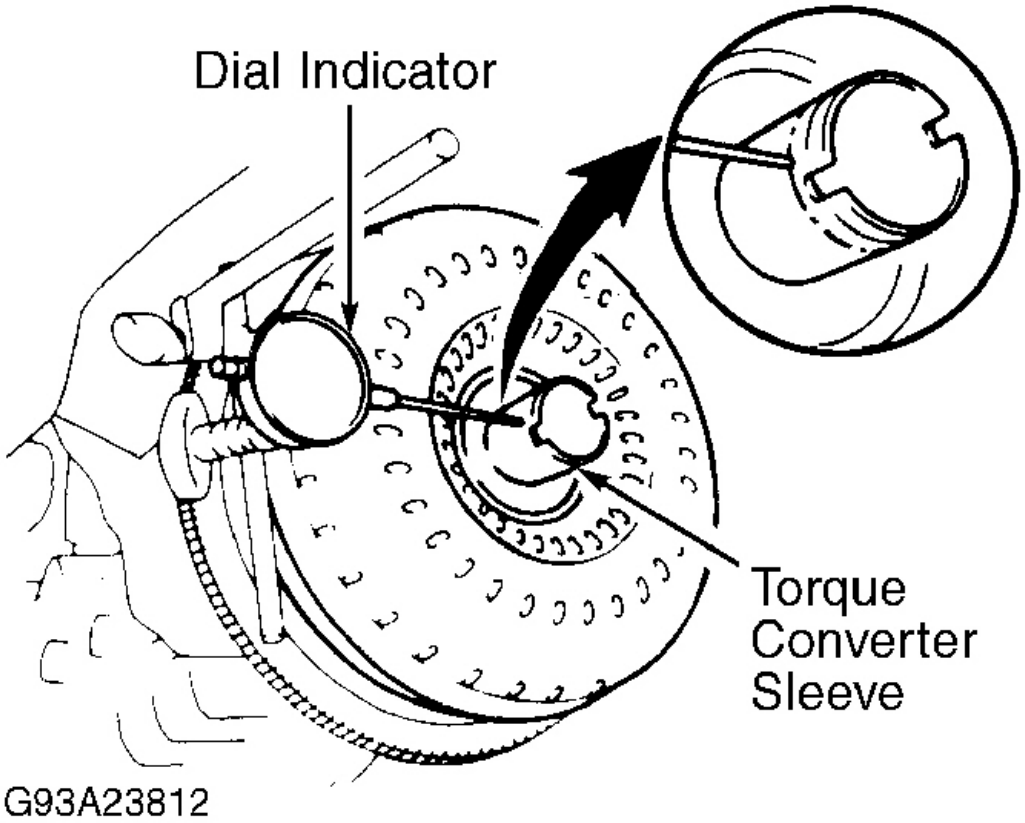

Fig. 4: Checking Torque Converter Sleeve Runout
Courtesy of TOYOTA MOTOR SALES, U.S.A., INC.

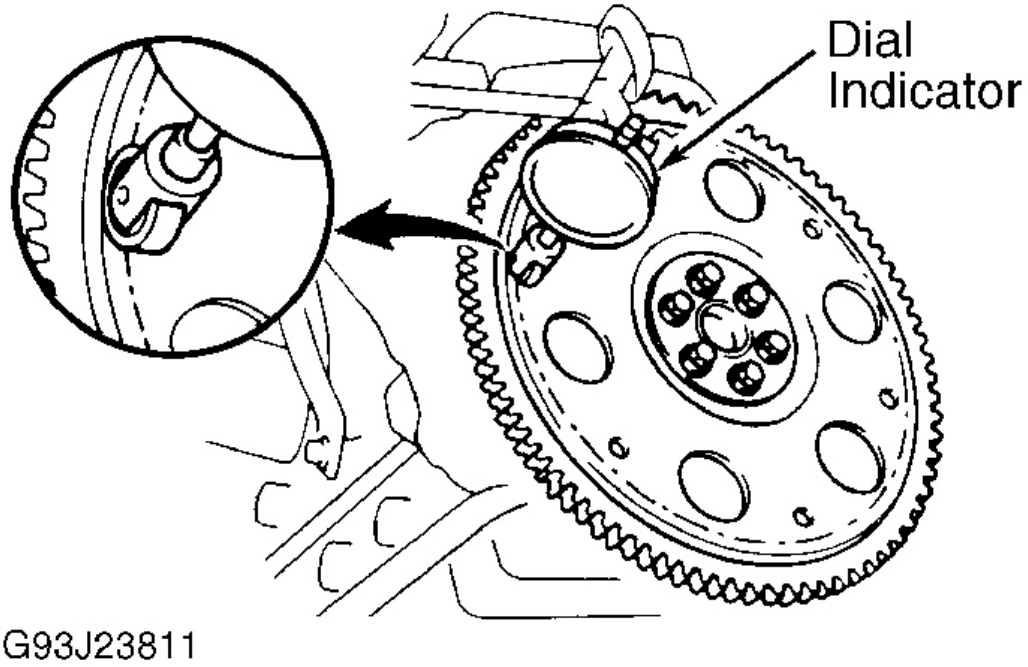

Fig. 5: Checking Drive Plate Runout
Courtesy of TOYOTA MOTOR SALES, U.S.A., INC.

TRANSAXLE DISASSEMBLY

1. Remove nut, washer and control shift lever. Using a screwdriver, unstake lock tab. Remove 2 bolts and nut, and remove park/neutral position switch. See **Fig. 9**.
2. Remove oil line union and elbow. Remove and discard "O" rings from union and elbow (if equipped). Remove input turbine and counter gear speed sensors from top of transaxle. See **Fig. 6**. Remove and discard speed sensor "O" rings. Remove transaxle test plug from transaxle case. See **Fig. 7**. Remove solenoid connector bolt located above park/neutral position switch. DO NOT attempt to remove solenoid connector from transaxle case at this time.
3. Place transaxle on wooden blocks. Remove 18 bolts, oil pan and gasket. Disconnect 5 shift solenoid connectors. Remove bolts, clamps and fluid temperature sensor. See **Fig. 8**. Remove transaxle wiring harness with solenoid connector from transaxle case. Remove oil strainer and gasket. See **Fig. 9**.
4. Remove 17 valve body bolts. Note bolt length and location for reassembly reference. See **Fig. 10**. Remove valve body assembly.
5. Remove 3 apply gaskets, check ball body and spring. See **Fig. 11**. Remove brake drum gasket, located near apply gaskets. See **Fig. 9**. Remove underdrive clutch accumulator spring. Using 57 psi (4 kg/cm_2) of compressed air applied to transaxle case, remove underdrive clutch accumulator piston. See **Fig. 12**. Cover piston with shop towel during removal.

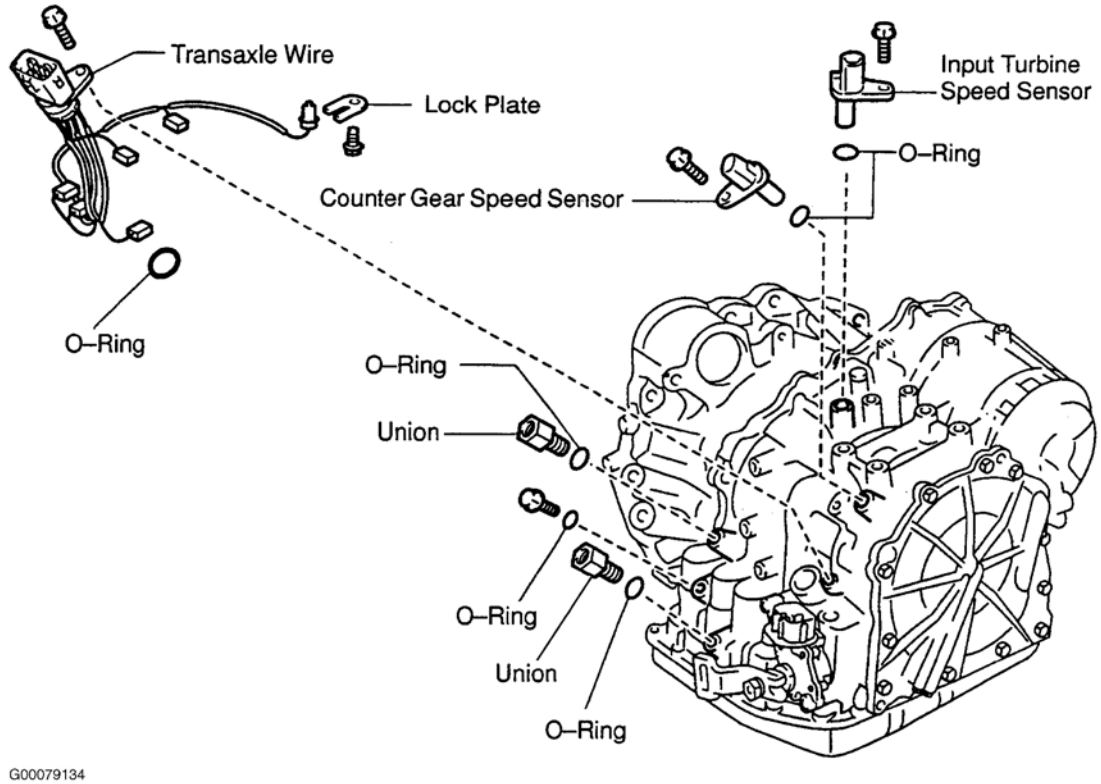

Fig. 6: Identifying Transaxle External Components
Courtesy of TOYOTA MOTOR SALES, U.S.A., INC.

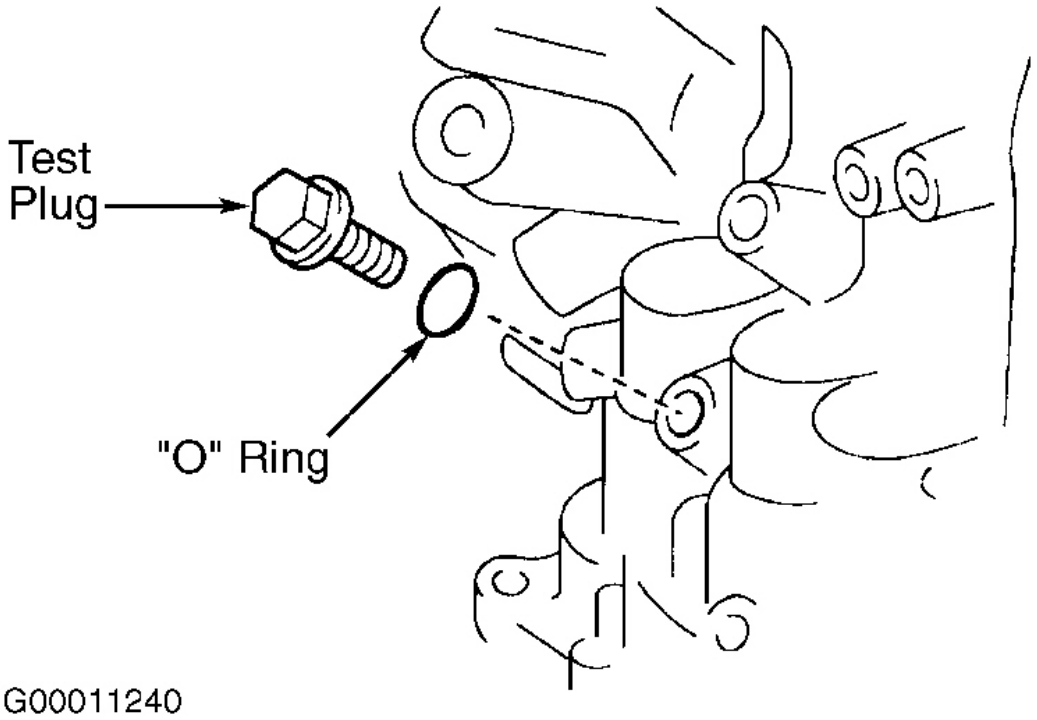

Fig. 7: Locating Transaxle Test Plug
Courtesy of TOYOTA MOTOR SALES, U.S.A., INC.

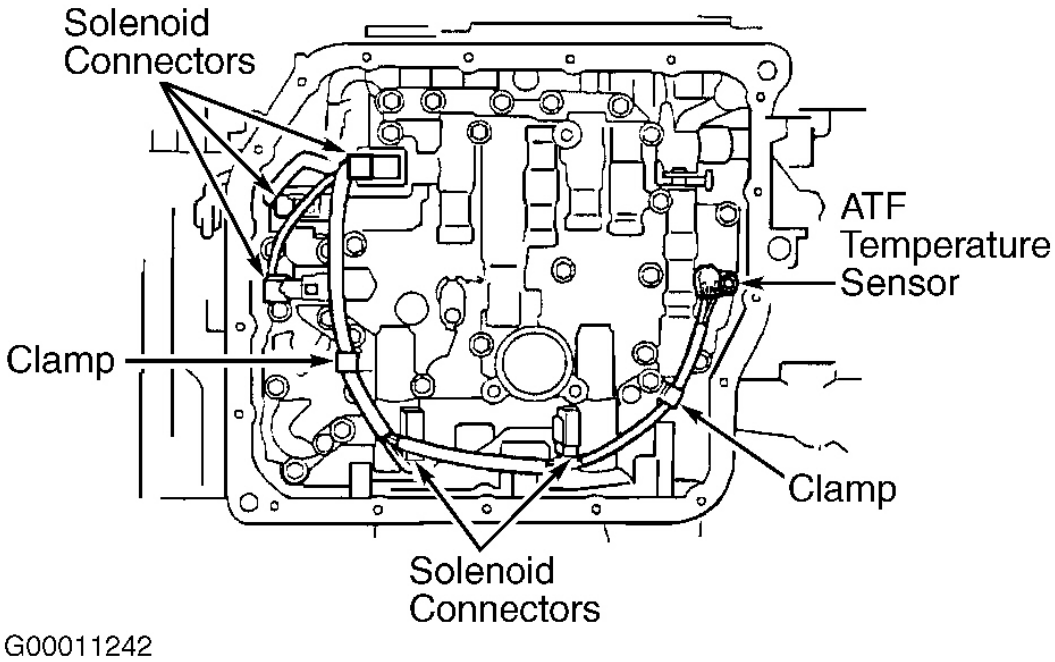

Fig. 8: Locating Fluid Temperature Sensor & Solenoid Connectors
Courtesy of TOYOTA MOTOR SALES, U.S.A., INC.

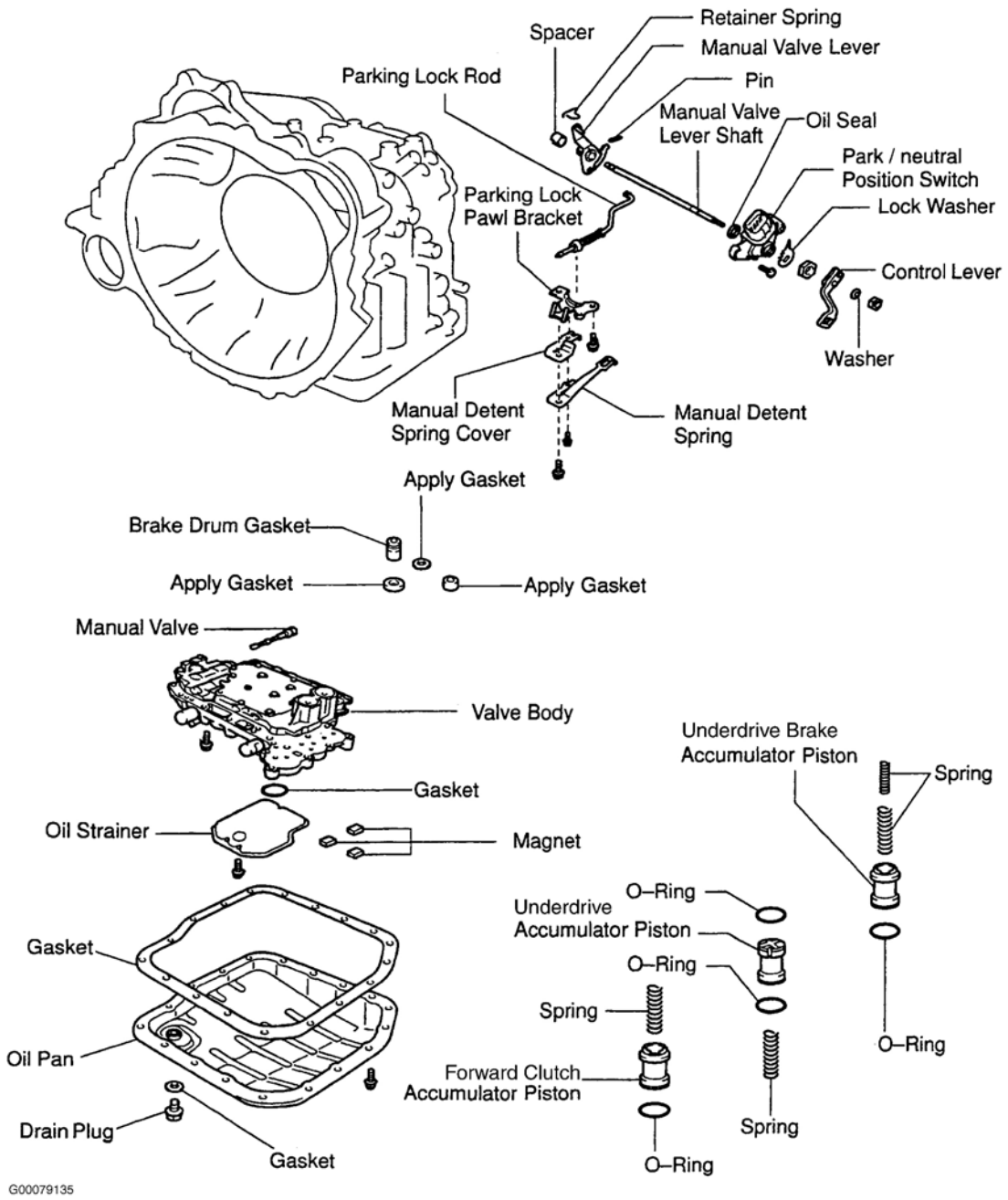

Fig. 9: Exploded View Of Transaxle Valve Body & Parking Lock Components
Courtesy of TOYOTA MOTOR SALES, U.S.A., INC.

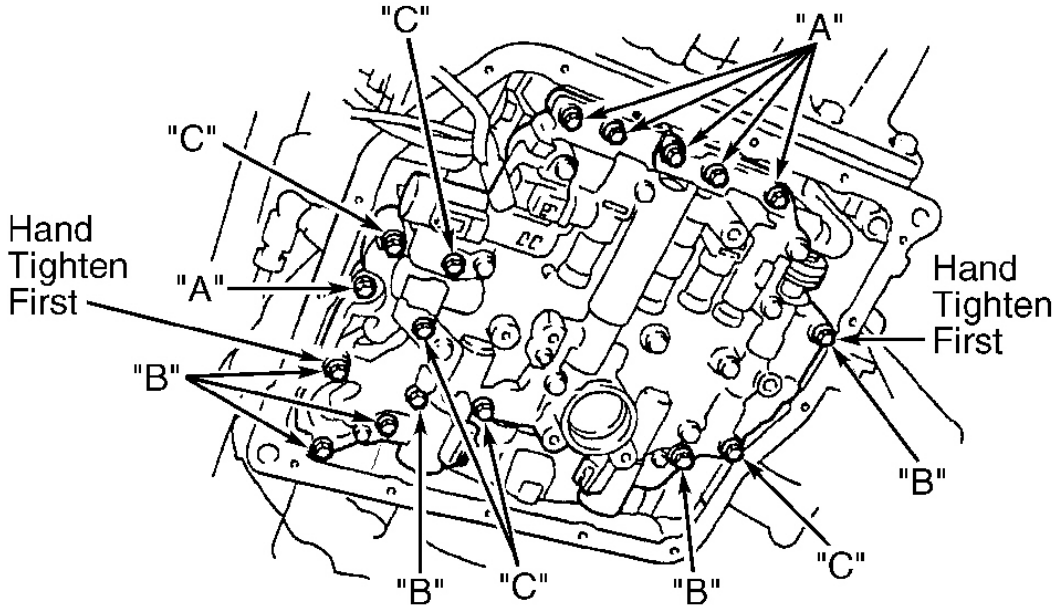

Fig. 10: Identifying Valve Body Bolt Locations
Courtesy of TOYOTA MOTOR SALES, U.S.A., INC.

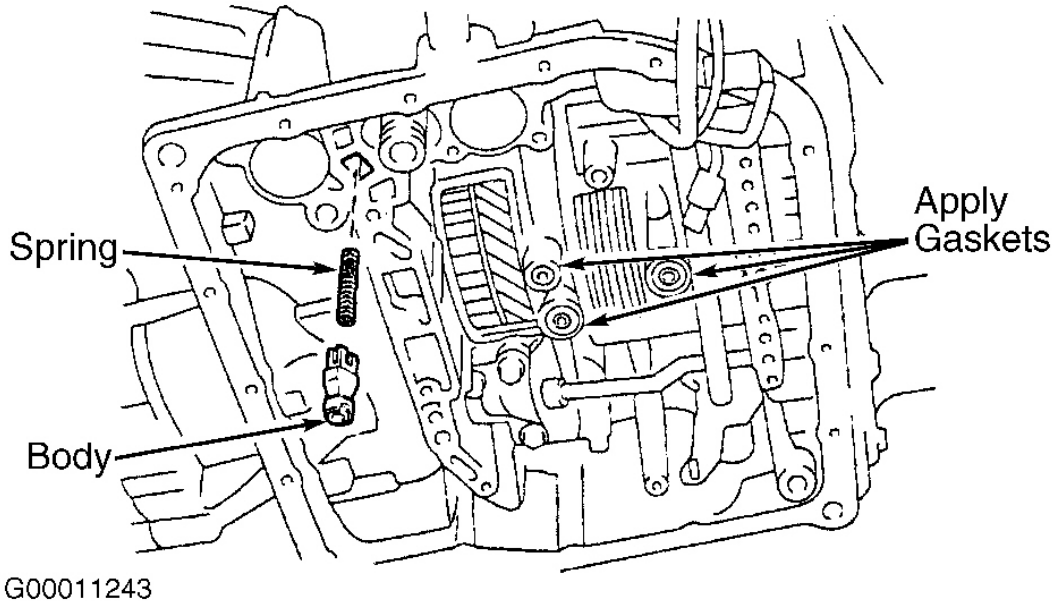

Fig. 11: Locating Check Ball Body & Spring, & Apply Gaskets (3)
Courtesy of TOYOTA MOTOR SALES, U.S.A., INC.

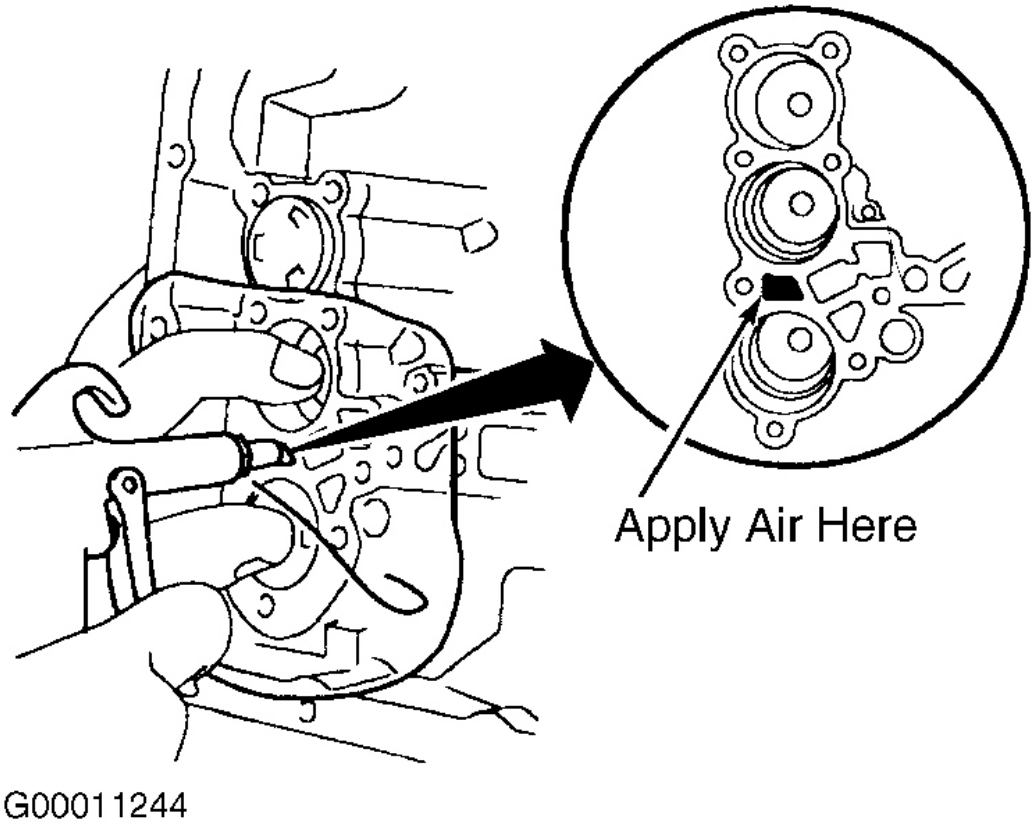

Fig. 12: Removing Underdrive Clutch Accumulator Piston
Courtesy of TOYOTA MOTOR SALES, U.S.A., INC.

6. Using 57 psi (4 kg/cm_2) of compressed air applied to transaxle case, remove forward clutch accumulator piston and spring, and underdrive brake accumulator piston. Cover pistons with shop towel during removal. See **Fig. 13** and **Fig. 14** .
7. Using needle nose pliers, remove manual valve lever retainer spring. Remove 2 bolts, manual detent spring and cover. See **Fig. 9**. Remove 2 bolts and parking lock pawl bracket. Using a hammer and chisel, unstake and remove spacer. Using a pin punch and hammer, drive out roll pin. Ensure pin does not fall into transaxle case.
8. Remove manual valve lever shaft and manual valve lever. Remove parking lock pawl rod from manual valve lever. Using a screwdriver, remove shaft oil seal. See **Fig. 9**. Position transaxle case with oil pump assembly facing upward.

CAUTION: Use caution when removing transaxle housing. Differential assembly may attach to transaxle housing during removal.

9. Using a dial indicator, measure input shaft end play. See **Fig. 15**. End play should be .011-.049" (.27-1.25 mm). Remove 16 transaxle housing bolts. Note bolt length and location during removal for reassembly reference. See **Fig. 16**.

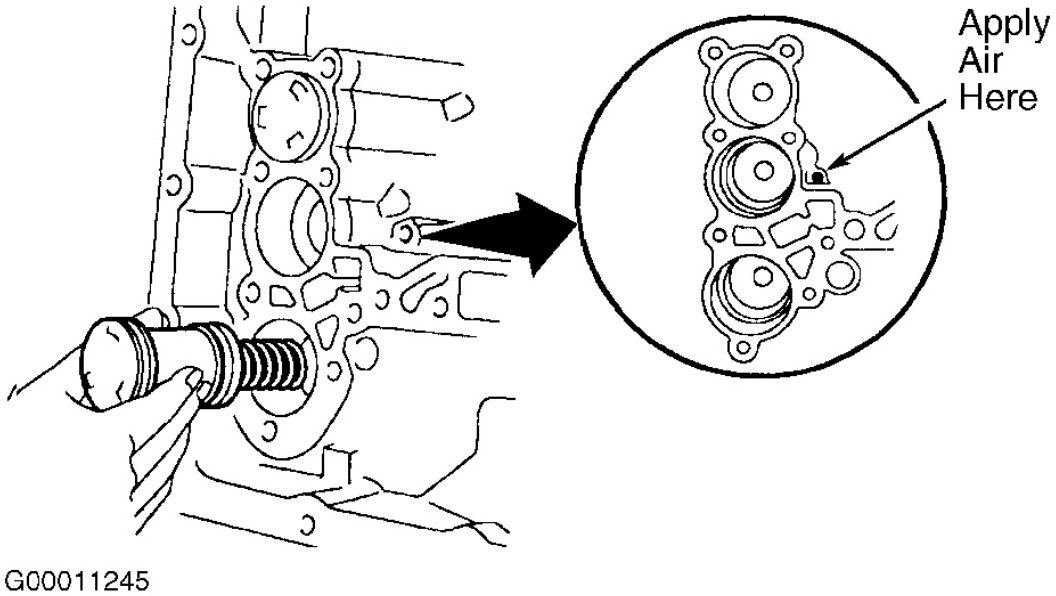

Fig. 13: Removing Forward Clutch Accumulator Piston
Courtesy of TOYOTA MOTOR SALES, U.S.A., INC.

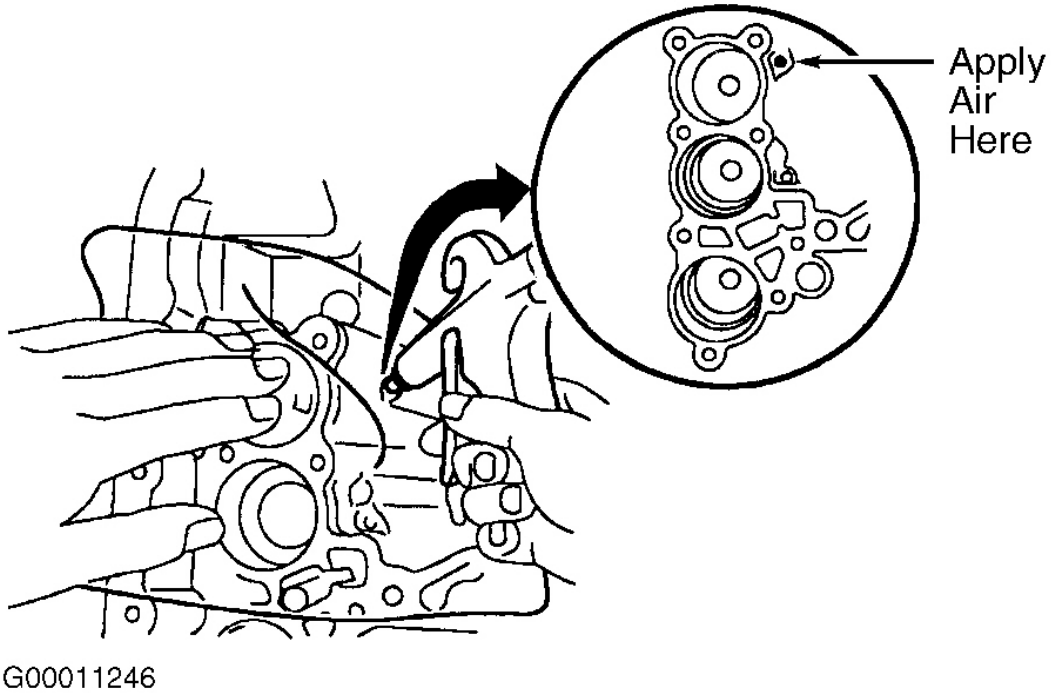

Fig. 14: Removing Underdrive Brake Accumulator Piston
Courtesy of TOYOTA MOTOR SALES, U.S.A., INC.

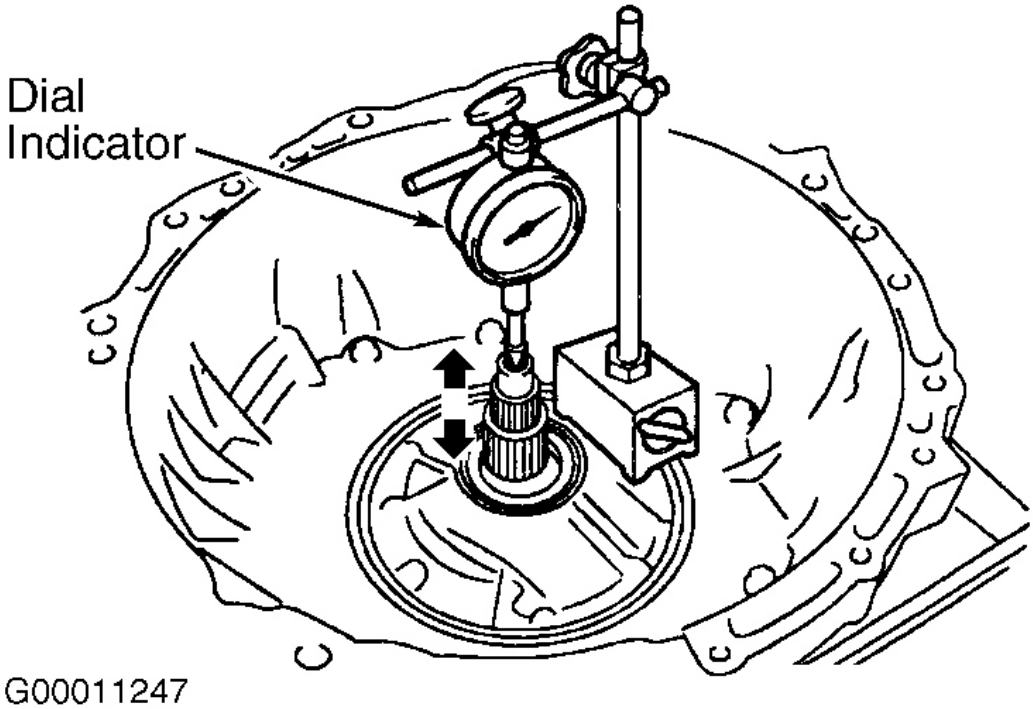

Fig. 15: Measuring Input Shaft End Play
Courtesy of TOYOTA MOTOR SALES, U.S.A., INC.

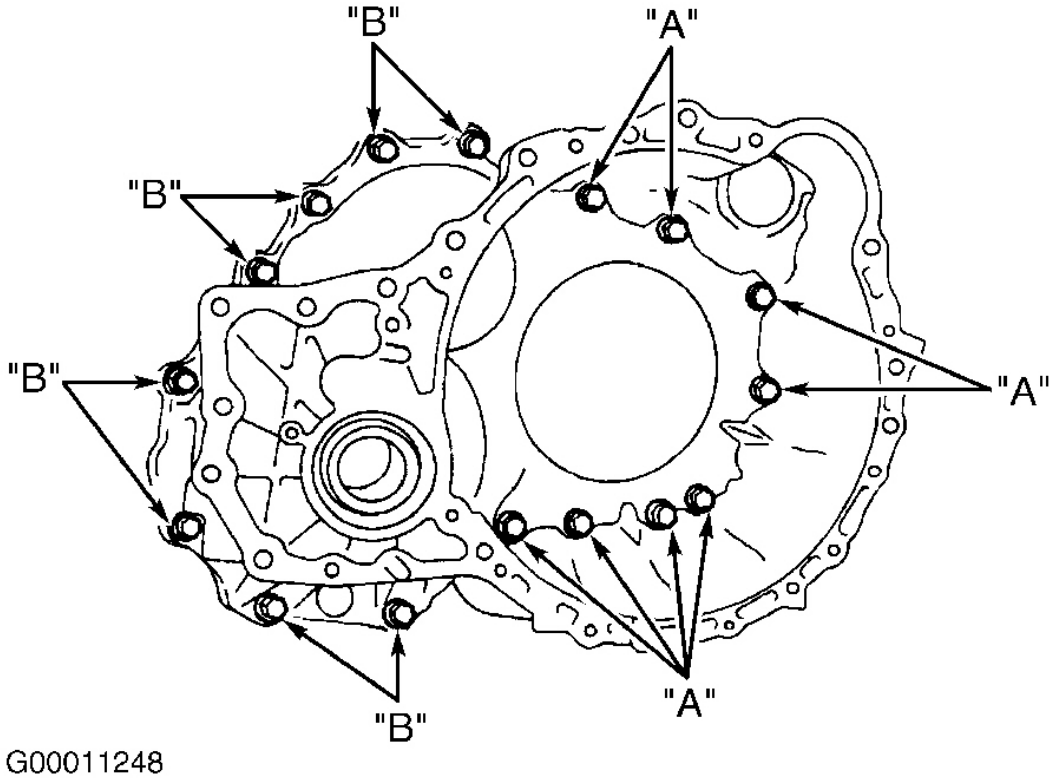

Fig. 16: Removing & Installing Transaxle Housing Bolts
Courtesy of TOYOTA MOTOR SALES, U.S.A., INC.

10. Remove 7 oil pump bolts and oil pump. Remove thrust bearing and bearing race from underdrive planetary gear assembly. See **Fig. 17**. Remove differential assembly. Remove 2 apply gaskets from front of transaxle case. See **Fig. 23**. Remove forward clutch from transaxle case. Remove multiple disc clutch hub and needle roller bearing from transaxle case. See **Fig. 18**.
11. Remove one bolt and parking lock pawl clamp. See **Fig. 17**. Remove parking lock pawl shaft. Push parking lock pawl toward transaxle case to prevent interference during underdrive planetary gear assembly removal. See **Fig. 24**. Using both hands, remove underdrive planetary gear assembly. DO NOT allow planetary gear assembly to separate.

NOTE: No. 2 one-way clutch may also be known as underdrive one-way clutch.

12. Remove spring, pawl pin and parking lock pawl. Remove underdrive clutch assembly. See **Fig. 18**. Remove thrust bearing and bearing race. Using a screwdriver, remove No. 2 one-way clutch snap ring. Remove No. 2 one-way clutch from transaxle case. Note position of index marks on No. 2 one-way clutch for reassembly reference. See **Fig. 73**. Note position of outer race retainer on No. 2 one-way clutch for reassembly reference. See **Fig. 25**. Remove outer race retainer from No. 2 one-way clutch.
13. Using a screwdriver, remove underdrive brake snap ring. Remove flange, 3 discs and 3 plates from

transaxle case. Note location of components during removal for reassembly reference. Using appropriate press, compress underdrive brake piston return spring. Using snap ring expander, remove snap ring from underdrive brake. Remove piston return spring. See **Fig. 18**.

14. Remove 11 bolts and transaxle rear cover. If necessary, tap on circumference of rear cover with plastic hammer to remove cover. Remove 2 oil seal rings from rear cover. Using appropriate puller, remove needle roller bearing, if necessary. See **Fig. 20**. Remove bolt, clamp and 2 brake apply pipes. Using a screwdriver, remove 2 apply gaskets from rear of transaxle case. See **Fig. 17**.
15. Remove direct clutch with thrust bearing from back of transaxle case. Remove bearing race from direct clutch (shaft side). Remove rear planetary sun gear assembly from transaxle case. Remove thrust bearing from rear planetary sun gear. Remove thrust washer No. 1 from rear planetary sun gear.
16. Remove No. 1 one-way clutch and thrust bearing from transaxle case. Remove inner race from one-way clutch. Remove one-way clutch outer sleeve from transaxle case. Note direction of components for reassembly reference. Using a screwdriver, remove 2nd brake snap ring. Remove flange, 4 discs and 4 plates (3 discs and 3 plates on U241E) from transaxle case. Note location of components during removal for reassembly reference. See **Fig. 19**.
17. Using a screwdriver, remove 2nd brake cylinder assembly snap ring. Remove 2nd brake cylinder from transaxle. See **Fig. 19**.
18. Using appropriate press, position press on piston return springs and compress springs. Using a screwdriver, remove snap ring. Remove press and piston return springs. See **Fig. 21**. While holding 2nd brake piston, apply 57 psi (4 kg/cm_2) of compressed air to 2nd brake cylinder to remove piston. See **Fig. 22**. Remove 2 "O" rings from piston.
19. Using vernier calipers, measure 2nd brake piston return spring free length with spring mounted to spring seat. Free length should be .654" (16.61 mm). Replace springs as necessary. Coat NEW "O" rings with ATF and install on piston.
20. Remove 1st/reverse brake flange, 5 discs and 5 plates from transaxle case. Note location of components during removal for reassembly reference.

NOTE: Front planetary sun gear may also be known as input sun gear.

21. Using a screwdriver, remove rear planetary gear snap ring. Remove rear planetary gear from transaxle case. Remove thrust washer No. 2 from rear planetary gear. Remove 2 bearing races, thrust bearings and front planetary sun gear from transaxle case. See **Fig. 20**.
22. Using a hammer and chisel, unstake washer located on counter drive gear. See **Fig. 18**. Ensure all claws on washer are pushed down to allow socket to fit securely on nut. Using holding tool and socket, remove nut. See **Fig. 26**. Using appropriate adapter and press, remove front planetary gear from counter drive gear. See **Fig. 27**.
23. Using a screwdriver, remove snap ring and front planetary ring gear from brake hub.

NOTE: In the following step, do not compress piston return spring cover more than .079" (2.00 mm) past snap ring groove. This prevents piston from becoming deformed. DO NOT expand snap ring excessively.

24. Using appropriate press, compress 1st/reverse brake piston return spring. Using snap ring expander, remove snap ring from underdrive brake. Remove piston return spring. Using 57 psi (4 kg/cm_2) of

compressed air applied to transaxle case, remove 1st/reverse brake piston from case. See **Fig. 28**. Cover piston with shop towel during removal.

25. Using appropriate adapter and press, remove counter drive gear from transaxle case. Install and tighten 2 bolts opposite each other evenly on counter drive gear. Ensure clearance between counter drive gear and bearing race is about .79" (20.0 mm). Using bearing puller, remove rear tapered roller bearing from counter drive gear.
26. Using a brass drift and hammer, remove bearing inner and outer races. Remove snap ring at underdrive brake piston from transaxle case. Using 57 psi (4 kg/cm_2) of compressed air applied to transaxle case, remove underdrive brake piston from case. See **Fig. 29**. Cover piston with shop towel during removal.
27. Using appropriate puller, remove needle roller bearing from transaxle case. Remove 2 oil seal rings from transaxle case. See **Fig. 18**. Using appropriate puller, remove cylindrical roller bearing from transaxle case.
28. Remove oil seal ring from transaxle housing. See **Fig. 30**. Remove bolt, clamp and apply pipe from transaxle case. Remove 3 bolts and oil deflector from transaxle case (U240E).

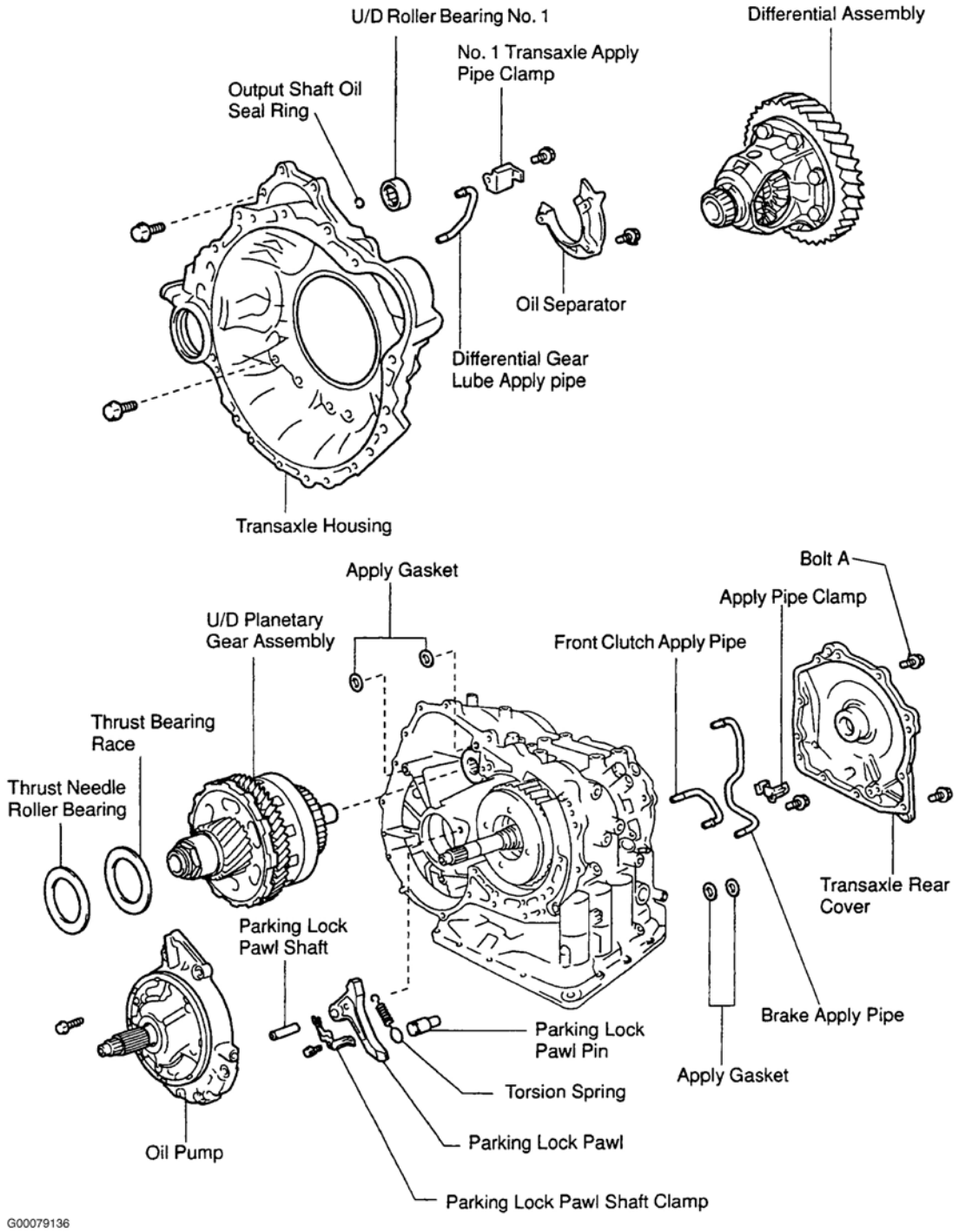

Fig. 17: Exploded View Of Transaxle Internal Components (1 Of 4)
Courtesy of TOYOTA MOTOR SALES, U.S.A., INC.

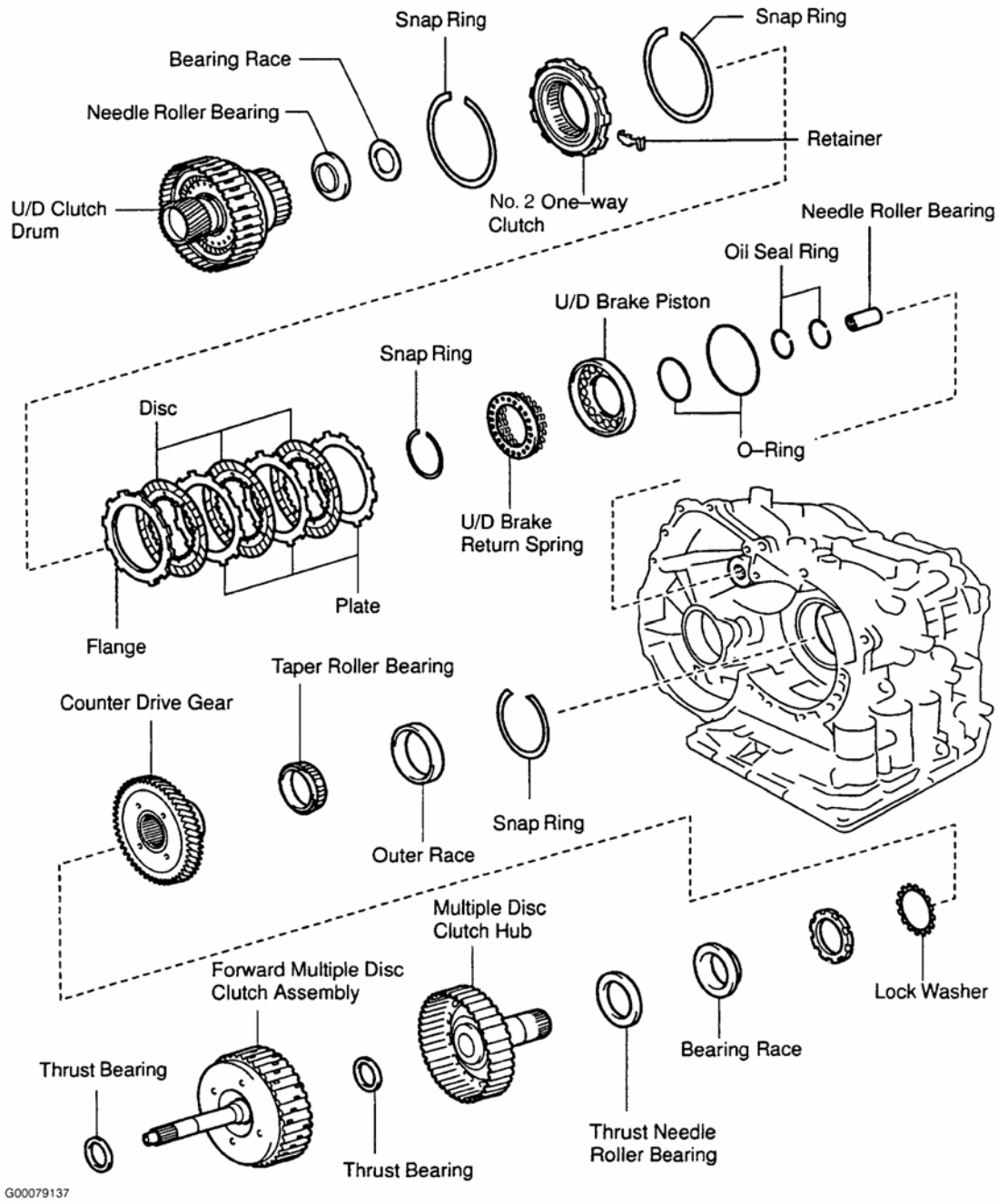

Fig. 18: Exploded View Of Transaxle Internal Components (2 Of 4)
Courtesy of TOYOTA MOTOR SALES, U.S.A., INC.

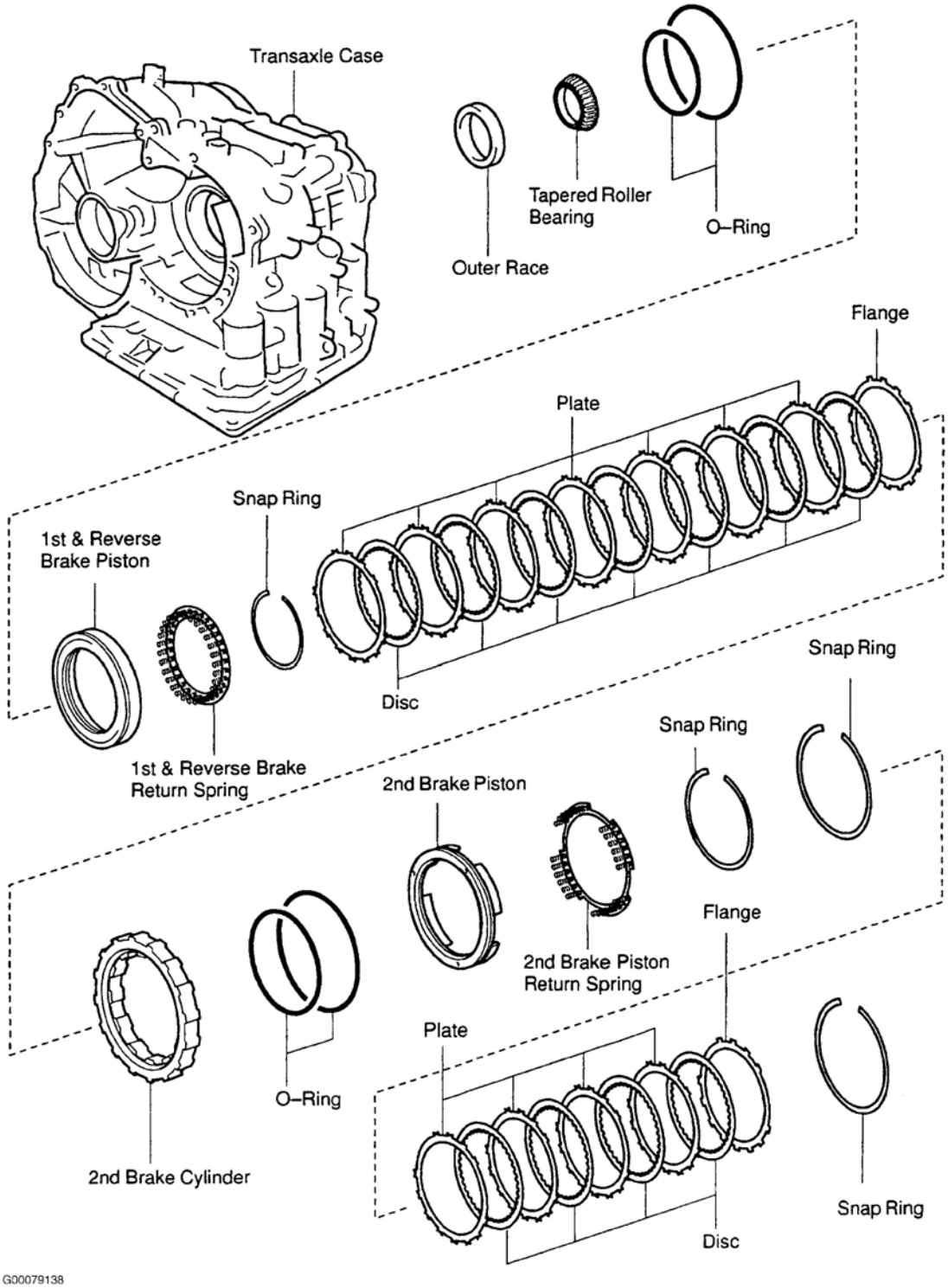

Fig. 19: Exploded View Of Transaxle Internal Components (3 Of 4)
Courtesy of TOYOTA MOTOR SALES, U.S.A., INC.

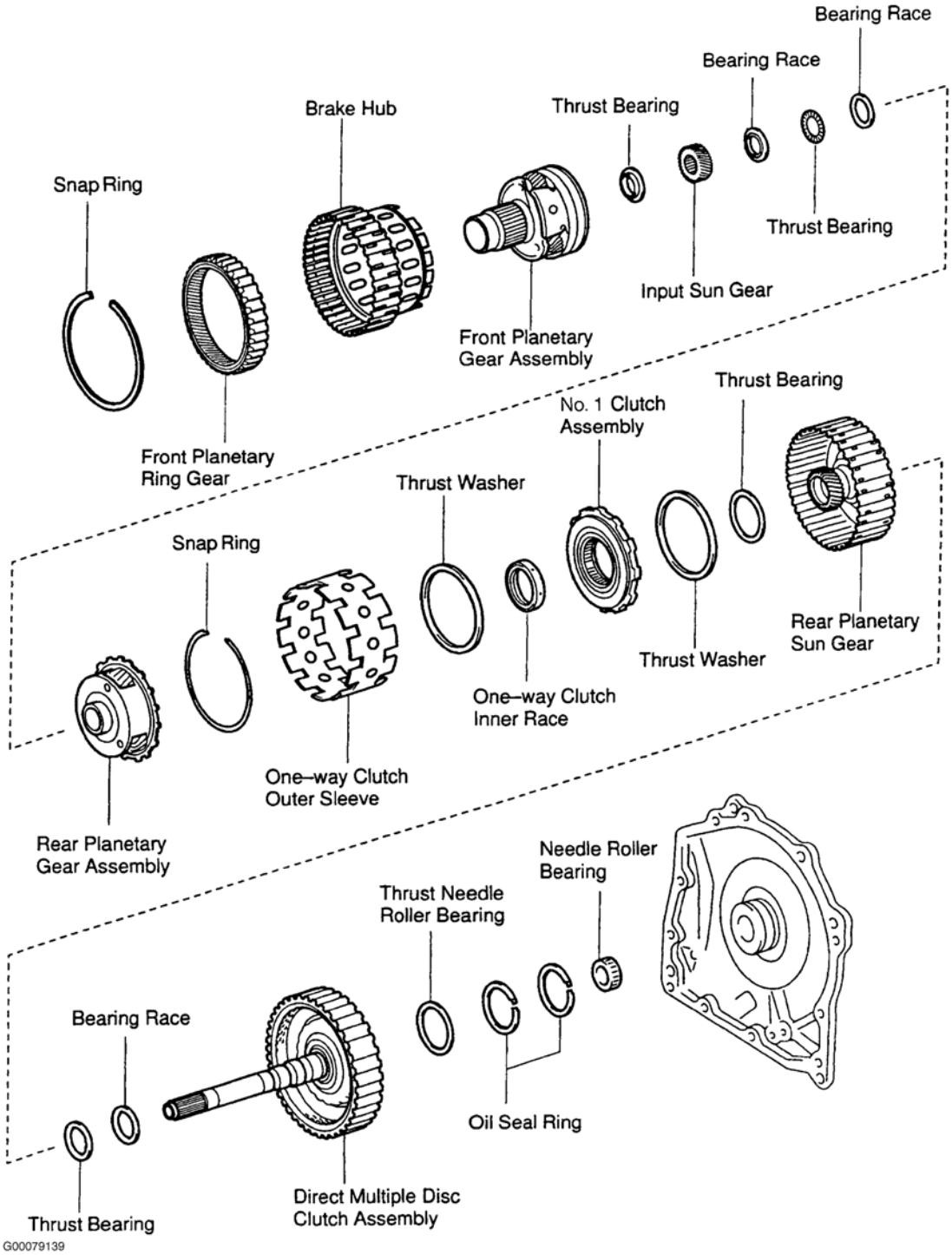

Fig. 20: Exploded View Of Transaxle Internal Components (4 Of 4)
Courtesy of TOYOTA MOTOR SALES, U.S.A., INC.

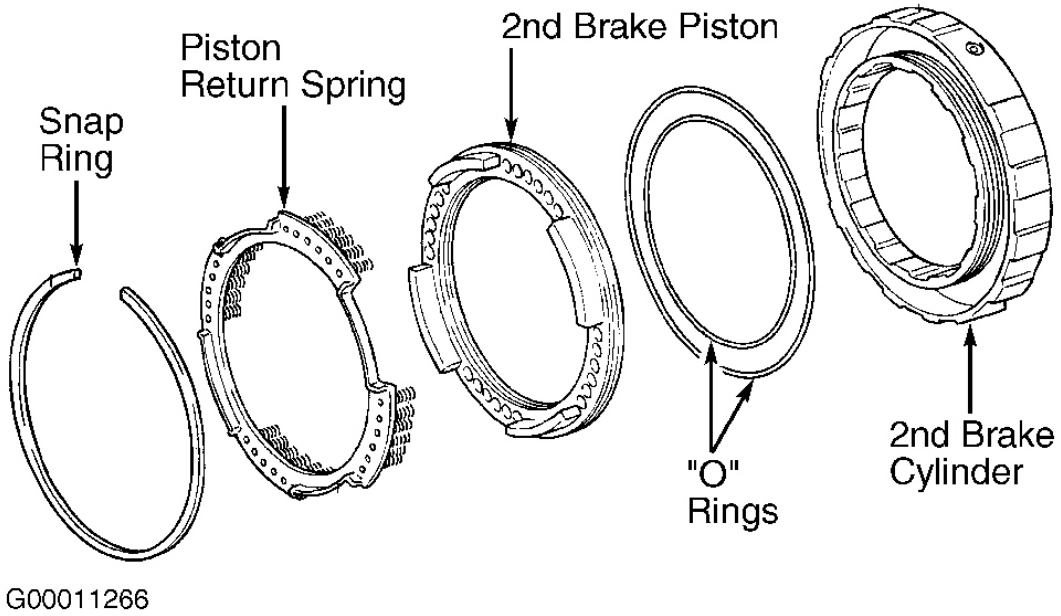

Fig. 21: Exploded View Of 2nd Brake Assembly
Courtesy of TOYOTA MOTOR SALES, U.S.A., INC.

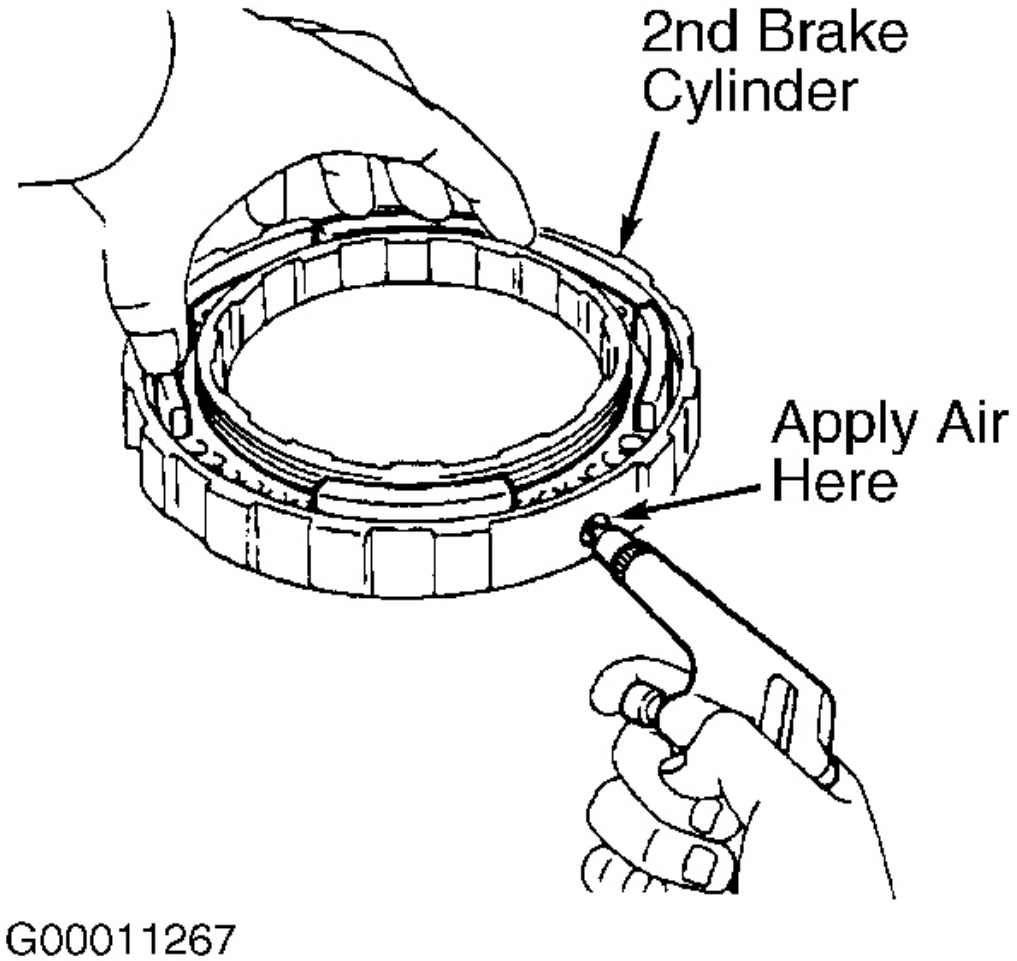

Fig. 22: Removing 2nd Brake Piston
Courtesy of TOYOTA MOTOR SALES, U.S.A., INC.

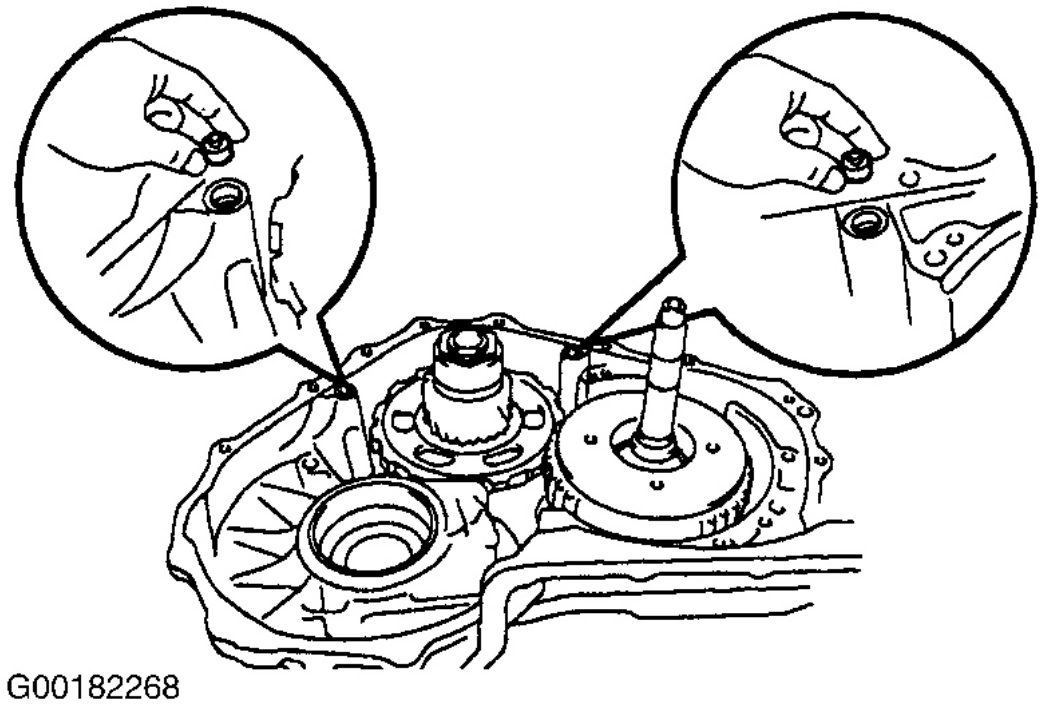

Fig. 23: Locating Transaxle Case Apply Gaskets
Courtesy of TOYOTA MOTOR SALES, U.S.A., INC.

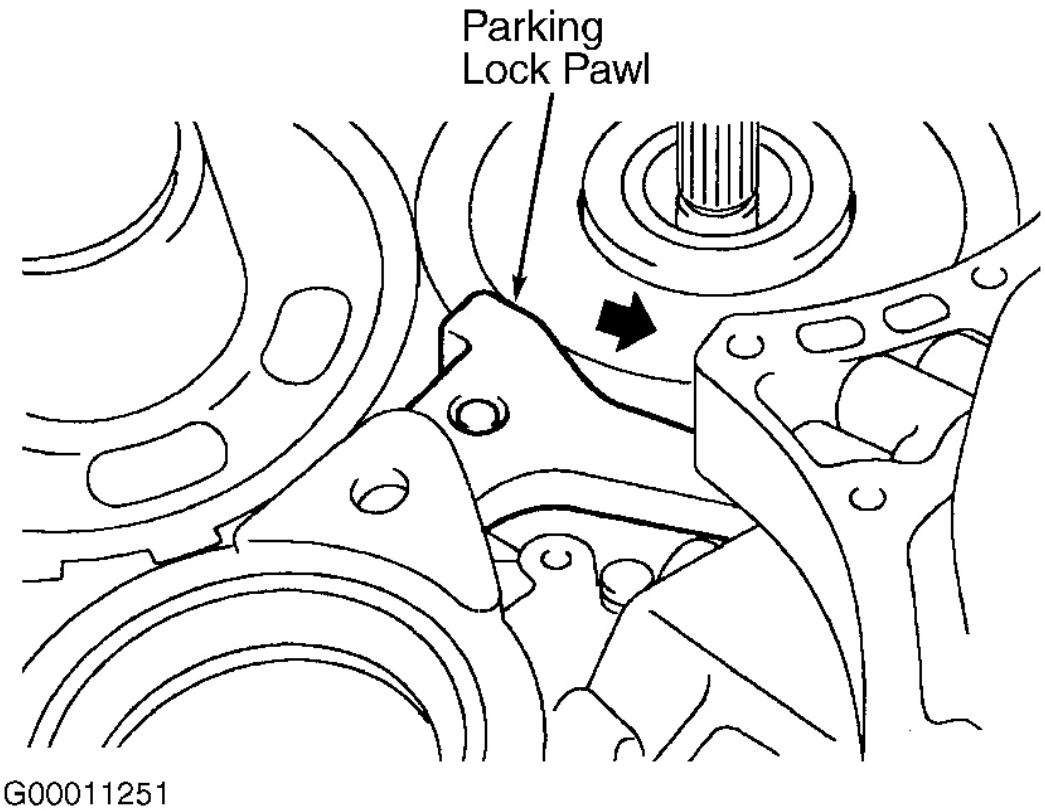

Fig. 24: Pushing Parking Lock Pawl Toward Case
Courtesy of TOYOTA MOTOR SALES, U.S.A., INC.

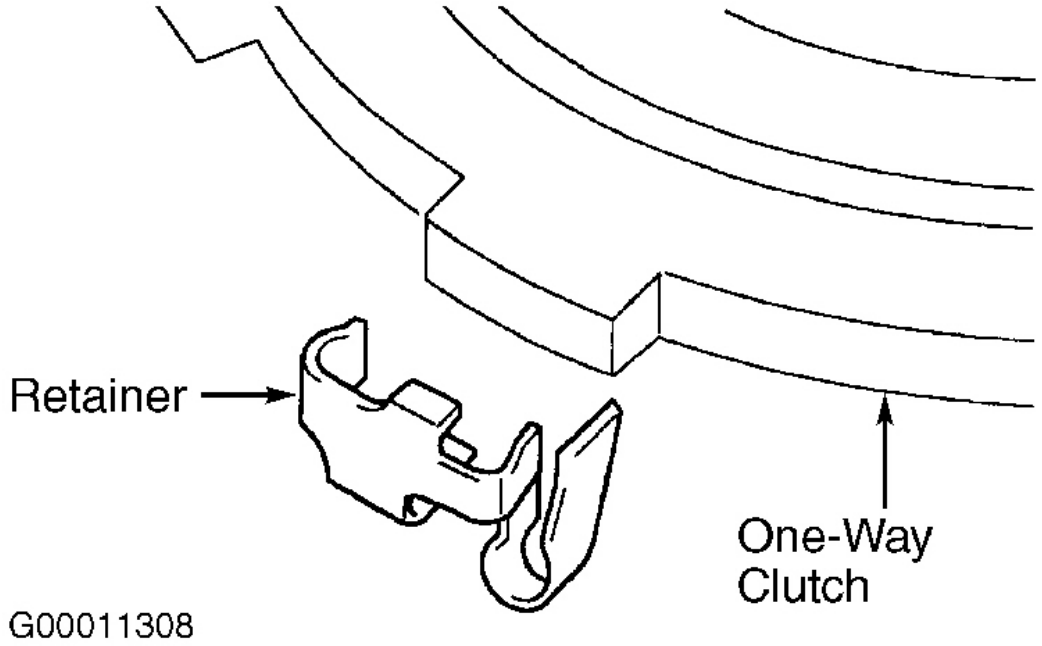

Fig. 25: Removing & Installing Outer Race Retainer
Courtesy of TOYOTA MOTOR SALES, U.S.A., INC.

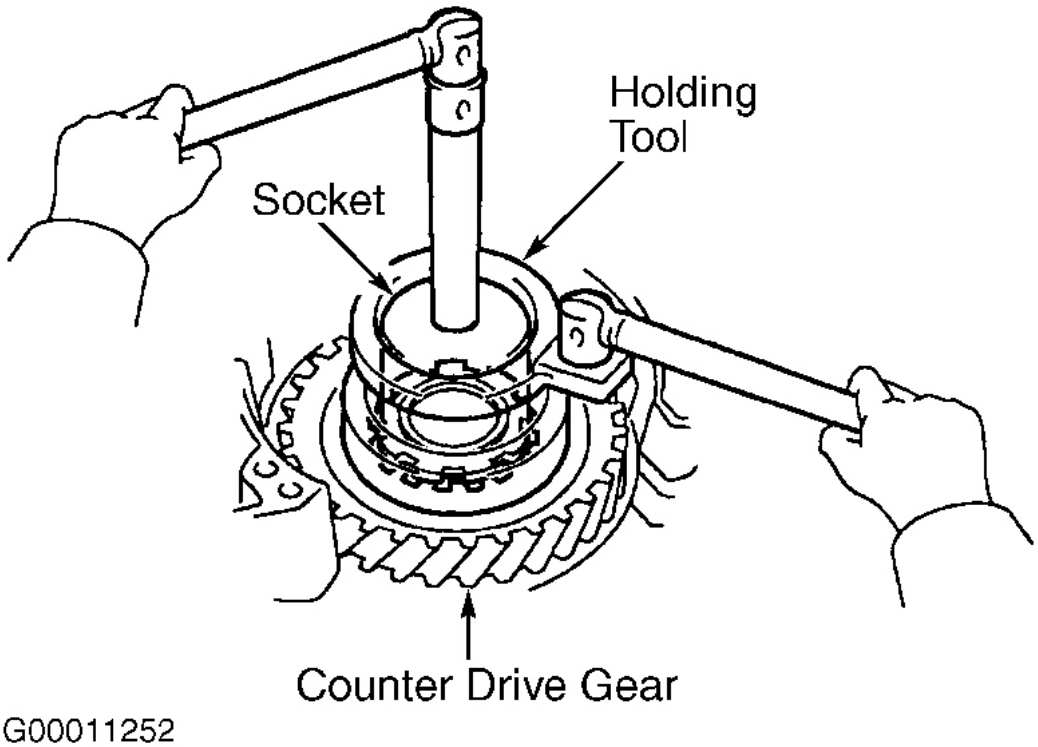

Fig. 26: Removing & Installing Counter Drive Gear Nut
Courtesy of TOYOTA MOTOR SALES, U.S.A., INC.

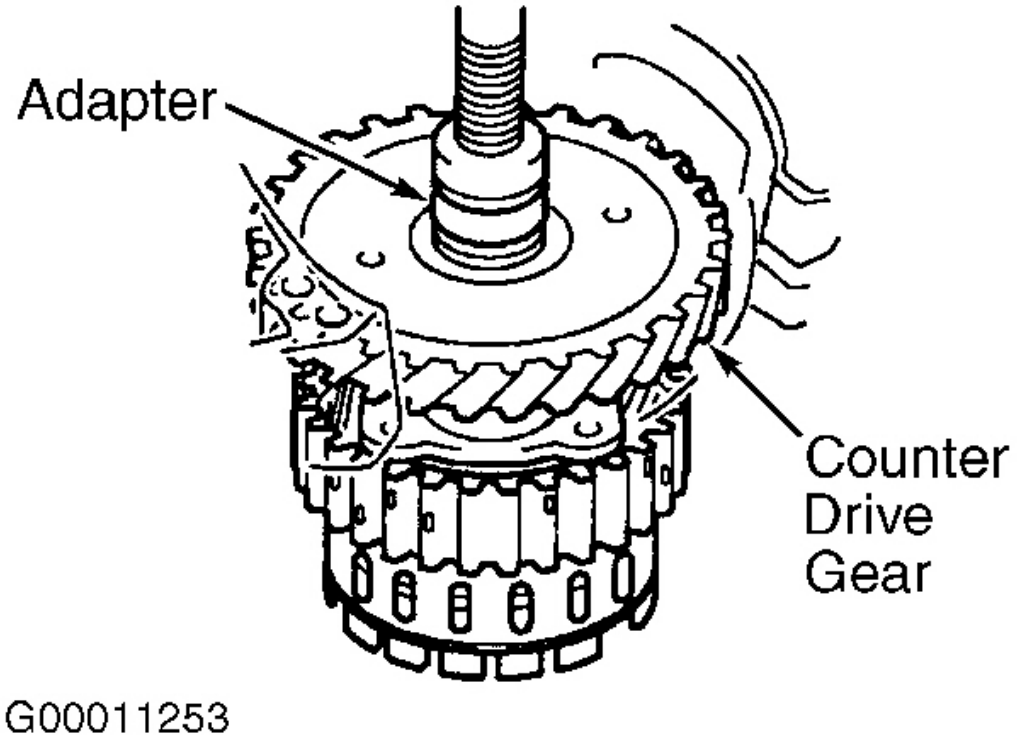

Fig. 27: Removing Front Planetary Gear From Counter Drive Gear
Courtesy of TOYOTA MOTOR SALES, U.S.A., INC.

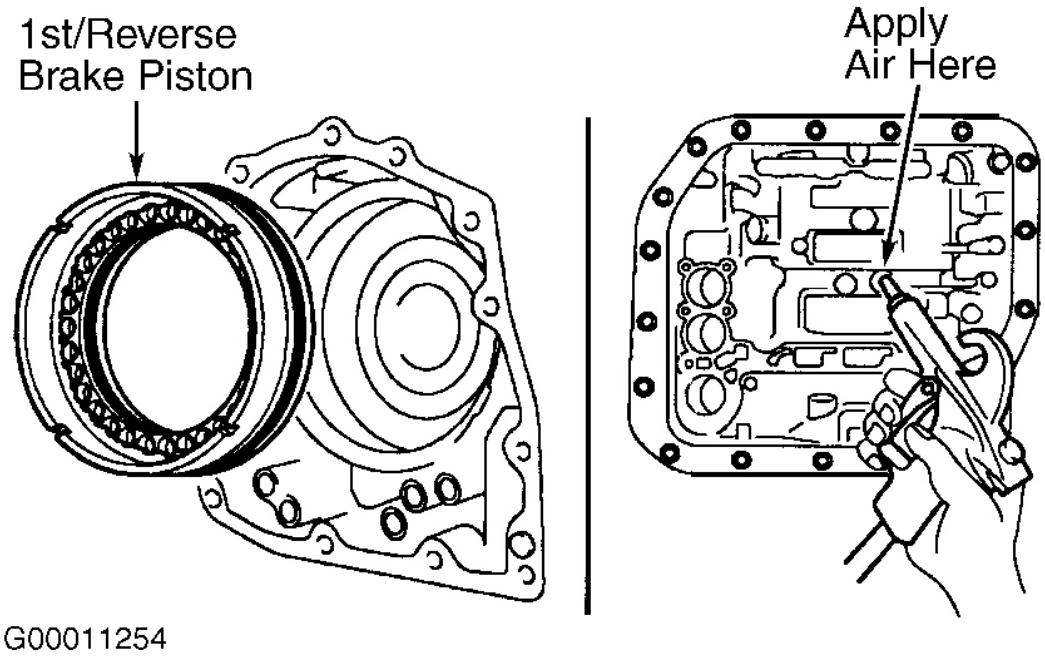

Fig. 28: Removing 1st/Reverse Brake Piston
Courtesy of TOYOTA MOTOR SALES, U.S.A., INC.

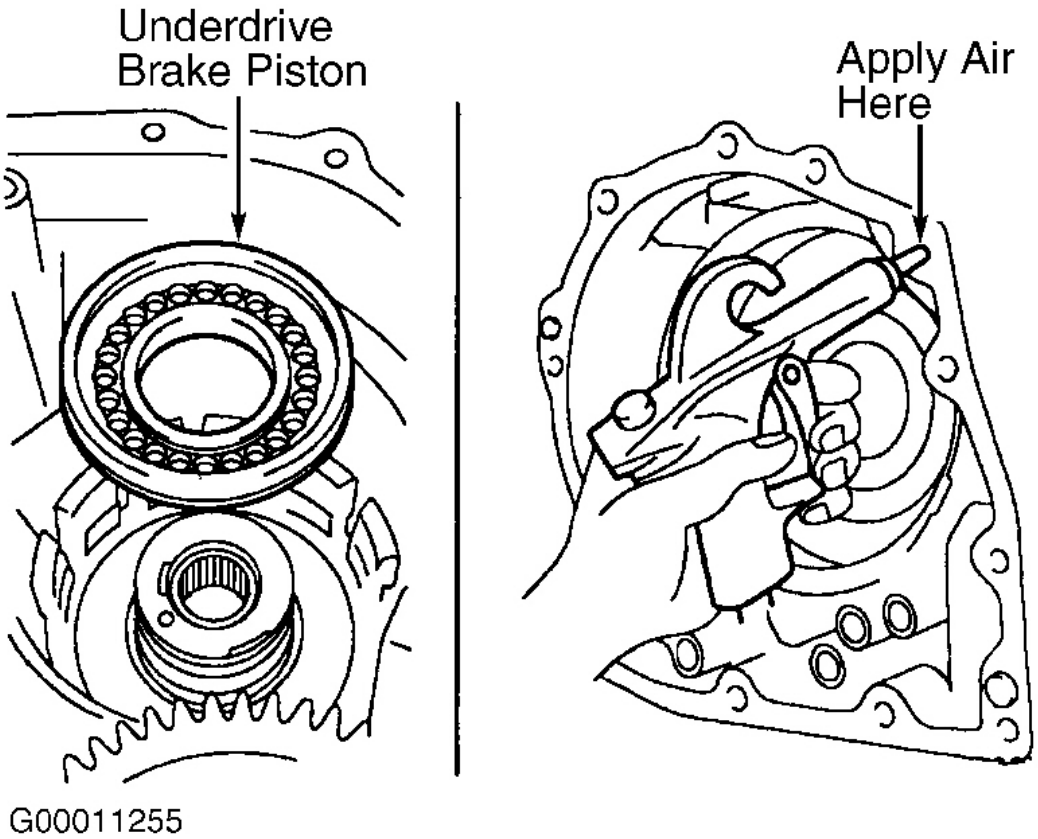

Fig. 29: Removing Underdrive Brake Piston
Courtesy of TOYOTA MOTOR SALES, U.S.A., INC.

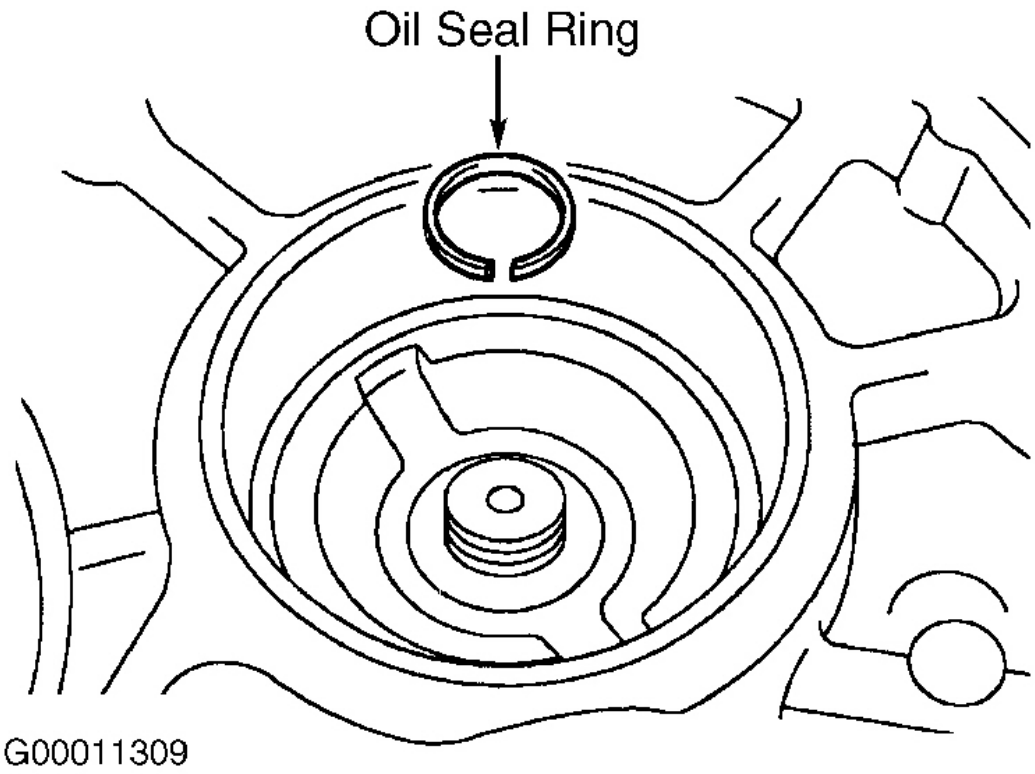

Fig. 30: Removing & Installing Transaxle Housing Oil Seal Ring
Courtesy of TOYOTA MOTOR SALES, U.S.A., INC.

COMPONENT DISASSEMBLY & REASSEMBLY

OIL PUMP ASSEMBLY

Disassembly

Using 2 screwdrivers, turn drive gear and check for smooth rotation. Remove 2 oil seal rings. Using T30 Torx socket, remove 11 bolts attaching oil pump body and stator shaft. Remove "O" ring from oil pump body. See **Fig. 31**. Note direction and location of drive and driven gears. Leave gears in oil pump body for inspection.

Inspection

1. Check body clearance of driven gear. Push driven gear to one side of body. Using a feeler gauge, measure clearance. See **Fig. 32**. Body clearance should be .003-.006" (.07-.15 mm). Maximum body clearance is .012" (.30 mm). If body clearance exceeds specification, replace oil pump body.
2. Using a feeler gauge, check tip clearance of driven gear. Measure between gear teeth and crescent-shaped part of oil pump body. See **Fig. 33**. Tip clearance should be .004-.006" (.11-.15 mm). Maximum tip

clearance is .012" (.30 mm). If tip clearance exceeds specification, replace oil pump body.

3. Check side clearance of both gears. Use a steel straightedge and feeler gauge to measure side clearance of both gears. See **Fig. 34**. Side clearance should be .0008-.0016" (.020-.040 mm). Maximum side clearance is .004" (.10 mm). Replace gears as necessary. If side clearance is not within specification after gear replacement, replace oil pump body.
4. Using a dial indicator, measure inside diameter of oil pump body bushing. See **Fig. 35**. Maximum inside diameter is 1.503" (38.18 mm). If inside diameter exceeds specification, replace oil pump body.
5. Using a dial indicator, measure inside diameter of stator shaft bushing. See **Fig. 36**. Maximum inside diameter is .849" (21.57 mm). If inside diameter exceeds specification, replace stator shaft.
6. Inspect front oil seal for cracks, damage or wear. Replace oil seal (if necessary). Remove oil seal with appropriate slide hammer. Install a NEW oil seal. Seal is properly installed when it is flush with outer edge of pump body.

Reassembly

1. Install front oil seal. Install driven gear and drive gear. Ensure top of gears are facing upward. Install stator shaft on oil pump body. Align bolt holes. Install 11 stator shaft-to-oil pump body bolts. Tighten bolts in crisscross pattern to 87 INCH lbs. (9.8 N.m).
2. Install 2 oil seal rings on oil pump. DO NOT expand ring ends excessively. Turn drive gear with screwdrivers to ensure a smooth rotation. DO NOT damage oil seal lip.

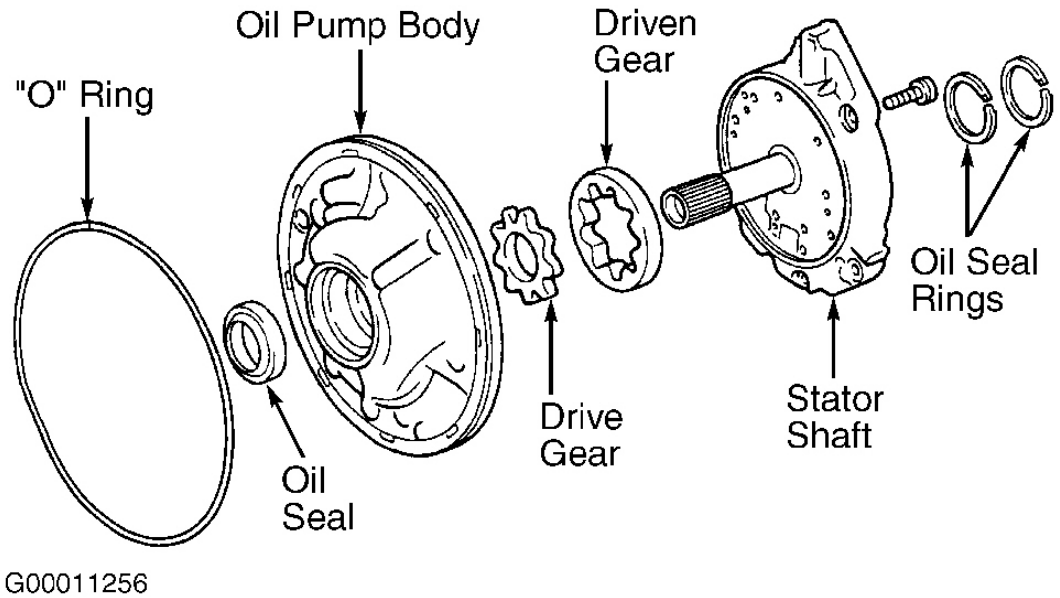

Fig. 31: Exploded View Of Oil Pump Assembly
Courtesy of TOYOTA MOTOR SALES, U.S.A., INC.

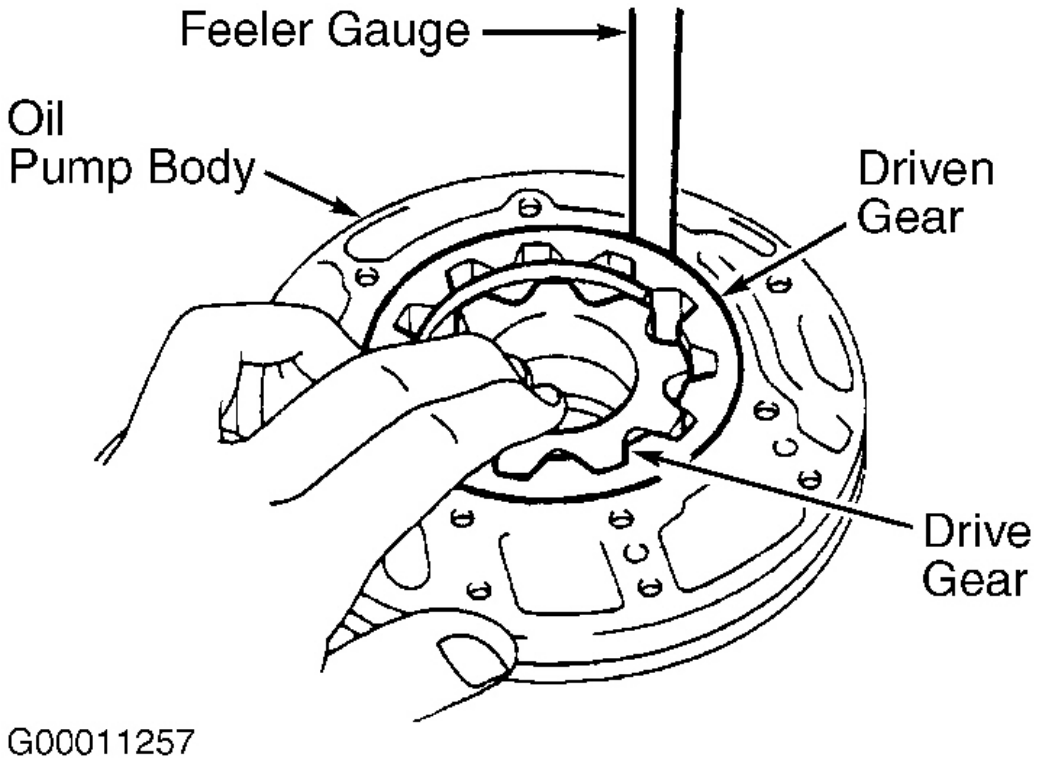

Fig. 32: Checking Oil Pump Driven Gear Clearance
Courtesy of TOYOTA MOTOR SALES, U.S.A., INC.

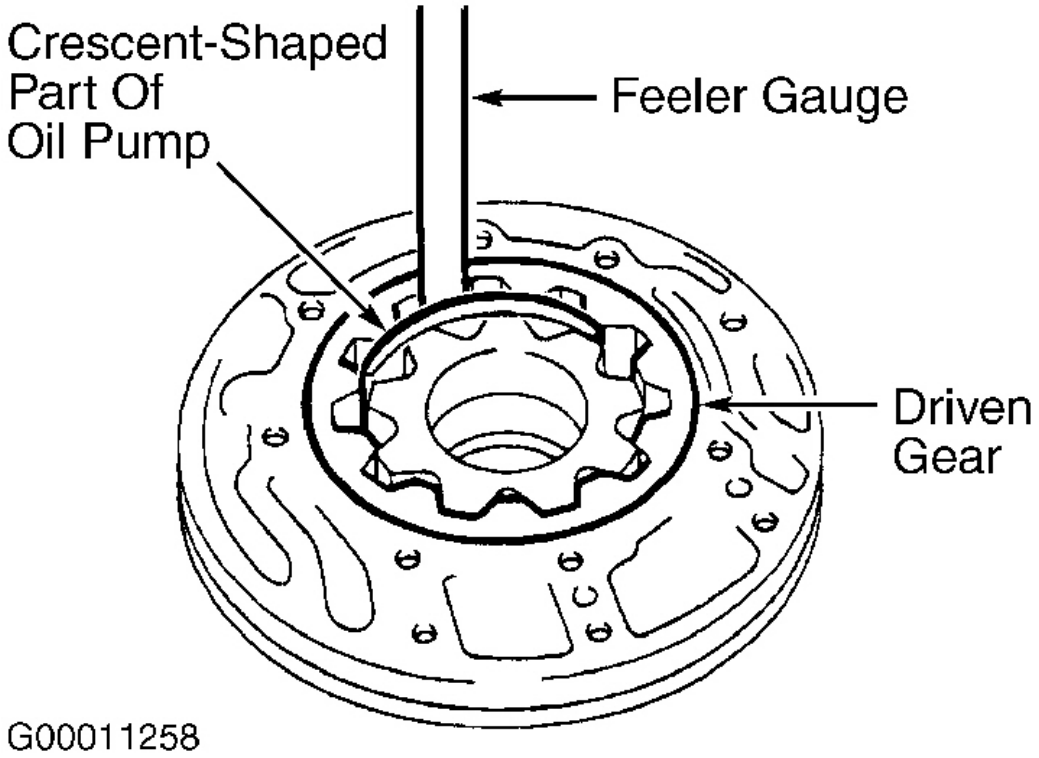

Fig. 33: Checking Oil Pump Driven Gear Tip Clearance
Courtesy of TOYOTA MOTOR SALES, U.S.A., INC.

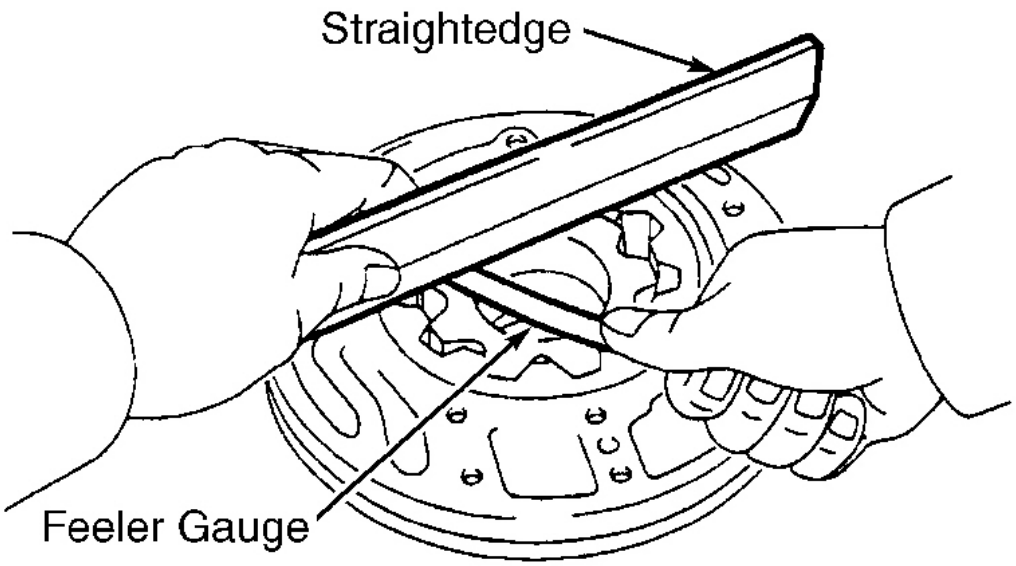

Fig. 34: Checking Oil Pump Gear Side Clearance
Courtesy of TOYOTA MOTOR SALES, U.S.A., INC.

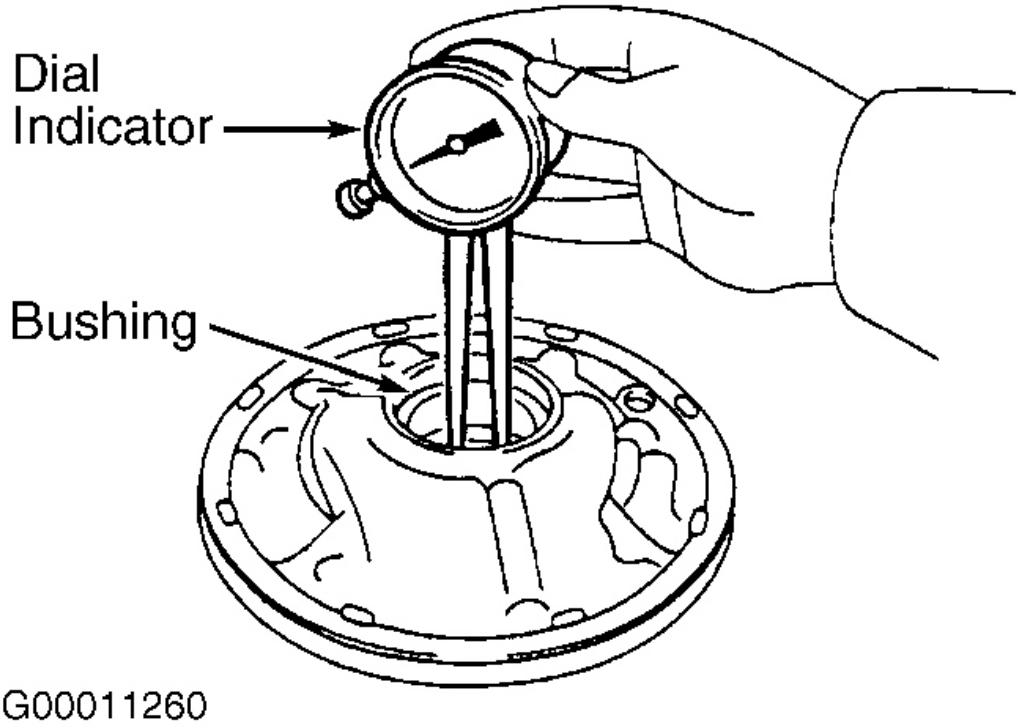

Fig. 35: Checking Oil Pump Body Bushing Diameter
Courtesy of TOYOTA MOTOR SALES, U.S.A., INC.

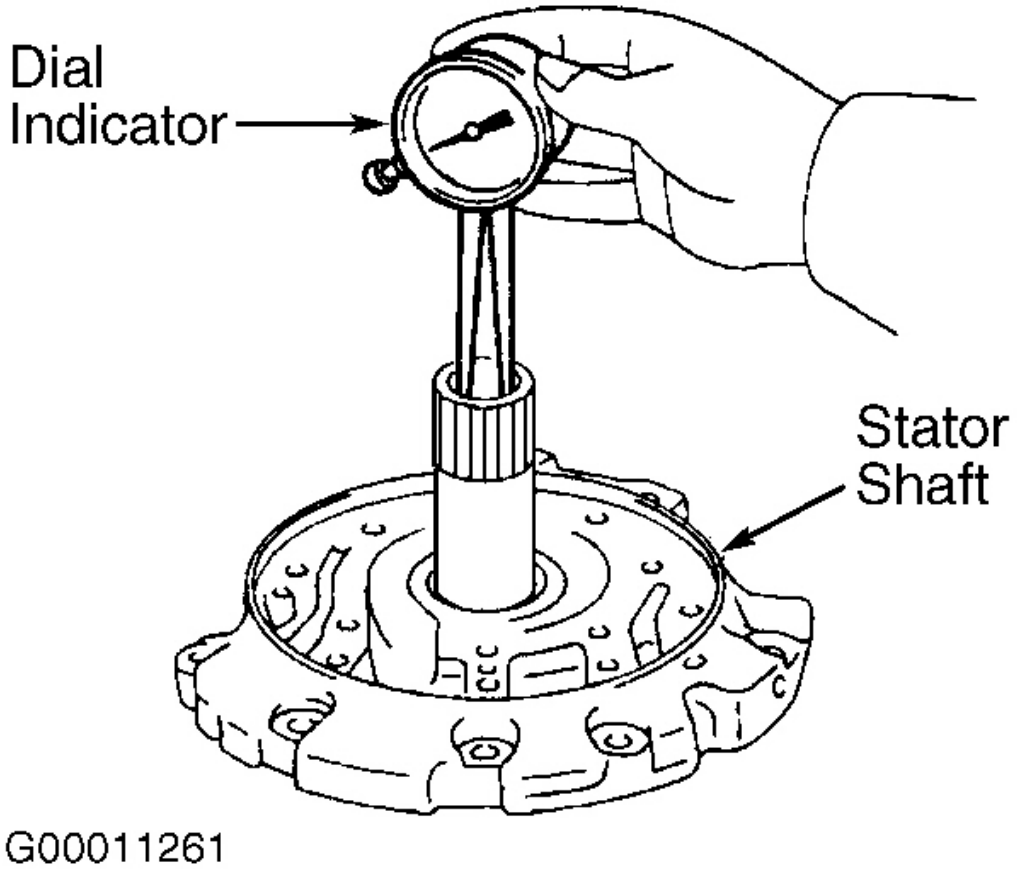

Fig. 36: Checking Stator Shaft Bushing Diameter (Multiple Clutch Hub & Underdrive Clutch Drum Bushings Are Similar)
Courtesy of TOYOTA MOTOR SALES, U.S.A., INC.

DIRECT CLUTCH

Disassembly

1. Prior to disassembly, measure piston stroke of direct clutch. Install direct clutch and needle roller bearing on transaxle rear cover. Using a dial indicator, measure direct clutch piston stroke by applying and releasing 57 psi (4 kg/cm_2) of compressed air to transaxle rear cover. See **Fig. 37**. Piston stroke should be .024-.029" (.62-.74 mm). If piston stroke is not within specification, inspect each component during disassembly.

NOTE: In the following step, do not compress piston return spring cover more

than .079" (2.00 mm) past snap ring groove. This prevents piston from becoming deformed. DO NOT expand snap ring excessively.

2. Remove direct clutch from transaxle rear cover. Using a screwdriver, remove snap ring from direct clutch drum. Remove flange, 4 discs and 4 plates. Note location of components during removal for reassembly reference. Position clutch balancer on a press. Compress piston return springs and remove snap ring. See **Fig. 38**.
3. Remove clutch balancer and piston return springs from clutch drum. Install direct clutch on transaxle rear cover. While holding direct clutch piston, apply 57 psi (4 kg/cm_2) of compressed air to transaxle rear cover to remove direct clutch piston. See **Fig. 37**.

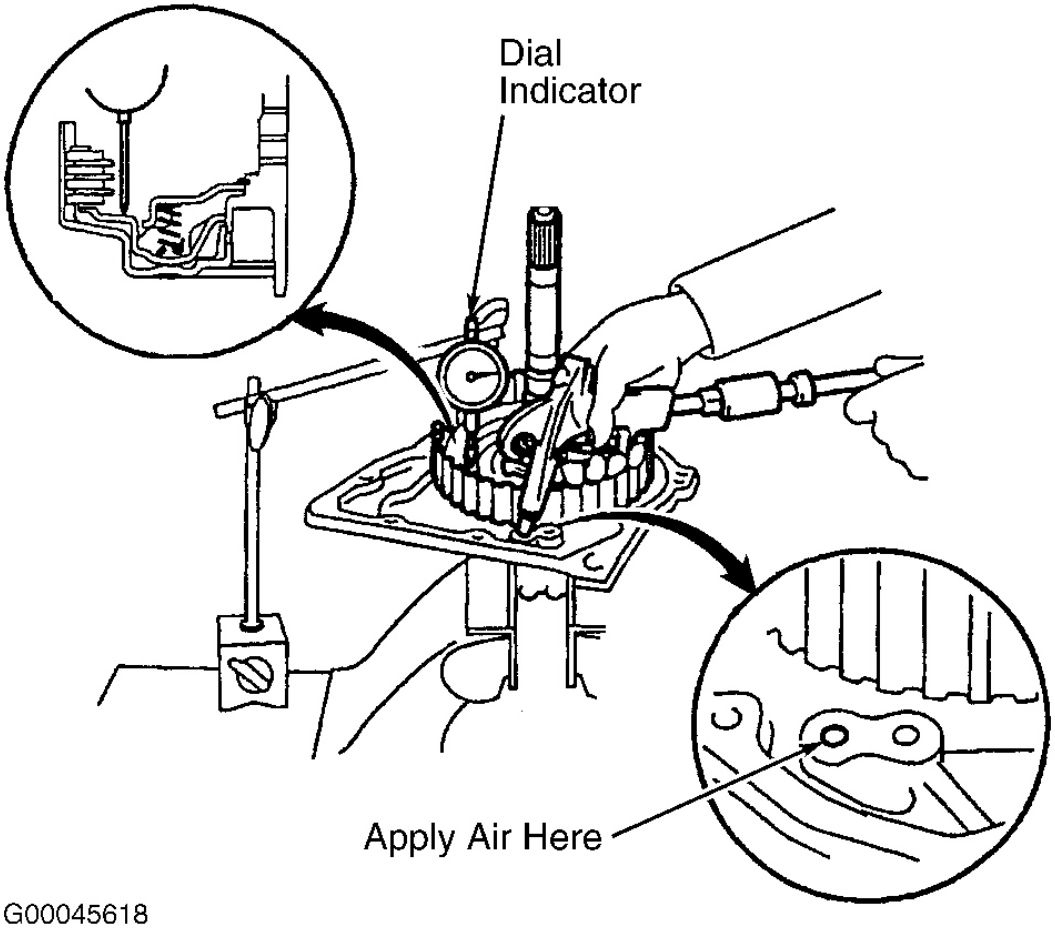

Fig. 37: Measuring Direct Clutch Piston Stroke
Courtesy of TOYOTA MOTOR SALES, U.S.A., INC.

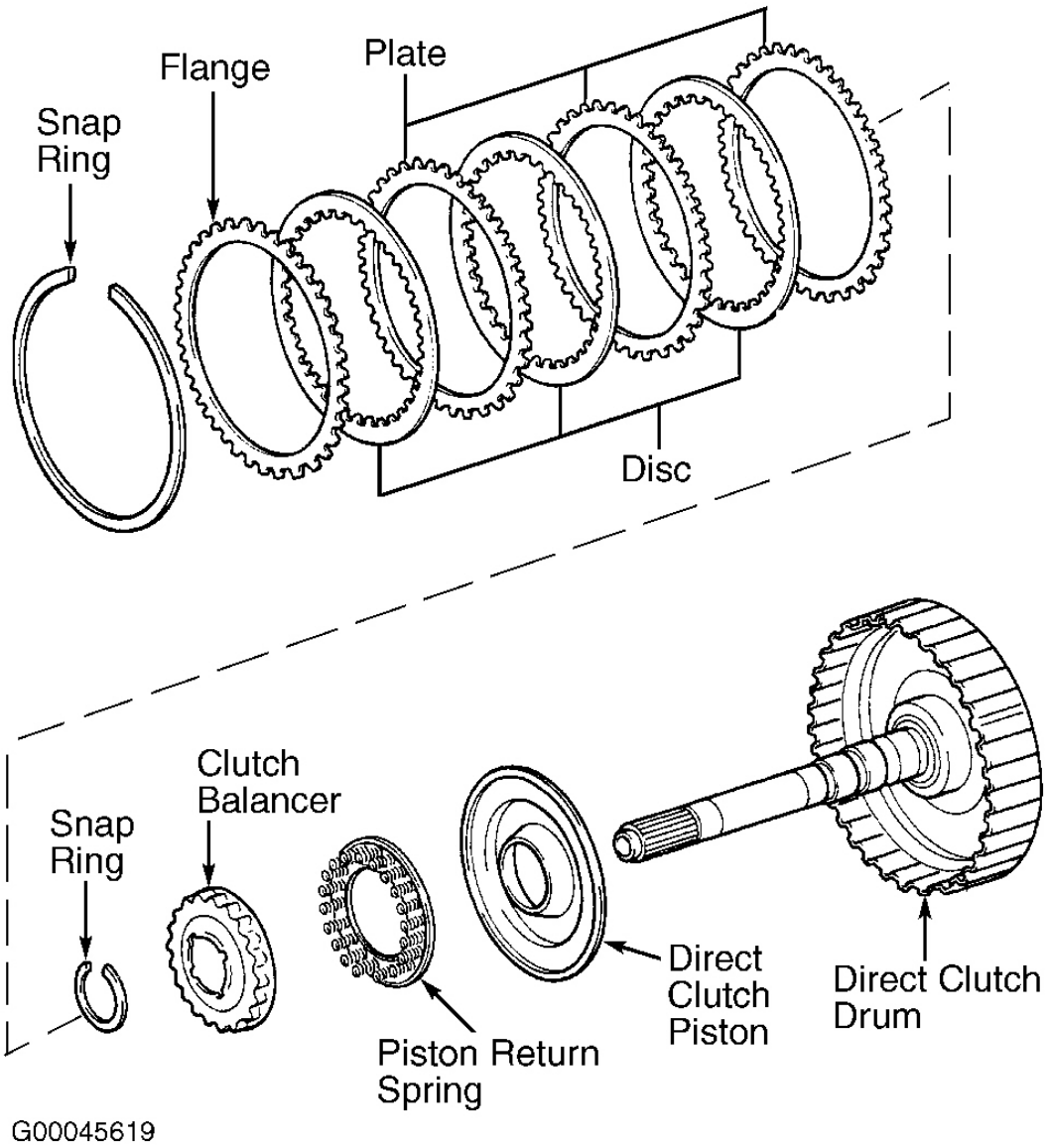

Fig. 38: Exploded View Of Direct Clutch Assembly
Courtesy of TOYOTA MOTOR SALES, U.S.A., INC.

Inspection

1. Clean all parts (except discs) with solvent. Dry parts using compressed air. Inspect discs and plates for wear or burnt areas. If disc lining is peeled or discolored, replace discs as necessary. Replace all damaged components.
2. Using vernier calipers, measure direct clutch piston return spring free length with spring mounted to spring seat. Free length should be .889" (22.58 mm). Replace springs as necessary.

NOTE: New discs must be soaked in ATF at least 15 minutes prior to reassembly.

Reassembly

1. Coat piston with ATF. Using hand pressure, press piston into direct clutch drum. Ensure piston lip seal is not damaged. Install piston return springs and clutch balancer onto direct clutch drum. Set snap ring in position.

NOTE: In the following step, do not compress piston return spring cover more than .079" (2.00 mm) past snap ring groove. This prevents piston from becoming deformed. DO NOT expand snap ring excessively.

2. Using appropriate press positioned on clutch balancer, compress piston return springs. Using snap ring expander, install snap ring in direct clutch drum groove. Ensure end gap of spring is not aligned with gaps in clutch balancer hub.
3. Install 4 plates and 4 discs, starting with plate and alternating with disc. Install flange on top of disc. See **Fig. 38**. Install snap ring. Ensure end gap of snap ring is not aligned with cutouts of direct clutch drum.
4. If disc, plate or flange have been replaced, check piston stroke. Install direct clutch and needle roller bearing on transaxle rear cover. Using a dial indicator, measure direct clutch piston stroke by applying and releasing 57 psi (4 kg/cm_2) of compressed air to transaxle rear cover. See **Fig. 37**.
5. Piston stroke should be .024-.029" (.62-.74 mm). If piston stroke is not within specification, disassemble and reassemble direct clutch components.
6. Measure piston stroke again. If measurement is still not within specification, replace flange. Flange is available in 6 thicknesses, from .118" (3.00 mm) to .138" (3.50 mm) in increments of .004" (.10 mm).
7. Check direct clutch operation. Insert rear planetary sun gear into direct clutch. Ensure rear planetary sun gear rotates in both directions. If sun gear does not rotate as described, disassemble and inspect direct clutch.

FORWARD CLUTCH

Disassembly

1. Prior to disassembly, measure piston stroke of forward clutch. Install forward clutch on oil pump assembly. Using a dial indicator, measure forward clutch piston stroke by applying and releasing 57 psi (4 kg/cm_2) of compressed air to oil pump. See **Fig. 39**. Opening in oil pump is large. To prevent air from discharging, surround air nozzle with shop towel. Piston stroke should be .056-.069" (1.41-1.75 mm). If piston stroke is not within specification, inspect each component during disassembly.
2. Remove forward clutch from oil pump assembly. Using a screwdriver, remove snap ring from forward clutch drum. Remove flange, 4 discs and 4 plates. Note location of components during removal for reassembly reference. Position clutch balancer on a press. Compress piston return springs. Using snap ring expander, remove snap ring. See **Fig. 40**.
3. Remove press, clutch balancer and piston return springs. Install forward clutch on oil pump assembly. While holding forward clutch piston, apply 57 psi (4 kg/cm_2) of compressed air to oil pump to remove forward clutch piston. See **Fig. 39**. Opening in oil pump is large. To prevent air from discharging,

surround air nozzle with shop towel.

4. If piston cannot be removed using compressed air, wrap needle nose pliers tips with vinyl tape and remove piston using pliers. Remove 2 "O" rings from piston.

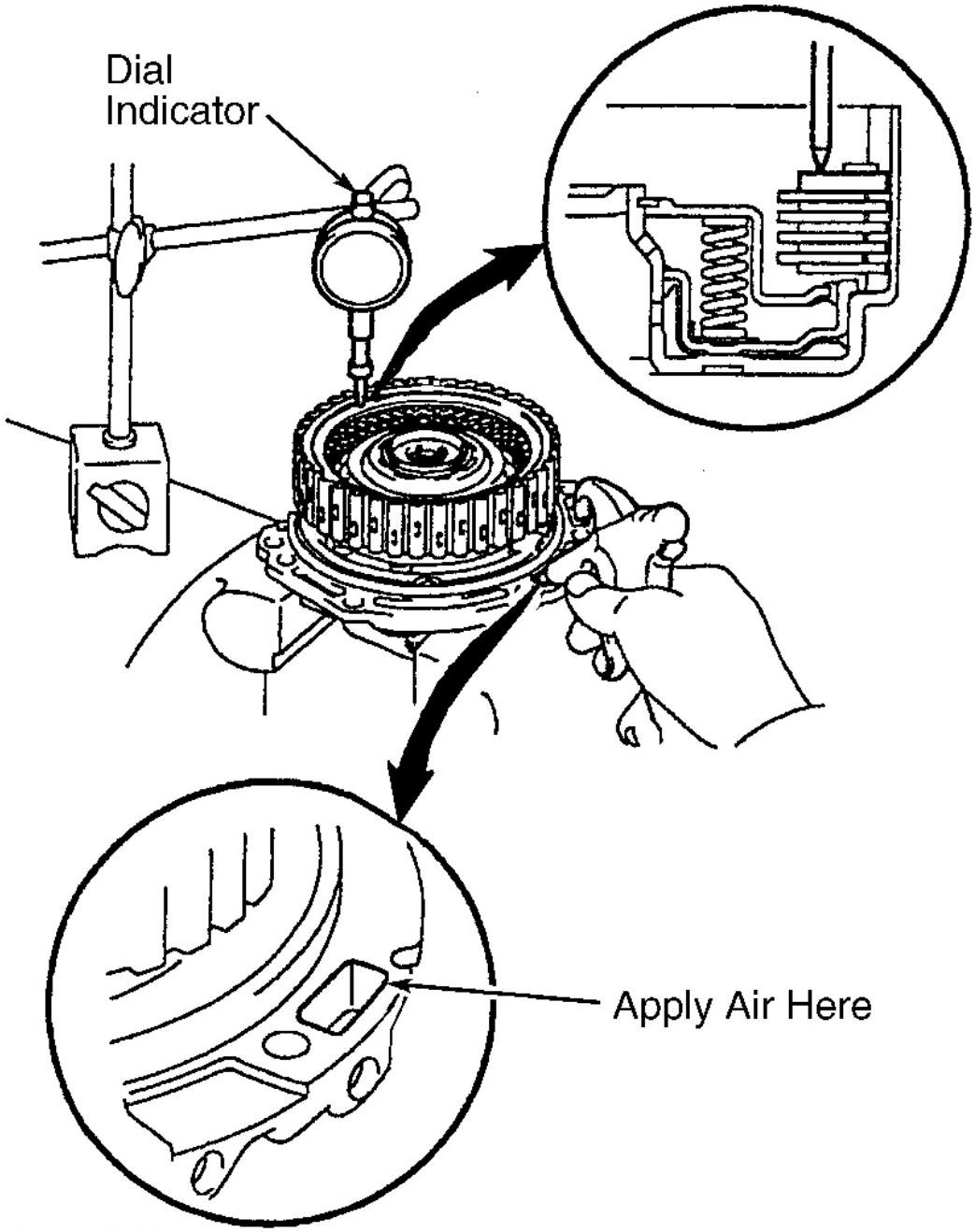

G00045620

Fig. 39: Measuring Forward Clutch Piston Stroke
Courtesy of TOYOTA MOTOR SALES, U.S.A., INC.

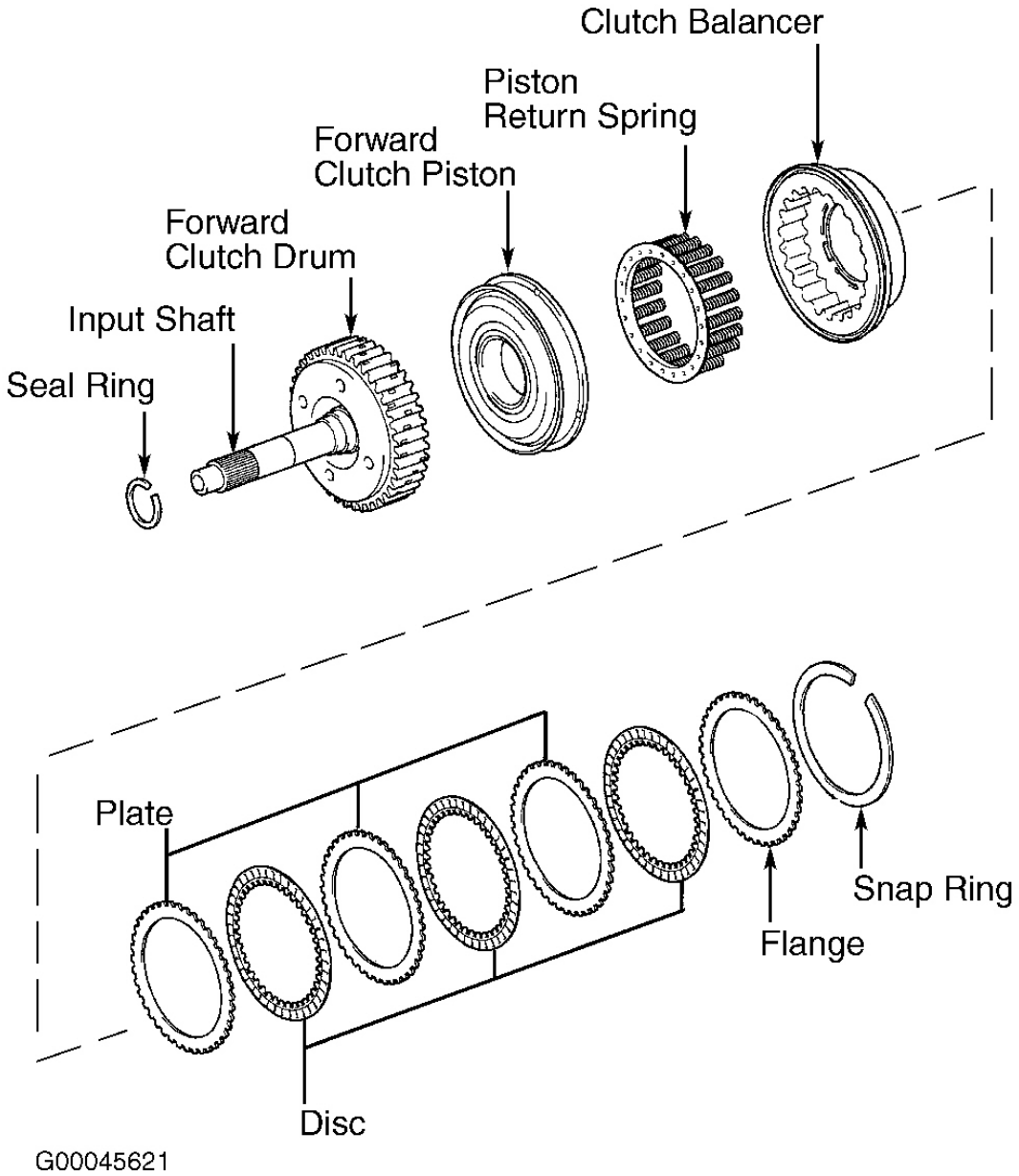

Fig. 40: Exploded View Of Forward Clutch Assembly
Courtesy of TOYOTA MOTOR SALES, U.S.A., INC.

Inspection

1. Clean all parts (except discs) with solvent. Dry parts using compressed air. Inspect discs and plates for

wear or burnt areas. If disc lining is peeled or discolored, replace discs as necessary. Replace all damaged components.

2. Using vernier calipers, measure forward clutch piston return spring free length with spring mounted to spring seat. Free length should be 1.114" (28.23 mm). Replace springs as necessary.
3. Using a dial indicator, measure inside diameter of multiple clutch hub bushing. See **Fig. 36**. Maximum inside diameter is .909" (23.09 mm). If inside diameter exceeds specification, replace multiple clutch hub.

NOTE: New discs must be soaked in ATF for 15 minutes prior to reassembly.

Reassembly

1. Coat NEW piston "O" rings with ATF. Install "O" rings on forward clutch piston. Using hand pressure, press piston into forward clutch drum. Ensure "O" rings are not damaged. Set piston return springs in position.

NOTE: In the following step, do not compress piston return spring cover more than .079" (2.00 mm) past snap ring groove. This prevents piston from becoming deformed. DO NOT expand snap ring excessively.

2. Install clutch balancer on spring seat. Install press on clutch balancer. Compress piston return springs. Using snap ring expander, install snap ring in forward clutch drum groove. Ensure end gap of spring is not aligned with gap in spring retainer hub
3. Install 4 plates and 4 discs, starting with plate and alternating with disc. Install flange on top of disc. See **Fig. 40**. Install snap ring. Ensure end gap of snap ring is not aligned with cutouts of forward clutch drum.
4. If disc, plate or flange have been replaced, check piston stroke. Install forward clutch on oil pump assembly. Using a dial indicator, measure forward clutch piston stroke by applying and releasing 57 psi (4 kg/cm_2) of compressed air to oil pump. See **Fig. 39**. Opening in oil pump is large. To prevent air from discharging, surround air nozzle with shop towel. Piston stroke should be .056-.069" (1.41-1.75 mm). If piston stroke is not within specification, disassemble and reassemble forward clutch components.
5. Measure piston stroke again. If measurement is still not within specification, replace flange. Flange is available in 5 thicknesses from .118" (3.00 mm) to .142" (3.60 mm) in increments of .006" (.15 mm). Coat thrust bearings with ATF and install.
6. Check forward clutch operation. Insert multiple clutch hub into forward clutch. Ensure forward clutch rotates in both directions. If forward clutch does not rotate as described, disassemble and inspect forward clutch.

UNDERDRIVE PLANETARY GEAR

Disassembly

1. Using gear stand, lock nut socket, adapter and INCH-lb. torque wrench with a fulcrum length of 6.30" (160.0 mm), measure underdrive input shaft starting torque for reference. See **Fig. 41**. Starting torque should be 6.2-39.0 INCH lbs. (.7-4.4 N.m).
2. Using pin punch and hammer, loosen staked part of lock nut. Clamp underdrive planetary gear in a soft-

jawed vise. Use care not to damage differential drive pinion. Using appropriate socket, remove lock nut. See **Fig. 42**. Remove gear from vise. Using appropriate puller, remove cylindrical roller bearing inner race. See **Fig. 43**.

3. Using gear stand and appropriate press, remove differential drive pinion, parking lock gear, counter driven gear with underdrive planetary ring gear and front tapered roller bearing. See **Fig. 43**.
4. Clamp underdrive planetary gear in soft-jawed vise. Using a hammer and chisel, cut off rear tapered roller bearing cover. Remove roller and cover. Using appropriate puller, remove rear tapered roller bearing from underdrive planetary gear. Using snap ring pliers, remove snap ring. Remove underdrive planetary ring gear from counter driven gear.

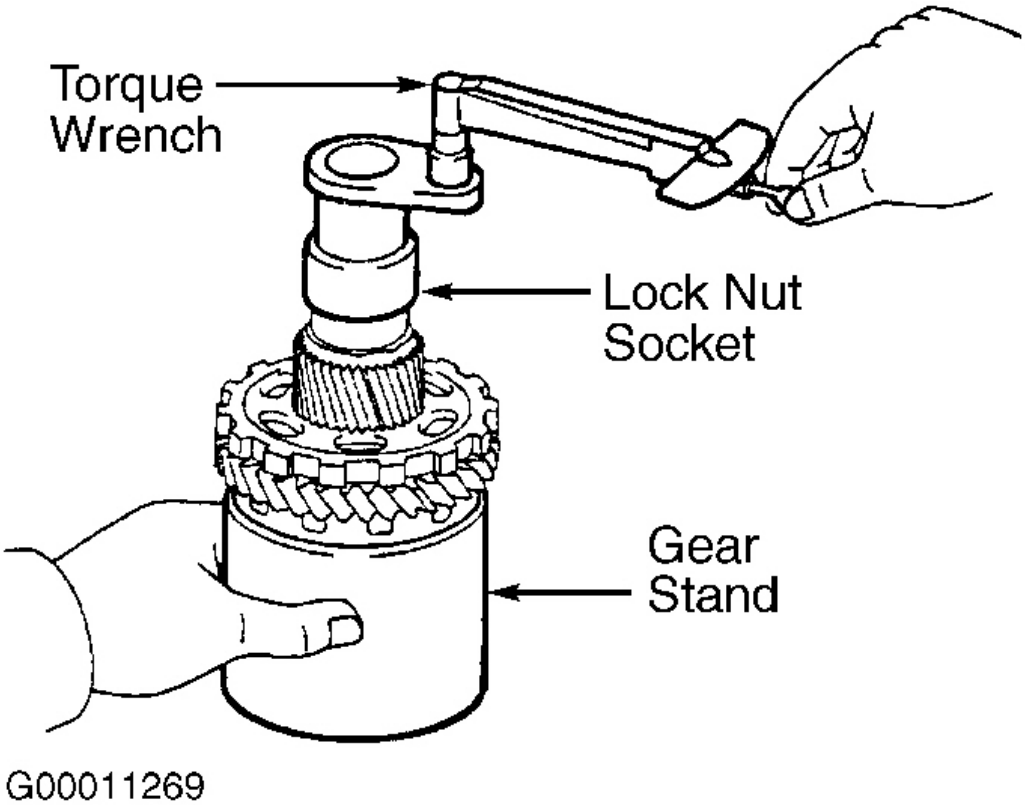

Fig. 41: Measuring Underdrive Planetary Gear Input Shaft Starting Torque
Courtesy of TOYOTA MOTOR SALES, U.S.A., INC.

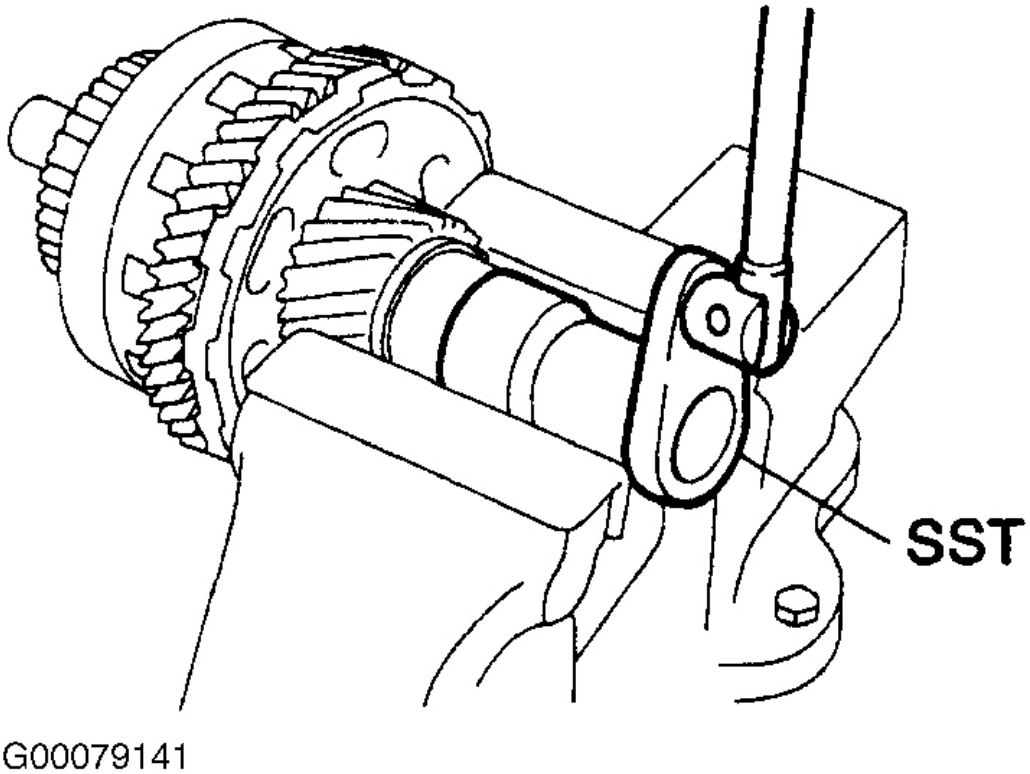

Fig. 42: Removing/Installing Underdrive Planetary Gear Lock Nut
Courtesy of TOYOTA MOTOR SALES, U.S.A., INC.

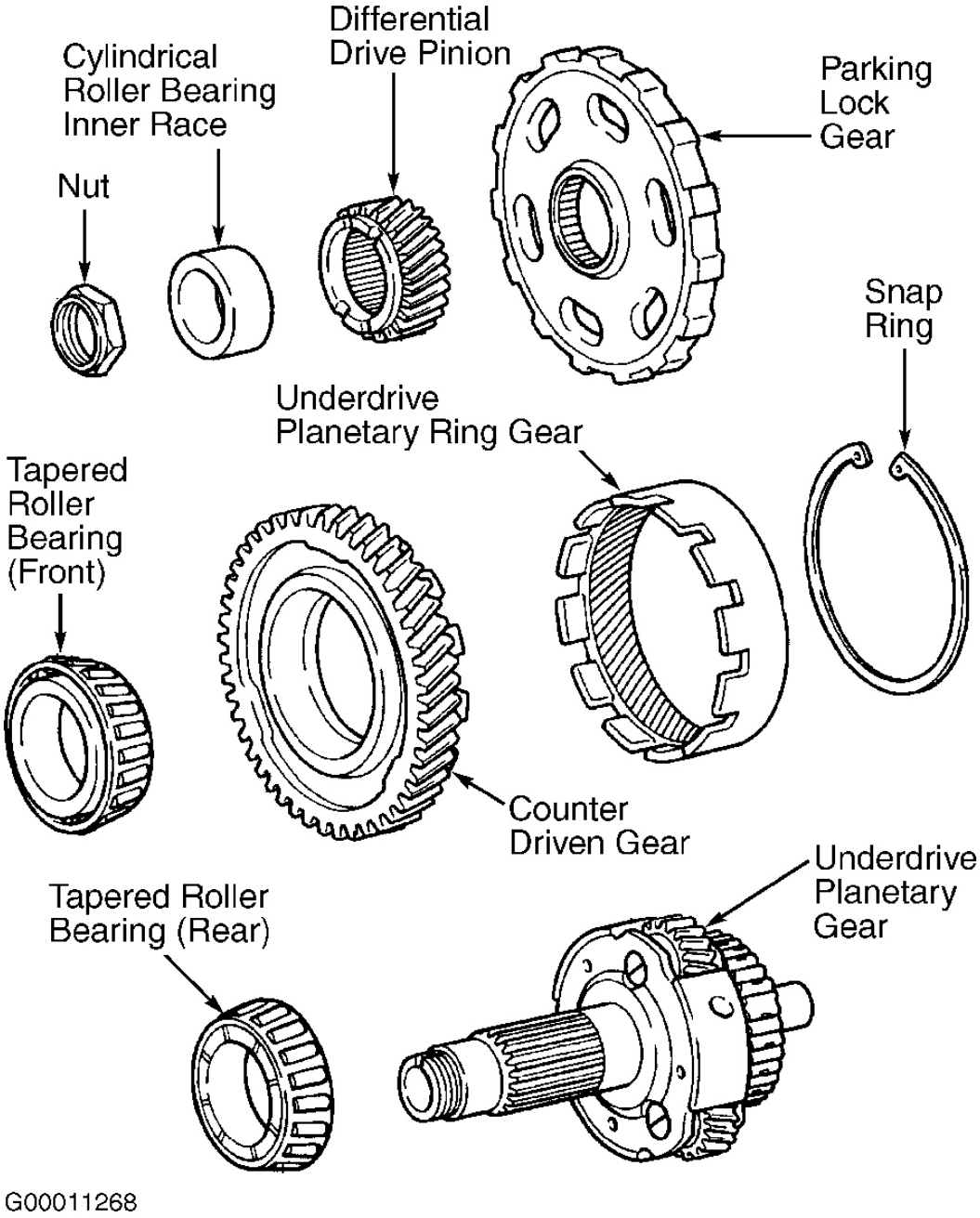

Fig. 43: Exploded View Of Underdrive Planetary Gear Assembly
Courtesy of TOYOTA MOTOR SALES, U.S.A., INC.

Reassembly

1. Install NEW snap ring onto tapered roller bearing outer race. Using a piston ring compressor, squeeze

snap ring and install outer race into counter driven gear (if removed). Install underdrive planetary ring gear into counter driven gear. Install snap ring. Using appropriate press, install rear tapered roller bearing onto underdrive planetary gear. Press bearing until it becomes flat at the bottom.

2. Install counter driven gear with underdrive planetary ring gear onto underdrive planetary gear. Using appropriate press, install front tapered roller bearing onto underdrive planetary gear while rotating counter driven gear.
3. Using appropriate press, install parking lock gear while rotating counter driven gear. Using press, install differential drive pinion, then install cylindrical roller bearing inner race while rotating counter driven gear.
4. Clamp underdrive planetary gear in a soft-jawed vise. Use care not to damage differential drive pinion. Using appropriate socket, install NEW lock nut and tighten to 207 ft. lbs. (280 N.m). Remove gear from vise. Using gear stand, lock nut socket, adapter and INCH-lb. torque wrench with a fulcrum length of 6.30" (160.0 mm), ensure underdrive input shaft starting torque is 6.2-39.0 INCH lbs. (.7-4.4 N.m). See **Fig. 41**. Using pin punch and hammer, stake lock nut. Ensure lock nut is not cracked.

UNDERDRIVE CLUTCH

Disassembly

1. Prior to disassembly, check piston stroke of underdrive clutch. Install underdrive clutch into transaxle case. DO NOT damage oil seal rings. Install dial indicator onto underdrive clutch flange. Apply and release 57 psi (4 kg/cm_2) of compressed air to transaxle case. See **Fig. 44**.
2. Piston stroke should be .059-.075" (1.51-1.90 mm). If piston stroke is not within specification, inspect discs and plates during disassembly. Using a screwdriver, remove drum snap ring. Remove flange, 3 discs and 3 plates from underdrive clutch drum. Note location of components during removal for reassembly reference. See **Fig. 45**.

NOTE: In the following step, do not compress piston return spring cover more than .079" (2.00 mm) past snap ring groove. This prevents piston from becoming deformed. DO NOT expand snap ring excessively.

3. Using appropriate press placed on clutch balancer, compress piston return springs. Using snap ring expander, remove snap ring. Remove press, clutch balancer and piston return springs.
4. Install underdrive clutch into transaxle case. DO NOT damage oil seal rings. While holding underdrive clutch piston, apply 57 psi (4 kg/cm_2) of compressed air to transaxle case to remove underdrive clutch piston. See **Fig. 44**. Remove "O" ring from underdrive clutch drum.

Inspection

1. Clean all parts (except discs) with solvent. Dry parts using compressed air. Inspect discs and plates for wear or burnt areas. If disc lining is peeled or discolored, replace discs as necessary. Replace all damaged components.
2. Using vernier calipers, measure underdrive clutch piston return spring free length with spring mounted to spring seat. Free length should be .675" (17.14 mm). Replace springs as necessary.

3. Using a dial indicator, measure inside diameter of underdrive clutch drum bushing. See **Fig. 36**. Maximum inside diameter is 1.285" (32.64 mm). If inside diameter exceeds specification, replace underdrive clutch drum.

Reassembly

1. Coat NEW "O" ring with ATF and install on underdrive clutch drum. Coat underdrive clutch piston with ATF. Using hand pressure, install piston into underdrive clutch drum. Use care not to damage "O" ring. Install piston return springs and clutch balancer to underdrive clutch drum. Set snap ring in position.

NOTE: In the following step, do not compress piston return spring cover more than .079" (2.00 mm) past snap ring groove. This prevents piston from becoming deformed. DO NOT expand snap ring excessively.

2. Using appropriate press positioned on clutch balancer, compress piston return springs. Using snap ring expander, install snap ring in underdrive clutch drum groove. Ensure end gap of spring is not aligned with gap in clutch balancer hub.
3. Install 3 plates and 3 discs, starting with plate and alternating with disc. Install flange on top of disc. See **Fig. 45**. Install snap ring. Ensure end gap of snap ring is not aligned with cutouts of underdrive clutch drum.
4. Check underdrive clutch piston stroke. Install underdrive clutch into transaxle case. DO NOT damage oil seal rings. Install dial indicator onto underdrive clutch flange. Apply and release 57 psi (4 kg/cm_2) of compressed air to transaxle case. See **Fig. 44**.
5. Piston stroke should be .059-.075" (1.51-1.90 mm). If piston stroke is not within specification, replace flange. Flange is available in thicknesses of .118" (3.00 mm), .126" (3.20 mm) and .134" (3.40 mm).

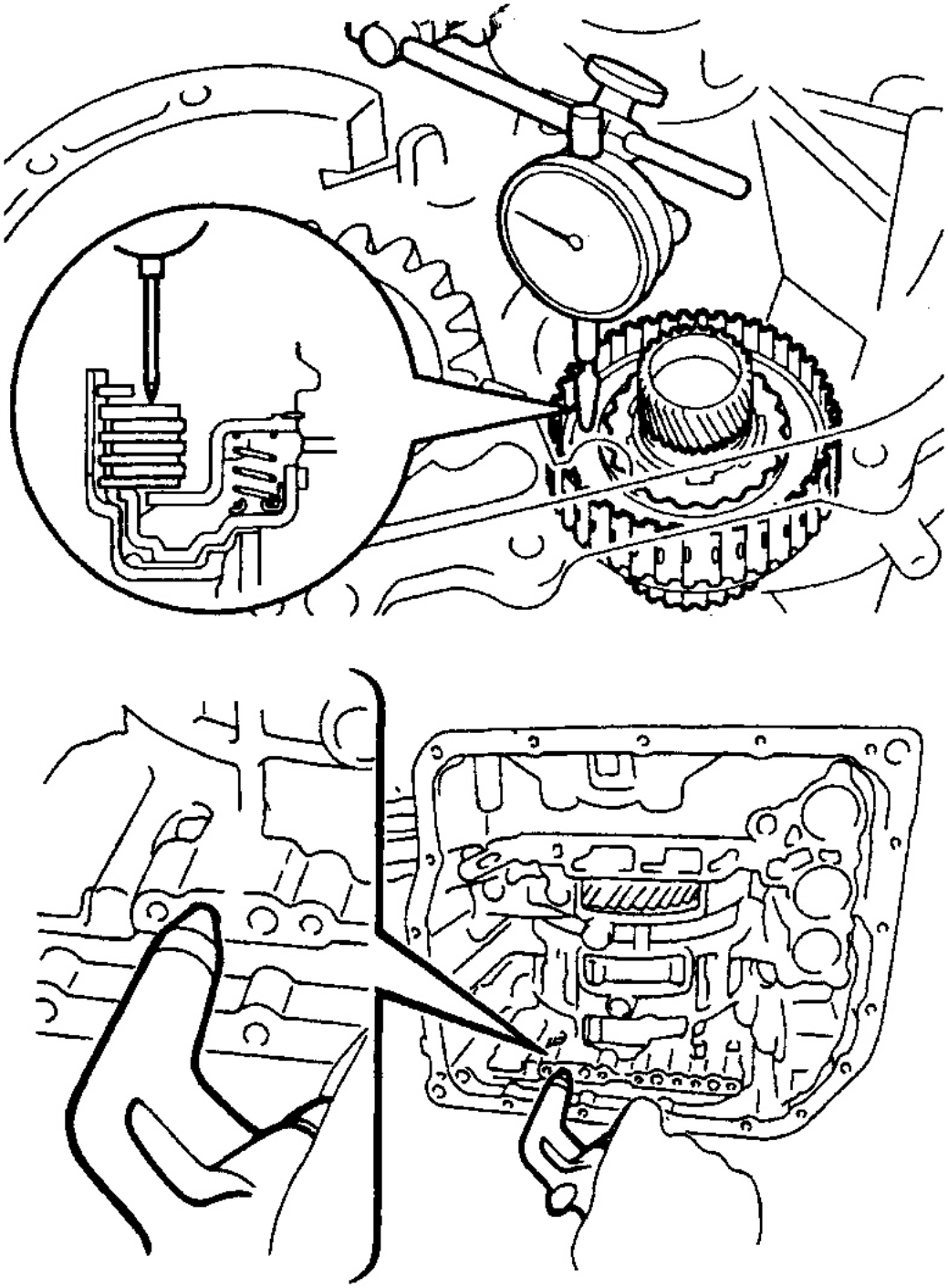

Fig. 44: Measuring Underdrive Clutch Piston Stroke

Courtesy of TOYOTA MOTOR SALES, U.S.A., INC.

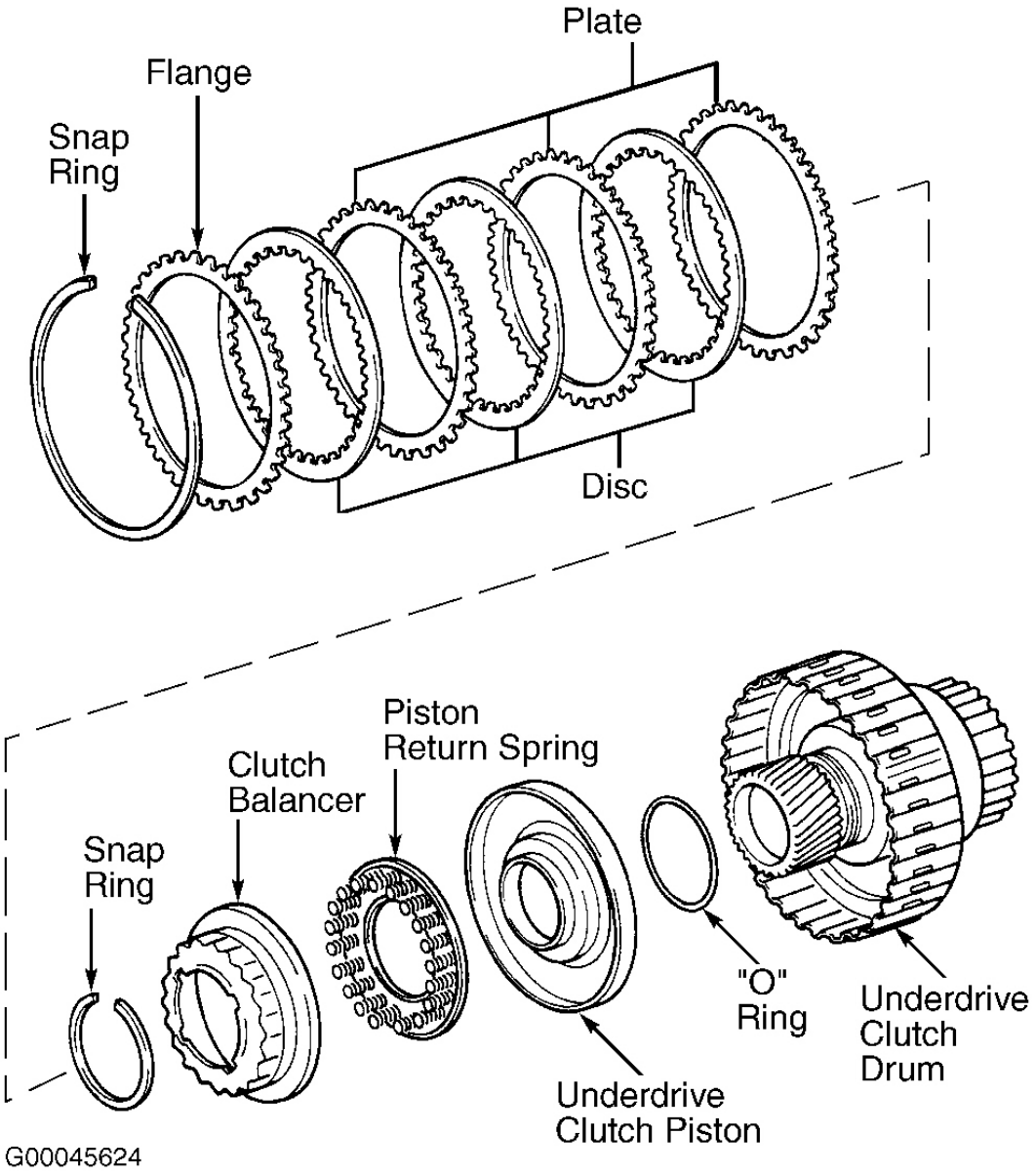

Fig. 45: Exploded View Of Underdrive Clutch Assembly
Courtesy of TOYOTA MOTOR SALES, U.S.A., INC.

VALVE BODY ASSEMBLY

NOTE: **Following procedure, specifications and exploded component views apply to all models except Highlander and Matrix. Manufacturer does not supply exploded**

views or specifications for Highlander and Matrix. Solenoid locations are the same for all models.

NOTE: **All valve body components must be installed in original location. Lay all components in sequence during removal for reassembly reference. Primary regulator valve position controls line pressure. Note location of primary regulator valve sleeve, plug and pin prior to disassembly. See Fig. 48.**

Disassembly

1. Remove 5 bolts and 5 shift solenoids. See **Fig. 46** and **Fig. 49** . Using snap ring pliers, remove 2 snap rings securing accumulator assemblies. Remove 2 washers, 4 springs and 2 pistons from upper valve body. See **Fig. 47**.
2. Remove 8 upper valve body bolts. See **Fig. 50**. Remove 7 upper valve body cover bolts. See **Fig. 51**. Remove bolt, cover and 2 pressure relief check balls. See **Fig. 52**.
3. Remove 7 lower valve body bolts. See **Fig. 53**. Hold plate against lower valve body and carefully remove lower valve body from upper valve body. Remove plate from lower valve body. DO NOT lose check balls. Note location of check balls, keys, plugs and pins in valve body. See **Fig. 54**-**Fig. 57** .

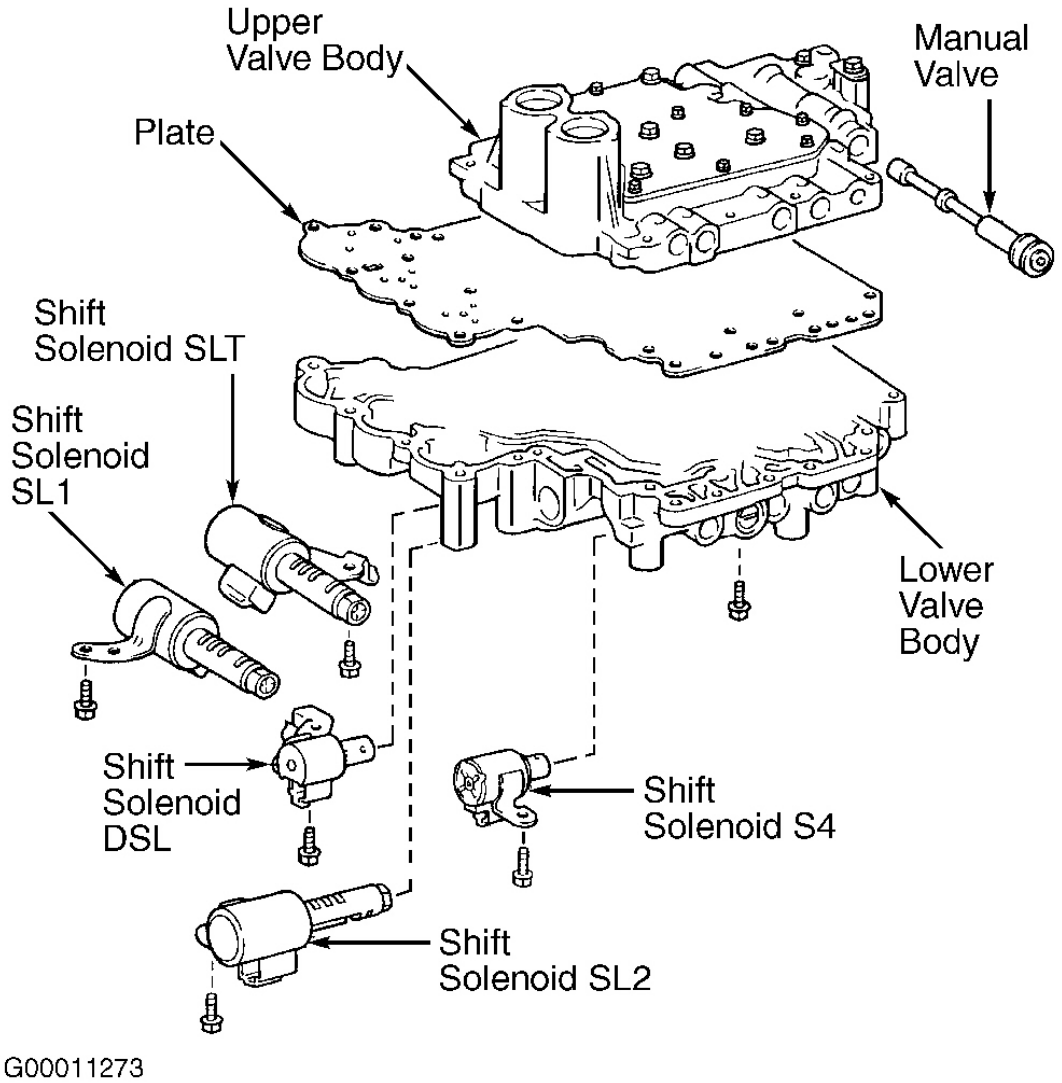

Fig. 46: Exploded View Of Valve Body Assembly
Courtesy of TOYOTA MOTOR SALES, U.S.A., INC.

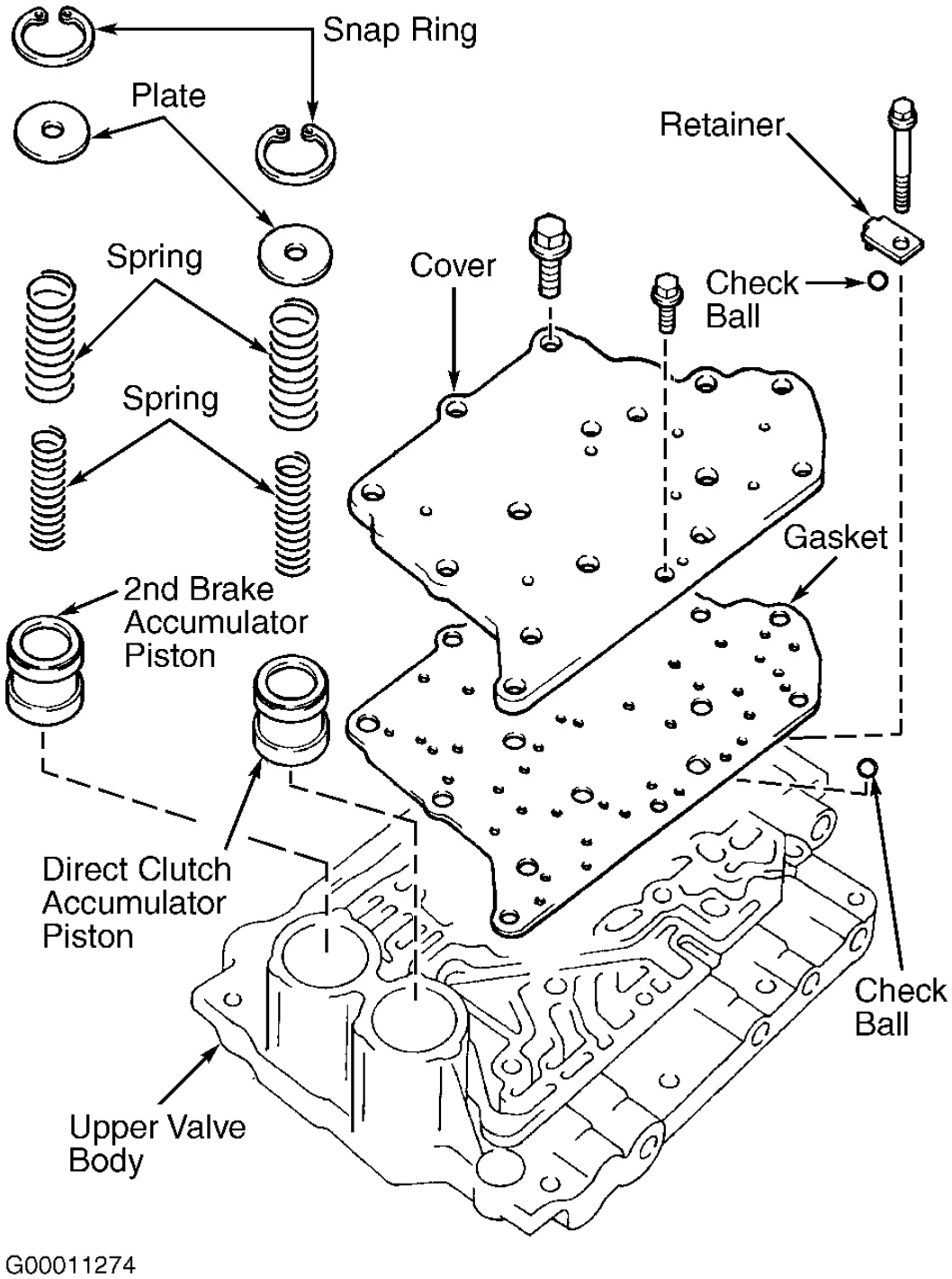

Fig. 47: Locating Upper Valve Body Accumulator Pistons, Check Balls & Bolts
Courtesy of TOYOTA MOTOR SALES, U.S.A., INC.

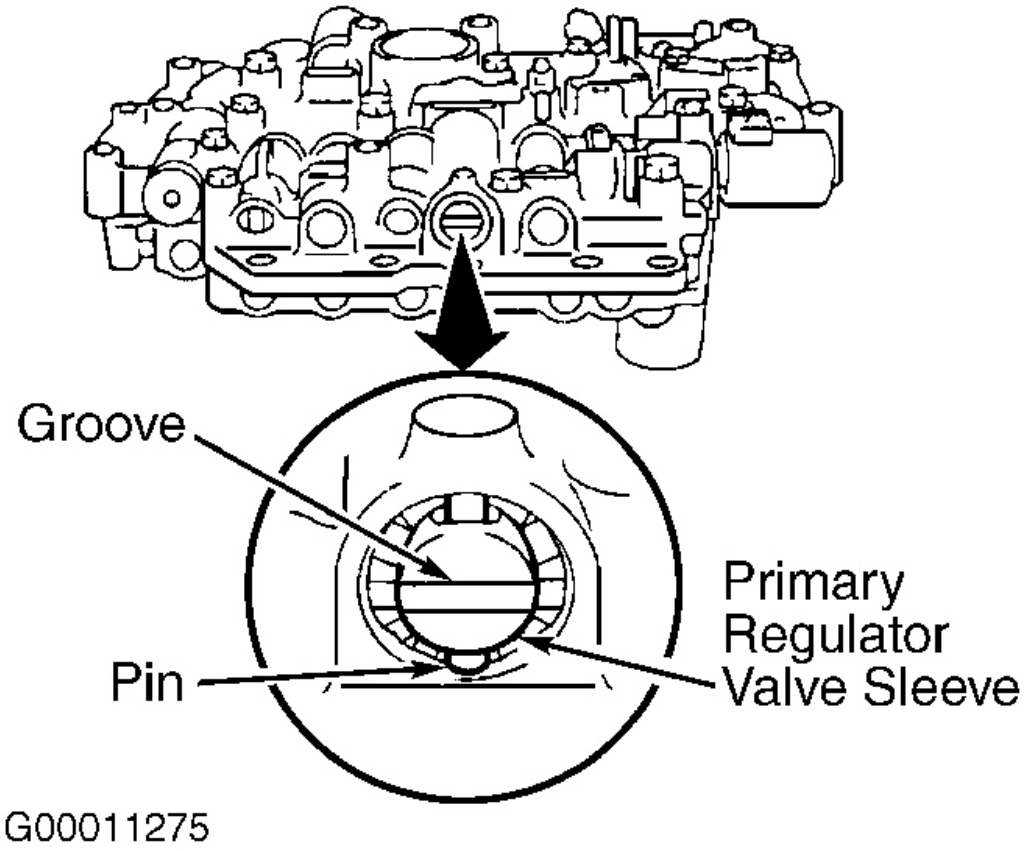

Fig. 48: Identifying Primary Regulator Valve Position
Courtesy of TOYOTA MOTOR SALES, U.S.A., INC.

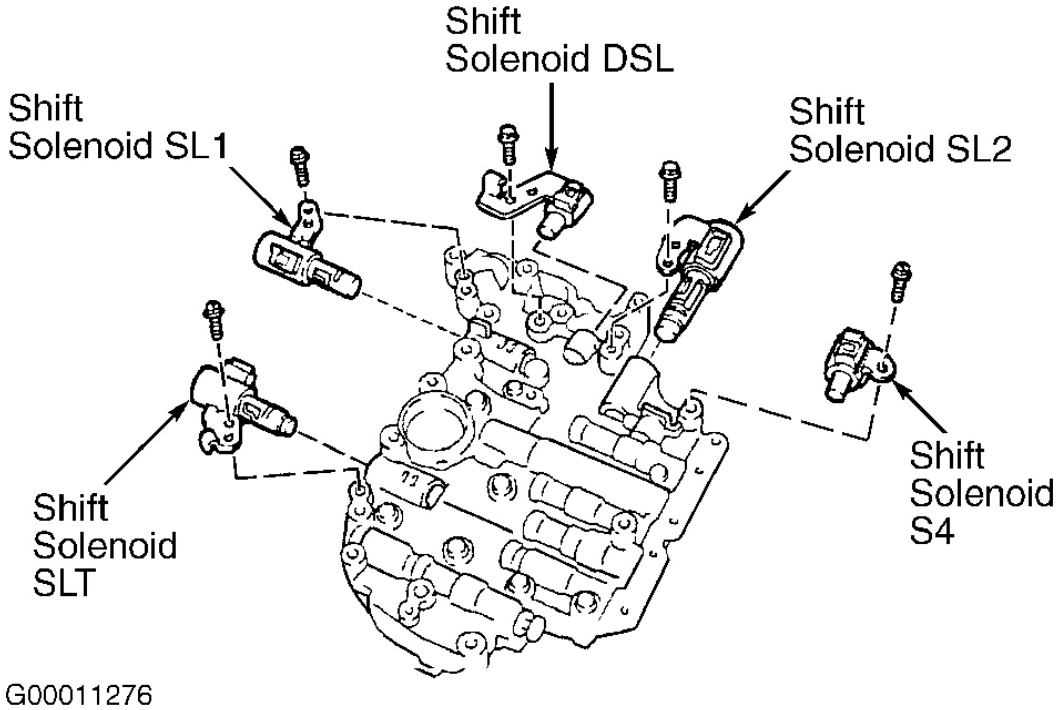

Fig. 49: Identifying Shift Solenoid Locations
Courtesy of TOYOTA MOTOR SALES, U.S.A., INC.

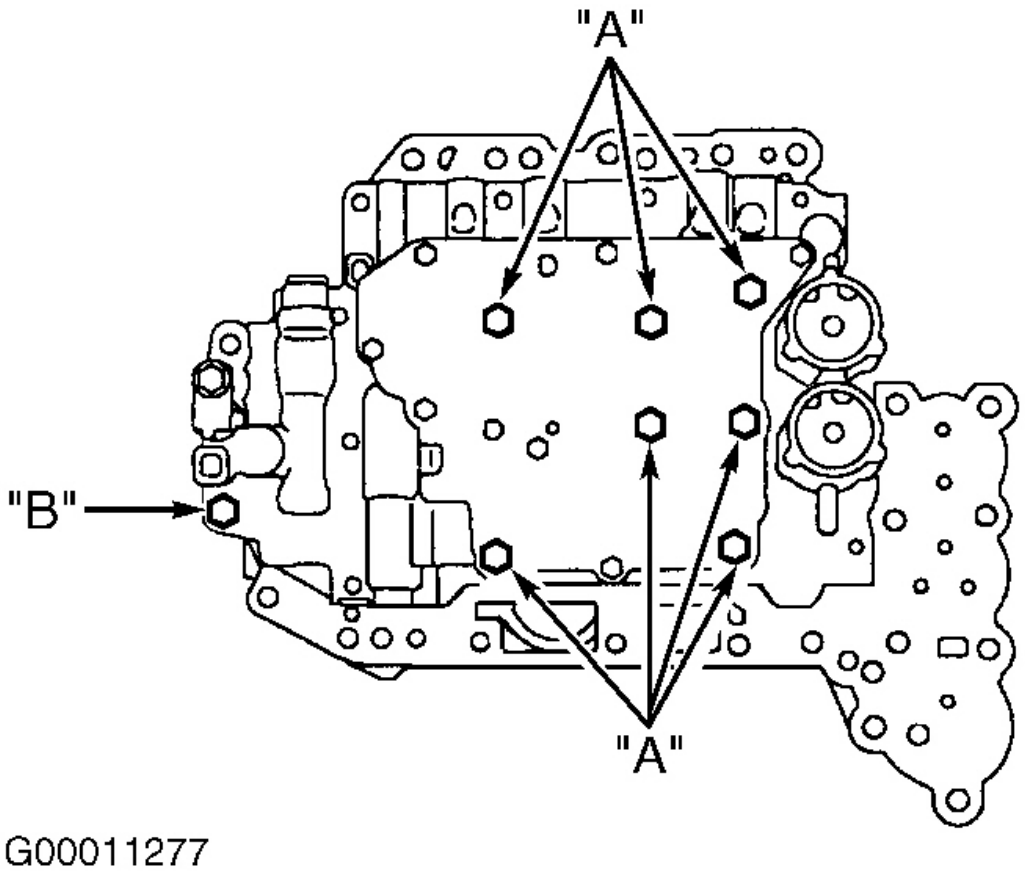

Fig. 50: Removing & Installing 8 Upper Valve Body Bolts
Courtesy of TOYOTA MOTOR SALES, U.S.A., INC.

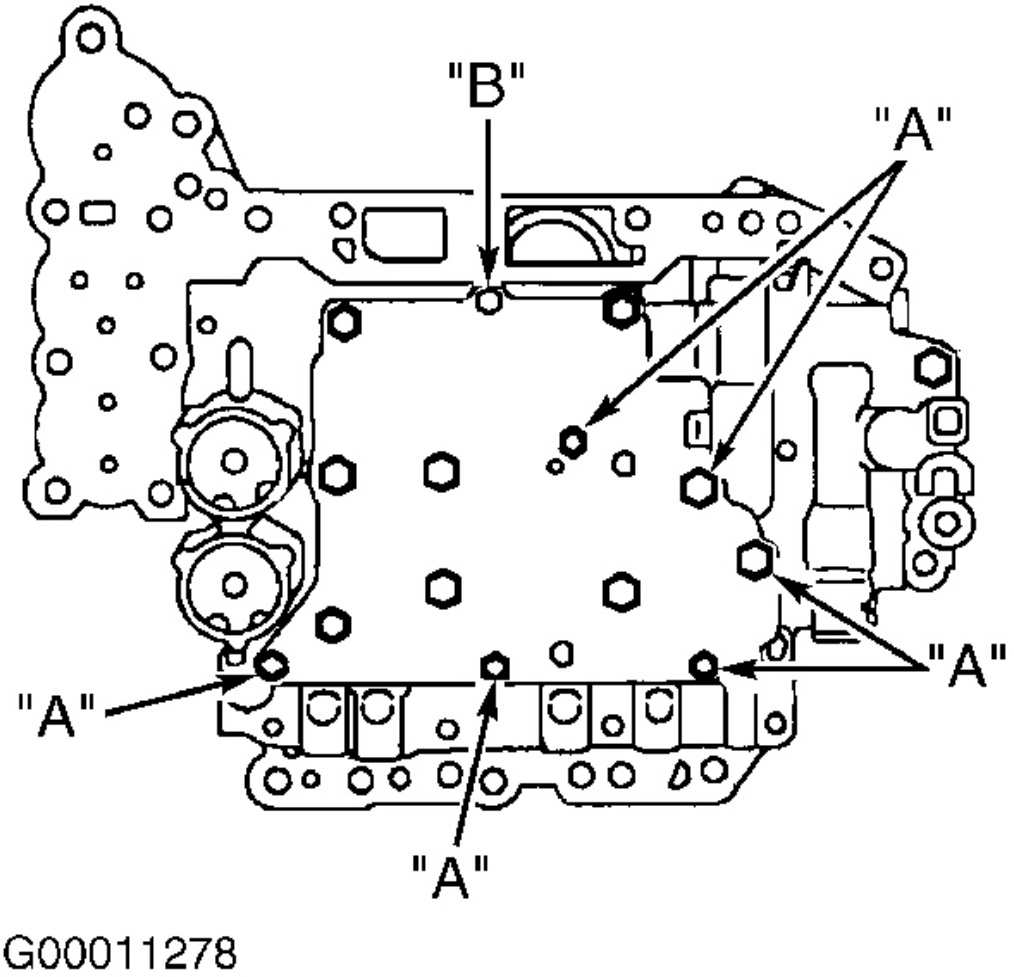

Fig. 51: Removing & Installing Upper Valve Body Cover Bolts
Courtesy of TOYOTA MOTOR SALES, U.S.A., INC.

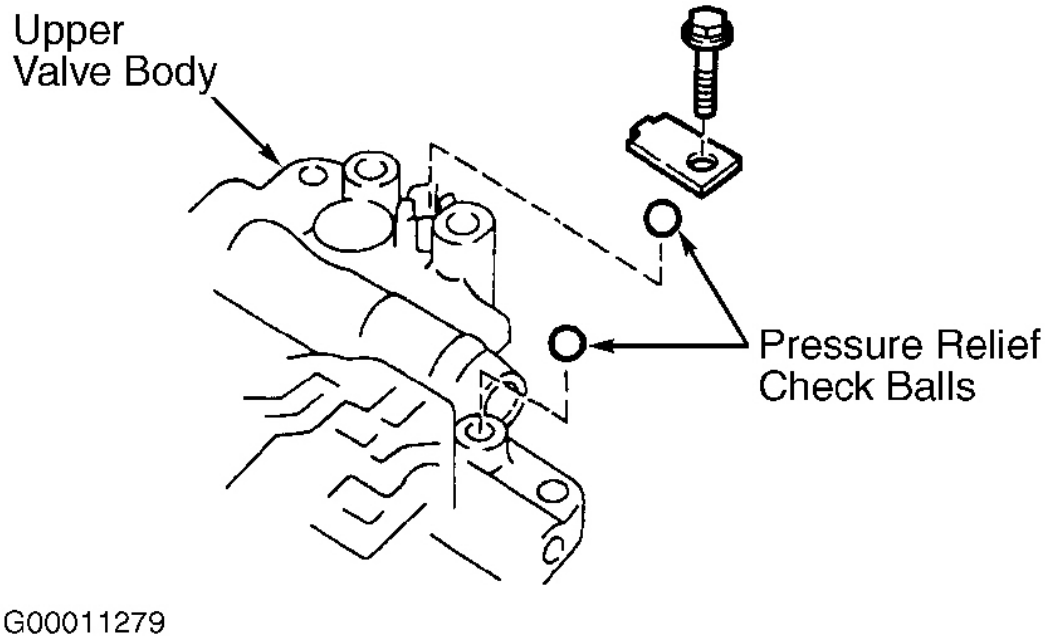

Fig. 52: Locating Pressure Relief Check Balls
Courtesy of TOYOTA MOTOR SALES, U.S.A., INC.

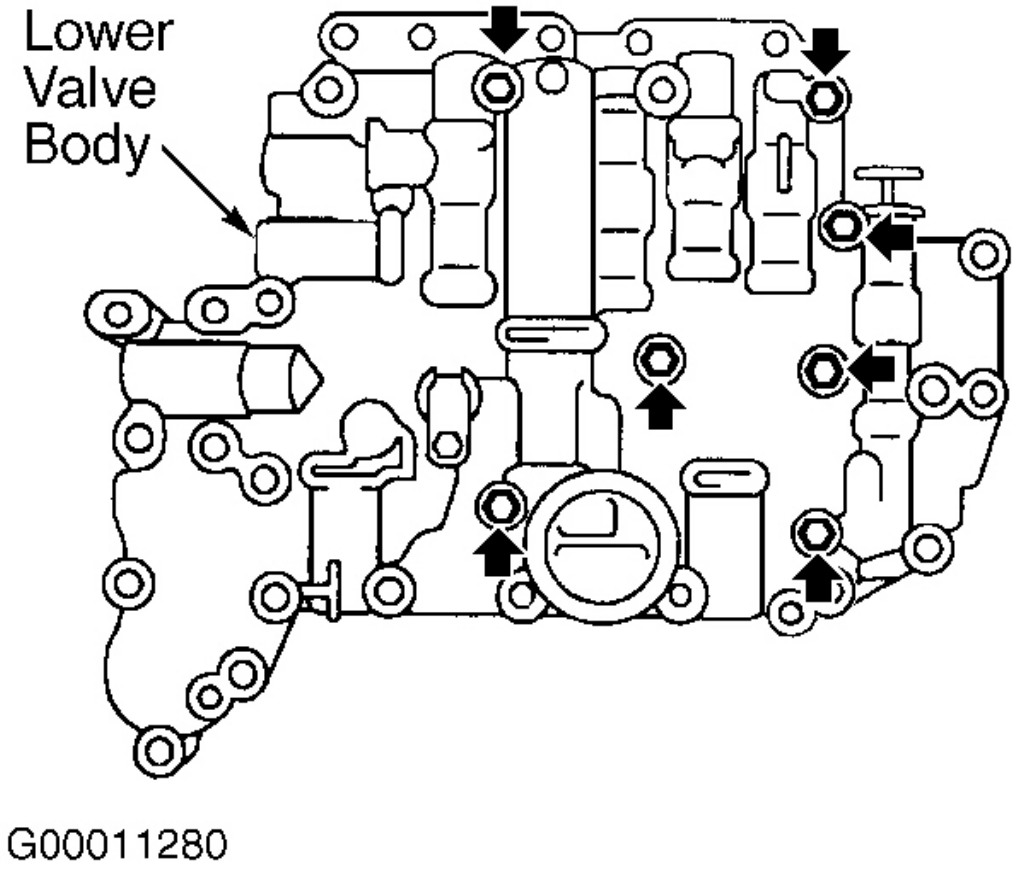

Fig. 53: Removing & Installing 7 Lower Valve Body Bolts
Courtesy of TOYOTA MOTOR SALES, U.S.A., INC.

Inspection

1. Clean all parts with solvent. Dry parts with compressed air. Ensure all valve body oil passages are clear. Inspect valves for scoring or roughness. See **Fig. 54** and **Fig. 55** . Inspect valve springs for damage, squareness, rust and collapsed coils. Measure spring free length and outer diameter.
2. Replace spring if not within specification. See appropriate VALVE BODY SPRING SPECIFICATIONS table. Ensure valve body springs correspond with appropriate valve. Ensure keys are installed in appropriate locations. See appropriate VALVE BODY KEY SPECIFICATIONS table.

VALVE BODY SPRING SPECIFICATIONS (LOWER)

Application (Color) (1)	Outer Diameter - In. (mm)	Free Length - In. (mm)
Direct Clutch (C2) Control Valve (Brown)	.390 (9.90)	1.346 (34.20)

Primary Regulator Valve (Orange)	.783 (19.90)	2.267 (57.58)
1st/Reverse Brake (B2) Control Valve (Pink)	.386 (9.80)	2.247 (57.08)
2nd Brake (B1) Control Valve (Green)	.386 (9.80)	1.912 (48.57)
3-4 Shift Valve (None)	.382 (9.70)	1.152 (29.25)

(1) For spring locations, refer to illustration. See **Fig. 55**.

VALVE BODY SPRING SPECIFICATIONS (UPPER)

Application (Color) (1)	**Outer Diameter - In. (mm)**	**Free Length - In. (mm)**
Clutch Apply Control Valve (Purple)	.354 (9.00)	1.586 (40.29)
Direct Clutch (C2) Exhaust Valve (Orange)	.291 (7.40)	1.585 (40.27)
Direct Clutch (C2) Lock Valve (Yellow)	.291 (7.40)	1.325 (33.66)
Lock-Up Control Valve (None)	.213 (5.40)	.944 (23.98)
Lock-Up Relay Valve (None)	.382 (9.70)	1.152 (29.27)
Secondary Regulator Valve (Blue)	.343 (8.70)	2.298 (58.36)
Solenoid Modulator Valve (Red)	.386 (9.80)	2.457 (62.40)
Underdrive Brake (B3) Orifice Control Valve (Gray)	.307 (7.80)	2.467 (62.65)
2nd Brake (B1) Lock Valve (White)	.386 (9.80)	1.473 (37.42)

(1) For spring locations, refer to illustration. See **Fig. 54**.

VALVE BODY KEY SPECIFICATIONS (LOWER)

Key I.D. Letter (1)	(2) **Height - In. (mm)**
A	1.004 (25.50)
B, C & D	.571 (14.50)

(1) For key locations, refer to illustration. See **Fig. 57**.

(2) Thickness for key "A" is .091" (2.30 mm). Width is not available. For keys "B", "C" and "D", key width is .197" (5.00 mm). Thickness is .126" (3.20 mm).

VALVE BODY KEY SPECIFICATIONS (UPPER)

Key I.D. Letter (1)	(2) **Height - In. (mm)**
A, B & D	.394 (10.00)
F	.728 (18.50)
All Other Keys	.315 (8.00)

(1) For key locations, refer to illustration. See **Fig. 56**.

(2) Thickness for key "F" is .091" (2.30 mm). Width is not available. For all other keys, width is .197" (5.00 mm). Thickness is .126" (3.20 mm).

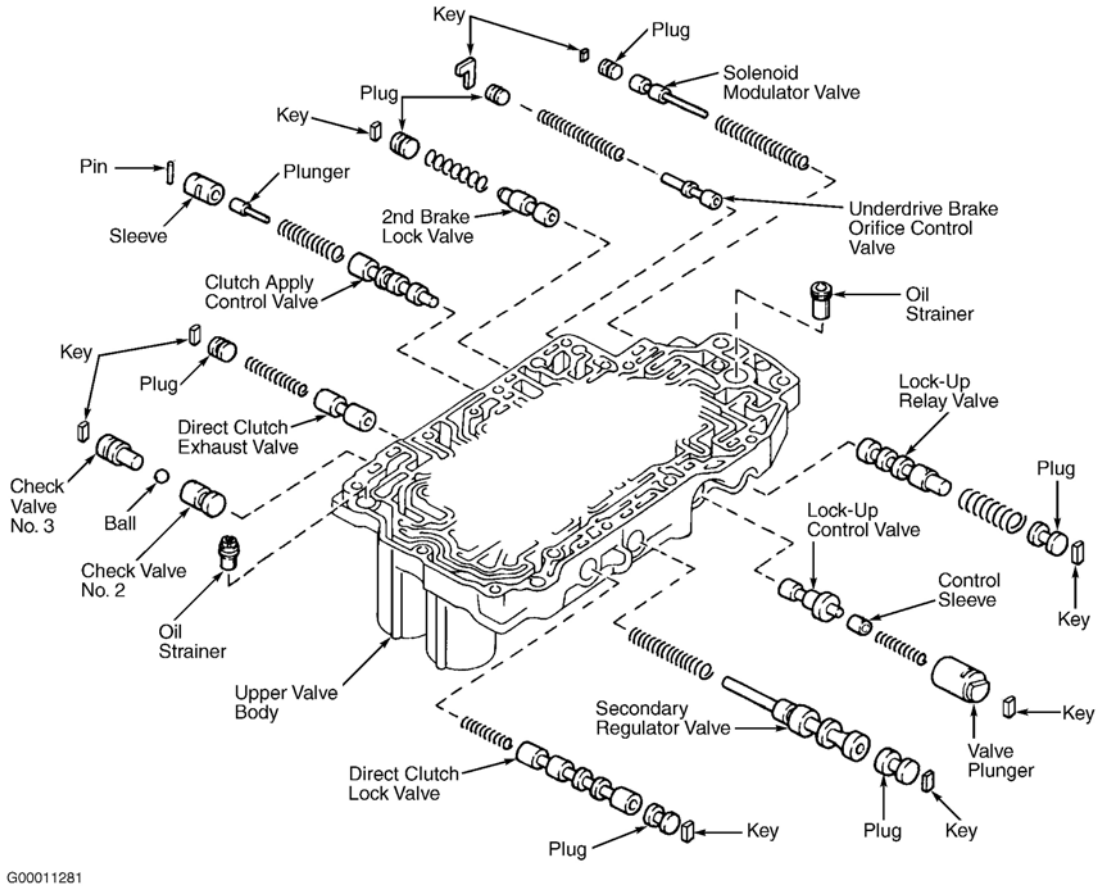

Fig. 54: Exploded View Of Upper Valve Body
Courtesy of TOYOTA MOTOR SALES, U.S.A., INC.

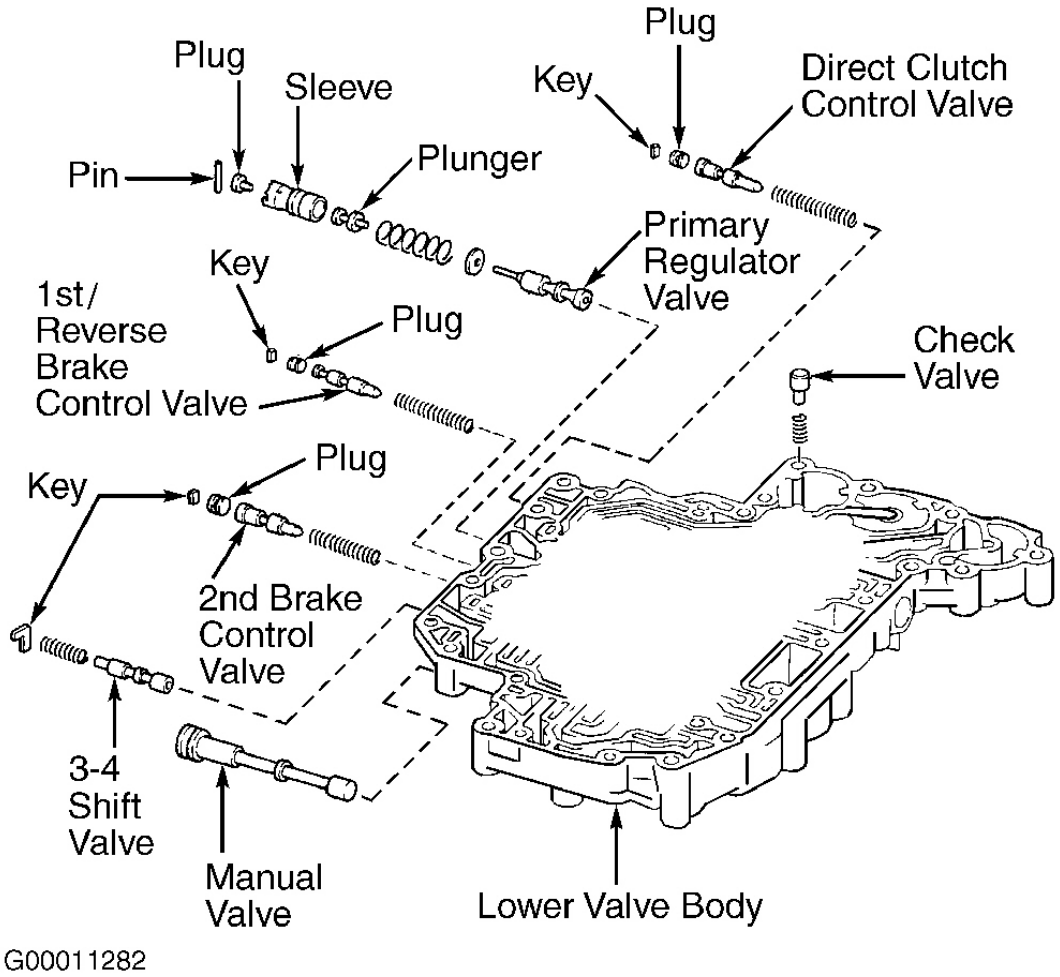

Fig. 55: Exploded View Of Lower Valve Body
Courtesy of TOYOTA MOTOR SALES, U.S.A., INC.

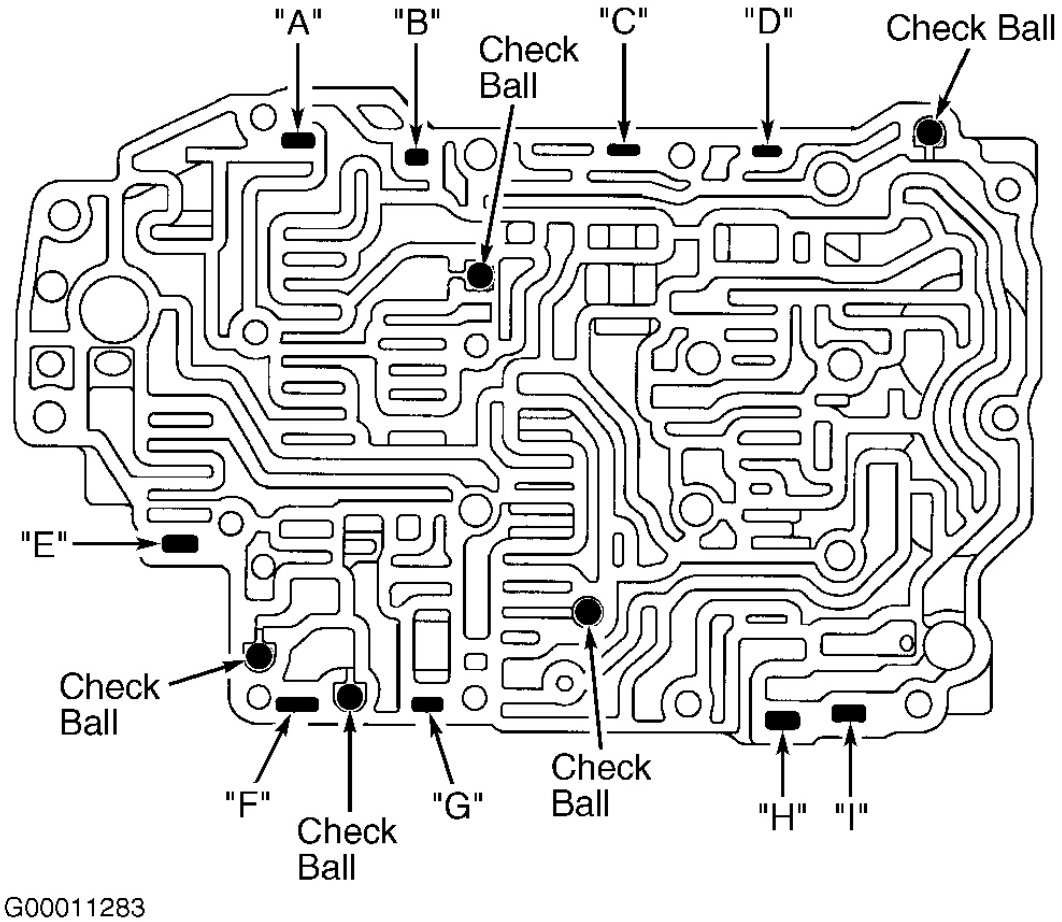

Fig. 56: Identifying Upper Valve Body Check Ball & Key Locations
Courtesy of TOYOTA MOTOR SALES, U.S.A., INC.

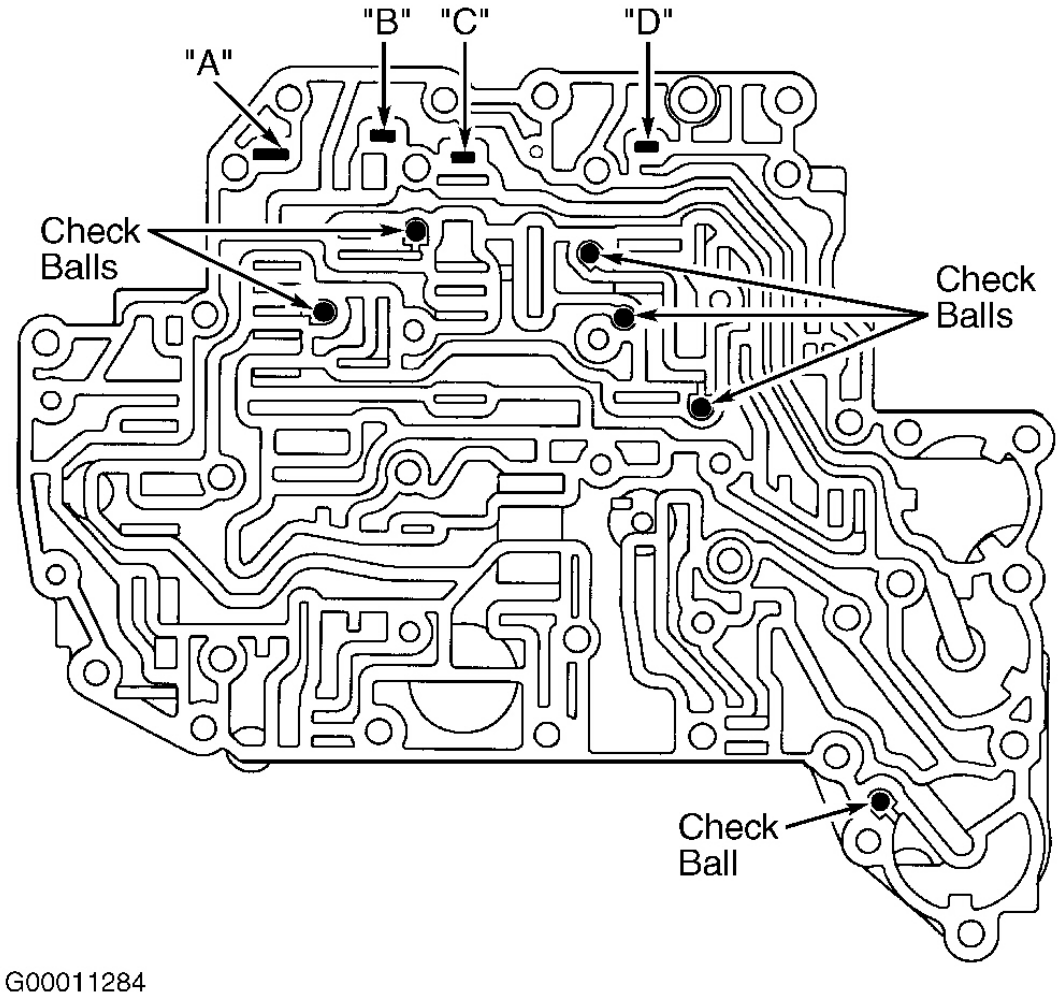

Fig. 57: Identifying Lower Valve Body Check Ball & Key Locations
Courtesy of TOYOTA MOTOR SALES, U.S.A., INC.

Reassembly

1. Install check balls in upper and lower valve bodies. Ensure check balls are installed in correct locations. See **Fig. 56** and **Fig. 57** . Install plate to lower valve body. Install lower valve body with plate to upper valve body. Install 7 lower valve body bolts and tighten to 97 INCH lbs. (11 N.m). Bolts are 1.614" (41.00 mm) in length.
2. Install accumulator pistons, springs, washers and snap rings. Ensure spring free length and outer diameter are within specification. For spring specifications, see **ACCUMULATOR VALVE SPRING SPECIFICATIONS** table. Ensure components are installed in correct locations. Install pressure relief check balls, retainer and bolt. Tighten bolt to 97 INCH lbs. (11 N.m). See **Fig. 52**.
3. Turn valve body over. Install upper valve body cover bolts. Tighten bolts to 58 INCH lbs. (6.6 N.m). Install upper valve body bolts. Tighten bolts to 97 INCH lbs. (11 N.m). Ensure bolts are installed in

correct locations. For bolt identification, see **Fig. 58**.

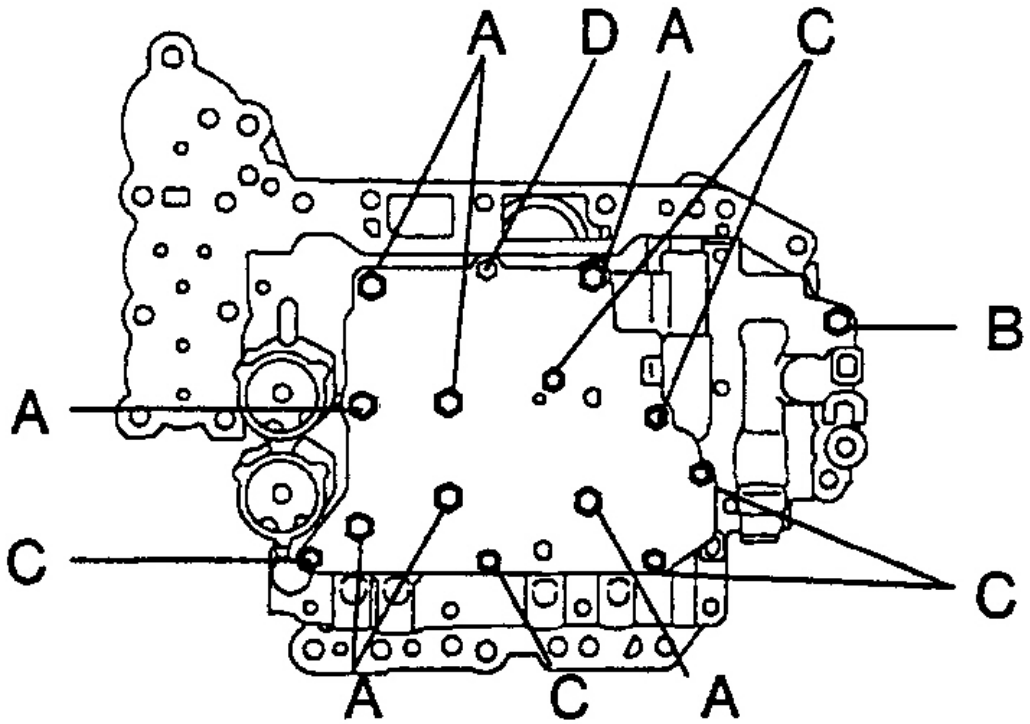

Bolt A: 41 mm (1.614 in.)
Bolt B: 30 mm (1.181 in.)
Bolt C: 15 mm (0.591 in.)
Bolt D: 10 mm (0.394 in.)

G00079140

Fig. 58: Identifying Upper Valve Body Cover Bolts
Courtesy of TOYOTA MOTOR SALES, U.S.A., INC.

4. Install 5 shift solenoids and bolts. Tighten shift solenoid SLT and SL1 bolts to 58 INCH lbs. (6.6 N.m). Bolt length is .47" (12.0 mm). Tighten all other shift solenoid bolts to 97 INCH lbs. (11 N.m). Bolt length is 1.77" (45.0 mm). See **Fig. 49**. Ensure primary regulator valve is installed in correct position. See **Fig. 48**.

ACCUMULATOR VALVE SPRING SPECIFICATIONS

Application (Color)	Free Length - In. (mm)	Outer Diameter - In. (mm)
Direct Clutch Accumulator		
Inner Spring (Brown)	1.873 (47.58)	.441 (11.20)
Outer Spring (Brown)	1.874 (47.61)	.472 (12.00)
2nd Brake Accumulator		
Inner Spring (Purple)	1.728 (43.88)	.433 (11.00)
Outer Spring (White)	1.776 (45.12)	.465 (11.80)

DIFFERENTIAL ASSEMBLY

Disassembly

1. Perform pre-disassembly inspection. Position dial indicator assembly on transaxle case. Position dial indicator tip against side gear. See **Fig. 60**. Measure side gear backlash while holding one pinion gear toward case. Backlash should be .002-.008" (.05-.20 mm). Note and record reading.
2. Mark ring gear and differential case for reassembly reference. Unstake lock plates on ring gear bolts. Remove 4 lock plates and 8 ring gear bolts. Using a plastic hammer, tap on ring gear to remove it from differential case. See **Fig. 59**.
3. Using appropriate puller, remove front and rear tapered roller bearings (if necessary). Using a pin punch and hammer, drive out pinion shaft pin from ring gear side of case. Remove differential pinion shaft from differential case.
4. Remove 2 differential pinion gears, side gears, and 4 thrust washers. Using appropriate puller, remove side gear bearing outer races and shim from transaxle housing and transaxle case. Remove oil seals from transaxle housing and transaxle case.

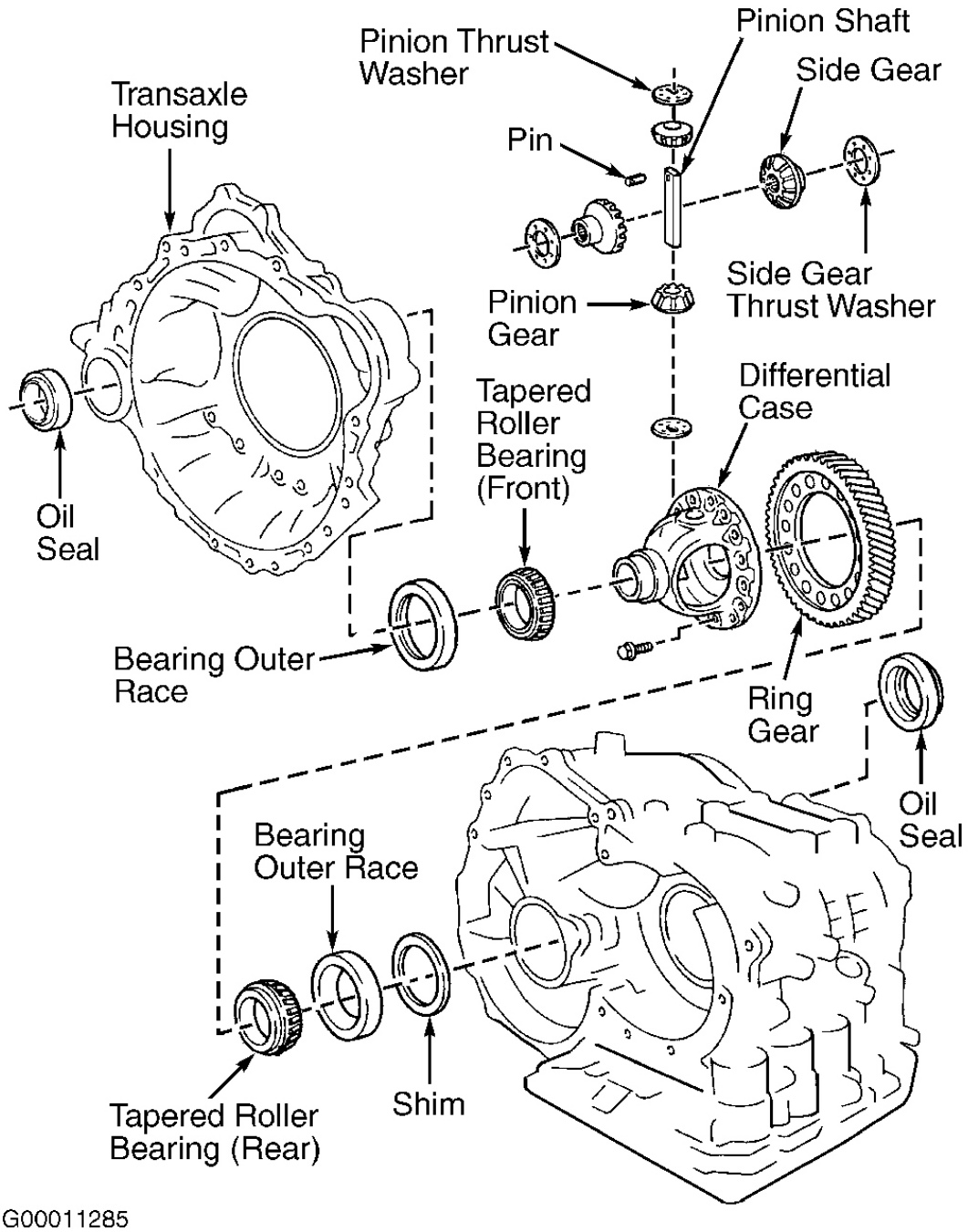

Fig. 59: Exploded View Of Differential Assembly
Courtesy of TOYOTA MOTOR SALES, U.S.A., INC.

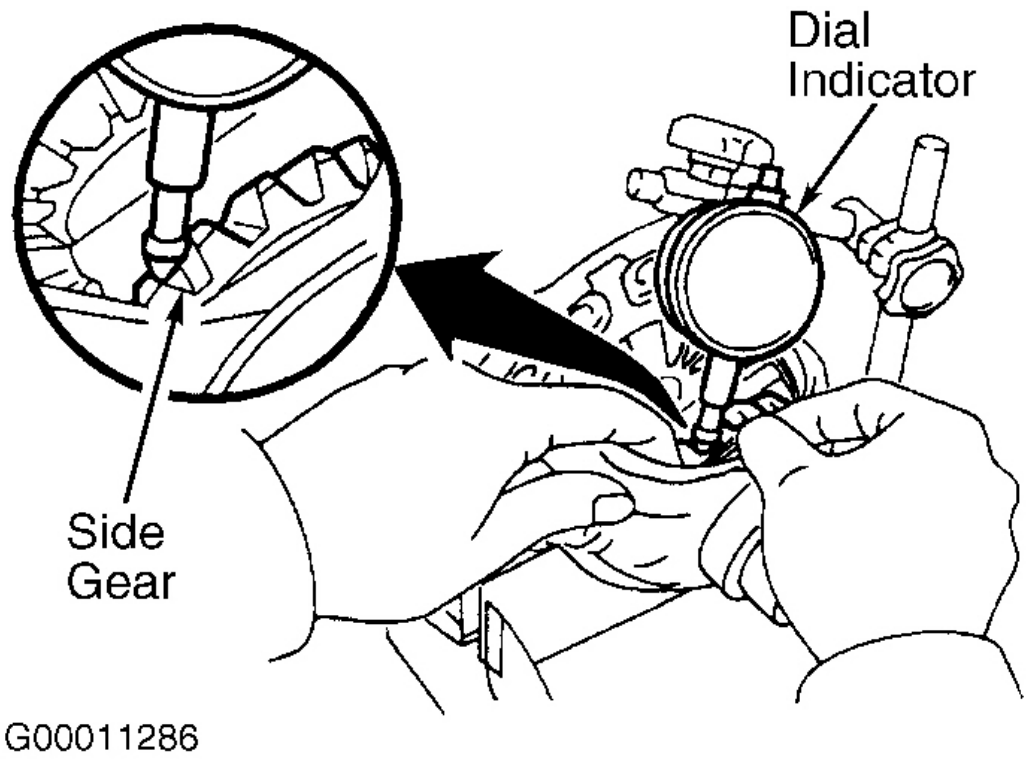

Fig. 60: Measuring Side Gear Backlash
Courtesy of TOYOTA MOTOR SALES, U.S.A., INC.

Cleaning & Inspection

Clean all parts with solvent. Dry with compressed air. Check bearings, races and gears for wear or damage. Replace if necessary.

Reassembly

1. Install original shim (if removed) into transaxle case. Using appropriate race installer and hammer, install outer race into transaxle housing and transaxle case (if removed). Drive outer races in until shim and outer race contact housing or case surface.
2. Coat thrust washers, side gears and pinion gears with ATF. Install 2 thrust washers onto 2 differential side gears. Install 2 thrust washers with 2 side gears, and 2 thrust washers with pinion gears into differential case. Install pinion shaft, aligning lock pin holes on pinion shaft and differential case.
3. Mount differential case in a soft-jawed vise. Using a dial indicator, check side gear backlash. Hold one pinion gear against case. Measure side gear backlash. See **Fig. 60**. Backlash must be .002-.008" (.05-.20 mm). If backlash is not within specification, side gear thrust washers must be replaced.

4. Select thrust washers that will ensure correct side gear backlash. Thrust washers are available in thicknesses of .037-.047" (.95-1.20 mm) in .002" (.05 mm) increments. Install thrust washers and side gears in differential case. If possible, install same size thrust washers on both sides. Install pinion gears and pinion shaft. Check side gear backlash to ensure proper thrust washers are used.
5. Using a pin punch and hammer, drive pinion shaft pin through transaxle case and pinion shaft. Stake differential case. Using appropriate press, install differential case tapered roller bearings.
6. Remove any material from transaxle housing and case mating surfaces. DO NOT allow oil to contact surfaces. Install differential assembly into transaxle case. Install transaxle housing onto transaxle case. Install 16 transaxle housing bolts. Apply thread sealant to 5 lower bolts inside torque converter housing, and tighten these bolts to 16 ft. lbs. (22 N.m) within 10 minutes of installation. Tighten all other bolts to 22 ft. lbs. (29 N.m). Ensure bolts are in correct locations. Longest bolts go inside torque converter housing. See **Fig. 16**.
7. Using appropriate adapter and ratchet, rotate differential assembly in both directions to seat bearings. Using an INCH-lb. torque wrench, measure differential side bearing preload. See **Fig. 61**. Preload should be 9.0-14.0 INCH lbs. (1.0-1.6 N.m) for NEW bearings and 4.4-7.1 INCH lbs. (.5-.8 N.m) for used bearings.
8. If preload is not within specification, remove 16 transaxle housing bolts. Using a plastic hammer, remove transaxle housing from transaxle case. Remove differential assembly from transaxle case and replace shim at rear tapered roller bearing with appropriate shim.
9. Adjustment shims are marked in numeric and alphabetic order and available in thicknesses from .114 (2.90 mm), marked with a zero, to .132" (3.35 mm), marked with the number "9", and from .134" (3.40 mm), marked with the letter "A", to .150" (3.80 mm), marked with the letter "H". Shims increase in increments of .002" (.05 mm). Recheck preload after shim replacement.
10. Clean contact surface of differential case and ring gear using cleaning solvent. Heat ring gear to 212°F (100°C) in water. DO NOT heat ring gear above 230°F (110°C).
11. After moisture on ring gear has completely evaporated, quickly align match marks made during disassembly. Install ring gear on differential case. Install lock plates and ring gear bolts and tighten to 71 ft. lbs. (96 N.m). Install NEW oil seals in transaxle housing and transaxle case. Coat lip of oil seals with lubricant. Ensure transaxle case oil seal depth is .087-.126" (2.20-3.20 mm) from case lip.

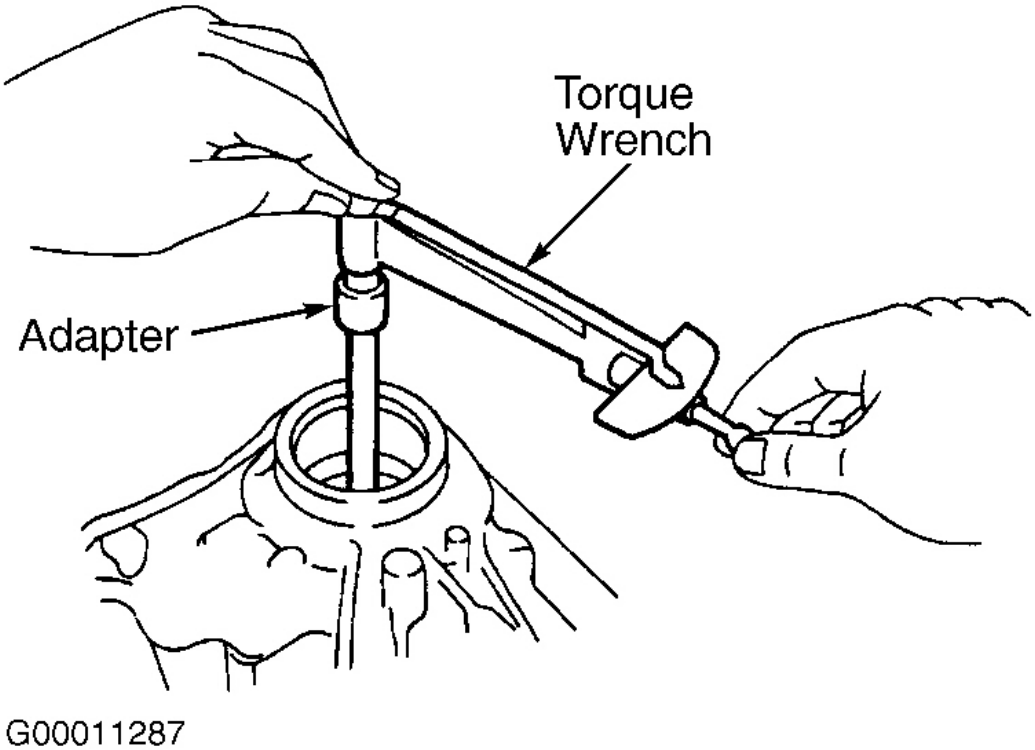

Fig. 61: Measuring Side Bearing Preload
Courtesy of TOYOTA MOTOR SALES, U.S.A., INC.

TRANSAXLE REASSEMBLY

NOTE: **Coat all oil seal rings, clutch discs, clutch plates, rotating parts and sliding surfaces with ATF prior to reassembly. All gaskets and rubber "O" rings should be replaced. Ensure ends of snap rings are not aligned with cutouts of drum. Check thrust bearings and races for wear or damage. Use petroleum jelly to secure parts in place. Clutch discs should be soaked in ATF for at least 15 minutes before installation.**

NOTE: **For thrust bearing and race locations, refer to illustration. See Fig. 80. For component dimensions, see THRUST BEARING & RACE SPECIFICATIONS table.**

1. Install oil deflector with 3 bolts to transaxle housing (U240E). Install apply pipe and clamp. See **Fig. 17**. Install bolt and tighten to 87 INCH lbs. (9.8 N.m). Ensure pipe is installed to stopper. Install oil seal ring to transaxle housing. See **Fig. 30**. Using appropriate adapter and press, install underdrive cylindrical roller

bearing into transaxle housing. DO NOT apply excessive pressure to bearing.

2. Using vernier calipers, measure underdrive brake piston return spring free length with spring mounted to spring seat. Free length should be .521" (13.24 mm) on U240E models or .553" (14.04 mm) on U241E models. Replace springs as necessary. Install 2 oil seal rings to transaxle case.
3. For needle roller bearing installation, wrap vinyl tape around bearing installer at a position .157" (4.00 mm) above bottom end of installer, until thickness of tape is about .197" (5.00 mm). Using bearing installer and press, install needle roller bearing to transaxle case until wound vinyl tape contacts transaxle case.
4. Coat 2 NEW "O" rings with ATF and install on underdrive brake piston. See **Fig. 18**. Using hand pressure, install piston into transaxle case. Using appropriate adapter and press, compress underdrive brake piston return springs into transaxle case and install snap ring. DO NOT apply excessive force.
5. Install snap ring into transaxle case. Using appropriate bearing race adapter and press, install 2 bearing outer races into transaxle case. Press each outer race into transaxle case until race contacts snap ring. Using appropriate adapter and press, install tapered roller bearing to counter drive gear until bearing contacts gear. DO NOT apply excessive force.
6. Using appropriate adapter and press, install counter drive gear and bearing into transaxle case. DO NOT apply excessive pressure. Using vernier calipers, measure 1st/reverse brake piston return spring free length with spring mounted to spring seat. Free length should be .693" (17.61 mm). Replace springs as necessary.

NOTE: In the following step, stop press when piston return spring seat is lowered .039-.079" (1.00-2.00 mm) from snap ring groove. This prevents spring seat from becoming deformed. DO NOT expand snap ring excessively.

7. Coat 2 NEW "O" rings with ATF and install on 1st/reverse brake piston. Using hand pressure, install piston into transaxle case. See **Fig. 19**. Using appropriate adapter and press, compress 1st/reverse brake piston return springs into transaxle case and install snap ring. DO NOT apply excessive force.
8. Install front planetary ring gear and snap ring to brake hub. Install front planetary gear to brake hub. Using appropriate adapter and press, install brake hub with front planetary gear into transaxle case. See **Fig. 62**. Install washer on counter drive gear in correct direction. See **Fig. 63**.
9. Using holding tool, socket and torque wrench, install nut and tighten to 207 ft. lbs. (280 N.m). Using socket, adapter and INCH-lb. torque wrench, measure counter drive gear tapered roller bearing starting torque. Starting torque should be 4.4-9.0 INCH lbs. (.5-1.0 N.m). See **Fig. 64**. If starting torque is not within specification, gradually tighten nut until starting torque is within specification. Stake lock washer to nut.
10. Install 2 thrust bearings, bearing race and front planetary sun gear to front planetary gear. Coat bearing race with ATF and install race to rear planetary gear. Install thrust washer No. 2. Install rear planetary gear into transaxle case. Install snap ring.

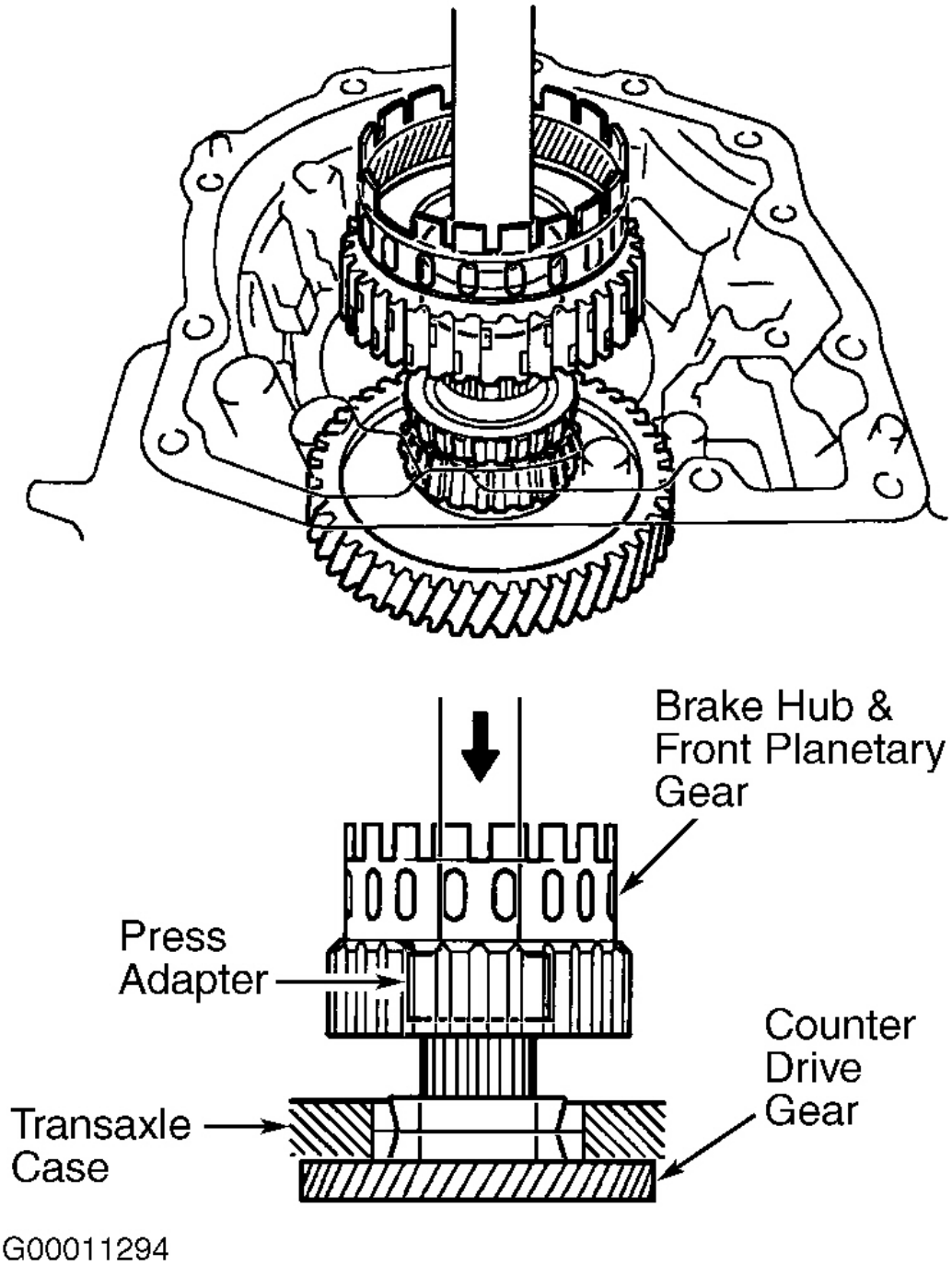

Fig. 62: Installing Front Planetary Gear With Brake Hub Into Transaxle Case
Courtesy of TOYOTA MOTOR SALES, U.S.A., INC.

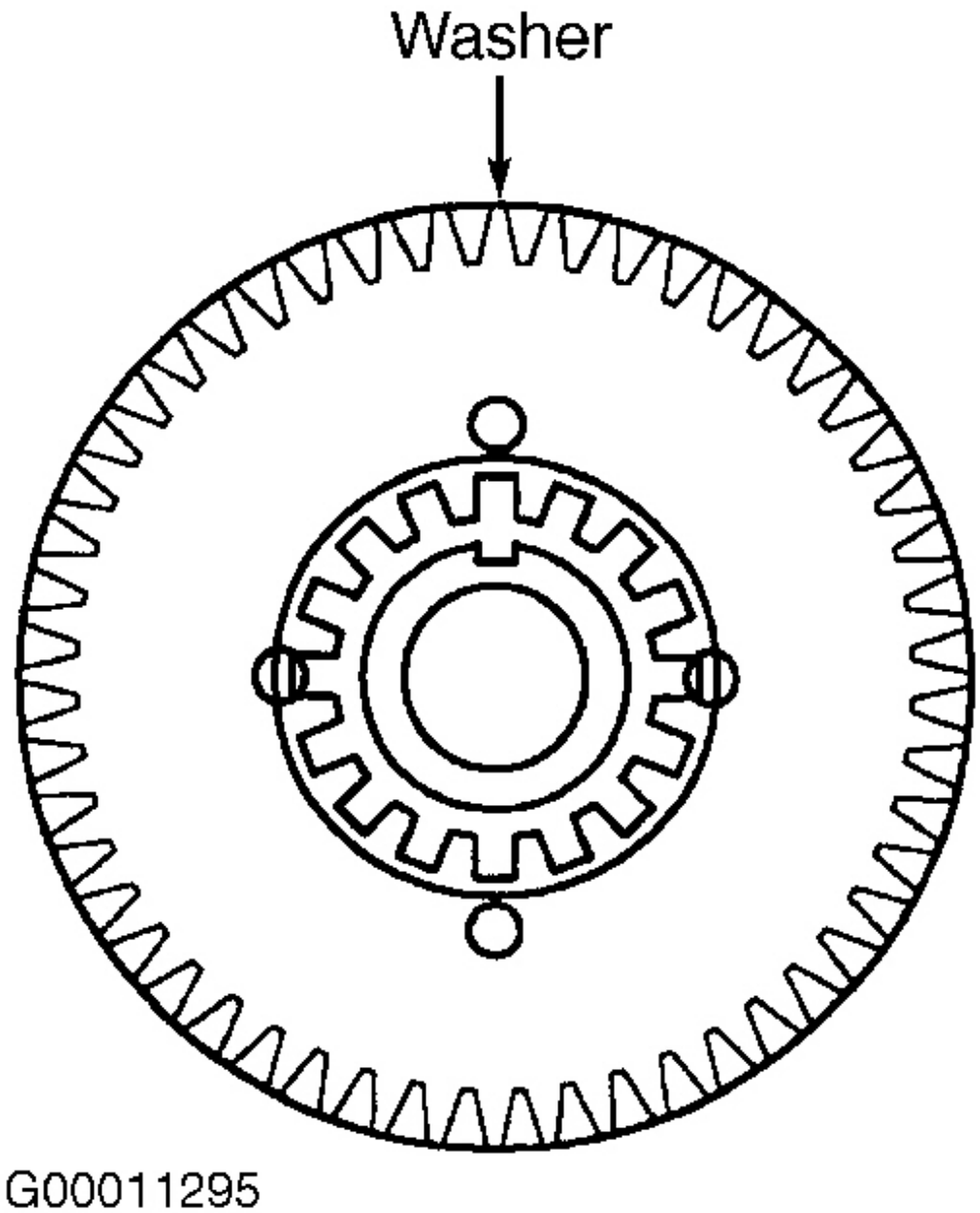

Fig. 63: Installing Counter Drive Gear Washer
Courtesy of TOYOTA MOTOR SALES, U.S.A., INC.

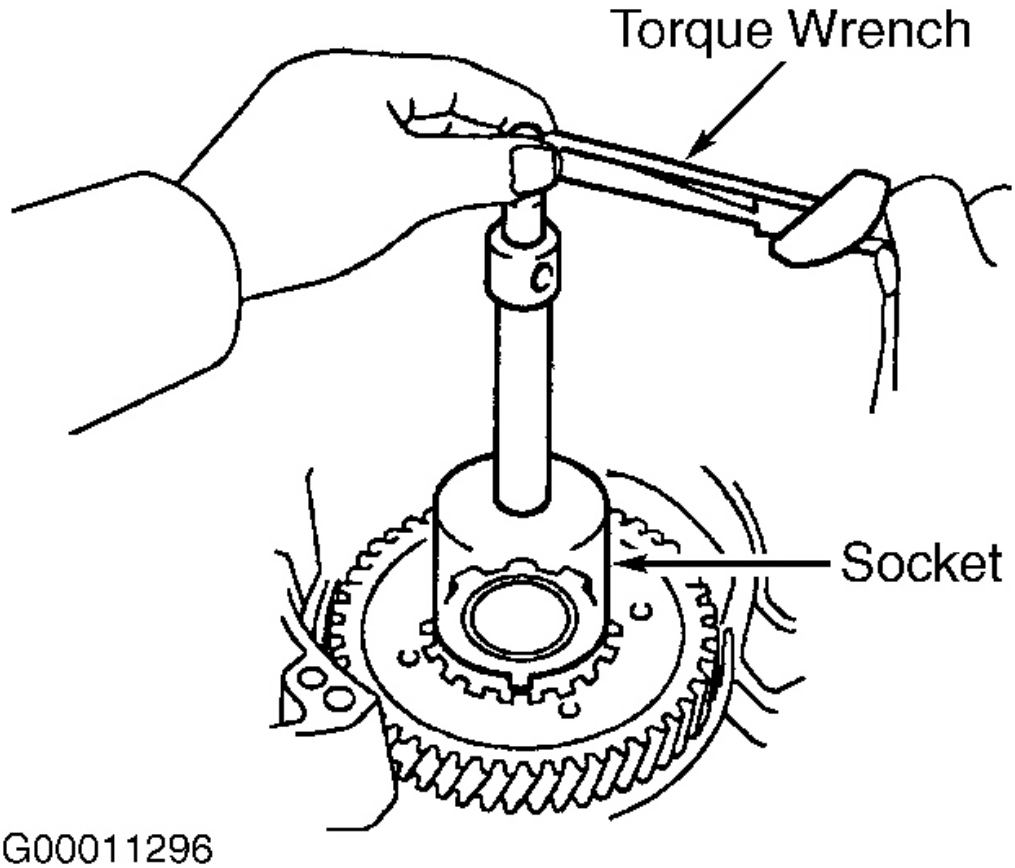

Fig. 64: Measuring Counter Drive Gear Bearing Starting Torque
Courtesy of TOYOTA MOTOR SALES, U.S.A., INC.

11. Install 1st/reverse brake. Install 5 plates and 5 discs, starting with a plate and alternating with a disc. DO NOT install flange. Measure 1st/reverse brake piston stroke. Using vernier calipers, measure distance between disc surface and contact surface of 2nd brake assembly at transaxle case. See **Fig. 65**.
12. Piston stroke should be .040-.047" (1.02-1.21 mm). Select appropriate flange to ensure piston stroke is within specification. Flanges are marked in numeric order and are available in thicknesses from .071" (1.80 mm), marked with the number "1", to .098" (2.50 mm), marked with the number "8", in increments of .004" (.10 mm). Recheck piston stroke after flange is installed.

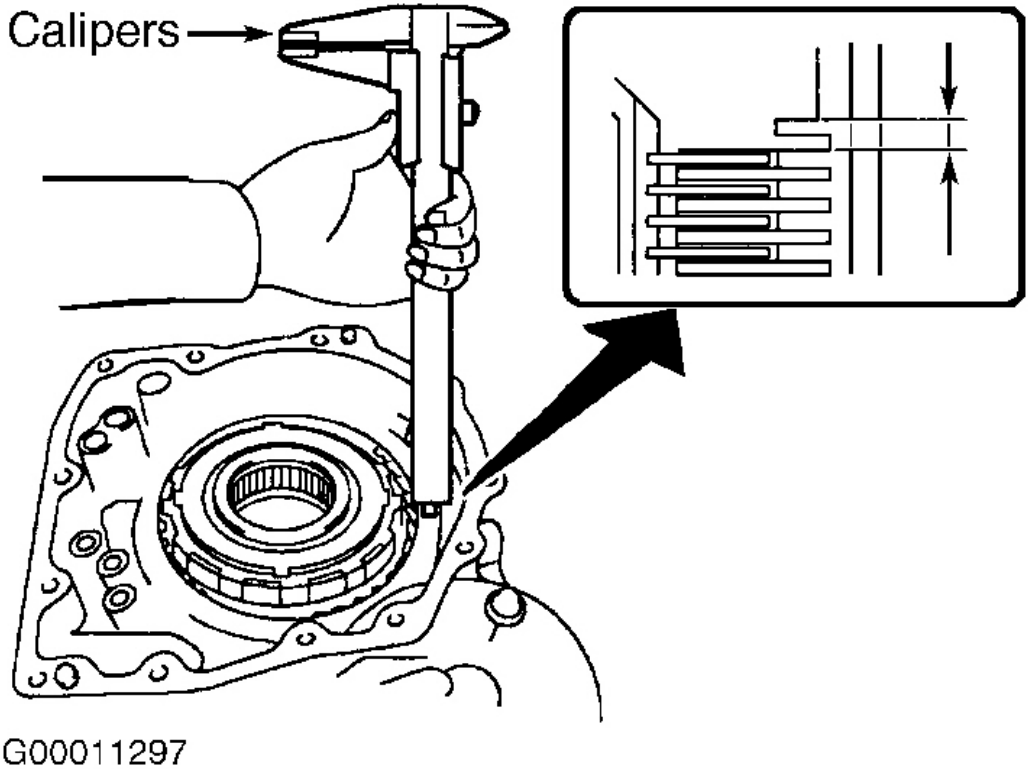

Fig. 65: Measuring 1st/Reverse Brake Piston Stroke
Courtesy of TOYOTA MOTOR SALES, U.S.A., INC.

13. Install 2nd brake cylinder assembly into transaxle case. See **Fig. 19**. Install snap ring and measure inside diameter. Snap ring inside diameter should be more than 6.57" (167.0 mm). Snap ring has a specific tapered installation direction. If inside diameter is not within specification, ensure snap ring is installed in correct direction. If snap ring is installed correctly, replace snap ring.
14. Install one-way clutch outer sleeve to 2nd brake cylinder assembly. Ensure sleeve is positioned correctly. Install one-way clutch inner race to No. 1 one-way clutch. Ensure inner race is installed correctly. Check No. 1 one-way clutch operating direction. One-way clutch should rotate in counterclockwise direction and lock in clockwise direction. See **Fig. 66**.

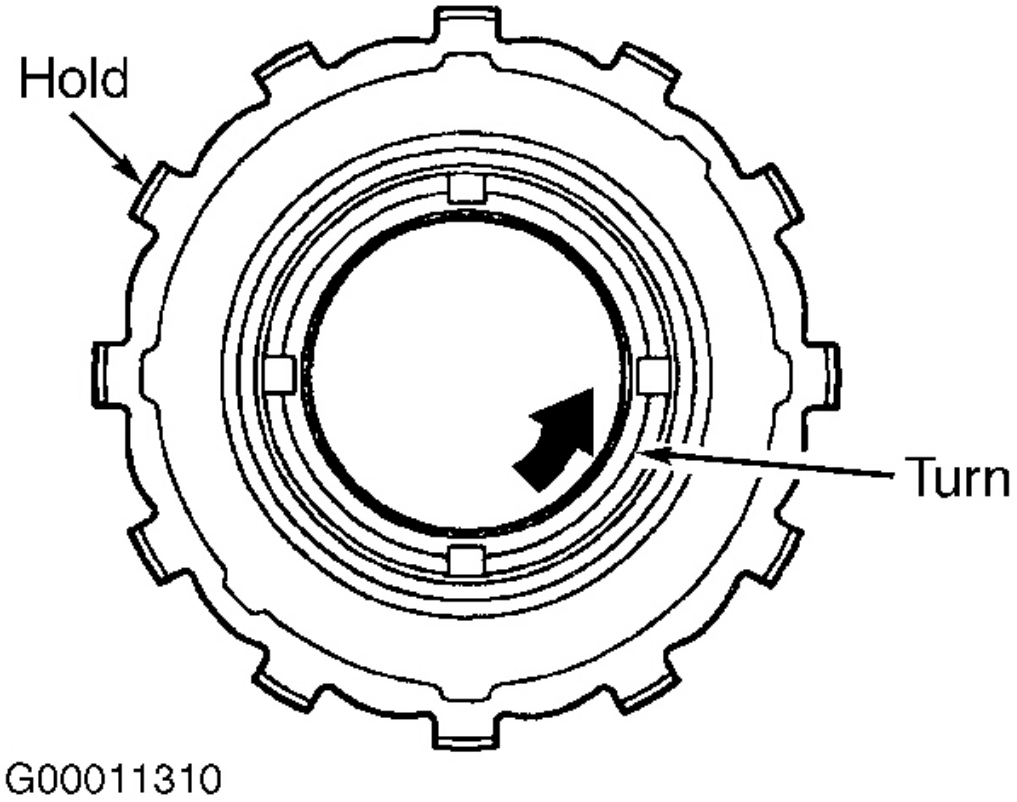

Fig. 66: Checking No. 1 One-Way Clutch Rotation
Courtesy of TOYOTA MOTOR SALES, U.S.A., INC.

15. Install No. 1 one-way clutch and thrust bearing into outer sleeve. Ensure non-colored (natural) race on thrust bearing is visible upon installation. See **Fig. 67**. Coat thrust washer No. 1 with petroleum jelly and install on rear planetary sun gear. Coat thrust bearing with petroleum jelly and install on rear planetary sun gear. Install rear planetary sun gear onto rear planetary gear.

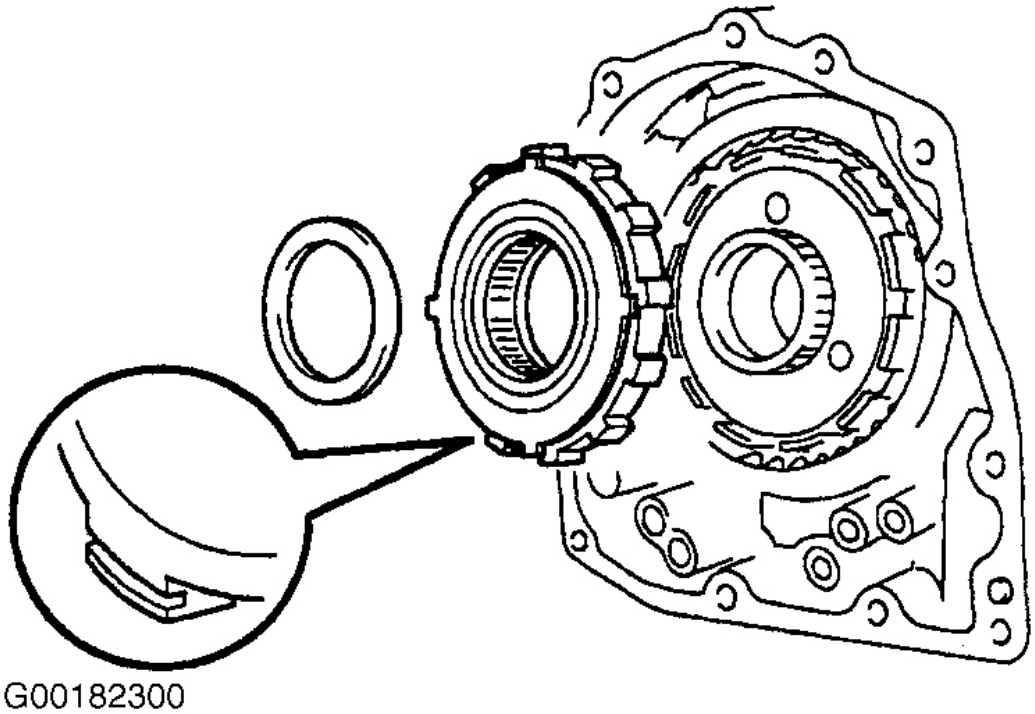

Fig. 67: Installing No. 1 One-Way Clutch
Courtesy of TOYOTA MOTOR SALES, U.S.A., INC.

16. Install 2nd brake. Install 4 discs and 4 plates (U240E), (3 discs and 3 plates on U241E), starting with a plate and alternating with a disc. DO NOT install flange at this time. Temporarily install snap ring. Using vernier calipers, measure 2nd brake piston stroke between disc surface and snap ring surface. See **Fig. 68**. Piston stroke should be .024-.029" (.62-.74 mm) on U240E models. Piston stroke should be .024-.036" (.62-.91 mm) on U241E models.

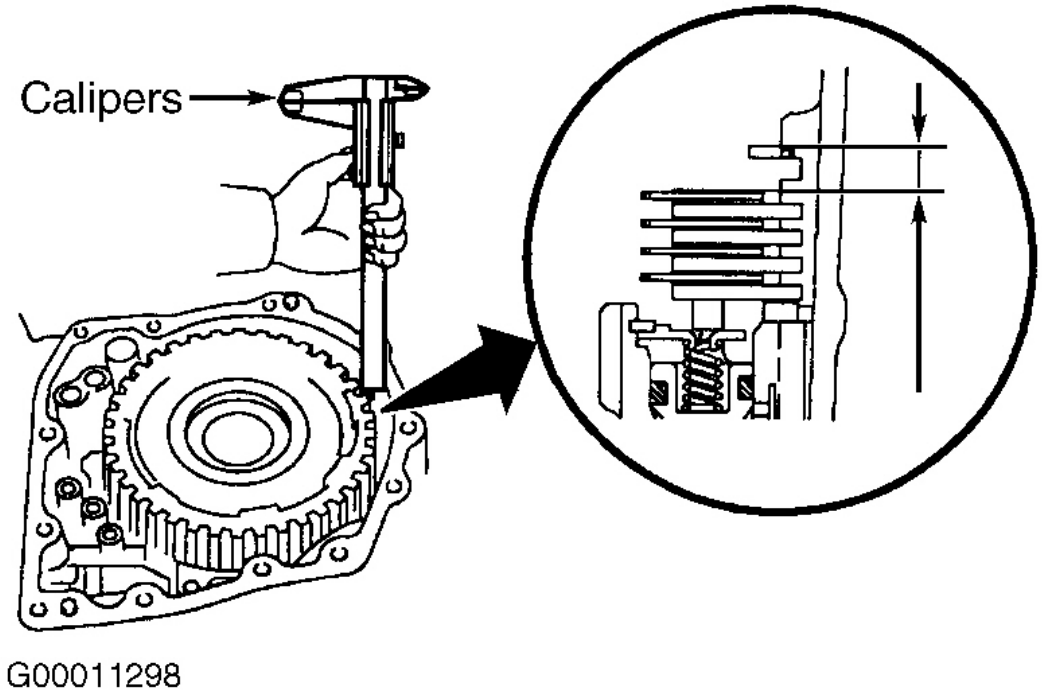

Fig. 68: Measuring 2nd Brake Piston Stroke
Courtesy of TOYOTA MOTOR SALES, U.S.A., INC.

17. Select appropriate flange to ensure piston stroke is within specification. Use the following formula to determine flange thickness: measured distance, minus flange thickness, minus snap ring thickness of .063" (1.60 mm). Flanges are available in thicknesses from .118" (3.00 mm) to .142" (3.60 mm) in increments of .004" (.10 mm), and are marked in numeric order from "1" to "7". Remove snap ring, install appropriate flange and reinstall snap ring. Ensure snap ring end gap is visible through groove in transaxle case.
18. Install bearing race over shaft and onto direct clutch. Install direct clutch assembly and thrust bearing onto rear planetary sun gear assembly. See **Fig. 20**. Ensure discs in direct clutch completely mate with rear planetary sun gear to ensure rear cover can be installed correctly.
19. Ensure transaxle case and rear cover mating surfaces are clean. Place a straightedge onto direct clutch drum. Using vernier calipers, measure distance between bottom of straightedge and transaxle case (dimension "B"). See **Fig. 69**.

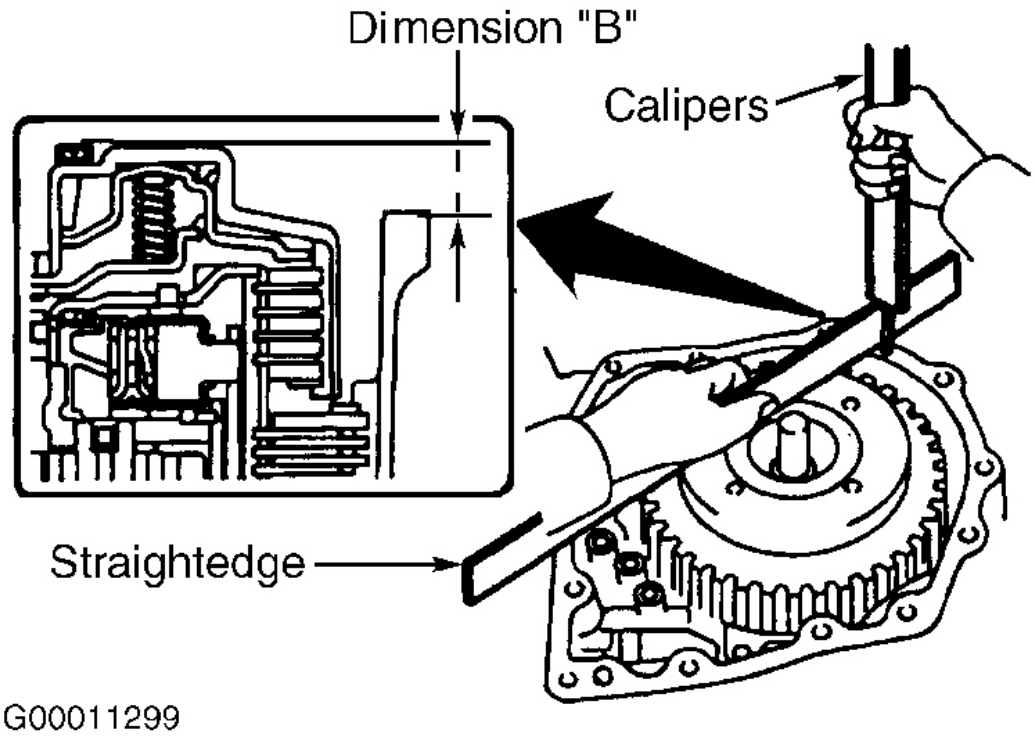

Fig. 69: Measuring Direct Clutch End Play (Dimension "B")
Courtesy of TOYOTA MOTOR SALES, U.S.A., INC.

20. Measure dimension No. 1 and dimension No. 2 of rear cover in 2 places. See **Fig. 70**. Subtract dimension No. 2 from dimension No. 1. This total equals dimension "C". Calculate direct clutch end play by subtracting dimension "B" from dimension "C". End play should be .008-.037" (.20-.94 mm).
21. Select a thrust bearing to ensure end play is within specification. Thrust bearings are available in 2 thicknesses of .140" (3.55 mm) with an outside diameter of 2.74" (69.6 mm), and .152" (3.85 mm) with an outside diameter of 2.76" (70.18 mm). Inside diameter of both thrust bearings is 2.11" (53.6 mm). During installation, ensure Black race side of thrust bearing is facing transaxle rear cover.

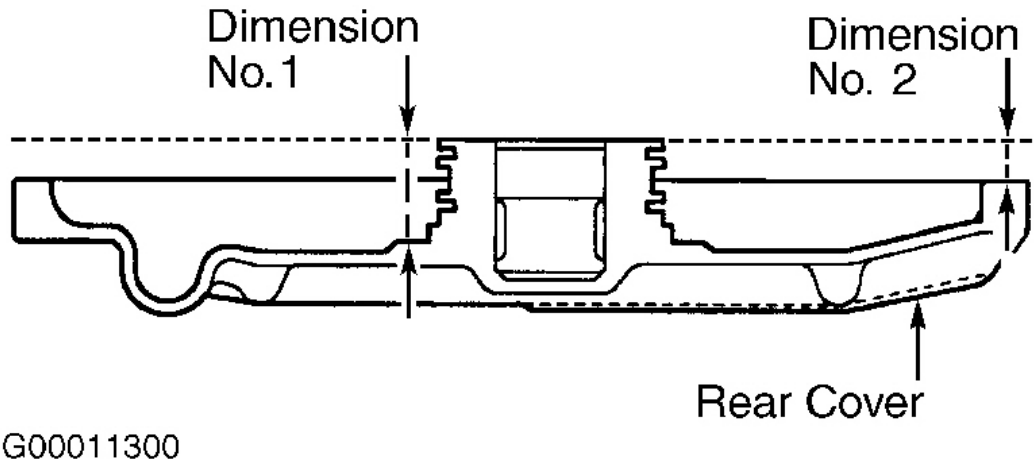

Fig. 70: Measuring Distance Between Rear Cover Surfaces (Dimensions No. 1 & No. 2)
Courtesy of TOYOTA MOTOR SALES, U.S.A., INC.

22. Install 2 NEW apply gaskets to transaxle case. Install clamp to apply pipes prior to installing pipes to transaxle case. This will prevent apply pipes from being deformed or damaged. Install 2 apply pipes, clamp and bolt. See **Fig. 17**. Ensure pipes are securely inserted into transaxle case until they reach the pipe stopper on pipe. Tighten bolt to 48 INCH lbs. (5.4 N.m).
23. Install needle roller bearing onto transaxle rear cover with inscribed mark on bearing facing up. Using appropriate adapter and press, install needle roller bearing to transaxle rear cover. Press bearing in to a depth of .474-.502" (12.05-12.75 mm). Coat 2 oil seal rings with ATF and install on transaxle rear cover. See **Fig. 20**.
24. Ensure transaxle case and rear cover surfaces are clean. DO NOT allow oil to contact surfaces. Coat needle roller bearing with ATF. Apply Three Bond (1281) or equivalent gasket sealant to rear cover around inside edges of bolt holes. Install rear cover onto transaxle case. Install 11 bolts and tighten all bolts except bolt at 5 o'clock position to 18 ft. lbs. (24 N.m). Tighten bolt at 5 o'clock position to 14 ft. lbs. (19 N.m).
25. Install underdrive brake. Install 3 discs and 3 plates, starting with a plate and alternating with a disc. DO NOT install flange at this time. Temporarily install snap ring. Using a dial indicator, measure underdrive brake piston stroke by applying and releasing 57 psi (4 kg/cm_2) of compressed air to transaxle case. See **Fig. 71**.
26. Piston stroke should be .071-.087" (1.81-2.20 mm). Select appropriate flange to ensure piston stroke is within specification. Flanges are available in 3 thicknesses of .118" (3.00 mm), .126" (3.20 mm) and .134" (3.40 mm), and are marked in numeric order from "1" to "3". Remove snap ring, install appropriate flange and reinstall snap ring.

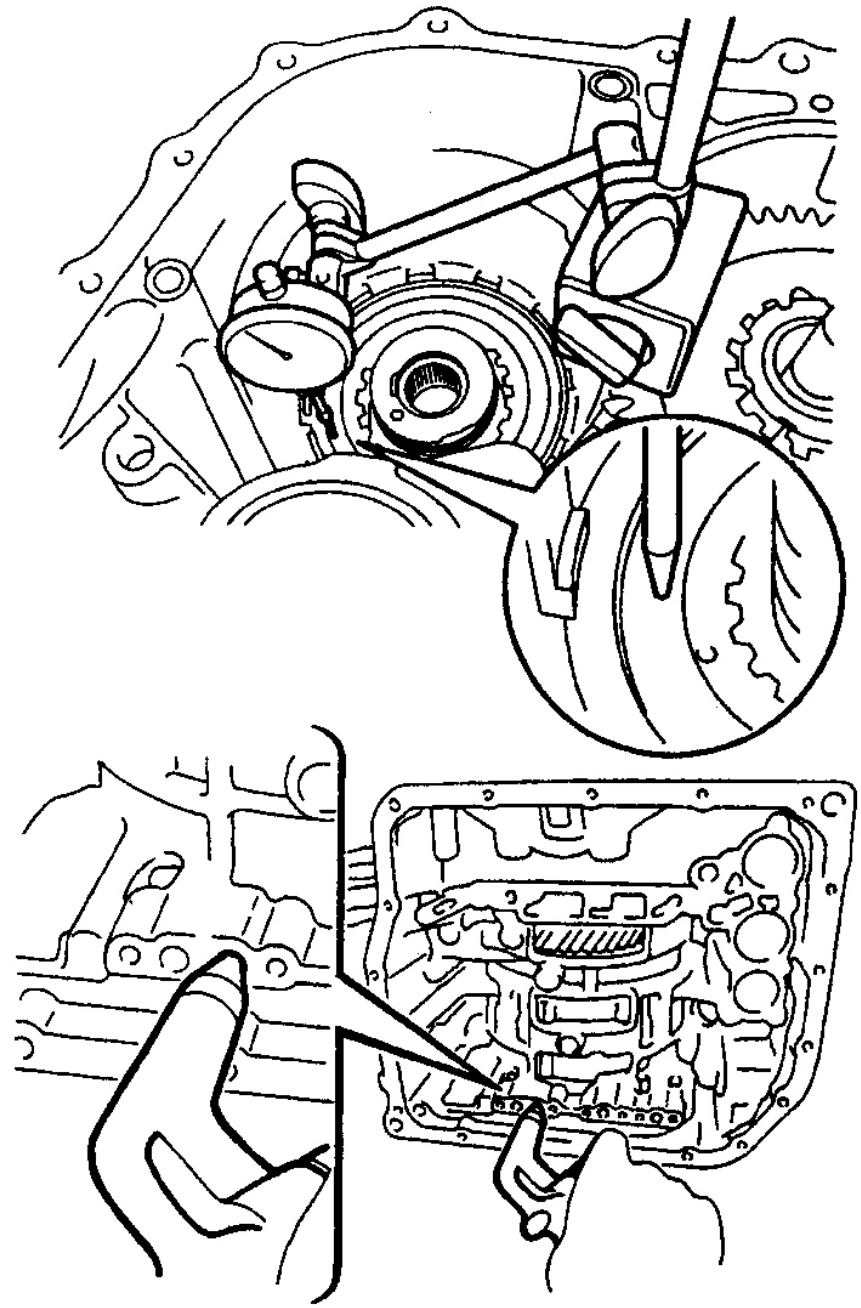

Fig. 71: Measuring Underdrive Brake Piston Stroke
Courtesy of TOYOTA MOTOR SALES, U.S.A., INC.

27. Install outer race retainer to No. 2 one-way clutch, ensuring long finger of retainer is facing up. See **Fig.**

25. Install underdrive clutch to No. 2 one-way clutch. Rotate underdrive clutch to ensure correct installation. Underdrive clutch should rotate in a counterclockwise direction, and lock in a clockwise direction. See **Fig. 72**.

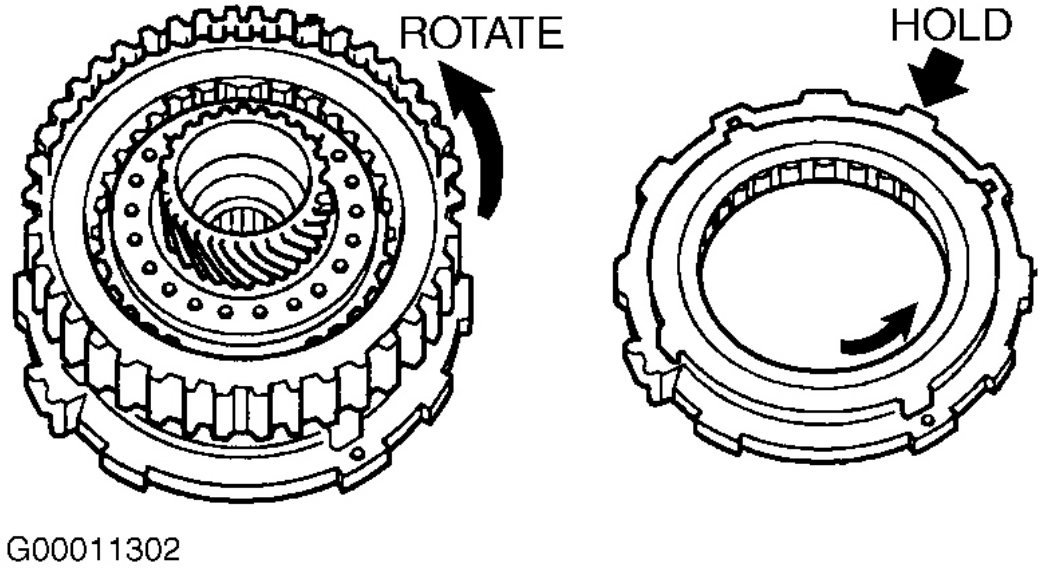

Fig. 72: Checking Underdrive Clutch Assembly Rotation
Courtesy of TOYOTA MOTOR SALES, U.S.A., INC.

28. Install No. 2 one-way clutch into transaxle case. Note position of index marks on No. 2 one-way clutch. Ensure marks are facing up. See **Fig. 73**. Install snap ring into transaxle case. Coat thrust bearing and bearing race with petroleum jelly and install onto underdrive clutch. Install underdrive clutch into transaxle case.

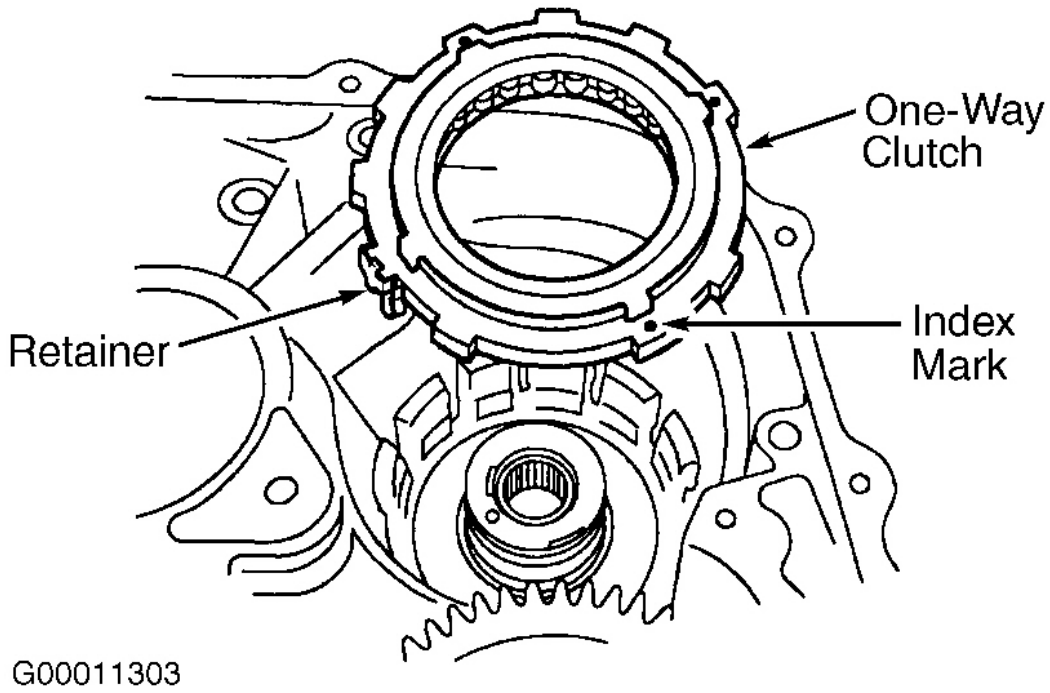

Fig. 73: Installing No. 2 One-Way Clutch & Retainer
Courtesy of TOYOTA MOTOR SALES, U.S.A., INC.

29. Install pawl pin and spring to parking lock pawl. Temporarily install parking lock pawl, shaft and spring to transaxle case. See **Fig. 17**. Install underdrive planetary gear assembly into transaxle case. Engage all clutch discs and hub spline of planetary gear assembly firmly and securely. Install parking lock pawl shaft. Install lock pawl clamp and bolt. Tighten bolt to 87 INCH lbs. (9.8 N.m).
30. Using vernier calipers and a straightedge, measure gap between top of differential drive pinion in underdrive planetary gear, and contact surface of transaxle case. See **Fig. 74**. Record measurement as dimension "D".
31. Measure dimension No. 1 and dimension No. 2 of transaxle housing in 2 places. See **Fig. 75**. Subtract dimension No. 2 from dimension No. 1. Record measurement as dimension "E". Install bearing race onto counter drive gear in correct direction. See **Fig. 18**.

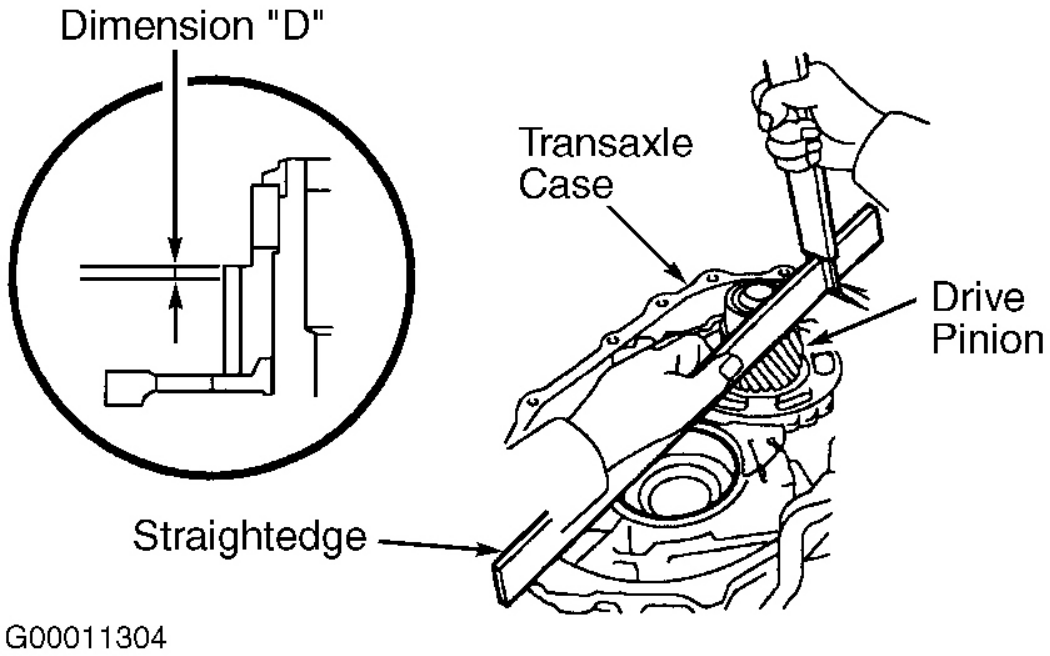

Fig. 74: Measuring Gap Between Top Of Differential Drive Pinion & Transaxle Case (Dimension "D")
Courtesy of TOYOTA MOTOR SALES, U.S.A., INC.

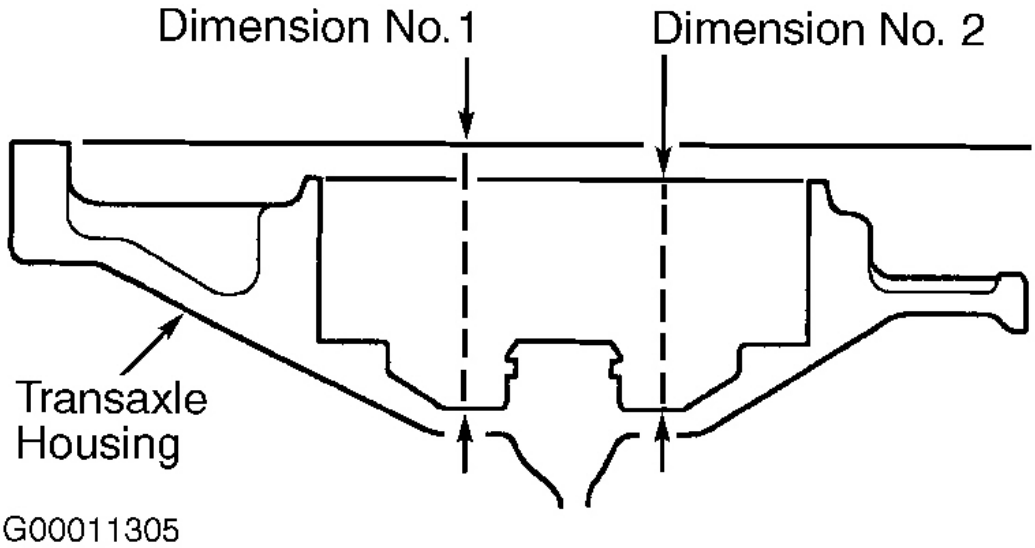

Fig. 75: Measuring Distance Between Transaxle Housing Surfaces (Dimensions No. 1 & No. 2)
Courtesy of TOYOTA MOTOR SALES, U.S.A., INC.

32. Coat needle roller bearing with petroleum jelly and install onto multiple clutch hub (shaft side). Install multiple clutch hub into transaxle case. Install thrust bearing onto multiple clutch hub (forward clutch side). Install forward clutch onto multiple clutch hub. See **Fig. 18**. Align splines of all discs of forward clutch with multiple clutch hub. Install thrust bearing onto forward clutch. Ensure Black side of thrust bearing is visible.
33. Install 2 NEW apply gaskets to front of transaxle case. See **Fig. 23**. Install differential assembly. Calculate transaxle housing-to-underdrive planetary gear assembly end play using the following formula: subtract dimension "D" from dimension "E", performed in steps 30 and 31 , minus thrust bearing thickness of .129" (3.28 mm), equals bearing race thickness. For end play specifications, see **TRANSAXLE HOUSING-TO-UNDERDRIVE PLANETARY GEAR ASSEMBLY END PLAY SPECIFICATIONS** table.

TRANSAXLE HOUSING-TO-UNDERDRIVE PLANETARY GEAR ASSEMBLY END PLAY SPECIFICATIONS

Application	In. (mm)
Camry Solara & RAV4	.020-.039 (.50-.99)
Celica, Highlander & Matrix	.008-.027 (.20-.69)

34. Select a bearing race to ensure end play is within specification. See **U/D PLANETARY GEAR THRUST BEARING RACE SELECTIONS** table. Install appropriate bearing race onto underdrive planetary gear assembly to ensure end play is within specification.

U/D PLANETARY GEAR THRUST BEARING RACE SELECTIONS

Dimension "E" - "D"	Race Thickness - In. (mm)
Camry Solara & RAV4	
Less Than .301 (7.64)	.14 (3.5)
.301 (7.64) Or More	.15 (3.8)
Celica, Highlander & Matrix	
Less Than .29 (7.42)	.14 (3.5)
.29 (7.42) Or More	.15 (3.8)

35. Coat oil pump "O" ring with ATF. Install oil pump and 7 bolts. Tighten bolts to 16 ft. lbs. (22 N.m). Ensure transaxle case and transaxle housing surfaces are clean. DO NOT allow oil to contact surfaces. Apply Three Bond (1281) or equivalent gasket sealant about .047" (1.20 mm) wide, to transaxle case around inside edges of bolt holes. Install transaxle housing to transaxle case.
36. Install 16 transaxle housing bolts. Apply thread sealant to 5 lower bolts inside torque converter housing, and tighten these bolts to 16 ft. lbs. (22 N.m) within 10 minutes of installation. Tighten all other bolts to 22 ft. lbs. (29 N.m). Ensure bolts are in correct locations. Longest bolts go inside torque converter housing. See **Fig. 16**.
37. Inspect input shaft end play. Using a dial indicator, measure input shaft end play. See **Fig. 15**. End play should be .011-.049" (.27-1.24 mm). Recheck differential side bearing preload. Using appropriate adapter and INCH-lb. torque wrench, measure differential preload. See **Fig. 61**. Preload should be 9.0-14.0 INCH lbs. (1.0-1.6 N.m) for NEW bearings and 4.4-7.1 INCH lbs. (.5-.8 N.m) for used bearings.
38. If preload is not within specification, remove differential assembly from transaxle case and replace shim at rear tapered roller bearing. See **Fig. 59**.
39. Place transaxle on 2 blocks of wood, with oil pan surface facing outward. Coat NEW manual valve lever shaft oil seal with ATF. Install oil seal into transaxle case. Install parking lock pawl rod to manual valve lever. Install NEW spacer and manual valve lever shaft into transaxle case. See **Fig. 9**.
40. Using a pin punch and hammer, drive in NEW roll pin. Turn spacer and lever shaft to align small hole for locating staking position in spacer with position mark on lever shaft. Using a pin punch and hammer, stake spacer through small hole. Ensure spacer does not turn.
41. Using needle nose pliers, install retainer spring. Install parking lock pawl bracket. Install bolts and tighten to 15 ft. lbs. (20 N.m). Install cover, manual detent spring and 2 bolts. Ensure cover and detent spring are installed correctly. See **Fig. 9**.
42. Tighten 1.063" (27.00 mm) bottom bolt to 15 ft. lbs. (20 N.m). Tighten .630" (16.00 mm) top bolt to 106 INCH lbs. (12 N.m). Coat NEW "O" rings with ATF and install them onto accumulator pistons. Coat 4 springs and 3 accumulator pistons with ATF, and install components into transaxle case holes. See **Fig. 76**. See appropriate ACCUMULATOR SPRING FREE LENGTH SPECIFICATIONS table for spring specifications and identification.

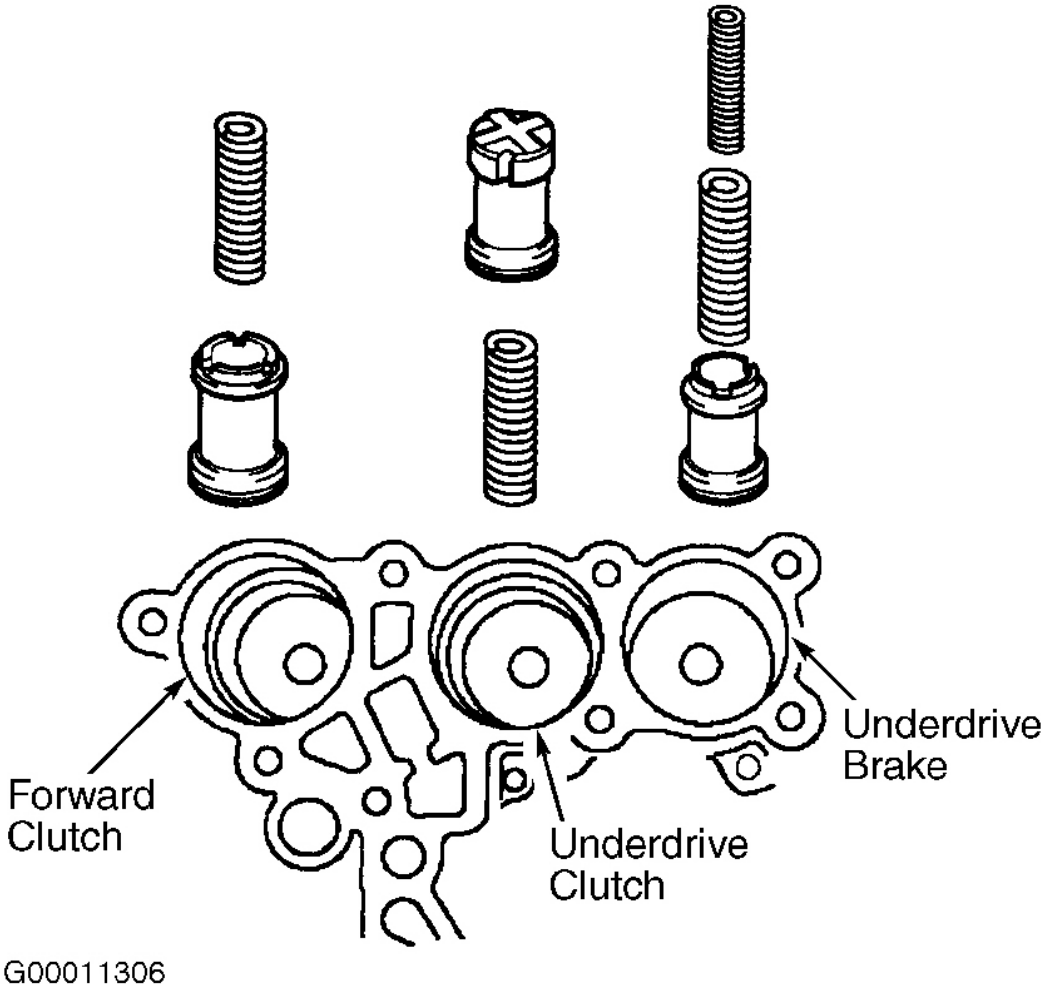

Fig. 76: Identifying Accumulator Piston & Spring Locations
Courtesy of TOYOTA MOTOR SALES, U.S.A., INC.

ACCUMULATOR SPRING FREE LENGTH SPECIFICATIONS (CAMRY SOLARA & RAV4)

Application (Color)	Free Length - In. (mm)	Outer Diameter - In. (mm)
Forward Clutch (C1) (Pink)	3.210 (81.53)	.728 (18.50)
Underdrive Brake (B3)		
Inner (Light Green)	2.372 (60.24)	.626 (15.90)
Outer (Blue)	2.859 (72.61)	.657 (16.70)
Underdrive Clutch (C3) (White)	3.563 (90.49)	.756 (19.20)

ACCUMULATOR SPRING FREE LENGTH SPECIFICATIONS (CELICA)

Application (Color)	Free Length - In. (mm)	Outer Diameter - In. (mm)

Forward Clutch (C1) (Red)	3.564 (90.53)	.728 (18.50)
Underdrive Brake (B3)		
Inner (Green)	2.372 (60.24)	.626 (15.90)
Outer (Blue)	2.859 (72.61)	.657 (16.70)
Underdrive Clutch (C3) (Yellow)	3.412 (86.66)	.756 (19.20)

ACCUMULATOR SPRING FREE LENGTH SPECIFICATIONS (HIGHLANDER & MATRIX)

Application (Color)	Free Length - In. (mm)	Outer Diameter - In. (mm)
Forward Clutch (C1) (Pink)	3.210 (81.53)	.728 (18.50)
Underdrive Brake (B3)		
Inner (Light Green)	2.372 (60.24)	.626 (15.90)
Outer (Blue)	2.937 (74.61)	.854 (21.70)
Underdrive Clutch (C3) (White)	3.563 (90.49)	.756 (19.20)

43. Install check ball body and spring. See **Fig. 11**. Coat NEW "O" ring with ATF and install on transaxle solenoid connector. Install connector into transaxle case, above park/neutral position switch, and tighten bolt to 48 INCH lbs. (5.4 N.m). Coat NEW apply gaskets with ATF and install them into transaxle case, below valve body assembly. Install brake drum gasket located near apply gaskets. See **Fig. 11**.
44. Install valve body assembly. Align groove in manual valve with pin in manual valve lever. Push valve body assembly against accumulator piston springs and check ball body to assist in installation. Install valve body bolts. Hand tighten 2 bolts temporarily. See **Fig. 10**. These bolts are positioning bolts.
45. Ensure valve body is aligned. Ensure bolts are installed in correct locations. For bolt length, see **VALVE BODY BOLT IDENTIFICATION** table. Tighten bolts to 97 INCH lbs. (11 N.m). Install NEW "O" ring on oil strainer. Tighten bolts to specification. See **TORQUE SPECIFICATIONS**.

VALVE BODY BOLT IDENTIFICATION

Bolt Identification	Length - In. (mm)
A	.98 (25)
B	1.61 (41)
C	1.77 (45)

46. Connect 5 shift solenoid connectors. Install fluid temperature sensor, clamps and bolt. Tighten bolt to 58 INCH lbs. (6.6 N.m). See **Fig. 8**. Install 3 magnets into oil pan in original locations. Apply Three Bond (2430) or equivalent to 18 oil pan bolt threads. Install NEW oil pan gasket, oil pan and bolts. Tighten bolts to 69 INCH lbs. (7.8 N.m) within 10 minutes of installation.
47. Coat NEW "O" rings with ATF and install on speed sensors. Install input turbine and counter gear speed sensors into top of transaxle case. See **Fig. 6**. Tighten bolts to 97 INCH lbs. (11 N.m). Install NEW "O" rings on oil line union and elbow (if equipped). Install oil line union and elbow into transaxle case. Tighten to 20 ft. lbs. (27 N.m).
48. Coat NEW "O" ring with ATF and install on transaxle test plug. Install transaxle test plug into transaxle case. See **Fig. 7**. Install park/neutral position switch onto manual valve lever shaft and temporarily install 2 adjusting bolts.
49. Install NEW lock tab and nut. Tighten nut to 61 INCH lbs. (6.9 N.m). Temporarily install control shift

lever. Turn lever counterclockwise until it stops, then turn it clockwise 2 notches. Remove control shift lever. Align groove in park/neutral position switch to neutral basic line. Tighten 2 adjusting bolts to 48 INCH lbs. (5.4 N.m). Stake lock tab onto nut. Install control shift lever, washer and nut. Tighten nut to 61 INCH lbs. (6.9 N.m).

50. Install torque converter into transaxle housing while rotating. Ensure converter is properly installed by measuring distance from edge of transaxle housing. See **Fig. 77**. Distance should be .524" (13.30 mm) for all models except Highlander and Matrix. On Highlander and Matrix models, go to next step.
51. Install torque converter into transaxle housing while rotating. Ensure converter is properly installed by measuring the following dimensions. Using vernier calipers, measure dimension "A" between transaxle fitting part and converter fitting part of drive plate. See **Fig. 78**. Using vernier calipers and a straightedge, measure dimension "B" as shown in **Fig. 79**. Ensure dimension "B" is greater than dimension "A". Do not add thickness of straightedge. Standard measurement is dimension "A" plus .039" (1.00 mm) or more.

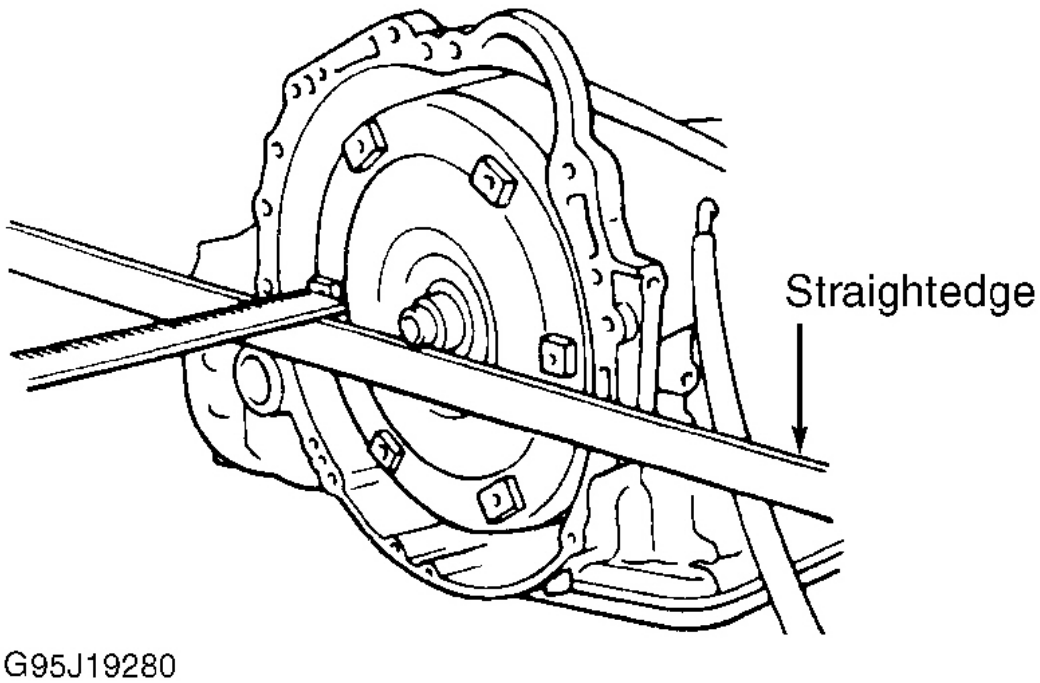

Fig. 77: Measuring Torque Converter Depth
Courtesy of TOYOTA MOTOR SALES, U.S.A., INC.

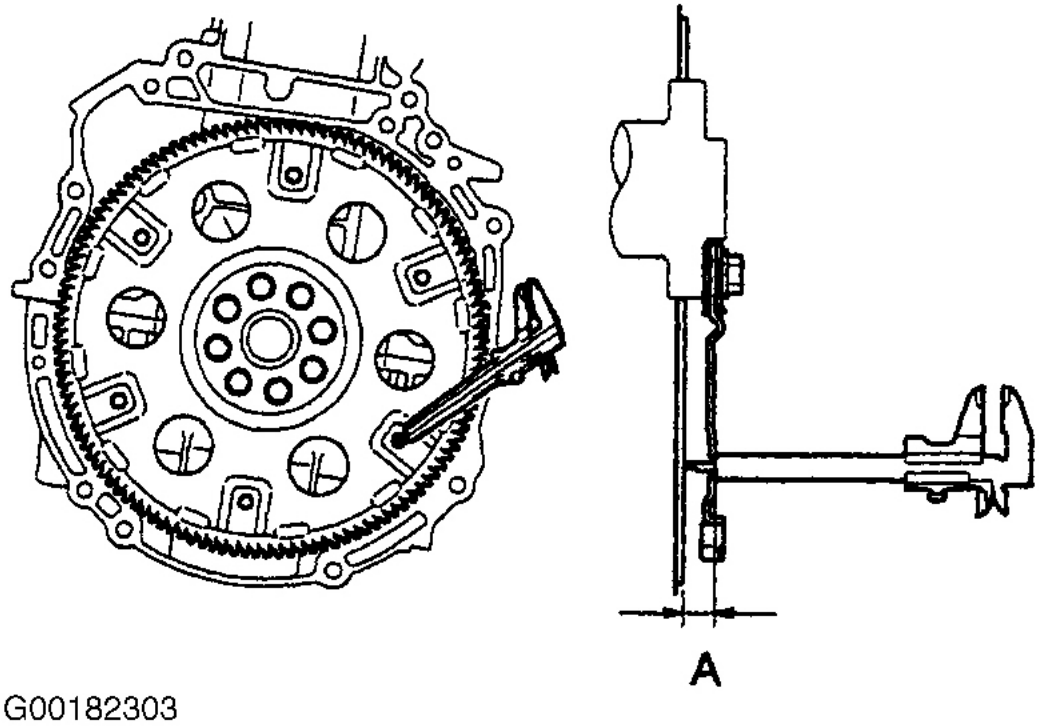

Fig. 78: Measuring Dimension "A" Between Transaxle & Drive Plate
Courtesy of TOYOTA MOTOR SALES, U.S.A., INC.

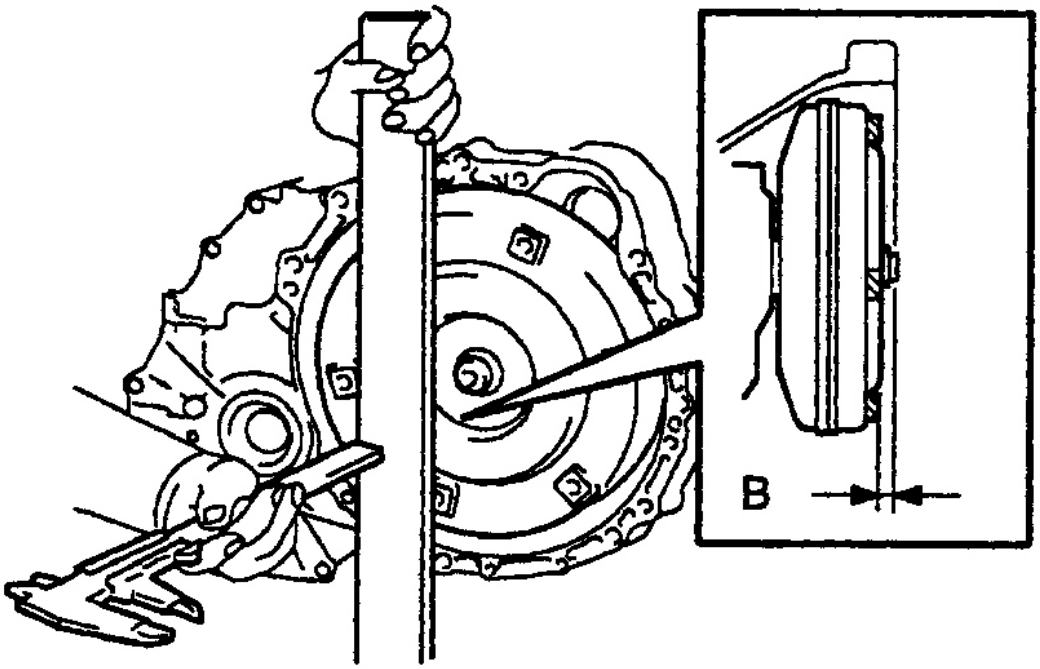

G00182304

Fig. 79: Measuring Dimension "B" Between Torque Converter & Transaxle Housing
Courtesy of TOYOTA MOTOR SALES, U.S.A., INC.

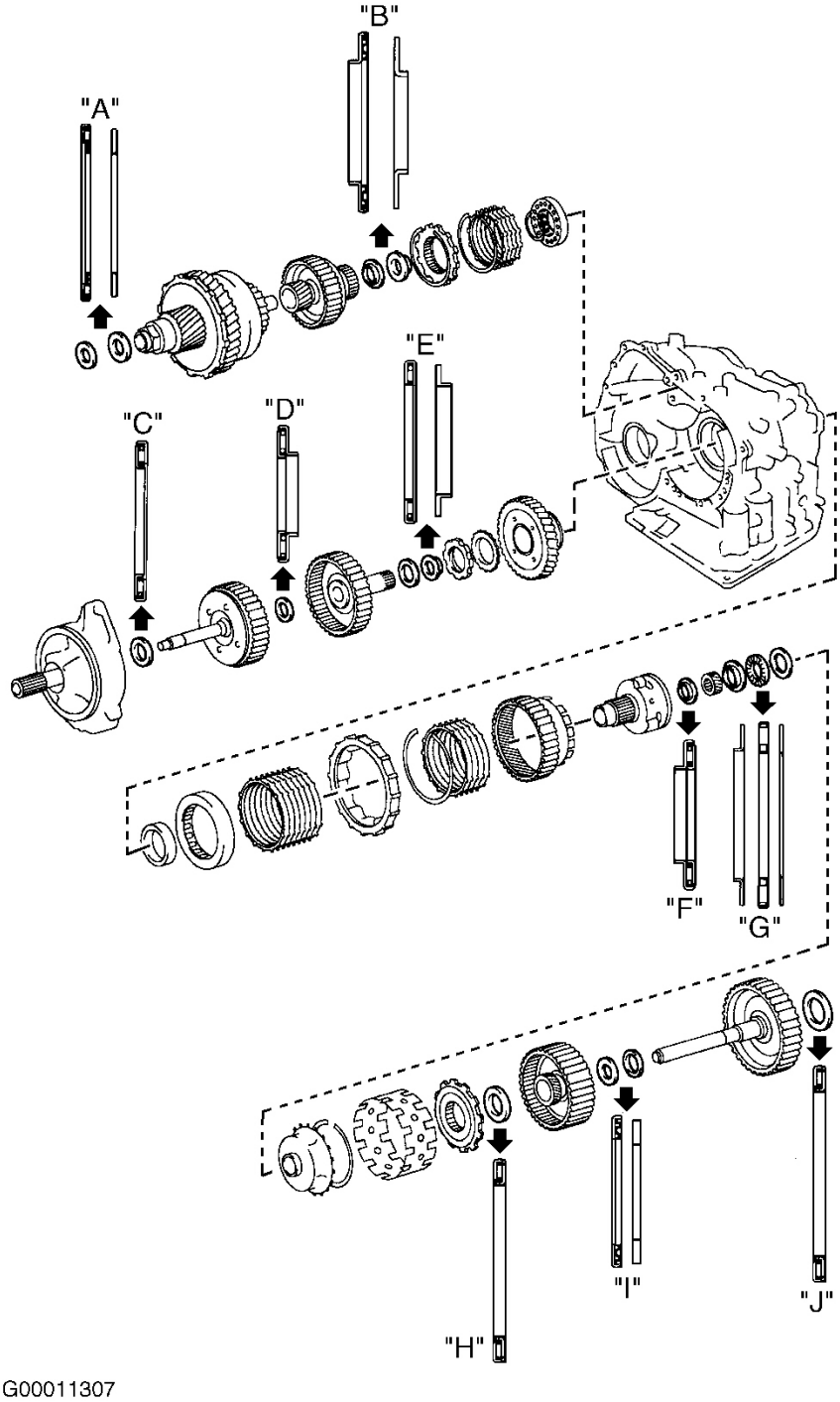

Fig. 80: Identifying Thrust Bearing & Race Locations
Courtesy of TOYOTA MOTOR SALES, U.S.A., INC.

THRUST BEARING & RACE SPECIFICATIONS (1)

Application	Inner Diameter - In. (mm)	Outer Diameter - In. (mm)
A		
Bearing (2)	2.252 (57.20)	3.345 (84.96)
Rear Race (3)	2.220 (56.40)	3.268 (83.00)
B		
Bearing	1.485 (37.73)	2.283 (58.00)
Rear Race	1.177 (29.90)	2.185 (55.50)
C		
Bearing	1.333 (33.85)	2.055 (52.20)
D		
Bearing	.925 (23.50)	1.732 (44.00)
E		
Bearing	1.429 (36.30)	2.055 (52.20)
Rear Race	1.358 (34.50)	1.909 (48.50)
F		
Bearing (4)	1.362 (34.60)	1.909 (48.50)
G		
Front Race	1.587 (40.30)	2.283 (58.00)
Bearing	1.520 (38.60)	2.362 (60.00)
Rear Race	1.520 (38.60)	2.283 (58.00)
H		
Bearing	2.110 (53.60)	2.740 (69.60)
I		
Bearing	1.327 (33.70)	1.898 (48.20)
Rear Race	1.193 (30.30)	1.811 (46.00)
J		
Bearing	2.110 (53.60)	2.740 (69.60) Or 2.763 (70.18)

(1) For component locations, refer to illustration. See **Fig. 80**.

(2) On U241E models, bearing inner diameter is 2.087" (53.0 mm). Outer diameter is 3.079" (78.2 mm).

(3) On U241E models, rear race inner diameter is 2.051" (52.1 mm). Outer diameter is 2.972" (75.5 mm).

(4) On U241E models, bearing inner diameter is 1.362" (34.6 mm). Outer diameter is 2.055" (52.2 mm).

TORQUE SPECIFICATIONS

TORQUE SPECIFICATIONS

Application	Ft. Lbs. (N.m)
Converter-To-Drive Plate Bolt	30 (41)
Counter Drive Gear Nut	207 (280)

Differential Ring Gear Bolt	71 (96)
Drive Plate Bolt	65 (88)
Elbow	20 (27)
Manual Detent Spring Bottom Bolt	15 (20)
Oil Pan Drain Plug	36 (49)
Oil Pump Bolt	16 (22)
Parking Lock Pawl Bracket Bolt	15 (20)
Transaxle Housing-To-Transaxle Case Bolt	
Lower Bolts (5)	16 (22)
All Other Bolts	22 (29)
Transaxle Rear Cover Bolt	
Bolt At 5 O'Clock Position	14 (19)
All Other Bolts	18 (25)
Underdrive Planetary Gear Lock Nut	207 (280)
Union	20 (27)
	INCH Lbs. (N.m)
Apply Pipe Clamp Bolt	
Transaxle Case	48 (5.4)
Transaxle Housing	87 (9.8)
Control Shift Lever Lock Tab Nut	61 (6.9)
Manual Detent Spring Top Bolt	106 (12)
Oil Deflector Bolt	87 (9.8)
Oil Pan Bolt	69 (7.8)
Oil Strainer Bolt	97 (11)
Parking Lock Pawl Clamp Bolt	87 (9.8)
Park/Neutral Position Switch	
Nut	61 (6.9)
Bolt	48 (5.4)
Pressure Relief Check Ball Retainer Bolt	97 (11)
Shift Solenoids	
SLT & SL1 Solenoid Bolt	58 (6.6)
All Other Solenoid Bolts	97 (11)
Solenoid Connector Bolt	48 (5.4)
Speed Sensor Bolt	11 (97)
Stator Shaft-To-Oil Pump Bolt	87 (9.8)
Temperature Sensor Clamp Bolt	58 (6.6)
Upper Valve Body Cover Bolt	58 (6.6)
Upper & Lower Valve Body Bolt	97 (11)
Valve Body-To-Transaxle Bolt	97 (11)

TRANSAXLE SPECIFICATIONS

TRANSAXLE SPECIFICATIONS

Application	In. (mm)
Bushing Inside Diameter (Maximum)	
Multiple Clutch Hub	.909 (23.09)
Oil Pump Body	1.503 (38.18)
Oil Pump Stator Shaft	.849 (21.57)
Underdrive Clutch Drum	1.285 (32.64)
Direct Clutch End Play	.008-.035 (.20-.90)
Input Shaft End Play	.011-.049 (.27-1.24)
Underdrive Planetary Gear Assembly End Play	.008-.027 (.20-.69)
Oil Pump	
Driven Gear-To-Body Clearance	.003-.006 (.07-.15)
Driven Gear Tip-To-Cresent Clearance	.004-.006 (.11-.15)
Gear Side Clearance	.0008-.0016 (.020-.040)
Piston Stroke	
Direct Clutch	.024-.029 (.62-.74)
Forward Clutch	.056-.069 (1.41-1.75)
Underdrive Brake	.074-.082 (1.87-2.08)
Underdrive Clutch	.058-.067 (1.47-1.69)
1st/Reverse Brake	.043-.049 (1.10-1.24)
2nd Brake (1)	.024-.029 (.62-.74)
Side Gear Backlash	.002-.008 (.05-.20)
Torque Converter Runout (Maximum)	
Drive Plate	.008 (.20)
Sleeve	.012 (.30)

(1) On U241E models, 2nd brake piston stroke is .024-.036" (.62-.91 mm).

CLUTCH DISC & PLATE QUANTITY

Component	Discs	Plates
Direct Clutch	4	4
Forward Clutch	4	4
Underdrive Brake	3	3
Underdrive Clutch	3	3
1st/Reverse Brake	5	5
2nd Brake (1)	4	4

(1) On U241E models, 2nd brake has 3 discs and 3 plates.