zoom-zoom

mazda

MAZDA2

Owner's Manual

MAZDA2

Zoom-Zoom

All children instinctively know it.

A few adults still remember it.

One unique car company refuses to outgrow it.

In grown-up language, it means the exhilaration and

liberation that come from experiencing sheer motion.

But as usual, children put it much better and simply call it " Go Zoom-Zoom."

We practice it every day.

It's why we build the kind of cars we do.

Zoom-Zoom.

Can we re-awaken it in you today?

MEMO

MEMO

A Word to Mazda Owners

Thank you for choosing a Mazda. We at Mazda design and build vehicles with complete customer satisfaction in mind.

To help ensure enjoyable and trouble-free operation of your Mazda, read this manual carefully and follow its recommendations.

Regular servicing of your vehicle by an expert repairer helps maintain both its roadworthiness and its resale value. A world-wide network of Authorised Mazda Repairers can help you with their professional servicing expertise.
Their specially trained personnel are best qualified to service your Mazda vehicle properly and exactly. Also, they are supported by a wide range of highly specialized tools and equipment specially developed for servicing Mazda vehicles. When maintenance or service is necessary we recommend an Authorised Mazda Repairer.

We assure you that all of us at Mazda have an ongoing interest in your motoring pleasure and in your full satisfaction with your Mazda product.

Mazda Motor Corporation
HIROSHIMA, JAPAN

Important Notes About This Manual
Keep this manual in the glove box as a handy reference for the safe and enjoyable use of your Mazda. Should you resell the vehicle, leave this manual with it for the next owner.

All specifications and descriptions are accurate at the time of printing. Because improvement is a constant goal at Mazda, we reserve the right to make changes in specifications at any time without notice and without obligation.

Please be aware that this manual applies to all models, equipment and options. As a result, you may find some explanations for equipment not installed on your vehicle.

©2015 Mazda Motor Corporation
Jan. 2016 (Print4)

How to Use This Manual

We want to help you get the most driving pleasure from your vehicle. Your owner's manual, when read from cover to cover, can do that in many ways.

Illustrations complement the words of the manual to best explain how to enjoy your Mazda. By reading your manual, you can find out about the features, important safety information, and driving under various road conditions.

The symbol below in this manual means "Do not do this" or "Do not let this happen".

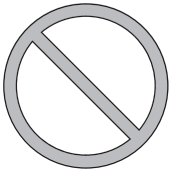

References to left hand and right hand are made as if facing in the same direction the vehicle faces. Although this manual explains a left-hand-drive model, it also applies to right-hand-drive models.

Index: A good place to start is the Index, an alphabetical listing of all information in your manual.

You'll find several WARNINGs, CAUTIONs, and NOTEs in the manual.

⚠ *WARNING*

A WARNING indicates a situation in which serious injury or death could result if the warning is ignored.

⚠ CAUTION

A CAUTION indicates a situation in which bodily injury or damage to your vehicle, or both, could result if the caution is ignored.

NOTE

A NOTE provides information and sometimes suggests how to make better use of your vehicle.

The symbol below, located on some parts of the vehicle, indicates that this manual contains information related to the part. Please refer to the manual for a detailed explanation.

Table of Contents

Pictorial Index 1

Interior, exterior views and part identification of your Mazda.

Essential Safety Equipment 2

Important information about safety equipment, including seats, seat belt system, child-restraint systems and SRS air bags.

Before Driving 3

Use of various features, including keys, doors, mirrors and windows.

When Driving 4

Information concerning safe driving and stopping.

Interior Features 5

Use of various features for ride comfort, including air-conditioning and audio system.

Maintenance and Care 6

How to keep your Mazda in top condition.

If Trouble Arises 7

Helpful information on what to do if a problem arises with the vehicle.

Customer Information 8

Important consumer information including warranties and add-on equipment.

Specifications 9

Technical information about your Mazda.

Index 10

MEMO

1 Pictorial Index

Interior, exterior views and part identification of your Mazda.

Interior Overview (Left-Hand Drive Model)..... 1-2
Interior Equipment (View A) 1-2
Interior Equipment (View B) 1-4
Interior Equipment (View C) 1-5

Interior Overview (Right-Hand Drive Model) 1-6
Interior Equipment (View A) 1-6
Interior Equipment (View B) 1-8
Interior Equipment (View C) 1-9

Exterior Overview..... 1-10
Saloon 1-10
Hatchback 1-11

Interior Overview (Left-Hand Drive Model)

Interior Equipment (View A)

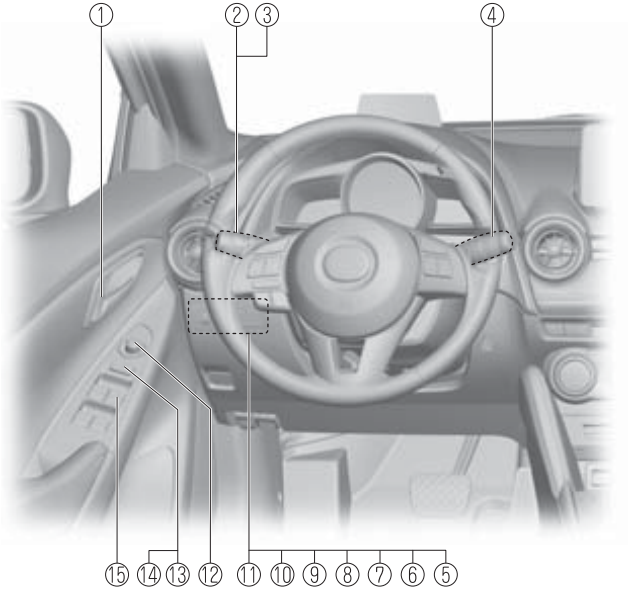

① Door-lock knob ..... page 3-19
② Turn and lane-change signal ..... page 4-70
③ Lighting control ..... page 4-60
④ Wiper and washer lever ..... page 4-71
⑤ Blind Spot Monitoring (BSM) switch ..... page 4-116
⑥ DSC OFF switch ..... page 4-87
⑦ Tyre pressure monitoring system set switch ..... page 4-146
⑧ i-stop OFF switch ..... page 4-21
⑨ Headlight Levelling switch ..... page 4-66
⑩ LDWS switch ..... page 4-108
⑪ SCBS OFF switch ..... page 4-130
⑫ Outside mirror switch ..... page 3-34
⑬ Power window lock switch ..... page 3-40
⑭ Door-lock switch ..... page 3-16
⑮ Power window switches ..... page 3-37

 The equipment and installation position varies by vehicle

Interior Overview (Left-Hand Drive Model)

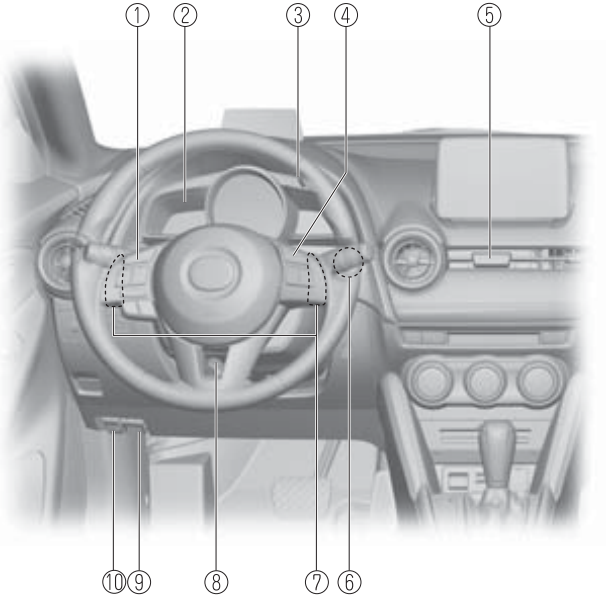

① Audio control switches..... page 5-69
② Instrument cluster..... page 4-24
③ Instrument panel illumination knob..... page 4-32
④ Cruise control switches..... page 4-138
⑤ Hazard warning flasher switch..... page 4-77
⑥ Push button start..... page 4-4
⑦ Steering shift switches..... page 4-51
⑧ Lock release lever..... page 3-33
⑨ Bonnet release handle..... page 6-19
⑩ Remote fuel-filler flap release..... page 3-31

Interior Overview (Left-Hand Drive Model)

Interior Equipment (View B)

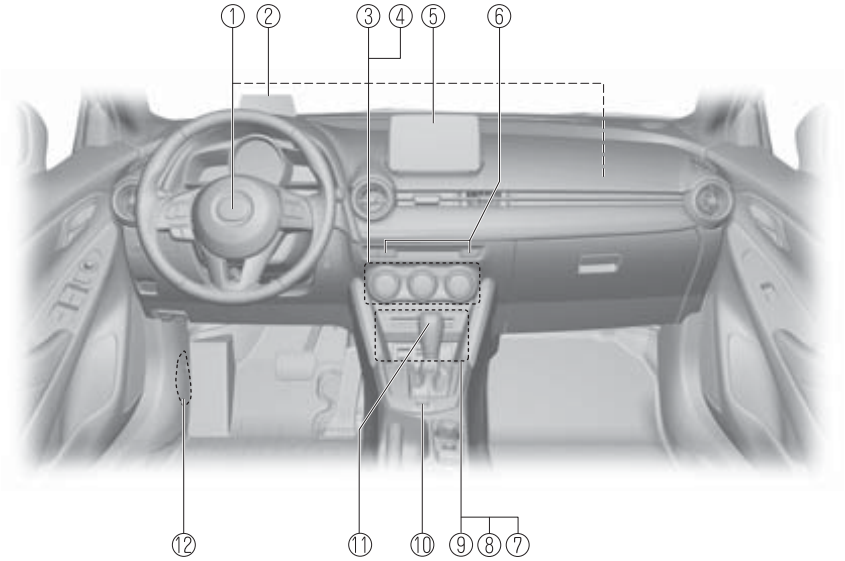

① SRS air bags ..... page 2-41
② Active driving display ..... page 4-36
③ Air-conditioning system ..... page 5-2
④ Rear window defogger switch ..... page 4-76
⑤ Audio system ..... page 5-16
⑥ Seat warmer switches ..... page 2-6
⑦ CD player ..... page 5-16
⑧ Accessory sockets ..... page 5-153
⑨ External input terminal ..... page 5-71
⑩ Drive selection switch ..... page 4-98
⑪ Shift lever/Selector lever ..... page 4-45, 4-48
⑫ Fuse block (Left side) ..... page 6-61

 The equipment and installation position varies by vehicle

Interior Overview (Left-Hand Drive Model)

Interior Equipment (View C)

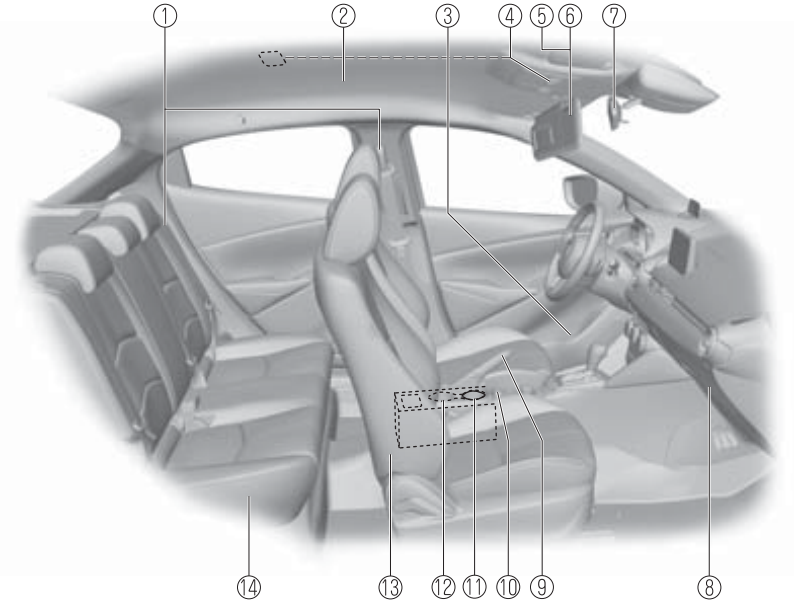

① Seat belts ..... page 2-13
② SRS air bag ..... page 2-41
③ Bottle holder ..... page 5-154
④ Overhead lights ..... page 5-150
⑤ Sunvisor ..... page 5-150
⑥ Vanity mirror ..... page 5-150
⑦ Rearview mirror ..... page 3-36
⑧ Glove compartment ..... page 5-155
⑨ Parking brake ..... page 4-80
⑩ Commander switch ..... page 5-45
⑪ Removable ashtray ..... page 5-157
⑫ Cup holders ..... page 5-154
⑬ Front seat ..... page 2-5
⑭ Rear seat ..... page 2-7

The equipment and installation position varies by vehicle

Interior Overview (Right-Hand Drive Model)

Interior Equipment (View A)

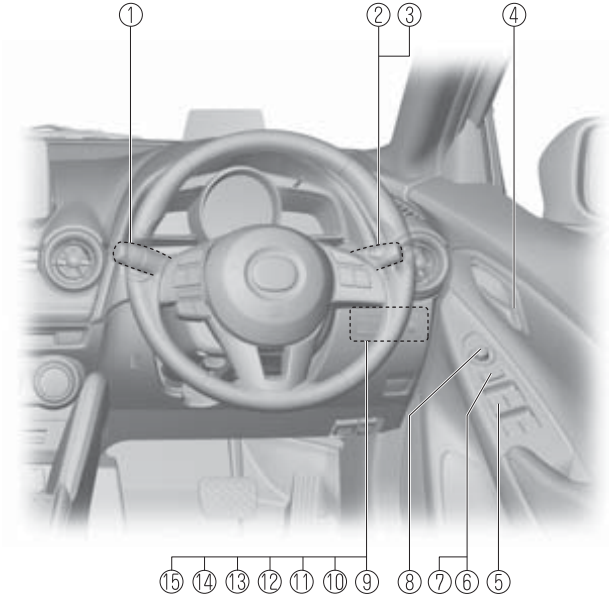

① Wiper and washer lever ..... page 4-71
② Turn and lane-change signal ..... page 4-70
③ Lighting control ..... page 4-60
④ Door-lock knob ..... page 3-19
⑤ Power window switches ..... page 3-37
⑥ Power window lock switch ..... page 3-40
⑦ Door-lock switch ..... page 3-16
⑧ Outside mirror switch ..... page 3-34
⑨ DSC OFF switch ..... page 4-87
⑩ Tyre pressure monitoring system set switch ..... page 4-146
⑪ i-stop OFF switch ..... page 4-21
⑫ Headlight Levelling switch ..... page 4-66
⑬ LDWS switch ..... page 4-108
⑭ SCBS OFF switch ..... page 4-130
⑮ Blind Spot Monitoring (BSM) switch ..... page 4-116

 The equipment and installation position varies by vehicle

Interior Overview (Right-Hand Drive Model)

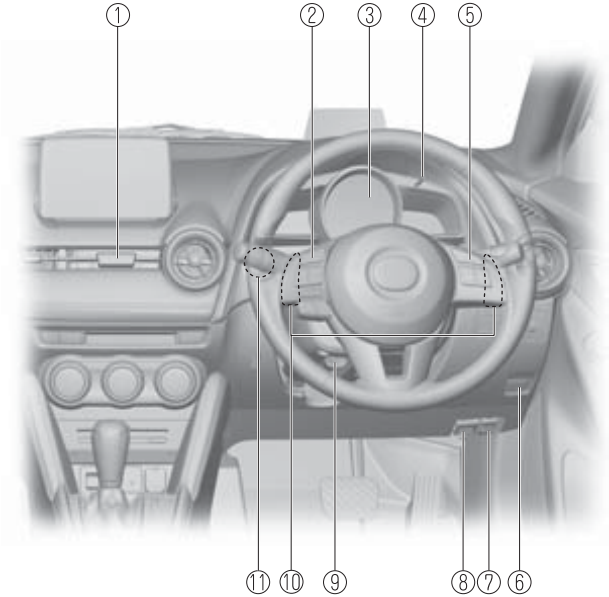

① Hazard warning flasher switch ..... page 4-77
② Audio control switches ..... page 5-69
③ Instrument cluster ..... page 4-24
④ Instrument panel illumination knob ..... page 4-32
⑤ Cruise control switches ..... page 4-138
⑥ Boot release button ..... page 3-21
⑦ Remote fuel-filler flap release ..... page 3-31
⑧ Bonnet release handle ..... page 6-19
⑨ Lock release lever ..... page 3-33
⑩ Steering shift switches ..... page 4-51
⑪ Push button start ..... page 4-4

The equipment and installation position varies by vehicle

Interior Overview (Right-Hand Drive Model)

Interior Equipment (View B)

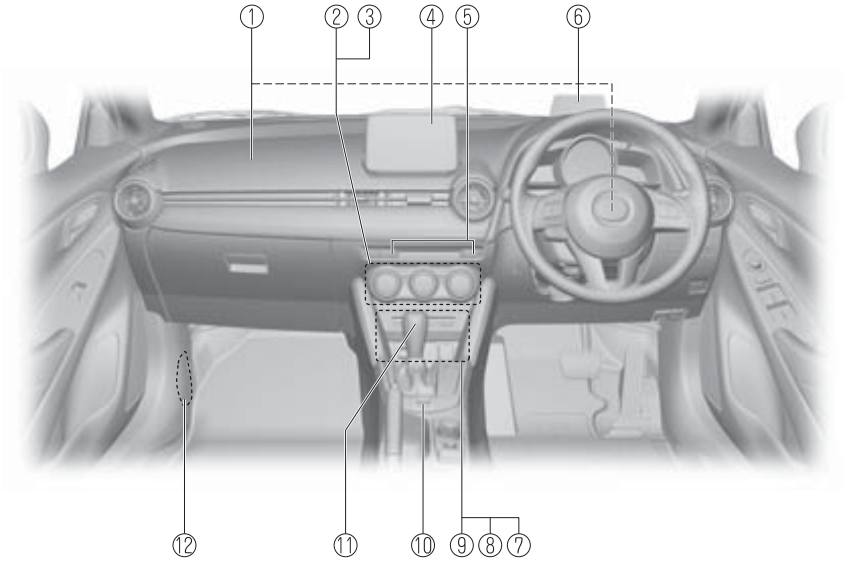

① SRS air bags ..... page 2-41
② Air-conditioning system ..... page 5-2
③ Rear window defogger switch ..... page 4-76
④ Audio system ..... page 5-16
⑤ Seat warmer switches ..... page 2-6
⑥ Active driving display ..... page 4-36
⑦ DVD/CD player ..... page 5-16
⑧ Accessory sockets ..... page 5-153
⑨ External input terminal ..... page 5-71
⑩ Drive selection switch ..... page 4-98
⑪ Shift lever/Selector lever ..... page 4-45, 4-48
⑫ Fuse block (Left side) ..... page 6-61

 The equipment and installation position varies by vehicle

Interior Overview (Right-Hand Drive Model)

Interior Equipment (View C)

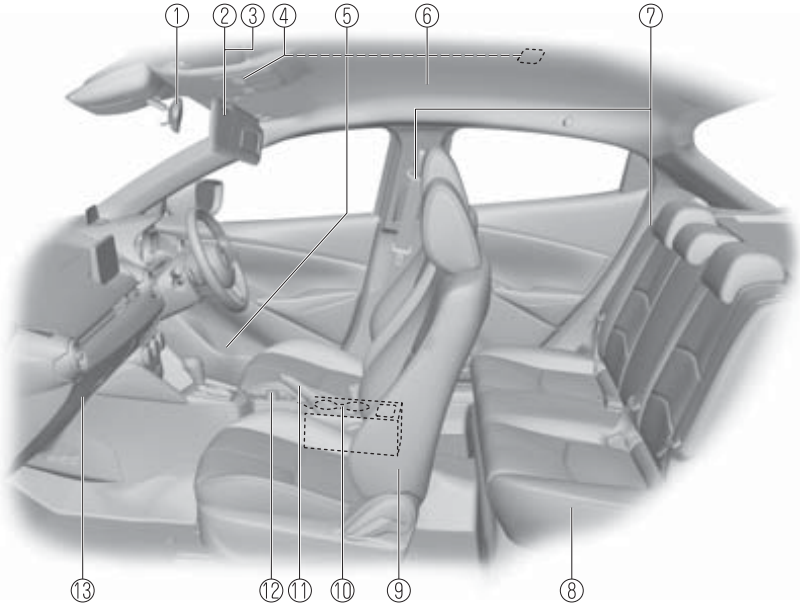

① Rearview mirror ..... page 3-36
② Sunvisor ..... page 5-150
③ Vanity mirror ..... page 5-150
④ Overhead lights ..... page 5-150
⑤ Bottle holder ..... page 5-154
⑥ SRS air bag ..... page 2-41
⑦ Seat belts ..... page 2-13
⑧ Rear seat ..... page 2-7
⑨ Front seat ..... page 2-5
⑩ Cup holders ..... page 5-154
⑪ Parking brake ..... page 4-80
⑫ Commander switch ..... page 5-45
⑬ Glove compartment ..... page 5-155

The equipment and installation position varies by vehicle

Exterior Overview

Saloon

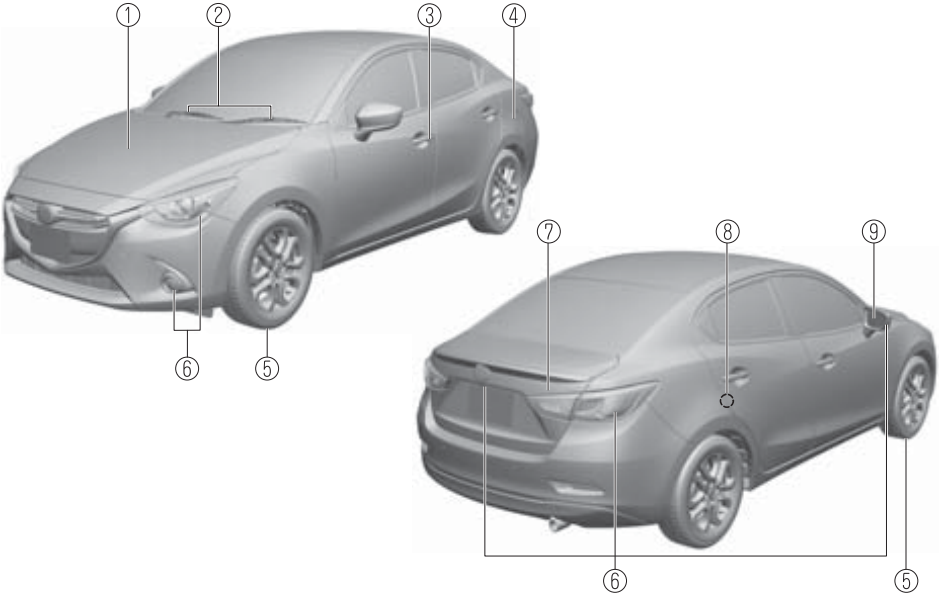

① Bonnet ..... page 6-19
② Windscreen wiper blades ..... page 6-33
③ Doors and keys ..... page 3-11
④ Fuel-filler flap ..... page 3-31
⑤ Wheels and Tyres ..... page 6-43
⑥ Exterior lights ..... page 6-48
⑦ Boot lid ..... page 3-21
⑧ Child safety locks ..... page 3-20
⑨ Outside mirror ..... page 3-34

 The equipment and installation position varies by vehicle

Exterior Overview

Hatchback

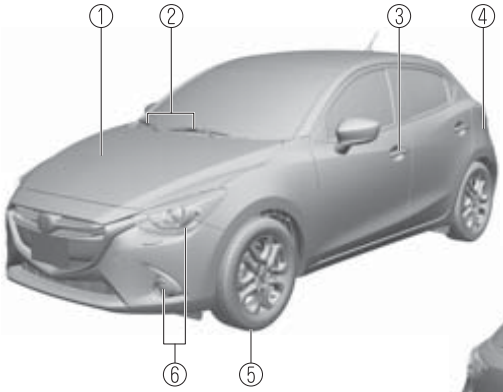

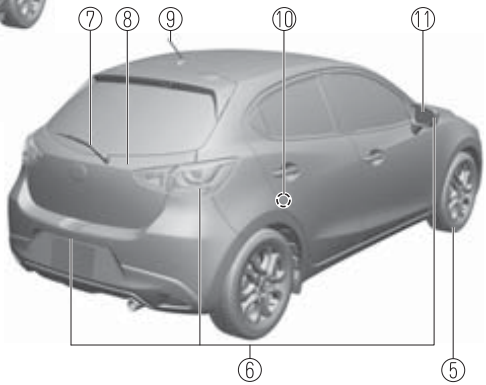

① Bonnet ..... page 6-19
② Windscreen wiper blades ..... page 6-33
③ Doors and keys ..... page 3-11
④ Fuel-filler flap ..... page 3-31
⑤ Wheels and Tyres ..... page 6-43
⑥ Exterior lights ..... page 6-48
⑦ Rear window wiper blade ..... page 6-36
⑧ Liftgate ..... page 3-21
⑨ Aerial ..... page 5-16
⑩ Child safety locks ..... page 3-20
⑪ Outside mirror ..... page 3-34

The equipment and installation position varies by vehicle

MEMO

2 Essential Safety Equipment

Important information about safety equipment, including seats, seat belt system, child-restraint systems and SRS air bags.

Seats 2-2
- Seat Precautions 2-2
- Front Seat 2-5
- Rear Seat 2-7
- Head Restraints 2-11

Seat Belt Systems 2-13
- Seat Belt Precautions 2-13
- Seat Belt 2-17
- Seat Belt Warning Systems 2-18
- Seat Belt Pretensioner and Load Limiting Systems 2-18
- Centre-Rear Position Seat Belt* 2-20

Child Restraint 2-22
- Child-Restraint Precautions 2-22
- Child-Restraint System Installation 2-27
- Child-Restraint System Suitability for Various Seat Positions Table 2-32
- Installing Child-Restraint Systems 2-36

SRS Air Bags 2-41
- Supplementary Restraint System (SRS) Precautions 2-41
- Front Passenger Air Bag Deactivation Switch* 2-47
- Supplementary Restraint System Components 2-51
- How the SRS Air Bags Work 2-52
- SRS Air Bag Deployment Criteria 2-56
- Limitations to SRS Air Bag 2-58

*Some models.

Seat Precautions

⚠ *WARNING*

Make sure the adjustable components of a seat are locked in place:
Adjustable seats and seatbacks that are not securely locked are dangerous. In a sudden stop or collision, the seat or seatback could move, causing injury. Make sure the adjustable components of the seat are locked in place by attempting to slide the seat forward and backward and rocking the seatback.

Never allow children to adjust a seat:
Allowing children to adjust a seat is dangerous as it could result in serious injury if a child's hands or feet become caught in the seat.

Do not drive with the seatback unlocked:
All of the seatbacks play an important role in your protection in a vehicle. Leaving the seatback unlocked is dangerous as it can allow passengers to be ejected or thrown around and baggage to strike occupants in a sudden stop or collision, resulting in severe injury. After adjusting the seatback at any time, even when there are no other passengers, rock the seatback to make sure it is locked in place.

Adjust the driver's seat only when the vehicle is stopped:
Adjusting the driver's seat while the vehicle is moving is dangerous. The driver could lose control of the vehicle and have an accident.

Do not modify or replace the front seats:
Modifying or replacing the front seats such as replacing the upholstery or loosening any bolts is dangerous. The front seats contain air bag components essential to the supplementary restraint system. Such modifications could damage the supplementary restraint system and result in serious injury. Consult an Authorised Mazda Repairer if there is any need to remove or reinstall the front seats.

Do not drive with damaged front seats:
Driving with damaged front seats, such as seat cushions torn or damaged down to the urethane, is dangerous. A collision, even one not strong enough to inflate the air bags, could damage the front seats which contain essential air bag components. If there was a subsequent collision, an air bag may not deploy which could lead to injuries. Always have an Authorised Mazda Repairer inspect the front seats, front seat belt pretensioners and air bags after a collision.

⚠ *WARNING*

Do not drive with either front seats reclined:
Sitting in a reclined position while the vehicle is moving is dangerous because you do not get the full protection from seat belts. During sudden braking or a collision, you can slide under the lap belt and suffer serious internal injuries. For maximum protection, sit well back and upright.

Do not place an object such as a cushion between the seatback and your back:
Putting an object such as a cushion between the seatback and your back is dangerous because you will be unable to maintain a safe driving posture and the seat belt cannot function at its full capacity in a collision, which could result in a serious accident, injury or death.

Do not place objects under the seat:
The object could get stuck and cause the seat to not be fixed securely, and result in an accident.

Do not stack cargo higher than the seatbacks:
Stacking luggage or other cargo higher than the seatbacks is dangerous. During sudden braking or a collision, objects can fly around and become projectiles that may hit and injure passengers.

Make sure luggage and cargo is secured before driving:
Not securing cargo while driving is dangerous as it could move or be crushed during sudden braking or a collision and cause injury.

Never allow a passenger to sit or stand on the folded seatback while the vehicle is moving:
Driving with a passenger on the folded seatback is dangerous. Allowing a child to sit up on the folded seatback while the vehicle is moving is particularly dangerous. In a sudden stop or even a minor collision, a child not in a proper seat or child-restraint system and seat belt could be thrown forward, back or even out of the vehicle resulting in serious injuries or death. The child in the baggage area could be thrown into other occupants and cause serious injury.

Never give the car keys to children and do not allow them to play in the vehicle (Saloon):
Playing with the folding rear seats is dangerous. Once the seatbacks are back up, a child in the boot would not be able to get out the way they had entered. If you have small children, keep the seatbacks locked.

⚠ *WARNING*

Always leave your car locked and keep the car keys safely away from children (Saloon): ***Leaving your car unlocked or the keys in reach of children is dangerous. Children who find their way into the boot through an unlocked rear seatback or an open boot can become accidentally locked in the boot. This could result in death or brain damage from heat prostration, particularly in the summer. Always lock the doors and the boot, and as an added measure, keep the rear seatbacks locked, whether you have children in your home or not.***

⚠ CAUTION

- When operating a seat, be careful not to put your hands or fingers near the moving parts of the seat or on the side trim to prevent injury.
- When moving the seats, make sure there is no cargo in the surrounding area. If the cargo gets caught it could damage the cargo.
- When moving the seats forward and rearward or returning a rear-reclined seatback to its upright position, make sure you hold onto the seatback with your hand while operating. If the seatback is not held, the seat will move suddenly and could cause injury.

NOTE

When returning a rear seat to its original position, place the seat belt in its normal position. Verify that the seat belt pulls out and retracts.

Front Seat

▼Seat Operation

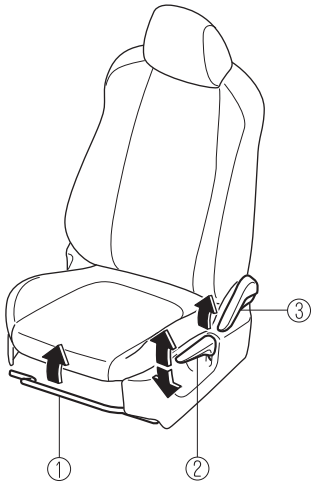

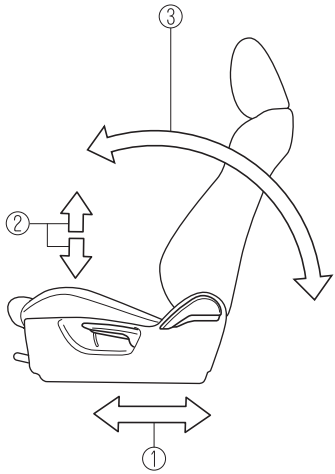

①Seat Slide
To move a seat forward or backward, raise the lever and slide the seat to the desired position and release the lever.
Make sure the lever returns to its original position and the seat is locked in place by attempting to push it forward and backward.

②Height Adjustment (Driver's Seat)
To adjust the seat height, move the lever up or down.

③Seat Recline
To change the seatback angle, lean forward slightly while raising the lever. Then lean back to the desired position and release the lever.
Make sure the lever returns to its original position and the seatback is locked in place by attempting to push it forward and backward.

▼Seat Warmer*

The front seats are electrically heated. The ignition must be switched ON.
Press the seat warmer switch while the ignition is switched ON to operate the seat warmer. The indicator lights turn on to indicate that the seat warmer is operating. The mode changes as follows each time the seat warmer switch is pressed.

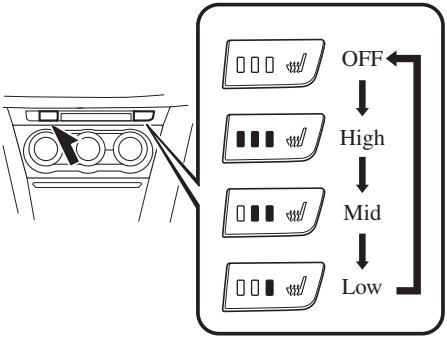

⚠ WARNING

Be careful when using the seat warmer:
The heat from the seat warmer may be too hot for some people, as indicated below, and could cause a low-temperature burn.

- ***Infants, small children, elderly people, and physically challenged people***
- ***People with delicate skin***
- ***People who are excessively fatigued***
- ***People who are intoxicated***
- ***People who have taken sleep-inducing medicine such as sleeping pills or cold medicine***

⚠ WARNING

Do not use the seat warmer with anything having high moisture-retention ability such as a blanket or cushion on the seat:
The seat may be heated excessively and cause a low-temperature burn.

Do not use the seat warmer even when taking a short nap in the vehicle:
The seat may be heated excessively and cause a low-temperature burn.

Do not place heavy objects with sharp projections on the seat, or insert needles or pins into it:
This could cause the seat to become excessively heated and result in injury from a minor burn.

⚠ CAUTION

Do not use organic solvents to clean the seat. It may damage the seat surface and the heater.

*Some models.

NOTE

- If the ignition is switched off while the seat warmer is operating (High, Mid or Low) and then switched ON again, the seat warmer will automatically operate at the temperature set before switching off the ignition.
- Use the seat warmer when the engine is running. Leaving the seat warmer on for long periods with the engine not running could cause the battery power to be depleted.
- The temperature of the seat warmer cannot be adjusted beyond High, Mid and Low because the seat warmer is controlled by a thermostat.

Rear Seat

▼Split/One-piece Folding the Seatback

By lowering the rear seatback(s) the luggage compartment space can be expanded.

⚠ *WARNING*

Do not drive the vehicle with occupants on folded down seatback(s) or in the luggage compartment.
Putting occupants in the luggage compartment is dangerous because seat belts cannot be fastened which could lead to serious injury or death during sudden braking or a collision.

Do not allow children to play inside the vehicle with the seatback(s) lowered.
Allowing children to play in the vehicle with the seatback(s) folded down is dangerous. If a child enters the luggage compartment and the seatback(s) were raised back up, the child may become trapped in the luggage compartment which could lead to an accident.

Tightly secure cargo in the luggage compartment when it is transported with the seatback(s) folded down.
Driving without tightly securing cargo and luggage is dangerous as it could move and become an obstruction to driving during emergency braking or a collision resulting in an unexpected accident.

⚠ *WARNING*

When transporting cargo, do not allow the cargo to exceed the height of the seatback(s).
Transporting cargo stacked higher than the seatback(s) is dangerous as visibility to the rear and sides of the vehicle is reduced which could interfere with driving operations and lead to an accident.

Lowering the seatback(s)

⚠ CAUTION

- **(Hatchback)**
  When folding the seatback forward, always support the seatback with your hand. If it is not supported by a hand, fingers or the hand pressing the push knob could be injured.
- Check the position of a front seat before folding a rear seatback. Depending on the position of a front seat, it may not be possible to fold a rear seatback all the way down because it may hit the seatback of the front seat which could scratch or damage the front seat or its pocket. Remove the head restraint on the rear outboard seat if necessary.

(Saloon)

1. If your vehicle is equipped with the head restraint, lower it all the way down.
   Refer to Head Restraints on page 2-11.
2. **(Split-folding type seat)**
   Open the boot lid and pull the lever of the seatback you want to fold down.
   (One-piece folding type seat)
   Open the boot lid and pull the lever of the seatback.

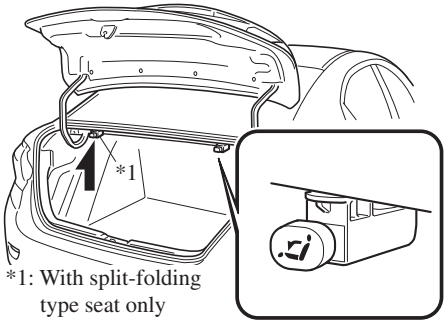

*1: With split-folding type seat only

3. Open a rear door and fold the rear seat forward.

(Hatchback)

1. Lower the head restraint all the way down.
   Refer to Head Restraints on page 2-11.
2. Press the push knob to fold down the seatback.

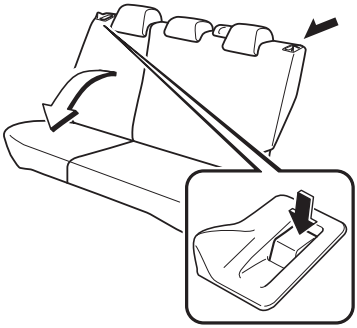

3. Secure the rear seat belt in the belt clip.

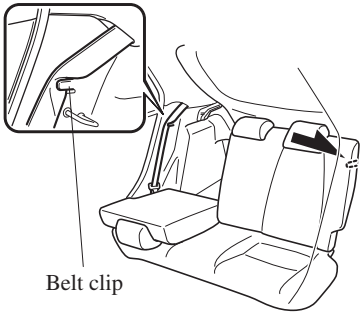

To return the seatback to its upright position:

⚠ *WARNING*

When returning a seatback to its upright position, make sure the 3-point seat belt is not caught in the seatback and the 3-point seat belt is not twisted.
If the seat belt is used while it is twisted and caught in the seatback, the seat belt cannot function at its full capacity, which could cause serious injury or death.

When returning a seatback to its upright position, make sure that it is firmly locked and the red indication is not visible (Hatchback).
If the red indication is visible behind the push knob, it means the seatback is not locked. If the vehicle is driven without the seatback locked, it could fold down suddenly and cause an accident.

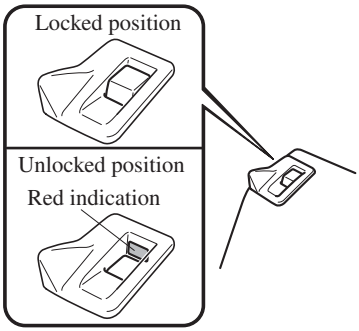

(Saloon)

1. Make sure that the seat belt passes through the seat belt guide correctly and it is not twisted, then raise the seatback while preventing the seat belt from being caught in the seatback.

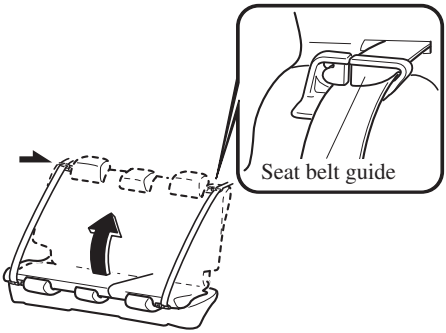

2. Press the seatback rearward and lock it in place. After returning the seatback to its upright position, make sure it is securely locked.

(Hatchback)

1. Verify that the seat belt is secured in the belt clip.

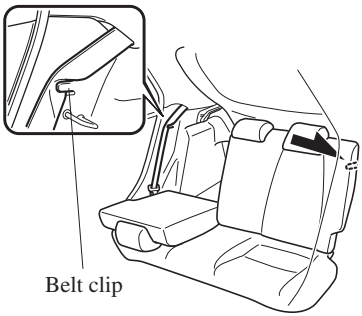

2. Lift the seatback upright.
3. Press the seatback rearward and lock it in place. After returning the seatback to its upright position, make sure it is securely locked.
4. Make sure that the seat belt is neither stuck in the rear seat nor twisted, then remove the seat belt from the belt clip.

Head Restraints

Your vehicle is equipped with head restraints on front seats, rear outboard seats* and the rear centre seat*. The head restraints are intended to help protect you and the passengers from neck injury.

⚠ *WARNING*

Always drive with the head restraints installed when seats are being used and make sure they are properly adjusted. In addition, always raise the head restraints on all rear seat when they are being used:
Driving with the head restraints adjusted too low or removed is dangerous. With no support behind your head, your neck could be seriously injured in a collision.

NOTE

(Some models)
The rear outboard head restraints are non-adjustable.

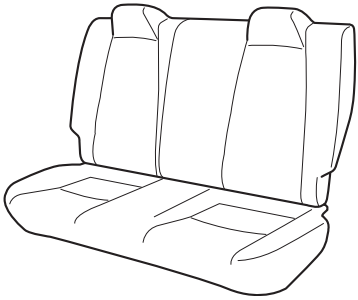

▼Height Adjustment

Adjust the head restraint so that the centre is even with the top of the passenger's ears.

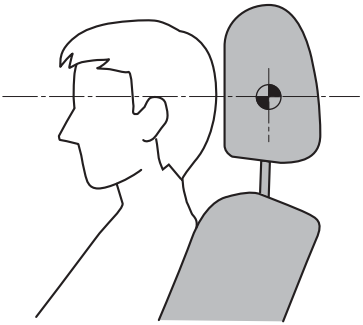

To raise a head restraint, pull it up to the desired position.
To lower the head restraint, press the stop-catch release, then push the head restraint down.

Front outboard seat

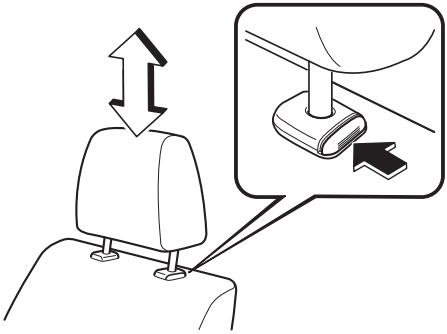

*Some models.

Rear outboard seat*

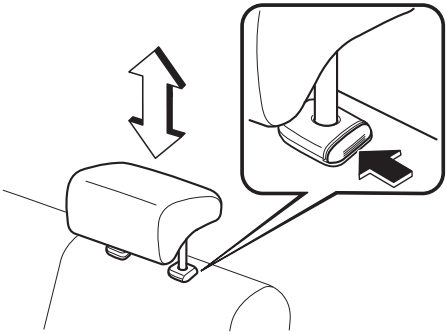

Rear centre seat*

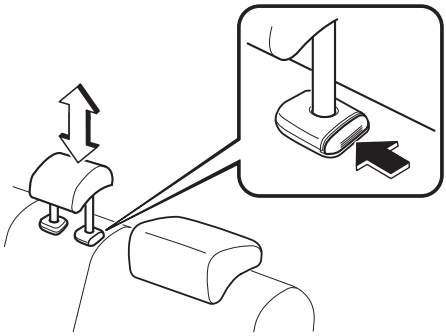

▼Removal/Installation

To remove the head restraint, pull it up while pressing the stop-catch.
To install the head restraint, insert the legs into the holes while pressing the stop-catch.

⚠ *WARNING*

Always drive with the head restraints installed when seats are being used and make sure they are properly installed:
Driving with the head restraints not installed is dangerous. With no support behind your head, your neck could be seriously injured in a collision.

After installing a head restraint, try lifting it to make sure that it does not pull out:
Driving with an unsecured head restraint is dangerous as the effectiveness of the head restraint will be compromised which could cause it to unexpectedly detach from the seat.

⚠ CAUTION

- When installing a head restraint, make sure that it is installed correctly with the front of the head restraint facing forward. If the head restraint is installed incorrectly, it could detach from the seat during a collision and result in injury.
- The head restraints on each of the front and rear seats are specialized to each seat. Do not switch around the head restraint positions. If a head restraint is not installed to its correct seat position, the effectiveness of the head restraint during a collision will be compromised which could cause injury.

*Some models.

Seat Belt Precautions

Seat belts help to decrease the possibility of severe injury during accidents and sudden stops. Mazda recommends that the driver and all passengers always wear seat belts.

Front seat and rear outboard seat

The front seats and rear outboard seats have lap/shoulder belts. These belts have retractors with inertia locks that keep them out of the way when not in use. The locks allow the belts to remain comfortable on users, but they will lock in position during a collision.

Rear centre seat

With 3-point type seat belt

The 3-point type seat belt has lap/shoulder belts. This belt has a retractor with an inertia lock that keeps it out of the way when not in use. The lock allows the belt to remain comfortable on the user, but it will lock in position during a collision.

With 2-point type seat belt

The 2-point type seat belt has a lap belt with manual adjustment.

⚠ *WARNING*

Always wear your seat belt and make sure all occupants are properly restrained:
Not wearing a seat belt is extremely dangerous. During a collision, occupants not wearing seat belts could hit someone or things inside the vehicle or even be thrown out of the vehicle. They could be seriously injured or even killed. In the same collision, occupants wearing seat belts would be much safer.

Do not wear twisted seat belts:
Twisted seat belts are dangerous. In a collision, the full width of the belt is not available to absorb the impact. This puts more force on the bones beneath the belt, which could cause serious injury or death. So, if your seat belt is twisted, you must straighten the seat belt to remove any twists and to allow the full width of the belt to be used.

Never use one seat belt on more than one person at a time:
Using one seat belt for more than one person at a time is dangerous. A seat belt used in this way cannot spread the impact forces properly and the two passengers could be crushed together and seriously injured or even killed. Never use one belt for more than one person at a time and always operate the vehicle with each occupant properly restrained.

Do not operate a vehicle with a damaged seat belt:
Using a damaged seat belt is dangerous. An accident could damage the belt webbing of the seat belt in use. A damaged seat belt cannot provide adequate protection in a collision. Have an expert repairer, we recommend an Authorised Mazda Repairer inspect all seat belt systems in use during an accident before they are used again.

Have your seat belts changed immediately if the pretensioner or load limiter has been expended:
Always have an expert repairer, we recommend an Authorised Mazda Repairer immediately inspect the seat belt pretensioners and air bags after any collision. Like the air bags, the seat belt pretensioners and load limiters will only function once and must be replaced after any collision that caused them to deploy. If the seat belt pretensioners and load limiters are not replaced, the risk of injury in a collision will increase.

Positioning the Shoulder Portion of the Seat Belt:
Improper positioning of the shoulder portion of the seat belt is dangerous. Always make sure the shoulder portion of the seat belt is positioned across your shoulder and near your neck, but never under your arm, on your neck, or on your upper arm.

⚠ *WARNING*

Positioning the Lap Portion of the Seat Belt:
The lap portion of the seat belt worn too high is dangerous. In a collision, this would concentrate the impact force directly on the abdominal area, causing serious injury. Wear the lap portion of the belt snugly and as low as possible.

Instructions for Use of Seat Belt Assemblies:
Seatbelts are designed to bear upon the bony structure of the body, and should be worn low across the front of the pelvis or the pelvis, chest and shoulders, as applicable; wearing the lap section of the belt across the abdominal area must be avoided.
Seatbelts should be adjusted as firmly as possible, consistent with comfort, to provide the protection for which they have been designed. A slack belt will greatly reduce the protection afforded to the wearer.
Care should be taken to avoid contamination of the webbing with polishes, oils and chemicals, and particularly battery acid. Cleaning may safely be carried out using mild soap and water. The belt should be replaced if webbing becomes frayed, contaminated or damaged.
It is essential to replace the entire assembly after it has been worn in a severe impact even if damage to the assembly is not obvious.
Belts should not be worn with straps twisted.
Each belt assembly must only be used by one occupant; it is dangerous to put a belt around a child being carried on the occupant's lap.

No modifications or additions should be made by the user which will either prevent the seat belt adjusting devices from operating to remove slack, or prevent the seat belt assembly from being adjusted to remove slack.

⚠ CAUTION

Belt retraction may become difficult if the belts and rings are soiled, so try to keep them clean. For more details about cleaning the seat belts, refer to "Seat Belt Maintenance" (page 6-74).

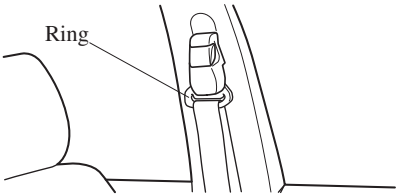

▼Pregnant Women and Persons with Serious Medical Conditions

Pregnant women should always wear seat belts. Ask your doctor for specific recommendations.
The lap belt should be worn SNUGLY AND AS LOW AS POSSIBLE OVER THE HIPS.
The shoulder belt should be worn across your shoulder properly, but never across the stomach area.
Persons with serious medical conditions also should wear seat belts. Check with your doctor for any special instructions regarding specific medical conditions.

▼Emergency Locking Mode

When the seat belt is fastened, it will always be in the emergency locking mode.
In the emergency locking mode, the belt remains comfortable on the occupant and the retractor will lock in position during a collision.
If the belt is locked and cannot be pulled out, retract the belt once, and then try pulling it out slowly. If this fails, pull the belt strongly one time and loosen, then pull it out again slowly.

Seat Belt

▼Fastening the Seat Belt

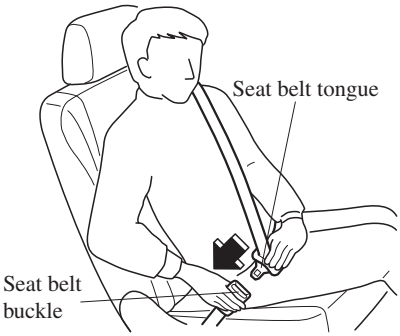

Position the lap belt as low as possible, not on the abdominal area, then adjust the shoulder belt so that it fits snugly against your body.

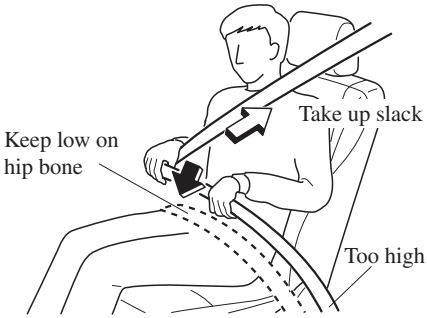

▼Unfastening the Seat Belt

Depress the button on the seat belt buckle. If the belt does not fully retract, pull it out and check for kinks or twists. Then make sure it remains untwisted as it retracts.

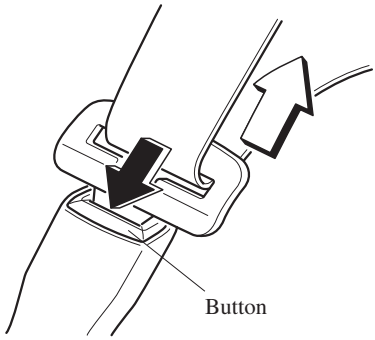

NOTE
If a belt does not fully retract, inspect it for kinks and twists. If it is still not retracting properly, have it inspected at an expert repairer, we recommend an Authorised Mazda Repairer.

▼Front Shoulder Belt Adjuster

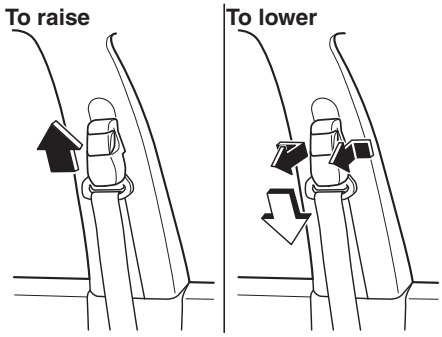

Make sure the adjuster is locked.

Seat Belt Warning Systems

If it detects that the occupant seat belt is unfastened, the warning light or beep alerts the occupant.
Refer to Taking Action on page 7-42.
Refer to Seat Belt Warning Beep on page 7-48.

Seat belt indicator light (rear seat) (green) *

The light turns on when the ignition is switched ON and a rear seat belt is fastened.

Seat Belt Pretensioner and Load Limiting Systems

For optimum protection, the front seat belts and rear outboard seat belts* are equipped with pretensioner and load limiting systems. For both these systems to work properly you must wear the seat belt properly.

Pretensioners:
When a collision is detected, the pretensioners deploy simultaneously with the air bags.
For deployment details, refer to the SRS Air Bag Deployment Criteria (page 2-56).
The seat belt retractors remove slack quickly as the air bags are expanding.
Any time the air bags and seat belt pretensioners have fired they must be replaced.
A system malfunction or operation conditions are indicated by a warning.
Refer to Warning/Indicator Lights on page 4-38.
Refer to Air Bag/Seat Belt Pretensioner System Warning Beep on page 7-48.
(With front passenger air bag deactivation switch)
In addition, the pretensioner system for the front passenger, like the front and side passenger air bag, is designed to only deploy when the front passenger air bag deactivation switch is turned to the ON position.
For details, refer to front passenger air bag deactivation switch (page 2-47).

*Some models.

Load limiter:
The load limiting system releases belt webbing in a controlled manner to reduce belt force on the occupant's chest. While the most severe load on a seat belt occurs in frontal collisions, the load limiter has an automatic mechanical function and can activate in any accident mode with sufficient occupant movement.
Even if the pretensioners have not fired, the load limiting function must be checked by an expert repairer, we recommend an Authorised Mazda Repairer.

⚠ WARNING

Wear seat belts only as recommended in this owner's manual:
Incorrect positioning of the seat belts is dangerous. Without proper positioning, the pretensioner and load limiting systems cannot provide adequate protection in an accident and this could result in serious injury. For more details about wearing seat belts, refer to "Fastening the seat belts" (page 2-17).

Have your seat belts changed immediately if the pretensioner or load limiter has been expended:
Always have an expert repairer, we recommend an Authorised Mazda Repairer immediately inspect the seat belt pretensioners and air bags after any collision. Like the air bags, the seat belt pretensioners and load limiters will only function once and must be replaced after any collision that caused them to deploy. If the seat belt pretensioners and load limiters are not replaced, the risk of injury in a collision will increase.

⚠ WARNING

Do not modify the components or wiring, or use electronic testing devices on the pretensioner system:
Modifying the components or wiring of the pretensioner system, including the use of electronic testing devices is dangerous. You could accidentally activate it or make it inoperable which would prevent it from activating in an accident. The occupants or repairers could be seriously injured.

Properly dispose of the pretensioner system:
Improper disposal of the pretensioner system or a vehicle with non-deactivated pretensioners is dangerous. Unless all safety procedures are followed, injury could result. Have an expert repairer, we recommend an Authorised Mazda Repairer safely dispose of the pretensioner system or scrap a pretensioner system equipped vehicle.

NOTE

- The pretensioner system may not operate depending on the type of the collision. For details, refer to the SRS Air Bag Deployment Criteria (page 2-56).
- Some smoke (non-toxic gas) will be released when the air bags and pretensioners deploy. This does not indicate a fire. This gas normally has no effect on occupants, however, those with sensitive skin may experience light skin irritation. If residue from the deployment of the air bags or the pretensioner system gets on the skin or in the eyes, wash it off as soon as possible.

Centre-Rear Position Seat Belt*

▼Fastening the Seat Belt

1. Pull the seat belt tongue to the desired length.
2. Insert it into the seat belt buckle until you hear a click sound.

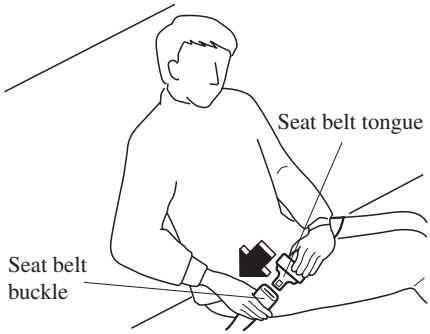

*Some models.

3. Adjust the belt length.
   To lengthen the belt, hold the seat belt tongue at a right angle to the webbing and pull. To shorten, pull the loose end of the webbing.

Lengthen

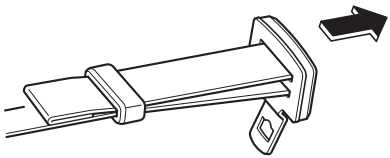

Shorten

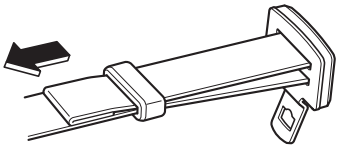

4. Make sure the lap belt is snugly fitted against your body.

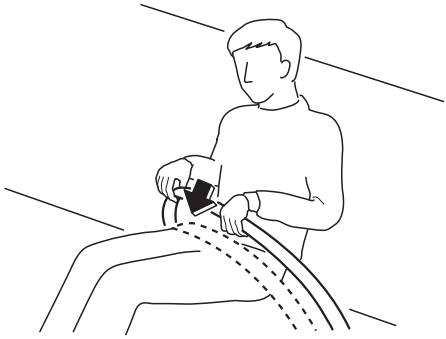

⚠ *WARNING*

Wearing the Lap Belt:
A lap belt worn too high is dangerous. In a collision, this would concentrate the impact force directly on the abdominal area, causing serious injury. Wear the lap belt snugly and as low as possible.

▼Unfastening the Seat Belt

Depress the button on the seat belt buckle.

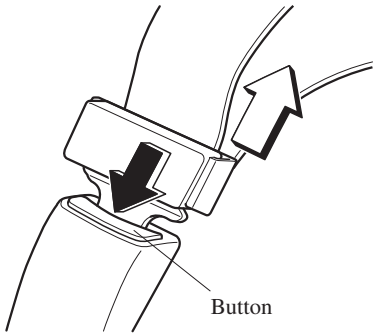

Child-Restraint Precautions

Mazda strongly urges the use of child-restraint systems for children small enough to use them.
Mazda recommends use of a Mazda genuine child-restraint system or one that complies with the UNECE*1 44 regulation. If you would like to purchase a Mazda genuine child-restraint system, please contact an Authorised Mazda Dealer.
Check your local and state or provincial laws for specific requirements regarding the safety of children riding in your vehicle.

*1 UNECE stands for United Nations Economic Commission for Europe.

Whatever child-restraint system you consider, please pick the appropriate one for the age and size of the child, obey the law and follow the instructions that come with the individual child-restraint system.

A child who has outgrown child-restraint systems should sit in the rear and use seat belts.

The child-restraint system should be installed on the rear seat.
Statistics confirm that the rear seat is the best place for all children up to 12 years of age-the more so with a supplementary restraint system (air bags).

A rear-facing child-restraint system should **NEVER** be used in the front passenger seat with the air bag system activated. The front passenger's seat is also the least preferred seat for other child-restraint systems.

For some models, we have provided a deactivation switch that will disable front passenger air bag inflation. Do not switch off the front passenger air bag without reading the “Front Passenger Air Bag Deactivation Switch” (page 2-47).

⚠ *WARNING*

Use the correct size child-restraint system:
For effective protection in vehicle accidents and sudden stops, a child must be properly restrained using a seat belt or child-restraint system depending on age and size. If not, the child could be seriously injured or even killed in an accident.

Follow the manufacturer's instructions and always keep the child-restraint system buckled down:
An unsecured child-restraint system is dangerous. In a sudden stop or a collision it could move causing serious injury or death to the child or other occupants. Make sure any child-restraint system is properly secured in place according to the child-restraint system manufacturer's instructions. When not in use, remove it from the vehicle or fasten it with a seat belt, or latch it down to BOTH ISOFIX anchors, and attach the corresponding tether anchor.

Always secure a child in a proper child-restraint system:
Holding a child in your arms while the vehicle is moving is extremely dangerous. No matter how strong the person may be, he or she cannot hold onto a child in a sudden stop or collision and it could result in serious injury or death to the child or other occupants. Even in a moderate accident, the child may be exposed to air bag forces that could result in serious injury or death to the child, or the child may be slammed into an adult, causing injury to both child and adult.

Extreme Hazard! Never use a rear-facing child-restraint system on the front passenger seat with an air bag that could deploy:
NEVER use a rearward facing child restraint on a seat protected by an ACTIVE AIRBAG in front of it, DEATH or SERIOUS INJURY to the CHILD can occur. Vehicles with a front passenger air bag have a warning label attached as shown below. The warning label reminds you not to put a rear-facing child-restraint system on the front passenger seat at any time.

(Except Taiwan)

(Taiwan)

Child Restraint

⚠ *WARNING*

Even in a moderate collision, the child-restraint system can be hit by a deploying air bag and moved violently backward resulting in serious injury or death to the child. If your vehicle is equipped with a front passenger air bag deactivation switch, always set the switch to the OFF position when installing a rear-facing child-restraint system on the front passenger seat.

Do not install a front-facing child-restraint system on the front passenger seat unless it is unavoidable:
In a collision, the force of a deploying air bag could cause serious injury or death to the child. If installing a front-facing child-restraint system on the front passenger seat is unavoidable, move the front passenger seat as far back as possible and make sure that the front passenger air bag deactivation switch is in the OFF position. Refer to Front Passenger Air Bag Deactivation Switch (page 2-47).

⚠ *WARNING*

Do not allow a child or anyone to lean over or against the side window of a vehicle with side and curtain air bags:
It is dangerous to allow anyone to lean over or against the side window, the area of the front passenger seat, the front and rear window pillars and the roof edge along both sides from which the side and curtain air bags deploy, even if a child-restraint system is used. The impact of inflation from a side or curtain air bag could cause serious injury or death to an out of position child. Furthermore, leaning over or against the front door could block the side and curtain air bags and eliminate the advantages of supplementary protection. With the front air bag and the additional side air bag that comes out of the front seat, the rear seat is always a better location for children. Take special care not to allow a child to lean over or against the side window, even if the child is seated in a child-restraint system.

Never use one seat belt on more than one person at a time:
Using one seat belt for more than one person at a time is dangerous. A seat belt used in this way cannot spread the impact forces properly and the two passengers could be crushed together and seriously injured or even killed. Never use one belt for more than one person at a time and always operate the vehicle with each occupant properly restrained.

Use the tether and tether anchor only for a child-restraint system:
Child-restraint system anchorages are designed to withstand only those loads imposed by correctly installed child-restraint systems. Under no circumstances are they to be used for adult seat belts, harnesses, or for attaching other items or equipment to the vehicle.

Always remove the head restraint and install child-restraint system:
Installing a child-restraint system without removing the head restraint is dangerous. The child-restraint system cannot be installed correctly which may result in death or injury to the child in a collision.

⚠ CAUTION

A seat belt or child-restraint system can become very hot in a closed vehicle during warm weather. To avoid burning yourself or a child, check them before you or your child touches them.

NOTE
Your Mazda is equipped with ISOFIX anchors for attachment of ISOFIX child-restraint systems in the rear. When using these anchors to secure a child-restraint system, refer to “ISOFIX Anchor-Secured Child-Restraint Systems” (page 2-38).

Child-Restraint System Installation

▼Categories of Child-Restraint Systems

NOTE
When purchasing, ask the manufacturer of the child-restraint system which type of child-restraint system is appropriate for your child and vehicle.

(Europe)
Child-restraint systems are classified into the following 5 groups according to the UNECE 44 regulation.

Group	Age	Weight
0	Up to 9 months old	Less than 10 kg (less than 22 lb)
0+	Up to 2 years old	Less than 13 kg (less than 29 lb)
1	8 months to 4 years old	9 kg — 18 kg (20 lb — 40 lb)
2	3 to 7 years old	15 kg — 25 kg (33 lb — 55 lb)
3	6 to 12 years old	22 kg — 36 kg (48 lb — 79 lb)

(Other countries)
Please comply with the legal regulations concerning the use of child-restraint systems in your country.

▼Child-Restraint System Types

(Europe)
In this owner's manual, explanation of child-restraint systems secured with seat belts is provided for the following three types of popular child-restraint systems: baby seat, child seat, junior seat.

NOTE

- Installation position is determined by the type of child-restraint system. Always read the manufacturer's instructions and this owner's manual carefully.
- Due to variations in the design of child-restraint systems, vehicle seats and seat belts, all child-restraint systems may not fit all seating positions. Before purchasing a child-restraint system, it should be tested in the specific vehicle seating position (or positions) where it is intended to be used. If a previously purchased child-restraint system does not fit, you may need to purchase a different one that will.

Baby seat

Equal to Group 0 and 0+ of the UNECE 44 regulation.

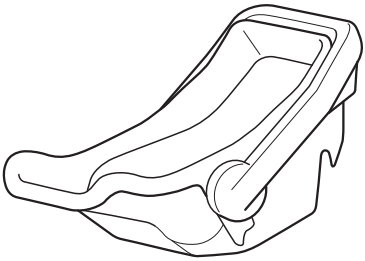

Child seat
Equal to Group 1 of the UNECE 44 regulation.

Junior seat
Equal to Group 2 and 3 of the UNECE 44 regulation.

(Other countries)
Please comply with the legal regulations concerning the use of child-restraint systems in your country.

▼Baby Seat Installation Position

A baby seat is used in the rear-facing position only.

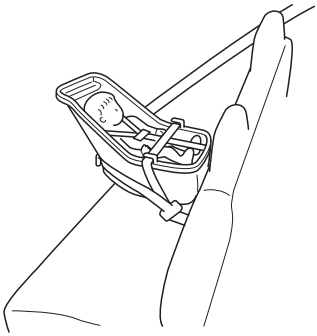

Refer to the table, “Child-Restraint System Suitability for Various Seat Positions” for baby seat installation position (page 2-32).

⚠ WARNING

Always install a baby seat in the correct seat position:
Installing a baby seat without first consulting the table “Child-Restraint System Suitability for Various Seat Positions” is dangerous. A baby seat installed on the wrong seat position cannot be properly secured. In a collision, the child could hit something or someone in the vehicle and be seriously injured or even killed.

⚠ WARNING

Never use a rear-facing child-restraint system on the front passenger seat protected by an air bag:
NEVER use a rearward facing child restraint on a seat protected by an ACTIVE AIRBAG in front of it, DEATH or SERIOUS INJURY to the CHILD can occur.
The child-restraint system can be hit by the deploying air bag and knocked out of position. A child in the child-restraint system could be seriously injured or killed. If your vehicle is equipped with a front passenger air bag deactivation switch, always set the switch to the OFF position if installing a rear-facing child-restraint system on the front passenger seat is unavoidable.

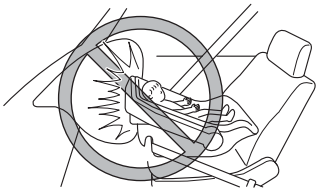

▼Child Seat Installation Position

A child seat is used in front-facing and rear-facing positions depending on the age and size of the child. When installing, follow the manufacturer's instructions in accordance with the appropriate age and size of the child as well as the directions for installing the child-restraint system. Refer to the table, “Child-Restraint System Suitability for Various Seat Positions” for child seat installation position (page 2-32).

Rear-facing type

⚠ WARNING

Always install a front-facing child seat in the correct seat position:
Installing a front-facing child seat without first consulting the table "Child-Restraint System Suitability for Various Seat Positions" is dangerous. A front-facing child seat installed on the wrong seat position cannot be properly secured. In a collision, the child could hit something or someone in the vehicle and be seriously injured or even killed.

Never use a rear-facing child-restraint system on the front passenger seat protected by an air bag:
NEVER use a rearward facing child restraint on a seat protected by an ACTIVE AIRBAG in front of it, DEATH or SERIOUS INJURY to the CHILD can occur.
The child-restraint system can be hit by the deploying air bag and knocked out of position. A child in the child-restraint system could be seriously injured or killed. If your vehicle is equipped with a front passenger air bag deactivation switch, always set the switch to the OFF position if installing a rear-facing child-restraint system on the front passenger seat is unavoidable.

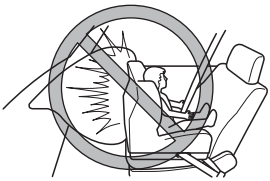

Front-facing type

⚠ WARNING

Never install a front-facing child seat in the wrong seat position:
Installing a front-facing child seat without first consulting the table "Child-Restraint System Suitability for Various Seat Positions" is dangerous. A front-facing child seat installed in the wrong seat position cannot be properly secured. In a collision, the child could hit something or someone in the vehicle and be seriously injured or even killed.

Do not install a front-facing child-restraint system on the front passenger seat unless it is unavoidable:
In a collision, the force of a deploying air bag could cause serious injury or death to the child. If installing a front-facing child-restraint system on the front passenger seat is unavoidable, move the front passenger seat as far back as possible and make sure that the front passenger air bag deactivation switch is in the OFF position. Refer to Front Passenger Air Bag Deactivation Switch (page 2-47).

▼ Junior Seat Installation Position

A junior seat is used in the front-facing position only.

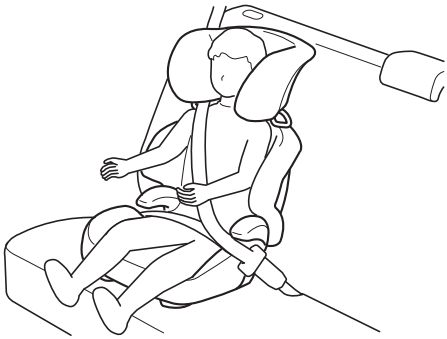

Refer to the table, “Child-Restraint System Suitability for Various Seat Positions” for junior seat installation position (page 2-32).

⚠ *WARNING*

Always install a junior seat in the correct seat position:
Installing a junior seat without first consulting the table “Child-Restraint System Suitability for Various Seat Positions” is dangerous. A junior seat installed on the wrong seat position cannot be properly secured. In a collision, the child could hit something or someone in the vehicle and be seriously injured or even killed.

⚠ *WARNING*

Do not install a front-facing child-restraint system on the front passenger seat unless it is unavoidable:
In a collision, the force of a deploying air bag could cause serious injury or death to the child. If installing a front-facing child-restraint system on the front passenger seat is unavoidable, move the front passenger seat as far back as possible and make sure that the front passenger air bag deactivation switch is in the OFF position. Refer to Front Passenger Air Bag Deactivation Switch (page 2-47).

Child-Restraint System Suitability for Various Seat Positions Table

(Europe and countries conforming to the UNECE 16 regulation)
Provided information in the table shows your child-restraint system suitability for various seating position. For installation suitability of other manufacturer child-restraint system, carefully consult the manufacturer's instructions which accompany the child-restraint system.
When installing a child-restraint system, the following points must be observed:

- If the child-restraint system does not fit into the seatback because of the head restraint, adjust the head restraint or remove the head restraint so that the child-restraint system fits into the seatback.
  Refer to Head Restraints on page 2-11.
- When installing a child-restraint system to the rear seat, adjust the front seat position so that the front seat does not contact the child-restraint system.
  Refer to Seat Operation on page 2-5.
- When installing a child-restraint system came equipped with a tether, remove the head restraint.
  Refer to Head Restraints on page 2-11.

ISOFIX anchor-secured child-restraint systems

When installing a child-restraint system to the rear seat, refer to the child-restraint system manufacturer's instructions and the Using ISOFIX Anchor on page 2-38.

Mass group	Size Class	Fixture	Seat Positions		
			Vehicle ISOFIX positions	Rear seat (centre)	Front passenger seat (outboard)
			Rear seat (outboard)		
Carrycot	F	ISO/L1	X	X	X
	G	ISO/L2	X	X	X
		(1)	X	X	X
GROUP 0 Up to 10 kg (less than 22 lb)	E	ISO/R1	IL	X	X
		(1)	X	X	X
GROUP 0+ Up to 13 kg (less than 29 lb)	E	ISO/R1	IL	X	X
	D	ISO/R2	IL	X	X
	C	ISO/R3	IL	X	X
		(1)	X	X	X

Mass group	Size Class	Fixture	Seat Positions		
			Vehicle ISOFIX positions	Rear seat (centre)	Front passenger seat (outboard)
			Rear seat (outboard)		
GROUP 1 9 kg — 18 kg (20 lb — 40 lb)	D	ISO/R2	IL	X	X
	C	ISO/R3	IL	X	X
	B	ISO/F2	IUF	X	X
	B1	ISO/F2X	IUF	X	X
	A	ISO/F3	IUF	X	X
		(1)	X	X	X
GROUP 2 15 kg — 25 kg (33 lb — 55 lb)		(1)	X	X	X
GROUP 3 22 kg — 36 kg (48 lb — 79 lb)		(1)	X	X	X

(1) For the CRS which do not carry the ISO/XX size class identification (A to G), for the applicable mass group, the car manufacturer shall indicate the vehicle specific ISOFIX child-restraint system(s) recommended for each position.

Key of letters to be inserted in the above table:

IUF = suitable for ISOFIX forward child-restraints systems of universal category approved for use in this mass group.

IL = suitable for particular ISOFIX child-restraint systems (CRS).

These ISOFIX CRS are those of the “specific vehicle”, “restricted” or “semi-universal” categories.

A Mazda genuine child-restraint system can be installed. Regarding child-restraint systems which can be installed, refer to the accessories catalog.

(Except Europe)

Regarding child-restraint systems which can be installed to your Mazda, consult an expert repairer, we recommend an Authorised Mazda Repairer.

X = ISOFIX position not suitable for ISOFIX child-restraint systems in this mass group and/or this size class.

i-Size child-restraint systems

Vehicles with the mark indicated on the front surface of a rear seatback are i-Size child-restraint certified.
When installing a child-restraint system to the rear seat, refer to the child-restraint system manufacturer's instructions and the Using ISOFIX Anchor on page 2-38.

Marking location

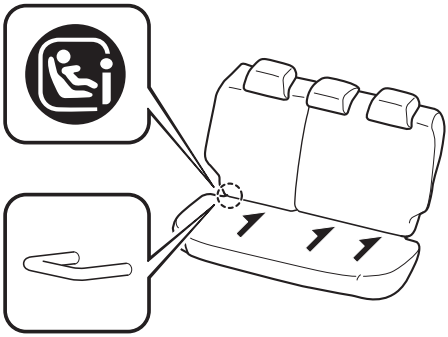

An i-Size child-restraint system can be installed to the specified seat as follows:

	Front passenger seat	Rear seat (outboard)	Rear seat (centre)
i-Size child-restraint systems	X	i-U	X

Key of letters to be inserted in the above table:
i-U = Suitable for i-Size “universal” child-restraint systems forward and rearward facing.
X = Seating position not suitable for i-Size “universal” child-restraint systems.

NOTE

- An i-Size child-restraint system refers to a child-restraint system which has acquired i-Size category certification for the UNECE 129 regulation.
- Vehicles with the mark indicated on the front surface of a rear seatback are not i-Size child-restraint certified.

Seat belt-secured child-restraint systems

System group	Age group	Weight group	Child-restraint system type	Front passenger seat			Rear seat (outboard)	Rear seat (centre)
				Without air bag deactivation switch	With air bag deactivation switch			
					ON (Air bag enabled)	OFF (Air bag disabled)		
GROUP 0	Up to approximately 9 months old	Less than 10 kg (less than 22 lb)	Baby seat	X	X	U	U	X
GROUP 0+	Up to approximately 2 years old	Less than 13 kg (less than 29 lb)	Baby seat	X	X	U	U	X
GROUP 1	Approximately 8 months to 4 years old	9 kg — 18 kg (20 lb — 40 lb)	Child seat	UF	UF	U	U	X
GROUP 2	Approximately 3 to 7 years old	15 kg — 25 kg (33 lb — 55 lb)	Junior seat	UF	UF	U	U	X
GROUP 3	Approximately 6 to 12 years old	22 kg — 36 kg (48 lb — 79 lb)	Junior seat	UF	UF	U	U	X

Key of letters to be inserted in the above table:
U = Suitable for “universal” category restraints approved for use in this mass group.
UF = Suitable for forward-facing “universal” category restraints approved for use in this mass group.
X = Seat position not suitable for children in this mass group.

(Other countries)
Please comply with the legal regulations concerning the use of child-restraint systems in your country.

Installing Child-Restraint Systems

▼Anchor Bracket

Anchor brackets for securing child-restraint systems are equipped in the vehicle. Locate each anchor position using the illustration.
To install a child-restraint system, if the seat is equipped with a head restraint, remove it. Always follow the instruction manual accompanying the child-restraint system.

Anchor bracket location
Use the indicated anchor bracket locations when installing a child-restraint system equipped with a tether.

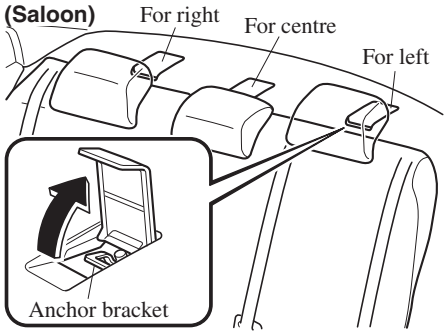

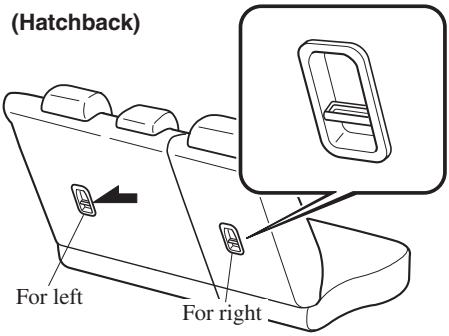

⚠ *WARNING*

Always attach the tether strap to the correct tether anchor position:
Attaching the tether strap to the incorrect tether anchor position is dangerous. In a collision, the tether strap could come off and loosen the child-restraint system. If the child-restraint system moves it could result in death or injury to the child.

⚠ WARNING

Always remove the head restraint and install child-restraint system:
Installing a child-restraint system without removing the head restraint is dangerous. The child-restraint system cannot be installed correctly which may result in death or injury to the child in a collision.

(Saloon)

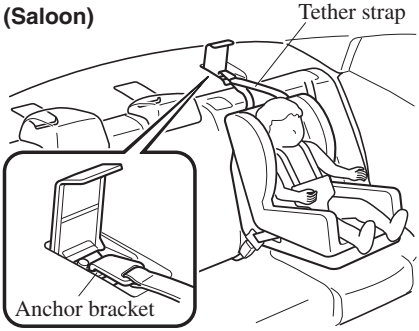

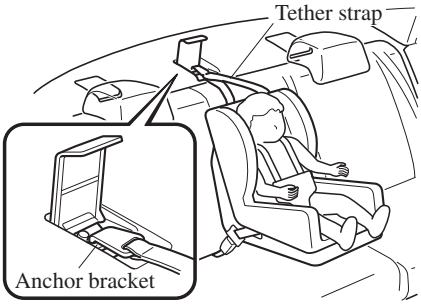

⚠ WARNING

(Hatchback)

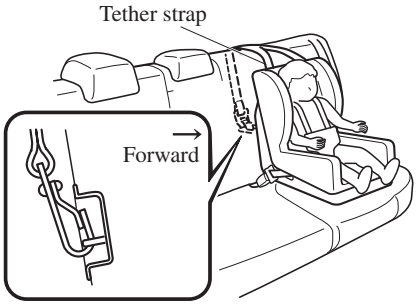

Always install the head restraint and adjust it to the appropriate position after removing the child-restraint system:
Driving with the head restraint removed is dangerous as impact to the occupant's head cannot be prevented during emergency braking or in a collision, which could result in a serious accident, injury or death.
Refer to Head Restraints on page 2-11.

▼Using the Seat Belt

When installing a child-restraint system, follow the installation instructions included with the product.
In addition, if the seat is equipped with a head restraint, remove it.

▼Using ISOFIX Anchor

⚠ WARNING

Follow the manufacturer's instructions for the use of the child-restraint system:
An unsecured child-restraint system is dangerous. In a sudden stop or a collision it could move causing serious injury or death to the child or other occupants. Make sure any child-restraint system is properly secured in place according to the manufacturer's instructions.

Make sure the child-restraint system is properly secured:
A child-restraint system that is not secured is dangerous. In a sudden stop or collision, it can become a projectile and hit someone, causing serious injury. When not in use, remove it from the vehicle, put it in the luggage compartment or at least make sure it is securely fastened to the ISOFIX anchors.

⚠ WARNING

Make sure there are no seat belts or foreign objects near or around the ISOFIX anchor-secured child-restraint system:
Not following the child-restraint system manufacturer's instructions when installing the child-restraint system is dangerous. If seat belts or a foreign object prevent the child-restraint system from being securely attached to the ISOFIX anchors and the child-restraint system is installed improperly, the child-restraint system could move in a sudden stop or collision causing serious injury or death to the child or other occupants. When installing the child-restraint system, make sure there are no seat belts or foreign objects near or around the ISOFIX anchors. Always follow the child-restraint system manufacturer's instructions.

1. First, adjust the front seat to allow clearance between the child-restraint system and the front seat (page 2-5).
2. Make sure the seatback is securely latched by pushing it back until it is fully locked.

3. Expand the open seams on the rear of the seat bottom slightly to verify the locations of the ISOFIX anchor.

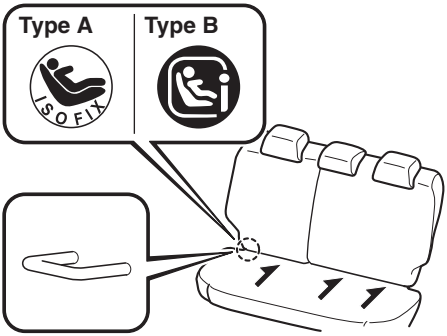

NOTE

The markings above the ISOFIX anchors indicate the locations of the ISOFIX anchors for the attachment of a child-restraint system.

4. If the seat is equipped with a head restraint, remove it.
   Refer to Head Restraints on page 2-11.
5. Secure the child-restraint system using the ISOFIX anchor, following the child-restraint system manufacturer's instruction.
6. If your child-restraint system came equipped with a tether, that probably means it is very important to properly secure the tether for child safety. Please carefully follow the child-restraint system manufacturer's instructions when installing tethers (page 2-36).

⚠ *WARNING*

Always attach the tether strap to the correct tether anchor position:
Attaching the tether strap to the incorrect tether anchor position is dangerous. In a collision, the tether strap could come off and loosen the child-restraint system. If the child-restraint system moves it could result in death or injury to the child.

Always remove the head restraint and install child-restraint system:
Installing a child-restraint system without removing the head restraint is dangerous. The child-restraint system cannot be installed correctly which may result in death or injury to the child in a collision.

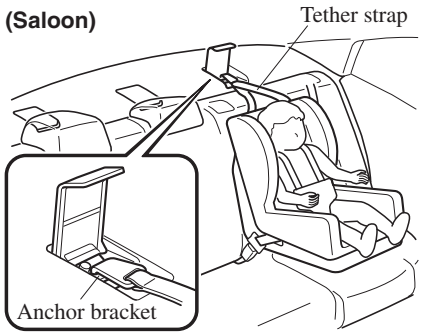

⚠ *WARNING*

(Hatchback)

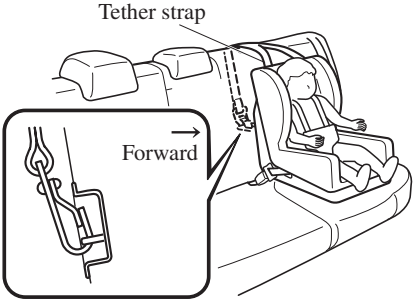

Always install the head restraint and adjust it to the appropriate position after removing the child-restraint system:
Driving with the head restraint removed is dangerous as impact to the occupant's head cannot be prevented during emergency braking or in a collision, which could result in a serious accident, injury or death.
Refer to Head Restraints on page 2-11.

Supplementary Restraint System (SRS) Precautions

The front and side supplementary restraint systems (SRS) include different types of air bags. **Please verify which kinds of air bags are equipped on your vehicle by locating the "SRS AIRBAG" location indicators.** These indicators are visible in the area where the air bags are installed.
The air bags are installed in the following locations:

- The steering wheel hub (driver air bag)
- The front passenger instrument panel (front passenger air bag)
- The outboard sides of the front seatbacks (side air bags)*
- The front and rear window pillars, and the roof edge along both sides (curtain air bags)*

The air bag supplementary restraint systems are designed to provide supplementary protection in certain situations so seat belts are always important in the following ways:

Without seat belt usage, the air bags cannot provide adequate protection during an accident. Seat belt usage is necessary to:

- Keep the occupant from being thrown into an inflating air bag.
- Reduce the possibility of injuries during an accident that is not designed for air bag inflation, such as roll-over or rear impact.
- Reduce the possibility of injuries in frontal, near frontal or side collisions that are not severe enough to activate the air bags.
- Reduce the possibility of being thrown from your vehicle.
- Reduce the possibility of injuries to lower body and legs during an accident because the air bags provide no protection to these parts of the body.
- Hold the driver in a position which allows better control of the vehicle.

A child who is too small to use a seat belt must be properly secured using a child-restraint system (page 2-22).

Carefully consider which child-restraint system is necessary for your child and follow the installation directions in this Owner's Manual as well as the child-restraint system manufacturer's instructions.

*Some models.

⚠ *WARNING*

Seat belts must be worn in air bag equipped vehicles:
Depending only on the air bags for protection during an accident is dangerous. Alone, air bags may not prevent serious injuries. The appropriate air bags can be expected to inflate only in the first accident, such as frontal, near frontal or side collisions that are at least moderate. Vehicle occupants should always wear seat belts.

Children should not ride in the front passenger seat:
Placing a child, 12 years or under, in the front seat is dangerous. The child could be hit by a deploying air bag and be seriously injured or even killed. A sleeping child is more likely to lean against the door and be hit by the side air bag in moderate collision to the front-passenger side of the vehicle. Whenever possible, always secure a child 12 years and under on the rear seats with an appropriate child-restraint system for the child's age and size.

Extreme Hazard! Never use a rear-facing child-restraint system on the front passenger seat with an air bag that could deploy:
NEVER use a rearward facing child restraint on a seat protected by an ACTIVE AIRBAG in front of it, DEATH or SERIOUS INJURY to the CHILD can occur.
Even in a moderate collision, the child-restraint system can be hit by a deploying air bag and moved violently backward resulting in serious injury or death to the child. If your vehicle is equipped with a front passenger air bag deactivation switch, always set the switch to the OFF position when installing a rear-facing child-restraint system on the front passenger seat.

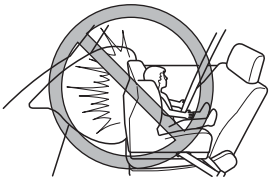

Do not sit too close to the driver and front passenger air bags:
Sitting too close to the driver and front passenger air bag modules or placing hands or feet on them is extremely dangerous. The driver and front passenger air bags inflate with great force and speed. Serious injuries could occur if someone is too close. The driver should always hold onto only the rim of the steering wheel. The front seat passenger should keep both feet on the floor. Front seat occupants should adjust their seats as far back as possible and always sit upright against the seatbacks with seat belts worn properly.

⚠ *WARNING*

Sit in the centre of the seat and wear seat belts properly:
Sitting too close to the side air bag modules or placing hands on them, or sleeping up against the door or hanging out the windows is extremely dangerous. The side and curtain air bags inflate with great force and speed directly expanding along the door on the side the car is hit. Serious injury could occur if someone is sitting too close to the door or leaning against a window, or if rear seat occupants grab the sides of the front seatbacks. Give the side and curtain air bags room to work by sitting in the centre of the seat while the vehicle is moving with seat belts worn properly.

Do not attach objects on or around the area where driver and front passenger air bags deploy:
Attaching an object to the driver and front passenger air bag modules or placing something in front of them is dangerous. In an accident, an object could interfere with air bag inflation and injure the occupants.

Do not attach objects on or around the area where a side air bag deploys:
Attaching objects to the front seat in such a way as to cover the outboard side of the seat in any way is dangerous. In an accident the object could interfere with the side air bag, which inflates from the outboard side of the front seats, impeding the added protection of the side air bag system or redirecting the air bag in a way that is dangerous. Furthermore, the bag could be cut open releasing the gas.
Do not hang net bags, map pouches or backpacks with side straps on the front seats. Never use seat covers on the front seats. Always keep the side air bag modules in your front seats free to deploy in the event of a side collision.

Do not attach objects on or around the area where a curtain air bag deploys:
Attaching objects to the areas where the curtain air bag activates such as on the windscreen glass, side door glass, front and rear window pillars and along the roof edge and assist grips is dangerous. In an accident the object could interfere with the curtain air bag, which inflates from the front and rear window pillars and along the roof edge, impeding the added protection of the curtain air bag system or redirecting the air bag in a way that is dangerous. Furthermore, the bag could be cut open releasing the gas.
Do not place hangers or any other objects on the assist grips. When hanging clothes, hang them on the coat hook directly. Always keep the curtain air bag modules free to deploy in the event of a side collision.

⚠ *WARNING*

Do not touch the components of the supplementary restraint system after the air bags have inflated:
Touching the components of the supplementary restraint system after the air bags have inflated is dangerous. Immediately after inflation, they are very hot. You could get burned.

Never install any front-end equipment to your vehicle:
Installation of front-end equipment, such as frontal protection bar (kangaroo bar, bull bar, push bar, or other similar devices), snowplow, or winches, is dangerous. The air bag crash sensor system could be affected. This could cause air bags to inflate unexpectedly, or it could prevent the air bags from inflating during an accident. Front occupants could be seriously injured.

Do not modify the suspension:
Modifying the vehicle suspension is dangerous. If the vehicle's height or the suspension is modified, the vehicle will be unable to accurately detect a collision resulting in incorrect or unexpected air bag deployment and the possibility of serious injuries.

Do not modify a front door or leave any damage unrepaired. Always have an expert repairer, we recommend an Authorised Mazda Repairer inspect a damaged front door:
Modifying a front door or leaving any damage unrepaired is dangerous. Each front door has a side crash sensor as a component of the supplementary restraint system. If holes are drilled in a front door, a door speaker is left removed, or a damaged door is left unrepaired, the sensor could be adversely affected causing it to not detect the pressure of an impact correctly during a side collision. If a sensor does not detect a side impact correctly, the side and curtain air bags and the front seat belt pretensioner may not operate normally which could result in serious injury to occupants.

Do not modify the supplementary restraint system:
Modifying the components or wiring of the supplementary restraint system is dangerous. You could accidentally activate it or make it inoperable. Do not make any modifications to the supplementary restraint system. This includes installing trim, badges, or anything else over the air bag modules. It also includes installing extra electrical equipment on or near system components or wiring. An expert repairer, we recommend an Authorised Mazda Repairer can provide the special care needed in the removal and installation of front seats. It is important to protect the air bag wiring and connections to assure that the bags do not accidentally deploy, and that the driver seat slide position sensor is not damaged and the seats retain an undamaged air bag connection.

⚠ *WARNING*

Do not place luggage or other objects under the front seats:
Placing luggage or other objects under the front seats is dangerous. The components essential to the supplementary restraint system could be damaged, and in the event of a side collision, the appropriate air bags may not deploy, which could result in death or serious injury. To prevent damage to the components essential to the supplementary restraint system, do not place luggage or other objects under the front seats.

Do not operate a vehicle with damaged air bag/seat belt pretensioner system components:
Expended or damaged air bag/seat belt pretensioner system components must be replaced after any collision which caused them to deploy or damage them. Only a trained expert repairer, we recommend an Authorised Mazda Repairer can fully evaluate these systems to see that they will work in any subsequent accident. Driving with an expended or damaged air bag or pretensioner unit will not afford you the necessary protection in the event of any subsequent accident which could result in serious injury or death.

Do not remove interior air bag parts:
Removing any components such as the front seats, front instrument panel, the steering wheel or parts on the front and rear window pillars and along the roof edge, containing air bag parts or sensors is dangerous. These parts contain essential air bag components. The air bag could accidentally activate and cause serious injuries. Always have an Authorised Mazda Repairer remove these parts.

Properly dispose of the air bag system:
Improper disposal of an air bag or a vehicle with live air bags in it can be extremely dangerous. Unless all safety procedures are followed, injury could result. Have an expert repairer, we recommend an Authorised Mazda Repairer safely dispose of the air bag system or scrap an air bag equipped vehicle.

NOTE

- When an air bag deploys, a loud inflation noise can be heard and some smoke will be released. Neither is likely to cause injury, however, the texture of the air bags may cause light skin injuries on body parts not covered with clothing through friction.
- Should you sell your Mazda, we urge you to tell the new owner of its air bag systems and that familiarization with all instructions about them, from the Owner's Manual, is important.
- This highly-visible label warns against the use of a rear-facing child-restraint system on the front passenger seat.

(Except Taiwan)

(Taiwan)

Front Passenger Air Bag Deactivation Switch*

⚠ *WARNING*

Do not deactivate the front passenger air bag unnecessarily:
Unnecessary deactivation of the front passenger air bag is dangerous. If turned off unnecessarily, the front passenger will not receive the added protection of the air bag. Serious injuries or even death could occur. With the exception of installing a child-restraint system on the front passenger seat, do not turn the air bag deactivation switch to the OFF position.

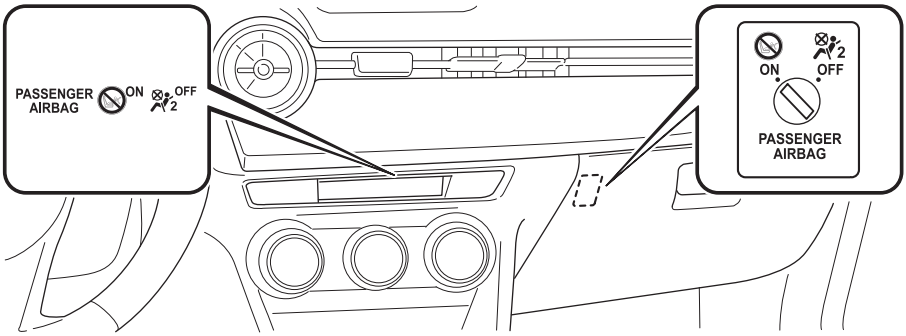

The front passenger air bag deactivation switch should be used to deactivate the front passenger front and side air bags and also the front passenger seat belt pretensioner system if installing a child-restraint system on the front passenger seat.

*Some models.

When the ignition is switched ON, both front passenger air bag deactivation indicator lights illuminate regardless of the front passenger air bag deactivation switch position. The indicator light turns off after a specified period of time, then turns on/off depending on the conditions as indicated in the following table.

Front Passenger Air Bag Deactivation Switch	Front Passenger Seat/Side Air Bag, Front Passenger Seat Belt Pretensioner Operation Condition	Front Passenger Air Bag Deactivation Indicator Light
OFF position	Deactivate	
ON position	Ready	Turns off after a short period of time.

NOTE

Have the front passenger air bag deactivation switch inspected by an expert repairer, we recommend an Authorised Mazda Repairer if any of these conditions occur:

- The front passenger air bag deactivation indicator light does not illuminate for a specified period of time when the ignition is switched ON.
- The front passenger air bag deactivation indicator light does not turn off after a short period of time when the ignition is switched ON (front passenger air bag deactivation switch is in ON position).

▼Switch Positions

Before driving, always confirm that the front passenger air bag deactivation switch is in the appropriate position using the auxiliary key according to your requirements.

⚠ *WARNING*

Do not leave the key in the front passenger air bag deactivation switch:
Unintentional deactivation of the front passenger air bag is dangerous. In an accident, the front passenger will not be properly protected. Serious injuries or even death could occur. To avoid unintentional deactivation, always use the auxiliary key stored in the transmitter body currently being used to operate the front passenger air bag deactivation switch. After deactivating the air bag, put the auxiliary key back into the transmitter body. That way you will not leave the key in the front passenger air bag deactivation switch.

NOTE

After operating the front passenger air bag deactivation switch, put the auxiliary key back into the transmitter body.

OFF

Front passenger front air bag, side air bag, and front passenger seat belt pretensioner do not operate.

Switching to OFF position

1. Insert the key into the front passenger air bag deactivation switch and turn the key clockwise until the key points to OFF.
2. Remove the key.
3. Make sure the air bag deactivation indicator light remains illuminated when the ignition is switched ON.

The front passenger front and side air bags and also the seat belt pretensioner system will remain deactivated until the front passenger air bag deactivation switch is turned to the ON position.

ON

Front passenger front air bag, side air bag, and front passenger seat belt pretensioner operate. Activate the system only when a child-restraint system is not installed on the front passenger seat.

Switching to ON position

1. Insert the key into the front passenger air bag deactivation switch and turn the key anticlockwise until the key points to ON.
2. Remove the key.
3. Make sure the air bag deactivation indicator light remains illuminated when the ignition is switched ON. The air bag deactivation indicator light turns off after a short period of time.

Supplementary Restraint System Components

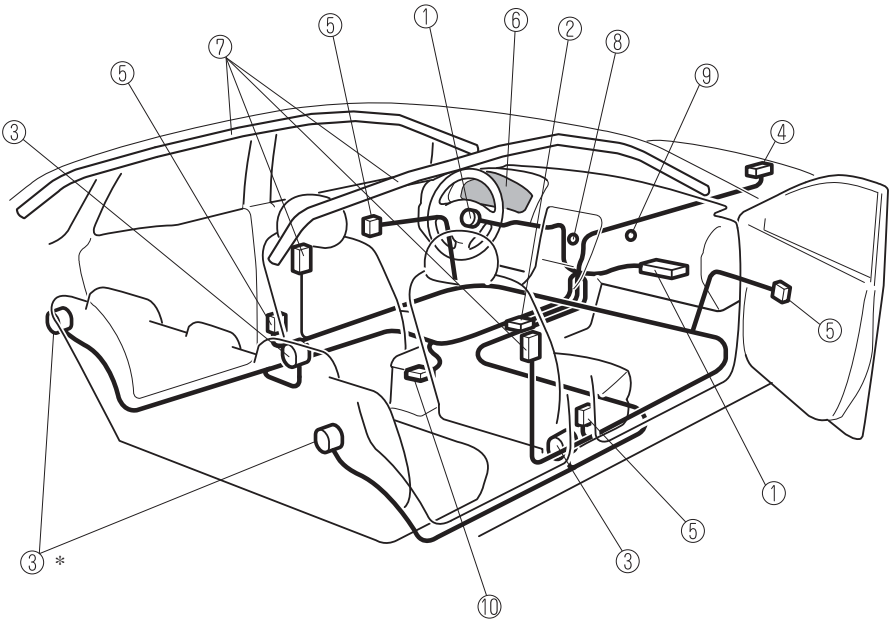

* Some models

① Driver/Front passenger inflators and air bags

② Crash sensors, and diagnostic module (SAS unit)

③ Seat belt pretensioners (page 2-18)

④ Front air bag sensor

⑤ Side crash sensors*

⑥ Air bag/seat belt pretensioner system warning light (page 4-38)

⑦ Side and curtain inflators and air bags*

⑧ Front passenger air bag deactivation indicator light* (page 2-47)

⑨ Front passenger air bag deactivation switch* (page 2-47)

⑩ Driver seat slide position sensor* (page 2-52)

How the SRS Air Bags Work

Your Mazda is equipped with the following types of SRS air bags. SRS air bags are designed to work together with the seat belts to help to reduce injuries during an accident. The SRS air bags are designed to provide further protection for passengers in addition to the seat belt functions. Be sure to wear seat belts properly.

▼Seat Belt Pretensioners

The pretensioners operate differently depending on what types of air bags are equipped. For details on the seat belt pretensioner operation, refer to the SRS Air Bag Deployment Criteria (page 2-56).

Front

The front seat belt pretensioners are designed to deploy in moderate or severe frontal, near frontal collisions. In addition, during a side collision, the pretensioner operates on the side in which the collision occurs.

Rear Outboard*

The rear outboard seat belt pretensioners are designed to deploy in moderate or severe frontal, near frontal collisions.

▼Driver Air Bag

The driver's air bag is mounted in the steering wheel.
When air bag crash sensors detect a frontal impact of greater than moderate force, the driver's air bag inflates quickly helping to reduce injury mainly to the driver's head or chest caused by directly hitting the steering wheel.
For more details about air bag deployment, refer to "SRS Air Bag Deployment Criteria" (page 2-56).

*Some models.

(With Front Passenger Air Bag Deactivation Switch)
The inflation of the driver's dual-stage air bag is controlled in two energy stages depending on the driver's seat position. The driver's seat slide position sensor is located under the driver's seat. The sensor determines whether the driver's seat is forward of or behind a reference position and sends the seat position to the diagnostic module (SAS unit). The SAS unit is designed to control the deployment of the driver's air bag depending on how close the driver's seat is to the steering wheel.
During an impact of moderate severity, the driver's air bag deploys with lesser energy, whereas during more severe impacts and when the driver's seat is behind the reference position, it deploys with more energy.

▼Front Passenger Air Bag

The front passenger air bag is mounted in the front passenger instrument panel.
The inflation mechanism for the front passenger air bag is the same as the driver's air bag, as mentioned above.
For more details about air bag deployment, refer to "SRS Air Bag Deployment Criteria" (page 2-56).

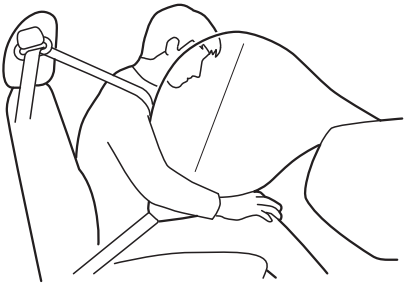

▼Side Air Bags*

The side air bags are mounted in the outboard sides of the front seatbacks.
When the air bag crash sensors detect a side impact of greater than moderate force, the system inflates the side air bag only on the side in which the vehicle was hit. The side air bag inflates quickly to reduce injury to the driver or front passenger's chest caused by directly hitting interior parts such as a door or window.
For more details about air bag deployment, refer to "SRS Air Bag Deployment Criteria" (page 2-56).

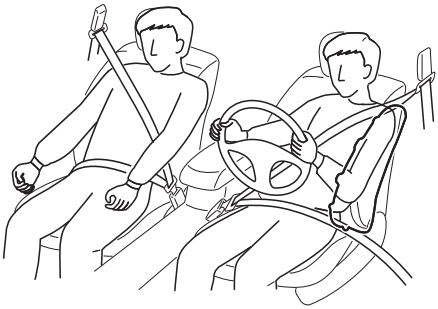

▼Curtain Air Bags*

The curtain air bags are mounted in the front and rear window pillars, and the roof edge along both sides.
When the air bag crash sensors detect a side impact of greater than moderate force, the curtain air bag inflates quickly and helps to reduce injury mainly to the rear outboard passenger's head caused by directly hitting interior parts such as a door or window.
For more details about air bag deployment, refer to "SRS Air Bag Deployment Criteria" (page 2-56).

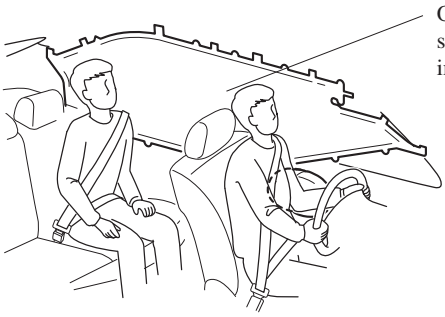

 *Some models.

▼Warning Light/Beep

A system malfunction or operation conditions are indicated by a warning.
Refer to Warning/Indicator Lights on page 4-38.
Refer to Warning Sound is Activated on page 7-48.

SRS Air Bag Deployment Criteria

This chart indicates the applicable SRS equipment that will deploy depending on the type of collision.
(The illustrations are the representative cases of collisions.)

SRS equipment	Types of collision		
	A severe frontal/near frontal collision	A severe side collision*2	A rear collision
	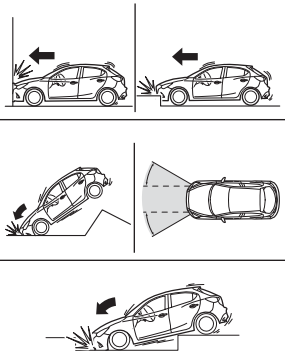	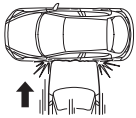	
Front seat belt pretensioner	X*1 (both sides)	X*1 (impact side only)	No air bag and seat belt pretensioner will be activated in a rear collision.
Rear seat belt pretensioner*	X (both sides)		
Driver air bag	X		
Front passenger air bag	X*1		
Side air bag*		X*1 (impact side only)	
Curtain air bag*		X (impact side only)	

X : The SRS air bag equipment is designed to deploy in a collision.

*1 **(With Front Passenger Air Bag Deactivation Switch)**
The front passenger front and side air bags and the front seat belt pretensioner are designed to deploy depending on the status of the front passenger air bag deactivation switch.

*2 **(With Side/Curtain Air Bags)**
In a side collision, the front seat belt pretensioners and the side/curtain air bags deploy (only on the side in which the collision occurs).

 *Some models.

NOTE
In a frontal offset collision, the equipped air bags and pretensioners may all deploy depending on the direction, angle, and rate of impact.

Limitations to SRS Air Bag

In severe collisions such as those described previously in "SRS Air Bag Deployment Criteria", the applicable SRS air bag equipment will deploy. However, in some accidents, the equipment may not deploy depending on the type of collision and its severity.

Limitations to front/near front collision detection:
The following illustrations are examples of front/near front collisions that may not be detected as severe enough to deploy the SRS air bag equipment.

Impacts involving trees or poles

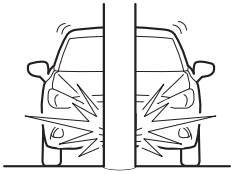

Frontal offset impact to the vehicle

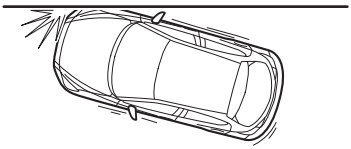

Rear-ending or running under a truck's tail gate

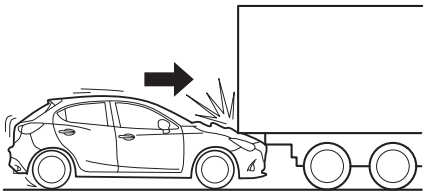

Limitations to side collision detection:
The following illustrations are examples of side collisions that may not be detected as severe enough to deploy the SRS air bag equipment.

Side impacts involving trees or poles

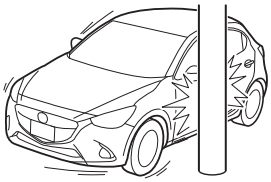

Side impacts with two-wheeled vehicles

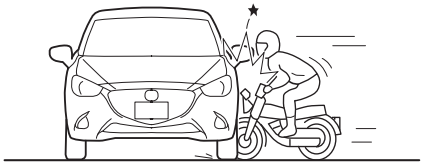

Roll-over

MEMO

3 Before Driving

Use of various features, including keys, doors, mirrors and windows.

Keys 3-2
Keys 3-2
Keyless Entry System 3-3

Advanced Keyless Entry System 3-8
Advanced Keyless Entry System* 3-8
Operational Range 3-9

Doors and Locks 3-10
Door Locks 3-10
Liftgate/Boot Lid 3-20

Fuel and Emission 3-26
Fuel and Engine Exhaust Precautions 3-26
Fuel-Filler Flap and Cap 3-31

Steering Wheel 3-33
Steering Wheel 3-33

Mirrors 3-34
Mirrors 3-34

Windows 3-37
Power Windows 3-37
Manual Windows* 3-40

Security System 3-41
Modification and Add-On Equipment 3-41
Immobilizer System 3-41
Theft-Deterrent System* 3-43

Driving Tips 3-47
Running-In 3-47
Saving Fuel and Protection of the Environment 3-47
Hazardous Driving 3-48
Floor Mat 3-49
Rocking the Vehicle 3-50
Winter Driving 3-50
Driving In Flooded Area 3-53
Turbocharger Information (SKYACTIV-D 1.5) 3-54

Towing 3-55
Towing Caravans and Trailers (Europe/Russia/Turkey/Israel/South Africa) 3-55

*Some models.

Keys

⚠ WARNING

Do not leave the key in your vehicle with children and keep them in a place where your children will not find or play with them:
Leaving children in a vehicle with the key is dangerous. This could result in someone being badly injured or even killed. Children may find these keys to be an interesting toy to play with and could cause the power windows or other controls to operate, or even make the vehicle move.

⚠ CAUTION

- Because the key (transmitter) uses low-intensity radio waves, it may not function correctly under the following conditions:
  - The key is carried with communication devices such as cellular phones.
  - The key contacts or is covered by a metal object.
  - The key is near electronic devices such as personal computers.
  - Non-Mazda genuine electronic equipment is installed in the vehicle.
  - There is equipment which discharges radio waves near the vehicle.

⚠ CAUTION

- The key (transmitter) may consume battery power excessively if it receives high-intensity radio waves. Do not place the key near electronic devices such as televisions or personal computers.
- To avoid damage to the key (transmitter), DO NOT:
  - Drop the key.
  - Get the key wet.
  - Disassemble the key.
  - Expose the key to high temperatures on places such as the instrument panel or bonnet, under direct sunlight.
  - Expose the key to any kind of magnetic field.
  - Place heavy objects on the key.
  - Put the key in an ultrasonic cleaner.
  - Put any magnetized objects close to the key.

A code number is stamped on the plate attached to the key set; detach this plate and store it in a safe place (not in the vehicle) for use if you need to make a replacement key (auxiliary key).
Also write down the code number and keep it in a separate safe and convenient place, but not in the vehicle.

If your key (auxiliary key) is lost, consult your Authorised Mazda Repairer and have your code number ready.

NOTE

The driver must carry the key to ensure the system functions properly.

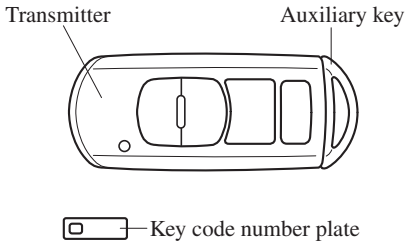

To use the auxiliary key, press the knob and pull out the auxiliary key from the transmitter.

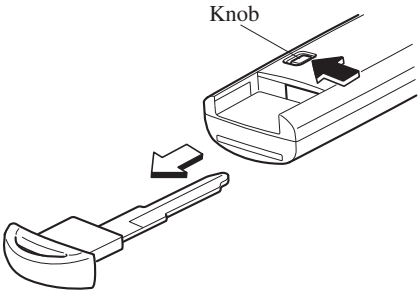

Keyless Entry System

This system uses the key buttons to remotely lock and unlock the doors and the liftgate/boot lid, and opens the boot lid. The system can start the engine without having to take the key out of your purse or pocket.
Operating the theft-deterrent system is also possible on theft-deterrent system-equipped vehicles.

System malfunctions or warnings are indicated by the following warning lights or beeps.

- KEY Warning Light (Red)
  Refer to Warning/Indicator Lights on page 4-38.
- Ignition Not Switched Off (STOP) Warning Beep
  Refer to Ignition Not Switched Off (STOP) Warning Beep on page 7-49.
- Key Removed from Vehicle Warning Beep
  Refer to Key Removed from Vehicle Warning Beep on page 7-49.

If you have a problem with the key, consult an expert repairer, we recommend an Authorised Mazda Repairer.

If your key is lost or stolen, consult an Authorised Mazda Repairer as soon as possible for a replacement and to make the lost or stolen key inoperative.

⚠ CAUTION

Changes or modifications not expressly approved by the party responsible for compliance could void the user's authority to operate the equipment.

NOTE

- The keyless entry system operation may vary due to local conditions.
- The keyless entry system is fully operational (door/liftgate/boot lid lock/unlock) when the ignition is switched off. The system does not operate if the ignition is switched to any position other than off.
- If the key does not operate when pressing a button or the operational range becomes too small, the battery may be weak. To install a new battery, refer to Key Battery Replacement (page 6-41).
- Battery life is about one year. Replace the battery with a new one if the KEY indicator light (green) flashes in the instrument cluster. Replacing the battery about once a year is recommended because the KEY warning light/indicator light may not illuminate or flash depending on the rate of battery depletion.

- Additional keys can be obtained at an Authorised Mazda Repairer. Up to 6 keys can be used with the keyless functions per vehicle. Bring all keys to an Authorised Mazda Repairer when additional keys are required.

▼Transmitter

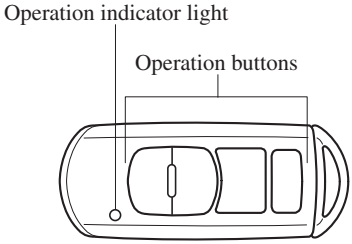

NOTE

- **(European models)**
  The headlights turn on/off by operating the transmitter. Refer to Leaving Home Light on page 4-66.
- **(With theft-deterrent system)**
  The hazard warning lights flash when the theft-deterrent system is armed or turned off.
  Refer to Theft-Deterrent System on page 3-43.
- **(With the advanced keyless function (European models))**
  The setting can be changed so that a beep sound is heard for confirmation when the doors and the liftgate/boot lid are locked/unlocked using the key.
  (With the advanced keyless function (Except European models))
  A beep sound can be heard for confirmation when the doors and the liftgate/boot lid are locked/unlocked using the key. If you prefer, the beep sound can be turned off.
  The volume of the beep sound can also be changed.
  Refer to Personalisation Features on page 9-13.

NOTE

Use the following procedure to change the setting.

1. Switch the ignition off and close all of the doors and the liftgate/boot lid.
2. Open the driver's door.
3. Within 30 seconds of opening the driver's door, press and hold the LOCK button on the key for 5 seconds or longer.
   All of the doors and the liftgate/boot lid lock and the beep sound activates at the currently set volume. The setting changes each time the LOCK button on the key is pressed and the beep sound activates at the set volume. (If the beep sound has been set to not activate, it will not activate.)
4. The setting change is completed by doing any one of the following:
   - Switching the ignition to ACC or ON.
   - Closing the driver's door.
   - Opening the liftgate/boot lid.
   - Not operating the key for 10 seconds.
   - Pressing any button except the LOCK button on the key.
   - Pressing a request switch.

The operation indicator light flashes when the buttons are pressed.

Lock button

To lock the doors and the liftgate/boot lid, press the lock button and the hazard warning lights will flash once.
(With the advanced keyless function (Except European models))
A beep sound will be heard once.

NOTE

- **(European models)**
  The doors and the liftgate/boot lid cannot be locked by pressing the lock button while any other door is open. The hazard warning lights will also not flash.
  (Except European models)
  The doors and the liftgate/boot lid cannot be locked by pressing the lock button while any other door or the liftgate is open. The hazard warning lights will also not flash.
- **(With the i-stop function (European models))**
  Removing the key from the vehicle, closing all the doors and pressing the LOCK button on the key while the i-stop function is operating (engine is stopped) will switch the ignition OFF and lock all the doors (Steering wheel also locks).
  Refer to i-stop on page 4-13.
- Make sure all doors and the liftgate/boot lid are locked after pressing the button.

NOTE

- **(With double locking system)**
  Pressing the lock button twice within 3 seconds will activate the double locking system.
  Refer to Double Locking System on page 3-11.
- **(With theft-deterrent system)**
  When the doors are locked by pressing the lock button on the key while the theft-deterrent system is armed, the hazard warning lights will flash once to indicate that the system is armed.

Unlock button

To unlock the doors and the liftgate/boot lid, press the unlock button and the hazard warning lights will flash twice.
(With the advanced keyless function (Except European models))
A beep sound will be heard twice.

NOTE

- **(Auto re-lock function)**
  After unlocking with the key, all doors and the liftgate/boot lid will automatically lock if any of the following operations are not performed within about 30 seconds.
  If your vehicle has a theft-deterrent system, the hazard warning lights will flash for confirmation.
  The time required for the doors to lock automatically can be changed.
  Refer to Personalisation Features on page 9-13.
  - A door or the liftgate/boot lid is opened.
  - The ignition is switched to any position other than off.
- **(With theft-deterrent system)**
  When the doors are unlocked by pressing the unlock button on the key while the theft-deterrent system is turned off, the hazard warning lights will flash twice to indicate that the system is turned off.

Boot button (Saloon)

To open the boot lid, press and hold the boot button until the boot lid opens.

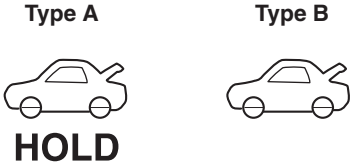

Intrusion sensor cancel button (with theft-deterrent system)*

To cancel the intrusion sensor (part of the theft-deterrent system), press the intrusion sensor cancel button within 20 seconds after pressing the lock button and the hazard warning lights will flash three times.
Refer to Theft-Deterrent System on page 3-43.

▼Operational Range

The system operates only when the driver is in the vehicle or within operational range while the key is being carried.

Starting the Engine

NOTE

- Starting the engine may be possible even if the key is outside of the vehicle and extremely close to a door and window, however, always start the engine from the driver's seat.
  If the vehicle is started and the key is not in the vehicle, the vehicle will not restart after it is shut off and the ignition is switched to off.
- The luggage compartment/boot is out of the assured operational range, however, if the key (transmitter) is operable the engine will start.

With the advanced keyless function

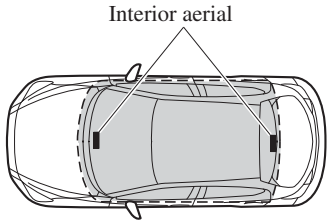

Operational range

Without the advanced keyless function

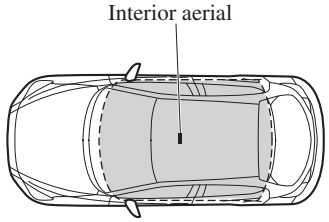

Operational range

NOTE

The engine may not start if the key is placed in the following areas:

- Around the instrument panel
- In the storage compartments or the centre console
- On the rear parcel shelf (saloon)

▼Key Suspend Function

If a key is left in the vehicle, the functions of the key left in the vehicle are temporarily suspended to prevent theft of the vehicle.
To restore the functions, press the unlock button on the functions-suspended key in the vehicle.

*Some models.

Advanced Keyless Entry System*

⚠ WARNING

Radio waves from the key may affect medical devices such as pacemakers: ***Before using the key near people who use medical devices, ask the medical device manufacturer or your physician if radio waves from the key will affect the device.***

The advanced keyless function allows you to lock/unlock the door and the liftgate/boot lid, or open the liftgate/boot lid while carrying the key.

System malfunctions or warnings are indicated by the following warning lights or beeps.

- KEY Warning Light (Red)
  Refer to Warning/Indicator Lights on page 4-38.
- Ignition Not Switched Off Warning Beep
  Refer to Ignition Not Switched Off (STOP) Warning Beep on page 7-49.
- Key Removed from Vehicle Warning Beep
  Refer to Key Removed from Vehicle Warning Beep on page 7-49.
- Request switch Inoperable Warning Beep
  Refer to Request Switch Inoperable Warning Beep (With the advanced keyless function) on page 7-50.
- Key Left-in-luggage Compartment/Boot Warning Beep
  Refer to Key Left-in-luggage Compartment Warning Beep (With the advanced keyless function) on page 7-50.
- Key Left-in-vehicle Warning Beep
  Refer to Key Left-in-vehicle Warning Beep (With the advanced keyless function) on page 7-50.

NOTE

The advanced keyless entry system functions can be deactivated to prevent any possible adverse effect on a user wearing a pacemaker or other medical device. If the system is deactivated, you will be unable to start the engine by carrying the key. Consult an expert repairer, we recommend an Authorised Mazda Repairer for details. If the advanced keyless entry system has been deactivated, you can start the engine by following the procedure indicated when the key battery goes dead.
Refer to Engine Start Function When Key Battery is Dead on page 4-9.

*Some models.

Operational Range

The system operates only when the driver is in the vehicle or within operational range while the key is being carried.

NOTE
When the battery power is low, or in places where there are high-intensity radio waves or noise, the operational range may become narrower or the system may not operate. For determining battery replacement, Refer to Keyless Entry System on page 3-3.

▼Locking, Unlocking the Doors and the Liftgate/Boot Lid

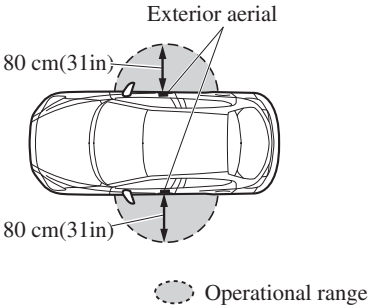

NOTE
The system may not operate if you are too close to the windows or door handles, or liftgate/boot lid.

▼Opening the Liftgate/Boot Lid

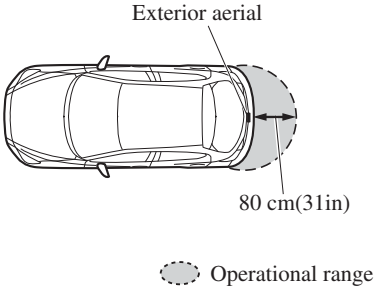

Door Locks

⚠ WARNING

Always take all children and pets with you or leave a responsible person with them:
Leaving a child or a pet unattended in a parked vehicle is dangerous. In hot weather, temperatures inside a vehicle can become high enough to cause brain damage or even death.

Do not leave the key in your vehicle with children and keep them in a place where your children will not find or play with them:
Leaving children in a vehicle with the key is dangerous. This could result in someone being badly injured or even killed.

Always close all the windows, lock the doors and the liftgate/boot lid and take the key with you when leaving your vehicle unattended:
Leaving your vehicle unlocked is dangerous as children could lock themselves in a hot vehicle, which could result in death. Also, a vehicle left unlocked becomes an easy target for thieves and intruders.

After closing the doors and the liftgate/boot lid, always verify that they are securely closed:
Doors and the liftgate/boot lid not securely closed are dangerous, if the vehicle is driven with a door and the liftgate/boot lid not securely closed, the door and the liftgate/boot lid could open unexpectedly resulting in an accident.

⚠ WARNING

Always confirm the safety around the vehicle before opening a door and the liftgate/boot lid:
Suddenly opening a door and the liftgate/boot lid is dangerous. A passing vehicle or a pedestrian could be hit and cause an accident.

⚠ CAUTION

Always confirm the conditions around the vehicle before opening/closing the doors and the liftgate/boot lid and use caution during strong winds or when parked on an incline. Not being aware of the conditions around the vehicle is dangerous because fingers could get caught in the door and the liftgate/boot lid or a passing pedestrian could be hit, resulting in an unexpected accident or injury.

NOTE

- The vehicle lock-out prevention feature prevents you from locking yourself out of the vehicle.
  (European models)
  All doors and the liftgate/boot lid will automatically unlock if they are locked using the power door locks with any door open.
  If all the doors are closed even though the liftgate/boot lid is open, all the doors will lock.
  (Except European models)
  All doors and the liftgate/boot lid will automatically unlock if they are locked using the power door locks with any door or the liftgate open.

- **(Door unlock (control) system with collision detection)***
  This system automatically unlocks the doors and the liftgate/boot lid in the event the vehicle is involved in an accident to allow passengers to get out of the vehicle immediately and prevent being trapped inside.
  While the ignition is switched ON and in the event the vehicle receives an impact strong enough to inflate the air bags, all the doors and the liftgate/boot lid are automatically unlocked after about 6 seconds have elapsed from the time of the accident.
  The doors and the liftgate/boot lid may not unlock depending on how an impact is applied, the force of the impact, and other conditions of the accident.
  If door-related systems or the battery is malfunctioning, the doors and the liftgate/boot lid will not unlock.

▼Locking, Unlocking with Key

All doors and the liftgate/boot lid lock automatically when the driver's door is locked using the key. They all unlock when the driver's door is unlocked using the key.
Turn the key toward the front to lock, toward the back to unlock.

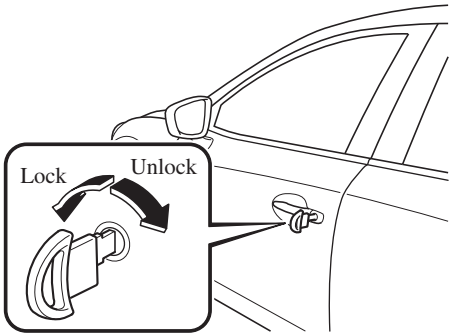

▼Double Locking System*

The double locking system is designed to prevent someone who has broken into your vehicle from opening the door from the inside.

If you have any problems with the double locking system, consult an expert repairer, we recommend an Authorised Mazda Repairer.

*Some models.

⚠ WARNING

Never activate the double locking system with passengers, especially children, still inside the vehicle:
Activating the system with passengers, especially children, still inside the vehicle is dangerous. The passengers cannot open the doors from inside. They would be trapped and subjected to extreme temperatures. This could result in serious injuries or even death.

How to Activate the system

1. Close all the windows.
2. Switch the ignition off and take the key with you.
3. Close all doors and liftgate/boot lid.
4. Insert the key in the driver's door, turn the key to the lock position, and return it to the centre position. Then turn it to the lock position again within 3 seconds.

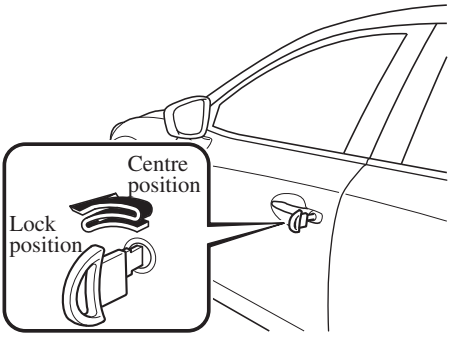

NOTE

- You can also activate the system by pressing the lock button on the transmitter twice within 3 seconds.
- **(With the advanced keyless function)**
  You can also activate the system by pressing the request switch twice within 3 seconds.

5. The indicator light illuminates for about 3 seconds to indicate that the system has been activated.

NOTE

The system cannot be activated when any door or the liftgate is open.

How to Deactivate the System

Unlock the driver's door or switch the ignition ON.

NOTE

If the power supply is interrupted (fuse blows or the battery is disconnected), the system can only be deactivated by unlocking a door with the key.

▼Locking, Unlocking with Request Switch (With the advanced keyless function)

All doors and the liftgate/boot lid can be locked/unlocked by pressing the request switch while the key is being carried.

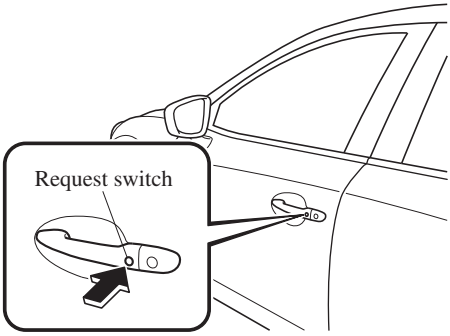

To lock

To lock the doors and the liftgate/boot lid, press the request switch and the hazard warning lights will flash once.
(Except European models)
A beep sound will be heard once.

To unlock

To unlock the doors and the liftgate/boot lid, press the request switch and the hazard warning lights will flash twice.
(Except European models)
A beep sound will be heard twice.

NOTE

- Confirm that all doors and the liftgate/boot lid are securely locked. For the liftgate/boot lid, move it without pressing the electric liftgate/boot lid opener to verify that the liftgate/boot lid has not been left ajar.
- **(European models)**
  All doors and the liftgate/boot lid cannot be locked when any door is open.
  (Except European models)
  All doors and the liftgate/boot lid cannot be locked when any door or the liftgate is open.
- It may require a few seconds for the doors to unlock after the request switch is pressed.
- **(European models)**
  The setting can be changed so that a beep sound is heard for confirmation when the doors and the liftgate/boot lid are locked/unlocked using a request switch.
  (Except European models)
  A beep sound is heard for confirmation when the doors and the liftgate/boot lid are locked/unlocked using the request switch. If you prefer, the beep sound can be turned off.
  The volume of the beep sound can also be changed. Refer to Personalisation Features on page 9-13.

NOTE

Use the following procedure to change the setting.

1. Switch the ignition off and close all of the doors and the liftgate/boot lid.
2. Open the driver's door.
3. Within 30 seconds of opening the driver's door, press and hold the LOCK button on the key for 5 seconds or longer.
   All of the doors and the liftgate/boot lid lock and the beep sound activates at the currently set volume. The setting changes each time the LOCK button on the key is pressed and the beep sound activates at the set volume. (If the beep sound has been set to not activate, it will not activate.)
4. The setting change is completed by doing any one of the following:
   - Switching the ignition to ACC or ON.
   - Closing the driver's door.
   - Opening the liftgate/boot lid.
   - Not operating the key for 10 seconds.
   - Pressing any button except the LOCK button on the key.
   - Pressing a request switch.

NOTE

- **(With theft-deterrent system)**
  The hazard warning lights flash when the theft-deterrent system is armed or turned off.
  Refer to Theft-Deterrent System on page 3-43.
- **(With double locking system)**
  Pressing the request switch twice within 3 seconds will activate the double locking system.
  Refer to Double Locking System on page 3-11.

NOTE

- The setting can be changed so that the doors and the liftgate/boot lid are locked automatically without pressing the request switch.
  Refer to Personalisation Features on page 9-13.
  (Auto-lock function)
  A beep sound is heard when all doors and the liftgate are closed while the advanced key is being carried. All doors and the liftgate/boot lid are locked automatically after about three seconds when the advanced key is out of the operational range. Also, the hazard warning lights flash once. (Even if the driver is in the operational range, all doors and the liftgate/boot lid are locked automatically after about 30 seconds.) If you are out of the operational range before the doors and the liftgate/boot lid are completely closed or another key is left in the vehicle, the auto-lock function will not work. Always make sure that all doors and the liftgate/boot lid are closed and locked before leaving the vehicle. The auto-lock function does not close the power windows.

NOTE

- **Auto re-lock function**
  After unlocking with the request switch, all doors and the liftgate/boot lid will automatically lock if any of the following operations are not performed within about 30 seconds.
  If your vehicle has a theft-deterrent system, the hazard warning lights will flash for confirmation.
  The time required for the doors to lock automatically can be changed.
  Refer to Personalisation Features on page 9-13.
  - Opening a door or the liftgate/boot lid.
  - Switching the ignition to any position other than off.

▼Locking, Unlocking with Transmitter

All doors and the liftgate/boot lid can be locked/unlocked by operating the keyless entry system transmitter, refer to Keyless Entry System (page 3-3).

▼Locking, Unlocking with Door-Lock Switch*

All doors and the liftgate/boot lid lock automatically when the lock side is pressed with all doors and the liftgate closed.
They all unlock when the unlock side is pressed.

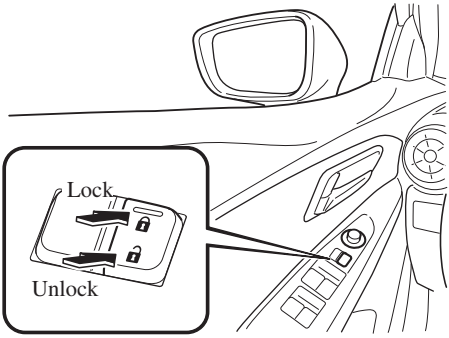

NOTE

The doors and the liftgate/boot lid cannot be locked while any other door or the liftgate is open.

▼Auto Lock/Unlock Function*

⚠ *WARNING*

(With door-lock switch)
Do not pull the inner handle on the driver's door:
Pulling the inner handle on the door while the vehicle is moving is dangerous. The driver can fall out of the vehicle if the door opens accidentally , which could result in death or serious injury.

(Without door-lock switch)
Do not pull the inner handle on a front door:
Pulling the inner handle on a front door while the vehicle is moving is dangerous. Passengers can fall out of the vehicle if the door opens accidentally , which could result in death or serious injury.

- When the vehicle speed exceeds 20 km/h (12 mph), all doors and the liftgate/boot lid lock automatically.
- When the ignition is switched off, all doors and the liftgate/boot lid unlock automatically.

These functions can also be disabled so that they do not operate.

Auto lock/unlock function setting change using door-lock switch (With door-lock switch)

The doors and the liftgate/boot lid can be set to lock or unlock automatically by selecting any one of the functions from the following table and using the door-lock switch on the interior door panel.

*Some models.

NOTE

- Function number 3 in the following table is the factory setting for your vehicle.
- There are only a total of six auto lock/unlock settings available for automatic transaxle vehicles, and three for manual transaxle vehicles. Be sure to press the unlock side of the driver's door-lock switch the correct number of times according to the selected function number. If the switch is mistakenly pressed seven times on an automatic transaxle vehicle or four times on a manual transaxle, the procedure will be cancelled. If this occurs, start the procedure from the beginning.

Function number	Function*1
1	The auto door-lock function is disabled.
2	All the doors and the liftgate/boot lid lock automatically when the vehicle speed is about 20 km/h (12 mph) or more.
3 (Factory Setting)	All the doors and the liftgate/boot lid lock automatically when the vehicle speed is about 20 km/h (12 mph) or more. All the doors and the liftgate/boot lid unlock when the ignition is switched from ON to Off.
4	**(Automatic transaxle vehicles only)** When the ignition is switched ON and the selector lever is shifted from park (P) to any other gear position, all the doors and the liftgate/boot lid lock automatically.
5	**(Automatic transaxle vehicles only)** When the ignition is switched ON and the selector lever is shifted from park (P) to any other gear position, all the doors and the liftgate/boot lid lock automatically. When the selector lever is shifted to park (P) while the ignition is switched ON, all the doors and the liftgate/boot lid unlock automatically.
6	**(Automatic transaxle vehicles only)** All the doors and the liftgate/boot lid lock automatically when the vehicle speed is about 20 km/h (12 mph) or more. When the selector lever is shifted to park (P) while the ignition is switched ON, all the doors and the liftgate/boot lid unlock automatically.

*1 Other settings for the auto door lock function are available at an expert repairer, we recommend an Authorised Mazda Repairer. For details consult an expert repairer, we recommend an Authorised Mazda Repairer. Refer to Personalisation Features on page 9-13.

Settings can be changed using the following procedure.

1. Safely park the vehicle. All doors must remain closed.
2. Switch the ignition ON.
3. Press and hold the lock side of the driver's door-lock switch within 20 seconds of switching the ignition ON, and make sure a beep sound is heard about eight seconds afterwards.
4. Refer to the auto lock/unlock function setting table, determine the function number for the desired setting. Press the unlock side of the driver's door-lock switch the same number of times as the selected function number (Ex. If you select function 2, press the unlock side of the switch only 2 times).

5. Three seconds after the function setting has been changed, a beep sound will beep in the amount of the selected function number. (Ex. Function number 3 = 3 beep sounds)

(Manual transaxle vehicles)

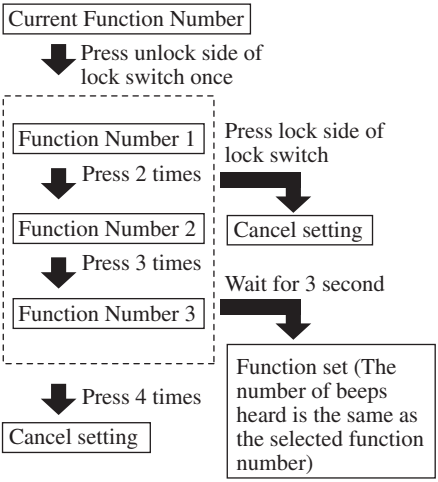

(Automatic transaxle vehicles)

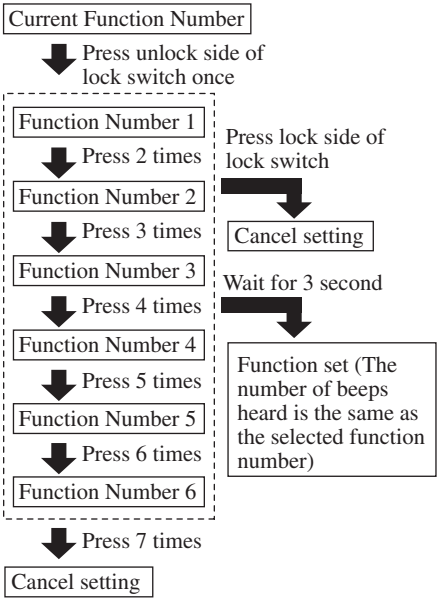

NOTE

- The doors cannot be locked or unlocked while the setting function is being performed.
- The procedure can be cancelled by pressing the lock side of the door-lock switch.

▼Locking, Unlocking with Door-Lock Knob

Operation from inside

(With door-lock switch)
To lock any door from the inside, press the door-lock knob.
To unlock, pull it outward.
This does not operate the other door locks.
(Without door-lock switch)
All doors and the liftgate/boot lid lock automatically when the driver's door-lock knob is pressed. They all unlock when the driver's door-lock knob is pulled out.

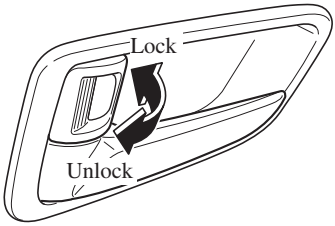

NOTE

The red indication can be seen when the door-lock knob is unlocked.

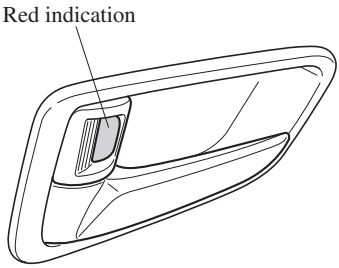

Operation from outside

To lock the rear and front passenger doors with the door-lock knob from the outside, press the door-lock knob to the lock position and close the door (holding the door handle in the open position is not required).
This does not operate the other door locks.

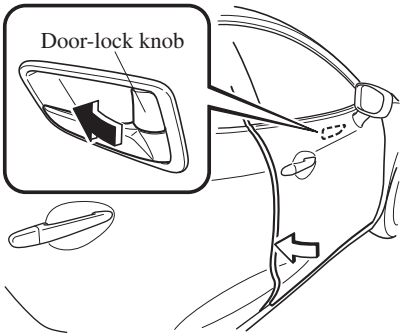

NOTE

When locking the door this way:

- Be careful not to leave the key inside the vehicle.
- The driver's door lock knob cannot be used while the driver's door is open.

▼Rear Door Child Safety Locks

These locks are intended to help prevent children from accidentally opening the rear doors. Use them on both rear doors whenever a child rides in the rear seat of the vehicle.

If you slide the child safety lock to the lock position before closing that door, the door cannot be opened from the inside. The door can only be opened by pulling the outside handle.

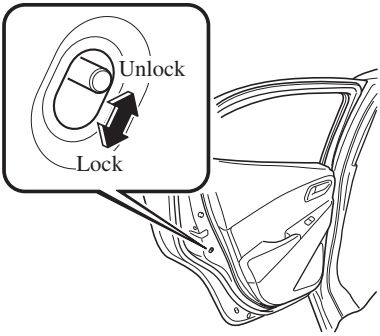

Liftgate/Boot Lid

⚠ *WARNING*

Never allow a person to ride in the luggage compartment/boot:
Allowing a person to ride in the luggage compartment/boot is dangerous. The person in the luggage compartment/boot could be seriously injured or killed during sudden braking or a collision.

Do not drive with the liftgate/boot lid open:
Exhaust gas in the cabin of a vehicle is dangerous. An open liftgate/boot lid in a moving vehicle will cause exhaust gas to be drawn into the cabin. This gas contains CO (carbon monoxide), which is colourless, odourless, and highly poisonous, and it can cause loss of consciousness and death. Moreover, an open liftgate/boot lid could cause occupants to fall out in an accident.

Do not stack or leave loaded luggage unsecured in the luggage compartment:
Otherwise, the luggage may move or collapse, resulting in injury or an accident. In addition, do not load luggage higher than the seatbacks. It may affect the side or rear field of view.

⚠ CAUTION

- Before opening the liftgate/boot lid, remove any snow and ice accumulation on it. Otherwise, the liftgate/boot lid could close under the weight of the snow and ice resulting in injury.
- Be careful when opening/closing the liftgate/boot lid during strong winds. If a strong gust blows against the liftgate/boot lid, it could close suddenly resulting in injury.
- Fully open the liftgate/boot lid and make sure that it stays open. If the liftgate/boot lid is only opened partially, it could slam shut by vibration or wind gusts resulting in injury.
- When loading or unloading luggage in the luggage compartment/boot, turn off the engine. Otherwise, you could get burned by the heat of the exhaust gas.
- Be careful not to apply excessive force to the damper stay on the liftgate such as by putting your hand on the stay. Otherwise, the damper stay may bend and affect the liftgate operation.

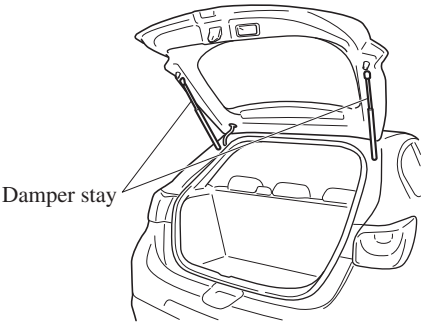

▼Opening and Closing the Liftgate/ Boot Lid

Opening the liftgate (Hatchback)

Using the electric liftgate opener

Unlock the doors and liftgate, then press the electric liftgate opener on the liftgate and raise it when the latch releases.

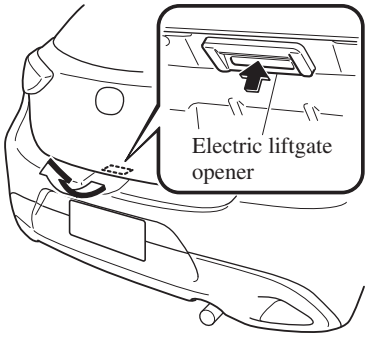

NOTE

(With the advanced keyless function)

- A locked liftgate can also be opened while the key is being carried.
- When opening the liftgate with the doors and the liftgate locked, it may require a few seconds for the liftgate latch to release after the electric liftgate opener is pressed.

NOTE

- The liftgate can be closed when the doors are locked with the key left in the vehicle. However, to prevent locking the key in the vehicle, the liftgate can be opened by pressing the electric liftgate opener. If the liftgate cannot be opened despite doing this procedure, first push the liftgate completely closed, then press the electric liftgate opener to fully open the liftgate.
- When the liftgate latch is released by pressing the electric liftgate opener, the liftgate raises slightly. If the liftgate is not operated for a certain period of time, the liftgate cannot be raised.
  To open
  Press the electric liftgate opener again.
  To close
  To close the liftgate from its slightly raised position, open it first by pressing the electric liftgate opener, then close it after waiting at least 1 second.
- If the liftgate is not fully closed, the driver is notified by a warning indicated in the instrument cluster.
- If the vehicle battery is dead or there is a malfunction in the electrical system and the liftgate cannot be unlocked, the liftgate can be opened by performing the emergency procedure.
  Refer to When Liftgate/Boot Lid Cannot be Opened on page 7-53.

Opening the boot lid (Saloon)

Using the remote release button

Push the release button.

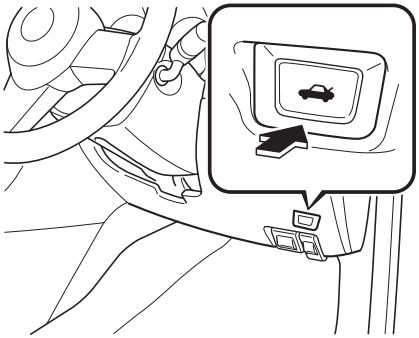

Using the electric boot lid opener (With the advanced keyless function)

A boot lid can also be opened while the key is being carried.
Press the electric boot lid opener on the boot lid, then raise the boot lid when the latch releases.

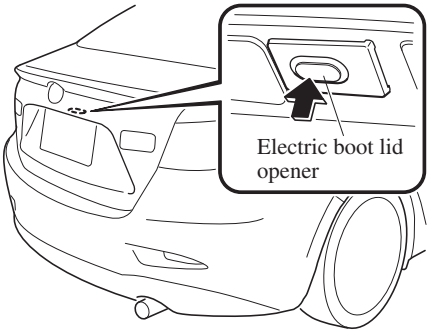

NOTE

- When opening the boot lid with the doors locked, it may require a few seconds for the boot lid latch to release after the electric boot lid opener is pressed.
- The boot lid can be closed when the doors are locked with the key left in the vehicle. However, to prevent locking the key in the vehicle, the boot lid can be opened by pressing the electric boot lid opener. If the boot lid cannot be opened despite doing this procedure, press the electric boot lid opener to fully open the boot lid after pushing the boot lid completely closed.
- If the vehicle battery is dead or there is a malfunction in the electrical system and the boot lid cannot be unlocked, the boot lid can be opened by performing the emergency procedure.
  Refer to When Liftgate/Boot Lid Cannot be Opened on page 7-53.

Closing the liftgate/boot lid

(Hatchback)
Lower the liftgate slowly using the liftgate grip recess, then push the liftgate closed using both hands.
Do not slam it. Pull up on the liftgate to make sure it is secure.

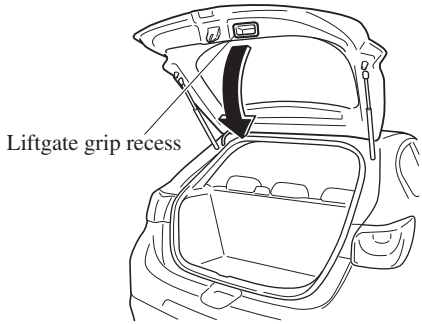

(Saloon)
Use both hands to push the boot lid down until the lock snaps shut. Do not slam it. Pull up on the boot lid to make sure it is secure.

▼Luggage Compartment

Luggage compartment cover (Hatchback)*

⚠ WARNING

Do not place anything on top of the cover:
Placing luggage or other cargo on top of the luggage compartment cover is dangerous. During sudden braking or a collision, the cargo could become a projectile that could hit and injure someone. The vehicle has a light weight luggage compartment cover to keep the contents of your luggage area out of sight; it will not retain heavy objects that are not tied down in an accident such as a rollover. Tie down all heavy objects, whether luggage or cargo, using the tie down hooks.

Make sure luggage and cargo are secured before driving:
Not securing cargo while driving is dangerous as it could move or be crushed during sudden braking or a collision and cause injury.

⚠ CAUTION

Make sure the luggage compartment cover is firmly secured. If it is not firmly secured, it could unexpectedly disengage resulting in injury.

The luggage compartment can be accessed by opening the liftgate when the straps are attached to the sides of the liftgate.

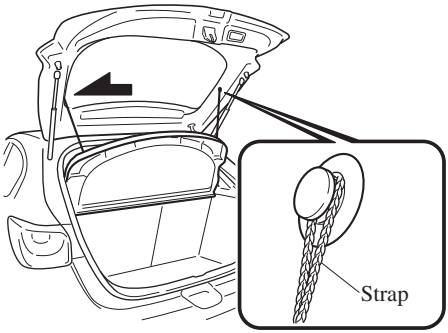

Removing the cover

This cover can be removed for more room.

1. Remove the straps from the hooks.
2. Lift the end of the luggage compartment cover a little, pull it outward, and remove it from the pins.

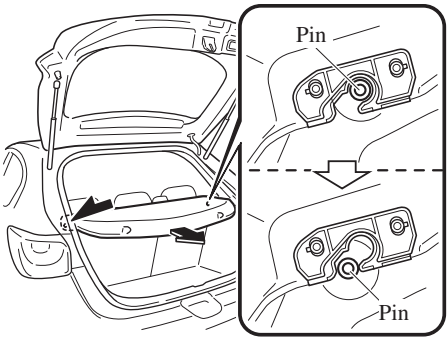

3. Lift the front end of the luggage compartment cover and remove it.

*Some models.

Loading golf bags (only Saloon)

Up to two golf bags can be carried in the boot.

1. Place the bottom of the first golf bag in the boot with its bottom pointed to the left and fit it into the front of the boot.

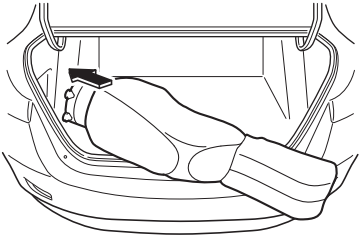

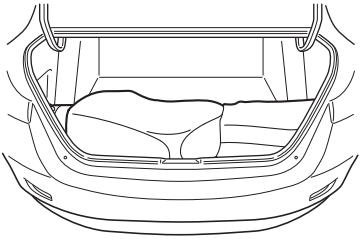

2. Place the second golf bag in the boot with its bottom pointed to the left and fit it into the back of the boot.

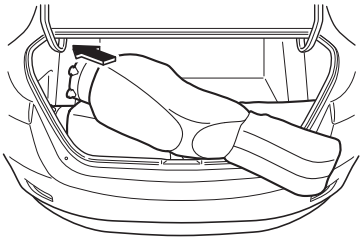

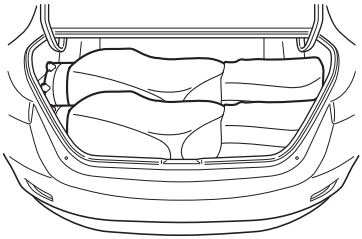

NOTE
Some golf bags cannot fit depending on their size.

Fuel and Engine Exhaust Precautions

▼Fuel Requirements (SKYACTIV-G 1.3, SKYACTIV-G 1.5)

Vehicles with catalytic converters or oxygen sensors must use ONLY UNLEADED FUEL, which will reduce exhaust emissions and keep spark plug fouling to a minimum.

The vehicle will perform best with fuel listed in the table.

Fuel	Research Octane Number	Country
Premium unleaded fuel (Conforming to EN 228 and within E10)*1	95 or above	New Caledonia, Turkey, Azerbaijan, Armenia, Georgia, Kazakhstan, Canary Islands, Reunion, Morocco, Austria, Greece, Italy, Switzerland, Belgium, Denmark, Finland, Norway, Portugal, Spain, Sweden, Hungary, Germany, Poland, Bulgaria, Croatia, Slovenia, Luxembourg, Slovakia, Latvia, Lithuania, Russia, Belarus, France, Ukraine, Czech, Estonia, Faeroe, Iceland, Romania, The Netherlands, Macedonia, Bosnia and Herzegovina, Serbia, Montenegro, Albania, Moldova, Martinique, F.Guiana, Guadeloupe, Singapore, Hong Kong, Macau, Malaysia, Brunei, Mauritius, South Africa, Bermuda, Jamaica, Barbados, Antigua, Guatemala, Bolivia, Uruguay, Honduras, Nicaragua, Aruba, St. Martin, Cyprus, Malta, Ireland, UK, Taiwan, Tahiti, Vanuatu, UAE, Lebanon, Israel, Algeria, Libya, Tunisia, Madagascar, Seychelles
Regular unleaded fuel	92 or above	Egypt, Myanmar
	90 or above	Indonesia, Nepal, Sri Lanka, Fiji, Kenya, Trinidad and Tobago, Chile, El Salvador, Costa Rica, Ecuador, Haiti, Colombia, Dominican Republic (LHD), Panama, Peru, B. Virgin, Curacao, The Philippine, Cambodia, Laos, Syria, Ivory Coast, Nigeria, Angola, Kuwait, Oman, Qatar, Saudi Arabia, Bahrain, Jordan, Cameroon, Burundi, Gabon, Ghana, Tanzania, Mozambique, Vietnam

*1 Europe

Fuel with a lower rating will negatively affect the emission control system performance and could also cause engine knocking and serious engine damage.

⚠ CAUTION

- USE ONLY UNLEADED FUEL.
  Leaded fuel is harmful to the catalytic converter and oxygen sensors and will lead to deterioration of the emission control system and or failures.
- The use of E10 fuel with 10 % ethanol in Europe is safe for your vehicle. Damage to your vehicle may occur when ethanol exceeds this recommendation.
- Never add fuel system additives, otherwise the emission control system could be damaged. Consult an expert repairer, we recommend an Authorised Mazda Repairer for details.

▼Fuel Requirements (SKYACTIV-D 1.5)

The vehicle will operate efficiently on diesel fuel with specification EN590 or the equivalent.

⚠ CAUTION

- Never use fuel other than specification EN590 or the equivalent for your vehicle. Use of petrol or paraffin in diesel engines will result in engine damage.
- Never add fuel system additives. Otherwise, the emission control system could be damaged. Consult an expert repairer, we recommend an Authorised Mazda Repairer for details.

NOTE

When refuelling, always add at least 10 L (2.6 US gal, 2.2 Imp gal) of fuel.

▼Emission Control System (SKYACTIV-G 1.3, SKYACTIV-G 1.5)

This vehicle is equipped with an emission control system (the catalytic converter is part of this system) that enables the vehicle to comply with existing exhaust emissions requirements.

⚠ *WARNING*

Never park over or near anything flammable:
Parking over or near anything flammable, such as dry grass, is dangerous. Even with the engine turned off, the exhaust system remains very hot after normal use and could ignite anything flammable. A resulting fire could cause serious injury or death.

⚠ CAUTION

Ignoring the following precautions could cause lead to accumulate on the catalyst inside the converter or cause the converter to get very hot. Either condition will damage the converter and cause poor performance.

- USE ONLY UNLEADED FUEL.
- Do not drive your Mazda with any sign of engine malfunction.
- Do not coast with the ignition switched off.
- Do not descend steep grades in gear with the ignition switched off.
- Do not operate the engine at high idle for more than 2 minutes.
- Do not tamper with the emission control system. All inspections and adjustments must be made by a qualified technician.
- Do not push-start or pull-start your vehicle.

▼Emission Control System (SKYACTIV-D 1.5)

Your vehicle is equipped with an emission control system (the catalytic converter is part of this system) that enables your vehicle to comply with existing exhaust emissions requirements.

⚠ *WARNING*

Never park over or near anything flammable:
Parking over or near anything flammable, such as dry grass, is dangerous. Even with the engine turned off, the exhaust system remains very hot after normal use and could ignite anything flammable. A resulting fire could cause serious injury or death.

⚠ CAUTION

Ignoring the following precautions could cause lead to accumulate on the catalyst inside the converter or cause the converter to get very hot. Either condition will damage the converter and cause poor performance.

- Do not drive your Mazda with any sign of engine malfunction.
- Do not coast with the ignition switched off.
- Do not descend steep grades in gear with the ignition switched off.
- Do not operate the engine at high idle for more than 2 minutes.
- Do not tamper with the emission control system. All inspections and adjustments must be made by a qualified technician.
- Do not push-start or pull-start your vehicle.

▼Engine Exhaust (Carbon monoxide)

⚠ *WARNING*

Do not drive your vehicle if you smell exhaust gas inside the vehicle:
Engine exhaust gas is dangerous. This gas contains carbon monoxide (CO), which is colourless, odourless, and poisonous. When inhaled, it can cause loss of consciousness and death. If you smell exhaust gas inside the vehicle, keep all windows fully open and contact an expert repairer, we recommend an Authorised Mazda Repairer immediately.

Do not run the engine when inside an enclosed area:
Running the engine inside an enclosed area, such as a garage, is dangerous. Exhaust gas, which contains poisonous carbon monoxide, could easily enter the cabin. Loss of consciousness or even death could occur.

Open the windows or adjust the heating or cooling system to draw fresh air when idling the engine:
Exhaust gas is dangerous. When the vehicle is stopped with the windows closed and the engine running for a long time even in an open area, exhaust gas, which contains poisonous carbon monoxide, could enter the cabin. Loss of consciousness or even death could occur.

Clear snow from underneath and around your vehicle, particularly the tail pipe, before starting the engine:
Running the engine when a vehicle is stopped in deep snow is dangerous. The exhaust pipe could be blocked by the snow, allowing exhaust gas to enter the cabin. Because exhaust gas contains poisonous carbon monoxide, it could cause loss of consciousness or even death to occupants in the cabin.

Fuel-Filler Flap and Cap

⚠ WARNING

When removing the fuel-filler cap, loosen the cap slightly and wait for any hissing to stop, then remove it:
Fuel spray is dangerous. Fuel can burn skin and eyes and cause illness if ingested. Fuel spray is released when there is pressure in the fuel tank and the fuel-filler cap is removed too quickly.

Before refuelling, stop the engine, and always keep sparks and flames away from the filler neck:
Fuel vapour is dangerous. It could be ignited by sparks or flames causing serious burns and injuries.
Additionally, use of the incorrect fuel-filler cap or not using a fuel-filler cap may result in a fuel leak, which could result in serious burns or death in an accident.

Do not continue refuelling after the fuel pump nozzle shuts off automatically:
Continuing to add fuel after the fuel pump nozzle has shut off automatically is dangerous because overfilling the fuel tank may cause fuel overflow or leakage. Fuel overflow and leakage could damage the vehicle and if the fuel ignites it could cause a fire and explosion resulting in serious injury or death.

⚠ CAUTION

Always use only a designated Mazda fuel-filler cap or an approved equivalent, available at an expert repairer, we recommend an Authorised Mazda Repairer. The wrong cap can result in a serious malfunction of the fuel and emission control systems.

▼Fuel-Filler Flap

To open, pull the remote fuel-filler flap release.
To close, press the fuel-filler flap until it locks securely.

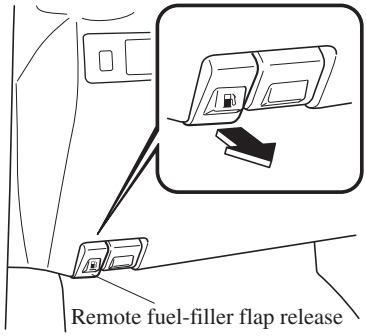

▼Fuel-Filler Cap

To remove the fuel-filler cap, turn it anticlockwise.
Attach the removed cap to the inner side of the fuel flap.

To close the fuel-filler cap, turn it clockwise until a click is heard.

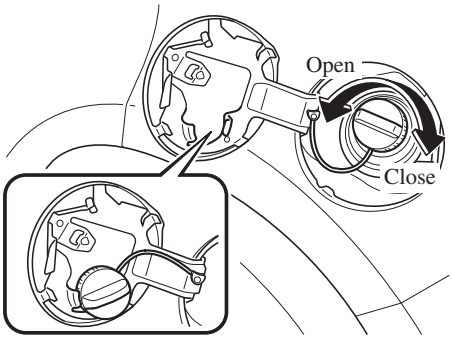

Steering Wheel

⚠ WARNING

Never adjust the steering wheel while the vehicle is moving:
Adjusting the steering wheel while the vehicle is moving is dangerous. Moving it can very easily cause the driver to abruptly turn to the left or right. This can lead to loss of control or an accident.

▼Steering Wheel Adjustment

To change the angle or length of the steering wheel:

1. Stop the vehicle, and then pull down the lock release lever under the steering column.

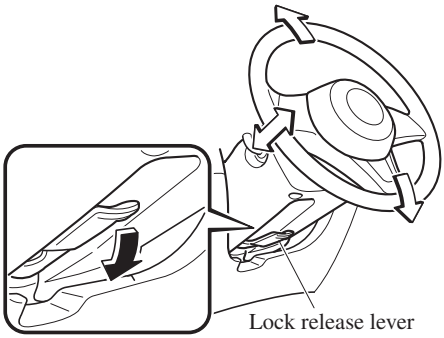

2. Tilt the steering wheel and/or adjust the steering column length to the desired positions, then push the lever up to lock the column.
3. Attempt to push the steering wheel up and down to make sure it's locked before driving.

NOTE

Make sure that the steering wheel is locked firmly in place. If it is difficult to raise the lever, lightly move the steering wheel forward and back to pull up the lever.

Mirrors

Before driving, adjust the inside and outside mirrors.

▼Outside Mirrors

⚠ *WARNING*

Be sure to look over your shoulder before changing lanes:
Changing lanes without taking into account the actual distance of the vehicle in the convex mirror is dangerous. You could have a serious accident. What you see in the convex mirror is closer than it appears.

NOTE

(Driver's Side Wide Angle Mirror*)

- The wide angle mirror has two curvatures on its surface separated by a region line into outer and inner regions. The inner region is a standard convex mirror whereas the outer region allows for a wider range of visibility within the same sweep. This combination allows for better assurance when making lane changes.

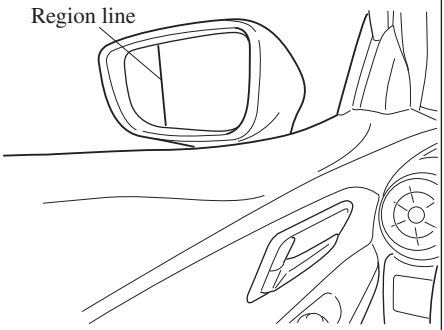

- The perceived distance of objects in the outer and inner regions of the wide angle mirror is different. Objects appearing in the outer region are actually further away than they are in the inner region.

*Some models.

Power mirror adjustment

The ignition must be switched to ACC or ON position.

To adjust:

1. Rotate the mirror switch to the left L or right R to choose the left or right side mirror.
2. Press the mirror switch in the appropriate direction.

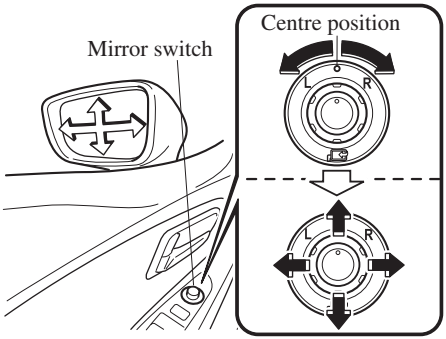

After adjusting the mirror, lock the control by rotating the switch to the centre position.

Folding mirror

⚠ *WARNING*

Always return the outside mirrors to the driving position before you start driving:
Driving with the outside mirrors folded in is dangerous. Your rear view will be restricted, and you could have an accident.

Manual folding mirror

Fold the outside mirror rearward until it is flush with the vehicle.

Power folding mirror

The ignition must be switched to ACC or ON position.

To fold, rotate the switch.

To return the mirror to the driving position, rotate the switch to the centre position.

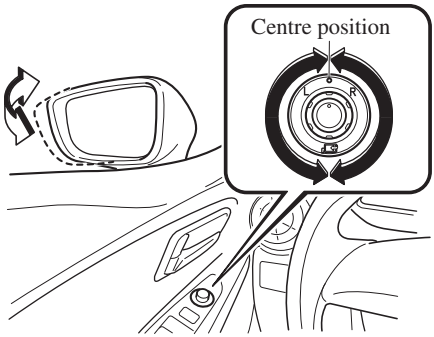

⚠ WARNING

Do not touch a power fold-in mirror while it is moving:
Touching the power fold-in mirror when it is moving is dangerous. Your hand could be pinched and injured or the mirror could be damaged.

Use the power fold-in switch to set the mirror to the on-road position:
Setting the power fold-in mirror to the on-road position by hand is dangerous. The mirror will not lock in position and will prevent effective rearview visibility.

Only operate the power fold-in mirror with the vehicle safely parked:
Operating the power fold-in mirror while the vehicle is moving is dangerous. Wind blast on the mirror will cause them to collapse and you will be unable to return it to the on-road position, preventing rearview visibility.

Engine-off outside mirror operation*

The outside mirrors can be operated for about 40 seconds after the ignition is switched from ON to off with all doors closed. If any door is opened, the outside mirrors will stop operating.

▼Rearview Mirror

⚠ WARNING

Do not stack cargo or objects higher than the seatbacks:
Cargo stacked higher than the seatbacks is dangerous. It can block your view in the rearview mirror, which might cause you to hit another car when changing lanes.

Rearview mirror adjustment

Before driving, adjust the rearview mirror to centre on the scene through the rear window.

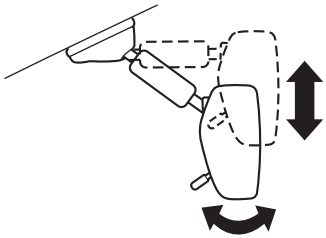

Reducing glare from headlights

Adjust the mirror with the antidazzle lever in the day position.
Push the antidazzle lever forward for day driving. Pull it back to reduce glare of headlights from vehicles at the rear.

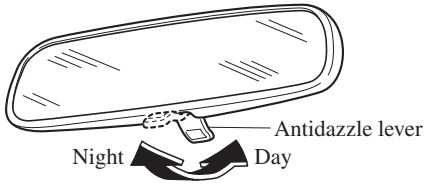

*Some models.

Power Windows

The ignition must be switched ON for the power windows to operate.

⚠ *WARNING*

Make sure the opening is clear before closing a window:
Closing a power window is dangerous. A person's hands, head, or even neck could be caught by the window and result in serious injury or even death. This warning applies especially to children.

Never allow children to play with power window switches:
Power window switches that are not locked with the power window lock switch would allow children to operate power windows unintentionally, which could result in serious injury if a child's hands, head or neck becomes caught by the window.

⚠ CAUTION

To prevent burning out the fuse and damaging the power window system, do not open or close more than three windows at once.

NOTE

A power window may no longer open/close if you continue to press the switch after fully opening/closing the power window. If the power window does not open/close, wait a moment and then operate the switch again.

▼ Operating the Driver's Side Power Window

Normal opening/closing

To open the window to the desired position, lightly hold down the switch.
To close the window to the desired position, lightly pull up the switch.

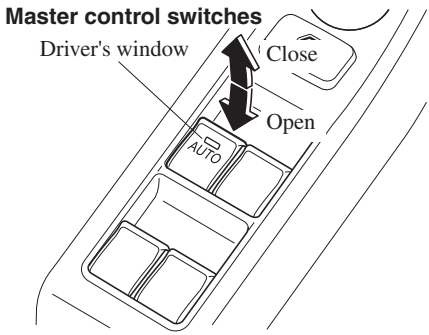

Auto-opening/closing

To fully open the window automatically, press the switch completely down, then release. The window will fully open automatically.
To fully close the window automatically, pull the switch completely up, then release. The window will fully close automatically.

To stop the window partway, pull or press the switch in the opposite direction and then release it.

Power window system initialization procedure

If the battery was disconnected during vehicle maintenance, or for other reasons (such as a switch continues to be operated after the window is fully open/closed), the window will not fully open and close automatically.
The power window auto function will only resume on a power window that has been reset.

1. Switch the ignition ON.
2. Make sure that the power window lock switch located on the driver's door is not depressed.
3. Press the switch and fully open the window.
4. Pull up the switch to fully close the window and continue holding the switch for about 2 seconds after the window fully closed.

Jam-safe window

If a person's hands, head or an object blocks the window during the auto-closing operation, the window will stop and open halfway.

⚠ *WARNING*

Make sure nothing blocks the window just before it reaches the fully closed position or while holding up the power window switch:
Blocking the power window just before it reaches the fully closed position or while holding up the power window switch is dangerous.
In this case, the jam-safe function cannot prevent the window from closing all the way. If fingers are caught, serious injuries could occur.

NOTE

- Depending on driving conditions, a closing power window could stop and start opening when the window feels a shock that is similar to something blocking it.
  In the event the jam-safe function activates and the power window cannot be closed automatically, pull and hold the switch and the window will close.
- The jam-safe window function does not operate until the system has been reset.

Engine-off power window operation

The power window can be operated for about 40 seconds after the ignition is switched from ON to off with all doors closed. If any door is opened, the power window will stop operating.

NOTE

For engine-off operation of the power window, the switch must be held up firmly throughout window closure because the auto-closing function will be inoperable.

▼Operating the Passenger Power Windows

To open the window to the desired position, hold down the switch.
To close the window to the desired position, pull up the switch.

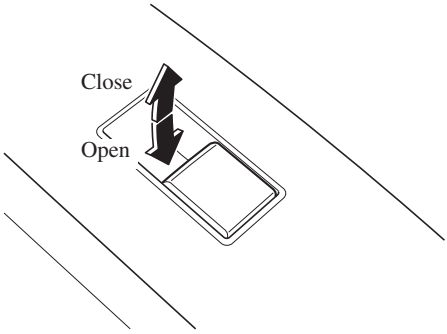

NOTE

- The power windows may be operated when the power window lock switch on the driver's door is in the unlocked position.
- The passenger windows may be opened or closed using the master control switches on the driver's door.

Master control switches

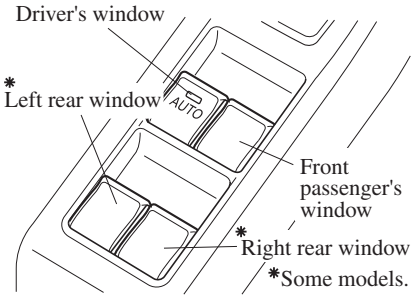

▼Power Window Lock Switch

This feature prevents all power windows from operating, except the driver's power window. Keep this switch in the locked position while children are in the vehicle.
Locked position (button depressed):
Only the driver's power window can be operated.
Unlocked position (button not depressed):
All power windows on each door can be operated.
(With door-lock switch)

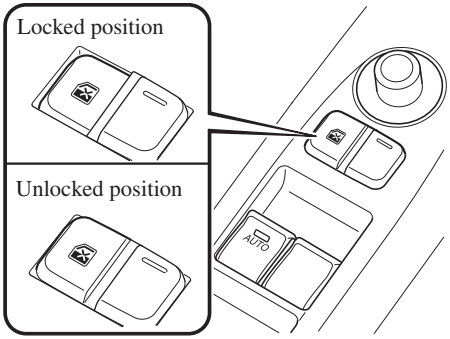

(Without door-lock switch)

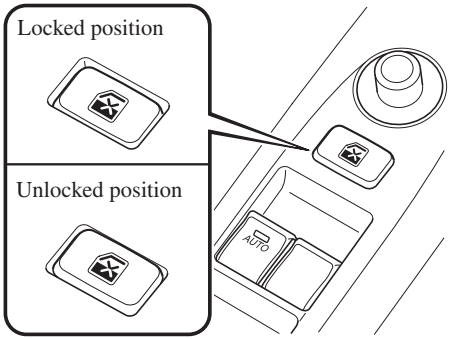

Manual Windows*

To open and close the window turn the handle on the door.

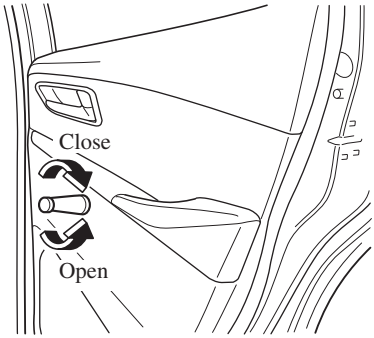

*Some models.

Modification and Add-On Equipment

Mazda cannot guarantee the immobilizer and the theft-deterrent systems' operation if the system has been modified or if any add-on equipment has been installed.

⚠ CAUTION

To avoid damage to the vehicle, do not modify the system or install any add-on equipment to the immobilizer and the theft-deterrent systems or the vehicle.

Immobilizer System

The immobilizer system allows the engine to start only with a key the system recognises.

If someone attempts to start the engine with an unrecognised key, the engine will not start, thereby helping to prevent vehicle theft.
If you have a problem with the immobilizer system or the key, consult an Authorised Mazda Repairer.

⚠ CAUTION

- Changes or modifications not expressly approved by the party responsible for compliance could void the user's authority to operate the equipment.
- To avoid damage to the key, do not:
  - Drop the key.
  - Get the key wet.
  - Expose the key to any kind of magnetic field.
  - Expose the key to high temperatures on places such as the instrument panel or bonnet, under direct sunlight.
- If the engine does not start with the correct key, and the security indicator light keeps illuminating or flashing, the system may have a malfunction. Consult an Authorised Mazda Repairer.

NOTE

- The keys carry a unique electronic code. For this reason, and to assure your safety, obtaining a replacement key requires some waiting time. They are only available through an Authorised Mazda Repairer.
- Always keep a spare key in case one is lost. If a key is lost, consult an Authorised Mazda Repairer as soon as possible.
- If you lose a key, an Authorised Mazda Repairer will reset the electronic codes of your remaining keys and immobilizer system. Bring all the remaining keys to an Authorised Mazda Repairer to reset. Starting the vehicle with a key that has not been reset is not possible.

▼Operation

NOTE

- The engine may not start and security indicator light may illuminate or flash if the key is placed in an area where it is difficult for the system to detect the signal, such as on the instrument panel or in the glove compartment. Move the key to a location within the signal range, switch the ignition off, and then restart the engine.
- Signals from a TV or radio station, or from a transceiver or mobile telephone could interfere with your immobilizer system. If you are using the proper key and the engine fails to start, check the security indicator light.

Arming

The system is armed when the ignition is switched from ON to off.
The security indicator light in the instrument cluster flashes every 2 seconds until the system is disarmed.

Disarming

The system is disarmed when the ignition is switched ON with the correct programmed key. The security indicator light illuminates for about 3 seconds and then turns off. If the engine does not start with the correct key, and the security indicator light remains illuminated or flashing, try the following:
Make sure the key is within the operational range for signal transmission.
Switch the ignition off, and then restart the engine. If the engine does not start after 3 or more tries, contact an Authorised Mazda Repairer.

NOTE

- If the security indicator light flashes continuously while you are driving, do not shut off the engine. Go to an Authorised Mazda Repairer and have it checked. If the engine is shut off while the indicator light is flashing, you will not be able to restart it.
- Because the electronic codes are reset when the immobilizer system is repaired, the keys are needed. Make sure to bring all the keys to an Authorised Mazda Repairer so that they can be programmed.

Theft-Deterrent System*

If the theft deterrent system detects an inappropriate entry into the vehicle or the intrusion sensor detects movement in the vehicle which could result in the vehicle (with the intrusion sensor) or its contents being stolen, the alarm alerts the surrounding area of an abnormality by sounding the siren/horn and flashing the hazard warning lights.

The system will not function unless it's properly armed. So when you leave the vehicle, follow the arming procedure correctly.

Intrusion sensor*

The intrusion sensor uses ultrasonic waves to detect movement inside the vehicle and to raise an alert of an intrusion into the vehicle.

The intrusion sensor detects certain kinds of movement inside the vehicle, however, it may also respond to phenomenon outside the vehicle such as vibrations, loud noise, wind, and air currents.

⚠ CAUTION

In order for the intrusion sensor to operate appropriately, be aware of the following:

- Do not hang clothing or objects from a head restraint or a coat hook.
- Return the extension sunvisors to their original positions.
- Do not blind the intrusion sensor by covering it or placing objects over it.
- Do not allow the intrusion sensor to get soiled or wipe it with a liquid.
- Do not shock or cause an impact to the intrusion sensor or the intrusion sensor bezel.
- Do not install seats or seat covers that are not Mazda genuine products.
- To prevent obstruction of intrusion sensor, do not place objects or cargo near the intrusion sensor that are higher than the head restraints.

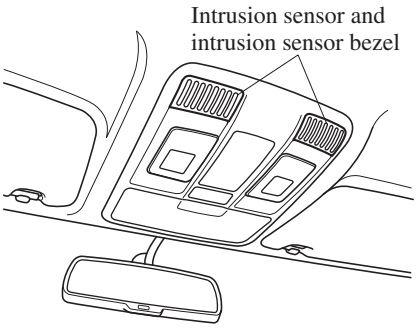

*Some models.

▼Operation

Siren/Horn triggering conditions

The siren/horn sounds intermittently and the hazard warning lights flash for about 30 seconds when the system is triggered by any one of the following:

- Unlocking a door with an inside door-lock knob.
- Forcing open a door, the bonnet or the liftgate/boot lid.
- Opening the bonnet by operating the bonnet release handle.
- Switching the ignition ON without using the push button start.
- **(With the intrusion sensor)**
  The intrusion sensor detects a movement in the vehicle.

The system will be triggered again (up to 10 times) if one of the above conditions remains.

- **(With the intrusion sensor)**
  Disconnecting the battery terminal (the hazard warning lights do not flash).

The system will be triggered about 10 times.

NOTE

- The liftgate/boot lid does not open while the theft-deterrent system is operating.
- If the battery goes dead while the theft-deterrent system is armed, the siren will activate and the hazard warning lights will flash when the battery is charged or replaced.

▼How to Arm the System

1. Close the windows securely.

NOTE

(With the intrusion sensor)
Even with a window open, the system can be armed, however, leaving the windows even partially open can invite theft, and wind blowing into the vehicle could trigger the alarm.
The intrusion sensor function can also be cancelled.
Refer to Cancelling the Intrusion Sensor (With Intrusion Sensor) on page 3-45.

2. Switch the ignition OFF.
3. Make sure the bonnet, the doors, and the liftgate/boot lid are closed.
4. Press the lock button on the transmitter or lock the driver's door from the outside with the auxiliary key.
   The hazard warning lights will flash once.
   (With the advanced keyless function)
   Press a request switch.

   The security indicator light in the instrument panel flashes twice per second for 20 seconds.

5. After 20 seconds, the system is fully armed.

NOTE

- The theft deterrent system can also be armed by activating the auto relock function with all the doors, the liftgate/boot lid and the bonnet closed.
  Refer to Transmitter on page 3-4.
- The system will disarm if one of the following operations takes place within 20 seconds after pressing the lock button:
  - Unlocking any door.
  - Opening any door.
  - Opening the bonnet.
  - Switching the ignition ON.
  - **(With the advanced keyless function)**
    Pressing the electric liftgate/boot lid opener while the key is being carried.

  To rearm the system, do the arming procedure again.
- When the doors are locked by pressing the lock button on the transmitter or using the auxiliary key while the theft-deterrent system is armed, the hazard warning lights will flash once to indicate that the system is armed.

▼Cancelling the Intrusion Sensor (With Intrusion Sensor)

If the theft deterrent system has been armed while any of the following conditions are present, cancel the intrusion sensor to prevent the alarm from triggering unnecessarily.

(Intrusion sensor)

- Leaving the vehicle with a movable object, passengers or pets remaining inside.
- Leaving an object inside the vehicle that can roll around, such as when the vehicle is placed on a tilting, unstable surface when being shipped.
- Hanging small objects/accessories in the vehicle, hanging clothing on a coat hook, or placing other items which can move easily inside the vehicle.
- Parking in an area where there is strong vibration or loud noise.
- When using a high pressure or automatic car wash.
- Continuous shock and vibration from hail or thunder and lightning is transmitted to the vehicle.
- Doors are locked with a window left open.
- An accessory heater or device that produces moving air and vibration operates while the theft deterrent system is armed.

NOTE

If any door or the liftgate/boot lid remains closed for 30 seconds, all the doors and the liftgate/boot lid automatically re-lock and the theft deterrent system arms even if a window is left open.

To cancel the intrusion sensor, press the intrusion sensor cancel button on the transmitter within 20 seconds after pressing the lock button.
The hazard warning lights will flash three times.

NOTE

- To reactivate the intrusion sensor, turn off the armed theft-deterrent system and then rearm it.
- The intrusion sensor is operational when the theft-deterrent system is armed. To cancel the intrusion sensor, press the intrusion sensor cancel button each time the theft-deterrent system is armed.

▼To Turn Off an Armed System

An armed system can be turned off using any one of the following methods:

- Pressing the unlock button on the transmitter.
- Starting the engine with the push button start.
- **(With the advanced keyless function)**
  - Pressing a request switch on the doors.

The hazard warning lights will flash twice.

NOTE

When the doors are unlocked by pressing the unlock button on the transmitter while the theft-deterrent system is turned off, the hazard warning lights will flash twice to indicate that the system is turned off.

▼To Stop the Alarm

A triggered alarm can be turned off using any one of the following methods:

- Pressing the unlock button or the boot button (saloon) on the transmitter.
- Starting the engine with the push button start.
- **(With the advanced keyless function)**
  - Pressing a request switch on the doors.
  - Pressing the electric liftgate/boot lid opener while the key is being carried.

The hazard warning lights will flash twice.

▼Theft-Deterrent Labels

A label indicating that your vehicle is equipped with a Theft-Deterrent System is in the glove compartment.

Mazda recommends that you affix it to the lower rear corner of a front door window.

Running-In

No special running-in is necessary, but a few precautions in the first 1,000 km (600 miles) may add to the performance, economy, and life of the vehicle.

- Do not race the engine.
- Do not maintain one constant speed, either slow or fast, for a long period of time.
- Do not drive constantly at full-throttle or high engine rpm for extended periods of time.
- Avoid unnecessary hard stops.
- Avoid full-throttle starts.
- Do not tow a trailer.

Saving Fuel and Protection of the Environment

How you operate your Mazda determines how far it will travel on a tank of fuel. Use these suggestions to help save fuel and reduce CO2.

- Avoid long warm-ups. Once the engine runs smoothly, begin driving.
- Avoid fast starts.
- Drive at lower speeds.
- Anticipate when to apply the brakes (avoid sudden braking).
- Follow the maintenance schedule (page 6-3) and have an expert repairer, we recommend an Authorised Mazda Repairer perform inspections and servicing.
- Use the air conditioner only when necessary.
- Slow down on rough roads.
- Keep the tyres properly inflated.
- Do not carry unnecessary weight.
- Do not rest your foot on the brake pedal while driving.
- Keep the wheels in correct alignment.
- Keep windows closed at high speeds.
- Slow down when driving in crosswinds and headwinds.

⚠ *WARNING*

Never stop the engine when going down a hill:
Stopping the engine when going down a hill is dangerous. This causes the loss of power steering and power brake control, and may cause damage to the drivetrain. Any loss of steering or braking control could cause an accident.

Hazardous Driving

⚠ *WARNING*

Be extremely careful if it is necessary to downshift on slippery surfaces:
Downshifting into lower gear while driving on slippery surfaces is dangerous. The sudden change in tyre speed could cause the tyres to skid. This could lead to loss of vehicle control and an accident.

When driving on ice or in water, snow, mud, sand, or similar hazards:

- Be cautious and allow extra distance for braking.
- Avoid sudden braking and sudden manoeuvring.
- Do not pump the brakes. Continue to press down on the brake pedal.
  Refer to Antilock Brake System (ABS) on page 4-84.
- If you get stuck, select a lower gear and accelerate slowly. Do not spin the front wheels.
- For more traction in starting on slippery surfaces such as ice or packed snow, use sand, rock salt, chains, carpeting, or other nonslip material under the front wheels.

NOTE

Use snow chains only on the front wheels.

Floor Mat

⚠ WARNING

Make sure the floor mats are secured with the grommets or the retainers to prevent them from bunching up under the foot pedals (Driver's side):
Using a floor mat that is not secured is dangerous as it will interfere with the accelerator and brake pedal operation (driver's side), which could result in an accident.

Only use a floor mat which conforms to the shape of the floor on the driver's side and make sure it is oriented correctly.
Secure the floor mat using the grommets or retainers.
There are various ways to secure floor mats depending on the type used, therefore secure the mat according to the type.
After installing the floor mat, make sure that it does not slide from side to side or back and forth, and that there is sufficient clearance with the accelerator and brake pedals on the driver's side.

After removing the floor mat for cleaning or some other reason, always securely reinstall it while paying attention to the precautions just mentioned.

⚠ WARNING

Do not install two floor mats, one on top of the other, on the driver's side:
Installing two floor mats, one on top of the other, on the driver's side is dangerous as the retention pins can only keep one floor mat from sliding forward.

Loose floor mat(s) will interfere with the foot pedals and could result in an accident.

When using a heavy duty floor mat for winter, always remove the original floor mat.

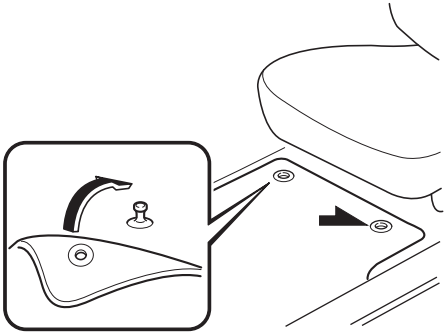

When setting a floor mat, position the floor mat so that its grommets or retainers are inserted over the pointed end of the retention posts.

Rocking the Vehicle

⚠ *WARNING*

Do not spin the wheels at high speed, and do not allow anyone to stand behind a wheel when pushing the vehicle:
When the vehicle is stuck, spinning the wheels at high speed is dangerous. The spinning tyre could overheat and explode. This could cause serious injuries.

⚠ CAUTION

Too much rocking may cause engine overheating, transaxle failure, and tyre damage.

If you must rock the vehicle to free it from snow, sand or mud, depress the accelerator slightly and slowly move the shift lever from 1 (D) to R.

Winter Driving

Carry emergency gear, including tyre chains, window scraper, flares, a small shovel, jumper leads, and a small bag of sand or salt.
Ask an expert repairer, we recommend an Authorised Mazda Repairer to check the following:

- Have the proper ratio of antifreeze in the radiator.
  Refer to Engine Coolant on page 6-29.
- Inspect the battery and its leads. Cold reduces battery capacity.
- Use an engine oil appropriate for the lowest ambient temperatures that the vehicle will be driven in (page 6-23).
- Inspect the ignition system for damage and loose connections.
- Use washer fluid made with antifreeze—but do not use engine coolant antifreeze for washer fluid (page 6-32).

NOTE

- Do not use the parking brake in freezing weather as it may freeze. Instead, shift to P with an automatic transaxle and to 1 or R with a manual transaxle. Block the rear wheels.
- Remove snow before driving. Snow left on the windscreen is dangerous as it could obstruct vision.
- Do not apply excessive force to a window scraper when removing ice or frozen snow on the mirror glass and windscreen.
- Never use warm or hot water for removing snow or ice from windows and mirrors as it could result in the glass cracking.
- Drive slowly. Braking performance can be adversely affected if snow or ice adheres to the brake components. If this situation occurs, drive the vehicle slowly, releasing the accelerator pedal and lightly applying the brakes several times until the brake performance returns to normal.

▼Snow Tyres

⚠ *WARNING*

Use only the same size and type tyres (snow, radial, or non-radial) on all four wheels:
Using tyres different in size or type is dangerous. Your vehicle's handling could be greatly affected and result in an accident.

⚠ CAUTION

Check local regulations before using studded tyres.

Use snow tyres on all four wheels

Do not exceed the maximum permissible speed for your snow tyres or legal speed limits.

Europe

When snow tyres are used, select the specified size and pressure (page 9-10).

▼Tyre Chains

Check local regulations before using tyre chains.

⚠ CAUTION

- Chains may affect handling.
- Do not go faster than 50 km/h (30 mph) or the chain manufacturer's recommended limit, whichever is lower.
- Drive carefully and avoid bumps, holes, and sharp turns.
- Avoid locked-wheel braking.
- Do not use chains on a temporary spare tyre; it may result in damage to the vehicle and to the tyre.
- Do not use chains on roads that are free of snow or ice. The tyres and chains could be damaged.
- Chains may scratch or chip aluminium wheels.

NOTE

- If your vehicle is equipped with the tyre pressure monitoring system, the system may not function correctly when using tyre chains.
- Use of tyre chains on a vehicle equipped with 185/60R16 tyres could cause interference with the vehicle body and scratching. If tyre chains are to be used, replace both the front and rear tyres with 185/65R15 tyres and replace both the front and rear wheels with genuine Mazda 15-inch wheels of the same size, and use genuine Mazda tyre chains. Consult an expert repairer, we recommend an Authorised Mazda Repairer.

Install the chains on the front tyres only. Do not use chains on the rear tyres.

Tyre chain selection (Europe)

Mazda recommends hexagon type steel ring chains. Select the proper type according to your tyre size.

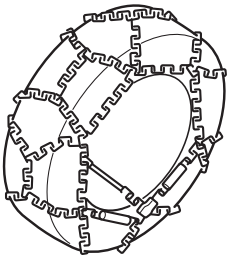

Tyre size	Tyre chain
185/65R15	Hexagon type

NOTE

Although Mazda recommends hexagon type steel ring chains, all chains within the installation specifications may be used.

Installation specification (Europe)

When installing tyre chains, the distance between the tyre tread and the chain must be within the prescribed limits in the following table.

Distance [Unit: mm (in)]	
A	B
MAX 11 (0.43)	MAX 11 (0.43)

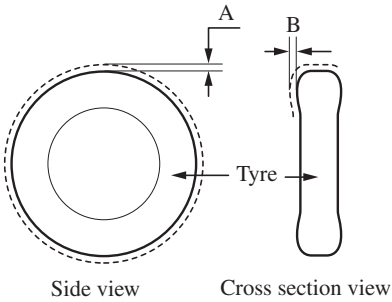

Installing the chains

1. If your vehicle is equipped with wheel covers remove them, otherwise the chain bands will scratch them.
2. Secure the chains on the front tyres as tightly as possible. Always follow the chain manufacturer's instructions.
3. Retighten the chains after driving 1/2—1 km (1/4—1/2 mile).

Driving In Flooded Area

⚠ *WARNING*

Dry off brakes that have become wet by driving slowly, releasing the accelerator pedal and lightly applying the brakes several times until the brake performance returns to normal:
Driving with wet brakes is dangerous. Increased stopping distance or the vehicle pulling to one side when braking could result in a serious accident. Light braking will indicate whether the brakes have been affected.

⚠ CAUTION

Do not drive the vehicle on flooded roads as it could cause short circuiting of electrical/electronic parts, or engine damage or stalling from water absorption. If the vehicle has been immersed in water, consult an expert repairer, we recommend an Authorised Mazda Repairer.

Turbocharger Information (SKYACTIV-D 1.5)

⚠ CAUTION

- After driving at freeway speeds or up a long hill, idle the engine at least 30 seconds before stopping it. Otherwise, the turbocharger could be damaged. However, when i-stop operates, idling is unnecessary.
- Racing or over-revving the engine, particularly after it's just been started, can damage the turbocharger.
- To protect the engine from damage, the engine is designed so that it cannot be raced just after starting it in extremely cold weather.

The turbocharger greatly enhances engine power. Its advanced design provides improved operation and requires minimum maintenance.

To get the most from it, observe the following.

1. Change engine oil and filter according to Scheduled Maintenance (page 6-3).
2. Use only recommended engine oil (page 6-23). Extra additives are NOT recommended.

Towing Caravans and Trailers (Europe/Russia/Turkey/Israel/South Africa)

Your Mazda was designed and built primarily to carry passengers and cargo.
If you tow a trailer, follow these instructions because driver and passenger safety depends on proper equipment and safe driving habits. Towing a trailer will affect handling, braking, durability, performance, and economy.
Never overload vehicle or trailer. Consult an Authorised Mazda Dealer if you need further details.

⚠ CAUTION

- Do not tow a trailer during the first 1,000 km (600 miles) of your new Mazda. If you do, you may damage the engine, transaxle, differential, wheel bearings, and other power train components.
- Damage caused by towing a trailer/caravan is not covered by the vehicle's warranty for the following models and countries:
  - All models in Turkey
  - Saloon models

▼Weight Limits

The total trailer weight, gross combination weight and trailer nose weight must be within the prescribed limits in the Trailer Towing-Load Table.

TOTAL TRAILER WEIGHT:

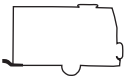

Sum of weights of the trailer and its load.

GROSS COMBINATION WEIGHT:

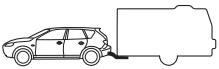

Sum of total trailer weight and towing vehicle weight; including trailer hitch, vehicle passengers, and vehicle load.

TRAILER NOSE WEIGHT:

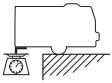

The weight exerted on the trailer tongue. It is varied by changing the weight distribution when loading the trailer.

⚠ CAUTION

Be aware of the towing load weight differences when towing at high altitudes. For altitudes exceeding 1,000 m, always reduce the towing load by 10% for every 1,000 m increase in altitude from the load indicated under the gross combination weight heading in the maximum trailer towing-load table. If the determined maximum total towing load weight is exceeded, the engine and other power train parts may be damaged.

Maximum trailer towing-load table

Europe/Gradient up to 12%

MODEL					TOTAL TRAILER WEIGHT		GROSS COMBINATION WEIGHT
Engine*1	Transaxle	Emission level	i-stop system	i-ELOOP system	Trailer without brake	Trailer with brake	Trailer with brake
SKYACTIV-G 1.5 LP	Manual transaxle	EURO6	—	—	515 kg (1,135.3 lb)	900 kg (1,984.1 lb)	2,400 kg (5,291.0 lb)
SKYACTIV-G 1.5 LP	Manual transaxle	EURO6	×	—	515 kg (1,135.3 lb)	900 kg (1,984.1 lb)	2,400 kg (5,291.0 lb)
SKYACTIV-G 1.5 MP	Manual transaxle	EURO6	×	—	515 kg (1,135.3 lb)	900 kg (1,984.1 lb)	2,405 kg (5,302.0 lb)
SKYACTIV-G 1.5 MP	Automatic transaxle	EURO6	×	—	530 kg (1,168.4 lb)	900 kg (1,984.1 lb)	2,435 kg (5,368.2 lb)
SKYACTIV-G 1.5 HP	Manual transaxle	EURO6	×	—	515 kg (1,135.3 lb)	900 kg (1,984.1 lb)	2,405 kg (5,302.0 lb)
SKYACTIV-G 1.5 HP	Automatic transaxle	EURO6	×	—	530 kg (1,168.4 lb)	900 kg (1,984.1 lb)	2,435 kg (5,368.2 lb)
SKYACTIV-G 1.5 HP	Manual transaxle	EURO6	×	×	515 kg (1,135.3 lb)	900 kg (1,984.1 lb)	2,410 kg (5,313.0 lb)
SKYACTIV-D 1.5	Manual transaxle	EURO6	×	—	550 kg (1,212.5 lb)	900 kg (1,984.1 lb)	2,475 kg (5,456.3 lb)
SKYACTIV-D 1.5	Manual transaxle	EURO6	×	×	555 kg (1,223.5 lb)	900 kg (1,984.1 lb)	2,490 kg (5,489.4 lb)

×: Available
—: Not available

TRAILER NOSE WEIGHT: 50 kg (110.2 lb)

*1 The alphabetical letters at the end of the engine types are short for the following:
LP: Low-Power
MP: Medium-Power
HP: High-Power

Germany and Austria/Gradient up to 8%

MODEL					TOTAL TRAILER WEIGHT		GROSS COMBINATION WEIGHT
Engine*1	Transaxle	Emission level	i-stop system	i-ELOOP system	Trailer without brake	Trailer with brake	Trailer with brake
SKYACTIV-G 1.5 LP	Manual transaxle	EURO6	—	—	515 kg (1,135.3 lb)	1,100 kg (2,425.0 lb)	2,600 kg (5,731.9 lb)
SKYACTIV-G 1.5 LP	Manual transaxle	EURO6	×	—	515 kg (1,135.3 lb)	1,100 kg (2,425.0 lb)	2,600 kg (5,731.9 lb)
SKYACTIV-G 1.5 MP	Manual transaxle	EURO6	×	—	515 kg (1,135.3 lb)	1,100 kg (2,425.0 lb)	2,605 kg (5,742.9 lb)
SKYACTIV-G 1.5 MP	Automatic transaxle	EURO6	×	—	530 kg (1,168.4 lb)	1,000 kg (2,204.6 lb)	2,535 kg (5,588.6 lb)
SKYACTIV-G 1.5 HP	Manual transaxle	EURO6	×	—	515 kg (1,135.3 lb)	1,100 kg (2,425.0 lb)	2,605 kg (5,742.9 lb)
SKYACTIV-G 1.5 HP	Automatic transaxle	EURO6	×	—	530 kg (1,168.4 lb)	1,000 kg (2,204.6 lb)	2,535 kg (5,588.6 lb)
SKYACTIV-G 1.5 HP	Manual transaxle	EURO6	×	×	515 kg (1,135.3 lb)	1,100 kg (2,425.0 lb)	2,610 kg (5,754.0 lb)
SKYACTIV-D 1.5	Manual transaxle	EURO6	×	—	550 kg (1,212.5 lb)	1,100 kg (2,425.0 lb)	2,675 kg (5,897.3 lb)
SKYACTIV-D 1.5	Manual transaxle	EURO6	×	×	555 kg (1,223.5 lb)	1,100 kg (2,425.0 lb)	2,690 kg (5,930.3 lb)

×: Available
—: Not available

TRAILER NOSE WEIGHT: 50 kg (110.2 lb)

*1 The alphabetical letters at the end of the engine types are short for the following:
LP: Low-Power
MP: Medium-Power
HP: High-Power

Russia/Gradient up to 12%

MODEL					TOTAL TRAILER WEIGHT		GROSS COMBINATION WEIGHT
Engine*1	Transaxle	Emission level	i-stop system	i-ELOOP system	Trailer without brake	Trailer with brake	Trailer with brake
SKYACTIV-G 1.5 LP	Manual transaxle	EURO5	—	—	500 kg (1,102.3 lb)	900 kg (1,984.1 lb)	2,385 kg (5,257.9 lb)
SKYACTIV-G 1.5 LP	Automatic transaxle	EURO5	—	—	500 kg (1,102.3 lb)	900 kg (1,984.1 lb)	2,420 kg (5,335.1 lb)
SKYACTIV-G 1.5 HP	Automatic transaxle	EURO5	—	—	500 kg (1,102.3 lb)	900 kg (1,984.1 lb)	2,420 kg (5,335.1 lb)
SKYACTIV-G 1.5 HP	Automatic transaxle	EURO5	—	×	500 kg (1,102.3 lb)	900 kg (1,984.1 lb)	2,430 kg (5,357.1 lb)

×: Available
—: Not available

TRAILER NOSE WEIGHT: 50 kg (110.2 lb)

*1 The alphabetical letters at the end of the engine types are short for the following:
LP: Low-Power
HP: High-Power

Israel/Gradient up to 12% (Hatchback only)

MODEL					TOTAL TRAILER WEIGHT		GROSS COMBINATION WEIGHT
Engine	Transaxle	Emission level	i-stop system	i-ELOOP system	Trailer without brake	Trailer with brake	Trailer with brake
SKYACTIV-G 1.5	Manual transaxle	EURO6	—	—	535 kg (1,179.4 lb)	750 kg (1,653.4 lb)	2,253 kg (4,966.9 lb)
SKYACTIV-G 1.5	Automatic transaxle	EURO6	—	—	540 kg (1,190.4 lb)	750 kg (1,653.4 lb)	2,270 kg (5,004.4 lb)
SKYACTIV-D 1.5	Automatic transaxle	EURO6	×	—	500 kg (1102.3 lb)	750 kg (1,653.4 lb)	2,362 kg (5,207.2 lb)

×: Available
—: Not available

TRAILER NOSE WEIGHT: 50 kg (110.2 lb)

South Africa/Gradient up to 12% (Hatchback only)

MODEL					TOTAL TRAILER WEIGHT		GROSS COMBINATION WEIGHT
Engine	Transaxle	Emission level	i-stop system	i-ELOOP system	Trailer without brake	Trailer with brake	Trailer with brake
SKYACTIV-G 1.5	Manual transaxle	EURO4	—	—	450 kg (992.0 lb)	750 kg (1,653.4 lb)	2,246 kg (4,951.5 lb)
SKYACTIV-G 1.5	Automatic transaxle	EURO4	—	—	250 kg (551.1 lb)	250 kg (551.1 lb)	1,765 kg (3,891.1 lb)
SKYACTIV-D 1.5	Automatic transaxle	EURO4	×	—	130 kg (286.5 lb)	130 kg (286.5 lb)	1,735 kg (3,824.9 lb)

×: Available
—: Not available
TRAILER NOSE WEIGHT: 50 kg (110.2 lb)

⚠ *WARNING*

Always keep tow loads within specified limits as indicated in the Trailer Towing-Load Table:
Attempting to tow loads greater than those specified is dangerous as it may cause serious handling and performance problems that could result in personal injury or vehicle damage, or both.

Always keep the trailer nose weight within the specified limits in the Trailer Towing-Load Table:
Loading the trailer with more weight in the rear than in the front is dangerous. This could cause loss of vehicle control and an accident.

NOTE

- The total trailer weight and nose weight can be determined by weighing the trailer on platform scales at a highway weighing station or a trucking company.
- Appropriate total trailer weight and nose weight may prevent the danger of trailer sway from crosswinds, rough roads, or other causes.

▼Trailer Hitch

When towing a trailer, use an appropriate trailer hitch. We recommend using a genuine Mazda trailer hitch. Use the original holes drilled by the vehicle manufacture for securing the trailer hitch. Contact your Authorised Mazda Dealer for more information.

Trailer hitch installation area

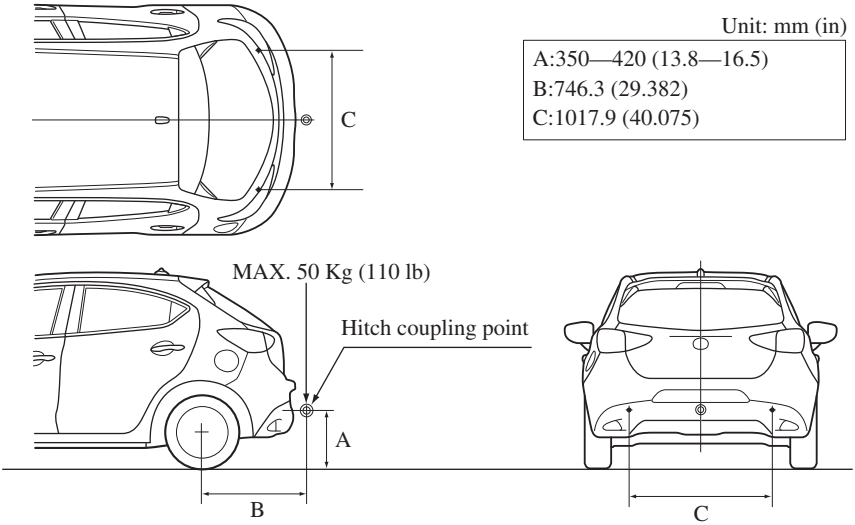

▼Tyres

When towing a trailer, make sure all tyres are inflated to the recommended cold-tyre pressure, as indicated on the tyre pressure chart on the driver's door frame. Trailer tyre size, load rating, and inflation pressures should conform to tyre manufacturer specifications.

⚠ *WARNING*

Never use the temporary spare tyre when towing:
Using the temporary spare tyre on your vehicle when towing a trailer is dangerous as it could result in tyre failure, loss of control, and injury to vehicle occupants.

▼Safety Chains

Safety chains must be used as a precautionary measure should the trailer become unintentionally unhitched. They should cross under the trailer tongue and attach to the hitch. Leave enough slack to allow full turns. Consult literature published by your trailer or hitch manufacturer for more details.

⚠ *WARNING*

Make sure the safety chain is securely attached to both the trailer and the vehicle prior to departure:
Towing a trailer without using a safety chain securely attached to both the trailer and the vehicle is dangerous. If damage occurs to the coupling unit or hitch ball, the trailer could wander into another lane and cause a collision.

▼Trailer Lights

⚠ CAUTION

Do not connect a trailer lighting system directly to the lighting system of your Mazda. This may damage your vehicle's electrical system and lighting systems. To connect the lighting system, consult an Authorised Mazda Dealer.

▼Trailer Brakes

Check the Maximum trailer towing-load table in Weight Limits (page 3-55), and if your trailer weight exceeds the value in the TOTAL TRAILER WEIGHT (Trailer without brake), trailer brakes are required.
If your trailer has brakes, make sure they meet regulations.

⚠ *WARNING*

Do not connect a hydraulic trailer-brake system to your vehicle's brake system:
Connecting a hydraulic trailer-brake system directly to the vehicle brake system is dangerous and will result in inadequate braking and possible injury.

▼Trailer Towing Tips

Before driving

- Verify that your Mazda maintains a near-normal attitude when a loaded or unloaded trailer is connected. Do not drive if it has an abnormal front-up or front-down position. Inspect for incorrect nose weight, worn suspension parts, and trailer overloading. Have the vehicle inspected by an expert repairer, we recommend an Authorised Mazda Repairer.
- Make sure the trailer cargo is secure to prevent it from shifting.
- Make sure the mirrors meet all government regulations. Inspect them.
- Before starting out, inspect the operation of all vehicle and trailer lights and all vehicle-to-trailer connections. Stop and re-inspect all lights and connections after driving a short distance.

Driving

- Your Mazda will handle differently with a trailer in tow, so practice turning, backing, and stopping in a traffic-free area.
- Take time to get accustomed to the extra weight and length.
- Do not exceed 100 km/h (62 mph) with a trailer in tow. If the local legal maximum speed with a trailer in tow is less than 100 km/h (62 mph), do not exceed the legal speed.

⚠ CAUTION

If the vehicle exceeds 100 km/h (62 mph) with a trailer in tow, the vehicle could be damaged.

- When ascending a hill, shift into a lower gear to reduce the possibility of overloading or overheating the engine, or both.
- When descending a hill, shift into a lower gear and use engine compression as a braking effect. Pay constant attention to speed and use the brakes only as needed. Holding the brake pedal down for a prolonged period may cause the brakes to overheat and lose power.

Parking

Avoid parking on an incline with a trailer. If this must be done, follow these instructions.

Parking on an Incline

1. Set the parking brake and the brakes.
2. Have someone block the wheels of the vehicle and trailer while you apply the brakes.
3. After the wheels are blocked, release the parking brake and the brakes slowly, allowing the blocks to bear the load.
4. Set the parking brake firmly.
5. If the vehicle has an automatic transaxle, put the selector lever in P. If it has a manual transaxle, place the gear shift in 1 or R.

Starting on an Incline

1. Start the engine (page 4-5).
2. Release the parking brake and slowly pull away a short distance from the wheel blocks.
3. Stop on the nearest level ground, set the parking brake, and pick up the wheel blocks.

4 When Driving

Information concerning safe driving and stopping.

Start/Stop Engine 4-4
Ignition Switch..... 4-4
Starting the Engine..... 4-5
Turning the Engine Off 4-11
i-stop* 4-13

Instrument Cluster and Display 4-24
Meters and Gauges..... 4-24
Active Driving Display*..... 4-36
Warning/Indicator Lights 4-38

Transaxle..... 4-45
Manual Transaxle Operation..... 4-45
Automatic Transaxle Controls 4-48

Switches and Controls 4-60
Lighting Control..... 4-60
Front Fog Lights* 4-67
Rear Fog Light*..... 4-68
Turn and Lane-Change Signals.... 4-70
Windscreen Wipers and Washer..... 4-71
Rear Window Wiper and Washer*..... 4-75
Headlight Washer*..... 4-75
Rear Window Defogger 4-76
Horn 4-77
Hazard Warning Flasher..... 4-77

Brake 4-79
Brake System 4-79
Emergency Stop Signal System ... 4-82
Hill Launch Assist (HLA)*..... 4-82

ABS/TCS/DSC..... 4-84
Antilock Brake System (ABS)..... 4-84
Traction Control System (TCS)* 4-85
Dynamic Stability Control (DSC)*..... 4-86

i-ELOOP 4-88
i-ELOOP* 4-88

Fuel Economy Monitor..... 4-91
Fuel Economy Monitor*..... 4-91

Drive Selection..... 4-97
Drive Selection* 4-97

Power Steering..... 4-99
Power Steering..... 4-99

*Some models.

i-ACTIVSENSE..... 4-100
i-ACTIVSENSE*..... 4-100
High Beam Control System (HBC)*..... 4-102
Lane Departure Warning System (LDWS)* 4-105
Blind Spot Monitoring (BSM) System*..... 4-111
Rear Cross Traffic Alert (RCTA)* 4-118
Adjustable Speed Limiter* 4-121
Smart City Brake Support (SCBS)*..... 4-126
Forward Sensing Camera (FSC)*..... 4-132
Laser Sensor*..... 4-134
Radar Sensors (Rear)* 4-136

Cruise Control..... 4-138
Cruise Control*..... 4-138

Tyre Pressure Monitoring System... 4-143
Tyre Pressure Monitoring System*..... 4-143

Diesel Particulate Filter (SKYACTIV-D 1.5) 4-147
Diesel Particulate Filter (SKYACTIV-D 1.5) 4-147

Rear View Monitor..... 4-148
Rear View Monitor* 4-148

Parking Sensor System 4-157
Parking Sensor System* 4-157

 *Some models.

MEMO

Ignition Switch

▼Push Button Start Positions

The system operates only when the driver is in the vehicle or within operational range while the key is being carried.
Each time the push button start is pressed, the ignition switches in the order of off, ACC, and ON. Pressing the push button start again from ON switches the ignition off.

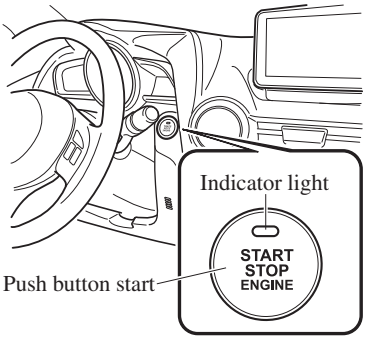

NOTE

- The engine starts by pressing the push button start while depressing the clutch pedal (manual transaxle) or the brake pedal (automatic transaxle). To switch the ignition position, press the push button start without depressing the pedal.
- Do not leave the ignition switched ON while the engine is not running. Doing so could result in the battery going dead. If the ignition is left in ACC (For automatic transaxle, the selector lever is in the P position, and the ignition is in ACC), the ignition switches off automatically after about 25 minutes.

Off

The power supply to electrical devices turns off and the push button start indicator light (amber) also turns off.
In this position the steering wheel is locked.

⚠ *WARNING*

Before leaving the driver's seat, always switch the ignition off, set the parking brake, and make sure the selector lever is in P (automatic transaxle) or in 1st gear or R (manual transaxle):
Leaving the driver's seat without switching the ignition off, setting the parking brake, and shifting the selector lever to P (automatic transaxle) or to 1st gear or R (manual transaxle) is dangerous. Unexpected vehicle movement could occur which could result in an accident.
In addition, if your intention is to leave the vehicle for even a short period, it is important to switch the ignition off, as leaving it in another position will disable some of the vehicle's security systems and run the battery down.

NOTE

(Locked steering wheel)
If the push button start indicator light (green) is flashing and the beep sound is heard, this indicates that the steering wheel is not unlocked. To unlock the steering wheel, press the push button start while moving the steering wheel left and right.

ACC (Accessory)

Some electrical accessories will operate and the indicator light (amber) illuminates. In this position the steering wheel is unlocked.

NOTE

The keyless entry system does not function while the push button start has been pressed to ACC, and the doors will not lock/unlock even if they have been locked manually.

ON

This is the normal running position after the engine is started. The indicator light (amber) turns off. (The indicator light (amber) illuminates when the ignition is switched ON and the engine is not running.)
Some indicator lights/warning lights should be inspected before the engine is started (page 4-38).

NOTE

(SKYACTIV-G 1.3, SKYACTIV-G 1.5)
When the push button start is pressed to ON, the sound of the fuel pump motor operating near the fuel tank can be heard. This does not indicate an abnormality.

Starting the Engine

⚠ *WARNING*

Radio waves from the key may affect medical devices such as pacemakers:
Before using the key near people who use medical devices, ask the medical device manufacturer or your physician if radio waves from the key will affect the device.

NOTE

- The key must be carried because the key carries an immobilizer chip that must communicate with the engine controls at short range.
- The engine can be started when the push button start is pressed from off, ACC, or ON.

NOTE

- The push button start system functions (function which can start the engine by only carrying the key) can be deactivated to prevent any possible adverse effect on a user wearing a pacemaker or other medical device. If the system is deactivated, you will be unable to start the engine by carrying the key. Consult an expert repairer, we recommend an Authorised Mazda Repairer for details. If the push button start system functions have been deactivated, you can start the engine by following the procedure indicated when the key battery goes dead.
  Refer to Engine Start Function When Key Battery is Dead on page 4-9.
- After starting a cold engine, the engine speed increases and a whining sound from the engine compartment can be heard.
  This is for improved exhaust gas purification and does not indicate defect of the parts.

1. Make sure you are carrying the key.
2. Occupants should fasten their seat belts.
3. Make sure the parking brake is on.
4. Continue to press the brake pedal firmly until the engine has completely started.
5. **(Manual transaxle)**
   Continue to press the clutch pedal firmly until the engine has completely started.
   (Automatic transaxle)
   Put the vehicle in park (P). If you must restart the engine while the vehicle is moving, shift into neutral (N).

NOTE

(Manual transaxle)
The starter will not operate if the clutch pedal is not depressed sufficiently.
(Automatic transaxle)
The starter will not operate if the selector lever is not in P or N and the brake pedal is not depressed sufficiently.

6. Verify that the KEY indicator light (green) in the instrument cluster and the push button start indicator light (green) illuminate.

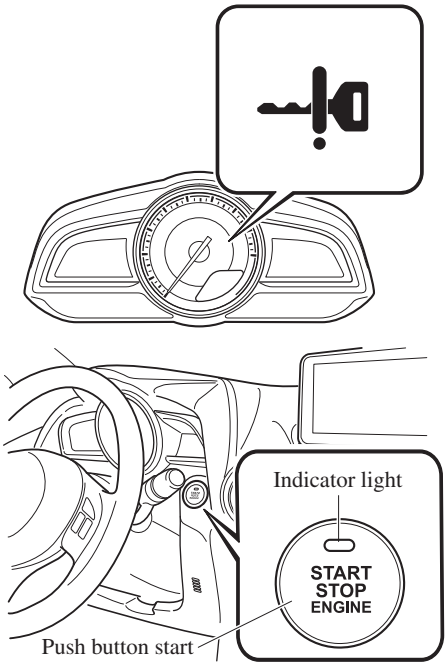

NOTE

- If the push button start indicator light (green) flashes, make sure that the key is being carried.
- If the push button start indicator light (green) flashes with the key being carried, touch the key to the push button start and start the engine. Refer to Engine Start Function When Key Battery is Dead on page 4-9.

⚠ CAUTION

If the KEY warning light (red) illuminates, or the push button start indicator light (amber) flashes, this could indicate a problem with the engine starting system and the inability to start the engine or switch the ignition to ACC or ON. Have your vehicle inspected at an expert repairer, we recommend an Authorised Mazda Repairer as soon as possible.

NOTE

- Under the following conditions, the KEY warning light (red) flashes after the push button start is pressed to inform the driver that the push button start will not switch to ACC even if it is pressed from off.
  - The key battery is dead.
  - The key is out of operational range.
  - The key is placed in areas where it is difficult for the system to detect the signal (page 3-7).
  - A key from another manufacturer similar to the key is in the operational range.
- **(Forced engine starting method)**
  If the KEY warning light (red) illuminates, or the push button start indicator light (amber) flashes, this could indicate that the engine may not start using the usual starting method. Have your vehicle inspected at an expert repairer, we recommend an Authorised Mazda Repairer as soon as possible. If this occurs, the engine can be force-started. Press and hold the push button start until the engine starts. Other procedures necessary for starting the engine such as having the key in the cabin, and depressing the clutch pedal (manual transaxle) or the brake pedal (automatic transaxle) are required.

NOTE

- When the engine is force-started, the KEY warning light (red) remains illuminated and the push button start indicator light (amber) remains flashing.
- **(Automatic transaxle)**
  When the selector lever is in the neutral (N) position, the KEY indicator light (green) and the push button start indicator light (green) do not illuminate.

7. Press the push button start after both the KEY indicator light (green) in the instrument cluster and the push button start indicator light (green) illuminate.

NOTE

- After starting the engine, the push button start indicator light (amber) turns off and the ignition switches to the ON position.
- **(SKYACTIV-G 1.3, SKYACTIV-G 1.5)**
  After pressing the push button start and before the engine starts, the operation sound of the fuel pump motor from near the fuel tank can be heard, however, this does not indicate a malfunction.

NOTE

- **(SKYACTIV-D 1.5)**
  - When starting the engine, do not release the brake pedal until the glow indicator light in the instrument cluster turns off and the engine starts, after pressing the push button start.
  - If the brake pedal is released before the engine starts, depress the brake pedal again and press the push button start to start the engine.
  - If the ignition is left switched ON for a long period of time without the engine running after the glow plugs are warmed up, the glow plugs may warm up again which will illuminate the glow indicator light.
  - The starter does not rotate until the glow indicator light turns off.

8. After starting the engine, let it idle for about ten seconds (Prohibited in Germany).

NOTE

- **(Germany)**
  Drive immediately after starting the engine. However do not use high engine speeds until reaching the operating temperature.
- **(SKYACTIV-G 1.3, SKYACTIV-G 1.5)**
  - Whether the engine is cold or warm, it should be started without the use of the accelerator.
  - If the engine does not start the first time, refer to Starting a Flooded Engine under Emergency Starting. If the engine still does not start, have your vehicle inspected by an Authorised Mazda Repairer (page 7-27).
- **(SKYACTIV-D 1.5)**
  If the ambient temperature is lower than about - 10 °C (14 °F), the maximum engine speed may not be attained for about three minutes after the engine starts to protect the engine.
- **(Manual transaxle vehicle with i-stop function)**
  If the engine has stopped due to stalling, it can be restarted by depressing the clutch pedal within 3 seconds of the engine stopping.
  The engine cannot be restarted even if the clutch pedal is depressed under the following conditions:
  - The driver's door is open.
  - The driver's seat belt is unfastened.
  - The clutch pedal is not released completely after the engine stalled.
  - The clutch pedal is depressed with the engine not stopped completely.

▼Engine Start Function When Key Battery is Dead

⚠ CAUTION

When starting the engine by holding the transmitter over the push button start due to a dead key battery or a malfunctioning key, be careful not to allow the following, otherwise the signal from the key will not be received correctly and the engine may not start.

- Metal parts of other keys or metal objects touch the key.

- Spare keys or keys for other vehicles equipped with an immobilizer system touch or come near the key.

- Devices for electronic purchases, or security passage touch or come near the key.

Start/Stop Engine

If the engine cannot be started due to a dead key battery, the engine can be started using the following procedure:

1. Continue to depress the brake pedal firmly until the engine has completely started.
2. **(Manual transaxle)**
   Continue to depress the clutch pedal firmly until the engine has completely started.
3. Verify that the push button start indication light (green) flashes.

NOTE

The push button start indicator light (green) will flash even if the push button start is pressed before depressing the brake pedal (automatic transaxle) or the clutch pedal (manual transaxle). If the clutch pedal is depressed (manual transaxle) or the brake pedal is depressed (automatic transaxle) under this condition, the engine can be started by resuming the procedure following this.

4. Touch the push button start using the backside of the key (as shown) while the push button start indicator light (green) flashes.

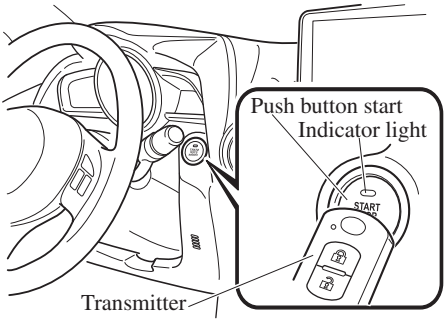

NOTE

When touching the push button start using the backside of the key as shown in the illustration, touch the push button start with the lock switch side of the key facing up.

5. Verify that the push button start indicator light (green) turns on.
6. Press the push button start to start the engine.

NOTE

- The engine cannot be started unless the clutch pedal is fully depressed (manual transaxle) or the brake pedal is fully depressed (automatic transaxle).
- If there is a malfunction with the push button start function, the push button start indicator light (amber) flashes. In this case, the engine may start, however, have the vehicle checked at an expert repairer, we recommend an Authorised Mazda Repairer as soon as possible.
- If the push button start indicator light (green) does not illuminate, perform the operation from the beginning again. If it does not illuminate, have the vehicle checked at an expert repairer, we recommend an Authorised Mazda Repairer.

NOTE

- To switch the ignition position without starting the engine, perform the following operations after the push button start indicator light (green) turns on.
  1. Release the clutch pedal (manual transaxle) or brake pedal (automatic transaxle).
  2. Press the push button start to switch the ignition position. The ignition switches in the order of ACC, ON, and off each time the push button start is pressed. To switch the ignition position again, perform the operation from the beginning.

▼Emergency Operation for Starting the Engine

If the KEY warning light (red) illuminates, or the push button start indicator light (amber) flashes, this could indicate that the engine may not start using the usual starting method. Have your vehicle inspected at an expert repairer, we recommend an Authorised Mazda Repairer as soon as possible. If this occurs, the engine can be force-started. Press and hold the push button start until the engine starts. Other procedures necessary for starting the engine such as having the key in the cabin, and depressing the clutch pedal (manual transaxle) or the brake pedal (automatic transaxle) are required.

Turning the Engine Off

⚠ *WARNING*

Do not stop the engine while the vehicle is moving:
Stopping the engine while the vehicle is moving for any reason other than in an emergency is dangerous. Stopping the engine while the vehicle is moving will result in reduced braking ability due to the loss of power braking, which could cause an accident and serious injury.

1. Stop the vehicle completely.
2. **(Manual transaxle)**
   Shift into neutral and set the parking brake.
   (Automatic transaxle)
   Shift the selector lever to the P position and set the parking brake.
3. Press the push button start to turn off the engine. The ignition position is off.

⚠ CAUTION

When leaving the vehicle, make sure the push button start is off.

NOTE

- The cooling fan in the engine compartment could turn on for a few minutes after the ignition is switched from ON to OFF, whether or not the A/C is on or off, to cool the engine compartment quickly.
- When the push button start is pressed from ON to ACC or OFF, the KEY indicator light (green) may flash for approximately 30 seconds indicating that the remaining battery power of the key is low.
  Replace with a new battery before the key becomes unusable.
  Refer to Key Battery Replacement on page 6-41.
- **(Automatic transaxle)**
  If the engine is turned off while the selector lever is in a position other than P, the ignition switches to ACC.

▼Emergency Engine Stop

Continuously pressing the push button start or quickly pressing it any number of times while the engine is running or the vehicle is being driven will turn the engine off immediately. The ignition switches to ACC.

i-stop*

The i-stop function automatically stops the engine when the vehicle is stopped at a traffic light or stuck in traffic, and then restarts the engine automatically to resume driving. The system provides improved fuel economy, reduced exhaust gas emissions, and eliminates idling noise while the engine is stopped.

Engine idle stopping and restarting

NOTE

- The i-stop indicator light (green) turns on under the following conditions:
  - When engine idling is stopped.
  - **(Except European model)**
    Engine idling stop conditions are met while the vehicle is being driven.

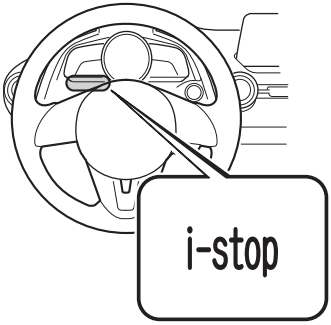

- The i-stop indicator light (green) turns off when the engine is restarted.

Manual transaxle

1. Stop the vehicle by depressing the brake pedal and then the clutch pedal.
2. While depressing the clutch pedal, shift the shift lever to the neutral position. Engine idling stops after the clutch pedal is released.
3. **(SKYACTIV-G 1.3, SKYACTIV-G 1.5)**
   The engine restarts automatically when you depress the clutch pedal or start to release it.

NOTE

The engine restart timing varies depending on the brake pedal depression force.

(SKYACTIV-D 1.5)
The engine restarts automatically when the clutch pedal is depressed.

*Some models.

Automatic transaxle

1. Engine idling stops when the brake pedal is depressed while the vehicle is driven (except for driving in the R or M position second gear fixed mode) and the vehicle is stopped.
2. The engine restarts automatically when the brake pedal is released with the selector lever in the D or M position (not in second gear fixed mode).
3. If the selector lever is in the N or P position, the engine does not restart when the brake pedal is released. The engine restarts when the brake pedal is depressed again or the selector lever is shifted to the D, M (not in second gear fixed mode) or the R position. (For the purposes of safety, always keep the brake pedal depressed when shifting the selector lever while engine idling is stopped.)

Operation conditions

When the system is operable

Under the following conditions, engine idling stops and the i-stop indicator light (green) turns on.

- **(SKYACTIV-G 1.3, SKYACTIV-G 1.5)**
  The engine is warmed up.
- **(SKYACTIV-D 1.5)**
  - The engine is not cold.
  - The fuel injection amount learning, which is performed periodically and automatically, is not being performed.
- The engine has been started and the vehicle is driven for a certain period.
- The engine is started with the bonnet closed.
- The battery is in good condition.
- All doors, liftgate/boot lid, and bonnet are closed.
- The driver's seat belt is fastened.
- The air conditioner is not operating with the airflow mode dial in the position.
- **(Automatic air-conditioning)**
  - The temperature setting dial for the air-conditioning is set to a position other than maximum cooling (A/C ON).
  - The vehicle's interior temperature and the set temperature for the air conditioner are nearly the same.
- The i-stop warning light (amber) is not turned on/flashing.
- The keyless entry & push button start system functions are normal.
- The brake vacuum is sufficiently high.
- The steering wheel is not being operated.

- **(Manual transaxle)**
  - The vehicle speed is 3 km/h (1.8 mph) or less.
  - The shift lever is in the neutral position.
  - The clutch pedal is not depressed.
- **(Automatic transaxle)**
  - The vehicle is stopped.
  - The selector lever is in the D or M position (not in second gear fixed mode).
  - The automatic transaxle fluid has warmed up sufficiently.
  - The automatic transaxle fluid temperature is not abnormally high.
  - The steering wheel is almost in the straight-ahead position (idling may not stop even with the steering wheel in the straight-ahead position if force is applied to the steering wheel. Release the force applied to the steering wheel to stop engine idling).
  - The vehicle is stopped by depressing the brake pedal.
  - Emergency braking is not applied.

When the system is not operable

Engine idling does not stop in the following conditions:

- The vehicle is stopped but the engine is kept idling.
- The air conditioner is operating with the airflow mode dial in the position.
- **(Automatic air-conditioning)**
  - The temperature setting dial for the air-conditioning is set to the maximum cooling (A/C ON) position.
  - There is a large difference between the cabin temperature and the set temperature of the air conditioner.
- The ambient temperature is extremely high or low.
- The atmospheric pressure is low (when driving at high altitudes).
- **(Automatic transaxle)**
  - The vehicle is stopped on a steep incline.
  - The steering wheel is not in the straight-ahead position while the vehicle is stopped.
- **(SKYACTIV-D 1.5)**
  The particulate matter (PM) is being removed by the diesel particulate filter (DPF).

NOTE

Under the following conditions, a period of time is required to stop engine idling

- The battery power is depleted for some reasons such as the vehicle has not been driven for a long period.
- The ambient temperature is high or low.
- After the battery terminals are disconnected for some reasons such as for battery replacement.
- **(SKYACTIV-D 1.5)**
  After PM removal is performed by the diesel particulate filter (DPF).

Engine does not restart
If the following operations are performed while the idling is stopped, the engine will not restart for safety reasons. In such cases, start the engine using the normal method.

- The bonnet is opened.
- **(European model)**
  The driver's seat belt is unfastened and the driver's door is opened.
- **(Except European model)**
  - **(Manual transaxle)**
    With the shift lever in a position other than neutral, the driver's seat belt is unfastened and the driver's door is opened.
  - **(Automatic transaxle)**
    With the selector lever in the D or M (not in second gear fixed mode), the driver's seat belt is unfastened and the driver's door is opened.

Engine-stop period is short or time until next engine idle stop is long

- The ambient temperature is high or low.
- The battery power is depleted.
- Power consumption by the vehicle's electrical parts is high.

NOTE

Engine restarts automatically while engine idling is stopped
Under the following conditions, the engine restarts automatically.

- The i-stop OFF switch is pressed until the beep sounds.
- The air conditioner is operated with the airflow mode dial in the position.
- **(Automatic air-conditioning)**
  - The temperature setting dial of the air conditioner is set to maximum cooling (A/C ON).
  - The cabin temperature is largely different from the set temperature of the air conditioner.
- The brakes are released slightly on a slope and the vehicle begins to move.
- Two minutes have elapsed since the idling was stopped.
- The battery power is depleted.
- **(Automatic transaxle)**
  - The accelerator pedal is depressed with the selector lever in the D or M (not in second gear fixed mode) position.
  - The selector lever is shifted to the R position.
  - The selector lever is shifted from N or P position to D or M (not in second gear fixed mode) position.
  - The steering wheel is operated with the selector lever in the D or M (not in second gear fixed mode) position.
  - The selector lever is in the M position and the second gear fixed mode is selected.
- **(Except European model)**
  - **(Manual transaxle)**
    With the shift lever in the neutral position, the driver's seat belt is unfastened and the driver's door is opened.
  - **(Automatic transaxle)**
    With the selector lever in the N or P position, the driver's seat belt is unfastened and the driver's door is opened.

NOTE

Selector lever is operated while engine idling is stopped (automatic transaxle)
If the selector lever is shifted from D or M (not in second gear fixed mode) position to N or P position while engine idling is stopped, the engine does not restart even when the brake pedal is released. The engine will restart if the brake pedal is depressed again or the selector lever is shifted to the D, M (not in second gear fixed mode), or R position. (For the purposes of safety, always keep the brake pedal depressed when shifting the selector lever while engine idling is stopped.)

- **(European model)**
  If the selector lever is shifted from the D or M (not in second gear fixed mode) position to the N or P position, and the driver's seat belt is unfastened and the driver's door is opened, the engine does not restart. Start the engine using the normal method.
- **(Except European model)**
  If the selector lever is shifted from the D or M (not in second gear fixed mode) to the N or P position, and the driver's seat belt is unfastened and the driver's door is opened, the engine restarts.

Battery terminals are disconnected
Engine idling may not stop right after the battery terminals are disconnected. In addition, if the battery is replaced, the i-stop functions must be verified. Consult an expert repairer, we recommend an Authorised Mazda Repairer.

▼i-stop Warning Light (Amber)/i-stop Indicator Light (Green)

To ensure safe and comfortable use of the vehicle, the i-stop system constantly monitors the driver's operations, the vehicle's interior and exterior environment, and the operational status of the vehicle, and uses the i-stop warning light (amber) and i-stop indicator light (green) to inform the driver of various cautions and warnings.

NOTE

On vehicles equipped with the centre display, the i-stop operation status is displayed in the fuel monitor control status display.
Refer to Control Status Display on page 4-93.

i-stop warning light (amber)

When the light is turned on

- The light turns on when the ignition is switched ON and turns off when the engine is started.
- The light turns on when the i-stop OFF switch is pressed and the system is turned off.
- The light turns on if the following operations are performed while engine idling is stopped. In such cases, the engine does not restart automatically to ensure safety. Start the engine using the normal method.
  - The bonnet is opened.
  - **(European model)**
    The driver's seat belt is unfastened and the driver's door is opened.
  - **(Except European model)**
    - **(Manual transaxle)**
      With the shift lever in a position other than neutral, the driver's seat belt is unfastened and the driver's door is opened.
    - **(Automatic transaxle)**
      With the selector lever in the D or M (not in second gear fixed mode) position, the driver's seat belt is unfastened and the driver's door is opened.

NOTE
A problem in the system may be indicated under the following conditions. Have your vehicle inspected at an expert repairer, we recommend an Authorised Mazda Repairer. • The light does not turn on when the ignition is switched ON. • The light continues to remain on even though the i-stop OFF switch has been pressed while the engine is running.

When the light is flashing

The light continues to flash if the system has a malfunction. Have your vehicle inspected at an expert repairer, we recommend an Authorised Mazda Repairer.

i-stop indicator light (green)

When the light is turned on

- The light turns on while engine idling is stopped and turns off when the engine is restarted.
- **(Except European model)**
  The light turns on when the engine idling stop conditions are met while the vehicle is driven.

When the light is flashing

- **(Manual transaxle)**
  The light flashes when the shift lever is shifted to a position other than the neutral while engine idling is stopped to notify the driver that engine idling is stopped.
  (SKYACTIV-G 1.3, SKYACTIV-G 1.5)
  By depressing the clutch pedal or starting to release it, the engine restarts automatically and the light turns off.
  (SKYACTIV-D 1.5)
  By depressing the clutch pedal, the engine restarts automatically and the light turns off.
- **(European model)**
  The light flashes when the driver's door is opened while engine idling is stopped to notify the driver that engine idling is stopped. It turns off when the driver's door is closed.
- **(Except European model)**
  - **(Automatic transaxle)**
    The light flashes if the vehicle is stopped but the brake pedal is not depressed with sufficient force. Depress the brake pedal a little more strongly because the pedal force may be insufficient.

▼i-stop OFF Switch

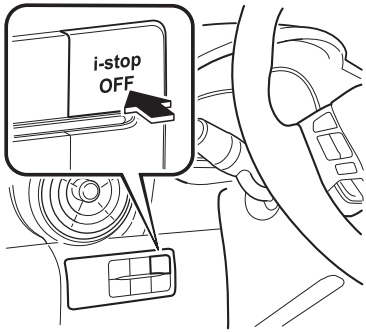

By pressing the switch until a beep sounds, the i-stop function is turned off and the i-stop warning light (amber) in the instrument cluster turns on. By pressing the switch again until the beep sounds, the i-stop function becomes operational and the i-stop warning light (amber) turns off.

NOTE
If the engine is stopped with the i-stop function cancelled, the i-stop function becomes operational when the engine is started the next time.

▼Vehicle Roll Prevention Function (Automatic transaxle)

Vehicles with the i-stop function are equipped with a vehicle roll prevention function. This function prevents the vehicle from rolling, such as when releasing the brake pedal while on a slope under the following conditions:

- While engine idling is stopped (prevents the vehicle from rolling back)
- When the engine restarts after releasing the brake pedal (prevents the vehicle's sudden movement due to vehicle creep), sudden movement of the vehicle is prevented by controlling the brakes or the automatic transaxle.

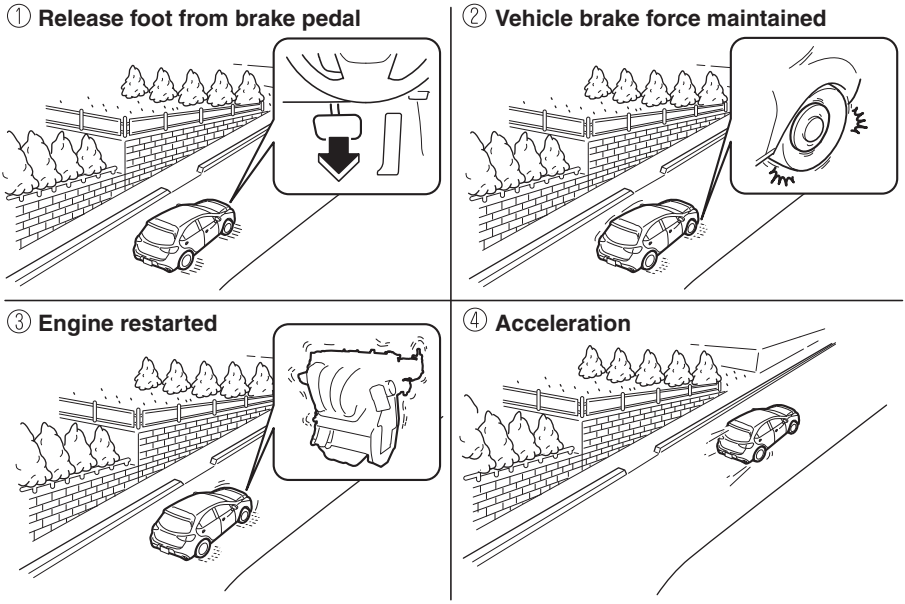

⚠ *WARNING*

Do not rely completely on the vehicle roll prevention function.
The vehicle roll prevention function is a supplementary function which operates for a maximum of four seconds after releasing the brake pedal and accelerating the vehicle from an engine idling stop condition. Over reliance on the system may result in an unexpected accident if the vehicle were to suddenly accelerate. Before starting to drive the vehicle, always confirm the safety of the surroundings and operate the selector lever, brake pedal, and accelerator pedal appropriately. Note that the vehicle may move suddenly depending on the vehicle's load or if it is towing something.
Note that the vehicle may move suddenly after the vehicle roll prevention function is released while the vehicle is under the following conditions:
The selector lever is in the N position.
If the selector lever is shifted to the N position and the brake pedal is released while the i-stop function is operating, the brake force is gradually released. To accelerate the vehicle, release the brake pedal after the engine restarts and shift the selector lever to a position other than the N position.

NOTE

- When the vehicle is stopped on a steep grade, the vehicle roll prevention function does not operate because engine idling is not stopped.
- The brake pedal response may change, sound may occur from the brakes, or the brake pedal could vibrate from the operation of the vehicle roll prevention function. However, this does not indicate a malfunction.

Meters and Gauges

Instrument Cluster
Digital Speedometer Type

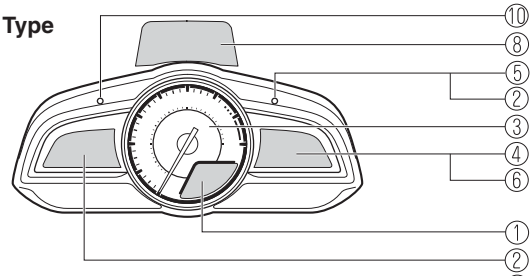

Analog Speedometer Type
Type A

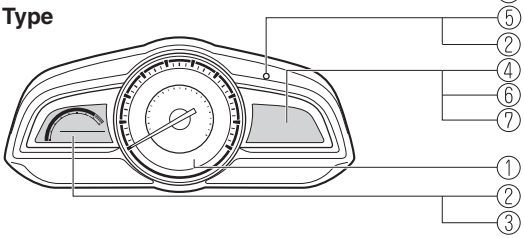

Type B

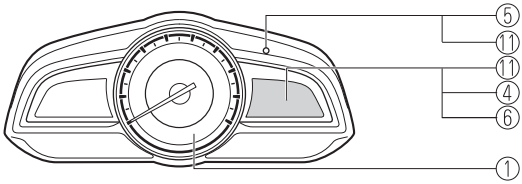

Type C

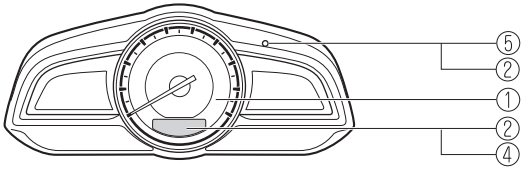

Steering Switch*

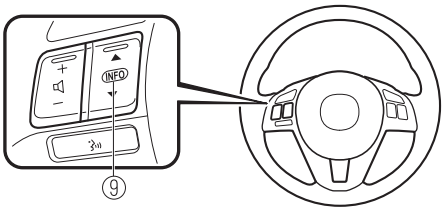

*Some models.

① Speedometer ..... page 4-25
② Odometer, Trip Meter and Trip Meter Selector ..... page 4-26

③ Tachometer ..... page 4-30
④ Fuel Gauge ..... page 4-31
⑤ Instrument Panel Illumination ..... page 4-32
⑥ Outside Temperature Display ..... page 4-33
⑦ Cruise Control Set Vehicle Speed Display ..... page 4-33
⑧ Active Driving Display ..... page 4-36
⑨ Trip Computer and INFO Switch ..... page 4-33
⑩ Speed Unit Selector ..... page 4-25
⑪ Odometer, Trip Meter, Trip Computer and Trip Meter Selector ..... page 4-28

▼Speedometer

The speedometer indicates the speed of the vehicle.

NOTE
(Analog speedometer type) If a few seconds have elapsed after switching the ignition off, the needle may deviate. However, this does not indicate a problem.

▼Speed Unit Selector (Digital Speedometer Type)*

In some countries, you may have to change the speed units between km/h and mph.
Press the speed unit selector for 1.5 seconds or more.
The speed units for the speedometer will change between km/h and mph.

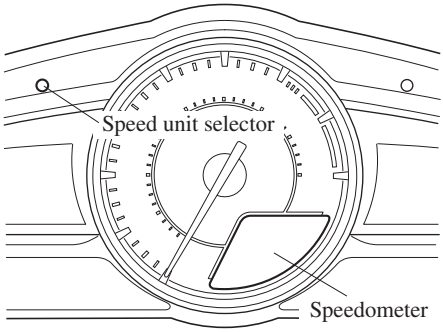

*Some models.

▼Odometer, Trip Meter and Trip Meter Selector

The display mode can be changed from odometer to trip meter A to trip meter B and then back to odometer by pressing the selector while one of them is displayed. The selected mode will be displayed.

Digital Speedometer Type/Analog Speedometer Type (Type A) instrument cluster

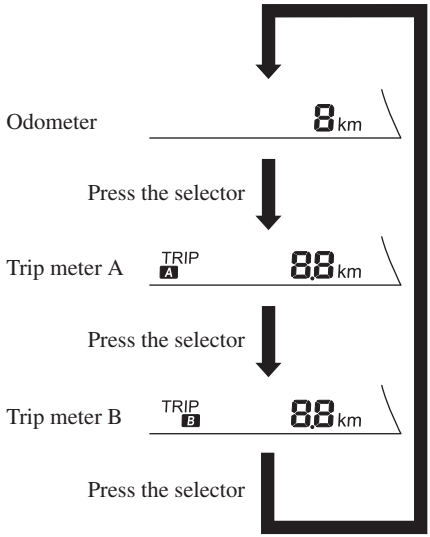

Analog Speedometer Type (Type C) instrument cluster

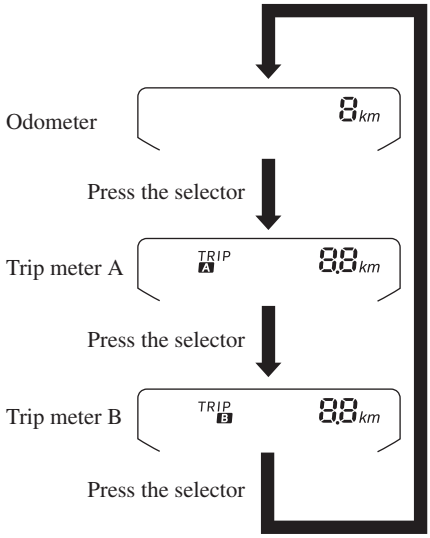

NOTE

When the ignition is switched to ACC or off, the odometer or trip meters cannot be displayed, however, pressing the selector can inadvertently switch the trip meters or reset them during an approximate ten-minute period in the following cases:

- After the ignition is switched to off from ON.
- After the driver's door is opened.

Odometer

The odometer records the total distance the vehicle has been driven.

Trip meter

The trip meter can record the total distance of two trips. One is recorded in trip meter A, and the other is recorded in trip meter B.

For instance, trip meter A can record the distance from the point of origin, and trip meter B can record the distance from where the fuel tank is filled.

When trip meter A is selected, pressing the selector again within one second will change to trip meter B mode.

When trip meter A is selected, TRIP A will be displayed. When trip meter B is selected, TRIP B will be displayed.

The trip meter records the total distance the vehicle is driven until the meter is again reset. Return it to “0.0” by depressing and holding the selector for one second or more. Use this meter to measure trip distances and to compute fuel consumption.

NOTE

- **(Vehicles with type C/type D audio)**
  If the fuel economy data is reset using the fuel economy monitor, or trip A is reset using the trip meter when the function which synchronizes the fuel economy monitor and the trip meter is on, the fuel economy data and trip A are reset simultaneously.
  Refer to Fuel Economy Monitor on page 4-91.
- Only the trip meters record tenths of kilometres (miles).
- The trip record will be erased when:
  - The power supply is interrupted (blown fuse or the battery is disconnected).
  - The vehicle is driven over 9999.9 km (mile).

▼Odometer, Trip Meter, Trip Computer and Trip Meter Selector

The display mode can be changed between trip meter A and trip meter B by pressing the selector while one of them is displayed. The selected mode will be displayed.

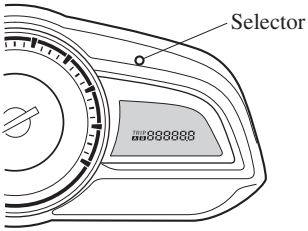

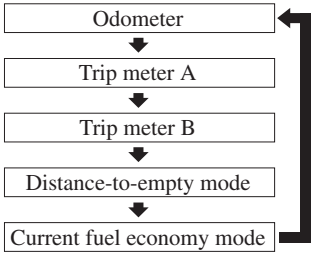

NOTE

When the ignition is switched to ACC or off, the odometer or trip meters cannot be displayed, however, pressing the selector can inadvertently switch the trip meters or reset them during an approximate ten-minute period in the following cases:

- After the ignition is switched to off from ON.
- After the driver's door is opened.

Odometer

The odometer records the total distance the vehicle has been driven.

Trip meter

The trip meter can record the total distance of two trips. One is recorded in trip meter A, and the other is recorded in trip meter B.
For instance, trip meter A can record the distance from the point of origin, and trip meter B can record the distance from where the fuel tank is filled.
When trip meter A is selected, pressing the selector again within one second will change to trip meter B mode.
When trip meter A is selected, TRIP A will be displayed. When trip meter B is selected, TRIP B will be displayed.
The trip meter records the total distance the vehicle is driven until the meter is again reset. Return it to “0.0” by holding the selector depressed for 1 second or more. Use this meter to measure trip distances and to compute fuel consumption.

NOTE

- **(Vehicles with type C/type D audio)** If the fuel economy data is reset using the fuel economy monitor, or trip A is reset using the trip meter when the function which synchronizes the fuel economy monitor and the trip meter is on, the fuel economy data and trip A are reset simultaneously.
  Refer to Fuel Economy Monitor on page 4-91.
- Only the trip meters record tenths of kilometres (miles).
- The trip record will be erased when:
  - The power supply is interrupted (blown fuse or the battery is disconnected).
  - The vehicle is driven over 9999.9 km (mile).

Trip Computer

The following information can be selected by pressing the selector with the ignition switched ON.

- Approximate distance you can travel on the available fuel
- Current fuel economy

If you have any problems with your trip computer, consult an expert repairer, we recommend an Authorised Mazda Repairer.

Distance-to-empty mode

This mode displays the approximate distance you can travel on the remaining fuel based on the fuel economy.
The distance-to-empty will be calculated and displayed every second.

NOTE

- Even though the distance-to-empty display may indicate a sufficient amount of remaining driving distance before refuelling is required, refuel as soon as possible if the fuel level is very low or the low fuel warning light illuminates.
- The display may not change unless you add more than approximately 9 L (2.3 US gal, 1.9 Imp gal) of fuel.
- The distance-to-empty is the approximate remaining distance the vehicle can be driven until all the graduation marks in the fuel gauge indicating the remaining fuel supply disappear.
- If there is no past fuel economy information such as after first purchasing your vehicle or the information is deleted when the battery leads are disconnected, the actual distance-to empty/range may differ from the amount indicated.

Current fuel economy mode

This mode displays the current fuel economy by calculating the amount of fuel consumption and the distance travelled. Current fuel economy will be calculated and displayed every 2 seconds.

When you've slowed to about 5 km/h (3 mph), - - - L/100 km (- - - mpg) will be displayed.

▼Tachometer*

The tachometer shows engine speed in thousands of revolutions per minute (rpm).

⚠ CAUTION

Do not run the engine with the tachometer needle in the RED ZONE. This may cause severe engine damage.

Type A

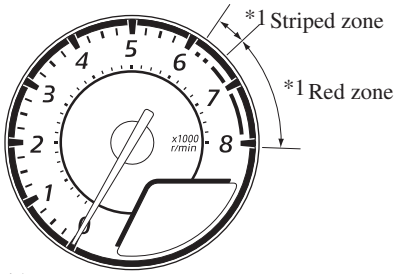

*1 The range varies depending on the type of gauge.

Type B

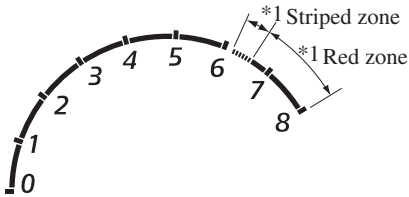

*1 The range varies depending on the type of gauge.

 *Some models.

NOTE

When the tachometer needle enters the STRIPED ZONE, this indicates to the driver that the gears should be shifted before entering the RED ZONE.

▼Fuel Gauge

The fuel gauge shows approximately how much fuel is remaining in the tank when the ignition is switched ON. We recommend keeping the tank over 1/4 full.

Digital Speedometer type/Type A instrument cluster/Type B instrument cluster

Full

1/4 Full

Type C instrument cluster

Full

1/4 Full

If the low fuel warning light illuminates or the fuel level is very low, refuel as soon as possible.
Refer to Warning/Indicator Lights on page 4-38.

NOTE

- After refuelling, it may require some time for the indicator to stabilize. In addition, the indicator may deviate while driving on a slope or curve since the fuel moves in the tank.
- The display indicating a quarter or less remaining fuel has more segments to show the remaining fuel level in greater detail.
- The direction of the arrow (◂⛽) indicates that the fuel-filler flap is on the left side of the vehicle.

(SKYACTIV-D 1.5)
If inconsistency in engine performance or stalling occurs due to low fuel level conditions, refuel the vehicle as soon as possible and add at least 10 L (2.7 US gal, 2.2 Imp gal) of fuel.

▼Instrument Panel Illumination

When the position lights are turned on with the ignition switched ON, the brightness of the instrument panel illumination is dimmed.

NOTE
When the position lights are turned on, the position lights indicator light in the instrument cluster turns on. Refer to Headlights on page 4-60.

The brightness of the instrument panel and instrument panel illuminations can be adjusted by rotating the knob.

- The brightness decreases by rotating the knob to the left. A beep sound will be heard when the knob has been rotated to the maximum dim position.
- The brightness increases by rotating the knob to the right.

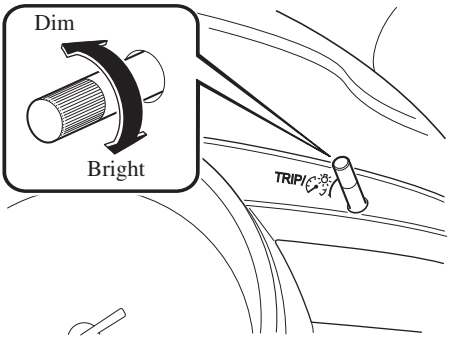

Function for cancelling illumination dimmer

The illumination dimmer can be cancelled by rotating the instrument panel illumination knob to the right until a beep sound is heard while the instrument cluster is dimmed with the ignition switched ON. If the instrument cluster's visibility is reduced due to glare from surrounding brightness, cancel the illumination dimmer.

NOTE
• When the illumination dimmer is cancelled, the instrument cluster cannot be dimmed even if the position lights are turned on. • When the illumination dimmer is cancelled, the screen in the centre display switches to constant display of the daytime screen.

▼Outside Temperature Display*

When the ignition is switched ON, the outside temperature is displayed.

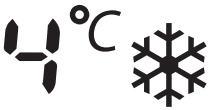

NOTE

Under the following conditions, the outside temperature display may differ from the actual outside temperature depending on the surroundings and vehicle conditions:

- Significantly cold or hot temperatures.
- Sudden changes in outside temperature.
- The vehicle is parked.
- The vehicle is driven at low speeds.

▼Cruise Control Set Vehicle Speed Display*

The vehicle speed preset using the cruise control is displayed.

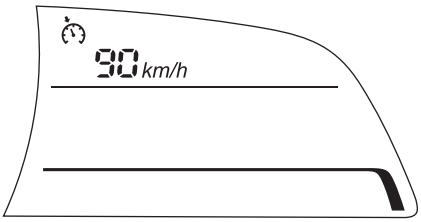

▼Trip Computer and INFO Switch

The following information can be selected

by pressing the up ▲ or down ▼ part of the INFO switch with the ignition switched ON.

- Approximate distance you can travel on the available fuel
- Average fuel economy
- Current fuel economy
- Average vehicle speed
- Vehicle speed alarm*

If you have any problems with your trip computer, consult an expert repairer, we recommend an Authorised Mazda Repairer.

Distance-to-empty mode

This mode displays the approximate distance you can travel on the remaining fuel based on the fuel economy.

The distance-to-empty will be calculated and displayed every second.

(European model)

(Except European model)

*Some models.

NOTE

- Even though the distance-to-empty display may indicate a sufficient amount of remaining driving distance before refuelling is required, refuel as soon as possible if the fuel level is very low or the low fuel warning light illuminates.
- The display may not change unless you add more than approximately 9 L (2.3 US gal, 1.9 Imp gal) of fuel.
- The distance-to-empty is the approximate remaining distance the vehicle can be driven until all the graduation marks in the fuel gauge (indicating the remaining fuel supply) disappear.
- If there is no past fuel economy information such as after first purchasing your vehicle or the information is deleted when the battery leads are disconnected, the actual distance-to empty/range may differ from the amount indicated.

Average fuel economy mode

This mode displays the average fuel economy by calculating the total fuel consumption and the total travelled distance since purchasing the vehicle, re-connecting the battery after disconnection, or resetting the data. The average fuel economy is calculated and displayed every minute.

(European model)

(Except European model)

To clear the data being displayed, press the INFO button for more than 1.5 seconds. After pressing the INFO button, - - - L/100 km (- - - mpg) will be displayed for about 1 minute before the fuel economy is recalculated and displayed.

Current fuel economy mode

This mode displays the current fuel economy by calculating the amount of fuel consumption and the distance travelled.

Current fuel economy will be calculated and displayed every 2 seconds.

(European model)

(Except European model)

When you've slowed to about 5 km/h (3 mph), - - - L/100 km (- - - mpg) will be displayed.

Average vehicle speed mode

This mode displays the average vehicle speed by calculating the distance and the time travelled since connecting the battery or resetting the data.
Average vehicle speed will be calculated and displayed every 10 seconds.

(European model)

(Except European model)

To clear the data being displayed, press the INFO button for more than 1.5 seconds. After pressing the INFO button, - - - km/h (- - - mph) will be displayed for about 1 minute before the vehicle speed is recalculated and displayed.

Vehicle speed alarm mode*

In this mode, the current setting for the vehicle speed alarm is displayed. You can change the vehicle speed setting at which the warning is triggered.

NOTE
The vehicle speed alarm display is activated at the same time the beep sound is heard. The set vehicle speed flashes several times.

The vehicle speed alarm can be set using the INFO switch.

NOTE
• Always set the vehicle speed according to the laws and regulations of the country/city in which the vehicle is driven. In addition, always verify the speed of the vehicle using the speedometer. • The vehicle speed alarm function can be set between 30 and 250 km/h (20 and 150 mph).

The vehicle speed alarm can be set using the following procedure.

1. Press the INFO switch on the speed alarm screen.
2. Press the INFO button until the beep sounds.
3. Press the up ▲ or down ▼ part of the INFO switch to select the desired vehicle speed.
4. Press the INFO button until the beep sounds.

*Some models.

Active Driving Display*

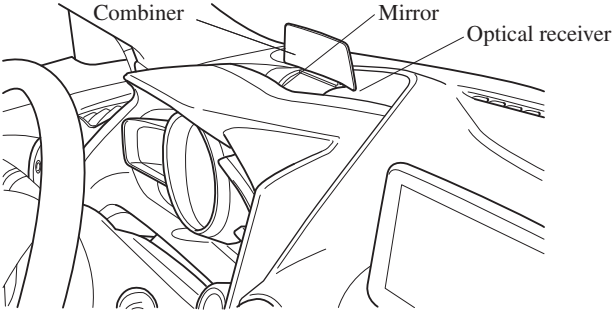

⚠ *WARNING*

Always adjust the display brightness and position with the vehicle stopped:
Adjusting the display brightness and position while driving the vehicle is dangerous as doing so could distract your attention from the road ahead and lead to an accident.

⚠ CAUTION

- Do not try to adjust the angle or open/close the active driving display manually. Fingerprints on the display will make it difficult to view and using excessive force when operating it could cause damage.
- Do not place objects in the vicinity of the active driving display. The active driving display may not operate or any interference with its operation could cause damage.
- Do not place beverages near the active driving display. If water or other liquids are splashed on the active driving display, it could cause damage.
- Do not place objects above the active driving display screen or apply stickers to the combiner as they will cause interference.
- A sensor is integrated to control the display's luminosity. If the optical receiver is covered, the display's luminosity will lower making the display difficult to view.
- Do not allow intense light to hit the optical receiver. Otherwise, it could cause damage.

*Some models.

NOTE

- It may be difficult to view the display when wearing sunglasses. Take off your sunglasses or adjust the luminosity.
- If the battery has been removed and re-installed or the battery voltage is low, the adjusted position may deviate.
- The display may be difficult to view or temporarily affected by weather conditions such as rain, snow, light, and temperature.
- If the audio system is removed, the active driving display cannot be operated.

The active driving display indicates the following information:

- Lane Departure Warning System (LDWS) Operation Conditions and Warnings
  Refer to Lane Departure Warning System (LDWS) on page 4-105.
- Smart City Brake Support (SCBS) Operation Conditions
  Refer to Smart City Brake Support (SCBS) on page 4-126.
- Adjustable Speed Limiter Operation Conditions and Warnings
  Refer to Adjustable Speed Limiter on page 4-121.
- Vehicle Speed Setting Using Cruise Control
  Refer to Cruise Control on page 4-138.
- Turn-by-Turn (TBT) (Direction and Distance) and Lane Guidance
- Vehicle Speed

Each setting/adjustment for the active driving display can be performed on the centre display (Type C/Type D audio).

1. Select the ⚙ icon on the home screen and display the Settings screen.
2. Select the AD-Disp tab.
3. Select the desired item and perform the setting/adjustment.

- **Height :** Active driving display position
- **Brightness Control :** Method for adjusting screen brightness (Automatically/Manually)
- **Calibration :** Brightness initialization setting (when selecting automatic adjustment)
- **Brightness :** Brightness adjustment (when selecting manual adjustment)
- **Navigation :** On/Off
- **Active Driving Display :** On/Off
- **Reset**

Warning/Indicator Lights

Instrument Cluster varies depending on model and specifications.

Instrument Cluster

Digital Speedometer Type

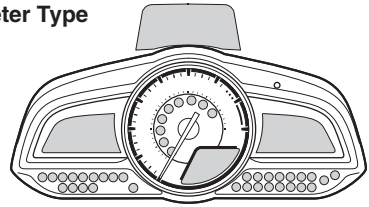

Analog Speedometer Type

Type A

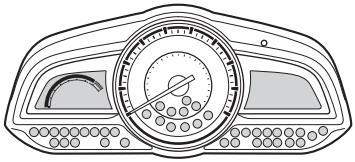

Type B

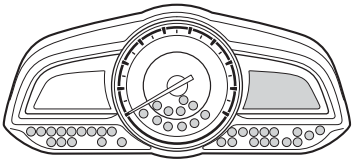

Type C

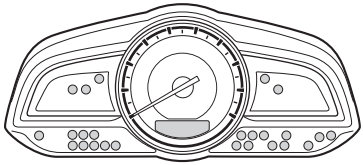

Centre of Instrument panel

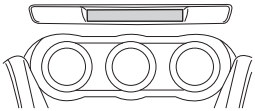

Warning/Indicator lights will appear in any of the highlighted areas

▼Warning Lights

These lights turn on or flash to notify the user of the system operation status or a system malfunction.

Signal	Warning Lights	Page
	Master Warning Light*1	7-35
	Brake System Warning Light*1*2	7-35
ABS	ABS Warning Light*1	7-35
	Charging System Warning Light*1	7-35
	Engine Oil Warning Light*1	7-35
	Check Engine Light*1	7-35
(Red)	High Engine Coolant Temperature Warning Light*1	7-35
i-stop (Amber)	*i-stop Warning Light*1	4-18
i-ELOOP (Amber)	*i-ELOOP Warning Light	7-35
AT	*Automatic Transaxle Warning Light*1	7-35
	Power Steering Malfunction Indicator Light*1	7-35
	Air Bag/Seat Belt Pretensioner System Warning Light*1	7-35
	Low Fuel Warning Light	7-35

*Some models.

Instrument Cluster and Display

Signal	Warning Lights	Page
PASS	Seat Belt Warning Light (Front seat)	7-35
REAR (Red)	*Seat Belt Warning Light (Rear seat)	7-35
	Door-Ajar Warning Light	7-35
120 km/h	*120 km/h Warning Light*1	7-35
	*Low Washer Fluid Level Warning Light	7-35
	*Tyre Pressure Monitoring System Warning Light*1	7-35
(Red)	KEY Warning Light*1	7-35
(Amber)	*Smart City Brake Support (SCBS) Warning Light	7-35
	*Lane Departure Warning System (LDWS) Warning Light*1	Illuminated 7-35 Flashing 4-110
(Amber)	*High Beam Control System (HBC) Warning Light*1	7-35
	*LED Headlight Warning Light	7-35

*1 The light turns on when the ignition is switched on for an operation check, and turns off a few seconds later or when the engine is started. If the light does not turn on or remains turned on, have the vehicle inspected at an expert repairer, we recommend an Authorised Mazda Repairer.
*2 The light turns on continuously when the parking brake is applied.

 *Some models.

▼Indicator Lights

These lights turn on or flash to notify the user of the system operation status or a system malfunction.

Signal	Indicator Lights	Page
OFF	*Blind Spot Monitoring (BSM) OFF Indicator Light*1	4-116
OFF	*Lane Departure Warning System (LDWS) OFF Indicator Light*1	4-108
(Green)	KEY Indicator Light	3-8
REAR (Green)	*Seat Belt Indicator Light (Rear seat)	2-18
(Green)	*High Beam Control System (HBC) Indicator Light	4-104
	*Glow Indicator Light*1	4-44
DPF	*Diesel Particulate Filter Indicator Light*1	4-147
	*Wrench Indicator Light*1	4-43
	*TCS/DSC Indicator Light*1	4-85, 4-86
OFF	*DSC OFF Indicator Light*1	4-87
(Red)	*Smart City Brake Support (SCBS) Indicator Light*1	4-130
OFF	*Smart City Brake Support (SCBS) OFF Indicator Light*1	4-130

Instrument Cluster and Display

Signal	Indicator Lights	Page
i-stop (Green)	*i-stop Indicator Light	4-18
i-ELOOP (Green)	*i-ELOOP Indicator Light	4-90
(Blue)	Low Engine Coolant Temperature Indicator Light	4-44
	*Shift Position Indication	4-49
	Headlight High-Beam Indicator Light	4-65, 4-65
	Direction Indicator/Hazard Warning Indicator Lights	4-70, 4-77
	Security Indicator Light*1	3-42
(Amber)	*Cruise Main Indicator Light	4-139
(Green)	*Cruise Set Indicator Light	4-139
LIM (Amber)	*Adjustable Speed Limiter Main Indicator Light	4-123
LIM (Green)	*Adjustable Speed Limiter Set Indicator Light	4-123
SPORT	*Select Mode Indicator Light	4-98
	Lights-On Indicator Light	4-60
	*Front Fog Light Indicator Light	4-67

*Some models.

Signal	Indicator Lights	Page
	*Rear Fog Light Indicator Light	4-68

*1 The light turns on when the ignition is switched on for an operation check, and turns off a few seconds later or when the engine is started. If the light does not turn on or remains turned on, have the vehicle inspected at an expert repairer, we recommend an Authorised Mazda Repairer.

▼Wrench Indicator Light

When the ignition is switched ON, the wrench indicator light is illuminated and then turns off after a few seconds.

The wrench indicator light is illuminated when the preset maintenance period arrives. Verify the content and perform maintenance.
Refer to Maintenance Monitor on page 6-15.

SKYACTIV-D 1.5

The wrench indicator light turns on when the engine oil has deteriorated, is insufficient*, is around the X mark on the oil level gauge or reaches a position exceeding the X mark.
Check the engine oil. Refer to Inspecting Engine Oil Level on page 6-28.
Replace the engine oil if the wrench indicator light does not turn off even though the engine oil level is in the normal range.

NOTE

- Depending on the vehicle use conditions, the wrench indicator light may turn on for reasons other than the preset maintenance period.
- Whenever the engine oil is replaced, a reset of the vehicle engine control unit necessary.
  Your Authorised Mazda Repairer will be able to reset the engine control unit or see page 6-27 for the Vehicle engine control unit reset procedure.

▼Low Engine Coolant Temperature Indicator Light (Blue)

The light illuminates continuously when the engine coolant temperature is low and turns off after the engine is warm.
If the low engine coolant temperature indicator light remains illuminated after the engine has been sufficiently warmed up, the temperature sensor could have a malfunction. Consult an expert repairer, we recommend an Authorised Mazda Repairer.

▼Glow Indicator Light (SKYACTIV-D 1.5)

This light may illuminate when the ignition is switched ON.
It turns off when the glow plugs are warm.
If the ignition is left switched ON for a long period of time without the engine running after the glow plugs are warmed up, the glow plugs may warm up again which will illuminate the glow indicator light.

Manual Transaxle Operation

▼Manual Transaxle Shift Pattern

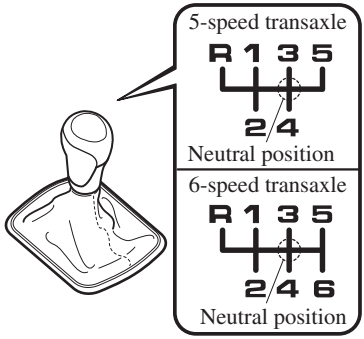

The vehicle is equipped with either a 5-speed or 6-speed manual transaxle. The shift pattern for each is shown above.

Depress the clutch pedal all the way down while shifting; then release it slowly.

Your vehicle is equipped with a device to prevent shifting to R (reverse) by mistake. Push the shift lever downward and shift to R.

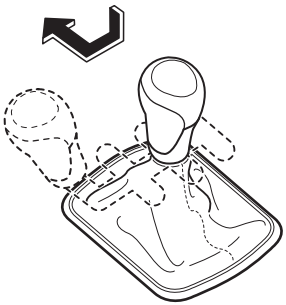

⚠ *WARNING*

Do not use sudden engine braking on slippery road surfaces or at high speeds:
Shifting down while driving on wet, snowy, or frozen roads, or while driving at high speeds causes sudden engine braking, which is dangerous. The sudden change in tyre speed could cause the tyres to skid. This could lead to loss of vehicle control and an accident.

Be sure to leave the shift lever in 1 or R position and set the parking brake when leaving the vehicle unattended:
Otherwise the vehicle could move and cause an accident.

⚠ CAUTION

- Keep your foot off the clutch pedal except when shifting gears. Also, do not use the clutch to hold the vehicle on an upgrade. Riding the clutch will cause needless clutch wear and damage.
- Do not apply any excessive lateral force to the shift lever when changing from 5th to 4th gear. This could lead to the accidental selection of 2nd gear, which can result in damage to the transaxle.
- Make sure the vehicle comes to a complete stop before shifting to R. Shifting to R while the vehicle is still moving may damage the transaxle.

NOTE

- For vehicles with type C instrument cluster[*1]
  If the engine speed is about to exceed the permissible engine speed, the buzzer sounds.
  Refer to Over Rev. Buzzer on page 7-52.
  To determine which instrument cluster is equipped on your Mazda, Refer to Meters and Gauges on page 4-24.
- If shifting to R is difficult, shift back into neutral, release the clutch pedal, and try again.
- (With i-stop function)
  If the engine has stopped due to stalling, it can be restarted by depressing the clutch pedal within 3 seconds of the engine stopping.
  The engine cannot be restarted even if the clutch pedal is depressed under the following conditions:
  - The driver's door is open.
  - The driver's seat belt is unfastened.
  - The clutch pedal is not released completely after the engine stalled.
  - The clutch pedal is depressed with the engine not stopped completely.

▼Gear Shift Indicator

The gear shift indicator supports you to obtain optimum fuel economy and smooth driving. It displays the selected gear position in the instrument cluster as well as notifies the driver to change to the most suitable gear position corresponding to the actual driving condition.

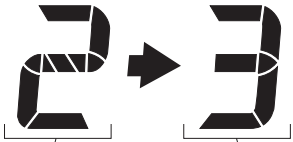

Selected gear position　　Suitable gear position

Indication	Condition
Numeral	The selected gear position is displayed.
▶ and numeral	Shift up or down to the indicated gear position is recommended.

⚠ CAUTION

Do not rely solely on the shift-up/shift-down recommendations by indications. The actual driving situation might require shift operations different from indication. To avoid the risk of accidents, the road and traffic conditions have to be judged correctly by the driver before shifting.

NOTE

The gear shift indicator turns off when the following operations are performed.

- The vehicle is stopped.
- The vehicle is put in neutral.
- The vehicle is driven in reverse.
- The clutch is not fully engaged when accelerating from a stop.
- The clutch pedal remains depressed for 2 seconds or longer while driving.

Automatic Transaxle Controls

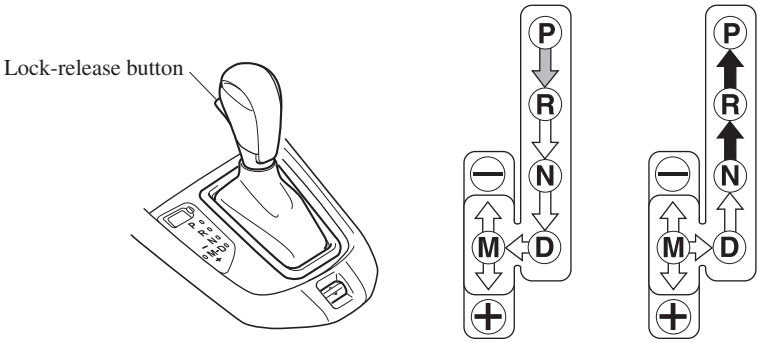

Various Lockouts:

Indicates that you must depress the brake pedal and hold in the lock-release button to shift (The ignition must be switched ON).

Indicates the selector lever can be shifted freely into any position.

Indicates that you must hold in the lock-release button to shift.

NOTE

The Sport AT has an option that is not included in the traditional automatic transaxle that gives the driver the option of selecting each gear instead of leaving it to the transaxle to shift gears. Even if you intend to use the automatic transaxle functions as a traditional automatic, you should also be aware that you can inadvertently shift into manual shift mode and an inappropriate gear may be retained as the vehicle speed increases. If you notice the engine speed going higher or hear the engine racing, confirm you have not accidentally slipped into manual shift mode (page 4-51).

▼Shift Position Indication

The selector position is indicated when the ignition is switched ON.

NOTE

If one of the following actions is performed, the selector position is displayed for 5 minutes even if the ignition switch is in a position other than ON.

- The ignition is switched OFF.
- The driver's door is opened.

Gear position indication

In manual shift mode, the “M” of the shift position indication illuminates and the numeral for the selected gear is displayed.

▼Warning Light

The warning light turns on when the system has a malfunction.
Refer to Warning Lights on page 4-39.

▼Transaxle Ranges

- The shift position indicator light in the instrument cluster illuminates. Refer to Warning/Indicator Lights on page 4-38.
- The selector lever must be in P or N to operate the starter.

P (Park)

P locks the transaxle and prevents the front wheels from rotating.

⚠ *WARNING*

Always set the selector lever to P and set the parking brake:
Only setting the selector lever to the P position without using the parking brake to hold the vehicle is dangerous. If P fails to hold, the vehicle could move and cause an accident.

⚠ CAUTION

- Shifting into P, N or R while the vehicle is moving can damage your transaxle.
- Shifting into a driving gear or reverse when the engine is running faster than idle can damage the transaxle.

R (Reverse)

In position R, the vehicle moves only backward. You must be at a complete stop before shifting to or from R, except under rare circumstances as explained in Rocking the Vehicle (page 3-50).

N (Neutral)

In N, the wheels and transaxle are not locked. The vehicle will roll freely even on the slightest incline unless the parking brake or brakes are on.

⚠ WARNING

If the engine is running faster than idle, do not shift from N or P into a driving gear:
It's dangerous to shift from N or P into a driving gear when the engine is running faster than idle. If this is done, the vehicle could move suddenly, causing an accident or serious injury.

Do not shift into N when driving the vehicle:
Shifting into N while driving is dangerous. Engine braking cannot be applied when decelerating which could lead to an accident or serious injury.

⚠ CAUTION

Do not shift into N when driving the vehicle. Doing so can cause transaxle damage.

NOTE

Apply the parking brake or depress the brake pedal before moving the selector lever from N to prevent the vehicle from moving unexpectedly.

D (Drive)

D is the normal driving position. From a stop, the transaxle will automatically shift through a 6-gear sequence.

M (Manual)

M is the manual shift mode position. Gears can be shifted up or down by operating the selector lever. Refer to Manual Shift Mode on page 4-51.

▼Active Adaptive Shift (AAS)

Active Adaptive Shift (AAS) automatically controls the transaxle shift points to best suit the road conditions and driver input. This improves driving feel. The transaxle may switch to AAS mode when driving up and down slopes, cornering, driving at high elevations, or depressing the accelerator pedal quickly while the selector lever is in the D position. Depending on the road and driving conditions/vehicle operations, gear shifting could be delayed or not occur, however, this does not indicate a problem because the AAS mode will maintain the optimum gear position.

▼Shift-Lock System

The shift-lock system prevents shifting out of P unless the brake pedal is depressed.

To shift from P:

1. Depress and hold the brake pedal.
2. Start the engine.
3. Press and hold the lock-release button.
4. Move the selector lever.

NOTE

- When the ignition is switched to ACC or the ignition is switched off, the selector lever cannot be shifted from P.
- The ignition cannot be switched to OFF if the selector lever is not in P.

▼Shift-Lock Override

If the selector lever will not move from P using the proper shift procedure, continue to hold down the brake pedal.

Type A

1. Remove the shift-lock override cover using a cloth-wrapped flat head screwdriver.
2. Insert a screwdriver and push it down.

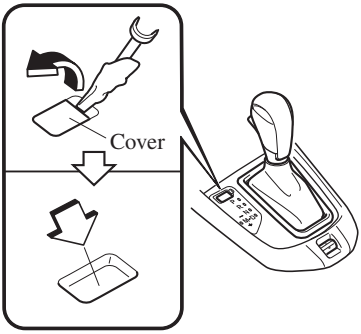

3. Press and hold the lock-release button.
4. Move the selector lever.

Take the vehicle to an expert repairer, we recommend an Authorised Mazda Repairer to have the system checked.

Type B

1. Press the lock-release button with the button pressed.

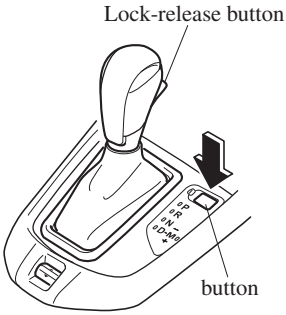

2. Move the selector lever.

Take the vehicle to an expert repairer, we recommend an Authorised Mazda Repairer to have the system checked.

▼Manual Shift Mode

The manual shift mode gives you the feel of driving a manual transaxle vehicle by allowing you to operate the selector lever manually. This allows you to control engine rpm and torque to the drive wheels much like a manual transaxle when more control is desired.

To change to manual shift mode, shift the lever from D to M.

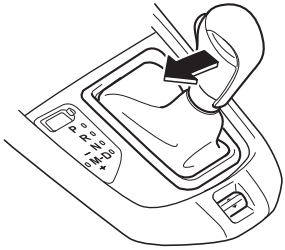

NOTE
Changing to manual shift mode while driving will not damage the transaxle.

To return to automatic shift mode, shift the lever from M to D.

NOTE
• If you change to manual shift mode when the vehicle is stopped, the gear will shift to M1. • If you change to manual shift mode without depressing the accelerator pedal when driving in D range, 5th gear/6th gear, the gear will shift to M4/M5.

Indicators

Manual shift mode indication

In manual shift mode, the “M” of the shift position indication in the instrument panel illuminates.

Gear position indication

The numeral for the selected gear illuminates.

Type A

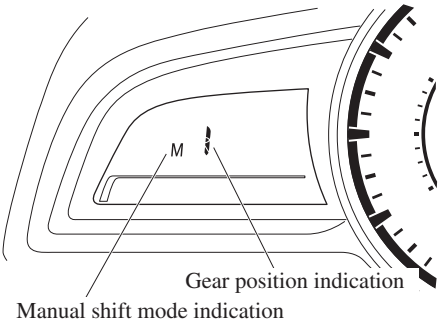

Type B

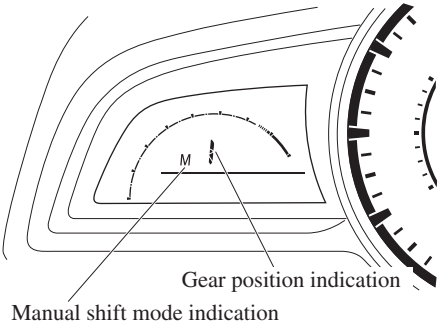

Type C

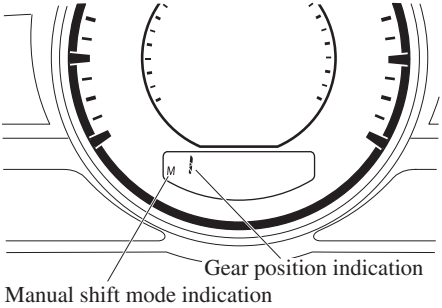

Type D

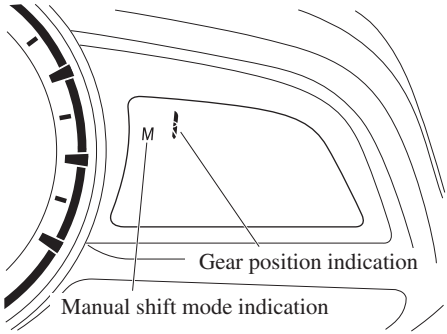

NOTE

- If the gears cannot be shifted down when driving at higher speeds, the gear position indication will flash twice to signal that the gears cannot be shifted down (to protect the transaxle).
- If the automatic transaxle fluid (ATF) temperature becomes too high, there is the possibility that the transaxle will switch to automatic shift mode, cancelling manual shift mode and turning off the gear position indication illumination. This is a normal function to protect the AT. After the ATF temperature has decreased, the gear position indication illumination turns back on and driving in manual shift mode is restored.

Gear Shift Indicator*

The gear shift indicator supports you to obtain optimum fuel economy and smooth driving. It displays the selected gear position in the instrument cluster as well as notifies the driver to change to the most suitable gear position corresponding to the actual driving condition.

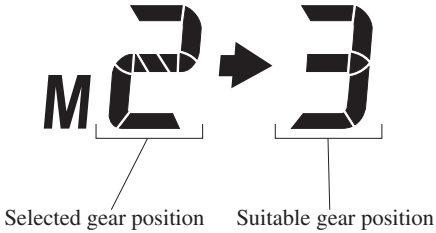

Indication	Condition
Numeral	The selected gear position is displayed.
➡ and numeral	Shift up or down to the indicated gear position is recommended.

⚠ CAUTION

Do not rely solely on the shift-up/shift-down recommendations by indications. The actual driving situation might require shift operations different from indication. To avoid the risk of accidents, the road and traffic conditions have to be judged correctly by the driver before shifting.

*Some models.

NOTE

The gear shift indicator turns off when the following operations are performed.

- The vehicle is stopped.
- Manual shift mode is cancelled.

Manually shifting up

You can shift gears up by operating the shift lever or the steering shift switches*.
M1 → M2 → M3 → M4 → M5 → M6

Using selector lever

To shift up to a higher gear, tap the shift lever back + once.

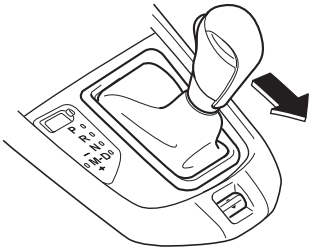

Using steering shift switch*

To shift up to a higher gear with the steering shift switches, pull the UP switch (**+/OFF**) toward you once with your fingers.

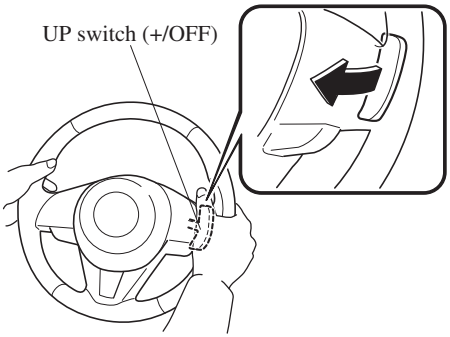

⚠ *WARNING*

Keep your hands on the steering wheel rim when using fingers on the steering shift switches:
Putting your hands inside the rim of the steering wheel when using the steering shift switches is dangerous. If the driver's air bag were to deploy in a collision, your hands could be impacted causing injury.

NOTE

- When driving slowly, the gears may not shift up.
- In manual shift mode, do not run the engine with the tachometer needle in the RED ZONE. When the engine rpm is high, a gear may shift up automatically to protect the engine.

*Some models.

NOTE

- When depressing the accelerator fully, the transaxle will shift to a lower gear, depending on vehicle speed.
- The steering shift switch can be used temporarily even if the selector lever is in the D position while driving. In addition, it returns to automatic shift mode when the UP switch (**+/OFF**) is pulled rearward for a sufficient amount of time.

Manually shifting down

You can shift gears down by operating the shift lever or the steering shift switches*.
M6 → M5 → M4 → M3 → M2→ M1

Using selector lever

To shift down to a lower gear, tap the selector lever forward **−** once.

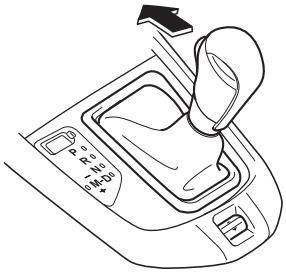

Using steering shift switch*

To shift down to a lower gear with the steering shift switches, pull the DOWN switch **−** toward you once with your fingers.

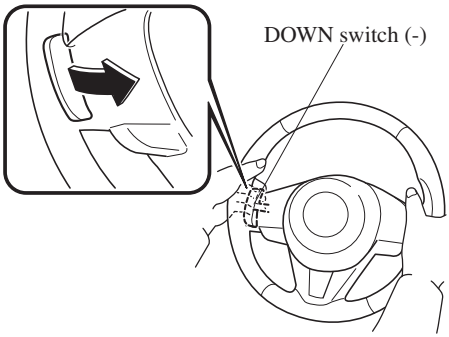

⚠ *WARNING*

Do not use engine braking on slippery road surfaces or at high speeds:
Shifting down while driving on wet, snowy, or frozen roads, or while driving at high speeds causes sudden engine braking, which is dangerous. The sudden change in tyre speed could cause the tyres to skid. This could lead to loss of vehicle control and an accident.

Keep your hands on the steering wheel rim when using fingers on the steering shift switches:
Putting your hands inside the rim of the steering wheel when using the steering shift switches is dangerous. If the driver's air bag were to deploy in a collision, your hands could be impacted causing injury.

*Some models.

NOTE

- When driving at high speeds, the gear may not shift down.
- During deceleration, the gear may automatically shift down depending on vehicle speed.
- When depressing the accelerator fully, the transaxle will shift to a lower gear, depending on vehicle speed.

Second gear fixed mode

When the selector lever is moved back + while the vehicle speed is about 10 km/h (6.2 mph) or less, the transaxle is set in the second gear fixed mode. The gear is fixed in second while in this mode for easier acceleration from a stop and driving on slippery roads such as snow-covered roads.

If the selector lever is moved back + or forward − while in the second gear fixed mode, the mode will be cancelled.

Shift gear (shifting) speed limit

For each gear position while in the manual mode, the speed limit is set as follows: When the selector lever is operated within the range of the speed limit, the gear is shifted.

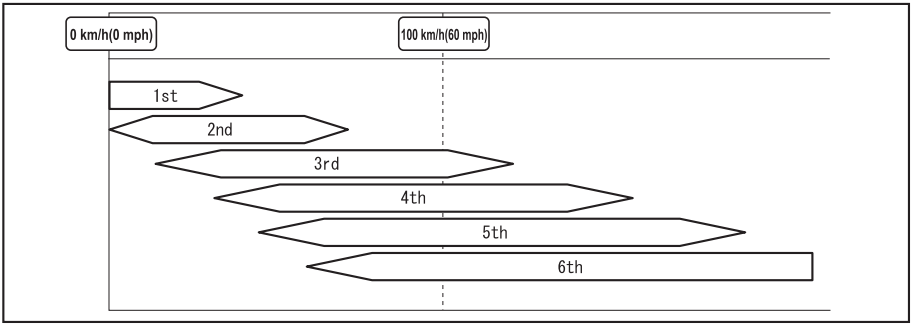

Shift up

The gear does not shift up while the vehicle speed is lower than the speed limit.

Shift down

The gear does not shift down while the vehicle speed exceeds the speed limit.
If the vehicle speed exceeds the speed limit and the gear does not shift down, the gear position indication flashes 2 times to notify the driver that the gear cannot be shifted.

Kickdown

When the accelerator pedal is depressed fully while driving, the gear shifts down.

NOTE
The gear also shifts down using kickdown while in the second gear fixed mode.

Auto-shift down

The gear shifts down automatically depending on the vehicle speed during deceleration.

NOTE
If the vehicle comes to a stop while in the second gear fixed mode, the gear remains in second.

▼Direct Mode*

Direct mode can be used for temporarily switching gears by operating the steering shift switch while the vehicle is being driven with the selector lever in the D range.
While in direct mode, the D and M indication illuminate and the gear position in use is illuminated.
Direct mode is cancelled (released) under the following conditions.

- The UP switch (**+/OFF**) is pulled rearward for a certain amount of time or longer.
- The vehicle is driven for a certain amount of time or longer (time differs depending on the driving conditions while operating).
- The vehicle is stopped or moving at a slow speed.

Type A

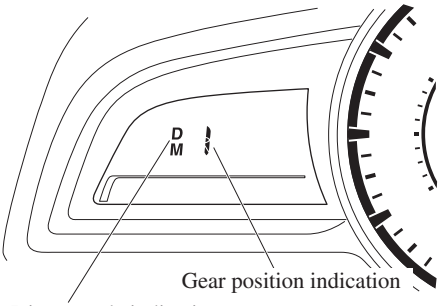

Type B

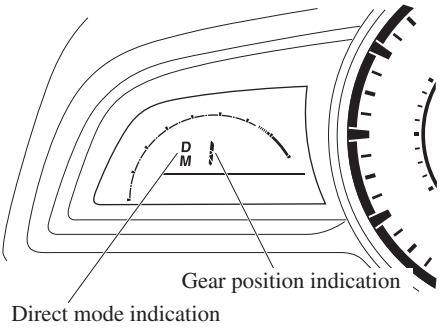

Type C

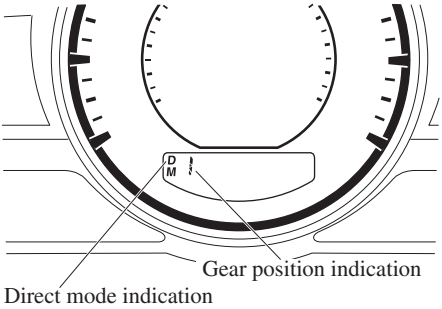

Type D

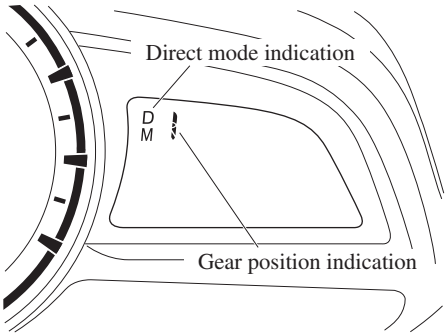

*Some models.

NOTE

Shifting up and down while in direct mode may not be possible depending on the vehicle speed. In addition, because direct mode is cancelled (released) depending on the rate of acceleration or if the accelerator is fully depressed, use of the manual shift mode is recommended if you need to drive the vehicle in a particular gear for long periods.

▼Driving Tips

⚠ *WARNING*

Do not let the vehicle move in a direction opposite to the direction selected by the selector lever:
Do not let the vehicle move backward with the selector lever in a forward position, or do not let the vehicle move forward with the selector lever in the reverse position. Otherwise, the engine may stop, causing the loss of the power brake and power steering functions, and make it difficult to control the vehicle which could result in an accident.

Passing

For extra power when passing another vehicle or climbing steep grades, depress the accelerator fully. The transaxle will shift to a lower gear, depending on vehicle speed.

NOTE

(Some models)
The accelerator pedal may initially feel heavy as it is being depressed, then feel lighter as it is depressed further. This change in pedal force aids the engine control system in determining how much the accelerator pedal has been depressed for performing kickdown, and functions to control whether or not kickdown should be performed.

Climbing steep grades from a stop

To climb a steep grade from a stopped position:

1. Depress the brake pedal.
2. Shift to D or M1, depending on the load weight and grade steepness.
3. Release the brake pedal while gradually accelerating.

Descending steep grades

When descending a steep grade, shift to lower gears, depending on load weight and grade steepness. Descend slowly, using the brakes only occasionally to prevent them from overheating.

Lighting Control

▼Headlights

Turn the headlight switch to turn the headlights, other exterior lights and instrument panel illumination on or off.
When the lights are turned on, the lights-on indicator light in the instrument cluster turns on.

NOTE
• To prevent discharging the battery, do not leave the lights on while the engine is off unless safety requires them. • Headlights do not blind drivers approaching in the opposite direction no matter what side of the road you must drive your vehicle (left-hand or right-hand traffic). Therefore, it is not necessary to adjust the optical axis of the headlights when switching temporarily to driving on the opposite side of the road (left-hand or right-hand traffic).

Without auto-light control

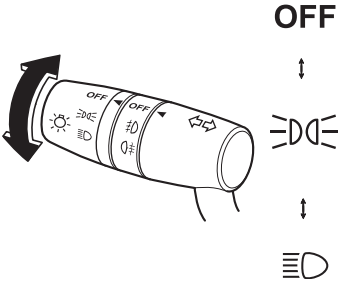

Switch Position	OFF					
Ignition Position	**ON**	**ACC or OFF**	**ON**	**ACC or OFF**	**ON**	**ACC or OFF**
Headlights	Off	Off	Off	Off	On	Off
Running lights*	On	Off	Off	Off	Off	Off
Tail lights Position lights Number plate lights Instrument panel illumination	Off	Off	On	On	On	On*1

*1 If the driver's door is opened or 30 s have elapsed with the lights turned on, the lights turn off.

With auto-light control

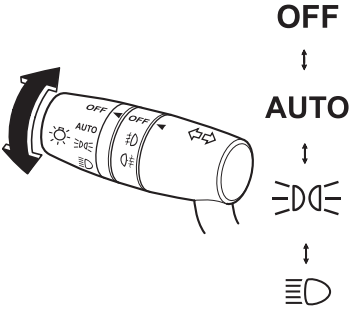

Switch Position	OFF		AUTO					
Ignition Position	**ON**	**ACC or OFF**	**ON**	**ACC or OFF**	**ON**	**ACC or OFF**	**ON**	**ACC or OFF**
Headlights	Off	Off	Auto*1	Off	Off	Off	On	Off
Running lights*	On	Off	Auto*1	Off	Off	Off	Off	Off
Tail lights Position lights Number plate lights Instrument panel illumination	Off	Off	Auto*1	On*2/ Off*3	On	On	On	On*4

*1 The headlight and other light settings switch automatically depending on the surrounding brightness detected by the sensor.
*2 While the lights are turned on, they will remain on even if the ignition is switched to a position other than ON. If the driver's door is opened or 30 s have elapsed with the lights turned on, the lights turn off.
*3 When the ignition is switched to a position other than ON, the lights will not turn on even if the light switch is switched to AUTO.
*4 If the driver's door is opened or 30 s have elapsed with the lights turned on, the lights turn off.

 *Some models.

Auto-light control

When the headlight switch is in the AUTO position and the ignition is switched ON, the light sensor senses the surrounding lightness or darkness and automatically turns the headlights, other exterior lights and instrument panel illumination on or off (see chart above).

⚠ CAUTION

- Do not shade the light sensor by adhering a sticker or a label on the windscreen. Otherwise the light sensor will not operate correctly.

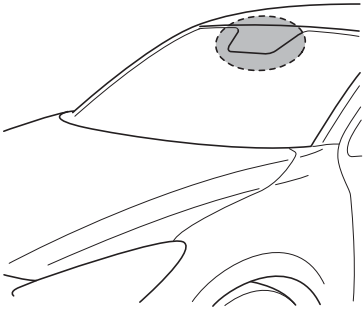

- The light sensor also works as a rain sensor for the auto-wiper control. Keep hands and scrapers clear of the windscreen when the wiper lever is in the AUTO position and the ignition is switched ON as fingers could be pinched or the wipers and wiper blades damaged when the wipers activate automatically. If you are going to clean the windscreen, be sure the wipers are turned off completely — this is particularly important when clearing ice and snow — when it is particularly tempting to leave the engine running.

NOTE

- The headlights, other exterior lights and instrument panel illumination may not turn off immediately even if the surrounding area becomes well-lit because the light sensor determines that it is night time if the surrounding area is continuously dark for several minutes such as inside long tunnels, traffic jams inside tunnels, or in indoor parking lots.
  In this case, the lights turn off if the light switch is turned to the OFF position.
- When the headlight switch is in the AUTO position and the ignition is switched to ACC or the ignition is switched off, the headlights, other exterior lights and instrument panel illumination will turn off.
- The instrument panel illumination can be adjusted by rotating the knob in the instrument cluster. Also, the antidazzle mode can be changed by rotating the knob until a beep sound is heard. To adjust the brightness of the instrument panel illumination: Refer to Instrument Panel Illumination on page 4-32.
- The sensitivity of the AUTO lights may be changed by an Authorised Mazda Repairer. Refer to Personalisation Features on page 9-13.

▼Headlight High-Low Beam

The headlights switch between high and low beams by moving the lever forward or backward.

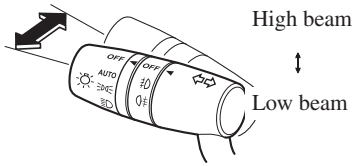

When the headlight high-beams are on, the headlight high-beam indicator light is turned on.

▼Flashing the Headlights

Can be used when the ignition is switched ON.
To flash the headlights, pull the lever fully towards you (the headlight switch does not need to be on).

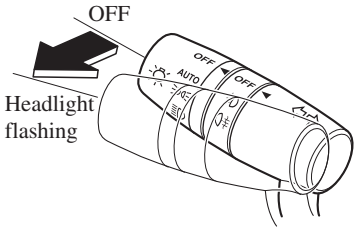

The headlight high-beam indicator light in the instrument cluster illuminates simultaneously. The lever will return to the normal position when released.

▼Coming Home Light System

The coming home light turns on the headlights (low beams) when the lever is operated.

<u>To turn on the lights</u>

When the lever is pulled with the ignition switched to ACC or OFF, the low beam headlights turn on.
The headlights turn off after a certain period of time has elapsed after the doors are closed.

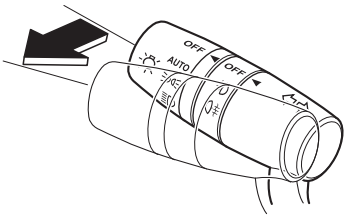

NOTE

- The time until the headlights turn off after all of the doors are closed can be changed.
  Refer to Personalisation Features on page 9-13.
- If no operations are done for 3 minutes after the lever is pulled, the headlights turn off.
- The headlights turn off if the lever is pulled again while the headlights are illuminated.

▼Leaving Home Light System

The leaving home light turns on the lights when the transmitter unlock button is pressed while away from the vehicle.
The following lights turn on when the leaving home light is operated.
Low beams, Position lights, Tail lights, Number plate lights

To turn on the lights

When the ignition switch and the headlight switch are in the following conditions, the headlights will illuminate when the transmitter unlock button is pressed and the vehicle receives the transmitter signal. The headlights turn off after a certain period of time has elapsed (30 seconds).

- Ignition switch: off
- Headlight switch: or

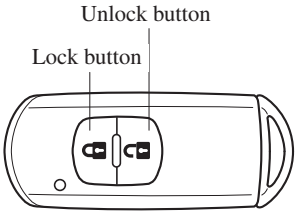

NOTE

- Operation of the leaving home light can be turned on or off.
  Refer to Personalisation Features on page 9-13.
- When the transmitter lock button is pressed and the vehicle receives the transmitter signal, the headlights turn off.
- When the headlight switch is in a position other than or , the headlights turn off.

▼Headlight Levelling*

The number of passengers and weight of cargo in the luggage compartment change the angle of the headlights.

Auto type

The angle of the headlights will be automatically adjusted when turning on the headlights.

*Some models.

Manual type

The headlight levelling switch is used to adjust the angle of the headlights manually.

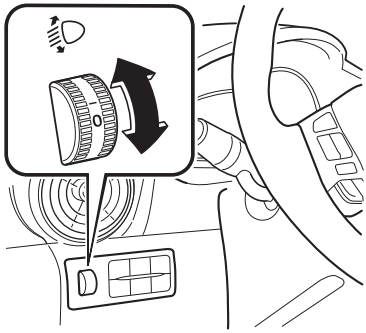

Select the proper headlight angle from the following chart.

Front seat		Rear seat	Load	Switch Position
Driver	Passenger			
×	—	—	—	0
×	×	—	—	0
×	×	×	—	1.5
×	×	×	×	2
×	—	—	×	3

×: Yes
—: No

▼Running Lights*

Some countries require moving vehicles to have their lights on (running lights) during the daytime.

The running lights turn on automatically when the vehicle starts moving.

They turn off when the parking brake is operated or the selector lever is shifted to the P position (automatic transaxle vehicle).

Front Fog Lights*

The front fog lights can be used when the ignition is switched ON.
Use this switch to turn on the front fog lights. The front fog lights will improve visibility at night and during foggy conditions.

To turn the front fog lights on, rotate the fog light switch to the ⇶ or ⇶ position (the fog light switch returns to the ⇶ position automatically).

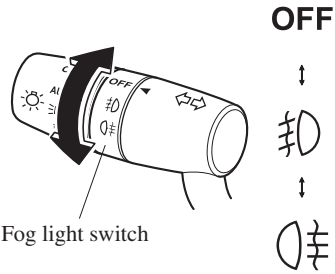

The headlight switch must be in the ≣D or ≣D position before turning on the front fog lights.
The front fog light indicator light in the instrument cluster illuminates while the front fog light are on.

*Some models.

To turn the front fog lights off, do any of the following:

- Rotate the fog light switch to the OFF position.
- Turn the headlight switch to the OFF position.
- Switch the ignition to a position other than ON.

NOTE

- **(With auto-light control)**
  If the fog light switch is in the position or position and the headlight switch is in the **AUTO** position, the front fog lights will turn on when the headlights, the exterior lights and instrument panel illumination turn on.
- If the fog light switch is rotated to the position (the fog light switch returns to the position automatically), the rear fog light will also illuminate, and the rear fog light indicator light in the instrument cluster will also illuminate.

Rear Fog Light*

The rear fog light can be used when the ignition is switched ON.
The rear fog light helps your vehicle to be seen.
When the lights are turned on, the rear fog lights indicator light in the instrument cluster turns on.

▼Type A (With Front Fog Light)

The headlight switch must be in the or position before turning on the rear fog light.

To turn the rear fog light on, rotate the fog light switch to the position (the fog light switch returns to the position automatically).
The rear fog light indicator light in the instrument cluster illuminates while the rear fog light is on.

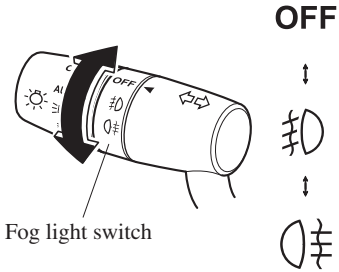

*Some models.

To turn the rear fog light off, do any of the following:

- Rotate the fog light switch to the position again (the fog light switch returns to the position automatically).
- Turn the headlight switch to the OFF position.
- Switch the ignition to a position other than ON.

The rear fog light indicator light in the instrument cluster goes off when the rear fog light is turned off.

NOTE

- The front fog lights turns on when the rear fog light is turned on.
- If the fog light switch is rotated to the position (the fog light switch returns to the position automatically), the front fog light indicator light in the instrument cluster will also illuminate.
- **(With auto-light control)**
  When the headlight switch is in the AUTO position, the rear fog light turns on when the headlights, the exterior lights and instrument panel illumination are on.

▼Type B (Without Front Fog Light)

The headlights must be turned on to turn on the rear fog light.

To turn the rear fog light on, rotate the fog light switch to the position (the fog light switch returns to its original position automatically).
The rear fog light indicator light in the instrument cluster illuminates while the rear fog light is on.

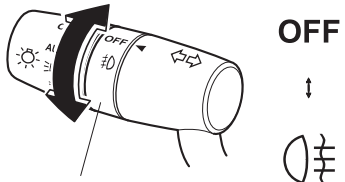

Fog light switch

To turn the rear fog light off, do any of the following:

- Rotate the fog light switch to the position again (the fog light switch returns to its original position automatically).
- Rotate the fog light switch to the OFF position.
- Turn the headlight switch to the OFF position.

The rear fog light indicator light in the instrument cluster goes off when the rear fog light is turned off.

NOTE

(With auto-light control)

When the headlight switch is in the AUTO position and the headlights, exterior lights and instrument panel illuminated, the rear fog light turns on when the rear fog light switch is turned on.

Turn and Lane-Change Signals

The ignition must be switched ON to use the turn and lane-change signals.

▼Direction Indicators

Move the signal lever down (for a left turn) or up (for a right turn) to the stop position. The signal will self-cancel after the turn is completed.

If the indicator light continues to flash after a turn, manually return the lever to its original position.

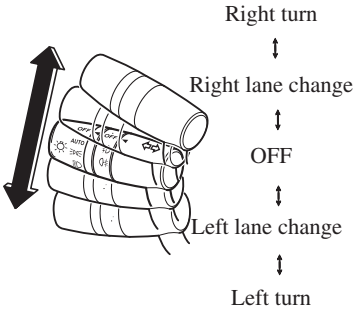

The direction indicators in the instrument cluster flash according to the operation of the direction indicator lever to show which signal is working.

NOTE

- If an indicator light stays on without flashing or if it flashes abnormally, one of the direction indicator bulbs may be burned out.
- A personalised function is available to change the turn indicator sound volume. (page 9-13)

▼Lane-Change Signals

Move the lever halfway toward the direction of the lane change—until the indicator flashes— and hold it there. It will return to the off position when released.

▼Three-Flash Turn Signal

After releasing the direction indicator lever, the direction indicator flashes three times. The operation can be cancelled by moving the lever in the direction opposite to which it was operated.

NOTE

The three-flash turn signal function can be switched to operable/inoperable using the personalisation function.
Refer to Personalisation Features on page 9-13.

Windscreen Wipers and Washer

The ignition must be switched ON to use the wipers.

⚠ *WARNING*

Use only windscreen washer fluid or plain water in the reservoir:
Using radiator antifreeze as washer fluid is dangerous. If sprayed on the windscreen, it will dirty the windscreen, affect your visibility, and could result in an accident.

Only use windscreen washer fluid mixed with anti-freeze protection in freezing weather conditions:
Using windscreen washer fluid without anti-freeze protection in freezing weather conditions is dangerous as it could freeze on the windscreen and block your vision which could cause an accident. In addition, make sure the windscreen is sufficiently warmed using the defroster before spraying the washer fluid.

NOTE

Because heavy ice and snow can jam the wiper blades, the wiper motor is protected from motor breakdown, overheating and possible fire by a circuit breaker. This mechanism will automatically stop operation of the blades, but only for about 5 minutes.
If this happens, turn off the wiper switch and park off the right-of-way, and remove the snow and ice.
After 5 minutes, turn on the switch and the blades should operate normally. If they do not resume functioning, consult an expert repairer, we recommend an Authorised Mazda Repairer as soon as possible. Drive to the side of the road and park off the right-of-way. Wait until the weather clears before trying to drive with the wipers inoperative.

▼Windscreen Wipers

Turn the wipers on by pressing the lever up or down.

With intermittent wiper

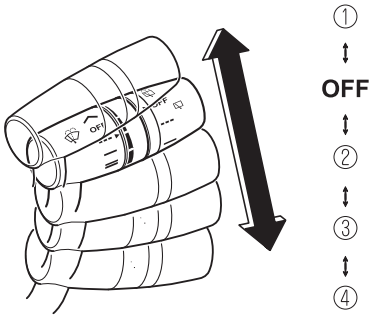

Switch Position			Wiper operation
No.	Type A	Type B	
①	⌃	MIST	Operation while pulling up lever
OFF			Stop
②	---	INT	Intermittent
③	—	LO	Low speed
④	=	HI	High speed

Variable-speed intermittent wipers

Set the lever to the intermittent position and choose the interval timing by rotating the ring.

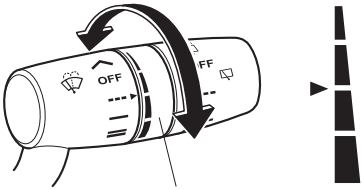

With auto-wiper control

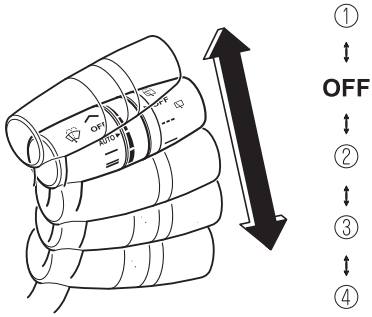

Switch Position			Wiper operation
No.	Type A	Type B	
①	⌃	MIST	Operation while pulling up lever
OFF			Stop
②	AUTO	AUTO	Auto control
③	—	LO	Low speed
④	=	HI	High speed

Auto-wiper control

When the wiper lever is in the **AUTO** position, the rain sensor senses the amount of rainfall on the windscreen and turns the wipers on or off automatically (off—intermittent—low speed—high speed).

The sensitivity of the rain sensor can be adjusted by turning the switch on the wiper lever.
From the centre position (normal), rotate the switch upward for higher sensitivity (faster response) or rotate it downward for less sensitivity (slower response).

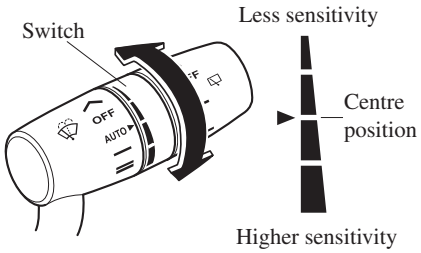

⚠ CAUTION

- Do not shade the rain sensor by adhering a sticker or a label on the windscreen. Otherwise the rain sensor will not operate correctly.

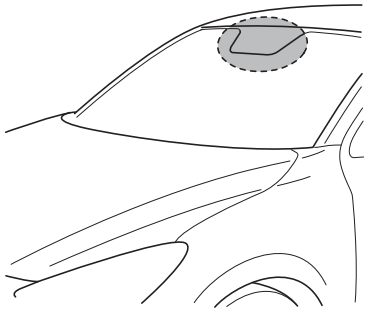

⚠ CAUTION

- When the wiper lever is in the **AUTO** position and the ignition is switched ON, the wipers may move automatically in the following cases:
  - If the windscreen above the rain sensor is touched or wiped with a cloth.
  - If the windscreen is struck with a hand or other object from either outside or inside the vehicle.

  Keep hands and scrapers clear of the windscreen when the wiper lever is in the **AUTO** position and the ignition is switched ON as fingers could be pinched or the wipers and wiper blades damaged when the wipers activate automatically.
  If you are going to clean the windscreen, be sure the wipers are turned off completely (when it is most likely that the engine is left running) this is particularly important when clearing ice and snow.

NOTE

- Switching the auto-wiper lever from the OFF to the **AUTO** position while driving activates the windscreen wipers once, after which they operate according to the rainfall amount.
- The auto-wiper control may not operate when the rain sensor temperature is about –10 °C (14 °F) or lower, or about 85 °C (185 °F) or higher.

NOTE

- If the windscreen is coated with water repellent, the rain sensor may not be able to sense the amount of rainfall correctly and auto-wiper control may not operate properly.
- If dirt or foreign matter (Such as ice or matter containing salt water) adheres to the windscreen above the rain sensor or if the windscreen is iced, it could cause the wipers to move automatically. However, if the wipers cannot remove this ice, dirt or foreign matter, the auto-wiper control will stop operation. In this case, set the wiper lever to the low speed position or high speed position for manual operation, or remove the ice, dirt or foreign matter by hand to restore the auto-wiper operation.
- If the auto-wiper lever is left in the AUTO position, the wipers could operate automatically from the effect of strong light sources, electromagnetic waves, or infrared light because the rain sensor uses an optical sensor. It is recommended that the auto-wiper lever be switched to the OFF position other than when driving the vehicle under rainy conditions.
- The auto-wiper control functions can be turned off.
  Refer to Personalisation Features on page 9-13.

▼Windscreen Washer

Pull the lever toward you and hold it to spray washer fluid.

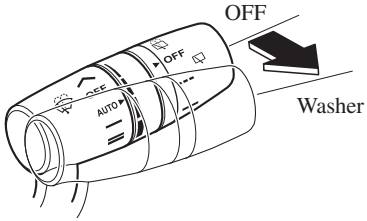

NOTE

If the windscreen washer is turned on when the windscreen wipers are not operating, the windscreen wipers operate a few times.

If the washer does not work, inspect the fluid level (page 6-32). If the fluid level is normal, consult an expert repairer, we recommend an Authorised Mazda Repairer.

NOTE

(With headlight washers)
When the headlights are on, the headlight washers operate automatically once every fifth time the windscreen washer operates.
Refer to Headlight Washer on page 4-75.

Rear Window Wiper and Washer*

The ignition must be switched ON to use the wiper.

▼Rear Window Wiper

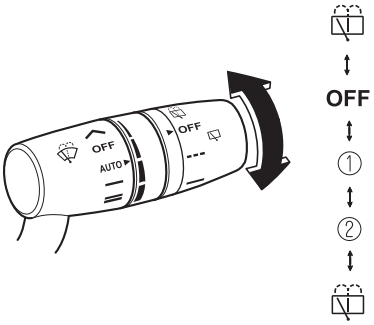

Turn the wiper on by turning the rear wiper/washer switch.

Switch Position			Wiper operation
No.	Type A	Type B	
OFF			Stop
①	---	INT	Intermittent
②	—	ON	Normal

▼Rear Window Washer

To spray washer fluid, turn the rear wiper/washer switch to either of the position. After the switch is released, the washer will stop.
If the washer does not work, inspect the fluid level (page 6-32). If the fluid level is normal and the washer still does not work, consult an expert repairer, we recommend an Authorised Mazda Repairer.

Headlight Washer*

The ignition must be switched ON and the headlights must be turned on.

The headlight washers operate automatically once every fifth time the windscreen washer operates.

If you want to operate headlight washers, double flick the wiper lever.

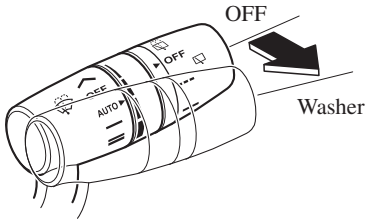

NOTE

If air enters the headlight washer fluid pipe under conditions such as when the vehicle is brand-new or after an empty washer tank is replenished with washer fluid, washer fluid will not spray even when the wiper lever is operated. If this occurs, perform the following procedure:

1. Start the engine.
2. Turn on the headlights.
3. Double flick the wiper lever several times until the washer fluid sprays.

*Some models.

Rear Window Defogger

The rear window defogger clears fog from the rear window.

The ignition must be switched ON to use the defogger.

Press the switch to turn on the rear window defogger. The rear window defogger operates for about 15 minutes and then turns off automatically.
The indicator light illuminates when the defogger is operating.

To turn off the rear window defogger before the 15 minutes has elapsed, press the switch again.

Manual Air-Conditioning

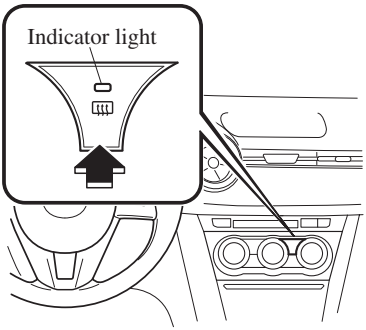

Fully Automatic Air-Conditioning

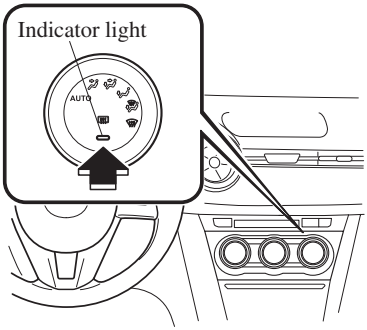

⚠ CAUTION

Do not use sharp instruments or window cleaners with abrasives to clean the inside of the rear window surface. They may damage the defogger grid inside the window.

NOTE

This defogger is not designed for melting snow. If there is an accumulation of snow on the rear window, remove it before using the defogger.

▼Mirror Defogger*

To turn on the mirror defoggers, switch the ignition ON and press the rear window defogger switch (page 4-76).

*Some models.

Horn

To sound the horn, press the mark on the steering wheel.

Hazard Warning Flasher

The hazard warning lights should always be used when you stop on or near a roadway in an emergency.

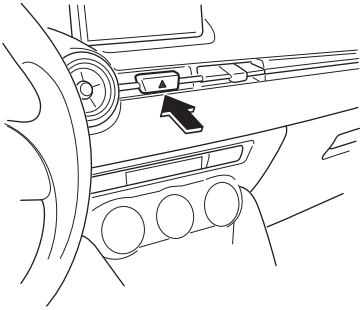

The hazard warning lights warn other drivers that your vehicle is a traffic hazard and that they must take extreme caution when near it.

Depress the hazard warning flasher and all the direction indicators will flash. The hazard warning indicator lights in the instrument cluster flash simultaneously.

NOTE

- The direction indicators do not work when the hazard warning lights are on.
- Check local regulations about the use of hazard warning lights while the vehicle is being towed to verify that it is not in violation of the law.
- If the brake pedal is depressed while driving on slippery roads, the emergency stop signal system could operate causing all the turn and lane change signals to flash. Refer to Emergency Stop Signal System on page 4-82.
- While the emergency stop signal system is operating, all the direction indicators automatically flash rapidly to caution the driver of a vehicle following behind your vehicle of a sudden braking situation. Refer to Emergency Stop Signal System on page 4-82.

Brake System

▼Foot Brake

This vehicle has power-assisted brakes that adjust automatically through normal use.

Should power-assist fail, you can stop by applying greater force than normal to the brake pedal. But the distance required to stop will be greater than usual.

⚠ *WARNING*

Do not coast with the engine stalled or turned off, find a safe place to stop:
Coasting with the engine stalled or turned off is dangerous. Braking will require more effort, and the brake's power-assist could be depleted if you pump the brake. This will cause longer stopping distances or even an accident.

Shift to a lower gear when going down steep hills:
Driving with your foot continuously on the brake pedal or steadily applying the brakes for long distances is dangerous. This causes overheated brakes, resulting in longer stopping distances or even total brake failure. This could cause loss of vehicle control and a serious accident. Avoid continuous application of the brakes.

⚠ *WARNING*

Dry off brakes that have become wet by driving slowly, releasing the accelerator pedal and lightly applying the brakes several times until the brake performance returns to normal:
Driving with wet brakes is dangerous. Increased stopping distance or the vehicle pulling to one side when braking could result in a serious accident. Light braking will indicate whether the brakes have been affected.

⚠ CAUTION

- Do not drive with your foot held on the clutch pedal or brake pedal, or hold the clutch pedal depressed halfway unnecessarily. Doing so could result in the following:
  - The clutch and brake parts will wear out more quickly.
  - The brakes can overheat and adversely affect brake performance.

⚠ CAUTION

- Always depress the brake pedal with the right foot. Applying the brakes with the unaccustomed left foot could slow your reaction time to an emergency situation resulting in insufficient braking operation.

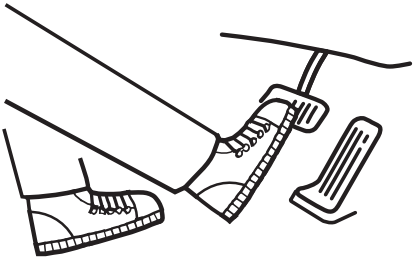

- Wear shoes appropriate for driving in order to avoid your shoe contacting the brake pedal when depressing the accelerator pedal.

▼Parking Brake

⚠ CAUTION

Driving with the parking brake on will cause excessive wear of the brake parts.

NOTE

For parking in snow, refer to Winter Driving (page 3-50) regarding parking brake use.

Setting the parking brake

Depress the brake pedal and then firmly pull the parking brake lever fully upwards with sufficient force to hold the vehicle in a stationary position.

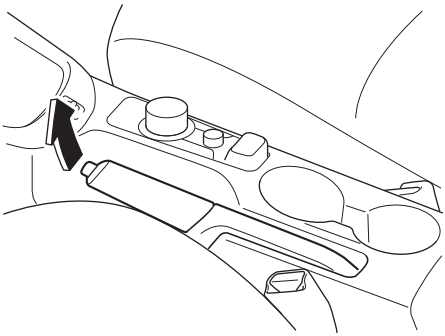

Releasing the parking brake

Depress the brake pedal and pull the parking brake lever upwards, then press the release button. While holding the button, lower the parking brake lever all the way down to the released position.

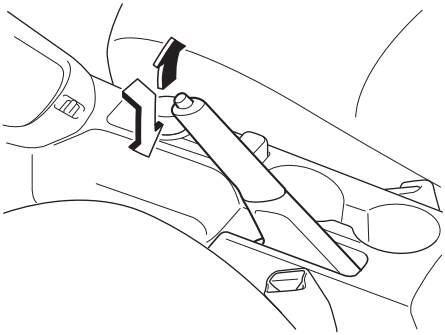

▼Warning Light

The warning light turns on when the system has a malfunction.
Refer to Warning Lights on page 4-39.

▼Brake Pad Wear Indicator

When the disc brake pads become worn, the built-in wear indicators contact the disc plates. This causes a screeching noise to warn that the pads should be replaced.

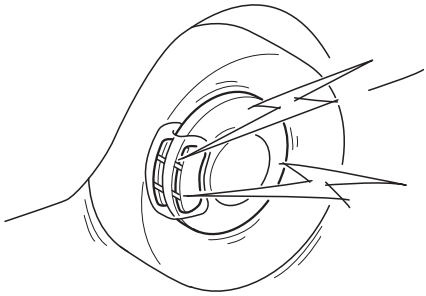

When you hear this noise, consult an expert repairer, we recommend an Authorised Mazda Repairer as soon as possible.

⚠ *WARNING*

<u>Do not drive with worn disc pads:</u> Driving with worn disc pads is dangerous. The brakes could fail and cause a serious accident. As soon as you hear a screeching noise consult an expert repairer, we recommend an Authorised Mazda Repairer.

▼Brake Assist

During emergency braking situations when it is necessary to depress the brake pedal with greater force, the brake assist system provides braking assistance, thus enhancing braking performance.

When the brake pedal is depressed hard or depressed more quickly, the brakes apply more firmly.

NOTE

- When the brake pedal is depressed hard or depressed more quickly, the pedal will feel softer but the brakes will apply more firmly. This is a normal effect of the brake assist operation and does not indicate a malfunction.
- When the brake pedal is depressed hard or depressed more quickly, a motor/pump operation noise may be heard. This is a normal effect of the brake assist and does not indicate a malfunction.
- The brake assist equipment does not supersede the functionality of the vehicle's main braking system.

Emergency Stop Signal System

Your Mazda is equipped with an emergency stop signal system that is designed to determine whether you are depressing the brake pedal with greater force than during normal braking such as in a situation requiring emergency braking. If the system determines that such a situation is occurring, it flashes all the direction indicators rapidly to caution the driver of the vehicle following behind your vehicle of the sudden braking situation. The system turns off when it determines that the brake pedal is released or that an emergency braking situation no longer exists based on the reduced vehicle speed.

NOTE

- If you bring your vehicle to a complete stop while all the direction indicators are flashing rapidly, the rapid flashing of all the direction indicators changes back to the normal flashing pattern.
- The emergency stop signal system does not operate at vehicle speeds under about 60 km/h (37 mph).
- If the brake pedal is depressed while driving on slippery roads, the emergency stop signal system could operate causing all the turn and lane change signals to flash.

Hill Launch Assist (HLA)*

Hill Launch Assist (HLA) is a function which assists the driver in accelerating from a stop while on a slope. When the driver releases the brake pedal and depresses the accelerator pedal while on a slope, the function prevents the vehicle from rolling. The braking force is maintained automatically after the brake pedal is released on a steep grade.
For vehicles with a manual transaxle, Hill Launch Assist (HLA) operates on a downward slope when the shift lever is in the reverse (R) position, and on an upward slope when the shift lever is in a position other than the reverse (R) position.
For vehicles with an automatic transaxle, Hill Launch Assist (HLA) operates on a downward slope when the shift lever is in the reverse (R) position, and on an upward slope when the shift lever is in a forward gear.

*Some models.

⚠ *WARNING*

Do not rely completely on Hill Launch Assist (HLA):
Hill Launch Assist (HLA) is an auxiliary device for accelerating from a stop on a slope. The system only operates for about two seconds and therefore, relying only on the system, when accelerating from a stop is dangerous because the vehicle may move (roll) unexpectedly and cause an accident.
The vehicle could roll depending on the vehicle's load or if it is towing something. In addition, for vehicles with a manual transaxle, the vehicle could still roll depending on how the clutch pedal or the accelerator pedal is operated.
Always confirm the safety around the vehicle before starting to drive the vehicle.

NOTE

- Hill Launch Assist (HLA) does not operate on a gentle slope. In addition, the gradient of the slope on which the system will operate changes depending on the vehicle's load.
- Hill Launch Assist (HLA) does not operate if the parking brake is applied, the vehicle has not stopped completely, or the clutch pedal is released.
- While Hill Launch Assist (HLA) is operating, the brake pedal may feel stiff and vibrate, however, this does not indicate a malfunction.
- Hill Launch Assist (HLA) does not operate while the TCS/DSC indicator light is illuminated.
  Refer to Warning/Indicator Lights on page 4-38.
- Hill Launch Assist (HLA) does not turn off even if the DSC OFF switch is pressed to turn off the TCS/DSC.
- (Automatic Transaxle)
  Although the Hill Launch Assist (HLA) does not operate during idling stop, the vehicle roll prevention function operates to prevent vehicle roll.

Antilock Brake System (ABS)

The ABS control unit continuously monitors the speed of each wheel. If one wheel is about to lock up, the ABS responds by automatically releasing and reapplying that wheel's brake.

The driver will feel a slight vibration in the brake pedal and may hear a chattering noise from the brake system. This is normal ABS system operation. Continue to depress the brake pedal without pumping the brakes.

The warning light turns on when the system has a malfunction.
Refer to Warning Lights on page 4-39.

⚠ *WARNING*

Do not rely on ABS as a substitute for safe driving:
The ABS cannot compensate for unsafe and reckless driving, excessive speed, tailgating (following another vehicle too closely), driving on ice and snow, and hydroplaning (reduced tyre friction and road contact because of water on the road surface). You can still have an accident.

NOTE

- Braking distances may be longer on loose surfaces (snow or gravel, for example) which usually have a hard foundation. A vehicle with a normal braking system may require less distance to stop under these conditions because the tyres will build up a wedge of surface layer when the wheels skid.
- The sound of the ABS operating may be heard when starting the engine or immediately after starting the vehicle, however, it does not indicate a malfunction.

Traction Control System (TCS)*

The Traction Control System (TCS) enhances traction and safety by controlling engine torque and braking. When the TCS detects driving wheel slippage, it lowers engine torque and operates the brakes to prevent loss of traction.

This means that on a slick surface, the engine adjusts automatically to provide optimum power to the drive wheels, limiting wheel spin and loss of traction.

The warning light turns on when the system has a malfunction.
Refer to Warning Lights on page 4-39.

⚠ *WARNING*

Do not rely on the Traction Control System (TCS) as a substitute for safe driving:
The Traction Control System (TCS) cannot compensate for unsafe and reckless driving, excessive speed, tailgating (following another vehicle too closely), and hydroplaning (reduced tyre friction and road contact because of water on the road surface). You can still have an accident.

Use snow tyres or tyre chains and drive at reduced speeds when roads are covered with ice and/or snow:
Driving without proper traction devices on snow and/or ice-covered roads is dangerous. The Traction Control System (TCS) alone cannot provide adequate traction and you could still have an accident.

NOTE

To turn off the TCS, press the DSC OFF switch (page 4-87).

▼TCS/DSC Indicator Light

This indicator light stays on for a few seconds when the ignition is switched ON. If the TCS or DSC is operating, the indicator light flashes.

If the light stays on, the TCS, DSC or the brake assist system may have a malfunction and they may not operate correctly. Take your vehicle to an expert repairer, we recommend an Authorised Mazda Repairer.

NOTE

- In addition to the indicator light flashing, a slight labouring sound will come from the engine. This indicates that the TCS/DSC is operating properly.
- On slippery surfaces, such as fresh snow, it will be impossible to achieve high rpm when the TCS is on.

*Some models.

Dynamic Stability Control (DSC)*

The Dynamic Stability Control (DSC) automatically controls braking and engine torque in conjunction with systems such as ABS and TCS to help control side slip when driving on slippery surfaces, or during sudden or evasive manoeuvring, enhancing vehicle safety.

Refer to ABS (page 4-84) and TCS (page 4-85).

DSC operation is possible at speeds greater than 20 km/h (12 mph).

The warning light turns on when the system has a malfunction.
Refer to Warning Lights on page 4-39.

⚠ *WARNING*

Do not rely on the Dynamic Stability Control as a substitute for safe driving:
The Dynamic Stability Control (DSC) cannot compensate for unsafe and reckless driving, excessive speed, tailgating (following another vehicle too closely), and hydroplaning (reduced tyre friction and road contact because of water on the road surface). You can still have an accident.

⚠ CAUTION

- The DSC may not operate correctly unless the following are observed:
  - Use tyres of the correct size specified for your Mazda on all four wheels.
  - Use tyres of the same manufacturer, brand and tread pattern on all four wheels.
  - Do not mix worn tyres.
- The DSC may not operate correctly when tyre chains are used or a temporary spare tyre is installed because the tyre diameter changes.

▼TCS/DSC Indicator Light

This indicator light stays on for a few seconds when the ignition is switched ON. If the TCS or DSC is operating, the indicator light flashes.

If the light stays on, the TCS, DSC or the brake assist system may have a malfunction and they may not operate correctly. Take your vehicle to an expert repairer, we recommend an Authorised Mazda Repairer.

*Some models.

▼DSC OFF Indicator Light

This indicator light stays on for a few seconds when the ignition is switched ON. It also illuminates when the DSC OFF switch is pressed and TCS/DSC is switched off.
Refer to DSC OFF Switch on page 4-87.

If the light remains illuminated and the TCS/DSC is not switched off, take your vehicle to an expert repairer, we recommend an Authorised Mazda Repairer. The DSC may have a malfunction.

▼DSC OFF Switch

Press the DSC OFF switch to turn off the TCS/DSC. The DSC OFF indicator light in the instrument cluster will illuminate.

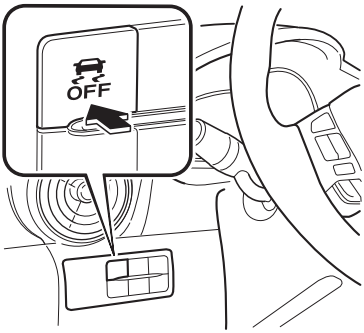

Press the switch again to turn the TCS/DSC back on. The DSC OFF indicator light will turn off.

NOTE

- When DSC is on and you attempt to free the vehicle when it is stuck, or drive it out of freshly fallen snow, the TCS (part of the DSC system) will activate. Depressing the accelerator will not increase engine power and freeing the vehicle may be difficult. When this happens, turn off the TCS/DSC.
- If the TCS/DSC is off when the engine is turned off, it automatically activates when the ignition is switched ON.
- Leaving the TCS/DSC on will provide the best traction.
- If the DSC OFF switch is pressed and held for 10 seconds or more, the DSC OFF switch malfunction detection function operates and the DSC system activates automatically. The DSC OFF indicator light turns off while the DSC system is operative.
- **(Vehicles with Smart City Brake Support (SCBS))**
  If the Smart City Brake Support (SCBS) operates with the TCS/DSC turned off, the TCS/DCS becomes operational automatically.

i-ELOOP*

i-ELOOP is a regenerative braking system. When you depress the brake pedal or use engine braking, the kinetic energy that occurs is converted to electrical energy by the power generator and the converted electrical energy is stored in the rechargeable battery (capacitor and battery). The stored electricity is used as power to charge the battery and the vehicle's electrical devices.

- A variable voltage alternator is incorporated in the power generator which converts the kinetic energy to electricity and can generate electricity efficiently according to the vehicle conditions.
- A capacitor is used to store large amounts of electricity instantly which can be utilized quickly.
- A DC-DC converter is incorporated which steps down the stored electricity to voltage useable by the vehicle's electrical devices.

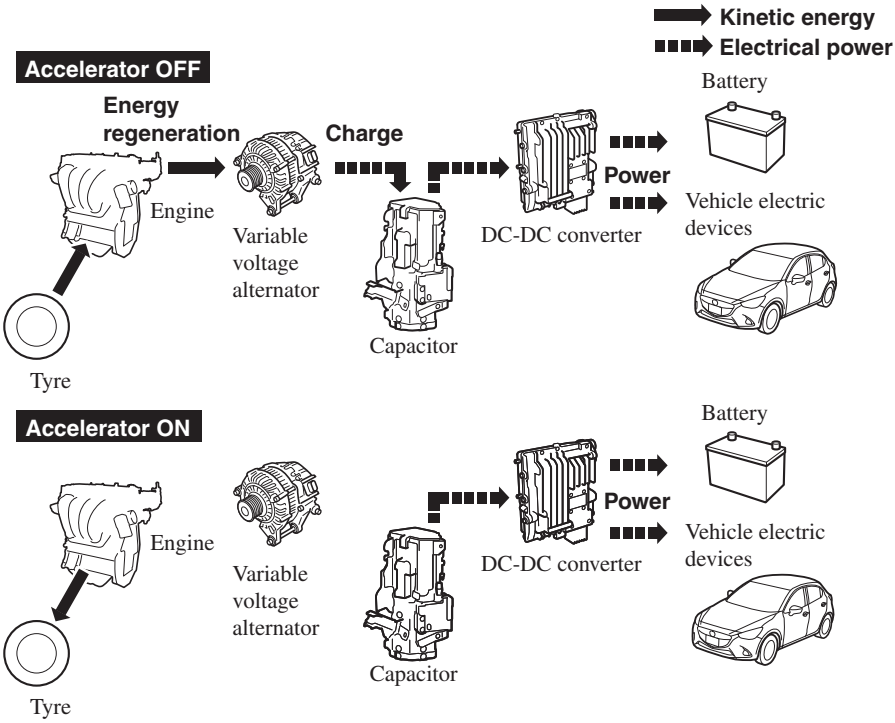

 *Some models.

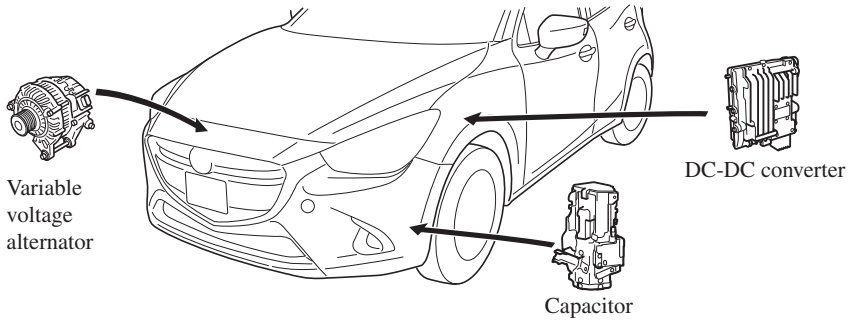

⚠ CAUTION

High-current electricity flows through the following parts, therefore do not touch them.

- Variable voltage alternator
- DC-DC converter
- Capacitor

NOTE

- A difference in the fuel economy may occur depending on how the vehicle's electrical devices are used.
- If the capacitor is to be disposed of, always consult an expert repairer, we recommend an Authorised Mazda Repairer.
  For details, go to the following URL.
  http://www.mazda.com/csr/environment/recycling

▼i-ELOOP Indicator Light/Control Status Display

The driver is notified of the i-ELOOP power generating status and the vehicle conditions by the i-ELOOP indicator light (green) and the control status display.

i-ELOOP Indicator Light (Green) (vehicle without type C/type D audio)

The light turns on during power generation.

Control status display (vehicles with type C/type D audio)

The i-ELOOP power generating status is displayed in the centre display.
Refer to Control Status Display on page 4-93.

Fuel Economy Monitor*

For vehicles with type C/type D audio, the Control Status, Fuel Consumption, and Effectiveness are switched and displayed by operating each icon in the display.
In addition, after completing a trip, the total energy efficiency to date is displayed in the ending display when the ending display is turned on.

1. Select the icon on the home screen to display the applications screen.
2. Select the “Fuel Economy Monitor”.
3. Operate the commander switch or touch the screen and display the menu.

NOTE
When the menu is displayed by touching the screen, the display is hidden automatically after 6 seconds.

4. Select the icon in the menu and perform the operation. Each icon operates as follows:

Indication on display	Control status
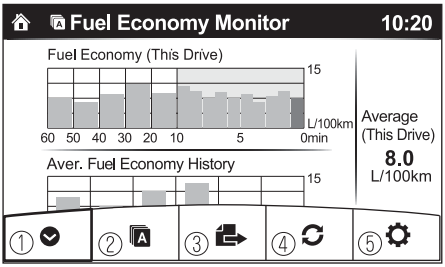	① Hides the menu display.
	② Displays the application screen.
	③ Switches the Fuel Economy Monitor in the order of Control Status, Fuel Consumption, and Effectiveness.
	④ Resets the fuel economy data.
	⑤ Displays the following setting screen. •Ending display on/off switching •On/off switching for function which synchronizes reset fuel economy data to trip meter (Trip A)

*Some models.

Fuel Economy Monitor

▼Fuel Consumption Display

Information regarding the fuel economy is displayed.

Indication on display	Control status
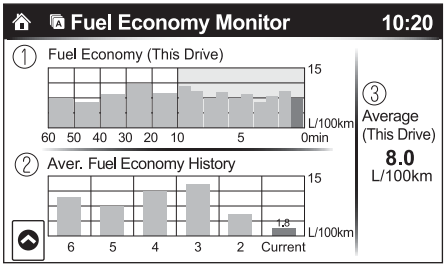	① Displays the fuel economy for the past 60 minutes. •Displays the fuel economy every minute for the past 1 to 10 minutes. •Displays the fuel economy every 10 minutes for the past 10 to 60 minutes.
	② Displays the average fuel economy over the past 5 resets and after the current reset.
	③ Calculates the average fuel economy every minute after vehicle travel begins, and displays it.

NOTE

- The fuel economy data can be reset by doing the following operation:
  - Press the reset switch from the menu screen.
  - When the function which synchronizes the fuel economy monitor and the trip meter is on, reset trip A of the trip meter.
  - Delete the average fuel economy information displayed in the trip computer.
- After resetting the fuel economy data, “-- -” is displayed while the average fuel economy is calculated.

▼Control Status Display

The i-stop operation status and the i-ELOOP power generating status are displayed.

Indication on display	Control status
With i-ELOOP system 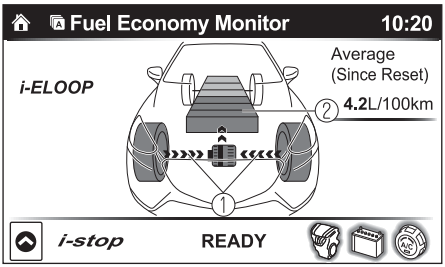 	① Displays the level of electricity generated by regenerative braking.
	② Displays the amount of the electricity stored in the rechargeable battery.
With i-ELOOP system 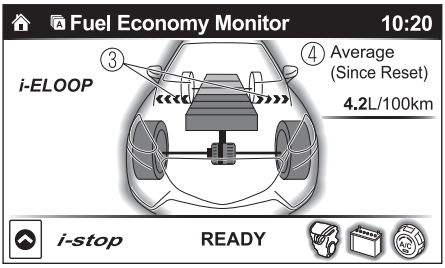 	③ Displays the status of the electricity stored in the rechargeable battery and being supplied to the electrical devices (whole vehicle in display is illuminated simultaneously).
	④ Displays the accumulated fuel economy.

Fuel Economy Monitor

Indication on display	Control status
With i-ELOOP system 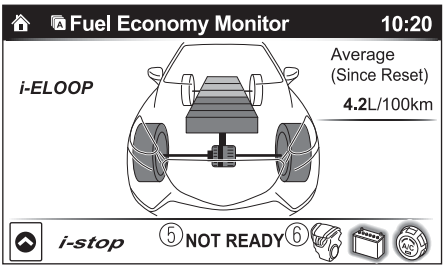 	⑤ Displays the readiness status as to whether operation of the i-stop function is available.
Without i-ELOOP system 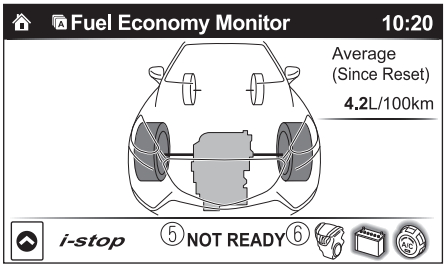 	⑥ Displays the operation readiness status of the i-stop function on the vehicle side (engine, battery, and A/C) using icon colouring. The blue colour indicates that the i-stop function is ready to operate, and the grey colour indicates that it is not ready for operation.

Indication on display	Control status
With i-ELOOP system 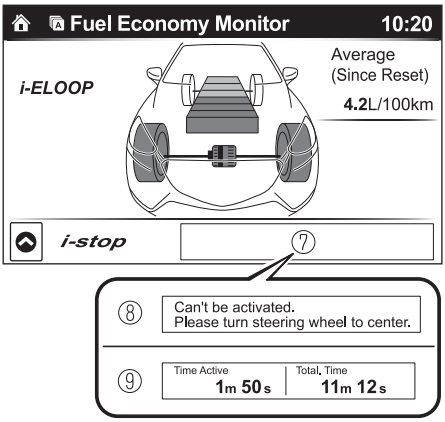 	⑦ Displays the i-stop function status while the vehicle is stopped.
	⑧ Indicates the operations required by the driver to operate the i-stop function while it is not operating.
Without i-ELOOP system 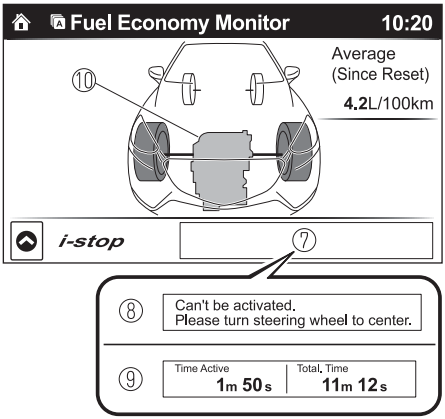 	⑨ Displays the current amount of time that the i-stop function has been operating and the accumulated amount of time that it has been operating.
	⑩ The i-stop function operation status is indicated by the colour of the engine area. The colour is green during i-stop function operation, and grey when it is not operating.

▼Effectiveness Display

The actual performance of the energy efficiency is displayed.

Indication on display	Control status
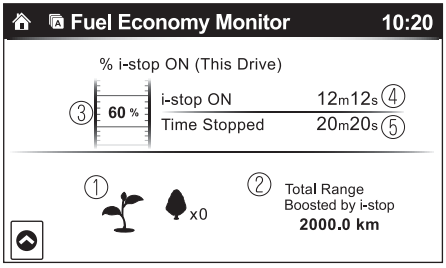	① The leaf graphic grows according to the amount of CO_2 emissions reduced by the system effects. The cumulative total amount of leaf growth is indicated in terms of the number of tree graphics.
	② Displays the total driving distance which could be extended by the operation of the i-stop function.
	③ Displays the percentage of time that the vehicle was stopped by the i-stop function operation out of the total amount of time that the vehicle was stopped.
	④ Displays the amount of time that the i-stop function has operated.
	⑤ Displays the total amount of time that the vehicle was stopped.

▼Ending Screen Display

If the ending display on the fuel economy monitor is on when the ignition is switched from ON to OFF, the actual energy efficiency (with i-stop function) or the information regarding the fuel economy (without i-stop function) is displayed.

Drive Selection*

Drive selection is a system to switch the vehicle's drive mode. When the sport mode is selected, vehicle's response against accelerator operation is enhanced. Use the sport mode when higher vehicle response is required such as merging onto expressway or accelerating to overtake.

⚠ CAUTION

Do not use the sport mode when driving on slippery roads such as wet or snow-covered roads. It may cause tyre slipping.

NOTE

- When the sport mode is selected, driving at higher engine speeds increases and it may increase fuel consumption. Mazda recommends to cancel the sport mode on normal driving.
- Drive mode cannot be switched in the following conditions:
  - ABS/TCS/DSC is operating
  - Steering wheel is being operated abruptly

*Some models.

▼Drive Selection Switch

Press the drive selection switch forward (“SPORT”) to select the sport mode. Pull the drive selection switch back (“—”) to cancel the sport mode.

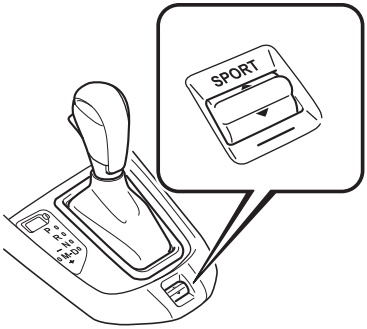

NOTE

- When the ignition is switched off, the sport mode is cancelled.
- Depending on the driving conditions when sport mode is selected, the vehicle may perform shift-down or slightly accelerate.

▼Select Mode Indicator Light

When the sport mode is selected, the select mode indicator light turns on in the instrument cluster.

NOTE

If the mode cannot be switched to drive mode, the select mode indicator light flashes to notify the driver.

Power Steering

- Power steering is only operable when the engine is running. If the engine is off or if the power steering system is inoperable, you can still steer, but it requires more physical effort.
  If the steering feels stiffer than usual during normal driving or the steering vibrates, consult an expert repairer, we recommend an Authorised Mazda Repairer.
- The warning light notifies the driver of system abnormalities and operation conditions.
  In addition, the buzzer may also activate depending on the system abnormality or operation condition.
  Refer to Warning Lights on page 4-39.
  Refer to Power Steering Warning Buzzer on page 7-52.

⚠ CAUTION

Never hold the steering wheel to the extreme left or right for more than 5 seconds with the engine running.
This could damage the power steering system.

i-ACTIVSENSE*

i-ACTIVSENSE is a collective term covering a series of advanced safety and driver support systems which make use of a Forward Sensing Camera (FSC) and radar sensors. These systems consist of active safety and pre-crash safety systems.
These systems are designed to assist the driver in safer driving by reducing the load on the driver and helping to avert collisions or reduce their severity. However, because each system has its limitations, always drive carefully and do not rely solely on the systems.

▼Active Safety Technology

Active Safety Technology supports safer by helping the driver to recognise potential hazards and avert accidents.

Driver awareness support systems

Nighttime visibility

High Beam Control System (HBC) 4-102

Left/right side and rear side detection

Lane Departure Warning System (LDWS) 4-105
Blind Spot Monitoring (BSM) System 4-111

Rear obstruction detection when leaving a parking space

Rear Cross Traffic Alert (RCTA) 4-118

Driver support system

Speed control

Adjustable Speed Limiter 4-121

▼Pre-Crash Safety Technology

Pre-crash safety technology is designed to assist the driver in averting collisions or reduce their severity in situations where they cannot be avoided.

Collision damage reduction in low vehicle speed range

Forward driving

Smart City Brake Support (SCBS) 4-126

 *Some models.

▼Detection Devices

Forward sensing camera (FSC)

The Forward Sensing Camera (FSC) determines the conditions ahead of the vehicle while travelling at night and detects traffic lanes. The following systems also use the Forward Sensing Camera (FSC).

- High Beam Control system (HBC)
- Lane Departure Warning System (LDWS)

The Forward Sensing Camera (FSC) is installed at the top of the windscreen near the rearview mirror.
Refer to Forward Sensing Camera (FSC) on page 4-132.

Laser sensor

The laser sensor emits a near-infrared laser beam and receives the beam reflected off the reflective surface of a vehicle or obstruction in front, and the detected beam is then used for measurement. The laser sensor is used for the Smart City Brake Support (SCBS) system.
The laser sensor is installed at the top of the windscreen near the rearview mirror.
Refer to Laser Sensor on page 4-134.

Radar sensors (rear)

The radar sensors (rear) function by detecting the radio waves reflected off a vehicle approaching from the rear or an obstruction sent from the radar sensor. The following systems also use the radar sensors (rear).

- Blind Spot Monitoring (BSM) System
- Rear Cross Traffic Alert (RCTA)

The radar sensors (rear) are installed inside the rear bumper, one on the left and right sides.
Refer to Radar Sensors (Rear) on page 4-136.

High Beam Control System (HBC)*

The High Beam Control System (HBC) determines the conditions in front of the vehicle using the Forward Sensing Camera (FSC) while driving in darkness to automatically switch the headlights between high and low beams.
Refer to Warning/Indicator Lights on page 4-38.
While driving the vehicle at a speed of about 30 km/h (19 mph), the headlights are switched to high beams when there are no vehicles ahead or approaching in the opposite direction.
The system switches the headlights to low beams when one of the following occurs:

- The system detects a vehicle or the headlights/lights of a vehicle approaching in the opposite direction.
- The vehicle is driven on roads lined with streetlamps or on roads in well-lit cities and towns.
- The vehicle is driven at less than about 20 km/h (12 mph).

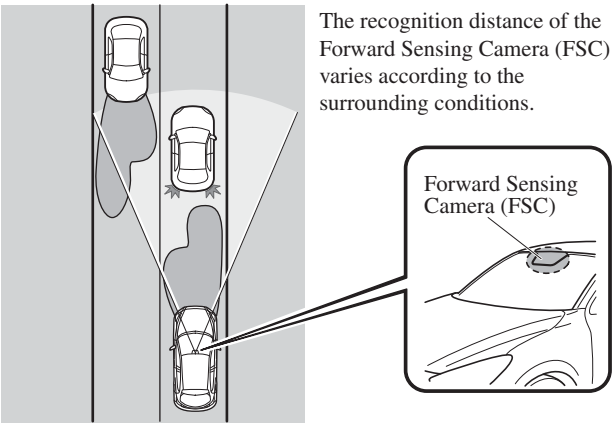

The warning light flashes when the system has a malfunction.
Refer to Warning Lights on page 4-39.

⚠ CAUTION

- Do not adjust the vehicle height, modify the headlight units, or remove the camera, otherwise the system will not operate normally.
- Do not rely excessively on the High Beam Control System (HBC) and drive the vehicle while paying sufficient attention to safety. Switch the headlights between the high beams and low beams manually if necessary.

 *Some models.

NOTE

The timing in which the system switches the headlights changes under the following conditions. If the system does not switch the headlights appropriately, manually switch between high and low beams according to the visibility as well as road and traffic conditions.

- When there are sources of light in the area such as street lamps, illuminated signboards, and traffic signals.
- When there are reflective objects in the surrounding area such as reflective plates and signs.
- When visibility is reduced under rain, snow and foggy conditions.
- When driving on roads with sharp turn or hilly terrain.
- When the headlights/rear lamps of vehicles in front of you or in the opposite lane are dim or not illuminated.
- When there is sufficient darkness such as at dawn or dusk.
- When the luggage compartment is loaded with heavy objects or the rear passenger seats are occupied.
- When visibility is reduced due to a vehicle in front of you spraying water from its tyres onto your windscreen.

▼To Operate the System

The High Beam Control System (HBC) operates to switch the headlights automatically between high and low beams after the ignition is switched ON and the headlight switch is in the AUTO and high beam position.
The High Beam Control System (HBC) determines that it is dark based on the brightness of the surrounding area. At the same time, the High Beam Control System (HBC) indicator light (green) in the instrument cluster illuminates.

NOTE

- When the vehicle speed is 30 km/h (19 mph) or higher, the headlights automatically switch to high beams when there are no vehicles ahead or approaching in the opposite direction.
  When the vehicle speed is less than about 20 km/h (12 mph), the High Beam Control System (HBC) switches the headlights to low beams.
- The low beams may not switch to high beams when cornering.
- Operation of the High Beam Control System (HBC) function can be disabled. Refer to Personalisation Features on page 9-13.

▼Manual Switching

Switching to low beams

Shift the lever to the low beam position.
The High Beam Control System (HBC) indicator light (green) turns off.

Switching to high beams

Turn the headlight switch to the position.
The High Beam Control System (HBC) indicator light (green) turns off and the is illuminated.

Lane Departure Warning System (LDWS)*

The LDWS system notifies the driver that the vehicle may be deviating from its lane.
The system detects the white or yellow lines on the traffic lane using the Forward Sensing Camera (FSC) and if it determines that the vehicle may be deviating from its lane, it notifies the driver using the active driving display (vehicles with active driving display), and by flashing the LDWS warning light and activating the LDWS warning beep.
Use the LDWS when you drive the vehicle on roads with white or yellow lines.
Refer to Forward Sensing Camera on page 4-132.

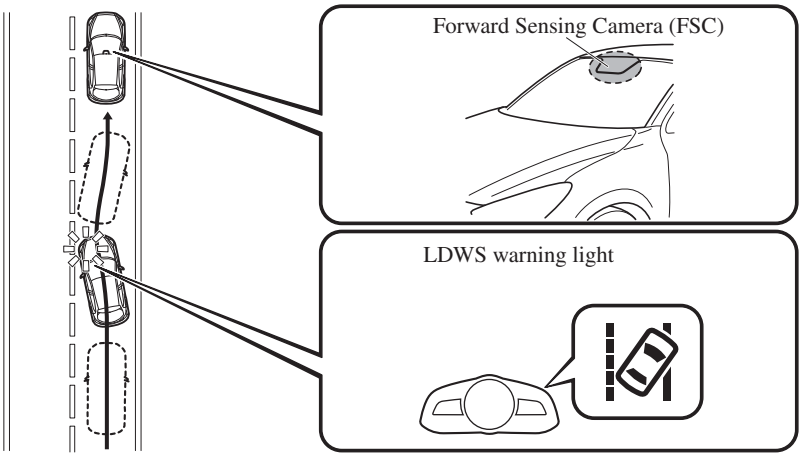

The warning light illuminates when the system has a malfunction.
Refer to Warning Lights on page 4-39.

⚠ *WARNING*

Do not use the LDWS under the following conditions:
The system may not operate adequately according to the actual driving conditions, resulting in an accident.

- ***Driving on roads with tight curves.***
- ***Driving under bad weather conditions (rain, fog, and snow).***

The functions of the LDWS have limitations:
Always stay on course using the steering wheel and drive with care. The system is not designed to compensate for a driver's lack of caution and if you rely too much on the LDWS it could lead to an accident. The driver is responsible for assuring lane changes and other manoeuvres. Always pay attention to the direction in which the vehicle is travelling and the vehicle's surroundings.

*Some models.

⚠ CAUTION

Do not modify the suspension. If the vehicle height or the damping force of the suspensions is changed, the LDWS may not operate correctly.

NOTE

- If your vehicle deviates from its traffic lane, the LDWS operates (warning sound and indicator light). Steer the vehicle adequately to drive the vehicle to the centre of the lane.
- When the direction indicator lever is operated for a lane change, the LDWS warning is automatically cancelled. The LDWS warning becomes operable when the direction indicator lever is returned and the system detects the white or yellow lines.
- If the steering wheel, accelerator pedal, or brake pedal is operated abruptly and the vehicle moves close to a white or yellow line, the system determines that the driver is making a lane change and the LDWS warning is automatically cancelled.
- The LDWS may not operate during the period immediately after the vehicle has deviated from its lane and the LDWS has operated, or the vehicle deviates from its lane repeatedly within a short period of time.
- The LDWS does not operate if it does not detect the white or yellow lines of the traffic lane.

NOTE

- Under the following conditions, the LDWS may not be able to detect white or yellow lines correctly and the LDWS may not operate correctly.
  - If an object placed on the instrument panel is reflected in the windscreen and picked up by the camera.
  - Heavy luggage is loaded in the luggage compartment or on the rear seat and the vehicle is inclined.
  - The tyre pressures are not adjusted to the specified pressure.
  - When the vehicle is driven on the entry and exit to or from the rest area or tollgate of a highway.
  - The white or yellow lines are less visible because of dirt or paint flaking.
  - The vehicle ahead is running near a white or yellow line and the line is less visible.
  - A white or yellow line is less visible because of bad weather (rain, fog, or snow).
  - The vehicle is driven on a temporary lane or section with a closed lane due to construction.
  - A misleading line is picked up on the road such as a temporary line for construction, or because of shade, lingering snow, or grooves filled with water.
  - The surrounding brightness suddenly changes such as when entering or exiting a tunnel.
  - The illumination of the headlights is weakened because of dirt or the optical axis is deviated.
  - The windscreen is dirty or foggy.
  - Back-light is reflecting from the road surface.
  - The road surface is wet and shiny after rain, or there are puddles on the road.
  - The shade of a guardrail parallel to a white or yellow line is on the road.
  - The width of a lane is excessively narrow or wide.
  - The road is excessively uneven.
  - The vehicle is shaken after hitting a road bump.
  - There are two or more adjacent white or yellow lines.
  - There are various road markings or lane markings of various shapes near an intersection.

▼When The System Operates

1. The system goes on operation standby when the LDWS switch is pressed and the LDWS OFF indicator light in the instrument cluster turns off.
   For vehicles equipped with the active driving display, the driving lane (border lines) is indicated in the display.

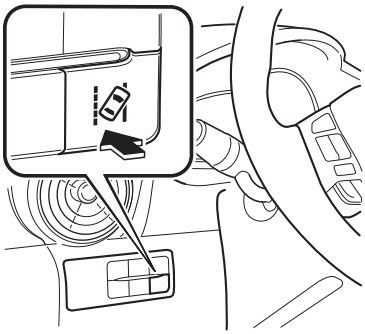

Indication on display

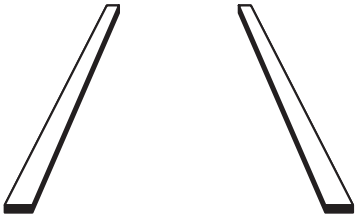

2. Drive the vehicle in the centre of the driving lane while the LDWS OFF indicator light is turned off. The system becomes operational when all of the following conditions are met.

- The vehicle is driven in the centre of the driving lane with the white or yellow lines on the left and right sides, or on either side.
- The vehicle speed is 70 km/h (44 mph) or faster.
- The vehicle is driven on a straight road or road with gentle curves.

For vehicles equipped with the active driving display, the driving lane is indicated in the display.

Indication on display

The LDWS does not operate in the following cases:

- The system cannot detect white or yellow lines.
- The vehicle speed is less than 65 km/h (40 mph).
- The vehicle is making a sharp turn.
- The vehicle is making a curve at an inadequate speed.

NOTE

- The LDWS does not operate until the system detects a white or yellow line on either the left or right.
- When the system detects a white or yellow line on one side only, the system will activate the warning only when the vehicle deviates on the side where the white or yellow line is being detected.
- The distance and warning sensitivity (likelihood of a warning) which the system uses to determine the possibility of a lane departure can be changed.
  Refer to Personalisation Features on page 9-13.

Auto cancel

In the following cases, the LDWS cancels automatically and the LDWS warning light in the instrument cluster turns on.

- The temperature inside the camera is high or low.
- The windscreen around the camera is foggy.
- The windscreen around the camera is blocked by an obstruction, causing poor forward visibility.

For vehicles equipped with the active driving display, the lane (border lines) is indicated in the display. The LDWS is enabled automatically when the operation conditions are met, and the LDWS warning light turns off.

Auto cancel warning

When the following operations are performed, the LDWS determines that the driver intends to make a lane change and the LDWS warning is cancelled automatically. The LDWS is enabled automatically after the driver performs the operation.

- The steering wheel is operated abruptly.
- The brake pedal is depressed abruptly.
- The accelerator pedal is depressed abruptly.
- The direction indicator lever is operated (after the direction indicator lever is returned, the LDWS may not operate for about 3 seconds which is the period of time required to make a lane correction).

NOTE

After about 60 seconds have elapsed with the direction indicator lever left operating, the LDWS warning may operate if the vehicle is close to a white or yellow line.

▼Cancelling The System

Press the LDWS switch to cancel the LDWS. The LDWS OFF indicator light turns on.
For vehicles with the active driving display, the driving lane indication in the active driving display is not indicated when the LDWS is cancelled.

▼LDWS Warning

If the system determines that there is the possibility of a lane departure, the LDWS warning beep activates and the LDWS warning light flashes. Operate the steering wheel appropriately and steer the vehicle to the centre of the lane.
For vehicles equipped with the active driving display, if there is the possibility of a lane departure, the system indicates the direction it determines that the vehicle is deviating in the active driving display.
Indication on display

NOTE

- If the LDWS warning sound is set to rumble*1, the sound will be heard from the vehicle speaker on the side which the system determined the vehicle may be deviating from its lane.
- It may be difficult to hear the LDWS warning beep depending on the surrounding conditions such as outside noise.
- The volume of the LDWS warning sound can be changed.
  Refer to Personalisation Features on page 9-13.
- The type of warning sound (rumble*1/beep) on the LDWS can be changed.
  Refer to Personalisation Features on page 9-13.

*1 A rumble strip is a series of grooves in the road pavement surface positioned at specific intervals, and when the vehicle passes over it a vibration and rumble sound is produced which alerts the driver that the vehicle is departing from the lane.
The rumble sound is a reproduction of the sound which occurs when a vehicle passes over a rumble strip.

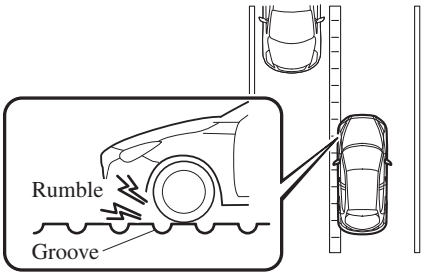

Blind Spot Monitoring (BSM) System*

The Blind Spot Monitoring (BSM) system is designed to assist the driver in checking the area to the rear of the vehicle on both sides during lane changes by alerting the driver to the presence of vehicles approaching from the rear in an adjacent lane.
The Blind Spot Monitoring (BSM) system detects vehicles approaching from the rear while travelling in the forward direction at a speed of 30 km/h (19 mph) or faster and turns on the Blind Spot Monitoring (BSM) warning lights equipped on the door mirrors depending on the conditions. If the direction indicator lever is operated to signal a lane change in the direction in which the Blind Spot Monitoring (BSM) warning light is illuminated, the system warns the driver of a vehicle in the detection area by flashing the Blind Spot Monitoring (BSM) warning light and activating a beep sound.
The detection area on this system covers the driving lanes on both sides of the vehicle and from the rear part of the front doors to about 50 m (164 ft) behind the vehicle.

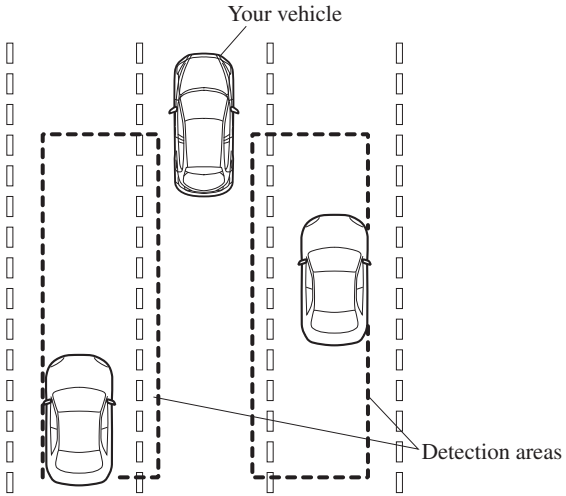

⚠ *WARNING*

Always check the surrounding area visually before making an actual lane change:
The system is only designed to assist you in checking for vehicles at your rear when making a lane change. Due to certain limitations with the operation of this system, the Blind Spot Monitoring (BSM) warning light may not flash or it might be delayed even though a vehicle is in an adjacent driving lane. Always make it your responsibility as a driver to check the rear.

*Some models.

NOTE

- The Blind Spot Monitoring (BSM) system will operate when all of the following conditions are met:
  - The ignition is switched ON.
  - The Blind Spot Monitoring (BSM) switch is pressed and the Blind Spot Monitoring (BSM) OFF indicator light in the instrument cluster is turned off.
  - The vehicle speed is about 30 km/h (19 mph) or faster.
- The Blind Spot Monitoring (BSM) system will not operate under the following circumstances.
  - The vehicle speed falls below about 25 km/h (15 mph) even though the Blind Spot Monitoring (BSM) OFF indicator light is turned off.
  - The shift lever (manual transaxle)/selector lever (automatic transaxle) is shifted to reverse (R) and the vehicle is reversing.
- In the following cases, the Blind Spot Monitoring (BSM) OFF indicator light turns on and operation of the system is stopped. If the Blind Spot Monitoring (BSM) OFF indicator light remains illuminated, have the vehicle inspected at an Authorised Mazda Dealer as soon as possible.
  - Some problem with the system including the Blind Spot Monitoring (BSM) warning lights is detected.
  - A large deviation in the installation position of a radar sensor (rear) on the vehicle has occurred.
  - There is a large accumulation of snow or ice on the rear bumper near a radar sensor (rear). Remove any snow, ice or mud on the rear bumper.
  - Driving on snow-covered roads for long periods.
  - The temperature near the radar sensors (rear) becomes extremely hot due to driving for long periods on slopes during the summer.
  - The battery voltage has decreased.
- Under the following conditions, the radar sensors (rear) cannot detect target objects or it may be difficult to detect them.
  - A vehicle is in the detection area at the rear in an adjacent driving lane but it does not approach. The Blind Spot Monitoring (BSM) system determines the condition based on radar detection data.
  - A vehicle is travelling alongside your vehicle at nearly the same speed for an extended period of time.
  - Vehicles approaching in the opposite direction.
  - A vehicle in an adjacent driving lane is attempting to pass your vehicle.
  - A vehicle is in an adjacent lane on a road with extremely wide driving lanes. The detection area of the radar sensors (rear) is set at the road width of expressways.

NOTE

- In the following cases, the activation of the Blind Spot Monitoring (BSM) warning lights and the warning beep may not occur or they may be delayed.
  - A vehicle makes a lane change from a driving lane two lanes over to an adjacent lane.
  - Driving on steep slopes.
  - Crossing the summit of a hill or mountain pass.
  - The turning radius is small (making a sharp turn, turning at intersections).
  - When there is a difference in the height between your driving lane and the adjacent lane.
  - Directly after pressing the Blind Spot Monitoring (BSM) switch and the system becomes operable.
- If the road width is extremely narrow, vehicles two lanes over may be detected. The detection area of the radar sensors (rear) is set according to the road width of expressways.
- The Blind Spot Monitoring (BSM) warning lights may turn on in reaction to stationary objects on the road or the roadside such as guardrails, tunnels, sidewalls, and parked vehicles.

Objects such as guardrails and concrete walls running alongside the vehicle.

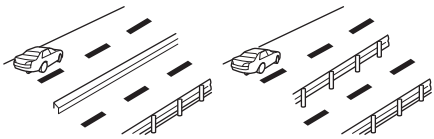

Places where the width between guardrails or walls on each side of the vehicle narrows.

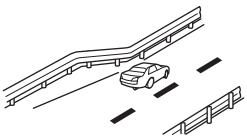

The walls at the entrance and exits of tunnels, turnouts.

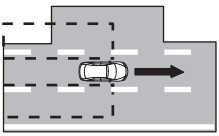

- A Blind Spot Monitoring (BSM) warning light may flash or the warning beep may be activated several times when making a turn at a city intersection.
- Turn off the Blind Spot Monitoring (BSM) system while pulling a trailer or while an accessory such as a bicycle carrier is installed to the rear of the vehicle. Otherwise, the radar’s radio waves will be blocked causing the system to not operate normally.

NOTE

- In the following cases, it may be difficult to view the illumination/flashing of the Blind Spot Monitoring (BSM) warning lights equipped on the door mirrors.
  - Snow or ice is adhering to the door mirrors.
  - The front door glass is fogged or covered in snow, frost or dirt.
- The system switches to the Rear Cross Traffic Alert function when the shift lever (manual transaxle) or the selector lever (automatic transaxle) is shifted to the reverse (R) position.
  Refer to Rear Cross Traffic Alert (RCTA) on page 4-118.

▼Blind Spot Monitoring (BSM) Warning Lights/Blind Spot Monitoring (BSM) Warning Beep

The Blind Spot Monitoring (BSM) or Rear Cross Traffic Alert (RCTA) system notifies the driver of the presence of vehicles in adjacent lanes to the rear of your vehicle using the Blind Spot Monitoring (BSM) warning lights and the warning beep while the systems are operational.

Blind Spot Monitoring (BSM) warning lights

The Blind Spot Monitoring (BSM) warning lights are equipped on the left and right door mirrors. The warning lights turn on when a vehicle approaching from the rear in an adjacent lane is detected.

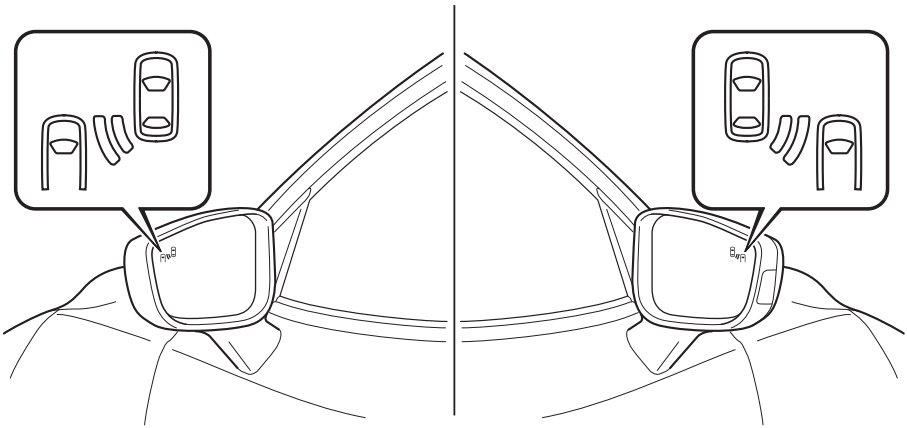

When the ignition is switched ON, the malfunction warning light turns on momentarily and then turns off after a few seconds.

Forward driving (Blind Spot Monitoring (BSM) system operation)

The Blind Spot Monitoring (BSM) system detects vehicles approaching from the rear and turns on the Blind Spot Monitoring (BSM) warning lights equipped on the door mirrors according to the conditions. Additionally, while a Blind Spot Monitoring (BSM) warning light is illuminated, if the direction indicator lever is operated to signal a turn in the direction in which the Blind Spot Monitoring (BSM) warning light is illuminated, the Blind Spot Monitoring (BSM) warning light flashes.

Reverse driving (Rear Cross Traffic Alert (RCTA) system operation)

The Rear Cross Traffic Alert (RCTA) system detects vehicles approaching from the left and right of your vehicle and flashes the Blind Spot Monitoring (BSM) warning lights.

Function for cancelling illumination dimmer

When the headlight switch is in the ≣D or ≣D position, the brightness of the Blind Spot Monitoring (BSM) warning lights is dimmed.
If the Blind Spot Monitoring (BSM) warning lights are difficult to see due to glare from surrounding brightness when travelling on snow-covered roads or under foggy conditions, press the dimmer cancellation button to cancel the dimmer and increase the brightness of Blind Spot Monitoring (BSM) warning lights when they turn on.
Refer to Instrument Panel Illumination on page 4-32.

Blind Spot Monitoring (BSM) warning beep

The Blind Spot Monitoring (BSM) warning beep is activated simultaneously with the flashing of a Blind Spot Monitoring (BSM) warning light.

▼Blind Spot Monitoring (BSM) OFF Indicator Light

- When the ignition is switched ON, the malfunction warning light turns on momentarily and then turns off after a few seconds.
- The Blind Spot Monitoring (BSM) OFF indicator light illuminates when the Blind Spot Monitoring (BSM) switch is pressed to turn off the Blind Spot Monitoring (BSM) and Rear Cross Traffic Alert (RCTA) systems.
- A malfunction in the system may be indicated under the following conditions. Have your vehicle inspected at an Authorised Mazda Dealer.
  - The light does not turn on when the ignition is switched ON.
  - The light remains turned on even if the Blind Spot Monitoring (BSM) switch is operated.
  - It turns on while driving the vehicle.

▼Blind Spot Monitoring (BSM) Switch

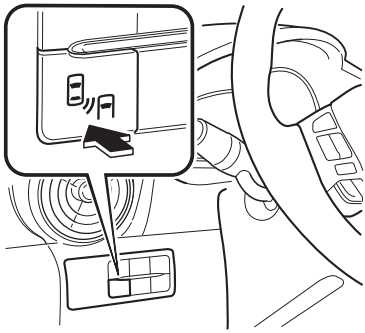

When the Blind Spot Monitoring (BSM) switch is pressed, the Blind Spot Monitoring (BSM) and Rear Cross Traffic Alert (RCTA) systems are turned off and the Blind Spot Monitoring (BSM) OFF indicator light in the instrument cluster turns on.
If the switch is pressed again, the Blind Spot Monitoring (BSM) and Rear Cross Traffic Alert (RCTA) systems become operable and the Blind Spot Monitoring (BSM) OFF indicator light turns off.

NOTE

- When the ignition is switched off, the condition before the system was turned off is maintained.
  For example, if the ignition is switched OFF while the Blind Spot Monitoring (BSM) and Rear Cross Traffic Alert (RCTA) systems are operational, the Blind Spot Monitoring (BSM) and Rear Cross Traffic Alert (RCTA) systems remain operational the next time the ignition is switched ON.
- The Blind Spot Monitoring (BSM) and Rear Cross Traffic Alert (RCTA) systems are turned off when the battery is disconnected such as when the battery terminals or fuses have been removed and re-installed.
  To turn the Blind Spot Monitoring (BSM) and Rear Cross Traffic Alert (RCTA) systems back on, press the Blind Spot Monitoring (BSM) switch.

Rear Cross Traffic Alert (RCTA)*

The Rear Cross Traffic Alert (RCTA) system is designed to assist the driver in checking the area to the rear of the vehicle on both sides while the vehicle is reversing by alerting the driver to the presence of vehicles approaching the rear of the vehicle.
The Rear Cross Traffic Alert (RCTA) system detects vehicles approaching from the left and right sides of the vehicle while the vehicle is being reversed out of a parking space, and notifies the driver of possible danger using the Blind Spot Monitoring (BSM) warning lights and the warning buzzer.

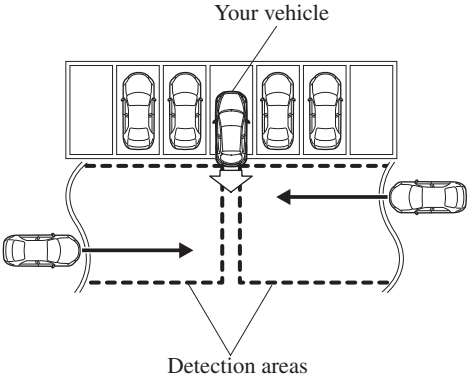

Rear Cross Traffic Alert (RCTA) operation

1. The Rear Cross Traffic Alert (RCTA) system operates when the shift lever (manual transaxle) or the selector lever (automatic transaxle) is shifted to the reverse (R) position.
2. If there is the possibility of a collision with an approaching vehicle, the Blind Spot Monitoring (BSM) warning light flashes and the warning beep is activated simultaneously.

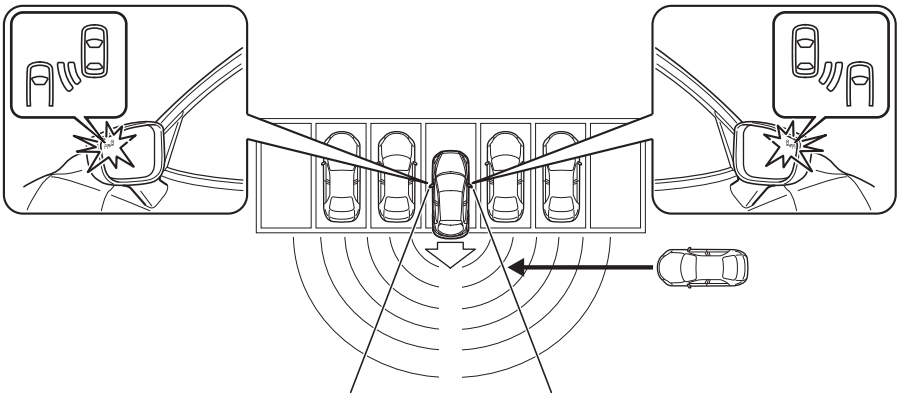

 *Some models.

⚠ *WARNING*

Always check the surrounding area visually before actually putting the vehicle in reverse:
The system is only designed to assist you in checking for vehicles at the rear when putting the vehicle in reverse. Due to certain limitations with the operation of this system, the Blind Spot Monitoring (BSM) warning light may not flash or it might be delayed even though a vehicle is behind your vehicle. Always make it your responsibility as a driver to check the rear.

NOTE

- In the following cases, the Blind Spot Monitoring (BSM) OFF indicator light turns on and operation of the system is stopped. If the Blind Spot Monitoring (BSM) OFF indicator light remains illuminated, have the vehicle inspected at an Authorised Mazda Dealer as soon as possible.
  - Some problem with the system including the Blind Spot Monitoring (BSM) warning lights has occurred.
  - A large deviation in the installation position of a radar sensor (rear) on the vehicle has occurred.
  - There is a large accumulation of snow or ice on the rear bumper near a radar sensor (rear).
  - Driving on snow-covered roads for long periods.
  - The temperature near the radar sensors becomes extremely hot due to driving for long periods on slopes during the summer.
  - The battery voltage has decreased.

NOTE

- Under the following conditions, the radar sensors (rear) cannot detect target objects or it may be difficult to detect them.
  - The vehicle speed when reversing is about 10 km/h (6 mph) or faster.
  - The radar sensor (rear) detection area is obstructed by a nearby wall or parked vehicle. (Reverse the vehicle to a position where the radar sensor detection area is no longer obstructed.)

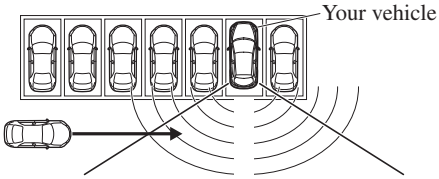

  - A vehicle is approaching directly from the rear of your vehicle.

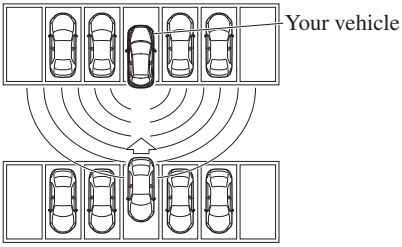

  - The vehicle is parked on a slant.

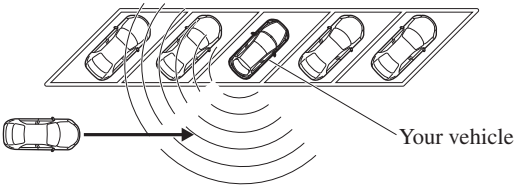

  - Directly after pressing the Blind Spot Monitoring (BSM) switch and the system becomes operable.
- In the following cases, it may be difficult to view the illumination/flashing of the Blind Spot Monitoring (BSM) warning lights equipped on the door mirrors.
  - Snow or ice adheres to the door mirrors.
  - The front door glass is fogged or covered in snow, frost or dirt.
- Turn off the Rear Cross Traffic Alert (RCTA) system while pulling a trailer or while an accessory such as a bicycle carrier is installed to the rear of the vehicle. Otherwise, the radio waves emitted by the radar will be blocked causing the system to not operate normally.

Adjustable Speed Limiter*

The adjustable speed limiter is a function to prevent the vehicle from being driven at a vehicle speed faster than a set speed. The vehicle speed is controlled to kept it below the set speed even if the accelerator pedal is depressed.
The adjustable speed limiter can be set between 30 km/h (20 mph) and 200 km/h (125 mph). The vehicle speed may exceed the set speed when the vehicle is driven on a down slope, however, the system notifies the driver by flashing the display and operating a warning sound.

⚠ *WARNING*

Always turn off the system when changing drivers:
If the driver is changed and the new driver is unaware of the adjustable speed limiter function, the vehicle may not accelerate when the driver depresses the accelerator pedal, leading to an accident.

The system consists of the adjustable speed limiter display and the speed limiter switch on the steering wheel.

Active Driving Display

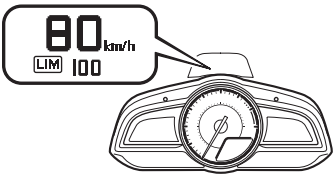

Display in the instrument cluster

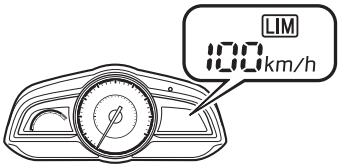

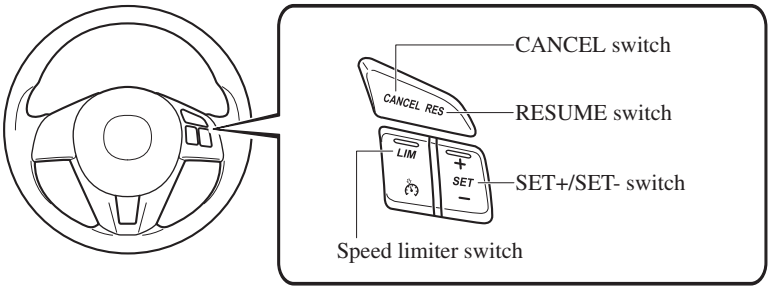

*Some models.

▼Adjustable Speed Limiter Display

The setting status of the adjustable speed limiter is displayed in the active driving display or the display in the instrument cluster.

Stand-by display

Displays when the speed limiter switch is operated and the system is turned on.
Turns off when the system is turned off.

Active Driving Display

Display in the instrument cluster

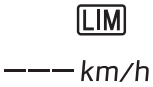

Setting display

Displays when the SET+/SET− switch is operated and the speed is set.

Active Driving Display

Display in the instrument cluster

Cancel display

Displays when any of the following operations is done and the system is temporarily cancelled.

- Cancel switch is operated
- Accelerator pedal is strongly depressed

Active Driving Display

Display in the instrument cluster

▼Adjustable Speed Limiter Main Indicator Light (Amber)/Adjustable Speed Limiter Set Indicator Light (Green)

The indicator light has two colours.

Adjustable speed limiter main indicator light (amber)

The indicator light illuminates amber when the speed limiter switch is pressed and the adjustable speed limiter is activated.

Adjustable speed limiter set indicator light (green)

The indicator light illuminates green when a speed has been set.

▼Speed Limiter Warning Beep

If the vehicle speed exceeds the set speed by about 3 km/h (2 mph) or more, a warning sound operates continuously and the adjustable speed limiter display flashes at the same time. The warning sound operates and the display flashes until the vehicle speed decreases to the set speed or less.
Verify the safety of the surrounding area and adjust the vehicle speed by applying the brakes. Additionally, keep a safe distance from the vehicles behind you.

Active Driving Display

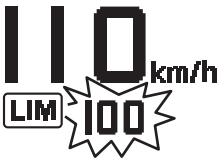

Display in the instrument cluster

⚠ CAUTION

If the set speed is set lower than the current vehicle speed by pressing the SET − or RESUME switch, the warning beep is not activated for about 30 seconds even if the vehicle speed is faster than the newly set speed by 3 km/h (2 mph). Be careful not to drive over the set speed.

NOTE
When the system is temporarily cancelled by depressing the accelerator pedal fully, the adjustable speed limiter display shows the cancel display. If the vehicle speed exceeds the set speed by about 3 km/h (2 mph) or more while the cancel display is displayed, the set speed display flashes but the warning sound is not operated.

▼Turning the System On/Off

Press the speed limiter switch to turn the system on. The adjustable speed limiter display is displayed.
To turn the system off, press the speed limiter switch while the adjustable speed limiter is displayed. The adjustable speed limiter display turns off.

▼Setting the System

⚠ *WARNING*
Always verify the safety of the surrounding area when setting the adjustable speed limiter: ***If the speed is set lower than the current vehicle speed, the vehicle speed is decreased to the set speed. Verify the safety of the surrounding area and keep a safe distance between vehicles ahead and behind you.***

1. Press the speed limiter switch to turn the system on.
2. Press the SET + or SET − to set the speed. When the current vehicle speed is 30 km/h (20 mph) or more, the speed is set to the current vehicle speed. When the current vehicle speed is less than 30 km/h (20 mph), the speed is set to 30 km/h (20 mph).
3. To increase the set speed, press the SET + switch continuously. The set speed can be adjusted in 10 km/h (5 mph) increments. The set speed can also be adjusted in about 1 km/h (1 mph) increments by pressing the SET + switch momentary. For example, the set speed increases about 4 km/h (4 mph) by pressing the SET + switch 4 times.
4. To decrease the set speed, press the SET − switch continuously. The set speed can be adjusted in 10 km/h (5 mph) decrements. The set speed can also be adjusted in about 1 km/h (1 mph) increments by pressing the SET − switch momentary. For example, the set speed decreases about 4 km/h (4 mph) by pressing the SET − switch 4 times.

NOTE
The system does not operate when the cruise control is on. The system is temporarily cancelled when the vehicle is accelerated by depressing the accelerator pedal strongly, however, it resumes when the vehicle speed decreases to the set speed or less. The vehicle speed may exceed the set speed on a down slope.

▼Temporarily Cancelling the System

The system is temporarily cancelled (stand-by status) when any of the following operations is done while the adjustable speed limiter is displayed.

- CANCEL switch is pressed
- Accelerator pedal is strongly depressed

Press the RESUME switch to resume the operation at the previous set speed. The adjustable speed limiter display remains displayed.

NOTE
The set speed can be set by pressing the SET+ or SET− switch while the system is in stand-by status. The adjustable speed limiter is not cancelled by depressing the brake pedal.

Smart City Brake Support (SCBS)*

The Smart City Brake Support (SCBS) system is designed to reduce damage in the event of a collision by operating the brake control (SCBS brake) when the system's laser sensor detects a vehicle ahead and determines that a collision with a vehicle ahead is unavoidable. It may also be possible to avoid a collision if the relative speed between your vehicle and a vehicle ahead is less than about 20 km/h (12 mph).
In addition, when the driver depresses the brake pedal while the system is in the operation range at about 4 to 30 km/h (2 to 18 mph), the brakes are applied firmly and quickly to assist. (Brake Assist (SCBS brake assist))

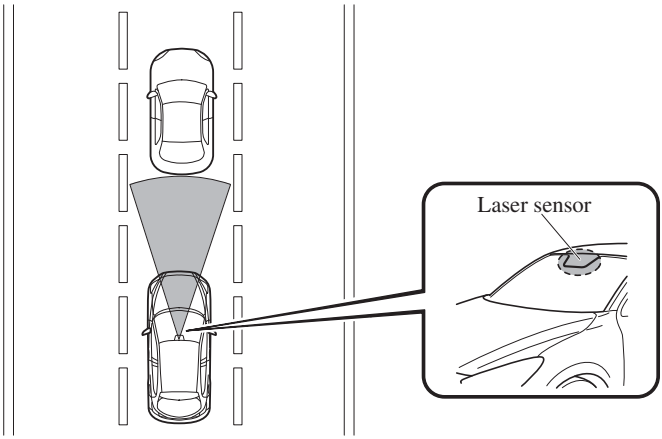

 *Some models.

⚠ *WARNING*

Do not rely on the Smart City Brake Support System (SCBS) as a substitute for safer driving:
The Smart City Brake Support (SCBS) system cannot compensate for unsafe and reckless driving, excessive speed, tailgating (following another vehicle too closely), and driving on slippery roads such as wet, snowy, and icy roads (reduced tyre friction and road contact because of water on the road surface). You can still have an accident.

Do not rely completely on the Smart City Brake Support (SCBS) system:

- ***The Smart City Brake Support (SCBS) system is only designed to reduce damage in the event of a collision. Over reliance on the system leading to the accelerator pedal or brake pedal being mistakenly operated could result in an accident.***
- ***The Smart City Brake Support (SCBS) is a system which operates in response to a vehicle ahead. The system may not be able to detect or react to two-wheeled vehicles or pedestrians.***
- ***The laser sensor for the Smart City Brake Support (SCBS) system is installed near the rearview mirror. To assure the correct operation of the Smart City Brake Support (SCBS), heed the following cautions.***
  - ***Do not apply stickers to the surface of the windscreen near the laser sensor (including transparent stickers). Otherwise, the laser sensor may not be able to detect vehicles ahead which could result in an accident.***
  - ***Do not apply coating agent to the windscreen. Otherwise, the laser sensor may not be able to detect vehicles or obstructions in front which could result in an accident.***
  - ***Do not disassemble the laser sensor.***
  - ***If cracks or damage caused by flying gravel or debris is visible near the laser sensor, stop using the Smart City Brake Support (SCBS) system immediately and have your vehicle inspected by an expert repairer, we recommend an Authorised Mazda Repairer. If the vehicle continues to be driven with cracks or scratch marks left on the windscreen near the laser sensor, the system may operate unnecessarily and cause an unexpected accident.***
    Refer to Stopping The Smart City Brake Support (SCBS) System Operation on page 4-130.
  - ***When replacing the windscreen wipers or windscreen, consult an expert repairer, we recommend an Authorised Mazda Repairer.***

Do not modify the suspension:
If the vehicle height or inclination is changed, the system will not be able to correctly detect vehicles ahead. This will result in the Smart City Brake Support (SCBS) system not operating normally or mistakenly operating, which could cause a serious accident.

⚠ *WARNING*

Turn off the Smart City Brake Support (SCBS) when the vehicle is running on a chassis roller or being towed:
Turn off the Smart City Brake Support (SCBS) system to prevent mistaken operation when the vehicle is running on a chassis roller or being towed.
Refer to the Stopping the Smart City Brake Support (SCBS) System Operation on page 4-130 on how to turn off the Smart City Brake Support (SCBS) system.

⚠ CAUTION

- When driving off-road in areas where there is grass or forage, it is recommended that the Smart City Brake Support (SCBS) system be turned off.
- Always use tyres for all wheels that are of the specified size, and the same manufacturer, brand, and tread pattern. In addition, do not use tyres with significantly different wear patterns on the same vehicle as the Smart City Brake Support (SCBS) system may not operate normally.
- The laser sensor includes a function for detecting a soiled windscreen and informing the driver, however, depending on the conditions, it may not detect plastic shopping bags, ice or snow on the windscreen. In such cases, the system cannot accurately determine a vehicle ahead and may not be able to operate normally. Always drive carefully and pay attention to the road ahead.

NOTE

- The Smart City Brake Support (SCBS) system will not operate if the driver is deliberately performing driving operations (accelerator pedal and steering wheel).
- The Smart City Brake Support (SCBS) system will operate under the following conditions.
  - The engine is running.
  - The Smart City Brake Support (SCBS) warning light (amber) does not illuminate.
  - The vehicle speed is between about 4 to 30 km/h (2 to 18 mph).
  - The Smart City Brake Support (SCBS) system is not turned off.
  - The DSC is not malfunctioning.

NOTE

- The Smart City Brake Support (SCBS) detects a vehicle ahead by emitting a near-infrared laser beam and receiving the beam reflected off the reflector of the vehicle ahead, and then using it for the measurement. Consequently, the Smart City Brake Support (SCBS) may not operate under the following conditions:
  - Reflection of the laser is poor due to the shape of the vehicle ahead.
  - The vehicle ahead is significantly dirty.
  - Under bad weather condition, such as rain, fog and snow.
  - The window washer is being used or the windscreen wipers are not used when it's raining.
  - The windscreen is dirty.
  - The steering wheel is turned completely left or right, or the vehicle is accelerated rapidly and comes close to the vehicle ahead.
  - Trucks with low loading platforms and vehicles with an extremely low or high profile.
  - Vehicles with certain shapes such as a vehicle carrier.
- Under the following conditions, the Smart City Brake Support (SCBS) system may not operate normally.
  - Heavy luggage is loaded in the luggage compartment or on the rear seat.
  - If there is the possibility of partial contact with a vehicle ahead.
  - When driving on continuously curving roads, and entering and exiting exits.
  - Elongated luggage or cargo is loaded onto installed roof rails and covers the laser sensor.
  - Exhaust gas from the vehicle in front, sand, snow, and water vapour rising from manholes and grating, and water splashed into the air.
  - When towing a malfunctioning vehicle.
  - When driving with tyres having significantly different wear.
- In the following cases, the laser sensor may inadvertently determine that there is a vehicle ahead and the Smart City Brake Support (SCBS) system may operate.
  - Objects on the road at the entrance to a curve.
  - Vehicles passing in the opposite lane while making a curve.
  - Metal objects, bumps, or protruding objects on the road.
  - When passing through a toll gate equipped with a bar.
  - When passing under a vinyl curtain or flag.
  - Plastic objects such as pylons.
  - Two-wheeled vehicles, pedestrians, animals or standing trees.
- **(Manual transaxle)**
  If the vehicle is stopped by the SCBS operation and the clutch pedal is not depressed, the engine stops.

NOTE

- When the system operates, the user is notified by the flashing Smart City Brake Support (SCBS) indicator light (red) and the active driving display*.
- The Smart City Brake Support (SCBS) warning light (amber) turns on when the system has a malfunction.
  Refer to Warning Lights on page 4-39.

▼Smart City Brake Support (SCBS) Indicator Light (Red)

If the Smart City Brake Support (SCBS) is operating, the indicator light (red) flashes.

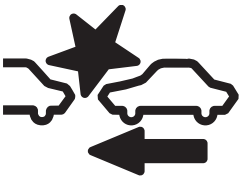

▼Automatic Brake Operation Display (Vehicles With Active Driving Display)

“SCBS Automatic Brake” is displayed in the active driving display while the SCBS brakes or the brake assist (SCBS brake assist) is operating.

SCBS
Automatic
Brake

NOTE

- The collision warning beep sounds intermittently while the SCBS brake or brake assist (SCBS brake assist) is operating.
- If the vehicle is stopped by the SCBS operation and the brake pedal is not depressed, the warning beep sounds one time after about 2 seconds and the SCBS brake is automatically released.

▼Stopping The Smart City Brake Support (SCBS) System Operation

The Smart City Brake Support (SCBS) system can be temporarily deactivated. When the Smart City Brake Support (SCBS) system is turned off, the Smart City Brake Support (SCBS) OFF indicator light turns on.

When the engine is restarted, the system becomes operational.

 *Some models.

Without SCBS OFF switch

Refer to Personalisation Features on page 9-13.

With SCBS OFF switch

Press the SCBS OFF switch to turn off the system. The Smart City Brake Support (SCBS) OFF indicator light in the instrument cluster will illuminate.

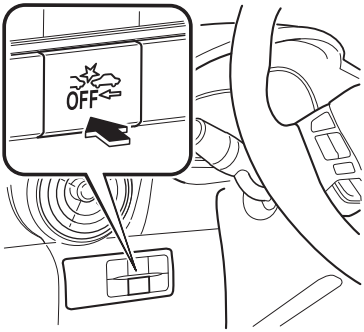

Press the switch again to turn the system back on. The Smart City Brake Support (SCBS) OFF indicator light will turn off.

Forward Sensing Camera (FSC)*

Your vehicle is equipped with a Forward Sensing Camera (FSC). The Forward Sensing Camera (FSC) is positioned near the rearview mirror and used by the following systems.

- High Beam Control System (HBC)
- Lane Departure Warning System (LDWS)

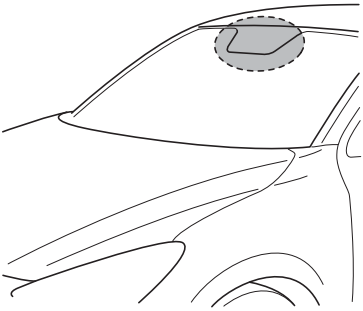

The Forward Sensing Camera (FSC) determines the conditions ahead of the vehicle while travelling at night and detects traffic lanes. The distance in which the Forward Sensing Camera (FSC) can detect objects varies depending on the surrounding conditions.

 *Some models.

⚠ CAUTION

Heed the following cautions to assure the correct operation of the Forward Sensing Camera (FSC).

- Do not remove the Forward Sensing Camera (FSC) cover.
- Do not place objects on the instrument panel which reflect light.
- Do not apply accessories, stickers or film to the windscreen near the Forward Sensing Camera (FSC). If there are objects in front of the Forward Sensing Camera (FSC) lens, even a transparent sticker, they will cause the system to not operate correctly.
- Always keep the windscreen glass around the camera clean by removing dirt or fogging. Use the windscreen defroster to remove fogging on the windscreen.
- When cleaning the windscreen, do not allow glass cleaners or similar cleaning agent to get on the Forward Sensing Camera (FSC) lens. In addition, do not touch the Forward Sensing Camera (FSC) lens.
- Consult an expert repairer, we recommend an Authorised Mazda Repairer regarding cleaning the interior side of the windscreen around the Forward Sensing Camera (FSC).
- Be careful not to scratch the Forward Sensing Camera (FSC) lens or allow it to get dirty. Also, do no take the camera apart. Otherwise, it could result in damage or malfunction.
- Consult an expert repairer, we recommend an Authorised Mazda Repairer before performing repairs around the Forward Sensing Camera (FSC).
- The Forward Sensing Camera (FSC) is installed to the windscreen. Consult an expert repairer, we recommend an Authorised Mazda Repairer for windscreen repair and replacement.
- When performing repairs around the rearview mirror, consult an expert repairer, we recommend an Authorised Mazda Repairer.
- Consult an expert repairer, we recommend an Authorised Mazda Repairer regarding cleaning of the Forward Sensing Camera (FSC) lens.
- Do not hit or apply strong force to the Forward Sensing Camera (FSC) or the area around it. If strong force is applied, stop using the Lane Departure Warning System (LDWS) and the High Beam Control System (HBC), and consult an expert repairer, we recommend an Authorised Mazda Repairer.
- The direction in which the Forward Sensing Camera (FSC) is pointed has been finely adjusted. Do not change the installation position of the Forward Sensing Camera (FSC) or remove it. Otherwise, it could result in damage or malfunction.

Laser Sensor*

The Smart City Brake Support (SCBS) laser sensor is installed at the top of the windscreen near the rearview mirror.

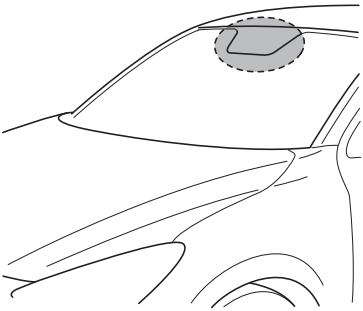

Always keep the surface of the windscreen around the laser sensor clean to assure proper operation of the Smart City Brake Support (SCBS) system.

⚠ *WARNING*

As there is the possibility of eye damage occurring from the laser, always heed the following precautions:

- ***Never remove the sensor.***
- ***A removed sensor will not meet the conditions for a class 1M laser under the IEC 60825-1 specification and therefore eye safety cannot be assured.***
- ***Do not peer into the sensor using optical instruments with a magnification function such as magnifying glasses, and microscopic and objective lenses within a distance of 100 mm (3.94 in) from the sensor.***

 *Some models.

Laser classification label:

INVISIBLE LASER RADIATION
DO NOT VIEW DIRECTLY WITH
OPTICAL INSTRUMENTS (MAGNIFIERS)
CLASS 1M LASER PRODUCT

Laser explanatory label:

Max average power: 45 mW
Pulse duration: 33 ns
Wavelength: 905 nm

IEC 60825-1:2007
Complies with FDA performance standards for laser products except for deviations pursuant to Laser Notice No. 50, dated July 26th, 2001

Laser sensor radiation data
Maximum average power: 45 mW
Pulse duration: 33 ns
Wavelength: 905 nm
Divergence angle (horizontal×vertical): 28 degrees×12 degrees

Radar Sensors (Rear)*

Your vehicle is equipped with radar sensors (rear). The following systems also use the radar sensors (rear).

- Blind Spot Monitoring system (BSM)
- Rear Cross Traffic Alert (RCTA)

The radar sensors (rear) function by detecting the radio waves reflected off a vehicle approaching from the rear or an obstruction sent from the radar sensor.

Saloon

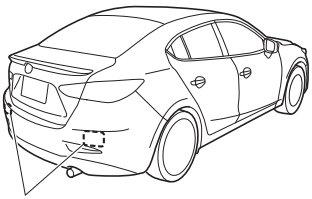

Radar sensors (rear)

Hatchback

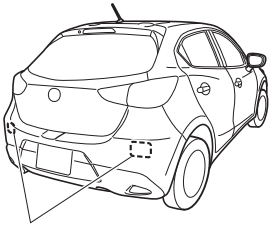

Radar sensors (rear)

The radar sensors (rear) are installed inside the rear bumper, one each on the left and right sides.
Always keep the surface of the rear bumper near the radar sensors (rear) clean so that the radar sensors (rear) operate normally. Also, do not apply items such as stickers.
Refer to Exterior Care on page 6-67.

⚠ CAUTION

If the rear bumper receives a severe impact, the system may no longer operate normally. Stop the system immediately and have the vehicle inspected at an Authorised Mazda Dealer.

 *Some models.

NOTE

- The detection ability of the radar sensors (rear) has limitations. In the following cases, the detection ability may lower and the system may not operate normally.
  - The rear bumper near the radar sensors (rear) has become deformed.
  - Snow, ice or mud adheres to the radar sensors (rear) on the rear bumper.
  - Under bad weather conditions such as rain, snow and fog.
- Under the following conditions, the radar sensors (rear) cannot detect target objects or it may be difficult to detect them.
  - Stationary objects on a road or a road side such as small, two-wheeled vehicles, bicycles, pedestrians, animals, and shopping carts.
  - Vehicle shapes which do not reflect radar waves well such as empty trailers with a low vehicle height and sports cars.
- Vehicles are shipped with the direction of the radar sensors (rear) adjusted for each vehicle to a loaded vehicle condition so that the radar sensors (rear) detect approaching vehicles correctly. If the direction of the radar sensors (rear) has deviated for some reason, have the vehicle inspected at an Authorised Mazda Dealer.
- For repairs or replacement of the radar sensors (rear), or bumper repairs, paintwork, and replacement near the radar sensors, consult an Authorised Mazda Dealer.
- Turn off the system while pulling a trailer or while an accessory such as a bicycle carrier is installed to the rear of the vehicle. Otherwise, the radio waves emitted by the radar will be blocked causing the system to not operate normally.
- The radar sensors are regulated by the relevant radio wave laws of the country in which the vehicle is driven. If the vehicle is driven abroad, authorization from the country in which the vehicle is driven may be required.

Cruise Control*

With cruise control, you can set and automatically maintain any speed of more than about 25 km/h (16 mph).

⚠ *WARNING*

Do not use the cruise control under the following conditions:
Using the cruise control under the following conditions is dangerous and could result in loss of vehicle control.

- ***Hilly terrain***
- ***Steep inclines***
- ***Heavy or unsteady traffic***
- ***Slippery or winding roads***
- ***Similar restrictions that require inconsistent speed***

▼Cruise Control Switch

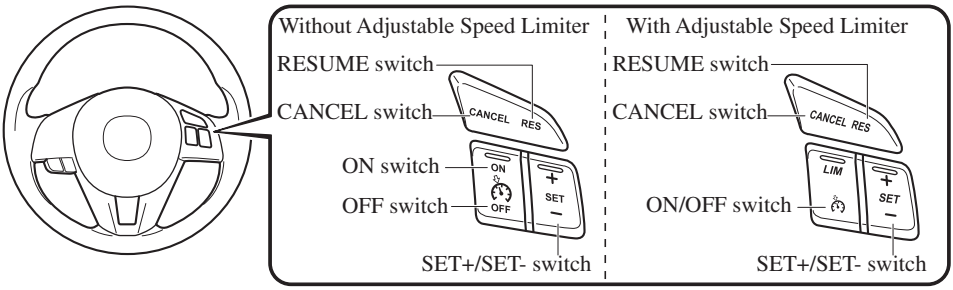

 *Some models.

▼Cruise Main Indicator Light (Amber)/Cruise Set Indicator Light (Green)

The indicator light has two colours.

Cruise Main Indicator Light (Amber)

The indicator light illuminates amber when the cruise control system is activated.

Cruise Set Indicator Light (Green)

The indicator light illuminates green when a cruising speed has been set.

▼Activation/Deactivation

With adjustable speed limiter

To activate the system, press the ON/OFF switch. The cruise main indicator light (amber) illuminates.
To deactivate the system, press the switch again.
The cruise main indicator light (amber) turns off.

Without adjustable speed limiter

To activate the system, press the ON switch. The cruise main indicator light (amber) illuminates.
To deactivate the system, press the OFF switch.
The cruise main indicator light (amber) turns off.

⚠ *WARNING*

Always turn off the cruise control system when it is not in use:
Leaving the cruise control system in an activation-ready state while the cruise control is not in use is dangerous as the cruise control could unexpectedly activate if the activation button is accidentally pressed, and result in loss of vehicle control and an accident.

NOTE

When the ignition is switched OFF, the system status before it was turned off is maintained. For example, if the ignition is switched OFF with the cruise control system operable, the system will be operable when the ignition is switched ON the next time.

▼To Set Speed

1. **(With adjustable speed limiter)**
   Activate the cruise control system by pressing the ON/OFF switch. The cruise main indicator light (Amber) illuminates.
   (Without adjustable speed limiter)
   Activate the cruise control system by pressing the ON switch. The cruise main indicator light (Amber) illuminates.
2. Accelerate to the desired speed, which must be more than 25 km/h (16 mph).

3. Set the cruise control by pressing the

   SET + or SET − switch at the desired speed. The cruise control is set at the moment the SET + or SET − switch is pressed. Release the accelerator pedal simultaneously. The cruise set indicator light (Green) illuminates.

NOTE

- The cruise control speed setting cannot be performed under the following conditions:
  - **(Automatic transaxle)**
    The selector lever is in the P or N position.
  - **(Manual transaxle)**
    The shift lever is in the neutral position.
  - The parking brake is applied.
  - **(Vehicles with adjustable speed limiter)**
    The ON/OFF switch for the adjustable speed limiter is pressed.
- Release the SET + or SET − switch at the desired speed, otherwise the speed will continue increasing while the SET + switch is pressed and held, and continue decreasing while the SET − switch is pressed and held (except when the accelerator pedal is depressed).
- On a steep grade, the vehicle may momentarily slow down while ascending, or speed up while descending.

NOTE

- Cruise control will cancel if the vehicle speed decreases below 21 km/h (13 mph) when cruise is activated, such as when climbing a steep grade.
- Cruise control may cancel at about 15 km/h (9 mph) below the preset speed (such as may happen when climbing a long, steep grade).

▼To Increase Cruising Speed

Follow either of these procedures.

To increase speed using cruise control switch

Press the SET + switch and hold it. Your vehicle will accelerate. Release the switch at the speed you want.

Press the SET + switch and release it immediately to adjust the preset speed. Multiple operations will increase the preset speed according to the number of times it is operated.

Increasing speed with a single SET + switch operation

Meter display for vehicle speed indicated in km/h: 1 km/h (0.6 mph)
Meter display for vehicle speed indicated in mph: 1 mph (1.6 km/h)

To increase speed using accelerator pedal

Depress the accelerator pedal to accelerate

to the desired speed. Press the SET + or SET − switch and release it immediately.

NOTE
Accelerate if you want to speed up temporarily when the cruise control is on. Greater speed will not interfere with or change the set speed. Take your foot off the accelerator to return to the set speed.

▼To Decrease Cruising Speed

Press the SET − switch and hold it. The vehicle will gradually slow.
Release the switch at the speed you want.

Press the SET − switch and release it immediately to adjust the preset speed. Multiple operations will decrease the preset speed according to the number of times it is operated.

Decreasing speed with a single SET − switch operation

Meter display for vehicle speed indicated in km/h: 1 km/h (0.6 mph)
Meter display for vehicle speed indicated in mph: 1 mph (1.6 km/h)

▼To Resume Cruising Speed at More Than 25 km/h (16 mph)

If some other method besides the OFF switch was used to cancel cruising speed (such as applying the brake pedal) and the system is still activated, the most recent set speed will automatically resume when the RESUME switch is pressed.
If vehicle speed is below 25 km/h (16 mph), increase the vehicle speed up to 25 km/h (16 mph) or more and press the RESUME switch.

▼To Temporarily Cancel

To temporarily cancel the system, use one of these methods:

- Slightly depress the brake pedal.
- **(Manual transaxle)**
  Depress the clutch pedal.
- Press the CANCEL switch.

If the RESUME switch is pressed when the vehicle speed is 25 km/h (16 mph) or higher, the system reverts to the previously set speed.

NOTE

- If any of the following conditions occur, the cruise control system is temporarily cancelled.
  - The parking brake is applied.
  - **(Vehicles with adjustable speed limiter)**
    The ON/OFF switch for the adjustable speed limiter is pressed.
  - **(Automatic transaxle)**
    The selector lever is in the P or N position.
  - **(Manual transaxle)**
    The shift lever is in the neutral position.
- When the cruise control system is temporarily cancelled by even one of the applicable cancel conditions, the speed cannot be re-set.
- **(Automatic transaxle)**
  The cruise control cannot be cancelled while driving in manual mode (selector lever shifted from D to M position). Therefore, engine braking will not be applied even if the transaxle is shifted down to a lower gear. If deceleration is required, lower the set speed or depress the brake pedal.

▼To Deactivate

With adjustable speed limiter

To deactivate the system, press the ON/OFF switch.

Without adjustable speed limiter

To deactivate the system, press the OFF switch.

Tyre Pressure Monitoring System*

The Tyre Pressure Monitoring System (TPMS) monitors the air pressure of all four tyres. If the air pressure of one or more tyres is too low, the system warns the driver by indicating the tyre pressure monitoring system warning light in the instrument cluster and operating a beep sound. The system monitors the tyre pressures indirectly using the data sent from the ABS wheel speed sensors.
To allow the system to operate correctly, the system needs to be initialized with the specified tyre pressure (value on the tyre pressure label). Follow the procedure and perform the initialization.
Refer to Tyre Pressure Monitoring System Initialization on page 4-146.
The warning light flashes when the system has a malfunction.
Refer to Warning Lights on page 4-39.

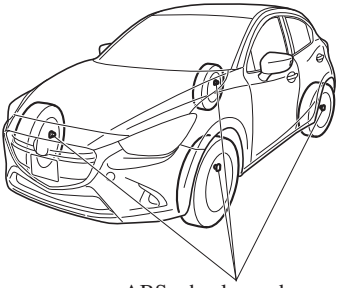

*Some models.

⚠ CAUTION

- Each tyre, including the spare (if provided), should be checked monthly when cold and inflated to the inflation pressure recommended by the vehicle manufacturer on the vehicle placard or tyre inflation pressure label. (If your vehicle has tyres of a different size than the size indicated on the vehicle placard or tyre inflation pressure label, you should determine the proper tyre inflation pressure for those tyres.)
  As an added safety feature, your vehicle has been equipped with a tyre pressure monitoring system (TPMS) that illuminates a low tyre pressure telltale when one or more of your tyres is significantly under-inflated. Accordingly, when the low tyre pressure telltale illuminates, you should stop and check your tyres as soon as possible, and inflate them to the proper pressure. Driving on a significantly under-inflated tyre causes the tyre to overheat and can lead to tyre failure. Under-inflation also reduces fuel efficiency and tyre tread life, and may affect the vehicle's handling and stopping ability.
  Please note that the TPMS is not a substitute for proper tyre maintenance, and it is the driver's responsibility to maintain correct tyre pressure, even if under-inflation has not reached the level to trigger illumination of the TPMS low tyre pressure telltale.
  Your vehicle has also been equipped with a TPMS malfunction indicator to indicate when the system is not operating properly.
  The TPMS malfunction indicator is combined with the low tyre pressure telltale. When the system detects a malfunction, the telltale will flash for approximately one minute and then remain continuously illuminated. This sequence will continue upon subsequent vehicle start-ups as long as the malfunction exists. When the malfunction indicator is illuminated, the system may not be able to detect or signal low tyre pressure as intended. TPMS malfunctions may occur for a variety of reasons, including the installation of replacement or alternate tyres or wheels on the vehicle that prevent the TPMS from functioning properly. Always check the TPMS malfunction telltale after replacing one or more tyres or wheels on your vehicle to ensure that the replacement or alternate tyres and wheels allow the TPMS to continue to function properly.
- To avoid false readings, the system samples for a little while before indicating a problem. As a result it will not instantaneously register a rapid tyre deflation or blow out.

NOTE

Because this system detects slight changes in tyre conditions, the timing of the warning may be faster or slower in the following cases:

- The size, manufacturer, or the type of tyres is different from the specification.
- The size, manufacturer, or the type of a tyre is different from the others, or the level of tyre wear is excessively different between them.
- A run-flat tyre, studless tyre, snow tyre, or tyre chains are used.
- An emergency tyre is used (The tyre pressure monitoring system warning light may flash and then continue illuminating).
- A tyre is repaired using the emergency flat tyre repair kit.
- The tyre pressure is excessively higher than the specified pressure, or the tyre pressure is suddenly lowered for some reason such as a tyre burst during driving.
- The vehicle speed is lower than about 15 km/h (9.3 mph) (including when the vehicle is stopped), or the drive period is shorter than 5 minutes.
- The vehicle is driven on an extremely rough road or a slippery, icy road.
- Hard steering and rapid acceleration/deceleration are repeated such as during aggressive driving on a winding road.
- Load on the vehicle is applied to a tyre such as by loading heavy luggage to one side of the vehicle.
- System initialization has not been implemented with the specified tyre pressure.

▼Tyre Pressure Monitoring System Initialization

In the following cases, system initialization must be performed so that the system operates normally.

- A tyre pressure is adjusted.
- Tyre rotation is performed.
- A tyre or wheel is replaced.
- The battery is replaced or completely drained.
- The tyre pressure monitoring system warning light is illuminated.

Initialization method

1. Park the car in a safe place and firmly apply the parking brake.
2. Let the tyres cool, then adjust the tyre pressure of all four (4) tyres to the specified pressure indicated on the tyre pressure label located on the driver's door frame (door open).
   Refer to Tyres on page 9-10.
3. Switch the ignition ON.
4. Press and hold the tyre pressure monitoring system set switch and verify that the tyre pressure monitoring system warning light in the instrument cluster flashes twice and a beep sound is heard once.

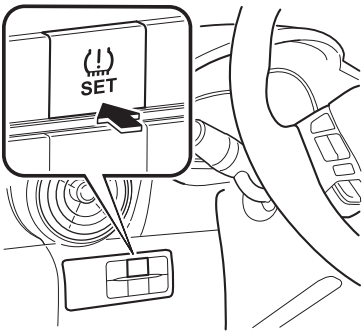

⚠ CAUTION

If the system initialization is performed without adjusting the tyre pressure, the system cannot detect the normal tyre pressure and it may not illuminate the tyre pressure monitoring system warning light even if a tyre pressure is low, or it may illuminate the light even if the pressures are normal.
Adjust the tyre pressure on all four tyres and initialize the system when the warning light is turned on. If the warning light turns on for a reason other than a flat tyre, the tyre pressure of all four tyres may have decreased naturally. The system initialization will not be performed if the switch is pressed while the vehicle is being driven.

Diesel Particulate Filter (SKYACTIV-D 1.5)

The diesel particulate filter collects and removes most of the particulate matter (PM) in the exhaust gas of a diesel engine. PM collected by the diesel particulate filter is cleared during normal driving, however, PM may not be removed and the diesel particulate filter indicator light may illuminate under the following conditions:

- If the vehicle is driven at 15 km/h (9 mph) or less continuously.
- If the vehicle is repeatedly driven for a short period of time (10 minute or less) or driven while the engine is cold.
- If the vehicle is idled for a long time.

NOTE

The engine sound and exhaust gas smell may change when PM is being removed while driving.

Diesel Particulate Filter Indicator Light

DPF

When illuminated

The particulate matter (PM) cannot be removed automatically and the amount of collected PM reaches a specified amount. After the engine has sufficiently warmed up (engine coolant temperature of 80 °C or more), depress the accelerator pedal and drive the vehicle at a speed of 20 km/h or more for about 15 to 20 minutes to eliminate the PM.

When flashing

Contact an expert repairer, we recommend an Authorised Mazda Repairer.

⚠ CAUTION

If the vehicle is continually driven as usual with the diesel particulate filter indicator light illuminated, PM increases and the indicator light may start flashing. If the diesel particulate filter indicator light starts flashing, have the vehicle inspected immediately at an expert repairer, we recommend an Authorised Mazda Repairer. If the vehicle is not inspected and continues to be driven, the engine may malfunction.

NOTE

When the diesel particulate filter indicator light flashes, the engine output is restricted to protect the diesel particulate filter.

Rear View Monitor*

The rear view monitor provides visual images of the rear of the vehicle when reversing.

⚠ *WARNING*

Always drive carefully confirming the safety of the rear and the surrounding conditions by looking directly with your eyes:
Reversing the vehicle by only looking at the screen is dangerous as it may cause an accident or a collision with an object. The rear view monitor is only a visual assist device when reversing the vehicle. The images on the screen may be different from the actual conditions.

⚠ CAUTION

- Do not use the rear view monitor under the following conditions: Using the rear view monitor under the following conditions is dangerous and could result in injury or vehicle damage or both.
  - Icy or snow-covered roads.
  - Tyre chains or a temporary spare tyre is installed.
  - The liftgate/boot lid is not fully closed.
  - The vehicle is on a road incline.
- When the display is cold, images may course across the monitor or the screen and may be dimmer than usual, which could cause difficulty in confirming the surrounding conditions of the vehicle. Always drive carefully confirming the safety of the rear and the surrounding conditions by looking directly with your eyes.
- Do not apply excessive force to the camera. The camera position and angle may deviate.
- Do not disassemble, modify, or remove it as it may no longer be waterproof.
- The camera cover is made of plastic. Do not apply degreasing agents, organic solvents, wax, or glass coating agents to the camera cover. If any are spilled on the cover, wipe off with a soft cloth immediately.
- Do not rub the camera cover forcefully with an abrasive or hard brush. The camera cover or lens may be scratched which might affect the images.

 *Some models.

NOTE

- If water, snow, or mud is stuck on the camera lens, wipe it off using a soft cloth. If it cannot be wiped off, use a mild detergent.
- If the camera temperature changes rapidly (Hot to cold, cold to hot), the rear view monitor may not operate correctly.
- When replacing the tyres, consult an expert repairer, we recommend an Authorised Mazda Repairer. Replacing the tyres could result in deviation of the guide lines which appear on the display.
- If the vehicle's front, side, or rear has been involved in a collision, the alignment of the rear view parking camera (location, installation angle) may have deviated. Always consult an expert repairer, we recommend an Authorised Mazda Repairer to have the vehicle inspected.
- If “No Video Signal Available” is indicated in the display, there could be a problem with the camera. Have your vehicle inspected at an expert repairer, we recommend an Authorised Mazda Repairer.

▼Rear View Parking Camera Location

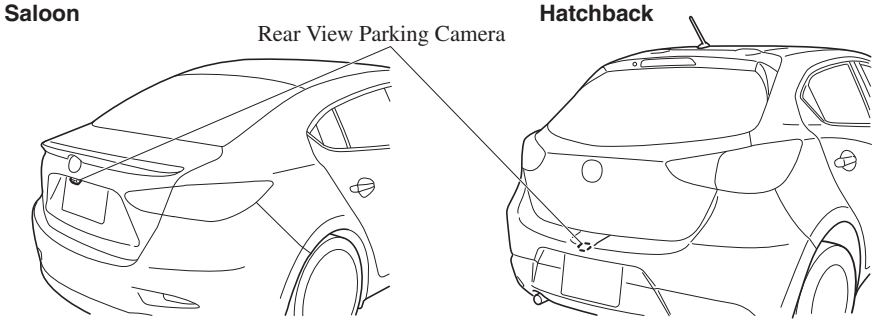

▼Switching to the Rear View Monitor Display

Shift the shift lever to R with the ignition switched ON to switch the display to the rear view monitor display.

NOTE

When the shift lever is shifted from R to another shift lever position, the screen returns to the previous display.

▼Displayable Range on the Screen

The images on the screen may be different from the actual conditions.

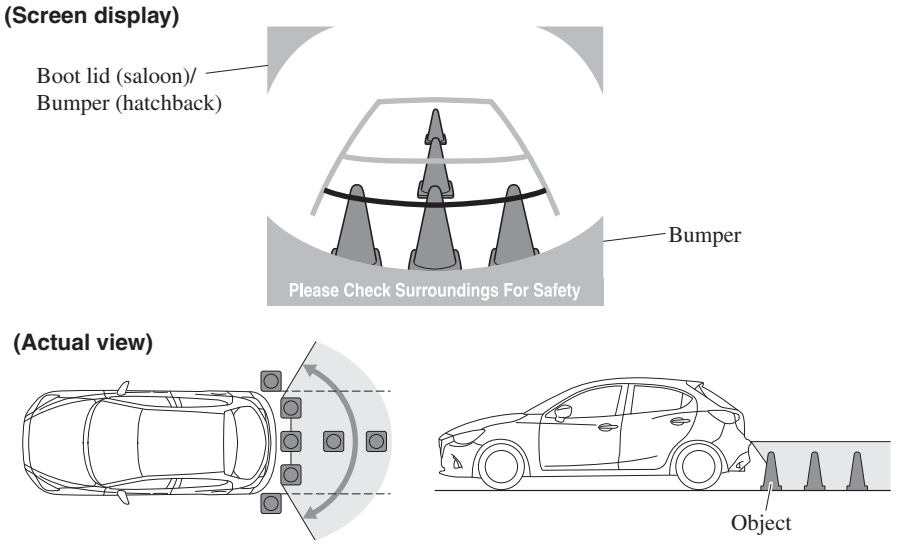

NOTE

- The displayable range varies depending on the vehicle and road conditions.
- The displayable range is limited. Objects under the bumper or around the bumper ends cannot be displayed.
- The distance appearing in the displayed image is different from the actual distance because the rear view parking camera is equipped with a specific lens.
- Some optionally installed vehicle accessories may be picked up by the camera. Do not install any optional parts that can interfere with the camera view, such as illuminating parts or parts made of reflective material.
- It may be difficult to see the display under the following conditions, however, it does not indicate a malfunction.
  - In darkened areas.
  - When the temperature around the lens is high/low.
  - When the camera is wet such as on a rainy day or during periods of high humidity.
  - When foreign material such as mud is stuck around the camera.
  - When the camera lens reflects sunlight or headlight beams.
- Image display may be delayed if the temperature around the camera is low.

▼Viewing the Display

Guide lines which indicate the width of the vehicle (yellow) are displayed on the screen as a reference to the approximate width of the vehicle in comparison to the width of the parking space you are about to back into.
Use this display view for parking your vehicle in a parking space or garage.

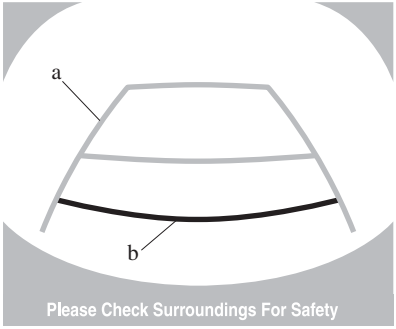

a) Vehicle width guide lines (yellow)
These guide lines serve as a reference to the approximate width of the vehicle.
b) Distance guide lines.
These guide lines indicate the approximate distance to a point measured from the vehicle's rear (from the end of the bumper).

The red and yellow lines indicate the points about 50 cm (19 in) for the red line and 100 cm (39.3 in) for the yellow lines from the rear bumper (at the centre point of each of the lines).

⚠ CAUTION

The guide lines on the screen are fixed lines. They are not synced to the driver's turning of the steering wheel. Always be careful and check the area to the vehicle's rear and the surrounding area directly with your eyes while backing up.

▼Rear View Monitor Operation

The operation of the rear view monitor when reversing the vehicle varies depending on the traffic, road, and vehicle conditions. The amount of steering and the timing also varies depending on conditions, so confirm the surrounding conditions directly with your eyes and steer the vehicle in accordance with the conditions.
Be well aware of the above cautions prior to using the rear view monitor.

NOTE
Images displayed on the monitor from the rear view parking camera are reversed images (mirror images).

1. Shift the shift lever to R to switch the display to the rear view monitor display.
2. Confirming the surrounding conditions, reverse the vehicle.

(Display condition)

(Vehicle condition)

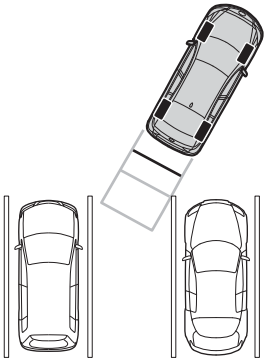

3. After your vehicle begins entering the parking space, continue backing up slowly so that the distance between the vehicle width lines and the sides of the parking space on the left and right are roughly equal.
4. Continue to adjust the steering wheel until the vehicle width guide lines are parallel to the left and right sides of the parking space.

5. Once they are parallel, straighten the wheels and back your vehicle slowly into the parking space. Continue checking the vehicle's surroundings and then stop the vehicle in the best possible position. (If the parking space has division lines, check whether the vehicle width guide lines are parallel to them.)

(Display condition)

(Vehicle condition)

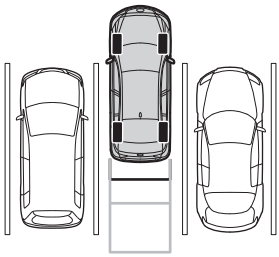

6. When the shift lever is shifted from R to another shift lever position, the screen returns to the previous display.

NOTE

Because there may be a difference between the displayed image, such as indicated below, and the actual conditions when parking, always verify the safety at the rear of the vehicle and the surrounding area directly with your eyes.

- In the image of the parking space (or garage) displayed below, even though the back end and distance guide lines appear parallel in the monitor, they may not actually be parallel on the ground.
- When parking in a space with a division line on only one side of the parking space, the division line and the vehicle width guide line may appear parallel on the monitor, but they may not actually be parallel on the ground.

▼Variance Between Actual Road Conditions and Displayed Image

Some variance occurs between the actual road and the displayed road. Such variance in distance perspective could lead to an accident. Note the following conditions that may cause a variance in distance perspective.

When the vehicle is tilted due to the weight of passengers and load

When the vehicle rear is lowered, the object displayed on the screen appears farther than the actual distance.

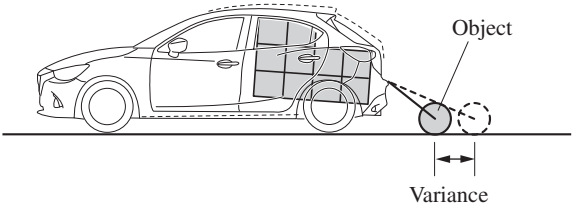

When there is a steep grade behind the vehicle

When there is a steep upgrade (downgrade) behind the vehicle, the object displayed on the screen appears farther (downgrade: closer) than the actual distance.

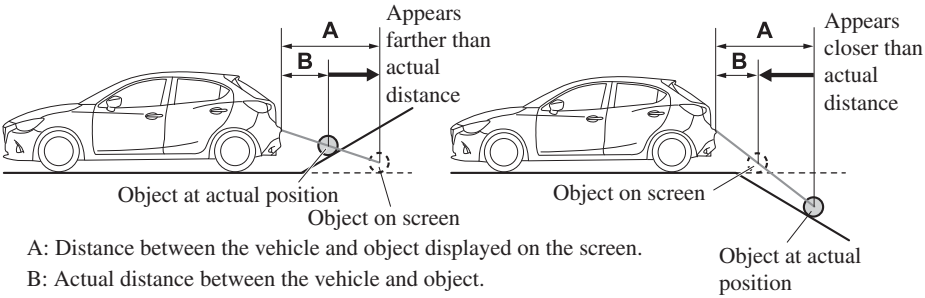

A: Distance between the vehicle and object displayed on the screen.
B: Actual distance between the vehicle and object.

Three-dimensional object on vehicle rear

Because the distance guide lines are displayed based on a flat surface, the distance to the three-dimensional object displayed on the screen is different from the actual distance.

(Screen display)

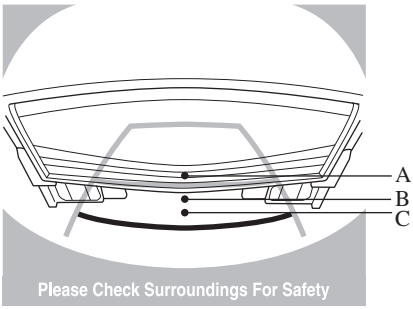

Sensed distance on screen A>B>C

(Actual condition)

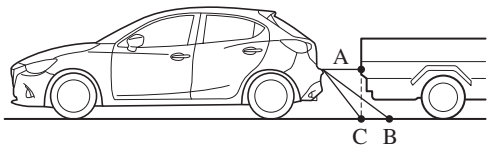

(Actual distance) B>C=A

▼Picture Quality Adjustment

⚠ *WARNING*

Always adjust the picture quality of the rear view monitor while the vehicle is stopped:
Do not adjust the picture quality of the rear view monitor while driving the vehicle. Adjusting the picture quality of the rear view monitor such as brightness, contrast, colour, and tint while driving the vehicle is dangerous as it could distract your attention from the vehicle operation which could lead to an accident.

Picture quality adjustment can be done while the shift lever is in reverse (R).
There are four settings which can be adjusted including, brightness, contrast, tint, and colour. When adjusting, pay sufficient attention to the vehicle surroundings.

1. Select the ⩔ icon on the screen to display the tabs.
2. Select the desired tab item.
3. Adjust the brightness, contrast, tint, and colour using the slider.
   If you need to reset, press the reset button.
4. Select the ⩓ icon on the screen to close the tab.

Parking Sensor System*

The parking sensor system uses ultrasonic sensors to detect obstructions around the vehicle while parking the vehicle in a garage or during parallel parking when the shift lever (manual transaxle)/selector lever (automatic transaxle) is in reverse (R). The system is equipped with an assist device to notify the driver of the approximate distance from the vehicle to the surrounding obstruction using a beep sound.

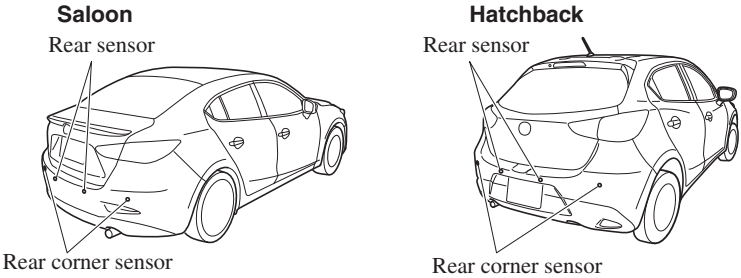

⚠ *WARNING*

Do not rely completely on the parking sensor system and be sure to confirm the safety around your vehicle visually when driving.
This system can assist the driver in operating the vehicle in the backward directions while parking. The detection ranges of the sensors are limited, therefore, driving the vehicle while relying only on the system may cause an accident. Always confirm the safety around your vehicle visually when driving.

*Some models.

NOTE

- Do not install any accessories within the detection ranges of the sensors. It may affect the system operation.
- Depending on the type of obstruction and the surrounding conditions, the detection range of a sensor may narrow, or the sensors may not be able to detect obstructions.
- The system may not operate normally under the following conditions:
  - Mud, ice, or snow is adhering to the sensor area (Returns to normal operation when removed).
  - The sensor area is frozen (Returns to normal operation when the ice is thawed).
  - The sensor is covered by a hand.
  - The sensor is excessively shocked.
  - The vehicle is excessively tilted.
  - Under extremely hot or cold weather conditions.
  - The vehicle is driven on bumps, inclines, gravel, or grass covered roads.
  - Anything which generates ultrasound is near the vehicle, such as another vehicle's horn, the engine sound of a motorcycle, the air brake sound of a large-sized vehicle, or another vehicle's sensors.
  - The vehicle is driven in heavy rain or in road conditions causing water-splash.
  - A commercially-available wing pole or an aerial for a radio transmitter is installed to the vehicle.
  - The vehicle is moving towards a tall or square curbstone.
  - An obstruction is too close to the sensor.
- Obstructions under the bumper may not be detected. Obstructions that are lower than the bumper or thin which may have been initially detected but are no longer detected as the vehicle approaches more closely.
- The following types of obstructions may not be detected:
  - Thin objects such as wire or rope
  - Things which absorb sonic waves easily such as cotton or snow
  - Angular shaped objects
  - Very tall objects, and those which are wide at the top
  - Small, short objects
- Always have the system inspected at an expert repairer, we recommend an Authorised Mazda Repairer if any shock is applied to the bumpers, even in a minor accident. If the sensors are deviated, they cannot detect obstructions.
- The system may have a malfunction if the beep does not operate. Consult an expert repairer, we recommend an Authorised Mazda Repairer.
- The beeper which indicates a system malfunction may not be heard if the ambient temperature is extremely cold, or mud, ice, or snow adheres to the sensor area. Remove any foreign material from the sensor area.
- When installing a trailer hitch, consult an expert repairer, we recommend an Authorised Mazda Repairer.

▼Sensor Detection Range

The sensors detect obstructions within the following range.

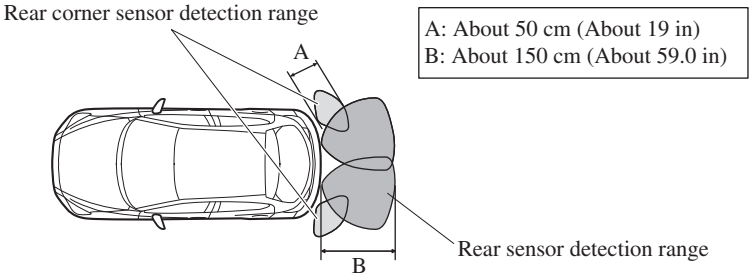

▼Park Assist Sensor System Operation

When the ignition is switched ON and the shift lever (manual transaxle)/selector lever (automatic transaxle) is shifted to the reverse (R), the beep sound activates and the system is enabled for use.

▼Parking Sensor Warning Beep

The beeper sounds as follows while the system is operating.

Rear Sensor

Distance detection area	Distance between vehicle and obstruction	Beeper sound*1
Farthest distance	Approx. 150 cm—60 cm (59.0—23.0 in) 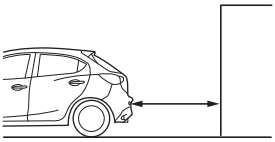	Slow intermittent sound
Far distance	Approx. 60—45 cm (23—17 in) 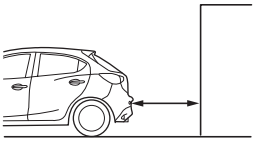	Medium intermittent sound
Middle distance	Approx. 45—35 cm (17—13 in) 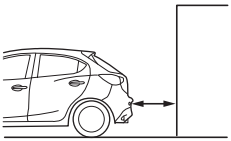	Fast intermittent sound
Close distance	Within approx. 35 cm (13 in) 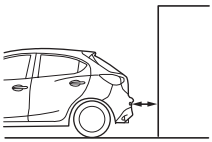	Continuous sound

*1 The rate at which the intermittent sound beeps increases as the vehicle approaches the obstruction.

Rear Corner Sensor

Distance detection area	Distance between vehicle and obstruction	Beeper sound*1
Far distance	Approx. 50—38 cm (19—14 in) 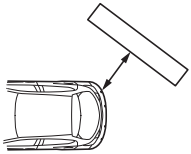	Medium intermittent sound
Middle distance	Approx. 38—25 cm (14.0—9.8 in) 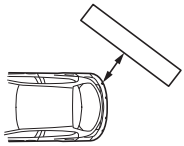	Fast intermittent sound
Close distance	Within approx. 25 cm (9.8 in) 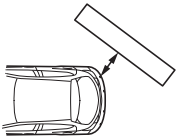	Continuous sound

*1 The rate at which the intermittent sound beeps increases as the vehicle approaches the obstruction.

NOTE

If an obstruction is detected in a zone for 6 seconds or more, the beep sound is stopped (except for the close-distance zone). If the same obstruction is detected in another zone, the corresponding beep sound is heard.

▼When Warning Beep is Activated

The system notifies the driver of an abnormality by activating the beep sound.

Beep	How to check
The beep sound is not heard.	The system may have a malfunction. Have the vehicle inspected at an expert repairer, we recommend an Authorised Mazda Repairer as soon as possible.
When the engine switch is turned ON or if the parking sensor detects a problem while driving, the intermittent sound of the buzzer is heard 1—4 times.*1	Remove any foreign material from the sensor area. If the system does not recover, have the vehicle inspected at an expert repairer, we recommend an Authorised Mazda Repairer.

*1 The number of times the buzzer activates changes depending on the malfunction location.

5 Interior Features

Use of various features for ride comfort, including air-conditioning and audio system.

Air-Conditioning System 5-2
Operating Tips 5-2
Vent Operation 5-3
Manual Type 5-5
Fully Automatic Type 5-12

Audio System 5-16
Aerial 5-16
Operating Tips for Audio System 5-17
Audio set [Type A/Type B (non-touchscreen)] 5-29
Audio set [Type C/Type D (touchscreen)] 5-45
Audio Control Switch Operation* 5-69
AUX/USB mode 5-71

Bluetooth® 5-91
Bluetooth®* 5-91
Bluetooth® Hands-Free (Type A/Type B)* 5-117
Bluetooth® Hands-Free (Type C/Type D)* 5-124
Bluetooth® Audio (Type A/Type B)* 5-133
Bluetooth® Audio (Type C/Type D)* 5-136
Troubleshooting* 5-147

Interior Equipment 5-150
Sunvisors 5-150
Interior Lights 5-150
Accessory Sockets 5-153
Cup Holder 5-154
Bottle Holder 5-154
Storage Compartments 5-155
Removable Ashtray* 5-157

*Some models.

Operating Tips

- Operate the air-conditioning system with the engine running.
- To prevent the battery from being discharged, do not leave the fan control dial on for a long period of time with the ignition switched ON when the engine is not running.
- **(With i-stop)**
  The airflow amount may decrease slightly while the i-stop function is operating.
- Clear all obstructions such as leaves, snow and ice from the bonnet and the air inlet in the cowl grille to improve the system efficiency.
- Use the air-conditioning system to defog the windows and dehumidify the air.
- The recirculate mode should be used when driving through tunnels or while in a traffic jam, or when you would like to shut off outside air for quick cooling of the interior.
- Use the outside air position for ventilation or windscreen defrosting.
- If the vehicle has been parked in direct sunlight during hot weather, open the windows to let warm air escape, then run the air-conditioning system.

(With A/C switch)

- Run the air conditioner about 10 minutes at least once a month to keep internal parts lubricated.
- Have the air conditioner checked before the weather gets hot. Lack of refrigerant may make the air conditioner less efficient.
  The refrigerant specifications are indicated on a label attached to the inside of the engine compartment. Check the label before refilling the refrigerant. If the wrong type of refrigerant is used, it could result in a serious malfunction of the air conditioner.
  For details, consult an expert repairer, we recommend an Authorised Mazda Repairer.

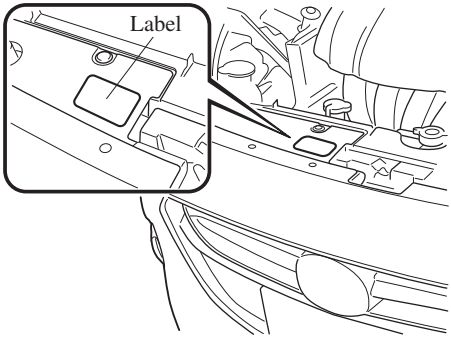

Vent Operation

▼Adjusting the Vents

Directing airflow

To adjust the direction of airflow, move the adjustment knob.

NOTE
When using the air conditioner under humid ambient temperature conditions, the system may blow fog from the vents. This is not a sign of trouble but a result of humid air being suddenly cooled.

Centre vents (driver) and Side vents

Air vent open/close

NOTE
The air vents can be fully opened and closed by operating the knob.

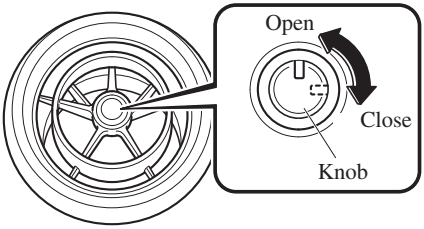

Airflow direction adjustment

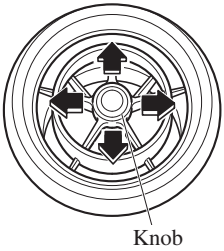

Centre vents (front passenger)

Air vent open/close

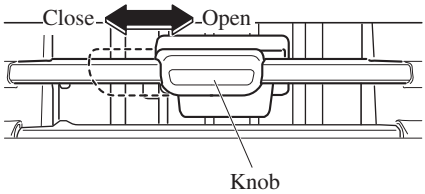

Airflow direction adjustment

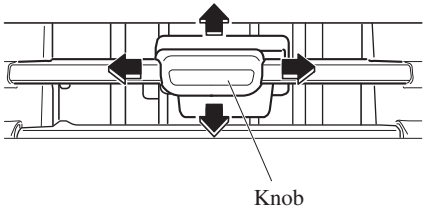

▼Selecting the Airflow Mode

Instrument panel Vents

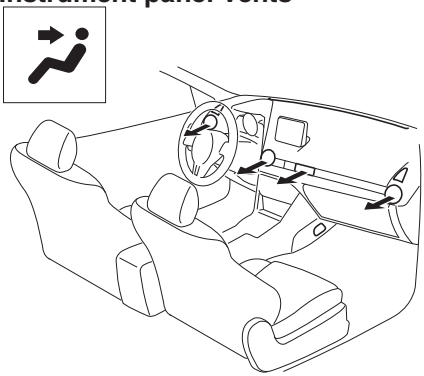

Defroster and Floor Vents

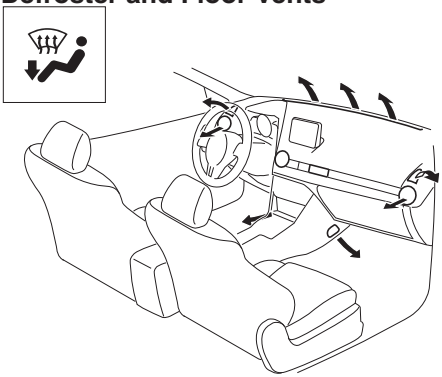

Instrument panel and Floor Vents

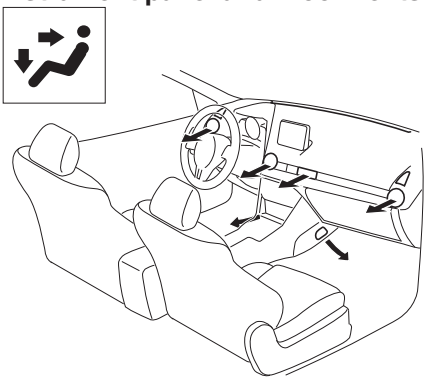

Defroster Vents

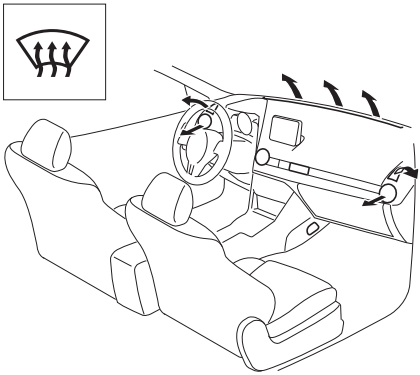

Floor Vents

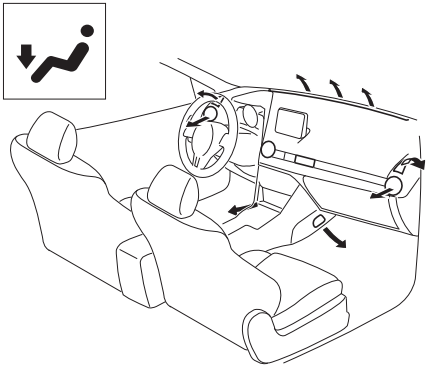

Manual Type

Type A

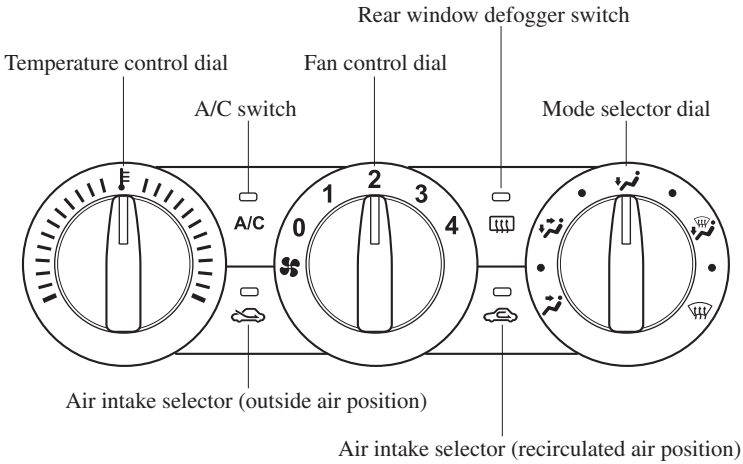

Type B

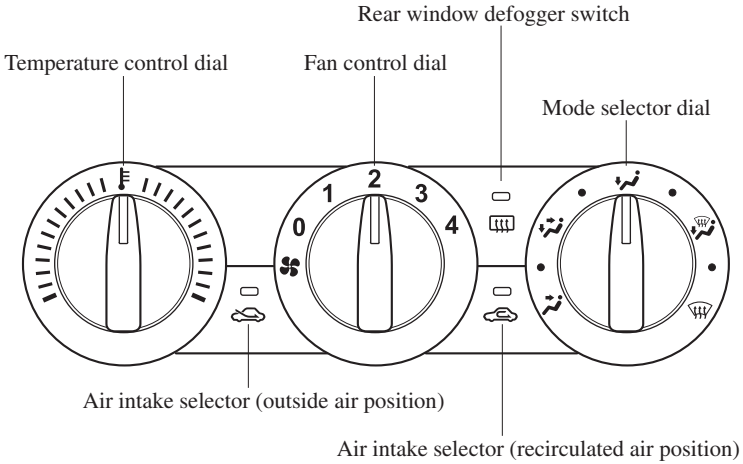

Type C

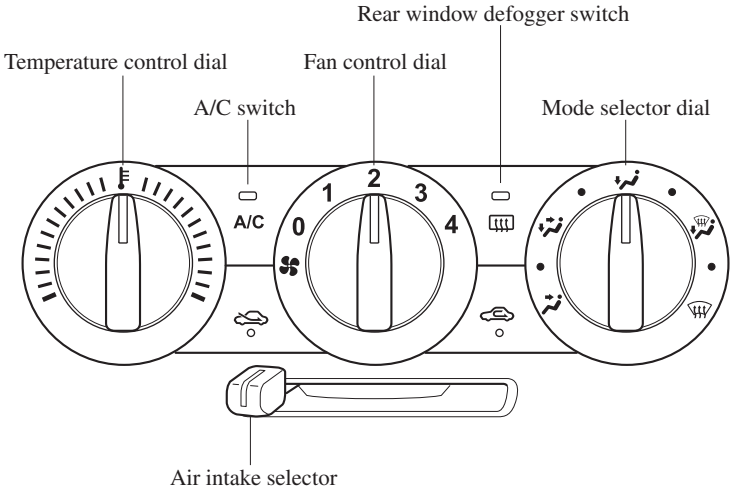
Rear window defogger switch
Temperature control dial
Fan control dial
A/C switch
Mode selector dial
A/C
0
1
2
3
4
Air intake selector

Type D

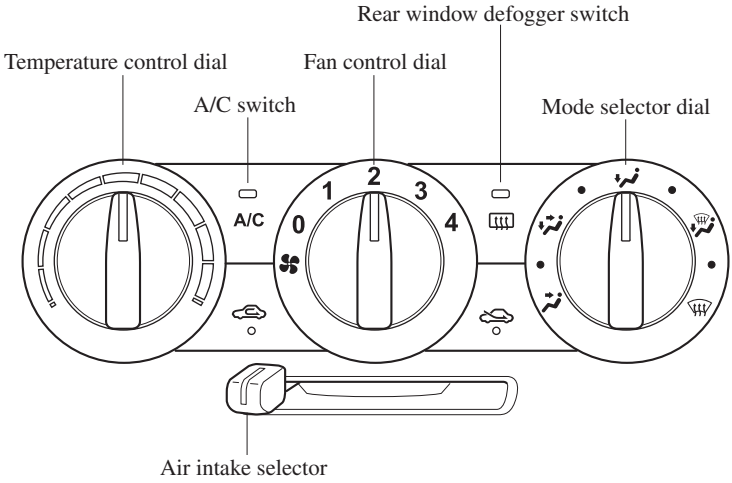
Rear window defogger switch
Temperature control dial
Fan control dial
A/C switch
Mode selector dial
A/C
0
1
2
3
4
Air intake selector

▼Control Switches

Temperature control dial

(Type A/Type B/Type C)
This dial controls temperature. Turn it clockwise for hot and anticlockwise for cold.
(Type D)
This dial controls the air temperature when using the air conditioner. Turn it clockwise for cold.

Fan control dial

This dial allows variable fan speeds.
0—Fan off
1—Low speed
2—Medium low speed
3—Medium high speed
4—High speed

Mode selector dial

Turn the mode selector dial to select airflow mode (page 5-4).

NOTE

- The mode selector dial can be set at the intermediate positions (●) between each mode. Set the dial to an intermediate position if you want to split the airflow between the two modes.
- For example, when the mode selector dial is at the ● position between the and positions, airflow from the floor vent is less than that of the position.

A/C switch (Type A/Type C/Type D)

Press the A/C switch to turn the air conditioner on. The indicator light on the switch will illuminate when the fan control dial is set at position 1, 2, 3, or 4.
Press the switch once again to turn the air conditioner off.

NOTE

The air conditioner may not function when the outside temperature approaches 0 °C (32 °F).

Air intake selector (Type A/Type B)

This switch controls the source of air entering the vehicle.
Press the air intake selector switch to alternate between the outside air and recirculated air positions.

Recirculated air position ( )

Outside air is shut off. Air within the vehicle is recirculated.

Outside air position ( )

Outside air is allowed to enter the cabin. Use this mode for ventilation or windscreen defrosting.

⚠ *WARNING*

Do not use the recirculated air position in cold or rainy weather:
Using the recirculated air position in cold or rainy weather is dangerous as it will cause the windows to fog up. Your vision will be hampered, which could lead to a serious accident.

Air intake selector (Type C/Type D)

This lever controls the source of air entering the vehicle.

It is recommended that under normal conditions the switch be kept in the outside air position.

Recirculated air position ( )

Outside air is shut off. Air within the vehicle is recirculated.

Outside air position ( )

(Type C)
Outside air is taken into the vehicle. Use this position for normal ventilation and heating.
(Type D)
Outside air is taken into the vehicle. Use this position for normal ventilation.

WARNING

Do not use the position in cold or rainy weather:
Using the position in cold or rainy weather is dangerous as it will cause the windows to fog up. Your vision will be hampered, which could lead to a serious accident.

▼Heating*

1. Set the mode selector dial to the position.
2. **(Type A/Type B)**
   Set the air intake selector to the outside air position.
   (Type C)
   Set the air intake selector to the position.
3. Set the temperature control dial to the hot position.
4. Set the fan control dial to the desired speed.
5. **(Type A/Type C)**
   If dehumidified heating is desired, turn on the air conditioner.

NOTE

- If the windscreen fogs up easily, set the mode selector dial to the position.
- **(Type A/Type C)**
  If cooler air is desired at face level, set the mode selector dial to the position and adjust the temperature control dial to maintain maximum comfort.
- The air to the floor is warmer than air to the face (except when the temperature control dial is set at the extreme hot or cold position).

▼Cooling (With air conditioner)

1. Set the mode selector dial to the position.
2. Set the temperature control dial to the cold position.

*Some models.

3. Set the fan control dial to the desired speed.
4. Turn on the air conditioner by pressing the A/C switch.
5. After cooling begins, adjust the fan control dial and temperature control dial as needed to maintain maximum comfort.

⚠ CAUTION

If the air conditioner is used while driving up long hills or in heavy traffic, monitor the engine coolant temperature warning light to see if it is illuminated or flashing (page 4-38).
The air conditioner may cause engine overheating. If the warning light is illuminated or flashing, turn the air-conditioning off (page 7-29).

NOTE

- When maximum cooling is desired, set the temperature control dial to the extreme cold position and set the air intake selector to the recirculated air position, then set the fan control dial to position 4.
- **(Type A/Type C)**
  If warmer air is desired at floor level, set the mode selector dial to the position and adjust the temperature control dial to maintain maximum comfort.
- The air to the floor is warmer than air to the face (except when the temperature control dial is set at the extreme hot or cold position).

▼Ventilation

1. Set the mode selector dial to the position.
2. **(Type A/Type B)**
   Set the air intake selector to the outside air position.
   (Type C/Type D)
   Set the air intake selector to the position.
3. Set the temperature control dial to the desired position.
4. Set the fan control dial to the desired speed.

▼Windscreen Defrosting and Defogging

1. Set the mode selector dial to the position.
2. **(Type C/Type D)**
   Set the air intake selector to the position.
3. Set the temperature control dial to the desired position.
4. Set the fan control dial to the desired speed.
5. **(Type A/Type C)**
   If dehumidified heating is desired, turn on the air conditioner.
   (Type D)
   Press the A/C switch to turn on the air conditioner.

⚠ WARNING

Do not defog the windscreen using the position with the temperature control set to the cold position (Type A/Type B/Type C):

Using the position with the temperature control set to the cold position is dangerous as it will cause the outside of the windscreen to fog up. Your vision will be hampered, which could lead to a serious accident. Set the temperature control to the hot or warm position when using the position.

Do not leave the air conditioner in the position with the temperature control set to cold after the windscreen has defogged (Type D):

Leaving the air conditioner in the position with the temperature control set to cold after the windscreen has defogged is dangerous as the outside of the windscreen will fog up. Your vision will be hampered, which could lead to a serious accident.
Set the mode selector dial except the position and turn on the windscreen wipers to clear the window.

NOTE

- **(Type A/Type C)**
  For maximum defrosting, turn on the air conditioner, set the temperature control dial to the extreme hot position, and the fan control dial to position 4.
- **(Type A/Type C)**
  If warm air is desired at the floor, set the mode selector dial to the position.
- **(Type A/Type B)**
  In the position, the outside air position is automatically selected. The air intake selector cannot be changed to the recirculated air position.

▼Dehumidifying (With air conditioner)

Operate the air conditioner in cool or cold weather to help defog the windscreen and side windows.

1. Set the mode selector dial to the desired position.
2. **(Type A)**
   Set the air intake selector to the outside air position.
   (Type C/Type D)
   Set the air intake selector to the position.
3. Set the temperature control dial to the desired position.
4. Set the fan control dial to the desired speed.
5. Turn on the air conditioner by pressing the A/C switch.

NOTE

(Type A/Type C)
One of the functions of the air conditioner is dehumidifying the air and, to use this function, the temperature does not have to be set to cold. Therefore, set the temperature control dial to the desired position (hot or cold) and turn on the air conditioner when you want to dehumidify the cabin air.

Fully Automatic Type

European model

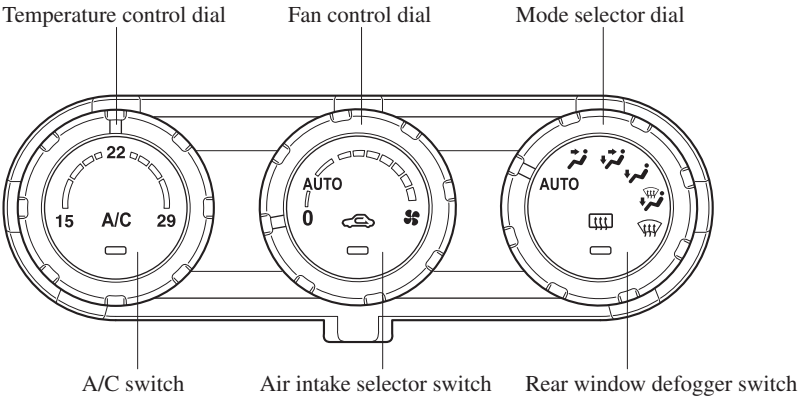

Except European model

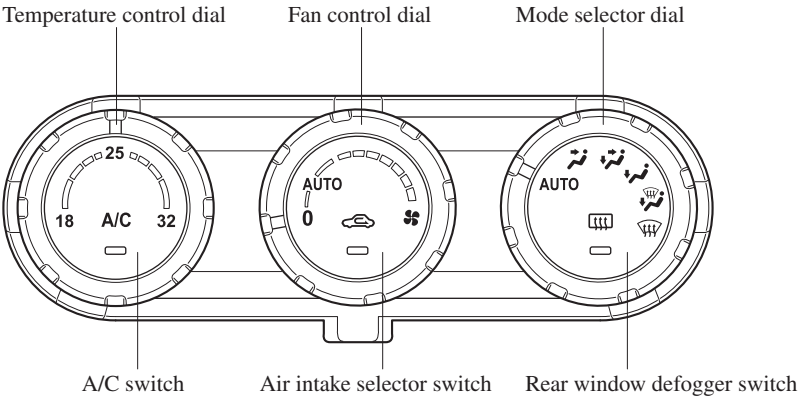

▼Control Switches

Temperature control dial

This dial controls temperature. Turn it clockwise for hot and anticlockwise for cold.

Fan control dial

The fan has seven speeds.

AUTO position

The amount of airflow will be automatically controlled in accordance with the set temperature.

Except AUTO position

The airflow amount can be adjusted to the desired level by turning the dial.

0 position

To turn off the system, set the dial to 0 position.

Mode selector dial

Turn the mode selector dial to select airflow mode (page 5-4).

AUTO position

The airflow mode automatically adjusts to the selected temperature.

Except AUTO position

The desired airflow position can be selected by turning the dial.

NOTE

- With the airflow mode set to the position and the temperature control dial set at a medium temperature, heated air is directed to the feet and air at a comparably lower temperature will flow through the central, left and right vents.
- When the fan control dial is ON, and the mode selector dial is in the position, the air conditioner is automatically turned on and the outside air position is automatically selected to defrost the windscreen.

A/C switch

The air-conditioning (cooling/dehumidifying functions) can be turned on or off by pressing the switch while the fan control dial is at a position other than 0. The indicator light turns on while the air-conditioning is operating.

NOTE

The air conditioner may not function when the outside temperature approaches 0 °C (32 °F).

Air intake selector

Outside or recirculated air positions can be selected. Press the switch to select outside/ recirculated air positions.

Recirculated air position (indicator light illuminated)

Outside air is shut off. Use this position when going through tunnels, driving in congested traffic (high engine exhaust areas) or when quick cooling is desired.

Outside air position (indicator light turned off)

Outside air is allowed to enter the cabin. Use this mode for ventilation or windscreen defrosting.

⚠ *WARNING*

Do not use the position in cold or rainy weather:

Using the position in cold or rainy weather is dangerous as it will cause the windows to fog up. Your vision will be hampered, which could lead to a serious accident.

▼Operation of Automatic Air-conditioning

1. Set the mode selector dial to the AUTO position.
2. Set the air intake selector to the outside air position (indicator light turned off).

NOTE

If the recirculated air position is used for long periods in cold weather or high humidity, the windscreen may fog up more easily.

3. Set the fan control dial to the AUTO position.
4. Press the A/C switch to operate the air-conditioning (turn indicator light on).
5. Set the temperature control dial to the desired position.
6. To turn off the system, set the fan control dial to the 0 position.

NOTE

- Setting the temperature to maximum hot or cold will not provide the desired temperature at a faster rate.
- When selecting heat, the system will restrict airflow until it has warmed to prevent cold air from blowing out of the vents.
  (European model)
  For an optimal cabin temperature, set the temperature close to “22.0”. Adjust to the desired temperature if necessary.
  (Except European model)
  For an optimal cabin temperature, set the temperature close to “25.0”. Adjust to the desired temperature if necessary.

▼Windscreen Defrosting and Defogging

Set the mode selector dial to the position and turn the fan control dial to the desired speed.
In this position, the outside air position is automatically selected, and when the fan control dial is ON, the air conditioner automatically turns on. The air conditioner will directly dehumidify the air to the front windscreen and side windows (page 5-4). Airflow amount will be increased.

⚠ *WARNING*

Set the temperature control to the hot or warm position when defogging (position):

Using the position with the temperature control set to the cold position is dangerous as it will cause the outside of the windscreen to fog up. Your vision will be hampered, which could lead to a serious accident.

NOTE

Use the temperature control dial to increase the air flow temperature and defog the windscreen more quickly.

▼Sunlight/Temperature Sensor

The air-conditioning system measures inside and outside temperatures, and sunlight. It then sets temperatures inside the passenger compartment accordingly.

⚠ CAUTION

Do not obstruct either sensor, otherwise the air-conditioning system will not operate properly.

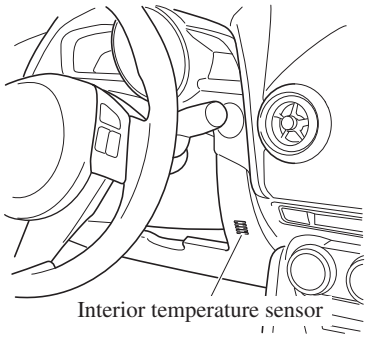

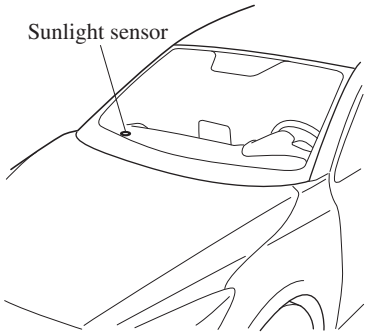

Aerial

▼Embedded Type*

The aerial is embedded into the window glass.

⚠ CAUTION

When washing the inside of the window which has an aerial, use a soft cloth dampened in lukewarm water, gently wiping the aerial lines.
Use of glass cleaning products could damage the aerial.

▼Detachable Type

To remove the aerial, turn it anticlockwise.
To install the aerial, turn it clockwise.
Make sure the aerial is securely installed.

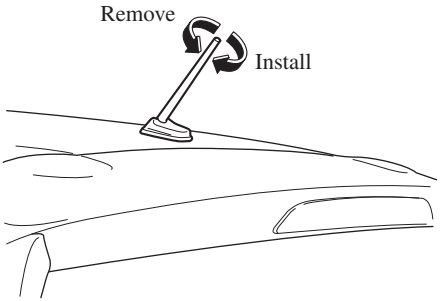

⚠ CAUTION

- To prevent damage to the aerial, remove it before entering a car wash facility or passing beneath a low overhead clearance.
- Be careful around the aerial when removing snow from the roof. Otherwise the aerial could be damaged.

NOTE

When leaving your vehicle unattended, we recommend that you remove the aerial and store it inside the vehicle.

*Some models.

Operating Tips for Audio System

⚠ *WARNING*

Always adjust the audio while the vehicle is stopped:
Do not adjust the audio control switches while driving the vehicle. Adjusting the audio while driving the vehicle is dangerous as it could distract your attention from the vehicle operation which could lead to a serious accident.
Even if the audio control switches are equipped on the steering wheel, learn to use the switches without looking down at them so that you can keep your maximum attention on the road while driving the vehicle.

⚠ CAUTION

For the purposes of safe driving, adjust the audio volume to a level that allows you to hear sounds outside of the vehicle including car horns and particularly emergency vehicle sirens.

NOTE

- To prevent the battery from being discharged, do not leave the audio system on for a long period of time when the engine is not running.
- If a cellular phone or CB radio is used in or near the vehicle, it could cause noise to occur from the audio system, however, this does not indicate that the system has been damaged.

Do not spill any liquid on the audio system.

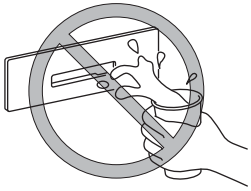

Do not insert any objects, other than CDs, into the slot.

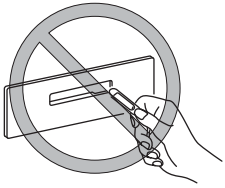

▼Radio Reception

AM characteristics

AM signals bend around such things as buildings or mountains and bounce off the ionosphere.
Therefore, they can reach longer distances than FM signals.
Because of this, two stations may sometimes be picked up on the same frequency at the same time.

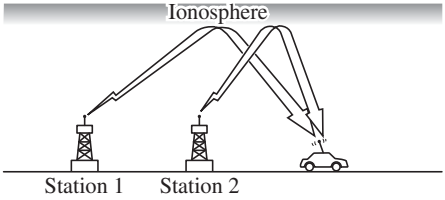

FM characteristics

An FM broadcast range is usually about 40—50 km (25—30 miles) from the source. Because of extra coding needed to break the sound into two channels, stereo FM has even less range than monaural (non-stereo) FM.

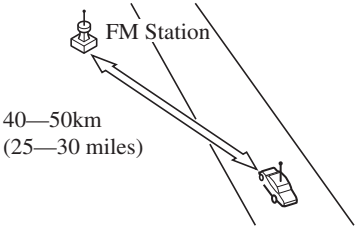

Signals from an FM transmitter are similar to beams of light because they do not bend around corners, but they do reflect. Unlike AM signals, FM signals cannot travel beyond the horizon. Therefore, FM stations cannot be received at the great distances possible with AM reception.

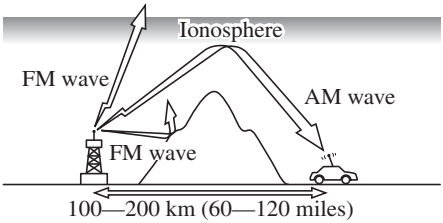

Atmospheric conditions can also affect FM reception. High humidity will cause poor reception. However, cloudy days may provide better reception than clear days.

Multipath noise

Since FM signals can be reflected by obstructions, it is possible to receive both the direct signal and the reflected signal at the same time. This causes a slight delay in reception and may be heard as a broken sound or a distortion. This problem may also be encountered when in close proximity to the transmitter.

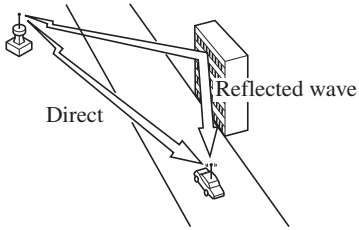

Flutter/Skip noise

Signals from an FM transmitter move in straight lines and become weak in valleys between tall buildings, mountains, and other obstacles. When a vehicle passes through such an area, the reception conditions may change suddenly, resulting in annoying noise.

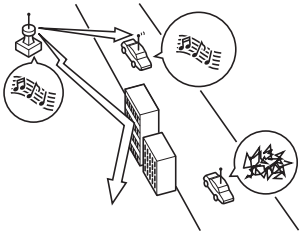

Weak signal noise

In suburban areas, broadcast signals become weak because of distance from the transmitter. Reception in such fringe areas is characterised by sound breakup.

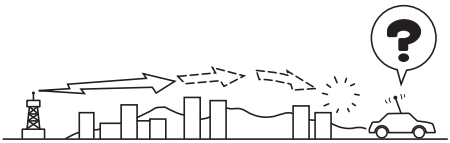

Strong signal noise

This occurs very close to a transmitter tower. The broadcast signals are extremely strong, so the result is noise and sound breakup at the radio receiver.

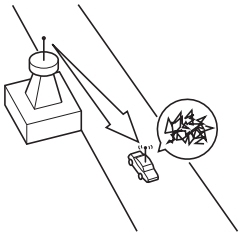

Station drift noise

When a vehicle reaches the area of two strong stations broadcasting at similar frequencies, the original station may be temporarily lost and the second station picked up. At this time there will be some noise from this disturbance.

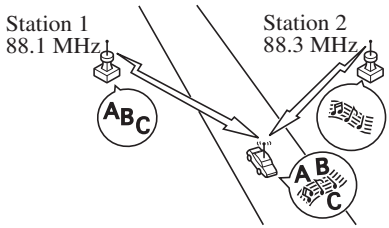

▼Operating Tips for CD Player

Condensation phenomenon

Immediately after turning on the heater when the vehicle is cold, the CD or optical components (prism and lens) in the CD player may become clouded with condensation. At this time, the CD will eject immediately when placed in the unit. A clouded CD can be corrected simply by wiping it with a soft cloth. Clouded optical components will clear naturally in about an hour. Wait for normal operation to return before attempting to use the unit.

Handling the CD player

The following precautions should be observed.

- Do not use deformed or cracked CDs. The disc may not eject resulting in a malfunction.

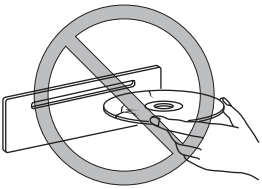

- Do not use non-conventional discs such as heart-shaped, octagonal discs, etc. The disc may not eject resulting in a malfunction.

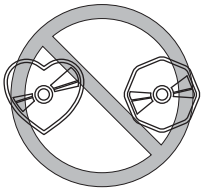

- If the memory portion of the CD is transparent or translucent, do not use the disc.

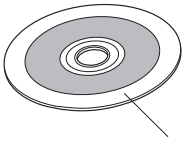

- A new CD may have rough edges on its inner and outer perimeters. If a disc with rough edges is used, proper setting will not be possible and the CD player will not play the CD. In addition, the disc may not eject resulting in a malfunction. Remove the rough edges in advance by using a ball-point pen or pencil as shown below. To remove the rough edges, rub the side of the pen or pencil against the inner and outer perimeter of the CD.

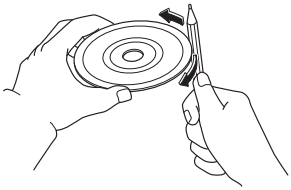

- When driving over uneven surfaces, the sound may jump.

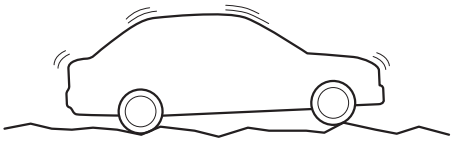

- CDs bearing the logo shown in the illustration can be played. No other discs can be played.

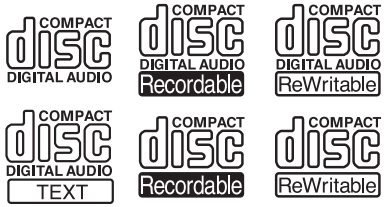

- Use discs that have been legitimately produced. If illegally-copied discs such as pirated discs are used, the system may not operate properly.
- Be sure never to touch the signal surface when handling the CDs. Pick up a CD by grasping the outer edge or the edge of the hole and the outer edge.

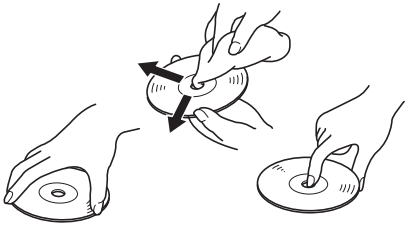

- Do not stick paper or tape on the CD. Avoid scratching the reverse side (the side without a label). The disc may not eject resulting in a malfunction.
- Dust, finger smudges, and dirt can decrease the amount of light reflected from the signal surface, thus affecting sound quality. If the CD should become soiled, gently wipe it with a soft cloth from the centre of the CD to the edge.
- Do not use record sprays, antistatic agents, or household spray cleaners. Volatile chemicals such as benzine and thinner can also damage the surface of the CD and must not be used. Anything that can damage, warp, or fog plastic should never be used to clean CDs.
- The CD player ejects the CD if the CD is inserted upside down. Also dirty and/or defective CDs may be ejected.
- Do not insert cleaning discs in the CD player.
- Do not insert any disc with a peel-off seal affixed to it.
- This unit may not be able to play certain CD-R/CD-RWs made using a computer or music CD recorder due to disc characteristics, scratches, smudges, dirt, etc., or due to dust or condensation on the lens inside the unit.
- Storing CDs in the vehicle exposed to direct sunlight or high temperature may damage the CD-R/CD-RWs, and make them unplayable.
- CD-R/CD-RW exceeding 700 MB cannot be played.
- This unit may not be able to play certain discs made using a computer due to the application (writing software) setting used. (For details, consult the store where the application was purchased.)
- It is possible that certain text data, such as titles, recorded on a CD-R/CD-RW may not be displayed when musical data (CD-DA) is playing.
- The period from when a CD-RW is inserted to when it begins playing is longer than a normal CD or CD-R.
- Completely read the instruction manual and cautions for CD-R/CD-RWs.
- Do not use discs with cellophane tape adhering, partially peeled off labels, or adhesive material exuding from the edges of the CD label. Also, do not use discs with a commercially-available CD-R label affixed. The disc may not eject resulting in a malfunction.

▼Operating Tips for MP3

MP3 stands for MPEG Audio Layer 3, which is standardised voice compression established by the ISO*1 working group (MPEG).
Use of MP3 allows for audio data to be compressed to approximately a tenth of the source data size.
This unit plays files with the extension (.mp3) as MP3 files.

*1 International Organisation for Standardisation

⚠ CAUTION

Do not use an audio file extension on files other than audio files. In addition, do not change the audio file extension. Otherwise, the unit will not recognise the file correctly resulting in noise or a malfunction.

NOTE

Supply of this product only conveys a license for private, non-commercial use and does not convey a license nor imply any right to use this product in any commercial (i.e. revenue-generating) real time broadcasting (terrestrial, satellite, lead and/or any other media), broadcasting/streaming via the Internet, intranets and/or other networks or in other electronic content distribution systems, such as pay-audio or audio-on-demand applications. An independent license for such use is required.
For details, please visit http://www.mp3licensing.com.

- This audio system handles MP3 files that have been recorded on CD-R/CD-RW/CD-ROMs.
- When naming an MP3 file, be sure to add an MP3 file extension (.mp3) after the file name.
- The number of characters which can be displayed is restricted.

▼Operating Tips for WMA

WMA is short for Windows Media Audio and is the audio compression format used by Microsoft.
Audio data can be created and stored at a higher compression ratio than MP3.
This unit plays files with the extension (.wma) as WMA files.

*Microsoft and Windows Media are registered trademarks of Microsoft Corporation U.S. in the United States and other countries.

⚠ CAUTION

Do not use an audio file extension on files other than audio files. In addition, do not change the audio file extension. Otherwise, the unit will not recognise the file correctly resulting in noise or a malfunction.

- WMA files written under specifications other than the indicated specification may not play normally or files or folder names may not display correctly.

- The file extension may not be provided depending on the computer operating system, version, software, or settings. In this case, add the file extension “.wma” to the end of the file name, and then write it to the disc.

▼Operating Tips for AAC

AAC stands for Advanced Audio Coding, which is standardised voice compression established by the ISO[*1] working group (MPEG). Audio data can be created and stored at a higher compression ratio than MP3.
This unit plays files with the extensions (.aac/.m4a/.wav[*2]) as the AAC files.

*1 International Organisation for Standardisation
*2 Type C/Type D

⚠ CAUTION

Do not use an audio file extension on files other than audio files. In addition, do not change the audio file extension. Otherwise, the unit will not recognise the file correctly resulting in noise or a malfunction.

- AAC files written under specifications other than the indicated specification may not play normally or files or folder names may not display correctly.
- The file extension may not be provided depending on the computer operating system, version, software, or settings. In this case, add the file extension “.aac ”, “.m4a”, or “.wav[*2]” to the end of the file name, and then write it to the memory.
  *2 Type C/Type D

▼Operating Tips for DVD Player

Condensation phenomenon

Immediately after turning on the heater when the vehicle is cold, the DVD or optical components (prism and lens) in the DVD player may become clouded with condensation. At this time, the DVD will eject immediately when placed in the unit. A clouded DVD can be corrected simply by wiping it with a soft cloth. Clouded optical components will clear naturally in about an hour. Wait for normal operation to return before attempting to use the unit.

Handling the DVD player

The following precautions should be observed.

- Do not use deformed or cracked DVDs. The disc may not eject resulting in a malfunction.

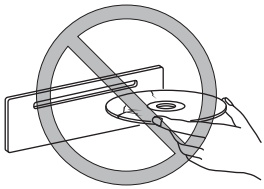

- Do not use non-conventional discs such as heart-shaped, etc. The disc may not eject resulting in a malfunction.
- If the memory portion of the DVD is transparent or translucent, do not use the disc.

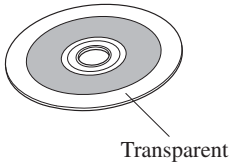

- A new DVD may have rough edges on its inner and outer perimeters. If a disc with rough edges is used, proper setting will not be possible and the DVD player will not play the DVD. In addition, the disc may not eject resulting in a malfunction. Remove the rough edges in advance by using a ball-point pen or pencil as shown below. To remove the rough edges, rub the side of the pen or pencil against the inner and outer perimeter of the DVD.

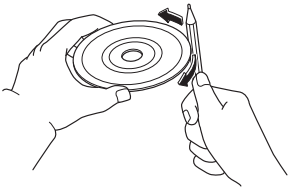

- When driving over uneven surfaces, the sound may jump.

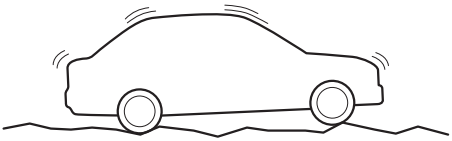

- DVDs bearing the logo shown in the illustration or DVD-R/DVD+R/DVD-RW/DVD+RW written with video data (DVD-Video/DVD-VR file) can be played.

- Use discs that have been legitimately produced. If illegally-copied discs such as pirated discs are used, the system may not operate properly.

- Be sure never to touch the signal surface when handling the DVDs. Pick up a DVD by grasping the outer edge or the edge of the hole and the outer edge.

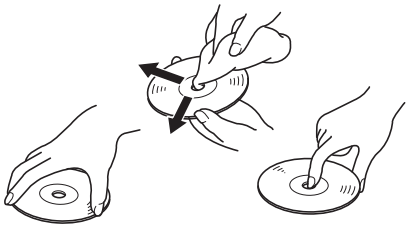

- Do not stick paper or tape on the DVD. Avoid scratching the reverse side (the side without a label). The disc may not eject resulting in a malfunction.
- Dust, finger smudges, and dirt can decrease the amount of light reflected from the signal surface, thus affecting sound quality. If the DVD should become soiled, gently wipe it with a soft cloth from the centre of the DVD to the edge.
- Do not use record sprays, antistatic agents, or household spray cleaners. Volatile chemicals such as benzine and thinner can also damage the surface of the DVD and must not be used. Anything that can damage, warp, or fog plastic should never be used to clean DVDs.
- The DVD player ejects the DVD if the DVD is inserted upside down. Also dirty and/or defective DVDs may be ejected.
- Do not insert cleaning discs in the DVD player.
- Do not insert any disc with a peel-off seal affixed to it.

- This unit may not be able to play certain DVD-R/DVD+R/DVD-RW/DVD+RWs made using a computer or DVD recorder due to disc characteristics, scratches, smudges, dirt, etc., or due to dust or condensation on the lens inside the unit.
- Storing DVDs in the vehicle exposed to direct sunlight or high temperature may damage the DVD-R/DVD+R/DVD-RW/DVD+RWs, and make them unplayable.
- This unit may not be able to play certain discs made using a computer due to the application (writing software) setting used. (For details, consult the store where the application was purchased.)
- Completely read the instruction manual and cautions for DVD-R/DVD+R/DVD-RW/DVD+RWs.
- Do not use discs with cellophane tape adhering, partially peeled off labels, or adhesive material exuding from the edges of the DVD label. Also, do not use discs with a commercially-available DVD-R label affixed. The disc may not eject resulting in a malfunction.
- The conditions in which a DVD video can be played may be pre-determined depending on the intentions of the disc software creator. Functions may not operate as the user intends because this DVD player operates according to the design intentions of the software creator. Always refer to the instructions accompanying the disc to be played.
- Manufactured under license by Dolby Labouratories, Inc.. Dolby and the double-D symbol are trademarks of Dolby Labouratories.

NOTE

- Video data (DVD-Video/DVD-VR files) written to DVD/DVD-R/DVD+R/DVD-RW/DVD+RW can be played.
- This unit is compatible for playback of dual-layer DVD/DVD-R.
- Regional number for this unit is [3].
- DVD-Video/DVD-VR files written under specifications other than the indicated specification may not play normally or files or folder names may not display correctly.

Mark indicating on disc

Marks indicated on discs or packages are as follows:

Mark		Meaning
PAL		Indicates a colour TV system.
2		Indicates the number of audio tracks. The number indicates the number of audio recordings.
2		Indicates the number of subtitled languages. The number indicates the number of recorded languages.
3		Number of angles. The number indicates the number of recorded angles.
16:9 LB	4 : 3	Indicates the screen modes which can be selected. “16:9” indicates a wide screen and “4:3” indicates a standard screen.
ALL	1	Indicates the region code for which a disc can be played. ALL indicates global applicability, and a number indicates applicability based on region.

Glossary

DVD-Video

DVD-Video is a video image storing standard determined by the DVD forum. “MPEG2”, a global standard in digital compression technologies, has been adopted which compresses on average about 1/40th of the image data and stores it. In addition, a variable-rate coding technology, which changes the assigned information amount according to the shape of the screen image, has been adopted. Audio information can be stored using Dolby digital instead of PCM (Pulse Code Modulation) and more realistic sounding audio can be enjoyed.
In addition, various, supplementary functions such as multi-language availability are provided for enhanced enjoyment.

DVD-VR

DVD-VR is short for DVD Video Recording Format; video image storing standard determined by the DVD forum.

Multi-angle

One of the DVD player's functions. Because scenes can be recorded in multiple angles (camera position), users can choose a desired angle.

Multi-language

As a function of the DVD player, audio or subtitles for the same video images can be stored in multiple languages and the language can be selected freely.

Region code

DVD players and discs are assigned codes for each market region and only discs manufactured for that specific region can be played.
A disc cannot be played if the region code assigned to the player is not indicated on the disc.
In addition, even if a region code is not indicated on the disc, disc playback may be prohibited depending on the region. In this case, a disc may not be playable in this DVD player.

▼Operating Tips for OGG

OGG is the audio compression format for Xiph. Org Foundation.
Audio data can be created and stored at a higher compression ratio than MP3.
This unit plays files with the extension (.ogg) as OGG files.

⚠ CAUTION

Do not use an audio file extension on files other than audio files. In addition, do not change the audio file extension. Otherwise, the unit will not recognise the file correctly resulting in noise or a malfunction.

- OGG files written under specifications other than the indicated specification may not play normally or files or folder names may not display correctly.
- The file extension may not be provided depending on the computer operating system, version, software, or settings. In this case, add the file extension “.ogg” to the end of the file name, and then write it to the disc.

▼Operating Tips for USB device

This unit plays audio files as follows:

Extension	Playback with this unit
.mp3	MP3
.wma	WMA
.aac	AAC
.m4a	
.wav*1	
.ogg*1	OGG

*1 Type C/Type D

⚠ CAUTION

Do not use an audio file extension on files other than audio files. In addition, do not change the audio file extension. Otherwise, the unit will not recognise the file correctly resulting in noise or a malfunction.

NOTE

- Playback may not be possible depending on the type and condition of the USB flash memory even if the audio file complies with the standard above.
- A copyright protected WMA/AAC file cannot be played in this unit.
- The order of the music data stored in the device may differ from the playback order.
- To prevent loss or damage of stored data, we recommend that you always back up your data.
- If a device exceeds the maximum electric current value of 1,000 mA, it may not operate or recharge when connected.
- Do not pull out the USB device while in the USB mode (only pull it out while in FM/AM radio or CD mode).
- The device will not operate if the data is password protected.

MP3/WMA/AAC/OGG*1 files written under specifications other than the indicated specification may not play normally or files/folder names may not display correctly.

*1 Type C/Type D

▼Operating Tips for iPod

This unit supports playback of music files recorded to an iPod.

*iPod is a trademark of Apple Inc., registered in the U.S. and other countries.

The iPod may not be compatible depending on the model or OS version. In this case, an error message is displayed.

⚠ CAUTION

- Remove the iPod when it is not in use. Because the iPod is not designed to withstand excessive changes in temperature inside the cabin, it could be damaged or the battery may deteriorate due to the excessive temperature or humidity inside the cabin if it is left in the vehicle.
- If data in the iPod is lost while it is connected to the unit, Mazda cannot guarantee recovery of any lost data.
- If the iPod battery is deteriorated, the iPod may not recharge and playback may not be possible when it is connected to the unit.
- For details on using the iPod, refer to the iPod instruction manual.
- When connecting the iPod to a USB port, all commands are made from the audio unit. iPod control is not possible.

NOTE

The audio unit cannot display images or videos stored in an iPod.

Audio set [Type A/Type B (non-touchscreen)]

Type A (RDS non-compatible)

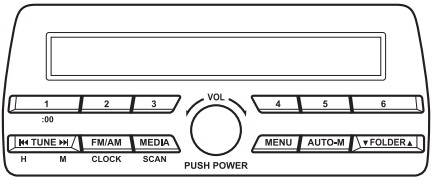

Type B (RDS compatible)

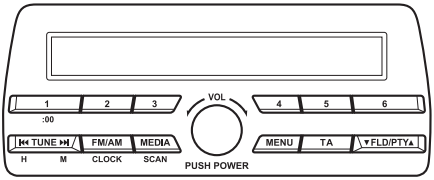

① Power/Volume/Sound Controls ..... page 5-30
② Clock ..... page 5-32
③ Operating the Radio (Type A) ..... page 5-34
④ Operating the Radio (Type B) ..... page 5-36
⑤ Operating the Compact Disc (CD) Player ..... page 5-40
⑥ How to use Auxiliary jack/USB port ..... page 5-43
⑦ Error Indications ..... page 5-44

▼Power/Volume/Sound Controls

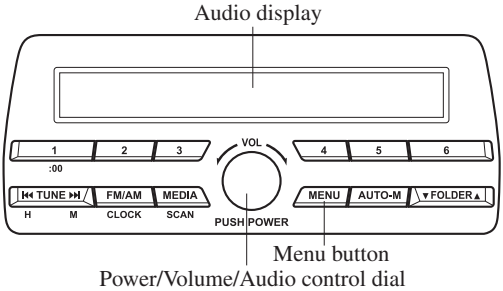

The figure is an example showing the type A unit.

Power ON/OFF

Switch the ignition to ACC or ON. Press the power/volume dial to turn the audio system on. Press the power/volume dial again to turn the audio system off.

Volume adjustment

To adjust the volume, turn the power/volume dial. Turn the power/volume dial clockwise to increase volume, anticlockwise to decrease it.

Audio sound adjustment

1. Press the menu button (**MENU**) to select the function. The selected function will be indicated.
2. Turn the audio control dial to adjust the selected functions as follows:

Indication	Setting value	
	Turn Anticlockwise	Turn Clockwise
AF*1 (Setting Alternative Frequency (AF))	Off	On
REG*1 (Setting Regional Programme (REG))	Off	On
ALC (Automatic volume adjustment)	Level decrease	Level increase
BASS (Low pitch sound)	Decrease bass	Increase bass
TREB (Treble sound)	Decrease treble	Increase treble
FADE (Front/back volume balance)	Shift the sound to the front	Shift the sound to the rear
BAL (Left/right volume balance)	Shift the sound to the left	Shift the sound to the right
BEEP (Audio operation sound)	Off	On
BT SETUP*2	Select mode	
12Hr < > 24Hr (12 Hr/24 Hr time adjustment)	12Hr (Flashing)	24Hr (Flashing)

*1 Type B
*2 Depending on the model, this function may not be available.

NOTE
If not operated for several seconds, the display returns to the previous display. To reset bass, treble, fade, and balance, press the menu button (**MENU**) for 2 seconds. The unit will beep and “CLEAR” will be displayed.

AF (Setting Alternative Frequency (AF)) (Type B)

The AF function of the Radio Data System (RDS) can be set on or off.
Refer to Operating the Radio (Type B) on page 5-36.

REG (Setting Regional Programme (REG)) (Type B)

The REG function of the Radio Data System (RDS) can be set on or off.
Refer to Operating the Radio (Type B) on page 5-36.

ALC (Automatic volume adjustment)

The automatic level control (ALC) changes the audio volume automatically according to the vehicle speed. The faster the vehicle speed, the higher the volume increases. ALC has ALC OFF and ALC LEVEL 1 to 7 modes. At ALC LEVEL 7, the amount that the volume can increase is at the maximum. Select the mode according to the driving conditions.

BEEP (Audio operation sound)

The setting for the operation sound when pressing and holding a button can be changed. The initial setting is ON. Set to OFF to mute the operation sound.

BT SETUP mode*

Music and other audio such as voice data recorded on portable audio devices and mobile phones available on the market which are equipped with the Bluetooth® transmission function can be listened to via wireless transmission over the vehicle's speakers. Using the BT SETUP mode, these devices can be programmed to the Bluetooth® unit or changed (page 5-94).

12Hr < > 24Hr (12 Hr/24 Hr time adjustment)

Rotating the audio control dial switches the display between 12 and 24-hour clock time (page 5-32).

*Some models.

▼Clock

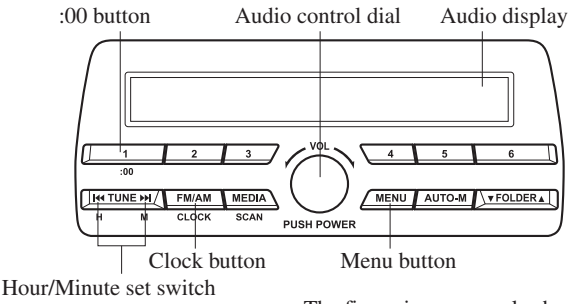

The figure is an example showing the type A unit.

Setting the time

The clock can be set at any time when the ignition is switched to ACC or ON.

1. To adjust the time, press the clock button (**FM/AM**) for about 2 seconds until a beep is heard.
2. The clock's current time will flash.
   Time adjustment
   - To adjust the time, press the hour/minute set button (⏮, ⏭) while the clock's current time is flashing.
   - The hours advance while the hour set button (⏮) is pressed. The minutes advance while the minute set button (⏭) is pressed.
3. Press the clock button (**FM/AM**) again to start the clock.

Time resetting

1. Press the clock button (**FM/AM**) for about 2 seconds until a beep is heard.
2. Press the :00 button (1).
3. When the button is pressed, the time will be reset as follows:
   (Example)
   12:01—12:29→12:00
   12:30—12:59→1:00

NOTE

- When the :00 button (1) is pressed, the seconds will start at “00”.
- Switching between 12 and 24-hour clock time:
  Press the menu button (**MENU**) several times until 12 and 24-hour clock time are displayed. Turn the audio control dial in either direction, select the desired clock setting while the preferred clock time is flashing.

MEMO

▼Operating the Radio (Type A)

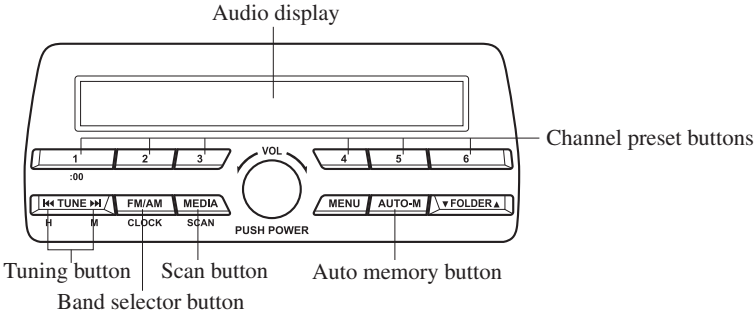

Radio ON

Press a band selector button (**FM/AM**) to turn the radio on.

Band selection

Successively pressing the band selector button (**FM/AM**) switches the bands as follows: FM1→FM2→AM.

The selected mode will be indicated.

NOTE
If the FM broadcast signal becomes weak, reception automatically changes from STEREO to MONO for reduced noise.

Tuning

The radio has the following tuning methods: Manual, Seek, Scan, Preset channel, and Auto memory tuning. The easiest way to tune stations is to set them on preset channels.

Manual tuning

Select the station by pressing the tuning button (⏮, ⏭) lightly.

Seek tuning

Automatic search for radio stations starts when the tuning button (⏮, ⏭) is pressed until a beep sound is heard. The search stops when a station is found.

NOTE
If you continue to press and hold the button, the frequency will continue changing without stopping.

Scan tuning

Press and hold the scan button (**MEDIA**) to automatically sample strong stations. Scanning stops at each station for about 5 seconds. To hold a station, press and hold the scan button (**MEDIA**) again during this interval.

Preset channel tuning

The 6 preset channels can be used to store 6 AM and 12 FM stations.

1. To set a channel first select AM, FM1, or FM2. Tune to the desired station.
2. Press a channel preset button for about 2 seconds until a beep is heard. The preset channel number or station frequency will be displayed. The station is now held in the memory.
3. Repeat this operation for the other stations and bands you want to store. To tune one in the memory, select AM, FM1, or FM2 and then press its channel preset button. The station frequency or the channel number will be displayed.

Auto memory tuning

This is especially useful when driving in an area where the local stations are not known.

Press and hold the auto memory button (AUTO-M) for about 2 seconds until a beep is heard; the system will automatically scan and temporarily store up to 6 stations with the strongest frequencies in each selected band in that area.

After scanning is completed, the station with the strongest frequency will be tuned and its frequency displayed. Press and release the auto memory button (AUTO-M) to recall stations from the auto-stored stations. One stored station will be selected each time and its frequency and channel number will be displayed.

NOTE
If no stations can be tuned after scanning operations, “A” will be displayed.

▼Operating the Radio (Type B)

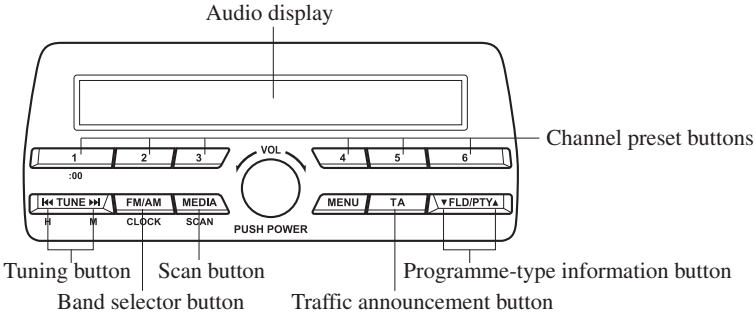

Radio ON

Press a band selector button (**FM/AM**) to turn the radio on.

Band selection

Successively pressing the band selector button (**FM/AM**) switches the bands as follows: FM1→FM2→MW/LW.

The selected mode will be indicated.

NOTE
If the FM broadcast signal becomes weak, reception automatically changes from STEREO to MONO for reduced noise.

Tuning

The radio has the following tuning methods: Manual, Seek, Scan, Preset channel, and Auto memory tuning. The easiest way to tune stations is to set them on preset channels.

Manual tuning

Select the station by pressing the tuning button (⏮, ⏭) lightly.

Seek tuning

Automatic search for radio stations starts when the tuning button (⏮, ⏭) is pressed until a beep sound is heard. The search stops when a station is found.

NOTE
If you continue to press and hold the button, the frequency will continue changing without stopping.

Scan tuning

Press and hold the scan button (**MEDIA**) to automatically sample strong stations. Scanning stops at each station for about 5 seconds. To hold a station, press and hold the scan button (**MEDIA**) again during this interval.

Preset channel tuning

The 6 preset channels can be used to store 6 MW/LW and 12 FM stations.

1. To set a channel first select MW/LW, FM1, or FM2. Tune to the desired station.
2. Press a channel preset button for about 2 seconds until a beep is heard. The preset channel number or station frequency will be displayed. The station is now held in the memory.
3. Repeat this operation for the other stations and bands you want to store. To tune one in the memory, select MW/LW, FM1, or FM2 and then press its channel preset button. The station frequency or the channel number will be displayed.

Radio Data System (RDS)

NOTE
The radio data system (RDS) does not function if it is out of the system's service coverage area.

Alternative frequency (AF)

AF functions on FM stations. Press the menu button (**MENU**) and select the AF mode to turn it on and “AF” will be displayed. If the radio reception of the current station weakens, the system switches to an alternative station automatically.

If you wish to continue a regional programme, press the menu button (**MENU**) and select the REG mode to turn it on. “REG ON” is displayed. To cancel it, press the audio control dial and select the REG mode to turn it off. “REG OFF” is displayed.

Traffic announcement (TA)

If the traffic announcement button (**TA**) is pressed, the unit switches to TA mode and “TA” is displayed.

If a TA broadcast is received while in the TA mode, the TA broadcast intercedes even while using other functions (FM, CD, USB device, AUX, or BT audio), and “Traffic Info” is displayed.
During a TA broadcast, press the traffic announcement button (**TA**) to end the broadcast and return to the previous mode.

Programme-type information (PTY)

Some FM stations transmit programme-type codes. This code enables alternative stations transmitting the same programme-type code to be found quickly.

Press the programme-type information button (▼,▲) while in FM mode. The programme-type code and “PTY” will be displayed during reception. If there is no programme-type code, “None” will be displayed.

(To choose a programme type:)

1. Press the Programme-type information button (▼,▲) when the programme-type code is displayed.
2. Operate any one of the following:
   - Press the pre-programmed channel preset button (1 to 6).
   - Press the Programme-type information button (▼,▲).

(To scan for programme-type information:)

1. Press the Programme-type information button (▼,▲) when the programme-type code is displayed.
2. Press the Programme-type information button (▼,▲) until the beep sounds. The unit will scan for broadcasts, if none are found, “Nothing” will be displayed and the unit will return to the previously tuned band.

(To store programme types in the channel preset buttons:)

1. Press the Programme-type information button (▼,▲) when the programme-type code is displayed.
2. Press the Programme-type information button (▼,▲) and select the programme type.
3. While the programme type is displayed, press a channel preset button for about 2 seconds.

Emergency broadcast

If an emergency broadcast is received, the emergency broadcast intercedes even while using other functions (FM, CD, USB device, AUX, or BT audio), and “Alarm!” is displayed.

When the emergency broadcast ends, the system will return to the previous mode.

MEMO

▼Operating the Compact Disc (CD) Player*

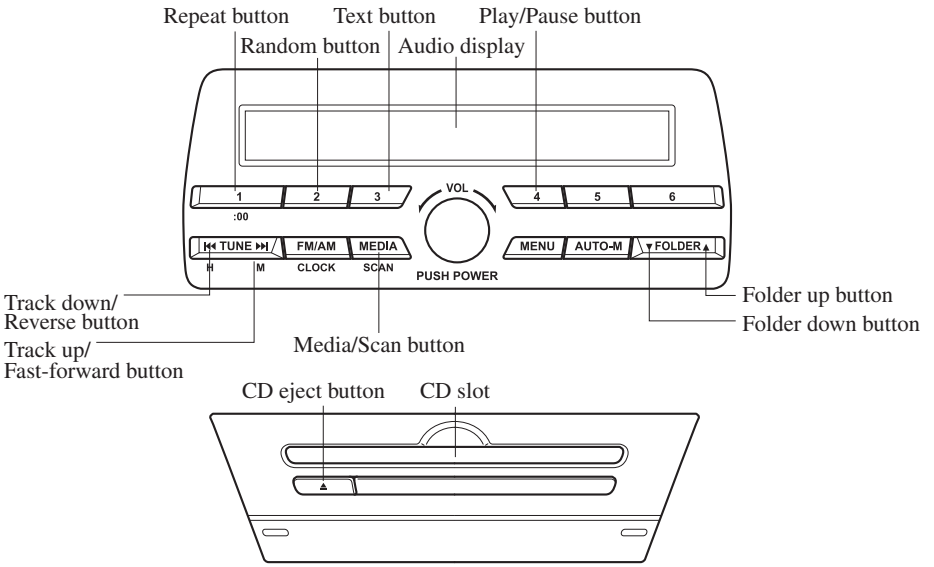

The figure is an example showing the type A unit.

Type	Playable data
Music/MP3/WMA/ AAC CD player	•Music data (CD-DA) •MP3/WMA/AAC file

NOTE

If a disc has both music data (CD-DA) and MP3/WMA/AAC files, playback of the two or three file types differs depending on how the disc was recorded.

Inserting the CD

Insert the CD into the slot, label-side up. The auto-loading mechanism will set the CD and begin play.

NOTE

There will be a short lapse before play begins while the player reads the digital signals on the CD.

Ejecting the CD

Press the CD eject button (⏏) to eject the CD.

*Some models.

Playback

Press the media button (MEDIA) to switch to CD mode and start playback.

NOTE
The CD mode cannot be selected if a CD has not been inserted.

Pause

To stop playback, press the Play/Pause button (4).
Press the button again to resume playback.

Fast-forward/Reverse

Press and hold the fast-forward button (▶▶I) to advance through a track at high speed.
Press and hold the reverse button (I◀◀) to reverse through a track at high speed.

Track search

Press the track up button (▶▶I) once to skip forward to the beginning of the next track.
Press the track down button (I◀◀) within a few seconds after playback begins to track down to the beginning of the previous track.
Press the track down button (I◀◀) after a few seconds have elapsed to start playback from the beginning of the current track.

Folder search (during MP3/WMA/AAC CD playback)

To change to the previous folder, press the folder down button (▼), or press the folder up button (▲) to advance to the next folder.

Music scan

During music CD playback

This function scans the titles on a CD and plays 10 seconds of each song to aid you in finding a song you want to listen to.
Press and hold the scan button (MEDIA) during playback to start the scan play operation (the track number will flash).
Press and hold the scan button (MEDIA) again to cancel scan playback.

During MP3/WMA/AAC CD playback

This function scans the titles in a folder currently being played and plays 10 seconds of each song to aid you in finding a song you want to listen to. Press and hold the scan button (MEDIA) during playback to start the scan play operation (the track number will flash).
Press and hold the scan button (MEDIA) again to cancel scan playback.

NOTE
If the unit is left in scan, normal playback will resume where scan was selected.

Repeat playback

During music CD playback

1. Press the repeat button (1) during playback to play the current track repeatedly. “TRACK RPT” is displayed (♫ is displayed next to RPT at the bottom of the display area).
2. Press the button again to cancel the repeat playback.

During MP3/WMA/AAC CD playback

(Track repeat)

1. Press the repeat button (1) during playback to play the current track repeatedly. “TRACK RPT” is displayed (♫ is displayed next to RPT at the bottom of the display area).
2. To cancel the repeat playback, press the button again after 3 seconds.

(Folder repeat)

1. Press the repeat button (1) during playback, and then press the button again within 3 seconds to play the tracks in the current folder repeatedly. “FOLDER RPT” is displayed (🗀 is displayed next to RPT at the bottom of the display area).
2. Press the button again to cancel the repeat playback.

Random playback

Tracks are randomly selected and played.

During music CD playback

1. Press the random button (2) during playback to play the tracks on the CD randomly. “DISC RDM” is displayed (⊘ is displayed next to RDM at the bottom of the display area).
2. Press the button again to cancel the random playback.

During MP3/WMA/AAC CD playback

(Folder random)

1. Press the random button (2) during playback to play the tracks in the folder randomly. “FOLDER RDM” is displayed (🗀 is displayed next to RDM at the bottom of the display area).
2. To cancel the random playback, press the button again after 3 seconds.

(CD random)

1. Press the random button (2) during playback, and then press the button again within 3 seconds to play the tracks on the CD randomly. “DISC RDM” is displayed (⊘ is displayed next to RDM at the bottom of the display area).
2. Press the button again to cancel the random playback.

Switching the display

The information displayed on the audio display changes as follows each time the text button (3) is pressed during playback.

Music CD

Button	Information displayed on audio display
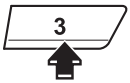	Track number/Elapsed time
	Track number
	Track name
	Album name
	Artist name

MP3/WMA/AAC CD

Button	Information displayed on audio display
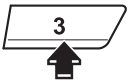	File number/Elapsed time
	Folder number/File number
	File name
	Folder name
	Album name
	Song name
	Artist name

NOTE

- The information viewable in the display is only CD information (such as artist name, song title) which has been recorded to the CD.
- This unit cannot display some characters. Characters which cannot be displayed are indicated by an asterisk (*).

Display scroll

Only 13 characters can be displayed at one time. To display the rest of the characters of a long title, press and hold the text button (3). The display scrolls the next 13 characters. Press and hold the text button (3) again after the last 13 characters have been displayed to return to the beginning of the title.

NOTE

The number of characters which can be displayed is restricted.

Message display

If “CHECK CD” is displayed, it means that there is some CD malfunction. Check the CD for damage, dirt, or smudges, and then properly reinsert it. If the message appears again, insert another known good CD. If the message continues to appear, take the unit to an expert repairer, we recommend an Authorised Mazda Repairer for service.

▼How to use Auxiliary jack/USB port

Audio can be heard from the vehicle's speakers by connecting a commercially-available portable audio unit to the auxiliary jack.
Use a commercially-available, non-impedance (3.5ϕ) stereo mini plug lead.
Contact an expert repairer, we recommend an Authorised Mazda Repairer for details.
In addition, audio can be played from the vehicle audio device by connecting a USB device to the USB port.
Refer to AUX/USB mode on page 5-71.

▼Error Indications

If you see an error indication on the audio display, find the cause in the chart. If you cannot clear the error indication, take the vehicle to an expert repairer, we recommend an Authorised Mazda Repairer.

Indication	Cause	Solution
CHECK CD	CD is inserted upside down	Insert the CD properly. If the error indication continues to display, consult an expert repairer, we recommend an Authorised Mazda Repairer.
	CD is defective	Insert another CD properly. If the error indication continues to display, consult an expert repairer, we recommend an Authorised Mazda Repairer.

Audio set [Type C/Type D (touchscreen)]

NOTE
The explanation of functions described in this manual may differ from the actual operation, and the shapes of screens and buttons and the letters and characters displayed may also differ from the actual appearance. **Additionally, depending on future software updates, the content may successively change without notice.**

Audio Set (Type C/Type D) has three different human interfaces.

- Commander switch
- Touch panel
- Voice recognition with steering switch and microphone

Commander switch operation

NOTE
For safety reasons, some operations are disabled while the vehicle is being driven.

Volume dial operation

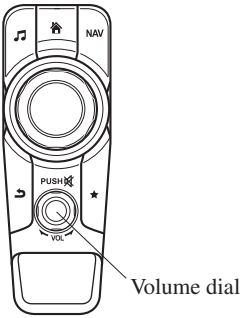

Press the volume dial to switch the audio MUTE on and off.
Turn the volume dial to adjust the volume. The volume increases by turning the dial clockwise, and decreases by turning it anticlockwise.

Switches around commander knob

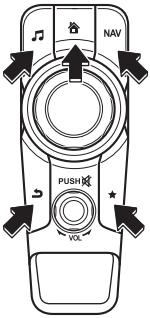

The following operations can be done by pressing the switches around the commander knob.

: Displays the home screen.

: Displays the Entertainment screen.

NAV : Displays the Navigation screen (Only navigation-equipped vehicles). For operation of the Navigation screen, refer to the navigation system manual. If the SD card for the navigation system is not inserted, the compass indicating the direction in which the vehicle is moving is displayed.

★ : Displays the Favourites screen. Long-press to store particular items in Favourites. (Radio, phonebook and destination of the navigation system can be programmed.)

: Returns to previous screen.

Commander knob operation

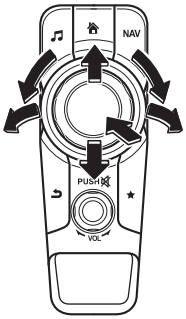

(Selection of icons on screen)

1. Tilt or turn the commander knob and move the cursor to the desired icon.
2. Press the commander knob and select the icon.

NOTE

Long-press operation of the commander knob is also possible for some functions.

Touch panel operation

⚠ CAUTION

Do not press the screen strongly or press it with a sharp-pointed object. Otherwise, the screen could be damaged.

NOTE

For safety reasons, operation of the centre display is disabled while the vehicle is being driven. However, items not displayed in grey can be operated using the commander switch while the vehicle is being driven.

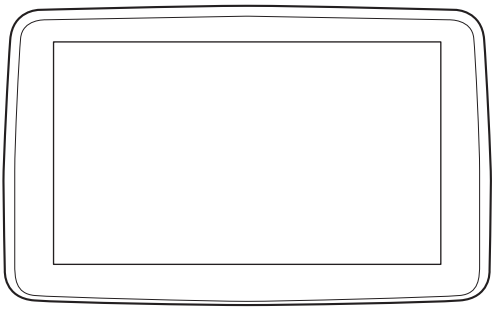

▼Basic Operation Method

TOUCH & TAP

1. Touch or tap on the item indicated on the screen.
2. The operation is launched and the next item is displayed.

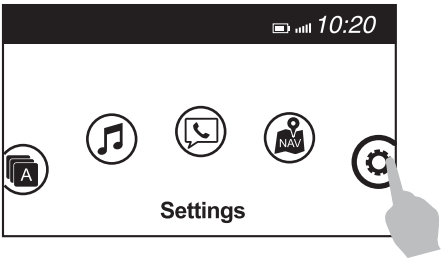

SLIDE

1. Touch the setting item displaying a slider bar.
2. Touch the slider with your finger and move to the desired level.

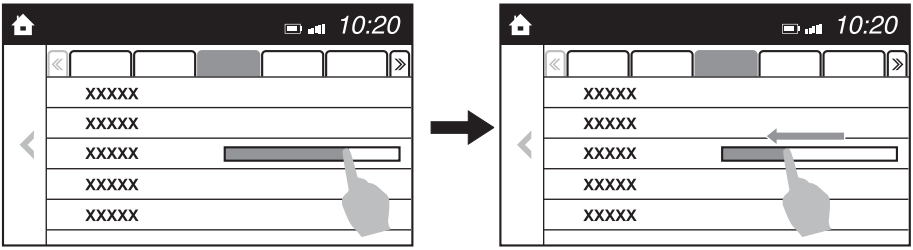

SWIPE

1. Touch the screen with your finger and move up or down.
2. Items which were not displayed can be displayed.

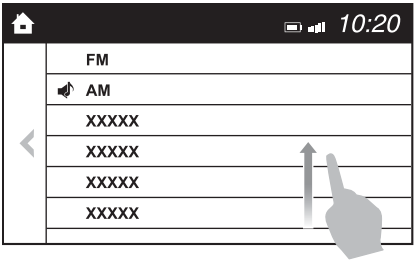

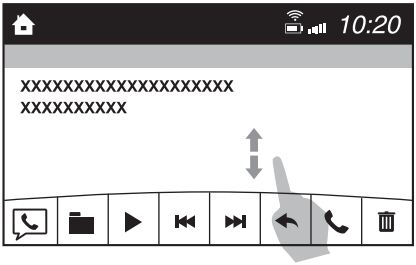

Return to previous screen

1. Touch the .

Displaying the home screen

1. Touch the .

▼Home screen

Icon	Function
	Applications Information such as average fuel economy, maintenance, and warnings can be verified. Depending on the grade and specification, the screen display may differ.
	Entertainment Operates audio such as the radio and CDs. The audio source most recently used is displayed. An audio source which cannot be used at that time is skipped and the previous audio source is displayed. To change the audio source, select the icon displayed at the bottom of the screen.
	Communication Bluetooth® related functions are available.
	Navigation Navigation screen is displayed (vehicles with navigation system). If the SD card for the navigation system is not inserted, the compass indicating the direction in which the vehicle is moving is displayed. The compass may not indicate the correct bearing when the vehicle is stopped or travelling at a slow speed.
	Settings Overall setting menu (Such as display, sound, Bluetooth® and Language). Depending on the grade and specification, the screen display may differ.

▼Volume/Display/Sound Controls

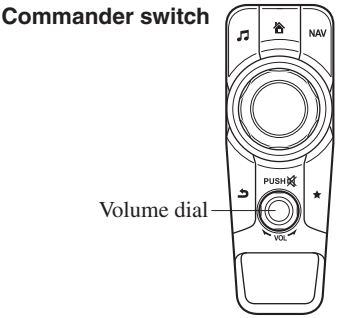

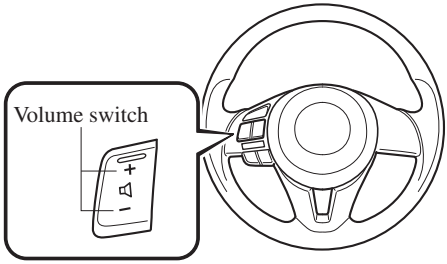

Volume adjustment

Turn the commander switch volume dial. The volume switch on the steering switch can also be pressed.

Display setting

Select the ⚙ icon on the home screen to display the Settings screen.
Select the Display tab to select the item you would like to change.

Display OFF/Clock

The centre display can be turned off.
Select Turn Display Off to turn the display off.
When Turn Display Off and Show Clock is selected the centre display turns off and the clock is displayed.
The centre display can be turned back on as follows:

- Touch the centre display.
- Operate the commander switch.

Daytime/nighttime (Mode) screen setting

The daytime or nighttime screen can be selected.

Auto : Switches screen automatically according to headlight illumination condition*1

Day : Daytime screen setting

Night : Nighttime screen setting

*1 The display is constantly on daytime screen when the illumination dimmer is cancelled.

Brightness adjustment

Adjust the centre display brightness using the slider.

Contrast adjustment

Adjust the centre display contrast using the slider.

Display setting reset

All of the screen setting values can be reset to their initial settings.

1. Select Reset.
2. Select Yes.

Audio sound adjustment

Select the icon on the home screen to display the Settings screen.

Select the Sound tab to select the item you would like to change.

Indication	Setting value
Bass (Low pitch sound)	+ Side: Low pitch enhancement − Side: Low pitch reduction
Treble (Treble sound)	+ Side: Treble enhancement − Side: Treble reduction
Fade (Front/Rear volume balance)	Front: Front speaker volume enhancement Rear: Rear speaker volume enhancement
Balance (Left/right volume balance)	Right: Right speaker volume enhancement Left: Left speaker volume enhancement
ALC (Automatic volume adjustment)	Off—Adjustment at seven levels
Beep (Audio operation sound)	On/Off

ALC (Automatic volume adjustment)
The automatic level control (ALC) is a feature that automatically adjusts audio volume and sound quality according to the vehicle speed. The volume increases in accordance with the increase in vehicle speed, and decreases as vehicle speed decreases.

▼Operating the Radio (Type C)

Radio ON

Select the icon on the home screen to display the Entertainment screen. When selecting the desired radio, the following icons are indicated in the lower part of the centre display.
AM/FM Radio

Icon	Function
	Displays the Entertainment menu. Use to switch to a different audio source.
	Displays the station list. Select Update Station List to display the frequencies of up to ten radio stations on the auto memory preset list. Select the desired frequency.
	Displays the Favourites list. Long-press to store radio station currently being aired.
	You can search for receivable radio stations. Scanning stops at each station for about five seconds. Select again to continue receiving the radio station.
	You can change the radio frequency manually. Rotate the commander knob, slide the screen, or touch the radio frequency. Press ◀ or ▶ to change the radio frequency one step at a time. When ◀ or ▶ is long-pressed, the radio frequency changes continually. It stops when you remove your hand from the icon or the commander knob.
	Automatic radio station selection. When long-pressed, the radio frequency changes continually. It stops when you remove your hand from the icon or the commander knob.
	Displays sound settings to adjust audio quality level. Refer to Volume/Display/Sound Controls on page 5-50.

Favourites Radio

Selected stations can be registered for convenient operation. Up to 50 stations can be registered. The Favourites list is common to AM and FM radio.

Registering to Favourites

Long-press the ★ icon to register the current radio station. The registration can also be performed using the following procedure.

1. Select the ★ icon to display the Favourites list.
2. Select Add/Edit Radio Favourites.
3. Select Add <active station>.
4. The station is added to the bottom of the Favourites list.

NOTE
If the battery is disconnected, your Favourites list will not be deleted.

Selecting radio station from Favourites

1. Select the ★ icon to display the Favourites list.
2. Select the radio frequency to tune in the radio station.

Deleting from Favourites

1. Select the ★ icon to display the Favourites list.
2. Select Add/Edit Radio Favourites.
3. Select Delete.
4. Select the radio frequency you want to delete.
5. Select Delete.

Changing Favourites list order

1. Select the ★ icon to display the Favourites list.
2. Select Add/Edit Radio Favourites.
3. Select Move.
4. Select a radio frequency. The selected radio station can be moved.
5. Slide the radio station or move it using the commander switch, then select OK.

▼Operating the Radio (Type D)

Radio ON

Select the ♫ icon on the home screen to display the Entertainment screen. When selecting the desired radio, the following icons are indicated in the lower part of the centre display.
AM/FM Radio

Icon	Function
	Displays the Entertainment menu. Use to switch to a different audio source.
	Displays the list of receivable RDS radio stations (FM only).
	Displays the station list (AM only). Select Update Station List to display the frequencies of up to ten radio stations on the auto memory preset list. Select the desired frequency.
	Displays the Favourites list. Long-press to store radio station currently being aired.
	You can search for receivable radio stations. Scanning stops at each station for about five seconds. Select again to continue receiving the radio station.
	You can change the radio frequency manually. Rotate the commander knob, slide the screen, or touch the radio frequency. Press ◀ or ▶ to change the radio frequency one step at a time. When ◀ or ▶ is long-pressed, the radio frequency changes continually. It stops when you remove your hand from the icon or the commander knob.
TA	Switches the TA mode on and off.
	Automatic radio station selection. When long-pressed, the radio frequency changes continually. It stops when you remove your hand from the icon or the commander knob.
	Displays the FM settings screen (FM only). On/Off of Alternative frequency and Region lock can be set.
	Displays sound settings to adjust audio quality level. Refer to Volume/Display/Sound Controls on page 5-50.

NOTE
When the ⏮ or ⏭ icon is selected while FM is selected, each programme is selected.

Favourites Radio

Selected stations can be registered for convenient operation. Up to 50 stations can be registered. The Favourites list is common to AM, FM and DAB radio.

Registering to Favourites

Long-press the ★ icon to register the current radio station. The registration can also be performed using the following procedure.

1. Select the ★ icon to display the Favourites list.
2. Select Add/Edit Radio Favourites.
3. Select Add <active station>.
4. The station is added to the bottom of the Favourites list.

NOTE
If the battery is disconnected, your Favourites list will be not deleted.

Selecting radio station from Favourites

1. Select the ★ icon to display the Favourites list.
2. Select the radio frequency to tune in the radio station.

Deleting from Favourites

1. Select the ★ icon to display the Favourites list.
2. Select Add/Edit Radio Favourites.
3. Select Delete.
4. Select the radio frequency you want to delete.
5. Select Delete.

Changing Favourites list order

1. Select the ★ icon to display the Favourites list.
2. Select Add/Edit Radio Favourites.
3. Select Move.
4. Select a radio frequency. The selected radio station can be moved.
5. Slide the radio station or move it using the commander switch, then select OK.

Radio Data System (RDS)

Alternative frequency (AF)

AF functions on FM stations. Turn on the AF mode. If the radio reception of the current station weakens, the system switches to an alternative station automatically.
If you wish to continue a regional programme, turn on the Region lock (REG) mode.

AF/REG on or off switching

Select the ⚙ icon while in FM mode to switch to the FM settings screen. AF/REG on or off switching can be performed as follows:
(AF mode on/off)
Select On/Off on the FM settings screen.
(REG mode on/off)
While the AF mode is on, select On/Off.

Traffic announcement (TA)

Select TA during FM/AM reception to switch to the TA mode.
If a TA broadcast is received while in the TA mode, the TA broadcast intercedes even while using other functions (FM, CD, USB device, AUX, BT audio, Aha™ radio, or Stitcher™ radio), and “Traffic Announcement” is displayed.
If a TA is received on the Entertainment screen, Cancel is displayed on the screen. Select Cancel to cancel the received TA and return to TA reception stand-by. If a TA is received on a screen other than the Entertainment screen, the selection screens for TA Off, Cancel, and Close are displayed on the screen. If Close is selected, the selection screen turns off when a TA is received while continuing to receive TAs.

Selection from Station List

List of receivable RDS radio stations is displayed. You can easily select the station you want to listen to from the list. If a radio station name is not available, the frequency is displayed. In addition, radio stations which have been programmed to a Genre code (Programme types like Rock, News, and so on) can also be displayed separately by category.

NOTE

It may take longer to display the station list depending on the reception conditions.

1. Select the ☰ icon to display the radio station list.
2. Select the radio frequency to tune in the radio station.

(Selecting Genre)

1. Select the Genre on the station list screen to display the genre list screen.
2. Select the genre to display the radio station list in the genre.

NOTE

Only one Genre can be selected.

▼Operating the Digital Audio Broadcasting (DAB) Radio (Type D)*

What is DAB radio?

DAB radio is a digital broadcasting system for radio.
DAB radio provides a high-quality radio sound source using an auto frequency switching function in boundary areas.
By displaying the radio text, information such as the song name and artist name can be displayed.

NOTE
This unit is also compatible with DAB+ radio.

*Some models.

Radio ON

1. Select on the home screen to display the Entertainment screen.
2. Select DAB, the following icons are displayed at the bottom of the screen.

Icon	Function
	Displays the Entertainment menu. Use to switch to a different audio source.
	Displays the station list (ensemble and station). Select Update List to update the station list. Select Select Ensemble to select the ensemble you want to display.
	Displays the favourites list. Press and hold to store the currently tuned station to the favourites list. Refer to Operating the Radio (Type D) on page 5-54.
	Searches your desired station from the station list. Tunes to each station in the station list for 10 seconds. Select again when your desired station is tuned. **NOTE** If the station list is not available, it switches to the station list update screen. Perform the station list updating.
TA	Switches the TA mode on and off. Refer to Operating the Radio (Type D) on page 5-54.
	Returns to the previous station. Touch and hold to return to the top station in the previous ensemble.
	Goes to the next station. Touch and hold to go to the top station in the next ensemble.
	Displays the DAB radio setting screen.
	Displays sound settings to adjust audio quality level. Refer to Volume/Display/Sound Controls on page 5-50.

Example of use (Update station list and listen to DAB radio)

1. Select the ☰ icon and display the following screen.

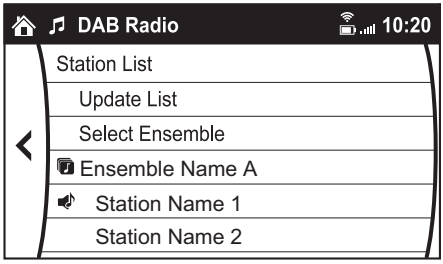

2. Select Update List to update the station list.
3. Select Select Ensemble to select the ensemble you want to display.
4. Select a desired station to start radio reception.

DAB radio setting

1. Select the ⚙ icon while using DAB radio.
2. Select the desired item and perform the setting.
   The items which can be set are as follows:

Item	Setting	Function
BAND Settings	Band III/L Band/Both	Frequency band can be changed.
DAB-FM Link	On/Off	On: If the reception condition is bad, an FM station which is providing the same broadcast is searched and switched to.
DAB-DAB Link	On/Off	On: If the reception condition is bad, a DAB station which is providing the same broadcast is searched and switched to.
Radio Text	On/Off	On: Radio text is displayed.

NOTE

- The radio text may not be displayed depending on the radio station.
- The radio text cannot be displayed in DAB-FM mode.
- If there is no DAB radio signal, “Signal Lost” is displayed on the screen. Change the ensemble or radio station, or perform station list updating.

▼Operating the Compact Disc (CD) Player*

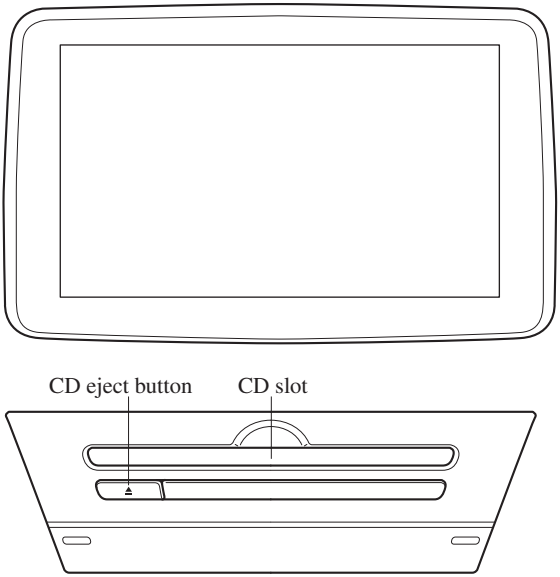

Type	Playable data
Music/MP3/WMA/ AAC CD player	•Music data (CD-DA) •MP3/WMA/AAC file

NOTE

If a disc has both music data (CD-DA) and MP3/WMA/AAC files, playback of the two or three file types differs depending on how the disc was recorded.

Inserting the CD

Insert the CD into the slot, label-side up. The auto-loading mechanism will set the CD and begin play.

NOTE

There will be a short lapse before play begins while the player reads the digital signals on the CD.

Ejecting the CD

Press the CD eject button (⏏) to eject the CD.

*Some models.

Playback

Select the icon on the home screen with a CD inserted and display the Entertainment screen. When CD is selected, the following icons are indicated in the lower part of the centre display.

Icon	Function
	Displays the Entertainment menu. Use to switch to a different audio source.
	(Music CD) Displays the track list of the CD. Select the track you want to play. **(MP3/WMA/AAC CD)** Displays the top level folder/file list. Select the folder you want to select. The files in the selected folder are displayed. Select the file you want to play.
	(MP3/WMA/ACC CDs only) Displays the file list of the folder currently being played. Select the song you want to listen to.
	(Music CD) Replays the song currently being played repeatedly. Select it again to cancel. **(MP3/WMA/AAC CD)** Replays the song currently being played repeatedly. When selected again, the songs in the folder are played repeatedly. Select it again to cancel.
	(Music CD) Plays songs on the CD in random order. Select it again to cancel. **(MP3/WMA/AAC CD)** Plays songs in the folder in random order. When selected again, the songs on the CD are played in random order. Select it again to cancel.
	(Music CD) The beginning of each track on a CD is played to aid in searching for a desired track. When selected again, the operation is cancelled and the song currently being played continues. **(MP3/WMA/AAC CD)** The beginning of each track in a folder is played to aid in searching for a desired track. When selected again, the operation is cancelled and the song currently being played continues. If the audio is operated during scan-play, the track being scan-played is played normally. Then, the audio operation is performed.

Icon	Function
	If selected within a few seconds of a song which has started to play, the previous song is selected. If more than a few seconds have elapsed after a song has begun to play, the song currently being played is replayed from the beginning. Long-press to fast reverse. It stops when you remove your hand from the icon or the commander knob.
	Plays a CD. When selected again, playback is temporarily stopped.
	Advances to the beginning of the next song. Long-press to fast forward. It stops when you remove your hand from the icon or the commander knob.
	Displays sound settings to adjust audio quality level. Refer to Volume/Display/Sound Controls on page 5-50.

Example of use (When searching for a song from the top level of an MP3/WMA/AAC CD)

1. Select the icon to display the folder/file list at the top level.

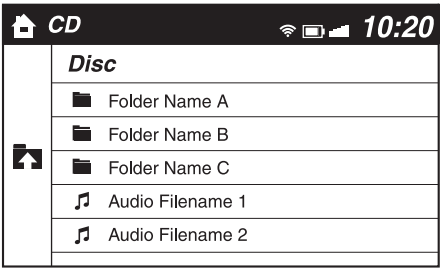

2. When the folder is selected, folders/file lists in the folder are displayed.
3. Select the desired song.

NOTE

- Select to move to a folder one level higher.
- The appearance of the repeat and shuffle icons changes depending on the type of operation in which the function is used.

MEMO

▼Operating the Digital Versatile Disc (DVD) Player*

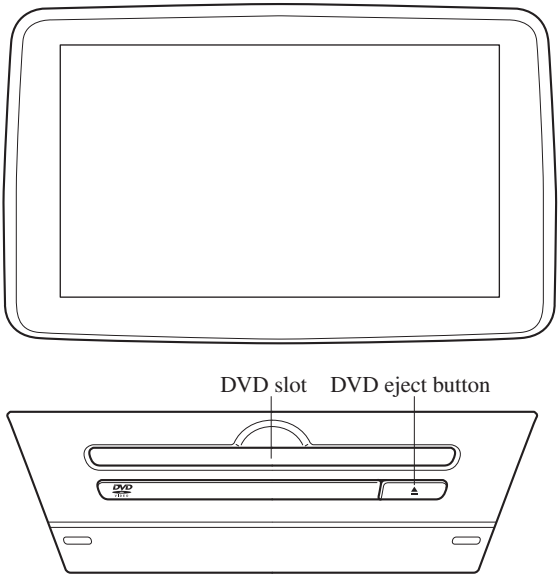

Type	Playable data
DVD VIDEO/DVD-VR player	DVD VIDEO/DVD-VR file

Inserting the DVD

Insert the DVD into the slot, label-side up. The DVD is inserted automatically and the top menu screen of the DVD disc and controller are displayed.

NOTE
There will be a short lapse before play begins while the player reads the digital signals on the DVD.

Ejecting the DVD

Press the DVD eject button (⏏) to eject the DVD.

*Some models.

Playback

Select the icon on the home screen with a DVD inserted and display the Entertainment screen. When DVD is selected, the DVD top menu screen and the controller are displayed. When starting the playback by operating the controller, the following icons are displayed at the bottom of the screen.

Icon	Function
	Displays the Entertainment menu. Use to switch to a different audio source.
	Returns to the DVD menu screen.
	Returns to the beginning of the previous chapter if the icon is selected within a few seconds after the playback of the current chapter has started. Returns to the beginning of the current chapter if the icon is selected a few seconds after the playback of the current chapter has started. Long-press during playback to fast reverse. Long-press during pause to play in reverse in slow motion. It stops when you remove your hand from the icon or the commander knob.
	Plays the DVD. Select again to pause the playback.
	Advances to the beginning of the next chapter. Long-press during playback to fast forward. Long-press during pause to play in slow motion. It stops when you remove your hand from the icon or the commander knob.
	Changes camera angle each time the icon is selected (usable DVDs only).
	Changes display/non-display of the sub titles (usable DVDs only).
	Changes the parental lock setting. Parental lock level and PIN code setting changes are possible.
	Pauses the playback and displays the DVD setting screen. Select Audio Settings to adjust the sound quality. Refer to Volume/Display/Sound Controls on page 5-50. Select Aspect Ratio to change the aspect ratio (horizontal to vertical ratio of the screen). 16:9 Widescreen, 4:3 Letterbox, and 4:3 Pan-scan are available.
	Adjusts the screen. Displays the video setting screen at the bottom of the screen.

NOTE

- For safety reasons, images are not displayed while the vehicle is being driven.
- Slide the ||||||| of the controller to move the controller.
- If the mode is switched to DVD mode once the DVD playback has stopped, the playback restarts without displaying the DVD menu screen.

Setting DVD functions

Sound quality and aspect ratio settings can be performed.

Setting sound quality

1. Select the ⚙ icon.
2. Select Audio Settings to adjust the sound quality.
   Refer to Volume/Display/Sound Controls on page 5-50.

Setting aspect ratio

1. Select the ⚙ icon.
2. Select Aspect Ratio.
3. Select a desired aspect ratio.

Setting image quality

Brightness, contrast, tint, colour density can be adjusted.

When the icon is selected, the following tabs are displayed at the bottom of the screen.

Tab	Function
Brightness	Screen brightness can be adjusted using the slider.
Contrast	Screen contrast can be adjusted using the slider.
Tint	Colour tone of the screen can be adjusted using the slider.
Colour	Screen colour can be adjusted using the slider.
Reset	Screen settings can be reset to initial values. Select Reset.

▼How to use Auxiliary jack/USB port

Audio can be heard from the vehicle's speakers by connecting a commercially-available portable audio unit to the auxiliary jack.
Use a commercially-available, non-impedance (3.5ϕ) stereo mini plug lead.
In addition, audio can be played from the vehicle audio device by connecting a USB device to the USB port.
Refer to AUX/USB mode on page 5-71.

▼Settings

NOTE
Depending on the grade and specification, the screen display may differ.

Select the icon on the home screen and display the Settings screen.
Switch the tab and select the setting item you want to change.
You can customize settings in the setup display as follows:

Tab	Item	Function
AD-Disp	Height Brightness Control Other	Refer to Active Driving Display on page 4-36.
Display	Refer to Volume/Display/Sound Controls on page 5-50.	
Safety	Smart City Brake Support Blind Spot Monitoring Volume Other	Refer to Personalisation Features on page 9-13.
Sound	Refer to Volume/Display/Sound Controls on page 5-50.	
Clock	Adjust Time	Displays the currently set time is displayed. Press + to advance the hour/minute, and select − to move the hour/minute back. AM/PM can only be selected with the 12-hour clock display.
	GPS Sync	Synchronizes with GPS when turned on. When turned off, the time can be changed from “Adjust Time”.
	Time Format	Changes the display between 12 and 24-hour clock time.
	Time Zone Select	When it's not synchronized with GPS, select the region you want to specify.
	Daylight Savings Time	Turns the daylight saving time setting on/off. When ON, the time advances 1 hour. When OFF, it returns to normal time.
Vehicle	Rain Sensing Wiper Door Lock Other	Refer to Personalisation Features on page 9-13.
Devices	Bluetooth®	Refer to Bluetooth® Preparation (Type C/Type D) on page 5-111.
	Network Management	Wi-Fi™ is used to obtain Navi POI/Real Time Traffic function (Such as gas prices, weather, nearest restaurant)

Tab	Item		Function
System	Tool Tips		Turns button explanations ON/OFF.
	Language		Changes the language.
	Temperature		Changes the setting between Fahrenheit and Celsius.
	Distance		Changes the setting between miles and kilometres.
	Music Database Update		Used to update Gracenote®. Gracenote is used with USB Audio, and provides: 1.Supplementary music information (Such as song name, artist name) 2.Voice recognition assistance for Play Artist and Play Album Gracenote can be downloaded from the Mazda Handsfree Website. Refer to Gracenote Database (Type C/Type D) on page 5-88.
	Factory Reset		Memory and settings are initialized to the factory settings. The initialization launches by selecting the Yes button.
	About	Agreements and Disclaimers	Verify the disclaimer and agree.
		Version Information	Can verify the current audio unit OS version and Gracenote Database version.

▼Applications

NOTE
Depending on the grade and specification, the screen display may differ.

Select the icon on the home screen to display the Applications screen. The following information can be verified.

Top screen	Item	Function
Fuel Economy Monitor	Fuel Consumption Control Status Effectiveness Display Settings	Refer to Fuel Economy Monitor on page 4-91.
Maintenance	Scheduled Maintenance Tyre Rotation Oil Change	Refer to Maintenance Monitor on page 6-15.
Warning Guidance	Warnings currently active can be verified.	Refer to If a Warning Light Turns On or Flashes on page 7-35.

Audio Control Switch Operation*

Without Bluetooth® Hands-Free

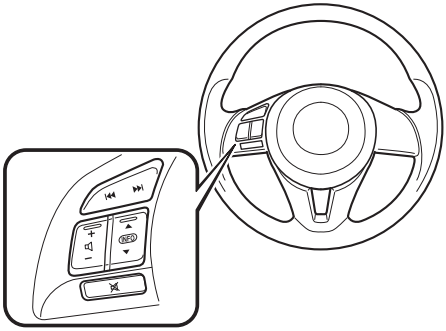

With Bluetooth® Hands-Free

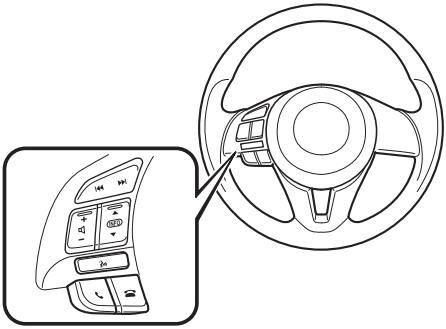

*Some models.

▼Adjusting the Volume

To increase the volume, press up the volume switch (+).
To decrease the volume, press down the volume switch (−).

▼Seek Switch

AM/FM radio (Type A/Type C/Type D), MW/LW/FM radio (Type B)

Press the seek switch (⏮, ⏭). The radio switches to the next/previous stored station in the order that it was stored.

Press and hold the seek switch (⏮, ⏭) to seek all usable stations at a higher or lower frequency whether programmed or not.

Radio stations which have been previously stored in the auto memory tuning (Type A/Type B)/favourite radio (Type C/Type D) can be called up by pressing the seek switch (⏮, ⏭) while any radio station stored in the auto memory tuning (Type A/Type B)/favourite radio (Type C/Type D) is being received. Radio stations can be called up in the order they were stored with each press of the switch (⏮, ⏭).

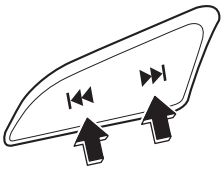

DAB radio (Type D)

Press the Seek switch (⏮, ⏭) while listening to DAB radio to call up a station previously stored to the favourites list. With each operation of the switch, radio stations can be called up in the order they were stored.

Press and hold the seek switch (⏭) to go to the next station, (⏮) to return to the previous station.

USB Audio/Bluetooth® Audio /CD

Press the seek switch (⏭) to skip forward to the beginning of the next track.

Press the seek switch (⏮) within a few seconds after playback begins to track down to the beginning of the previous track.

Press the seek switch (⏮) after a few seconds have elapsed to start playback from the beginning of the current track.

Press and hold the seek switch (⏮, ⏭) to continuously switch the tracks up or down.

DVD (Type C)

Press the seek switch (⏭) to skip forward to the beginning of the next chapter.

Press the seek switch (⏮) to return to the beginning of the previous chapter.

Aha™/Stitcher™ Radio (Type C/Type D)

Press the seek switch (⏭) to skip forward to the beginning of the next track.

Press and hold the seek switch (⏭) to evaluate the playback of the current song as “Like”.

Press and hold the seek switch (⏮) to evaluate the playback of the current song as “Dislike”.

▼Mute Switch*

Press the mute switch (🔇) once to mute audio, press it again to resume audio output.

NOTE
If the ignition is switched off with the audio muted, the mute will be cancelled. Therefore, when the engine is restarted, the audio is not muted. To mute the audio again, press the mute switch (🔇).

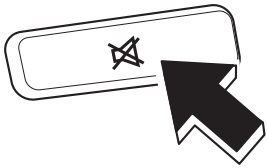

AUX/USB mode

Audio can be heard from the vehicle's speakers by connecting a commercially-available portable audio unit to the auxiliary jack.
A commercially-available, non-impedance (3.5ϕ) stereo mini plug lead is required.
Contact an expert repairer, we recommend an Authorised Mazda Repairer for details.
In addition, audio can be played from the vehicle audio device by connecting a USB device to the USB port.

NOTE
(Type C/Type D) The SD card slot is for the navigation system. For vehicles with the navigation system, the SD card (Mazda genuine) with stored map data is inserted into the SD card slot and used.

*Some models.

Type A/Type B (Without CD player)

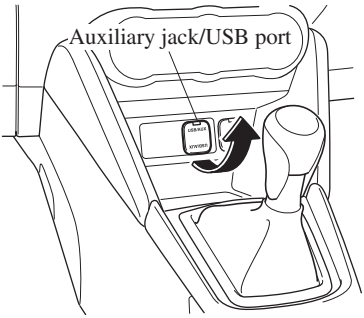

Type A/Type B (With CD player)

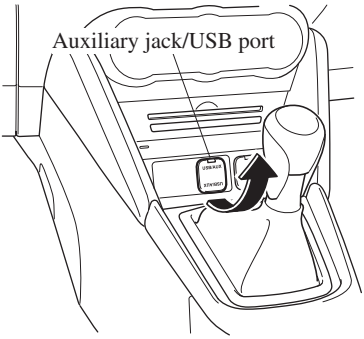

Type C/Type D (Without DVD/CD player)

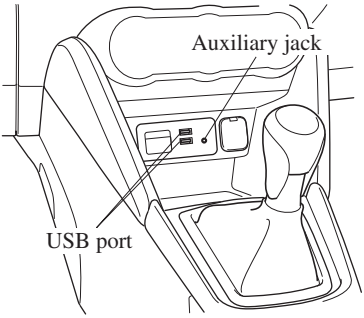

Type C/Type D (With DVD/CD player)

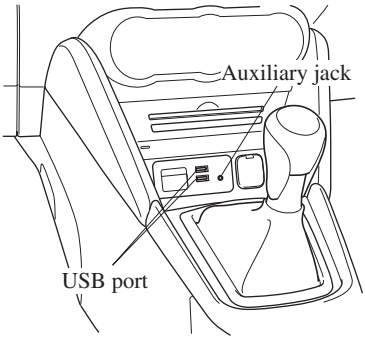

① How to use AUX mode (Type A/Type B) ..... page 5-75
② How to use USB mode (Type A/Type B) ..... page 5-76
③ How to use iPod mode (Type A/Type B) ..... page 5-80
④ How to use AUX mode (Type C/Type D) ..... page 5-84
⑤ How to use USB mode (Type C/Type D) ..... page 5-84

⚠ *WARNING*

Do not adjust the portable audio unit or a similar product while driving the vehicle:
Adjusting the portable audio unit or a similar product while driving the vehicle is dangerous as it could distract your attention from the vehicle operation which could lead to a serious accident. Always adjust the portable audio unit or a similar product while the vehicle is stopped.

⚠ CAUTION

Depending on the portable audio device, noise may occur when the device is connected to the vehicle accessory socket. (If noise occurs, do not use the accessory socket.)

NOTE

- This mode may not be usable depending on the portable audio device to be connected.
- Before using the auxiliary jack/USB port, refer to the instruction manual for the portable audio device.
- Use a commercially-available, non-impedance (3.5ϕ) stereo mini plug for connecting the portable audio unit to the auxiliary jack. Before using the auxiliary jack, read the manufacturer's instructions for connecting a portable audio unit to the auxiliary jack.
- To prevent discharging of the battery, do not use the auxiliary input for long periods with the engine off or idling.
- When connecting a device to the auxiliary jack or USB port, noise may occur depending on the connected device. If the device is connected to the vehicle's accessory socket, the noise can be reduced by unplugging it from the accessory socket.

▼How to connect USB port/ Auxiliary jack

Type A/Type B (Without CD player)

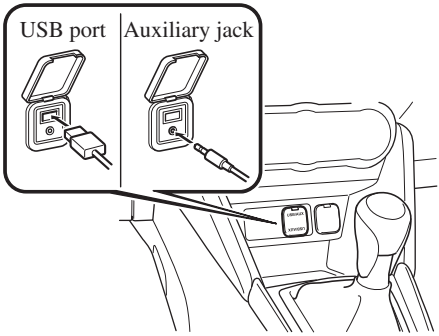

Type A/Type B (With CD player)

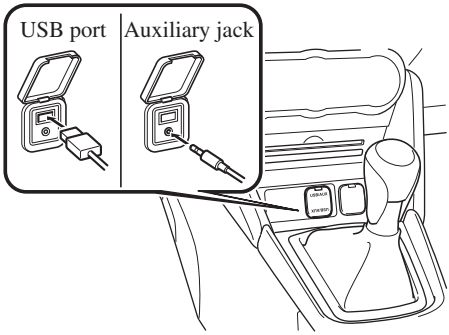

Type C/Type D (Without DVD/CD player)

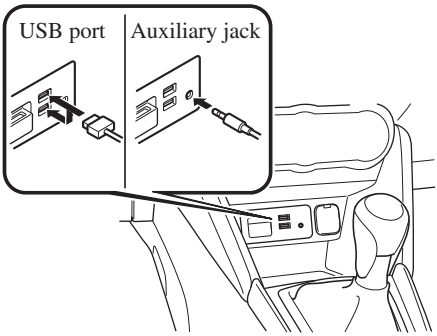

Type C/Type D (With DVD/CD player)

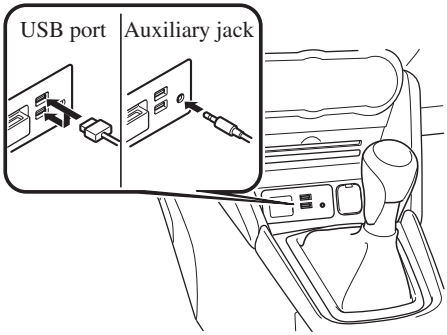

Connecting a device

1. If there is a cover on the AUX jack or USB port, remove the cover.
2. Connect the connector on the device to the USB port.

Connecting with a connector lead

1. If there is a cover on the AUX jack or USB port, remove the cover.
2. Connect the device plug/connector lead to the auxiliary jack/USB port.

⚠ *WARNING*

Do not allow the connection plug cord to get tangled with the parking brake or the shift lever (manual transaxle)/ selector lever (automatic transaxle):
Allowing the plug cord to become tangled with the parking brake or the shift lever (manual transaxle)/ selector lever (automatic transaxle) is dangerous as it could interfere with driving, resulting in an accident.

⚠ CAUTION

Do not place objects or apply force to the auxiliary jack/USB port with the plug connected.

NOTE

- Insert the plug into the auxiliary jack/ USB port securely.
- Insert or pull out the plug with the plug perpendicular to the auxiliary jack/USB port hole.
- Insert or remove the plug by holding its base.

▼How to use AUX mode (Type A/ Type B)

1. Switch the ignition to ACC or ON.
2. Press the power/volume dial to turn the audio system on.
3. Press the media button (**MEDIA**) of the audio unit to change to the AUX mode.

NOTE

- When the device is not connected to the auxiliary jack, the mode does not switch to the AUX mode.
- Adjust the audio volume using the portable audio device or audio unit.
- Audio adjustments other than audio volume can only be done using the portable audio device.
- If the connection plug is pulled out from the auxiliary jack while in AUX mode, noise may occur.

▼How to use USB mode (Type A/Type B)

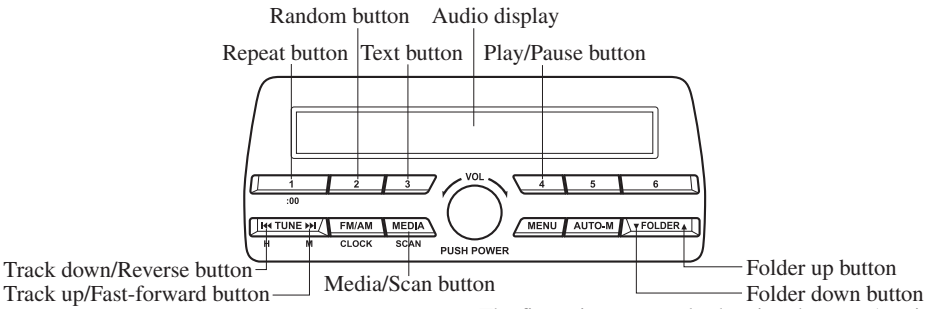

The figure is an example showing the type A unit.

Type	Playable data
USB mode	MP3/WMA/AAC file

This unit does not support a USB 3.0 device. In addition, other devices may not be supported depending on the model or OS version.

Playback

1. Switch the ignition to ACC or ON.
2. Press the power/volume dial to turn the audio system on.
3. Press the media button (**MEDIA**) to switch to the USB mode and start playback.

NOTE

- Some devices such as smart phones may require a setting change to allow operation using a USB connection.
- When the USB device is not connected, the mode does not switch to USB mode.
- When there is no playable data in the USB device, “NO CONTENTS”is flashed.

NOTE

- Playback of the USB device is in the order of the folder numbers. Folders which have no MP3/WMA/AAC files are skipped.
- Do not remove the USB device while in the USB mode. The data may be damaged.

Pause

To stop playback, press the play/pause button (4).
Press the button again to resume playback.

Fast-forward/Reverse

Press and hold the fast-forward button (▶▶I) to advance through a track at high speed.

Press and hold the reverse button (I◀◀) to reverse through a track at high speed.

Track search

Press the track up button (⏭) once to skip forward to the beginning of the next track.

Press the track down button (⏮) within a few seconds after playback begins to track down to the beginning of the previous track.

Press the track down button (⏮) after a few seconds have elapsed to start playback from the beginning of the current track.

Folder search

To change to the previous folder, press the folder down button (▼), or press the folder up button (▲) to advance to the next folder.

Music scan

This function scans the titles in a folder currently being played and plays ten seconds of each song to aid you in finding a song you want to listen to.

Press and hold the scan button (MEDIA) during playback to start the scan play operation (the track number will flash). Press and hold the scan button (MEDIA) again to cancel scan playback.

NOTE
If the unit is left in scan, normal playback will resume where scan was selected.

Repeat playback

Track repeat

1. Press the repeat button (1) during playback to play the current track repeatedly. “TRACK RPT” is displayed (♫ is displayed next to RPT at the bottom of the display area).
2. To cancel the repeat playback, press the button again after 3 seconds.

Folder repeat

1. Press the repeat button (1) during playback, and then press the button again within 3 seconds to play the tracks in the current folder repeatedly. “FOLDER RPT” is displayed (🗁 is displayed next to RPT at the bottom of the display area).
2. Press the button again to cancel the repeat playback.

Random playback

Tracks are randomly selected and played.

Folder random

1. Press the random button (2) during playback to play the tracks in the folder randomly. “FOLDER RDM” is displayed (🗁 is displayed next to RDM at the bottom of the display area).
2. To cancel the random playback, press the button again after 3 seconds.

All random

1. Press the random button (2) during playback, and then press the button again within 3 seconds to play the tracks in the USB device randomly.

   "ALL RDM" is displayed (⊛ is displayed next to RDM at the bottom of the display area).
2. Press the button again to cancel the random playback.

Switching the display

The information displayed on the audio display changes as follows each time the text button (3) is pressed during playback.

Button	Information displayed on audio display
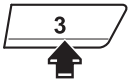	File number/Elapsed time
	Folder number/File number
	File name
	Folder name
	Album name
	Song name
	Artist name

NOTE

- The information (artist name, music name) is displayed only when the USB device information in the USB device has information which can be displayed on the screen.
- This unit cannot display some characters. Characters which cannot be displayed are indicated by an asterisk (*).

Display scroll

Only 13 characters can be displayed at one time. To display the rest of the characters of a long title, press and hold the text button (3). The display scrolls the next 13 characters. Press and hold the text button (3) again after the last 13 characters have been displayed to return to the beginning of the title.

NOTE

The number of characters which can be displayed is restricted.

Error Messages

When the message "CHECK USB" is displayed, it indicates that there is some error in the USB device. Verify that the content recorded in the USB device has MP3/WMA/AAC files and re-connect correctly. If the message reappears, have the unit checked by an Authorised Mazda Repairer.

MEMO

▼How to use iPod mode (Type A/Type B)

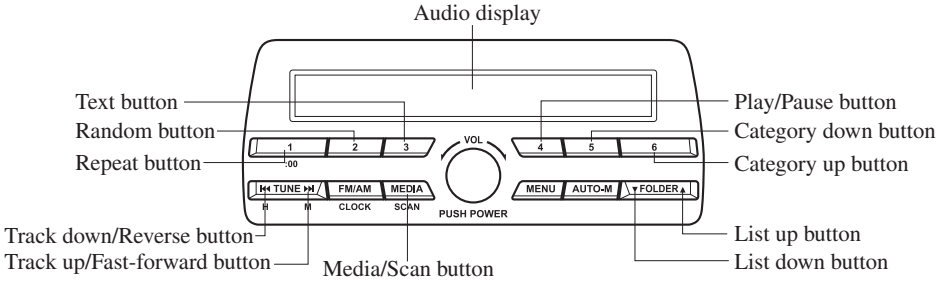

The figure is an example showing the type A unit.

An iPod may not be compatible depending on the model or OS version. In this case, an error message is displayed.

NOTE

The iPod functions on the iPod cannot be operated while it is connected to the unit because the unit controls the iPod functions.

NOTE

- When an iPod is not connected, the mode does not switch to the iPod mode.
- When there is no playable data in the iPod, “NO CONTENTS” is flashed.
- Do not remove the iPod while in the iPod mode. Otherwise, the data could be damaged.

Playback

1. Switch the ignition to ACC or ON.
2. Press the power/volume dial to turn the audio system on.
3. Press the media button (**MEDIA**) to switch to the iPod mode and start playback.

Pause

To stop playback, press the play/pause button (4).
Press the button again to resume playback.

Fast-forward/Reverse

Press and hold the fast-forward button (▶▶I) to advance through a track at high speed.

Press and hold the reverse button (I◀◀) to reverse through a track at high speed.

Track search

Press the track up button (⏭) once to skip forward to the beginning of the next track.

Press the track down button (⏮) within a few seconds (depends on iPod software version) after playback begins to track down to the beginning of the previous track.

Press the track down button (⏮) after a few seconds (depends on iPod software version) have elapsed to start playback from the beginning of the current track.

Category search

Press the category down button (5) to select the previous category and press the category up button (6) to select the next category.

NOTE
The types of categories include Playlist, Artist, Album, Song, Podcast, Genre, Composer, and Audio book.

List search

Press the list down button (▼) to select the previous list and press the list up button (▲) to select the next list.

NOTE
When the selected category is Song or Audio book, there is no list.

Music scan

This function scans the titles in a list currently being played and plays 10 seconds of each song to aid you in finding a song you want to listen to.

Press and hold the scan button (MEDIA) during playback to start the scan play operation (the track number will flash). Press and hold the scan button (MEDIA) again to cancel scan playback.

NOTE
If the unit is left in scan, normal playback will resume where scan was selected.

Repeat playback

1. Press the repeat button (1) during playback to play the current track repeatedly. “TRACK RPT” is displayed

   (♫ is displayed next to RPT at the bottom of the display area).
2. Press the button again to cancel the repeat playback.

Random playback

Tracks are randomly selected and played.

Song random

1. Press the random button (2) during playback to play the tracks in the list randomly. “SONG RDM” is displayed

   (🗀 is displayed next to RDM at the bottom of the display area).
2. To cancel the random playback, press the button again after 3 seconds.

Album random

1. Press the random button (2) during playback, and then press the button again within 3 seconds to play the tracks in the iPod randomly. “ALBUM RDM” is displayed (⊘ is displayed next to RDM at the bottom of the display area).
2. Press the button again to cancel the random playback.

NOTE

The track number being played randomly is in the order of the iPod shuffle table.

Switching the display

The information displayed on the audio display changes as follows each time the text button (3) is pressed during playback.

Button	Information displayed on audio display
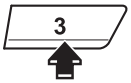	File number/Elapsed time
	File number
	Category name
	Artist name
	Album name
	Song name

NOTE

- The information (artist name, music name) is displayed only when the iPod has information which can be displayed.
- This unit cannot display some characters. Characters which cannot be displayed are indicated by an asterisk (*).

Display scroll

13 characters can be displayed at one time. To display the rest of the characters of a long title, press and hold the text button (3). The display scrolls the next 13 characters. Press and hold the text button (3) again after the last 13 characters have been displayed to return to the beginning of the title.

NOTE

The number of characters which can be displayed is restricted.

Error Messages

If the message “CHECK iPod” is displayed, it indicates that there is a malfunction in the iPod. Verify that the content recorded in the iPod has playable files and connect correctly. If the message reappears, have the unit checked by an Authorised Mazda Repairer.

▼Error Indications (Type A/Type B)

If you see an error indication on the display, find the cause in the chart. If you cannot clear the error indication, take the vehicle to an expert repairer, we recommend an Authorised Mazda Repairer.

Indication	Cause	Solution
CHECK USB	USB device malfunction	Verify that the content recorded in the USB device has MP3/WMA/AAC files and re-connect correctly. If the error indication continues to display, consult an expert repairer, we recommend an Authorised Mazda Repairer.
CHECK iPod	iPod malfunction	Verify that the content recorded in the iPod has playable files and re-connect correctly. If the error indication continues to display, consult an expert repairer, we recommend an Authorised Mazda Repairer.

▼How to use AUX mode (Type C/Type D)

1. Select the icon on the home screen to display the Entertainment screen.
2. Select AUX to switch to the AUX mode. The following icons are displayed in the lower part of the centre display.

Icon	Function
	Displays the Entertainment menu. Use to switch to a different audio source.
	Displays sound settings to adjust audio quality level. Refer to Volume/Display/Sound Controls on page 5-50.

NOTE

- If a device is not connected to the auxiliary jack, the mode does not switch to the AUX mode.
- Adjust the audio volume using the portable audio device, commander switch, or audio control switch.
- Audio adjustments can also be made using the portable audio device's volume setting.
- If the connection plug is pulled out from the auxiliary jack while in AUX mode, noise may occur.

▼How to use USB mode (Type C/Type D)

Type	Playable data
USB mode	MP3/WMA/AAC/OGG file

This unit does not support a USB 3.0 device. In addition, other devices may not be supported depending on the model or OS version.
USB devices formatted to FAT32 are supported (USB devices formatted to other formats such as NTFS are not supported).

Playback

1. Select the icon on the home screen to display the Entertainment screen.
2. Select USB 1 or USB 2 to switch the USB mode. The following icons are displayed in the lower part of the centre display.

Icon	Function
	Displays the Entertainment menu. Use to switch to a different audio source.
	Category list is displayed.
	Current track list is displayed. Select a desired track to play it.
	Plays the current track repeatedly. Select it again to play the tracks in the current track list repeatedly. When selected again, the function is cancelled.
	Tracks in the current track list are played randomly. Select it again to cancel.
	Starts playing a track similar to the current track using Gracenote's More Like This™. Select the desired song from the category list to cancel More Like This™.
	If selected within a few seconds from the beginning of a song which has started to play, the previous song is selected. If more than a few seconds have elapsed, the song currently being played is replayed from the beginning. Long-press to fast reverse. It stops when you remove your hand from the icon or the commander knob.
	Track is played. When selected again, playback is temporarily stopped.
	Advances to the beginning of the next song. Long-press to fast forward.
	Displays sound settings to adjust audio quality level. Refer to Volume/Display/Sound Controls on page 5-50.

NOTE
• To move to the desired location on the track, move the slider indicating the playback time. • The appearance of the repeat and shuffle icons changes depending on the type of operation in which the function is used.

Category list

Select the icon to display the following category list.
Select a desired category and item.

Category	Function
Playlist	Displays playlists on the device.
Artist	Displays the artist name list. All the tracks or tracks for each album of the selected artist can be played.
Album	Displays the album name list.
Song	All the tracks in the device are displayed.
Genre	Displays the genre list. All the tracks or tracks per album or artist in the selected genre can be played.
Audiobook	Displays the audiobook list. Chapters can be selected and played.
Podcast	Displays the podcast list. Episode can be selected and played. (Special service for some Apple devices.)
Folder	Displays the folder/file list.

Example of use (to play all tracks in USB device)

(Method 1)

1. Select ☰ to display the category list.
2. Select Song.
   All the tracks in the USB device are displayed.
3. Select a desired track.
   The selected track is played. All the tracks in the USB device can be played by continuing playback.

NOTE
Only the tracks in the desired category selected in Step 2 are played.

(Method 2)*1

1. Select ☰ to display the category list.
2. Select Folder.
   All the folders in the USB device are displayed.
3. Select All Songs.
   All the tracks in the USB device are displayed.
4. Select a desired track.
   The selected track is played. All the tracks in the USB device can be played by continuing playback.

*1 Can be operated using an Android™ device or USB flash memory.

NOTE
Only the tracks in the desired folder selected in Step 3 are played.

▼Gracenote Database (Type C/Type D)

When a USB device is connected to this unit and the audio is played, the album name, artist name, genre and title information are automatically displayed if there is a match in the vehicle's database compilation to the music being played. The information stored in this device uses database information in the Gracenote music recognition service.

⚠ CAUTION

For information related to the most recent Gracenote database which can be used and how to install it, go to the Mazda Hands Free Website:
http://www.mazdahandsfree.com

Introduction

Music recognition technology and related data are provided by Gracenote®. Gracenote is the industry standard in music recognition technology and related content delivery. For more information visit www.gracenote.com.

CD and music-related data from Gracenote, Inc., copyright © 2000 to present Gracenote. Gracenote Software, copyright © 2000 to present Gracenote. One or more patents owned by Gracenote apply to this product and service. See the Gracenote website for a non-exhaustive list of applicable Gracenote patents. Gracenote, CDDB, MusicID, MediaVOCS, the Gracenote logo and logotype, and the “Powered by Gracenote” logo are either registered trademarks or trademarks of Gracenote in the United States and/or other countries.

Gracenote® End User License Agreement
This application or device contains software from Gracenote, Inc. of Emeryville, California (“Gracenote”). The software from Gracenote (the “Gracenote Software”) enables this application to perform disc and/or file identification and obtain music-related information, including name, artist, track, and title information (“Gracenote Data”) from online servers or embedded databases (collectively, “Gracenote Servers”) and to perform other functions. You may use Gracenote Data only by means of the intended End-User functions of this application or device.

You agree that you will use Gracenote Data, the Gracenote Software, and Gracenote Servers for your own personal non-commercial use only. You agree not to assign, copy, transfer or transmit the Gracenote Software or any Gracenote Data to any third party. YOU AGREE NOT TO USE OR EXPLOIT GRACENOTE DATA, THE GRACENOTE SOFTWARE, OR GRACENOTE SERVERS, EXCEPT AS EXPRESSLY PERMITTED HEREIN.
You agree that your non-exclusive license to use the Gracenote Data, the Gracenote Software, and Gracenote Servers will terminate if you violate these restrictions. If your license terminates, you agree to cease any and all use of the Gracenote Data, the Gracenote Software, and Gracenote Servers. Gracenote reserves all rights in Gracenote Data, the Gracenote Software, and the Gracenote Servers, including all ownership rights. Under no circumstances will Gracenote become liable for any payment to you for any information that you provide. You agree that Gracenote, Inc. may enforce its rights under this Agreement against you directly in its own name.
The Gracenote service uses a unique identifier to track queries for statistical purposes. The purpose of a randomly assigned numeric identifier is to allow the Gracenote service to count queries without knowing anything about who you are. For more information, see the web page for the Gracenote Privacy Policy for the Gracenote service.
The Gracenote Software and each item of Gracenote Data are licensed to you “AS IS.” Gracenote makes no representations or warranties, express or implied, regarding the accuracy of any Gracenote Data from in the Gracenote Servers. Gracenote reserves the right to delete data from the Gracenote Servers or to change data categories for any cause that Gracenote deems sufficient. No warranty is made that the Gracenote Software or Gracenote Servers are error-free or that functioning of Gracenote Software or Gracenote Servers will be uninterrupted. Gracenote is not obligated to provide you with new enhanced or additional data types or categories that Gracenote may provide in the future and is free to discontinue its services at any time.
GRACENOTE DISCLAIMS ALL WARRANTIES EXPRESS OR IMPLIED, INCLUDING, BUT NOT LIMITED TO, IMPLIED WARRANTIES OF MERCHANTABILITY, FITNESS FOR A PARTICULAR PURPOSE, TITLE, AND NON-INFRINGEMENT. GRACENOTE DOES NOT WARRANT THE RESULTS THAT WILL BE OBTAINED BY YOUR USE OF THE GRACENOTE SOFTWARE OR ANY GRACENOTE SERVER. IN NO CASE WILL GRACENOTE BE LIABLE FOR ANY CONSEQUENTIAL OR INCIDENTAL DAMAGES OR FOR ANY LOST PROFITS OR LOST REVENUES.
© 2000 to present. Gracenote, Inc.

Updating the database

The Gracenote media database can be updated using USB device.

1. Connect a USB device containing the software for updating Gracenote.
2. Select the icon on the home screen to display the Settings screen.
3. Select the System tab and select Music Database Update.
4. Select Search. The list of the update package stored in the USB device and the version are displayed.
5. Select the package to use the update.
6. Select Install.

NOTE
Gracenote can be downloaded from the Mazda Hands-free Website.

Bluetooth®*

Bluetooth® Hands-Free outline

When a Bluetooth® device (mobile phone) is connected to the vehicle's Bluetooth® unit via radio wave transmission, a call can be made or received by pressing the talk button, pick-up button, or hang-up button on the audio remote control switch, or by operating the centre display. For example, even if a device (mobile phone) is in your coat pocket, a call can be made without taking the device (mobile phone) out and operating it directly.

Bluetooth® audio outline

When a portable audio unit equipped with the Bluetooth® communication function is paired to the vehicle, you can listen to music stored on the paired portable audio device from the vehicle's speakers. It is not necessary to connect the portable audio device to the vehicle's external input terminal. After programming, operate the vehicle audio control panel to play/stop the audio.

NOTE

- For your safety, a device can be paired only when the vehicle is parked. If the vehicle starts to move, the pairing procedure will end. Park the vehicle in a safe place before pairing.
- The communication range of a Bluetooth® equipped device is about 10 meters (32 ft) or less.
- Basic audio operation is available using voice commands even if Bluetooth® is not connected.
- For safety reasons, operation of the centre display is disabled while the vehicle is being driven. However, items not displayed in grey can be operated using the commander switch while the vehicle is being driven.

*Some models.

⚠ CAUTION

Some Bluetooth® mobile devices are not compatible with the vehicle. Consult an Authorised Mazda Repairer, Mazda's call centre or Web support centre for information regarding Bluetooth® mobile device compatibility:

Phone:
(Germany)
0800 4263 738 (8:00—18:00 Central European Time)
(Except Germany)
00800 4263 7383 (8:00—18:00 Central European Time)
(Worldwide)
+ 49 (0) 6838 907 287 (8:00—18:00 Central European Time)
Web:
http://www.mazdahandsfree.com

Applicable Bluetooth® specification (Recommended)
Type A/Type B: Ver. 2.0

Type C/Type D: Ver. 1.1/1.2/2.0 + EDR/2.1 + EDR/3.0 (conformity)

▼Component Parts

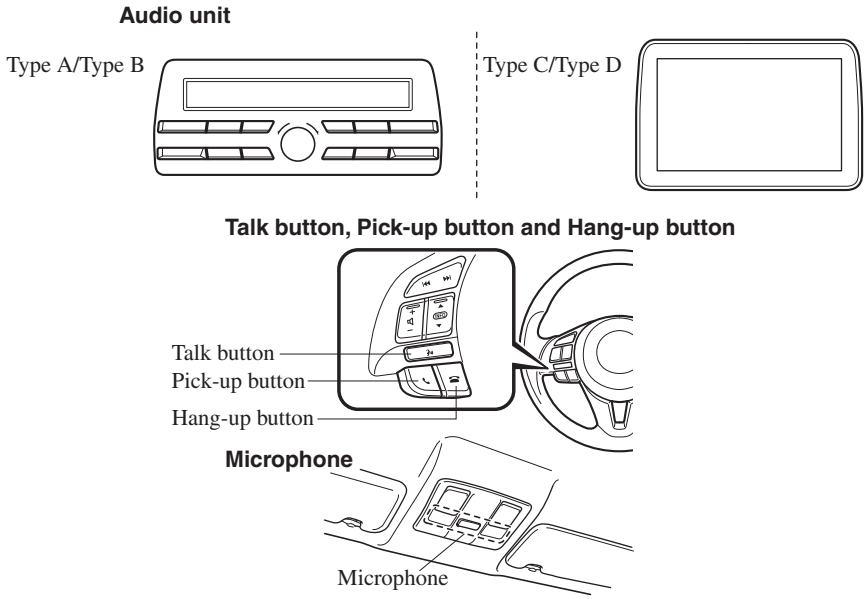

Microphone (hands-free)

The microphone is used for speaking voice commands or when making a Hands-free call.

Talk button, Pick-Up button and Hang-Up button (hands-free)

The basic functions of Bluetooth® Hands-Free can be used for such things as making calls or hanging up using the talk, pick-up and hang-up buttons on the steering wheel.

Commander switch (Type C/Type D)

The commander switch is used for volume adjustment and display operation. Tilt or turn the commander knob to move the cursor. Press the commander knob to select the icon.

Volume adjustment

The power/volume dial of the audio unit*1 or the volume dial of the commander switch*2 is used to adjust the volume. Turn the dial to the right to increase volume, to the left to decrease it.
The volume can also be adjusted using the volume button on the steering wheel.

*1 Type A/Type B
*2 Type C/Type D

NOTE
If the volume is lower compared to other audio modes, increase the volume from the device side.

(Type C/Type D)

Conversation volume and the volume of the voice guidance and ringtone can each be set in advance.

1. Select the icon on the home screen to display the Communication screen.
2. Select Settings.
3. Adjust the Phone Volume and the VR and Ringtone using the slider.

▼Bluetooth® Preparation (Type A/ Type B)

Bluetooth® Hands-Free Preparation

Pairing code setting

The 4-digit pairing code setting for registration of your cell phone (pairing) can be set beforehand.

NOTE
The initial setting value is “0000”.

1. Press the pick-up button or talk button with a short press.
2. **Say:** [Beep] “Setup”
3. **Prompt:** “Select one of the following: Pairing options, confirmation prompts, language, password, select phone or select music player.”
4. **Say:** [Beep] “Pairing options”
5. **Prompt:** “Select one of the following: Pair, Edit, Delete, List, or Set pin Code.”
6. **Say:** [Beep] “Set pin code”
7. **Prompt:** “Your current pin code is XXXX. Do you want to change it to a different pairing pin code?”
8. **Say:** [Beep] “Yes”
9. **Prompt:** “Please say a 4-digit pairing code.”
10. **Say:** [Beep] “YYYY”
11. **Prompt:** “YYYY is this correct?”
12. **Say:** [Beep] “Yes” or “No”
13. If “Yes”, go to Step 14. If “No”, the procedure returns to Step 9.
14. **Prompt:** “Your new pairing pin code is YYYY. Use this pin code when pairing devices to the Hands free system. Do you want to pair a device now?”
15. **Say:** [Beep] “Yes” or “No”
16. If “Yes”, the system switches to the device registration mode. If “No”, the system returns to standby status.

Device pairing

To use Bluetooth® Hands-Free, the device equipped with Bluetooth® has to be paired to the Bluetooth® unit using the following procedure.
A maximum of seven devices including hands-free mobile phones and Bluetooth® audio devices can be paired to one vehicle.

NOTE
• A device can be paired only when the vehicle is parked. If the vehicle starts to move, the pairing procedure will end. Pairing is dangerous while driving - pair up your device before you start driving. Park the car in a safe place before paired. • If a Bluetooth® device has already been paired to the vehicle as a Bluetooth® audio device, it does not need to be paired again when using the device as a hands-free mobile phone. Conversely, it does not need to be paired again as a Bluetooth® audio device if it has already been paired as a hands-free mobile phone. • Since the communication range of a Bluetooth® equipped device is about 10 meters (32 ft), if a device is placed within a 10-meter (32 ft) radius of the vehicle, it may be detected/paired unintentionally while another device is being paired.

1. Activate the Bluetooth® application of the device.

NOTE

For the operation of the device, refer to its instruction manual.

2. Press the pick-up button or talk button with a short press.
3. **Say:** [Beep] “Setup”
4. **Prompt:** “Select one of the following: Pairing options, confirmation prompts, language, password, select phone or select music player.”
5. **Say:** [Beep] “Pairing options”
6. **Prompt:** “Select one of the following: Pair, edit, delete, list, or set pin code.”
7. **Say:** [Beep] “Pair”
8. **Prompt:** “Start the pairing process on your Bluetooth® device. Your pin code is 0000 (XXXX). Input this on your Bluetooth® device. See device manual for instructions.”
9. Using the device, perform a search for the Bluetooth® device (Peripheral device).

NOTE

For the operation of the device, refer to its instruction manual.

10. Select “Mazda” from the device list searched by the device.
11. Input the 4-digit pairing code to the device.
12. **Prompt:** “Please say the name of the device after the beep.”
13. **Say:** [Beep] “XXXX - - -” (Speak a “device tag”, an arbitrary name for the device.)
    Example: “Stan's device.”

NOTE

Say a paired “device tag” within 10 seconds.
If more than two devices are to be paired, they cannot be paired with the same or similar “device tag”.

14. **Prompt:** “Adding XXXXXX - - - (Ex. “Stan's device”) (Device tag). Is this correct?”
15. **Say:** [Beep] “Yes”
16. **Prompt:** “Pairing complete”

After a device is registered, the system automatically identifies the device. By activating Bluetooth® Hands-Free again, or by activating Bluetooth® Hands-Free first after switching the ignition from OFF to ACC, the system reads out a voice guidance, “XXXXXX - - - (Ex. “Stan's device”) (Device tag) is connected”.

NOTE

- When the pairing is completed, the symbol is displayed.
- Some Bluetooth® audio devices need a certain amount of time before the symbol is displayed.
- Device registration can also be done by operating the audio unit.
- Depending on the device, the registration status may be lost after a certain period of time. If this occurs, repeat the entire process from Step 1.

Registered device read-out

Bluetooth® Hands-Free can read-out the devices registered to its system.

NOTE
Do this function only when parked. It is too distracting to attempt while driving and you may make too many errors to be effective.

1. Press the pick-up button or talk button with a short press.
2. **Say:** [Beep] “Setup”
3. **Prompt:** “Select one of the following: Pairing options, confirmation prompts, language, password, select phone or select music player.”
4. **Say:** [Beep] “Pairing options”
5. **Prompt:** “Select one of the following: Pair, edit, delete, list, or set pin code.”
6. **Say:** [Beep] “List”
7. **Prompt:** “XXXXX..., XXXXX..., XXXXX... (Ex. Device A, device B, device C)” (The voice guidance reads out the device tags registered to the hands-free system.)

   Press the talk button with a short press during the read-out at the desired device, and then say one of the following voice commands to execute it.

   - “Select phone”: Selects device (Mobile phone) when the talk button is short-pressed.
   - “Select music player”: Selects device (Music player) when the talk button is short-pressed.
   - “Edit”: Edits device when the talk button is short-pressed.
   - “Continue”: Continues the list read-out.
   - “Delete”: Deletes the registered device when the talk button is short-pressed.
   - “Previous”: Returns to the previous device in read-out when the talk button is short-pressed.
8. **Prompt:** “End of list, would you like to start from the beginning?”
9. **Say:** [Beep] “No”
10. **Prompt:** “Returning to main menu.”

Device selection

If several devices have been paired, the Bluetooth® unit links the device last paired. If you would like to link a different paired device, it is necessary to change the link. The order of device priority after the link has been changed is maintained even when the ignition is switched off.

(Hands-free phone)

1. Press the pick-up button or talk button with a short press.
2. **Say:** [Beep] “Setup”
3. **Prompt:** “Select one of the following: Pairing options, confirmation prompts, language, password, select phone or select music player.”
4. **Say:** [Beep] “Select phone”
5. **Prompt:** “Please say the name of the device you would like to select. Available devices are XXXXX... (Ex. device A), XXXXX... (Ex. device B), XXXXX... (Ex. device C). Which device please?”
6. **Say:** [Beep] “X” (Say the number for the mobile phone to be connected.)
7. **Prompt:** “XXXXX... (Ex. device B...) (Registered device tag) is this correct?”
8. **Say:** [Beep] “Yes”
9. **Prompt:** “XXXXX... (Ex. device B...) (Device tag) selected.”

(Music player)

1. Press the pick-up button or talk button with a short press.
2. **Say:** [Beep] “Setup”
3. **Prompt:** “Select one of the following: Pairing options, confirmation prompts, language, password, select phone or select music player.”
4. **Say:** [Beep] “Select music player”
5. **Prompt:** “Please say the name of the device you would like to select. Available devices are XXXXX... (Ex. device A), XXXXX... (Ex. device B), XXXXX... (Ex. device C). Which device please?”
6. **Say:** [Beep] “X” (Say the number for the music player to be connected.)
7. **Prompt:** “XXXXX... (Ex. device B...) (Registered device tag) is this correct?”
8. **Say:** [Beep] “Yes”
9. **Prompt:** “XXXXX... (Ex. device B...) (Device tag) selected.”

NOTE

- When the selected device connection is completed, the ⊟ or ♪ symbol is displayed.
- Some Bluetooth® audio devices need a certain amount of time before the ⊟ or ♪ symbol is displayed.
- Device (Music player) selection can also be done by operating the panel button.

Deleting a device

Registered devices (Mobile phone) can be deleted individually or collectively.

NOTE

Do this function only when parked. It is too distracting to attempt while driving and you may make too many errors to be effective.

1. Press the pick-up button or talk button with a short press.
2. **Say:** [Beep] “Setup”
3. **Prompt:** “Select one of the following: Pairing options, confirmation prompts, language, password, select phone or select music player.”
4. **Say:** [Beep] “Pairing options”

5. **Prompt:** “Select one of the following: Pair, edit, delete, list, or set pin code.”

NOTE
A registered device (Mobile phone) can be deleted using the registration list.

6. **Say:** [Beep] “Delete”
7. **Prompt:** “Please say the name of the device you would like to delete. Available devices are XXXXX... (Ex. device A), XXXXX... (Ex. device B), XXXXX... (Ex. device C), or all. Which device please?”
8. **Say:** [Beep] “X” (Say the number of the device to be deleted.)

NOTE
Say “All” to delete all devices (Mobile phone).

9. **Prompt:** “Deleting XXXXX... (Ex. device B...) (Registered device tag). Is this correct?”
10. **Say:** [Beep] “Yes”
11. **Prompt:** “Deleted”

Registered device editing

1. Press the pick-up button or talk button with a short press.
2. **Say:** [Beep] “Setup”
3. **Prompt:** “Select one of the following: Pairing options, confirmation prompts, language, password, select phone or select music player.”
4. **Say:** [Beep] “Pairing options”
5. **Prompt:** “Select one of the following: Pair, edit, delete, list, or set pin code.”
6. **Say:** [Beep] “Edit”
7. **Prompt:** “Please say the name of the device you would like to edit. Available devices are XXXXX... (Ex. device A), XXXXX... (Ex. device B), XXXXX... (Ex. device C). Which device please?”
8. **Say:** [Beep] “X” (Say the number of the device to be edited.)
9. **Prompt:** “New name please?”
10. **Say:** [Beep] “XXXXX... (Ex. device C)” (Speak a “device tag”, an arbitrary name for the device.)
11. **Prompt:** “XXXXX... (Ex. device C) (Device tag), is this correct?”
12. **Say:** [Beep] “Yes”
13. **Prompt:** “New name saved.”

Bluetooth® Audio Preparation

Bluetooth® audio device set-up

Bluetooth® audio pairing, changes, deletions, and display of paired device information can be performed.

1. The mode changes as follows each time the menu button (**MENU**) is pressed. Select “BT SETUP”.

Type A

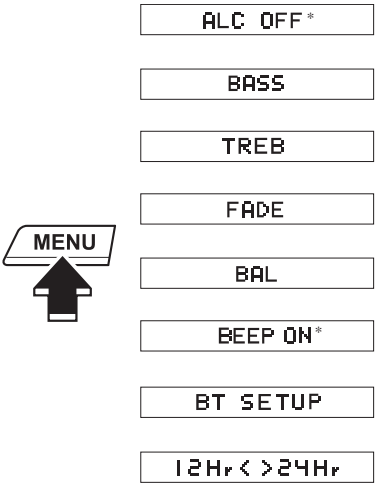

Type B

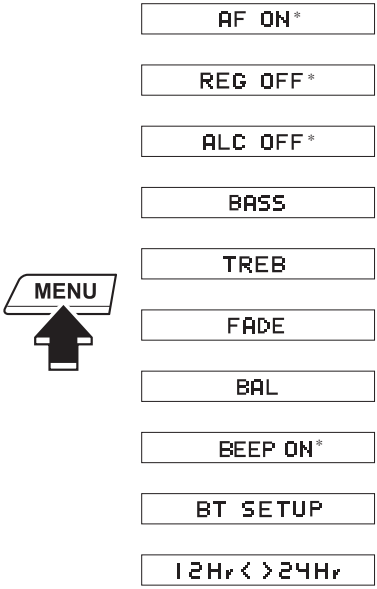

* Depending on the mode selected, the indication changes.

2. Turn the audio control dial and select a desired mode.

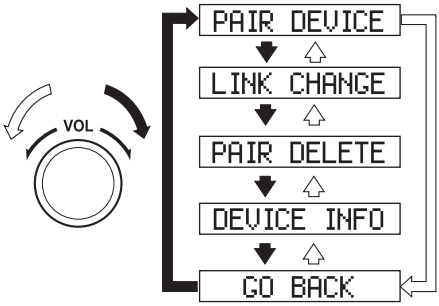

Display	Mode	Function
PAIR DEVICE	Pairing mode	Bluetooth® audio device pairing
LINK CHANGE	Link change mode	Changing link to Bluetooth® audio device
PAIR DELETE	Pairing deletion mode	Deleting link to Bluetooth® audio device
DEVICE INFO	Device information display mode	Displaying vehicle's Bluetooth® unit information

3. Press the audio control dial to determine the mode.

Bluetooth® audio device pairing

Any Bluetooth® audio device must be paired to the vehicle's Bluetooth® unit before it can be listened to over the vehicle's speakers.
A maximum of seven devices including Bluetooth® audio devices and hands-free mobile phones can be paired to one vehicle.

NOTE

- If a Bluetooth® device has already been paired to the vehicle as a hands-free mobile phone, it does not need to be paired again when using the device as a Bluetooth® audio device. Conversely, it does not need to be paired again as a hands-free mobile phone if it has already been paired as a Bluetooth® audio device.
- Device registration can also be done using voice recognition.

Concerning the operation of a Bluetooth® audio device itself, refer to its instruction manual.
Some Bluetooth® audio devices have PIN codes (four digits). Refer to the audio device's instruction manual because the pairing procedure differs depending on whether it has a PIN code or not.

Pairing a Bluetooth® audio device which has a four-digit PIN code

1. Using the audio control dial, select the pairing mode “PAIR DEVICE” in the “BT SETUP” mode. (Refer to “Bluetooth® audio device set-up” for details.)
2. Press the audio control dial to determine the mode.
   After “ENTER PIN” is displayed on the audio display for three seconds, “PIN 0000” is displayed and the PIN code can be input.

3. Input the PIN code of your Bluetooth® audio device by pressing channel preset buttons 1 to 4 while “PIN 0000” is displayed.
   Press channel preset button 1 to input the first digit, 2 for the second, 3 for the third, and 4 for the forth. For example, if the PIN code were “4213”, press channel preset button 1 four times (1, 2, 3, 4), button 2 twice (1, 2), button 3 once (1), and button 4 three times (1, 2, 3). If the “PIN 0000” display disappears before finishing the PIN code input, repeat the procedure from Step 1.

NOTE

Some devices accept only a particular pairing code (Usually, “0000” or “1234”).
If pairing cannot be completed, refer to the owner's manual of your mobile device, and try those numbers if necessary.

4. Press the audio control dial while the input PIN code is displayed.
   “PAIRING” flashes on the display.
5. Operate the Bluetooth® audio device and set it to the pairing mode while “PAIRING” is flashing.
6. When the pairing is completed, “♪” and “PAIR SUCCESS” are displayed after about 10-30 seconds, after which “PAIR SUCCESS” continues to be displayed for three seconds, and then the unit returns to the normal display.

NOTE

- Some Bluetooth® audio devices need a certain amount of time before the “♪” symbol is displayed.
- If the pairing failed, “Err” flashes for three seconds.
- Pairing cannot be performed while the vehicle is moving. If you attempt to perform pairing while the vehicle is moving, “PAIR DISABLE” is displayed.
- If seven Bluetooth® audio devices have already been paired to the vehicle, pairing cannot be performed and “MEMORY FULL” is displayed. Delete one paired device to pair another one.

Pairing a Bluetooth® audio device which does not have a four-digit PIN code

1. Using the audio control dial, select the pairing mode “PAIR DEVICE” in the “BT SETUP” mode. (Refer to “Bluetooth® audio set up” for details.)
2. Press the audio control dial to determine the mode. After “ENTER PIN” is displayed on the audio display for three seconds, “PIN 0000” is displayed and the PIN code can be input.
3. Press the audio control dial while “PIN 0000” is displayed.
   “PAIRING” flashes on the audio display.
4. Operate the Bluetooth® audio device and set it to the pairing mode while “PAIRING” is flashing.

5. As the Bluetooth® audio device requires a PIN code, input “0000”.
6. When the pairing is completed, “♪” and “PAIR SUCCESS” are displayed after about 10-30 seconds, after which “PAIR SUCCESS” continues to be displayed for three seconds, and then the unit returns to the normal display.

NOTE

- If pairing cannot be completed, try “1234” instead. Refer to the owner's manual of your mobile device for the right PIN code.
- Some Bluetooth® audio devices need a certain amount of time before the “♪” symbol is displayed.
- If the pairing failed, “Err” flashes for three seconds.
- Pairing cannot be performed while the vehicle is moving. If you attempt to perform pairing while the vehicle is moving, “PAIR DISABLE” is displayed.
- If seven Bluetooth® audio devices have already been paired to the vehicle, pairing cannot be performed and “MEMORY FULL” is displayed. Delete one paired device to pair another one.

Device selection

If several devices have been paired, the Bluetooth® unit links the device last paired. If you would like to link a different paired device, it is necessary to change the link. The order of device priority after the link has been changed is maintained even when the ignition is switched off.

1. Using the audio control dial, select the link change mode “LINK CHANGE” in the “BT SETUP” mode. (Refer to “Bluetooth® audio device set-up” for details.)
2. Press the audio control dial to determine the mode.
3. The name of the currently linked Bluetooth® audio device is displayed. If no Bluetooth® audio device is currently linked, the name of the first device among the paired devices is displayed.
4. Turn the audio control dial to select the name of the device you would like to link.

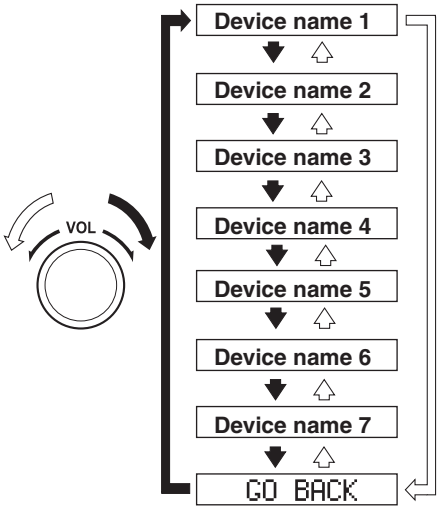

5. Press the audio control dial to select the device you would like to link.
   The "♪" symbol disappears, and "PAIRING" flashes in the audio display.

NOTE

When "GO BACK" is selected and the audio control dial is pressed, the display returns to "LINK CHANGE".

6. If the link to the desired device is successful, the "♪" symbol is displayed again, together with "LINK CHANGED". "LINK CHANGED" is displayed for three seconds, then it returns to the normal display.

NOTE

- Some Bluetooth® audio devices need a certain amount of time before the "♪" symbol is displayed.
- If a hands-free type mobile phone has been the most recently paired device, the Bluetooth® unit links this device. If you would like to use a Bluetooth® audio type device which has been previously paired to the Bluetooth® unit, the link must be changed to this device.
- If an error occurs while trying to link a device, "Err" flashes in the display for three seconds, and the display returns to "LINK CHANGE". If this occurs, check the pairing status of the Bluetooth® audio device and the location of the device in the vehicle (not in the luggage compartment/ boot or a metal-type box), and then try the link operation again.
- Device selection can also be done using voice recognition.

How to confirm the device currently linked

Switch to the link-change mode. (Refer to "Changing the link to a Bluetooth® audio device")
The device name displayed first is the device which is currently linked.

Deleting a device

1. Using the audio control dial, select the pairing delete mode “PAIR DELETE” in the “BT SETUP” mode. (Refer to “Bluetooth® audio device set-up” for details.)
2. Press the audio control dial to determine the mode.
3. The name of the first device among the paired devices is displayed.
4. Rotate the audio control dial and select the name of the paired device you would like to delete.

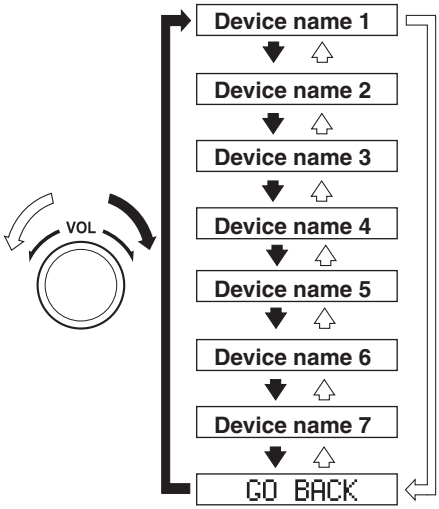

NOTE

Only the names of paired devices can be displayed. If only one device is paired, only the name for this device is displayed.

5. If a selection other than “GO BACK” is made and the audio control dial is pressed, “SURE ? NO” is displayed.
6. Rotate the audio control dial clockwise and switch the display to “SURE ? YES”.

NOTE

The display changes as follows depending on whether the audio control dial is rotated clockwise or anticlockwise.
-Clockwise: “SURE ? YES” displayed
-Anticlockwise: “SURE ? NO” displayed

7. Press the audio control dial to delete the selected device.

NOTE

Select “GO BACK” and press the audio control dial to return to the “PAIR DELETE” display.

8. “PAIR DELETED” is displayed for three seconds after the deletion is completed, and then it returns to the normal display.

NOTE

If an error occurs while trying to delete the paired device, “Err” flashes in the display for three seconds and the display returns to “LINK DELETE”.

Bluetooth® audio device information display

1. Using the audio control dial, select the pair device information display mode “DEVICE INFO” in the “BT SETUP” mode. (Refer to “Bluetooth® audio device set-up” for details.)
2. Press the audio control dial to determine the mode.
3. The name of the Bluetooth® unit device is displayed.
4. Rotate the audio control dial to select the information for the Bluetooth® unit which you would like to view.

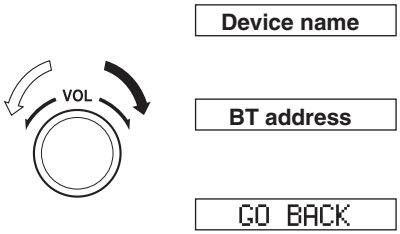

NOTE

When “GO BACK” is selected and the audio control dial is pressed, the display returns to “DEVICE INFO”.

▼Available Language (Type A/Type B)

The available languages are English, French, Spanish, Italian, German, Dutch, and Portuguese. If the language setting is changed, all of the voice guidance and voice input commands are done in the selected language.

NOTE

- If the language setting is changed, device registration is maintained.
- Phonebook records are not cleared, but each language has a separate phonebook. Therefore, entries created in one language will need to be re-entered in the phonebook of the new language.
- Do these steps before you start driving. These less used functions are too distracting to undertake while driving until you are fully familiar with the system.

(Method 1)

1. Press the pick-up button or talk button with a short press.
2. **Say:** [Beep] “Setup”
3. **Prompt:** “Select one of the following: Pairing options, confirmation prompts, language, password, select phone or select music player.”
4. **Say:** [Beep] “Language”
5. **Prompt:** “Select a language: English, French, Spanish, Italian, German, Dutch, or Portuguese.”

6. **Say:** [Beep] “French” (Speak the desired language: “English”, “French”, “Spanish”, “Italian”, “German”, “Dutch”, or “Portuguese”)

NOTE
Other language settings can also be made while in the current setting by saying the name of the language in the native pronunciation.

7. **Prompt:** “French (Desired language) selected. Is this correct?”
8. **Say:** [Beep] “Yes”
9. **Prompt:** “Please wait. Switching to French phonebook. French selected.” (Spoken in the newly selected language).

(Method 2)

1. Press the pick-up button or talk button with a short press.
2. **Say:** [Beep] “French” (Say the desired language: “English”, “French”, “Spanish”, “Italian”, “German”, “Dutch”, or “Portuguese”). (Change the desired language by saying the language name.)

NOTE
Other language settings can also be made while in the current setting by saying the name of the language in the native pronunciation.

3. **Prompt:** “Would you like to change the language to French (Desired language)?”
4. **Say:** [Beep] “Yes”
5. **Prompt:** “Please wait. Switching to French phonebook. French selected.” (Spoken in the newly selected language).

▼Voice Recognition (Type A/Type B)

In this section, the basic operation of the voice recognition is explained.

Activating Voice Recognition

To Activate the Main Menu: Press the pick-up button or talk button with a short press.

Ending Voice Recognition

Use one of the following methods:

- Press and hold the talk-button.
- Press the hang-up button.

Skipping Voice Guidance (for faster operation)

Press and release the talk-button.

NOTE
• The Bluetooth® Hands-Free system is operable several seconds after the ignition is switched to ACC or ON (requires less than 15 seconds). • When operating the audio unit or the A/C while using Bluetooth® Hands-Free, the beep sounds or voice guidance (audio unit)/cannot be heard.

Tutorial

The tutorial explains how to use Bluetooth® Hands-Free.
To activate the tutorial, do the following:

1. Press the pick-up button or talk button with a short press.
2. **Say:** [Beep] “Tutorial”
3. Follow the prompts to receive the appropriate voice guidance instructions.

Commands useable anytime during voice recognition

“Help” or “Go Back” are commands which can be used at anytime during voice recognition.

Help function use

The help function informs the user of all the available voice commands under the current conditions.

1. **Say:** [Beep] “Help”
2. Follow the prompts to receive the appropriate voice guidance instructions.

Returning to previous operation

This command is for returning to the previous operation while in the voice recognition mode.
Say: [Beep] “Go Back”

To prevent a deterioration in the voice recognition rate and voice quality, the following points should be observed:

- **The voice recognition cannot be performed while voice guidance or the beep sound is operating. Wait until the voice guidance or the beep sound is finished before saying your commands.**
- Dialects or different wording other than hands-free prompts cannot be recognised by voice recognition. Speak in the wording specified by the voice commands.
- It is not necessary to face the microphone or approach it. Speak the voice commands while maintaining a safe driving position.
- Do not speak too slow or too loud.
- Speak clearly, without pausing between words or numbers.
- Close the windows to reduce loud noises from outside the vehicle, or turn down the airflow of the air-conditioning system while Bluetooth® Hands-Free is being used.
- Make sure the vents are not directing air up towards the microphone.

NOTE

If the voice recognition performance is not satisfactory.
Refer to Voice Recognition Learning Function (Speaker Enrolment) (Type A/ Type B) on page 5-109.
Refer to Troubleshooting on page 5-147.

▼Security Setting (Type A/Type B)

If a password is set, the system cannot be activated unless the password is input.

NOTE
Do this function only when parked. It is too distracting to attempt while driving and you may make too many errors to be effective.

Password setting

1. Press the pick-up button or talk button with a short press.
2. **Say:** [Beep] “Setup”
3. **Prompt:** “Select one of the following: Pairing options, confirmation prompts, language, password, select phone or select music player.”
4. **Say:** [Beep] “Password”
5. **Prompt:** “Password is disabled. Would you like to enable it?”
6. **Say:** [Beep] “Yes”
7. **Prompt:** “Please say a 4-digit password. Remember this password. It will be required to use this system.”
8. **Say:** [Beep] “XXXX” (Say a desired 4-digit password, “PCode”.)
9. **Prompt:**“Password XXXX (Password, PCode). Is this correct?”
10. **Say:** [Beep] “Yes”
11. **Prompt:**“Password is enabled.”

Using Bluetooth® Hands-Free with a password

1. Press the pick-up button or talk button with a short press.
2. **Prompt:** “Hands-Free system is locked. State the password to continue.”
3. **Say:** [Beep] “XXXX” (Say the set password “PCode”.)
4. If the correct password is input, voice guidance “XXXXXX... (Ex. “Mary's device”) (Device tag) is connected” is announced.
   If the password is incorrect, voice guidance “XXXX (4-digit password, Pcode) incorrect password, please try again” is announced.

Cancelling the password

NOTE
Do this function only when parked. It is too distracting to attempt while driving and you may make too many errors to be effective.

1. Press the pick-up button or talk button with a short press.
2. **Say:** [Beep] “Setup”
3. **Prompt:** “Select one of the following: Pairing options, confirmation prompts, language, password, select phone or select music player.”
4. **Say:** [Beep] “Password”
5. **Prompt:**“Password is enabled. Would you like to disable it?”
6. **Say:** [Beep] “Yes”
7. **Prompt:**“Password is disabled.”

Confirmation Prompts

The confirmation prompt confirms the command content to the user before advancing to the operation requested by the user. When this function is turned on, the system reads out the voice input command previously received and confirms whether the command is correct before advancing to the command execution.
When the confirmation prompt function is turned on:
(Ex. “Calling John's device. Is this correct?”)
When the confirmation prompt function is turned off:
(Ex. “Calling John's device.”)

NOTE
If the confirmation prompt function is turned off when making an emergency call, the system reads out and confirms the command before executing it.

1. Press the pick-up button or talk button with a short press.
2. **Say:** [Beep] “Setup”
3. **Prompt:** “Select one of the following: Pairing options, confirmation prompts, language, password, select phone or select music player.”
4. **Say:** [Beep] “Confirmation prompts”
5. **Prompt:** “Confirmation prompts are on/off. Would you like to turn confirmation prompts off/on?”
6. **Say:** [Beep] “Yes”
7. **Prompt:** “Confirmation prompts are off/on.”

▼Voice Recognition Learning Function (Speaker Enrolment) (Type A/Type B)

The voice recognition learning function enables voice recognition appropriate to the characteristics of the user's voice. If the recognition of the voice input commands to the system is not adequate, this function can largely improve the system's voice recognition of the user. If your voice can be recognised sufficiently without using this function, you may not realize the added benefit of the function. To register your voice, the voice input command list must be read out. Read out the list when the vehicle is parked. Perform the registration in as quiet a place as possible (Page 5-106). The registration must be performed completely. The required time is a few minutes. The user needs to be seated in the driver's seat with the voice input command list for voice recognition learning visible.

When voice recognition learning is done for the first time

1. Press the pick-up button or talk button with a short press.
2. **Say:** [Beep] “Voice training”
3. **Prompt:** “This operation must be performed in a quiet environment while the vehicle is stopped. See the owner's manual for the list of required training phrases. Press and release the talk button when you are ready to begin. Press the hang-up button to cancel at any time.”
4. Press the talk button with a short press.
5. The voice guidance reads out the voice input command number (refer to the voice input command list for voice recognition learning). (Ex. “Please read phrase 1”)

6. **Say:** [Beep] “0123456789” (Say the voice input command for voice recognition learning (1 to 8) according to the voice guidance.)
7. **Prompt:** “Speaker enrolment is complete.”

NOTE
If an error occurred in the voice recognition learning, re-learning can be done by pressing the talk button with a short press.

Voice recognition re-learning

If voice recognition learning has already been done.

1. Press the pick-up button or talk button with a short press.
2. **Say:** [Beep] “Voice training”
3. **Prompt:** “Enrolment is enabled/ disabled. Would you like to disable/ enable or retrain?”
4. **Say:** [Beep] “Retrain”
5. **Prompt:** “This operation must be performed in a quiet environment while the vehicle is stopped. See the owner's manual for the list of required training phrases. Press and release the talk button when you are ready to begin. Press the hang-up button to cancel at any time.”
6. Press the talk button with a short press.
7. The voice guidance reads out the voice input command number (refer to the voice input command list for voice recognition learning). (Ex. “Please read phrase 1”)
8. **Say:** [Beep] “0123456789” (Say the voice input command for voice recognition learning (1 to 8) according to the voice guidance.)
9. **Prompt:** “Speaker enrolment is complete.”

NOTE
If an error occurred in the voice recognition learning, re-learning can be done by pressing the talk button with a short press.

Voice input command list for voice recognition learning

When reading out, the following points must be observed:

- Read out the numbers one at a time correctly and naturally.
  (For example, “1234” must be read out “one, two, three, four” not “twelve, thirty four”.)
- Do not read out parentheses. “(” and hyphens “-” are used for separating numbers in a phone number.

Ex.
“(888) 555-1212” must be spoken “Eight, eight, eight, five, five, five, one, two, one, two.”

Phrase	Command
1	0123456789
2	(888) 555-1212
3	Call
4	Dial
5	Setup
6	Cancel
7	Continue
8	Help

NOTE

- The applicable phrase appears in the audio display.
- After user voice registration is completed, voice guidance “Speaker enrolment is complete” is announced.

Voice recognition learning on/off

1. Press the pick-up button or talk button with a short press.
2. **Say:** [Beep] “Voice training”
3. **Prompt:** “Enrolment is enabled/disabled. Would you like to disable/enable or retrain?”
4. **Say:** [Beep] “Disable” or “Enable”
5. When “Disable” is spoken, the voice recognition learning is turned off. When “Enable” is spoken, the voice recognition learning is turned on.
6. **Prompt:** “Speaker Enrolment is disabled/enabled.”

▼Bluetooth® Preparation (Type C/Type D)

Device pairing

To use Bluetooth® audio and Hands-Free, the device equipped with Bluetooth® has to be paired to the unit using the following procedure. A maximum of seven devices including Bluetooth® audio devices and hands-free mobile phones can be paired.

NOTE

The Bluetooth® system may not operate for 1 or 2 minutes after the ignition is switched to ACC or ON. However, this does not indicate a problem. If the Bluetooth® system does not connect automatically after 1 or 2 minutes have elapsed, make sure that the Bluetooth® setting on the device is normal and attempt to reconnect the Bluetooth® device from the vehicle side.

Pairing Procedure

1. Select the ⚙ icon on the home screen to display the Settings screen.
2. Select the Devices tab.
3. Select Bluetooth.
4. Turn the Bluetooth® setting on.
5. Select Add New Device to display the message and switch to the device operation.
6. Using your device, perform a search for the Bluetooth® device (Peripheral device).
7. Select “Mazda” from the device list searched by the device.

8. **(Device with Bluetooth® version 2.0)**
   Input the displayed 4-digit pairing code into the device.
   (Device with Bluetooth® version 2.1 or higher)
   Make sure the displayed 6-digit code on the audio is also displayed on the device, and touch the Yes.
   Connection permission and phonebook access permission for your mobile device may be required depending on the mobile device.
9. If pairing is successful, the functions of the device connected to Bluetooth® are displayed.
10. **(Devices compatible with Mazda Email / SMS function)**
    SMS (Short Message Service) messages, and E-mail for the device are downloaded automatically. A download permission operation for your device may be required depending on the device.

NOTE
When Call history and messages are downloaded automatically, each automatic download setting must be on. Refer to Communication Settings on page 5-132.

After a device is registered, the system automatically identifies the device. By activating Bluetooth® Hands-Free again, or by activating Bluetooth® Hands-Free first after switching the ignition from OFF to ACC, the device connection condition is indicated in the centre display.

IMPORTANT note about pairing and automatic reconnection:

- **If pairing is redone on the same mobile phone device, first clear "Mazda" displayed on the Bluetooth® setting screen of the mobile device.**
- When the OS of the device is updated, the pairing information may be deleted. If this happens, reprogramme the pairing information to the Bluetooth® unit.
- Before you pair your device, make sure that Bluetooth® is "ON", both on your phone and on the vehicle.

Device selection

If several devices have been paired, the Bluetooth® unit links the device last paired. If you would like to link a different paired device, it is necessary to change the link. The order of device priority after the link has been changed is maintained even when the ignition is switched off.

Connecting other devices

1. Select the ⚙ icon on the home screen to display the Settings screen.
2. Select the Devices tab.
3. Select Bluetooth.
4. Turn the Bluetooth® setting on.
5. Select the name of the device you would like to connect.
6. Phone And Audio **selection**
   Connects both devices as hands-free and Bluetooth® audio.
   Phone Only **selection**
   Connects as a hands-free device.
   Audio Only **selection**
   Connects as Bluetooth® audio.

NOTE

The following functions can be used for the Hands-free or audio.

- Hands-free: Phone calls and E-mail/SMS
- Audio: Bluetooth® audio, Aha™, Stitcher™ radio

Disconnecting a device

1. Select the ⚙ icon on the home screen to display the Settings screen.
2. Select the Devices tab.
3. Select Bluetooth.
4. Turn the Bluetooth® setting on.
5. Select the device name which is currently connected.
6. Select Disconnect.

Deleting a device

Selecting and deleting devices

1. Select the ⚙ icon on the home screen to display the Settings screen.
2. Select the Devices tab.
3. Select Bluetooth.
4. Turn the Bluetooth® setting on.
5. Select the device name which you would like to delete.
6. Select Remove Paired Device.
7. Select Yes.

Deleting all devices

1. Select the ⚙ icon on the home screen to display the Settings screen.
2. Select the Devices tab.
3. Select Bluetooth.
4. Select Bluetooth Settings.
5. Select Remove All Paired Devices.
6. Select Yes.

Changing PIN code

PIN code (4 digits) can be changed.

1. Select the ⚙ icon on the home screen to display the Settings screen.
2. Select the Devices tab.
3. Select Bluetooth.
4. Select Bluetooth Settings.
5. Select Change Paircode.
6. Input the new PIN code to be set.
7. Select ✔.

▼Available Language (Type C/Type D)*

The language can be changed.
Refer to Settings on page 5-67.

NOTE

Depending on the language, it may only be available for the screen display, but not for the voice recognition.

▼Voice Recognition (Type C/Type D)

In this section, the basic operation of the voice recognition is explained.

Activating Voice Recognition

Press the talk button.

Ending Voice Recognition

Use one of the following methods:

- Press the hang-up button.
- Say, “Cancel”.
- Operate the commander switch or the centre display (only when vehicle is stopped).

Skipping Voice Guidance (for faster operation)

Press and release the talk button.

Troubleshooting for Voice Recognition

If you do not understand an operation method while in the voice recognition mode, say “Tutorial” or “Help”.

Commands useable anytime during voice recognition

“Go Back” and “Cancel” are commands which can be used at anytime during voice recognition.

Returning to previous operation

To return to the previous operation, say, “Go Back” while in voice recognition mode.

Cancel

To put the Bluetooth® Hands-Free system in standby mode, say, “Cancel” while in voice recognition mode.

To prevent a deterioration in the voice recognition rate and voice quality, the following points should be observed:

- **The voice recognition cannot be performed while voice guidance or the beep sound is operating. Wait until the voice guidance or the beep sound is finished before saying your commands.**
- Phone related commands are available only when your phone is connected via Bluetooth®. Make sure your phone is connected via Bluetooth® before you operate phone related voice commands.
- Music play commands, such as Play Artist and Play Album can be used only in USB audio mode.
- Do not speak too slowly or loudly (no loud voice).
- Speak clearly, without pausing between words or numbers.
- Dialects or different wording other than hands-free prompts cannot be recognised by voice recognition. Speak in the wording specified by the voice commands.
- It is not necessary to face the microphone or approach it. Speak the voice commands while maintaining a safe driving position.
- Close the windows to reduce loud noises from outside the vehicle, or turn down the airflow of the air-conditioning system while Bluetooth® Hands-Free is being used.
- Make sure the vents are not directing air up towards the microphone.

NOTE
If the voice recognition performance is not satisfactory. Refer to Troubleshooting on page 5-147.

▼Audio Operation Using Voice Recognition (Type C/Type D)

Main audio operation

The below commands are examples of the available commands.
When the talk button is pressed and the following command is spoken out, the audio can be operated. The commands in the () can be omitted. The specified name and number are put into the {}.

Voice command	Function	Corresponding audio source
(Go to/Play) AM (Radio)	Switches the audio source to AM radio.	All
(Go to/Play) FM (Radio)	Switches the audio source to FM radio.	All
(Go to/Play) DAB (Radio)	Switches the audio source to DAB radio.	All
(Go to/Play) Bluetooth (Audio)	Switches the audio source to BT audio.	All
(Go to/Play) Aha (Radio)	Switches the audio source to Aha™ Radio.	All
(Go to/Play) Stitcher	Switches the audio source to Stitcher™ Radio.	All
(Go to/Play) USB 1	Switches the audio source to USB 1.	All
(Go to/Play) USB 2	Switches the audio source to USB 2.	All
Play Playlist {Playlist name}	Plays the selected playlist.	USB
Play Artist {Artist name}	Plays the selected artist.	USB
Play Album {Album name}	Plays the selected album.	USB
Play Genre {Genre name}	Plays the selected genre.	USB
Play Folder {Folder name}	Plays the selected folder.	USB

NOTE

- Some commands cannot be used depending on devices and use conditions.
- If the Bluetooth® device, USB, or AUX is not connected, the related commands cannot be used.

Bluetooth® Hands-Free (Type A/Type B)*

▼Making a Call

Phonebook Usage

Telephone calls can be made by saying the name of a person (voice tag) whose phone number has been registered in Bluetooth® Hands-Free in advance. Refer to Phonebook registration.

1. Press the pick-up button or talk button with a short press.
2. **Say:** [Beep] “Call”
3. **Prompt:** “Name please.”
4. **Say:** [Beep] “XXXXX... (Ex. “John's phone”)” (Say a voice tag registered in the phonebook.)
5. **Prompt:** “Calling XXXXX... (Ex. “John's phone”) XXXX (Ex. “at home”). Is this correct?” (Voice tag and phone number location registered in phonebook).
6. **Say:** [Beep] “Yes”
7. **Prompt:** “Dialing”

NOTE
The “Call” command and the voice tag can be combined. Ex. In Step 2, say, “Call John's phone”, then, Steps 3 and 4 can be skipped.

Phonebook registration

Phone numbers can be registered to the Bluetooth® Hands-Free phonebook.

NOTE
Do this function only when parked. It is too distracting to attempt while driving and you may make too many errors to be effective.

1. Press the pick-up button or talk button with a short press.
2. **Say:** [Beep] “Phonebook”
3. **Prompt:** “Select one of the following: New entry, edit, list names, delete, erase all or import contact.”
4. **Say:** [Beep] “New entry”
5. **Prompt:** “Name please.”
6. **Say:** [Beep] “XXXXX... (Ex. “Mary's phone”)” (Say a voice tag for the name registered.)
7. **Prompt:** “Adding XXXXX... (Ex. “Mary's phone”) (Registered voice tag). Is this correct?”
8. **Say:** [Beep] “Yes”
9. **Prompt:** “Home, Work, Mobile, or Other?”
10. **Say:** [Beep] “Mobile” (Say “Home” , “Work”, “Mobile”, or “Other”, for the desired location to be registered.)
11. **Prompt:** “Mobile (Location to be registered). Is this correct?”
12. **Say:** [Beep] “Yes”
13. **Prompt:** “Number, please.”
14. **Say:** [Beep] “XXXXXXXXXXX” (Say the phone number to be registered.)
15. **Prompt:** “XXXXXXXXXXX (Phone number registration). After the beep, continue to add numbers, or say Go-Back to re-enter the last entered numbers, or press the Pick-Up button to save the number.”

*Some models.

16. **(Registration)**
    Press the pick-up button or say “Enter”, then go to Step 17.
    (Adding/inputting telephone number)
    Say, “XXXX” (desired telephone number), then go to Step 15.
    (Telephone number correction)
    Say, “Go Back”. The prompt replies, “Go Back. The last entered numbers have been removed.”. Then go back to Step 13.
17. **Prompt:** “Number saved. Would you like to add another number for this entry?”
18. **Say:** [Beep] “Yes” or “No”.
19. If “Yes”, an additional phone number registration can be made for the same entry.
    If “No”, the system returns to standby status.

(Import contact)

Phonebook data from your device (Mobile phone) can be sent and registered to your Bluetooth® Hands-Free phonebook using Bluetooth®.

1. Press the pick-up button or talk button with a short press.
2. **Say:** [Beep] “Phonebook”
3. **Prompt:** “Select one of the following: New entry, edit, list names, delete, erase all or import contact.”
4. **Say:** [Beep] “Import contact”
5. **Prompt:** “The hands free system is ready to receive a contact from the phone; only a home, work, mobile number can be imported into the hands free system. The import contact process requires the user to operate the phone. Refer to the phone's manual for information on how to operate the phone to perform the import operation.”
6. **Prompt:** “X (Number of locations which include data) numbers have been imported. What name would you like to use for these numbers?”
7. **Say:** [Beep] “XXXXX... (Ex. “Mary's phone”)” (Say a voice tag for the name registered.)
8. **Prompt:** “Adding XXXXX... (Ex. “Mary's phone”) (Voice tag). Is this correct?”
9. **Say:** [Beep] “Yes”
10. **Prompt:** “Number saved. Would you like to import another contact?”
11. **Say:** [Beep] “Yes” or “No”
12. If “Yes”, the procedure proceeds to Step 5.
    If “No”, the system returns to standby status.

Editing phonebook

The data registered to the Bluetooth® Hands-Free phonebook can be edited.

NOTE
Do this function only when parked. It is too distracting to attempt while driving and you may make too many errors to be effective.

1. Press the pick-up button or talk button with a short press.
2. **Say:** [Beep] “Phonebook”

3. **Prompt:** “Select one of the following: New entry, edit, list names, delete, erase all or import contact.”
4. **Say:** [Beep] “Edit”
5. **Prompt:** “Please say the name of the entry you would like to edit or say, “List names”.”
6. **Say:** [Beep] “XXXXX... (Ex. “Mary's phone”)” (Say the voice tag for the registered name to be edited in the phonebook.)
7. **Prompt:** “Home, Work, Mobile, or Other?”
8. **Say:** [Beep] “Home” (Say the registered location to be edited: “Home”, “Work”, “Mobile”, or “Other”.)
9. **Prompt:** “XXXXX... (Ex. “Mary's phone”) (Registered voice tag) XXXX (Ex. “Home”) (Registered location). Is this correct?”
10. **Say:** [Beep] “Yes”
11. **Prompt:** “The current number is XXXXXXXXXXX (Ex. “555-1234”) (Currently registered number). New number, please.”

NOTE
If there was no previous phone number registered to a location (Ex. “Work”), the prompt will only read out “Number, please”

12. **Say:** [Beep] “XXXXXXXXXXX (Ex. “555-5678”)” (Say the new phone number to be registered.)
13. **Prompt:** “XXXXXXXX (Telephone number) After the beep, continue to add numbers, or say Go-Back to re-enter the last entered numbers, or press the Pick-Up button to save the number.”
14. **(Number Change)**
    Press the pick-up button, then go to Step 15.
    (Adding/inputting telephone number)
    Say, “XXXX” (desired telephone number), then go to Step 13.
    (Telephone number correction)
    Say, “Go Back”. The prompt replies, “Go Back. The last entered numbers have been removed. Number, please.”. Then go back to Step 12.
15. **Prompt:** “Number changed.”

Phonebook data deletion

(Erasing individual phonebook data)

Individual data registered to the Bluetooth® Hands-Free phonebook can be cleared.

NOTE
Do this function only when parked. It is too distracting to attempt while driving and you may make too many errors to be effective.

1. Press the pick-up button or talk button with a short press.
2. **Say:** [Beep] “Phonebook”
3. **Prompt:** “Select one of the following: New entry, edit, list names, delete, erase all or import contact.”
4. **Say:** [Beep] “Delete”
5. **Prompt:** “Please say the name of the entry you would like to delete or say, “List names”. ”
6. **Say:** [Beep] “XXXXX... (Ex. “John's phone”) ” (Say the registered voice tag to be deleted from the phonebook.)

7. **Prompt:** “Deleting XXXXX... (Ex. “John's phone”) (Registered voice tag) Home (Registered location). Is this correct?”
8. **Say:** [Beep] “Yes”
9. **Prompt:** “XXXXX... (Ex. “John's phone”) (Registered voice tag) Home (Registered location) deleted.”

(Complete deletion of the phonebook data)

All data registered to the Bluetooth® Hands-Free phonebook can be erased.

NOTE
Do this function only when parked. It is too distracting to attempt while driving and you may make too many errors to be effective.

1. Press the pick-up button or talk button with a short press.
2. **Say:** [Beep] “Phonebook”
3. **Prompt:** “Select one of the following: New entry, edit, list names, delete, erase all or import contact.”
4. **Say:** [Beep] “Erase all”
5. **Prompt:** “Are you sure you want to delete everything from your Hands Free system phonebook?”
6. **Say:** [Beep] “Yes”
7. **Prompt:** “You are about to delete everything from your Hands Free system phonebook. Do you want to continue?”
8. **Say:** [Beep] “Yes”
9. **Prompt:** “Please wait, deleting the Hands Free system phonebook.”
10. **Prompt:** “Hands-Free system phonebook deleted.”

Read-out of names registered to the Bluetooth® Hands-Free phonebook

Bluetooth® Hands-Free can read out the list of names registered to its phonebook.

1. Press the pick-up button or talk button with a short press.
2. **Say:** [Beep] “Phonebook”
3. **Prompt:** “Select one of the following: New entry, edit, list names, delete, erase all or import contact.”
4. **Say:** [Beep] “List names”
5. **Prompt:** “XXXXX..., XXXXX..., XXXXX... (Ex. “John's phone”, Mary's phone, Bill's phone)” (Voice guidance reads out the voice tags registered to the phonebook.)
   Press the talk button with a short press during the read-out at the desired name, and then say one of the following voice commands to execute it.
   - “Continue”: Continues the list readout.
   - “Call”: Calls the registered phonebook data when the talk button is short-pressed.
   - “Edit”: Edits the registered phonebook data when the talk button is short-pressed.
   - “Delete”: Deletes the registered phonebook data when the talk button is short-pressed.
   - “Previous”: Returns to the previous phonebook data in read-out when the talk button is short-pressed.
6. **Prompt:** “End of list, would you like to start from the beginning?”
7. **Say:** [Beep] “No”

Redial Function

Redialing the number of the person previously dialed using the phone is possible.

1. Press the pick-up button or talk button with a short press.
2. **Say:** [Beep] “Redial”
3. **Prompt:** “Dialing”

Telephone Number Input

NOTE
Practice this while parked until you are confident you can do it while driving in a non-taxing road situation. If you are not completely comfortable, make all calls from a safe parking position, and only start driving when you can devote your full attention to driving.

1. Press the pick-up button or talk button with a short press.
2. **Say:** [Beep] “Dial”
3. **Prompt:** “Number, please”
4. **Say:** [Beep] “XXXXXXXXXXX (Telephone number)”
5. **Prompt:** “XXXXXXXXXXX. (Telephone number) After the beep, continue to add numbers, or say Go-Back to re-enter the last entered numbers, or press the Pick-Up button to execute dialing.”
6. **(Dialing)**
   Press the pick-up button or say “Dial”, then go to Step 7.
   (Adding/inputting telephone number)
   Say, “XXXX” (desired telephone number), then go to Step 5.
   (Telephone number correction)
   Say, “Go Back”. The prompt replies, “Go Back. The last entered numbers have been removed.”. Then go back to Step 3.
7. **Prompt:** “Dialing”

NOTE
The “Dial” command and a telephone number can be combined. Ex. In Step 2, say, “Dial 123-4567” then, Steps 3 and 4 can be skipped.

Emergency calls

A call can be made to the emergency phone number (112) using the voice input command.

1. Press the pick-up button or talk button with a short press.
2. **Say:** [Beep] “Emergency”
3. **Prompt:** “Dialing “112”, is this correct?”
4. **Say:** [Beep] “Yes”
5. **Prompt:** “Dialing”

▼Receiving an Incoming Call

1. **Prompt:** “Incoming call, press the pick-up button to answer”
2. To accept the call, press the pick-up button.
   To reject the call, press the hang-up button.

▼Hanging Up a Call

Press the hang-up button during the call. A beep sound will confirm that call is ended.

▼Mute

The microphone can be muted during a call.

1. Press the talk button with a short press.
2. **Say:** [Beep] “Mute”
3. **Prompt:**“Microphone muted”

Cancelling mute

1. Press the talk button with a short press.
2. **Say:** [Beep] “Mute off”
3. **Prompt:**“Microphone unmuted”

▼Transferring a Call from Hands-Free to a Device (Mobile Phone)

Communication between the hands-free unit and a device (Mobile phone) is cancelled, and the line can be switched to a standard call using a device (Mobile phone).

1. Press the talk button with a short press.
2. **Say:** [Beep] “Transfer call”
3. **Prompt:**“Transferred call to phone”

▼Transferring a Call from a Device (Mobile Phone) to Hands-Free

Communication between devices (Mobile phone) can be switched to Bluetooth® Hands-Free.

1. Press the talk button with a short press.
2. **Say:** [Beep] “Transfer call”
3. **Prompt:**“Transferred call to Hands Free system”

▼Call interrupt

A call can be interrupted to receive an incoming call from a third party.
Switch to a new incoming call using the following methods.

Method 1

1. Press the pick-up button.
2. **Prompt:** “Swapping calls.”

Method 2

1. Press the talk button with a short press.
2. **Say:** [Beep] “Swap calls”
3. **Prompt:** “Swapping calls.”

NOTE

- To refuse an incoming call, press the hang-up button.
- After receiving a new incoming call, the previous call is placed on hold.

Switching calls

Switching back to the previous call can also be done.

Method 1

1. Press the pick-up button.
2. **Prompt:** “Swapping calls.”

Method 2

1. Press the talk button with a short press.
2. **Say:** [Beep] “Swap calls”
3. **Prompt:** “Swapping calls.”

Three-way call function

1. Press the talk button with a short press.
2. **Say:** [Beep] “Join calls”
3. **Prompt:** “Joining calls”

Making a call using a telephone number

1. Press the talk button with a short press.
2. **Say:** [Beep] “Dial”
3. **Prompt:** “Number, please”
4. **Say:** [Beep] “XXXXXXXXXXX (Telephone number)”
5. **Prompt:** “XXXXXXXXXXX. (Telephone number) After the beep, continue to add numbers, or say Go-Back to re-enter the last entered numbers, or press the Pick-Up button to execute dialing.”
6. **(Dialing)**
   Press the pick-up button or say “Dial”, then go to Step 7.
   (Adding/inputting telephone number)
   Say, “XXXX” (desired telephone number), then go to Step 5.
   (Telephone number correction)
   Say, “Go Back”. The prompt replies, “Go Back. The last entered numbers have been removed.”. Then go back to Step 3.
7. **Prompt:** “Dialing”

Making calls using the phonebook

1. Press the talk button with a short press.
2. **Say:** [Beep] “Call”
3. **Prompt:** “Name please.”
4. **Say:** [Beep] “XXXXX... (Ex. “John's phone”)” (Say a voice tag registered in the phonebook.)
5. **Prompt:** “Calling XXXXX... (Ex. “John's phone”) XXXX (Ex. “at home”). Is this correct?” (Voice tag and phone number location registered in phonebook).
6. **Say:** [Beep] “Yes”
7. **Prompt:** “Dialing”

Redialing function

1. Press the talk button with a short press.
2. **Say:** [Beep] “Redial”
3. **Prompt:** “Dialing”

Ending the current call

Press the hang-up button during the call.

▼DTMF (Dual Tone Multi-Frequency Signal) Transmission

This function is used when transmitting DTMF via the user's voice. The receiver of a DTMF transmission is generally a home telephone answering machine or a company's automated guidance call centre (When you send tone signals back according to the voice guidance recording).

1. Press the talk button with a short press.
2. **Say:** [Beep] “XXXX... send” (Say DTMF code)
3. **Prompt:**“Sending XXXX... (DTMF code)”

Bluetooth® Hands-Free (Type C/Type D)*

▼Making a Call

Phonebook Usage

Telephone calls can be made by saying the contact name in the downloaded phonebook or the name of a person whose phone number has been registered in the Bluetooth® Hands-Free. Refer to Import contact (Download Phonebook).

1. Press the talk button.
2. Wait for the beep sound.
3. **Say:** “Call XXXXX... (Ex. “John”) Mobile”.
4. Follow the voice guidance to place the call.

Screen operation

1. Select the icon on the home screen to display the Communication screen.
2. Select Contacts to display the contact list.
3. Select the contact you would like to call to display the details for the contact.
4. Select the desired phone number to make the call.

Import contact (Download Phonebook)

Phonebook data from your device (Mobile phone) can be sent and registered to your Bluetooth® Hands-Free phonebook using Bluetooth®.

(Automatic downloading)

The “Auto Download Contacts” setting must be on. When hands-free is connected to the device, the phonebook is downloaded automatically.
Refer to Communication Settings on page 5-132.

(Manually downloading)

If the “Auto Download Contacts” setting is off, download the phonebook using the following procedure.

1. Select the icon on the home screen to display the Communication screen.
2. Select Contacts to display the contact list.
3. Select Edit Contacts.
4. Select Import All Contacts or Import Selected Contact to switch to the device operation.
5. If Import All Contacts is selected, select Download.
6. Download will be started from the mobile phone.

NOTE

- If “Import All Contacts” is performed after saving the phonebook to the Bluetooth® unit, the phonebook will be overwritten.
- A maximum of 1000 contacts can be registered to the phonebook.
- Phonebook, incoming/outgoing call record, and favourite memories are exclusive to each mobile phone to protect privacy.

 *Some models.

Favourites Contacts

A maximum of 50 contacts can be registered. It will take less time to make a call after registering the telephone number. In addition, you do not have to look for the person you want to call in the phonebook.

Registering to your favourites

1. Select the icon on the home screen to display the Communication screen.
2. Select Favourites to display the favourites list.
3. Select Add/Edit Communication Favourites.
4. Select Add New Contact or Add New Contact Details.
5. Select from the displayed list.

NOTE
When “Add New Contact” is selected, information such as the selected person’s name is also registered. In addition, when “Add New Contact Details” is selected, only the telephone number of the selected person is registered.

Making a call from your favourites

1. Select the icon on the home screen to display the Communication screen.
2. Select Favourites to display the favourites list.
3. **(Only one phone number is registered to contact)**
   Select the contact information you would like to call. Go to Step 5.
   (Multiple phone numbers are registered to contact)
   Select the contact you would like to call to display the screen indicating the details for the contact. Go to Step 4.
4. Select the phone number you would like to call.
5. Select Yes.

Deleting from your favourites

1. Select the icon on the home screen to display the Communication screen.
2. Select Favourites to display the favourites list.
3. Select Add/Edit Communication Favourites.
4. Select Delete.
5. Select the contact information which you would like to delete.
6. Select Delete.

Changing the display order of your favourites list

1. Select the icon on the home screen to display the Communication screen.
2. Select Favourites to display the favourites list.
3. Select Add/Edit Communication Favourites.
4. Select Move.
5. The contact can be moved after it is selected.
6. Slide the contact or move it using the commander switch, then select OK.

Changing contact name of your favourites

1. Select the icon on the home screen to display the Communication screen.
2. Select Favourites to display the favourites list.
3. Select Add/Edit Communication Favourites.
4. Select Rename.
5. Select the contact to display the keyboard screen.
6. If a new name is input and OK is selected, the contact name is stored.

NOTE
If the contact is long-pressed when the favourites list is displayed, the contact information can be edited (deleted, moved).

Telephone Number Input

NOTE
Practice this while parked until you are confident you can do it while driving in a non-taxing road situation. If you are not completely comfortable, make all calls from a safe parking position, and only start driving when you can devote your full attention to driving.

1. Select the icon on the home screen to display the Communication screen.
2. When Dial Phone is pressed, the dial pad is displayed.
3. Input the telephone number using the dial pad.
4. Select to make the call.

Numeral or symbol entry

Use the dial pad.

Long-press the to input +.

Select to delete the currently input value.

Long-press to delete all input values.

Redial Function

Makes a call to the last person called (latest person on outgoing call record) from the mobile phone/vehicle.

1. Press the talk button.
2. Wait for the beep sound.
3. **Say:** “Redial”

Call back Function

Makes a call to the last person who called your (latest person on incoming call record) mobile phone/vehicle.

1. Press the talk button.
2. Wait for the beep sound.
3. **Say:** “Call back”

▼Receiving an Incoming Call

When an incoming call is received, the incoming call notification screen is displayed. The "Incoming Call Notifications" setting must be on.
Refer to Communication Settings on page 5-132.

To accept the call, press the pick-up button on the audio control switch or select Answer on the screen.

To reject the call, press the hang-up button on the audio control switch or select Ignore on the screen.
The following icons are displayed on the screen during a call. Icons which can be used differ depending on use conditions.

Icon	Function
	Displays the Communication menu.
	Ends the call.
	Transferring a call from hands-free to a mobile phone Communication between the Bluetooth® unit and a device (mobile phone) is cancelled, and an incoming call will be received by the device (mobile phone) like a standard call.
	Transferring a call from a device (mobile phone) to hands-free Communication between devices (mobile phone) can be switched to Bluetooth® Hands-Free.
	Mute The microphone can be muted during a call. When selected again, the mute is cancelled.
	A call is made to other person during a call and a 3-way call can be made. Select the contact from the following to make a call. Call History: Call History is displayed. Contacts: The phonebook is displayed. Dial: The dial pad is displayed. Input the phone number. The device may be unusable depending on the contractual content.
	The call on hold is made to make a 3-way call. The device may be unusable depending on the contractual content.
	Switches the call on hold.
	DTMF (Dual Tone Multi-Frequency Signal) Transmission This function is used when transmitting DTMF via the dial pad. The receiver of a DTMF transmission is generally a home telephone answering machine or a company's automated guidance call centre. Input the number using a dial pad.

NOTE

- If the ignition is switched off during a hands-free call, the line is transferred to the device (Mobile phone) automatically.
- If the DTMF code has two or more digits or symbols, each one must be transmitted individually.

▼Call Interrupt

A call can be interrupted to receive an incoming call from a third party.

When Hold + Answer is selected or the pick-up button on the steering wheel is pressed, the current call is held and the system switches to the new incoming call.

When End + Answer is selected, the current call is ended and the system switches to the new incoming call (GSM network only).

When Ignore is selected or the hang-up button on the steering wheel is pressed, an incoming call is refused.

NOTE

- The function may not be available depending on the contractual content of the mobile device.
- The function may not be operable depending on the type of the telephone network and the mobile device.

▼Receiving and Replying to Messages (available only with E-mail/SMS compatible phones)

SMS (Short Message Service) messages, and E-mail received by connected devices can be downloaded, displayed, and played (read by the system).
Additionally, replies can also be made to calls and messages in the received messages.

Downloading messages

Up to 20 new messages can be downloaded and displayed from a connected device.

NOTE

For e-mail, 20 messages for each account can be downloaded.

(Automatic downloading)

The “Auto Download Email” (E-mail) or “Auto Download SMS” (SMS) setting must be on. A message is downloaded automatically when the Bluetooth® unit is connected to the device.
Refer to Communication Settings on page 5-132.

(Manually downloading)

When the “Auto Download Email” (E-mail) or “Auto Download SMS” (SMS) setting is off, the message is downloaded using the following procedure.

1. Select the icon on the home screen to display the Communication screen.
2. Select Email or SMS to display the Inbox.
3. Select Update Inbox.

4. Download will be started from the mobile phone.

NOTE

- Attached data is not downloaded.
- Messages up to 1 kilobyte (e-mail)/140-bytes (SMS) can be downloaded.
- A message list is created for each device.
- If the connected device does not correspond to MAP 1.0, the AT command is used to download. The downloaded message indicates that it is already read.
- Downloading using the AT command may not function depending on the connected device.

Receiving messages

(Method 1)

When a device receives a message, a message received notification is displayed. The “Email Notifications” (E-mail) or “SMS Notifications” (SMS) setting must be on.
Refer to Communication Settings on page 5-132.

Select Read and display the message.

(Method 2)

1. Select the icon on the home screen to display the Communication screen.
2. Select Notifications and display the new message list for e-mail and SMS.
3. Select the message you would like to display.

The following icons are displayed in the lower part of the details on the message. Icons which can be used differ depending on use conditions.

Icon	Function
	Displays the Communication menu.
	Displays the inbox.
	Plays back a message. When selected again, playback is temporarily stopped.
	Displays the previous message.
	Displays the next message.
	Only replies to the sender of the currently displayed message. Select the sentence on the displayed reply screen and select the sentence for sending from the preset message. Select Send.
	(Only E-mail) Replies to all members including CC. Select the sentence on the displayed reply screen and select the sentence for sending from the preset message. Select Send.
	Makes a call to a person who sent a message. For E-mail, this function may not work depending on the device.
	Deletes a message. The messages stored in a device is also deleted.

NOTE
Up to three preset messages can be selected.

Example of use (verify unread E-mail)

1. Select the icon on the home screen to display the Communication screen.
2. Select Email to display the inbox.

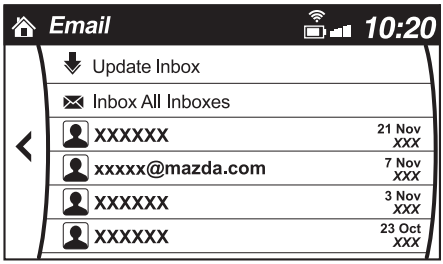

3. Select the unread message displayed in bold.
4. The details of the message are displayed and replying to the message, making a call, or playback can be performed.

Changing account for displaying (E-mail only)

1. Select Inbox.
2. Select the account which you would like to display. Only the messages for the selected account are displayed in the inbox.

Editing preset messages

1. Select the icon on the home screen to display the Communication screen.
2. Select Settings.
3. Select Preset Messages.
4. Select the preset message which you would like to edit. The keyboard screen is displayed.
5. When the message is input and ✔ is selected, the message is stored as a preset message.

NOTE

- Select the icon to change the language.
- Select the ⬆ icon to switch between capitalized and lower-case characters.
- Select the ⊗ icon to return to the previous screen without storing the edit.

▼Communication Settings

Select the icon on the home screen to display the Communication screen.

Select Settings to change the setting.

Item	Setting	Function
Bluetooth®	—	Go to Bluetooth® setting menu. Refer to Bluetooth® Preparation (Type C/Type D) on page 5-111.
Incoming Call Notifications	On/Off	Notifies when an incoming call is received.
Auto Download SMS	On/Off	Downloads SMS automatically when the Bluetooth® unit is connected to the device.
SMS Notifications	On/Off	Notifies when a new SMS is received.
Auto Download Email*1	On/Off	Downloads E-mail automatically when the Bluetooth® unit is connected to the device.
Email Notifications	On/Off	Notifies when a new Email is received.
Auto Download Call History	On/Off	Downloads Call History automatically when the Bluetooth® unit is connected to the device.
Auto Download Contacts*1	On/Off	Downloads the phonebook automatically when the Bluetooth® unit is connected to the device.
Ringtone	Fixed/In-band/ Off	Changes the ringtone setting.
Phone Volume	Adjusts using the slider.	Adjusts the conversation volume.
VR and Ringtone	Adjusts using the slider.	Adjusts the voice guidance and ringtone volume.
Contacts Sort Order	First Name, Last Name	Displays the contact information in alphabetical order of the first name.
	Last Name, First Name	Displays the contact information in alphabetical order of the last name.
Preset Messages	—	Edits the preset message. Refer to Receiving and Replying to Messages (available only with E-mail/SMS compatible phones) on page 5-128.
Reset	—	Initializes all Communication Settings.

*1 Depending on the device, it may be necessary to acquire download permission on the device side.

Bluetooth® Audio (Type A/Type B)*

Applicable Bluetooth® specification (Recommended)
Ver. 2.0

Response profile

- A2DP (Advanced Audio Distribution Profile) Ver. 1.0/1.2
- AVRCP (Audio/Video Remote Control Profile) Ver. 1.0/1.3

A2DP is a profile which transmits only audio to the Bluetooth® unit. If your Bluetooth® audio device corresponds only to A2DP, but not AVRCP, you cannot operate it using the control panel of the vehicle's audio system. In this case, only the operations on the mobile device are available the same as when a portable audio device for a non-compliant Bluetooth® device is connected to the AUX terminal.

Function	A2DP	AVRCP	
		Ver. 1.0	Ver. 1.3
Playback	—	X	X
Pause	—	X	X
File (Track) up/down	—	X	X
Reverse	—	—	X
Fast-forward	—	—	X
Text display	—	—	X

X: Available
—: Not available

NOTE

- The battery consumption of Bluetooth® audio devices increases while Bluetooth® is connected.
- If a general mobile phone device is USB connected during music playback over the Bluetooth® connection, the Bluetooth® connection is disconnected. For this reason, you cannot have music playback over a Bluetooth® connection and music playback using a USB connection at the same time.
- The system may not operate normally depending on the Bluetooth® audio device.

▼How to Use the Bluetooth® Audio System

Switching to Bluetooth® audio mode

To listen to music or voice audio recorded to a Bluetooth® audio device, switch to the Bluetooth® audio mode to operate the audio device using the audio system control panel. Any Bluetooth® audio device must be paired to the vehicle's Bluetooth® unit before it can be used. Refer to Bluetooth® Preparation (Type A/Type B) on page 5-94.

1. Turn on the Bluetooth® audio device's power.
2. Switch the ignition to ACC or ON.

   Make sure that the "♪" symbol is displayed in the audio display. The symbol is not displayed if an un-paired Bluetooth® audio device is being used or the vehicle's Bluetooth® unit has a malfunction.

*Some models.

NOTE

Some Bluetooth® audio devices need a certain amount of time before the "♪" symbol is displayed.

3. Press the media button (**MEDIA**) to switch to the Bluetooth® audio mode and start playback.

If the current device version is lower than AVRCP Ver. 1.3: "BT Audio" is displayed.
If the current device is AVRCP Ver. 1.3: The playback time is displayed.

NOTE

- If the Bluetooth® audio device does not begin playback, press the Play/Pause button (4).
- If a call is received on a hands-free mobile phone during playback from the Bluetooth® audio device, the playback is stopped. Playback from the Bluetooth® audio device resumes after the call ends.

Playback

1. To listen to a Bluetooth® audio device over the vehicle's speaker system, switch the mode to Bluetooth® audio mode. (Refer to "Switching to Bluetooth® audio mode")
2. To stop playback, press the Play/Pause button (4).
3. Press the button again to resume playback.

Selecting a file (track)

Selects the next file (track)

Short-press the track up button (⏭).

Selects the beginning of the current file (track)

Short-press the track down button (⏮).

Fast-forward/Reverse (AVRCP Ver. 1.3)

Fast-forward

Press and hold the fast-forward button (⏭).

Reverse

Press and hold the reverse down button (⏮).

Switching the display (only AVRCP Ver. 1.3)

The information displayed on the audio display changes as follows each time the text button (3) is pressed during playback.

Button	Information displayed on audio display
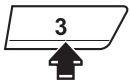	Elapsed time
	Album name
	Song name
	Artist name

NOTE

- If title information is not available, “NO TITLE” is displayed.
- This unit cannot display some characters. Characters which cannot be displayed are indicated by an asterisk (*).

Display scroll

Only 13 characters can be displayed at one time. To display the rest of the characters of a long title, press and hold the text button (3). The display scrolls the next 13 characters. Press and hold the text button (3) again after the last 13 characters have been displayed to return to the beginning of the title.

▼Bluetooth® Audio Device Information Display

If a Bluetooth® audio device is connected, the following information is displayed in the audio display.

	AVRCP Ver. lower than 1.3	AVRCP Ver. 1.3
Device name	X	X
Title	—	X
Artist name	—	X
Album name	—	X
File number	—	X
Playback time	—	X
Folder number	—	—

X: Available
—: Not available

NOTE

Some information may not display depending on the device, and if the information cannot be displayed, “NO TITLE” is indicated.

Bluetooth® Audio (Type C/Type D)*

Applicable Bluetooth® specification (Recommended)

Ver. 1.1/1.2/2.0 + EDR/2.1 + EDR/3.0 (conformity)

Response profile

- A2DP (Advanced Audio Distribution Profile) Ver. 1.0/1.2
- AVRCP (Audio/Video Remote Control Profile) Ver. 1.0/1.3/1.4

A2DP is a profile which transmits only audio to the Bluetooth® unit. If your Bluetooth® audio device corresponds only to A2DP, but not AVRCP, you cannot operate it using the control panel of the vehicle's audio system. In this case, only the operations on the mobile device are available the same as when a portable audio device for a non-compliant Bluetooth® device is connected to the AUX terminal.

Function	A2DP	AVRCP		
		Ver. 1.0	Ver. 1.3	Ver. 1.4
Playback	X	X	X	X
Pause	X	X	X	X
File (Track) up/down	—	X	X	X
Reverse	—	—	X	X
Fast-forward	—	—	X	X
Text display	—	—	X	X
Repeat	—	—	Depends on device	Depends on device
Shuffle	—	—	Depends on device	Depends on device
Scan	—	—	Depends on device	Depends on device
Folder up/ down	—	—	—	Depends on device

X: Available
—: Not available

NOTE

- The battery consumption of Bluetooth® audio devices increases while Bluetooth® is connected.
- If a general mobile phone device is USB connected during music playback over the Bluetooth® connection, the Bluetooth® connection is disconnected. For this reason, you cannot have music playback over a Bluetooth® connection and music playback using a USB connection at the same time.
- The system may not operate normally depending on the Bluetooth® audio device.

 *Some models.

▼How to Use the Bluetooth® Audio System

Switching to Bluetooth® audio mode

To listen to music or voice audio recorded to a Bluetooth® audio device, switch to the Bluetooth® audio mode to operate the audio device using the audio system control panel.
Any Bluetooth® audio device must be paired to the vehicle's Bluetooth® unit before it can be used.
Refer to Bluetooth® Preparation (Type C/Type D) on page 5-111.

1. Turn on the Bluetooth® audio device's power.
2. Switch the ignition to ACC or ON.
3. Select the ♫ icon on the home screen to display the Entertainment screen.
4. When Bluetooth is selected, switches to the Bluetooth® audio mode to begin playback.

NOTE

- If Bluetooth® audio is used after using Aha™ or Stitcher™ radio, the application on the mobile device has to be closed first.
- If the Bluetooth® audio device does not begin playback, select the ▶/II icon.
- If the mode is switched from Bluetooth® audio mode to another mode (radio mode), audio playback from the Bluetooth® audio device stops.

Playback

To listen to a Bluetooth® audio device over the vehicle's speaker system, switch the mode to Bluetooth® audio mode. (Refer to “Switching to Bluetooth® audio mode”)
After switching to the Bluetooth® audio mode, the following icons are displayed in the lower part of the display. Icons which can be used differ depending on the version of the Bluetooth® audio device which you are currently using.

Icon	Function
♫	Displays the Entertainment menu. Use to switch to a different audio source.
☰	**(AVRCP Ver. 1.4 only)** Displays the top level folder/file list. Select the folder which you want to select. The files in the selected folder are displayed. Select the file you want to play.

Icon	Function
	(AVRCP Ver. 1.3 or higher) Replays the song currently being played repeatedly. When selected again, the songs in the folder are played repeatedly. Select it again to cancel. Icons change when the song is repeated or the folder is repeated.
	(AVRCP Ver. 1.3 or higher) Plays songs in the folder in random order. When selected again, the songs on the device are played in random order. Select it again to cancel. Icons change during folder shuffle or device shuffle.
	Scans the titles in a folder and plays the beginning of each song to aid in finding a desired song. When selected again, the beginning of each song on the device is played. When selected again, the operation is cancelled and the song currently being played continues.
	Returns to the beginning of the previous song. Long-press to fast reverse. It stops when you remove your hand from the icon or the commander knob.
	Plays the Bluetooth® audio. When selected again, playback is temporarily stopped.
	Advances to the beginning of the next song. Long-press to fast forward. It stops when you remove your hand from the icon or the commander knob.
	Displays sound settings to adjust audio quality level. Refer to Volume/Display/Sound Controls on page 5-50.

Example of use (When searching for a song from the top level of a device)

1. Select the icon to display the folder/file list at the top level.

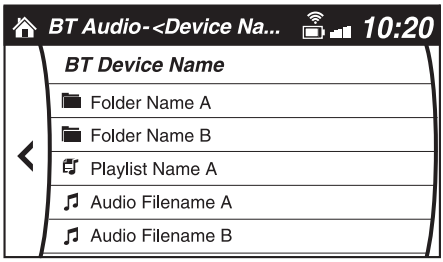

2. When the folder is selected, folders/file lists in the folder are displayed.
   When the playlist is selected, the file list is displayed.
3. Select the desired song.

NOTE

Select to move to a folder one level higher.

▼Bluetooth® Audio Device Information Display

If a Bluetooth® audio device is connected, the following information is displayed in the centre display.

	AVRCP Ver. lower than 1.3	AVRCP Ver. 1.3	AVRCP Ver. 1.4 or higher
Device name	X	X	X
Remaining battery charge of device	X	X	X
Song name	—	X	X
Artist name	—	X	X
Album name	—	X	X
Playback time	—	X	X
Genre name	—	X	X
Album art image	—	—	—

X: Available
—: Not available

NOTE

Some information may not display depending on the device, and if the information cannot be displayed, “Unknown - - -” is indicated.

▼How to Use Aha™*

Aha is an application which can be used to enjoy various Internet content such as Internet radio and podcasts.
Stay connected to your friends activities by getting updates from Facebook and Twitter.
Using the location-based service, nearby services and destinations can be searched or real-time local information can be obtained.
For details on Aha, refer to “http://www.aharadio.com/”.

*Aha, the Aha logo, and the Aha trade dress are trademarks or registered trademarks of Harman International Industries, Inc., used with permission.

NOTE

- The service content provided by Aha varies depending on the country in which the user resides. In addition, the service is not available in some countries.
- To operate Aha from your Bluetooth® device, perform the following in advance:
  - Install the Aha application to your device.
  - Create an Aha account for your device.
  - Log onto Aha using your device.
  - Select the preset station on your device.

Playback

Select the ♫ icon on the home screen to display the Entertainment screen. When aha is selected, the following icons are displayed at the bottom of the centre display. The displayed icon differs depending on the selected station.
In addition, icons other than the following icons may be displayed.

Icon	Function
♫	Displays the Entertainment menu. Use to switch to a different audio source.
☰	Displays the main menu. Use to switch to other stations.
🗀	Displays the content list. Use to switch to other desired content on the station.
🎤	**Shout** Records voice. Records voice and posts it as playable audio to Facebook and other social stations.

Icon	Function
	Like[*1] Evaluates the current content as “Like”.
	Dislike[*1] Evaluates the current content as “Dislike”.
	Reverses for 15 seconds.
	Map (vehicles with navigation system) Displays the destination searched by the location based services on the navigation system.
	Call A call can be made to the telephone number of a shop searched using the Location Based Services. Available when a device is connected as a Hands-Free.
	Returns to the previous content.
	Pauses playback of the content. When selected again, playback resumes.
	Goes to the next content.
	Fast-forwards for 30 seconds.
	Displays sound settings to adjust audio quality level. Refer to Volume/Display/Sound Controls on page 5-50.

*1 Some stations may use alternate variations of Like and Dislike, based on station type or provider.

Main menu

Select the ☰ icon.

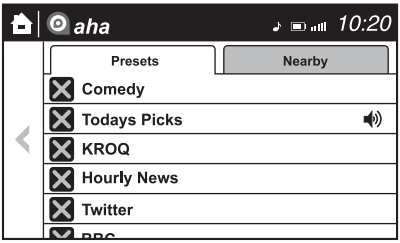

Switch the tab and select the station category.

Tab	Function
Presets	Displays the preset station list set on the device. Select the preset station name to play the station content.
Nearby	Select the desired station. Guidance is provided to the searched destination near the vehicle's position. You can designate desired categories previously set using the filter setting on your device.

NOTE
The available Location Based Services may differ because the services depend on the content provided by Aha™.

Example of use (Location Based Services)

1. Select the desired station from the “Nearby” tab on the main menu.
   The destination name or address playback starts in the order of the destination name list.

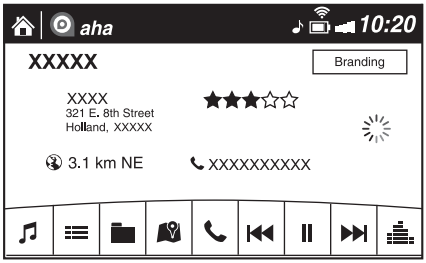

2. When the icon is selected, the currently displayed destination is displayed on the navigation system (vehicles with navigation system).
3. When the icon is selected, a phone call is placed to the currently displayed destination.
4. Select the icon to display the content list.
   Selection of other destinations from the list can be made.

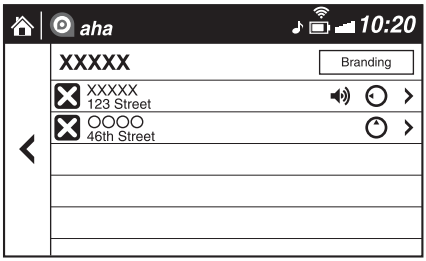

Shout

Some social stations, such as Facebook or Caraoke, support the ability to record and share voice messages using the “Shout” function.

1. Select the icon and start the countdown (3, 2, 1, 0). Recording starts when the countdown reaches zero.
2. Records voice.
3. Select Save and store/post the recording.

NOTE

- Recordable time varies depending on the station (Max. 30 seconds).
- Recording stops automatically when the recordable time has elapsed. You can then post or delete the recording.

▼How to Use Stitcher™* Radio

What is Stitcher™ Radio?

Stitcher™ radio is an application which can be used to listen to Internet radio or stream podcasts.
Recommended content is automatically selected by registering content which you put into your favourites, or by pressing the Like or Dislike button.
For details on Stitcher™ Radio, refer to “http://stitcher.com/”.

*Stitcher™, the Stitcher™ logo, and the Stitcher™ trade dress are trademarks or registered trademarks of Stitcher, Inc., used with permission.

NOTE
To operate Stitcher™ Radio from your Bluetooth® device, perform the following in advance: • Install the Stitcher™ Radio application to your device. • Create a Stitcher™ Radio account for your device. • Log onto Stitcher™ Radio using your device.

Playback

Select the ♫ icon on the home screen to display the Entertainment screen. When Stitcher is selected, the following icons are indicated in the bottom part of the centre display.

Icon	Function
♫	Displays the Entertainment menu. Use to switch to a different audio source.
☰	Displays the station list. Use to switch to other stations.
👎	**Dislike** Evaluates the current programme as “Dislike”.
👍	**Like** Evaluates the current programme as “Like”.
★	Adds the current station to your favourites or deletes the current station from your favourites.

Icon	Function
:30	Reverses for 30 seconds.
▶/❚❚	Plays the station. Select it again to pause playback.
▶▶❚	Goes to the next station.
	Displays sound settings to adjust audio quality level. Refer to Volume/Display/Sound Controls on page 5-50.

Station list

1. Select the icon to display the station list.

   ① Favourites station name: Select to display the programme registered to your favourites.
   ② Category name: A recommended category selected from your favourites by Stitcher™ is displayed.
   Select it to display the category programme.

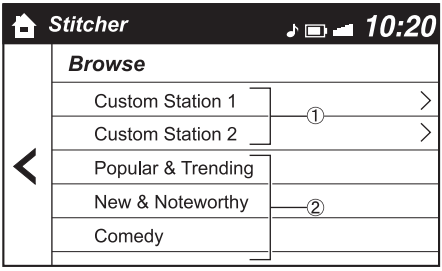

2. Select the programme name to play it.

Add to your favourites

If the current programme has not been registered to your favourites, it can be registered to your favourites.

1. Select the ★ icon to display the favourites station which the registration can be added.
2. Select the station name which you want to register.
3. Select OK to add the programme to the selected favourites station.

NOTE

- Multiple favourites stations can be selected and registered.
- Favourites stations registered by oneself as well those set by default are displayed.

Delete from your favourites

If the current programme has already been registered to your favourites, the programme can be deleted from your favourites.

1. Select the ★ icon.
2. The programme is automatically deleted from the favourites station.

Troubleshooting*

Mazda Bluetooth® Hands-Free Customer Service

If you have any problems with Bluetooth®, contact our toll-free customer service centre.
Phone:
(Germany)
0800 4263 738 (8:00—18:00 Central European Time)
(Except Germany)
00800 4263 7383 (8:00—18:00 Central European Time)
(Worldwide)

+ 49 (0) 6838 907 287 (8:00—18:00 Central European Time)
Web:
http://www.mazdahandsfree.com

Bluetooth® Device pairing, connection problems

Symptom	Cause	Solution method
Unable to perform pairing	—	First make sure the device is compatible with the Bluetooth® unit, and then check whether the Bluetooth® function and the Find Mode/Visible setting*1 on the device are turned on. If pairing is still not possible after this, contact an expert repairer, we recommend an Authorised Mazda Repairer or Mazda Bluetooth® Hands-Free Customer Service.
Pairing cannot be performed again	The pairing information paired to the Bluetooth® unit or device is not recognised correctly.	Perform pairing using the following procedure. •Clear “Mazda” stored in the device. •Perform pairing again.
Unable to perform pairing	The Bluetooth® function and the Find Mode/Visible setting*1 on the device may turn off automatically after a period of time has elapsed depending on the device.	Check whether the Bluetooth® function and the Find Mode/Visible setting*1 on the device are turned on and pairing or reconnect.
Does not connect automatically when starting the engine		
Automatically connects, but then disconnects suddenly		
Disconnects intermittently	The device is in a location in which radio wave interference can occur easily, such as inside a bag in a rear seat, in a rear pocket of a pair of pants.	Move the device to a location in which radio wave interference is less likely to occur.
Does not connect automatically when starting the engine	The pairing information is updated when the device OS is updated.	Perform pairing again.

*1 Setting which detects the existence of a device external to the Bluetooth® unit

NOTE

- When the OS of the device is updated, the pairing information may be deleted. If this happens, reprogramme the pairing information to the Bluetooth® unit.
- If you pair your phone which has already been paired to your vehicle more than once in the past, you need to delete “Mazda” on your mobile device. Then, execute the Bluetooth® search on your mobile device once again, and pair to a newly detected “Mazda”.
- Before you pair your device, make sure that Bluetooth® is “ON”, both on your phone and on the vehicle.

Voice recognition related problems

Symptom	Cause	Solution method
Poor voice recognition	•Excessive, slow speech. •Excessive, forceful speech (shouting). •Speaking before the beep sound has ended. •Loud noise (speaking or noise from outside/inside vehicle). •Airflow from A/C is blowing against the microphone. •Speaking in off-standard expressions (dialect).	Regarding the causes indicated on the left, be careful with how you speak. In addition, when numbers are spoken in a sequence, recognition ability will improve if no stop is placed between the numbers.
False recognition of numbers		
Poor voice recognition	There is a malfunction in the microphone.	A poor connection or malfunction with the microphone may have occurred. Consult an expert repairer, we recommend an Authorised Mazda Repairer.
Phone-related voice recognition is disabled	There is a problem with the connection between the Bluetooth® unit and the device.	If there is any malfunction after checking the pairing situation, check for device pairing or connection problems.
Names in the phonebook are not easily recognised	The Bluetooth® system is under a condition in which recognition is difficult.	By carrying out the following measures, the rate of recognition will improve. •Clear memory from the phonebook which is not used very often. •Avoid shortened names, use full names. (Recognition improves the longer the name is. By not using names such as “Mum”, “Dad”, recognition will improve.)
When operating the audio, a song name is not recognised	Song names cannot be recognised by voice.	—

Symptom	Cause	Solution method
You want to skip guidance	—	Guidance can be skipped by quickly pressing and releasing the Talk button.

Regarding problems with calls

Symptom	Cause	Solution method
When starting a call, vehicle noise from the other party can be heard	For about three seconds after starting a call, the Bluetooth® unit's Noise Suppression function requires time to adapt to the call environment.	This does not indicate a problem with the device.
The other party cannot be heard or the speaker's voice is quiet	The volume is set at zero or low.	Increase the volume.

Other problems

Symptom	Cause	Solution method
The indication for the remaining battery is different between the vehicle and the device	The indication method is different between the vehicle and the device.	—
When a call is made from the vehicle, the telephone number is updated in the incoming/outgoing call record but the name does not appear	The number has not been registered into the phonebook.	If the number has been registered into the phonebook, the incoming/outgoing call record is updated by the name in the phonebook when the engine is restarted.
The cell phone does not synchronize with the vehicle regarding the incoming/outgoing call record	Some types of cell phones do not synchronize automatically.	Operate the cell phone for synchronization.
It takes a long time to complete the function for changing the language	A maximum of 60 seconds is required.	—

Sunvisors

When you need a sunvisor, lower it for use in front or swing it to the side.

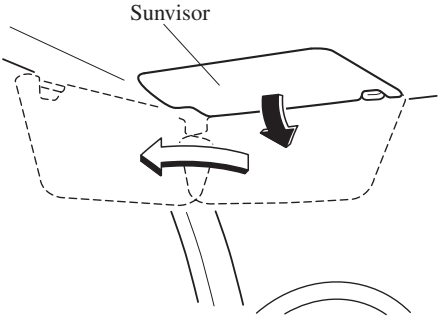

▼Vanity Mirrors

To use the vanity mirror, lower the sunvisor.

Interior Lights

Overhead Lights

Switch Position	Overhead Lights
OFF	Light off
DOOR	•Light is on when any door is open •Light is on or off when the illuminated entry system is on
ON	Light on

Front

With Map Lights

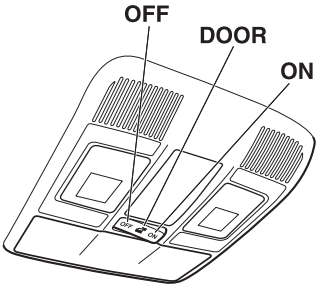

Without Map Lights

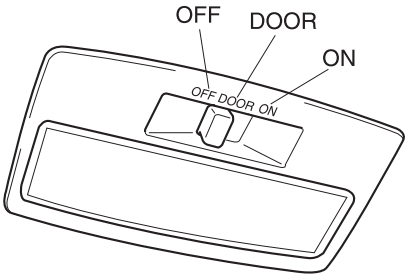

Rear*

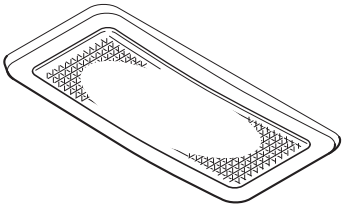

NOTE
(With map lights) The rear overhead light also turn on and off when the front overhead light switch is operated.

Map Lights*

When the overhead light switch is in the door or off position, press the lens to illuminate the map lights, and then press the lens again to turn them off.

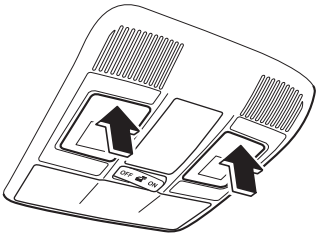

NOTE
The map lights will not turn off even if the lens is pressed in the following cases: • The overhead light switch is in the ON position. • The overhead light switch is in the door position with the door open. • The illuminated entry system is on.

Luggage Compartment Lights (Hatchback)

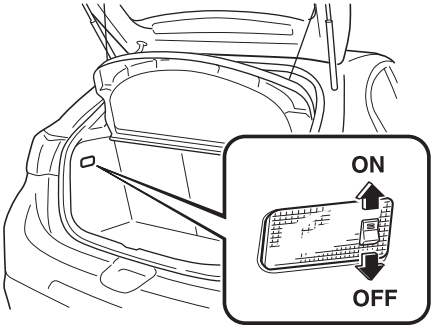

Switch Position	Luggage Compartment Light
OFF	Light off
ON	Light on when the liftgate is open

Boot Light (Saloon)

The boot light is on when the lid is open and off when it's closed.

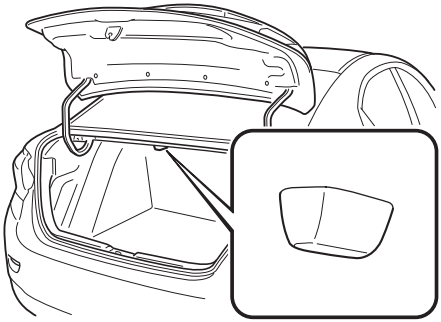

NOTE
To prevent the battery from being discharged, do not leave the boot open for a long period when the engine is not running.

▼Illuminated Entry System

The overhead lights turn on when any of the following operations is done with the overhead light switch in the DOOR position and the ignition switched off.

- Turn on for about 30 seconds when the driver's door is unlocked.
- Turn on for about 15 seconds when a door is opened with a key left in the vehicle and then the door is closed.
- Turn on for about 5 seconds when a door is opened from the outside with a key being carried and then the door is closed.

The overhead lights turn on for about 15 seconds when the ignition is switched off with the overhead light switch in the DOOR position.
The overhead lights turn off immediately in the following cases:

- The ignition is switched on and all doors are closed.
- The driver's door is locked.

NOTE

- **Battery saver**
  If any door is left open with the overhead light switch in the DOOR position, or the liftgate/boot lid is left open, the overhead light or luggage compartment light/boot light turns off after about 30 minutes to prevent battery depletion.
- To prevent battery depletion, if the interior lights remain turned on (the interior light switch is in the ON position or an interior light is turned on by pressing the lens of the interior light), they turn off automatically under the following conditions:
  - No operations are done for about 30 minutes after the ignition is switched off.
  - When the LOCK button on the key is pressed or the request switch is pressed to lock the doors on vehicles with the advanced keyless function after the ignition is switched off (interior lights turn off a few seconds).

  In addition, if the following operations are performed after turning the interior lights off, they will turn on again.

  - The ignition is switched to a position other than OFF.
  - A door is opened.
  - A door is unlocked.
- The operation of the illuminated entry system can be changed.
  Refer to Personalisation Features on page 9-13.

Accessory Sockets

Only use genuine Mazda accessories or the equivalent requiring no greater than 120 W (DC 12 V, 10 A).
The ignition must be switched to ACC or ON.

Type A

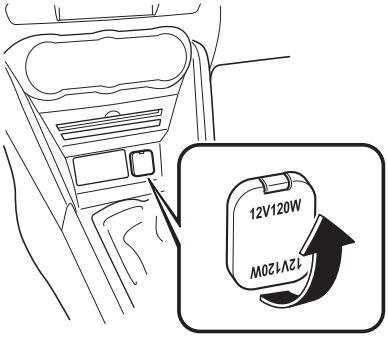

Type B

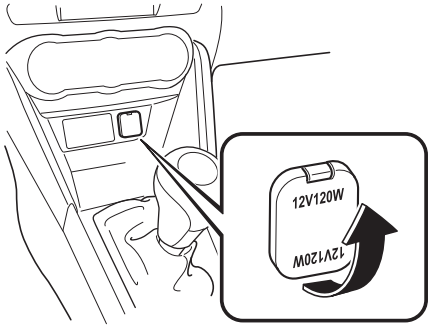

⚠ CAUTION

- To prevent accessory socket damage or electrical failure, pay attention to the following:
  - Do not use accessories that require more than 120 W (DC 12 V, 10 A).
  - Do not use accessories that are not genuine Mazda accessories or the equivalent.
  - Close the cover when the accessory socket is not in use to prevent foreign objects and liquids from getting into the accessory socket.
  - Correctly insert the plug into the accessory socket.
  - Do not insert the cigarette lighter into the accessory socket.
- Noise may occur on the audio playback depending on the device connected to the accessory socket.
- Depending on the device connected to the accessory socket, the vehicle's electrical system may be affected, which could cause the warning light to illuminate. Disconnect the connected device and make sure that the problem is resolved. If the problem is resolved, disconnect the device from the socket and switch the ignition off. If the problem is not resolved, consult an expert repairer, we recommend an Authorised Mazda Repairer.

NOTE

To prevent discharging of the battery, do not use the socket for long periods with the engine off or idling.

Cup Holder

⚠ *WARNING*

Never use a cup holder to hold hot liquids while the vehicle is moving:
Using a cup holder to hold hot liquids while the vehicle is moving is dangerous. If the contents spill, you could be scalded.

Do not put anything other than cups or drink cans in cup holders:
Putting objects other than cups or drink cans in a cup holder is dangerous.
During sudden braking or manoeuvring, occupants could be hit and injured, or objects could be thrown around the vehicle, causing interference with the driver and the possibility of an accident. Only use a cup holder for cups or drink cans.

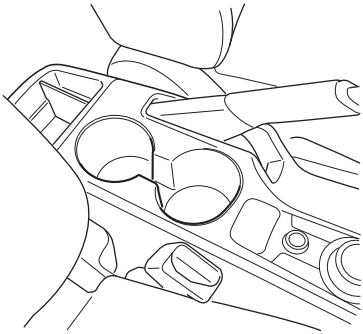

Bottle Holder

Bottle holders are on the inside of the front doors.

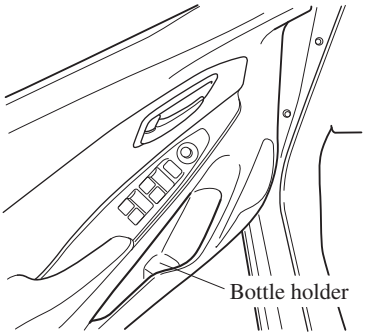

⚠ CAUTION

Do not use the bottle holders for containers without caps. The contents may spill when the door is opened or closed.

Storage Compartments

⚠ *WARNING*

Keep storage boxes closed when driving:
Driving with the storage boxes open is dangerous. To reduce the possibility of injury in an accident or a sudden stop, keep the storage boxes closed when driving.

Do not put articles in storage spaces with no lid:
Putting articles in storage spaces with no lid is dangerous as they could be thrown around the cabin if the vehicle is suddenly accelerated and cause injury depending on how the article is stored.

⚠ CAUTION

Do not leave lighters or eyeglasses in the storage boxes while parked under the sun. A lighter could explode or the plastic material in eyeglasses could deform and crack from high temperature.

▼Overhead Console*

This console box is designed to store eyeglasses or other accessories.
Push and release to open.

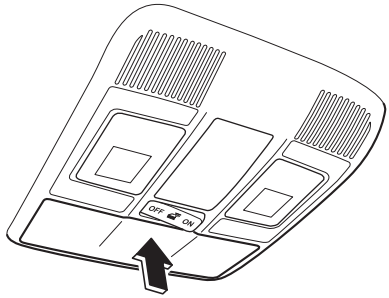

▼Glove Compartment

To open the glove compartment, pull the latch toward you.

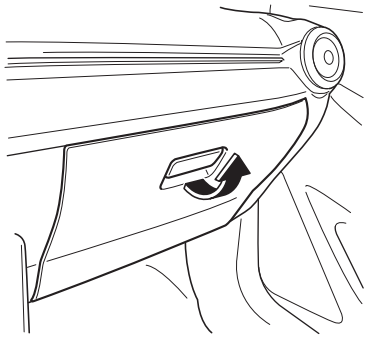

To close the glove compartment, firmly press in the centre of the glove compartment lid.

*Some models.

▼Centre Console Tray

⚠ *WARNING*

Never use a cup holder to hold hot liquids while the vehicle is moving:
Using a cup holder to hold hot liquids while the vehicle is moving is dangerous. If the contents spill, you could be scalded.

A cup or small items can be placed on the centre console tray using the centre console divider.
The centre console tray is large enough to place a small item when the centre console divider is not in use.

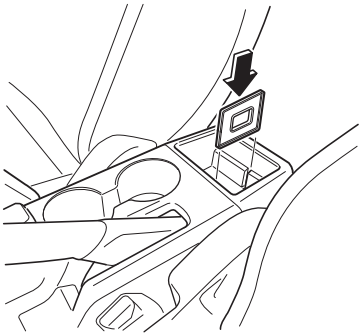

▼Cargo Sub-Compartment

Lift the boot mat.
(Hatchback)

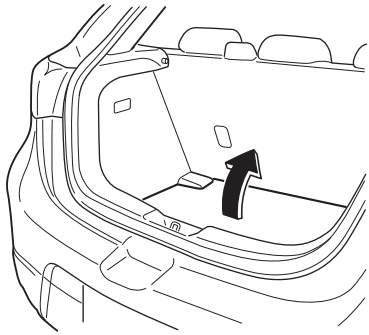

(Saloon)

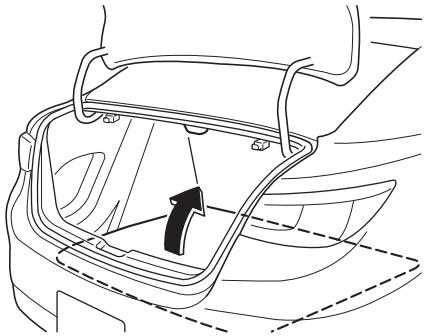

▼Rear Coat Hooks

⚠ *WARNING*

Never hang heavy or sharp objects on the assist grips and coat hooks:
Hanging heavy or sharp-ended objects such as a coat hanger from the assist grips or coat hooks is dangerous as they can fly off and hit an occupant in the cabin if a curtain air bag was to deploy, which could result in serious injury or death.

Always hang clothes on the coat hooks and the assist grips without hangers.

Type A

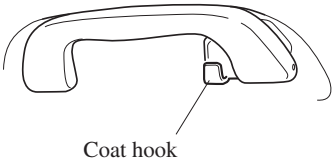

Type B

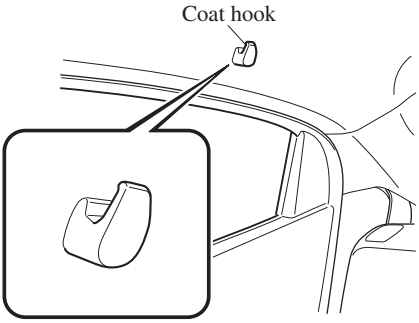

Removable Ashtray*

The removable ashtray can be fixed and used in either of the front cup holders.

⚠ *WARNING*

Only use the removable ashtray in its fixed position, and make sure it is completely inserted:
Using an ashtray removed from its fixed position or not completely inserted is dangerous. Cigarettes could roll around or spill out of the ashtray into the vehicle and start a fire. Moreover, cigarette stubs will not extinguish themselves completely even if the ashtray lid is closed.

⚠ CAUTION

Do not use the ashtray for rubbish. You might start a fire.

To use the ashtray, insert it straight into the cup holder.
To remove the ashtray, pull it upward.

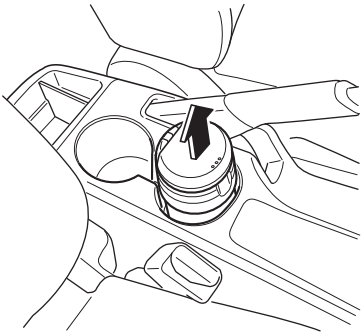

*Some models.

MEMO

6 Maintenance and Care

How to keep your Mazda in top condition.

Essential Information 6-2
Introduction 6-2

Scheduled Maintenance 6-3
Scheduled Maintenance 6-3
Maintenance Monitor 6-15

Owner Maintenance 6-17
Owner Maintenance Precautions 6-17
Bonnet 6-19
Engine Compartment Overview 6-21
Engine Oil 6-23
Engine Coolant 6-29
Brake/Clutch Fluid 6-31
Window and Headlight Washer Fluid 6-32
Body Lubrication 6-32
Wiper Blades 6-33
Battery 6-38
Key Battery Replacement 6-41
Tyres 6-43
Light Bulbs 6-48
Fuses 6-61

Appearance Care 6-67
Exterior Care 6-67
Interior Care 6-73

Introduction

Be extremely careful and prevent injury to yourself and others or damage to your vehicle when using this manual for inspection and maintenance.

If you are unsure about any procedure it describes, we strongly urge you to have a reliable and qualified technician perform the work, we recommend an Authorised Mazda Repairer.

Authorised Mazda technicians and genuine Mazda parts are dedicated to your vehicle. Without this expertise and the parts that have been designed and made especially for your Mazda, inadequate, incomplete, and insufficient servicing may result in problems. This could lead to vehicle damage or an accident and injuries.

For expert advice and quality service, consult an expert repairer, we recommend an Authorised Mazda Repairer.

The owner should retain evidence that proper maintenance has been performed as prescribed.

A claim against a warranty will not qualify if it results from lack of maintenance and not from defective material or authorised workmanship.

Scheduled Maintenance

NOTE
After the prescribed period, continue to follow the described maintenance at the recommended intervals.

Emission control and related systems
The ignition and fuel systems are highly important to the emission control system and to efficient engine operation. Do not tamper with them.
All inspections and adjustments must be made by an expert repairer, we recommend an Authorised Mazda Repairer.

Scheduled Maintenance

▼Europe

Maintenance Interval		Number of months or kilometres (miles), whichever comes first.								
		Months	12	24	36	48	60	72	84	96	108
		×1000 km	20	40	60	80	100	120	140	160	180
		×1000 miles	12.5	25	37.5	50	62.5	75	87.5	100	112.5
SKYACTIV-G 1.5											
Spark plugs[*1]			Replace every 120,000 km (75,000 miles).								
Air filter[*2]					R			R			R
Evaporative system (if installed)					I			I			I
SKYACTIV-D 1.5											
Fuel filter			D	D	R	D	D	R	D	D	R
Fuel injection system[*3]			I			I			I		
Air filter[*2]			C	C	R	C	C	R	C	C	R
SKYACTIV-G 1.5 AND SKYACTIV-D 1.5											
Drive belts[*4]					I			I			I
Engine oil & filter	Flexible[*5]		Replace when indicator is ON. (Max interval: 12 months/20,000 km (12,500 miles))								
	Other than flexible[*6*7]		R	R	R	R	R	R	R	R	R
Cooling system				I		I		I		I	
Engine coolant[*8]			Replace at first 200,000 km (125,000 miles) or 10 years; after that, every 100,000 km (62,500 miles) or 5 years.								
Fuel lines and hoses				I		I		I		I	
Battery[*9]			I	I	I	I	I	I	I	I	I
Brake lines, hoses and connections			I	I	I	I	I	I	I	I	I
Brake fluid[*10]				R		R		R		R	
Parking brake			I	I	I	I	I	I	I	I	I
Disc brakes			I	I	I	I	I	I	I	I	I
Drum brakes				I		I		I		I	
Steering operation and linkages				I		I		I		I	
Manual transaxle oil			Replace every 180,000 km (112,500 miles).								
Front and rear suspension, ball joints and wheel bearing axial play				I		I		I		I	
Driveshaft dust boots				I		I		I		I	
Exhaust system and heat shields			Inspect every 80,000 km (50,000 miles) or 5 years.								
Bolts and nuts on chassis and body				T		T		T		T	
Body condition (for rust, corrosion and perforation)			Inspect annually.								
Cabin air filter (if installed)				R		R		R		R	

Maintenance Interval	Number of months or kilometres (miles), whichever comes first.									
	Months	12	24	36	48	60	72	84	96	108
	×1000 km	20	40	60	80	100	120	140	160	180
	×1000 miles	12.5	25	37.5	50	62.5	75	87.5	100	112.5
Tyres (including spare tyre) (with inflation pressure adjustment)*11*12		I	I	I	I	I	I	I	I	I
Emergency flat tyre repair kit (if installed)*13		Inspect annually.								

Chart symbols:

I: Inspect: Inspect and clean, repair, adjust, fill up, or replace if necessary.
R: Replace
C: Clean
T: Tighten
L: Lubricate
D: Drain

Remarks:

*1 In the countries below, inspect the spark plugs at every 10,000 km (6,250 miles) or 12 months before replacing them at the said interval.
Albania, Bosnia and Herzegovina, Bulgaria, Croatia, Latvia, Macedonia, Moldova, Montenegro, Romania, Serbia, Ukraine

*2 If the vehicle is operated in very dusty or sandy areas, clean and if necessary, replace the air filter more often than the recommended intervals.

*3 Implement the fuel injection amount correction.

*4 Also inspect the air conditioner drive belts, if installed.
If the vehicle is operated primarily under any of the following conditions, inspect the drive belts at every 20,000 km (12,500 miles) or 12 months .

a) Driving in dusty conditions
b) Extended periods of idling or low speed operation
c) Driving for long period in cold temperatures or driving regularly at short distance only
d) Driving in extremely hot conditions
e) Driving in mountainous conditions continually

*5 SKYACTIV-G 1.5 vehicles can select flexible setting only some countries in Europe. Consult an Authorised Mazda Repairer for details. Flexible setting can be set if the vehicle is operated mainly where none of the following conditions apply.

a) Purpose of vehicle use is police car, taxi or driving school car.
b) Driving in dusty conditions
c) Extended periods of idling or low speed operation

Once the flexible maintenance is selected, the vehicle calculates the remaining oil life based on engine operating conditions and lets you know when an oil change is due by illuminating the wrench indicator light in the instrument cluster.
Replace the engine oil and filter when message/wrench indicator light is ON. And they must be changed at least once a year or within 20,000 km (12,500 miles) since last engine oil and filter change.
The system must be reset whenever replacing the engine oil regardless of the message/wrench indicator light display.

*6 If the vehicle is operated primarily under any of the following conditions, replace the engine oil and oil filter at every 10,000 km (6,250 miles) or shorter.

a) Purpose of vehicle use is police car, taxi or driving school car.
b) Driving in dusty conditions
c) Extended periods of idling or low speed operation
d) Driving for long period in cold temperatures or driving regularly at short distance only
e) Driving in extremely hot conditions
f) Driving in mountainous conditions continually

*7 For SKYACTIV-D 1.5, reset the engine oil data after replacing the engine oil.
*8 Use of FL-22 is recommended when replacing engine coolant. Using engine coolant other than FL-22 may cause serious damage to the engine and cooling system.
*9 Inspect the battery electrolyte level, specific gravity and outer appearance. The sealed battery only requires an outer appearance inspection.
*10 If the brakes are used extensively (for example, continuous hard driving or mountain driving) or if the vehicle is operated in extremely humid climates, replace the brake fluid annually.
*11 Tyre rotation is recommended every 10,000 km (6,250 miles).
*12 The Tyre Pressure Monitoring System (TPMS) initialization must be performed so that the system operates normally (if equipped).
*13 Check the tyre repair fluid expiration date every year when performing the periodic maintenance. Replace the tyre repair fluid bottle with new one before the expiration date.

▼Except Europe

Israel

Maintenance Interval	Number of months or kilometres, whichever comes first											
	Months	12	24	36	48	60	72	84	96	108	120	132	144
	×1000 km	15	30	45	60	75	90	105	120	135	150	165	180
SKYACTIV-G 1.5													
Spark plugs	Replace every 120,000 km or 6 years.												
Fuel filter	Replace every 135,000 km.												
Evaporative system (if installed)				I				I				I
Fuel lines and hoses		I		I		I		I		I		I
SKYACTIV-D 1.5													
Fuel filter	D	D	R	D	D	R	D	D	R	D	D	R
Fuel injection system*1	I			I			I			I		
Fuel lines and hoses	I	I	I	I	I	I	I	I	I	I	I	I
SKYACTIV-G 1.5 AND SKYACTIV-D 1.5													
Drive belts*2	I	I	I	I	I	I	I	I	I	I	I	I
Engine oil & oil filter*3*4	R	R	R	R	R	R	R	R	R	R	R	R
Air filter*5	C	C	C	R	C	C	C	R	C	C	C	R
Cooling system		I		I		I		I		I		I
Engine coolant*6	Replace at first 195,000 km or 10 years; after that, every 90,000 km or 5 years.											
Battery*7	I	I	I	I	I	I	I	I	I	I	I	I
Brake lines, hoses and connections	I	I	I	I	I	I	I	I	I	I	I	I
Brake fluid*8	I	R	I	R	I	R	I	R	I	R	I	R
Parking brake	I	I	I	I	I	I	I	I	I	I	I	I
Power brake unit (Brake booster) and hoses	I	I	I	I	I	I	I	I	I	I	I	I
Disc brakes	I	I	I	I	I	I	I	I	I	I	I	I
Drum brakes		I		I		I		I		I		I
Steering operation and linkages		I		I		I		I		I		I
Manual transaxle oil	Replace every 100,000 km or 5 years.											
Front and rear suspension, ball joints and wheel bearing axial play	I	I	I	I	I	I	I	I	I	I	I	I
Driveshaft dust boots			I			I			I			I
Exhaust system and heat shields	Inspect every 75,000 km.											
Bolts and nuts on chassis and body	T	T	T	T	T	T	T	T	T	T	T	T
Body condition (for rust, corrosion and perforation)	Inspect annually.											
Cabin air filter (if installed)	R	R	R	R	R	R	R	R	R	R	R	R

Scheduled Maintenance

Maintenance Interval	Number of months or kilometres, whichever comes first												
	Months	**12**	**24**	**36**	**48**	**60**	**72**	**84**	**96**	**108**	**120**	**132**	**144**
	×1000 km	**15**	**30**	**45**	**60**	**75**	**90**	**105**	**120**	**135**	**150**	**165**	**180**
Tyres (including spare tyre) (with inflation pressure adjustment)*9		I	I	I	I	I	I	I	I	I	I	I	I
Emergency flat tyre repair kit (if installed)*10		Inspect annually.											

Chart symbols:

I: Inspect: Inspect and clean, repair, adjust, fill up, or replace if necessary.
R: Replace
C: Clean
T: Tighten
L: Lubricate
D: Drain

Remarks:

*1 Implement the fuel injection amount correction.
*2 Also inspect the air conditioner drive belts, if installed.
If the vehicle is operated primarily under any of the following conditions, inspect the drive belts at every 10,000 km or shorter.

a) Driving in dusty conditions
b) Extended periods of idling or low speed operation
c) Driving for long period in cold temperatures or driving regularly at short distance only
d) Driving in extremely hot conditions
e) Driving in mountainous conditions continually

*3 If the vehicle is operated primarily under any of the following conditions, replace the engine oil and oil filter at every 10,000 km or shorter.

a) Purpose of vehicle use is police car, taxi or driving school car.
b) Driving in dusty conditions
c) Extended periods of idling or low speed operation
d) Driving for long period in cold temperatures or driving regularly at short distance only
e) Driving in extremely hot conditions
f) Driving in mountainous conditions continually

*4 For SKYACTIV-D 1.5, reset the engine oil data after replacing the engine oil.
*5 If the vehicle is operated in very dusty or sandy areas, clean and if necessary, replace the air filter more often than the recommended intervals.
*6 Use of FL-22 is recommended when replacing engine coolant. Using engine coolant other than FL-22 may cause serious damage to the engine and cooling system.
*7 Inspect the battery electrolyte level, specific gravity and outer appearance. The sealed battery only requires an outer appearance inspection.
*8 If the brakes are used extensively (for example, continuous hard driving or mountain driving) or if the vehicle is operated in extremely humid climates, replace the brake fluid annually.
*9 The Tyre Pressure Monitoring System (TPMS) initialization must be performed so that the system operates normally (if equipped).
*10 Check the tyre repair fluid expiration date every year when performing the periodic maintenance. Replace the tyre repair fluid bottle with new one before the expiration date.

Russia/Belarus/Azerbaijan/Kazakhstan

Maintenance Interval		Number of months or kilometres, whichever comes first.											
	Months	12	24	36	48	60	72	84	96	108	120	132	144
	×1000 km	15	30	45	60	75	90	105	120	135	150	165	180
Drive belts*1		I	I	I	I	I	I	I	I	I	I	I	I
Engine oil	Russia/ Belarus/ Kazakhstan*2	R	R	R	R	R	R	R	R	R	R	R	R
	Azerbaijan*3	Replace every 5,000 km or 6 months.											
Engine oil filter	Russia/ Belarus/ Kazakhstan*2	R	R	R	R	R	R	R	R	R	R	R	R
	Azerbaijan*4	Replace every 10,000 km or 12 months.											
Cooling system			I		I		I		I		I		I
Engine coolant*5		Replace at first 195,000 km or 10 years; after that, every 90,000 km or 5 years.											
Air filter*6	Russia/ Belarus/ Kazakhstan	C	C	R	C	C	R	C	C	R	C	C	R
	Azerbaijan	C	R	C	R	C	R	C	R	C	R	C	R
Fuel filter	Russia/ Belarus/ Kazakhstan	Replace every 120,000 km.											
	Azerbaijan	Replace every 60,000 km.											
Fuel lines and hoses			I		I		I		I		I		I
Spark plugs		I	I	I	I	I	I	I	R	I	I	I	I
Evaporative system (if installed)					I				I				I
Battery*7		I	I	I	I	I	I	I	I	I	I	I	I
Brake lines, hoses and connections		I	I	I	I	I	I	I	I	I	I	I	I
Brake fluid*8			R		R		R		R		R		R
Parking brake		I	I	I	I	I	I	I	I	I	I	I	I
Disc brakes		I	I	I	I	I	I	I	I	I	I	I	I
Drum brakes		I	I	I	I	I	I	I	I	I	I	I	I
Steering operation and linkages		I	I	I	I	I	I	I	I	I	I	I	I
Manual transaxle oil						R					R		
Front and rear suspension, ball joints and wheel bearing axial play		I	I	I	I	I	I	I	I	I	I	I	I
Driveshaft dust boots		I	I	I	I	I	I	I	I	I	I	I	I
Exhaust system and heat shields		I	I	I	I	I	I	I	I	I	I	I	I
Bolts and nuts on chassis and body		T	T	T	T	T	T	T	T	T	T	T	T
Hinges and catches		L	L	L	L	L	L	L	L	L	L	L	L
All electrical system		I	I	I	I	I	I	I	I	I	I	I	I

Scheduled Maintenance

Maintenance Interval	Number of months or kilometres, whichever comes first.												
	Months	12	24	36	48	60	72	84	96	108	120	132	144
	×1000 km	15	30	45	60	75	90	105	120	135	150	165	180
Body condition (for rust, corrosion and perforation)	Inspect annually.												
Cabin air filter (if installed)		R		R		R		R		R		R
Tyres (including spare tyre) (with inflation pressure adjustment)*9*10	I	I	I	I	I	I	I	I	I	I	I	I
Emergency flat tyre repair kit (if installed)*11	Inspect annually.												

Chart symbols:

I: Inspect: Inspect and clean, repair, adjust, fill up, or replace if necessary.
R: Replace
C: Clean
T: Tighten
L: Lubricate
D: Drain

Remarks:

*1 Also inspect the air conditioner drive belts, if installed.
If the vehicle is operated primarily under any of the following conditions, inspect the drive belts at every 7,500 km or 6 months.

a) Driving in dusty conditions
b) Extended periods of idling or low speed operation
c) Driving for long period in cold temperatures or driving regularly at short distance only
d) Driving in extremely hot conditions
e) Driving in mountainous conditions continually

*2 If the vehicle is operated primarily under any of the following conditions, replace the engine oil and oil filter at every 7,500 km or 6 months.

a) Purpose of vehicle use is police car, taxi or driving school car.
b) Driving in dusty conditions
c) Extended periods of idling or low speed operation
d) Driving for long period in cold temperatures or driving regularly at short distance only
e) Driving in extremely hot conditions
f) Driving in mountainous conditions continually

*3 If the vehicle is operated primarily under any of the following conditions, replace the engine oil at every 2,500 km or 3 months.

a) Purpose of vehicle use is police car, taxi or driving school car.
b) Driving in dusty conditions
c) Extended periods of idling or low speed operation
d) Driving for long period in cold temperatures or driving regularly at short distance only
e) Driving in extremely hot conditions
f) Driving in mountainous conditions continually

*4 If the vehicle is operated primarily under any of the following conditions, replace the engine oil filter at every 5,000 km or 6 months.

a) Purpose of vehicle use is police car, taxi or driving school car.
b) Driving in dusty conditions
c) Extended periods of idling or low speed operation
d) Driving for long period in cold temperatures or driving regularly at short distance only
e) Driving in extremely hot conditions
f) Driving in mountainous conditions continually

*5 Use of FL-22 is recommended when replacing engine coolant. Using engine coolant other than FL-22 may cause serious damage to the engine and cooling system.
*6 If the vehicle is operated in very dusty or sandy areas, clean the air filter at every 7,500 km or 6 months.
*7 Inspect the battery electrolyte level, specific gravity and outer appearance. The sealed battery only requires an outer appearance inspection.
*8 If the brakes are used extensively (for example, continuous hard driving or mountain driving) or if the vehicle is operated in extremely humid climates, replace the brake fluid annually.
*9 Tyre rotation is recommended every 10,000 km.
*10 The Tyre Pressure Monitoring System (TPMS) initialization must be performed so that the system operates normally (if equipped).
*11 Check the tyre repair fluid expiration date every year when performing the periodic maintenance. Replace the tyre repair fluid bottle with new one before the expiration date.

Except Israel/Russia/Belarus/Azerbaijan/Kazakhstan

Maintenance Interval		Number of months or kilometres (miles), whichever comes first.															
	Months	6	12	18	24	30	36	42	48	54	60	66	72	78	84	90	96
	×1000 km	10	20	30	40	50	60	70	80	90	100	110	120	130	140	150	160
	×1000 miles	6.25	12.5	18.75	25	31.25	37.5	43.75	50	56.25	62.5	68.75	75	81.25	87.5	93.75	100
SKYACTIV-G 1.3 AND SKYACTIV-G 1.5																	
Fuel filter		Replace every 60,000 km (37,500 miles).															
Spark plugs*1		Replace every 120,000 km (75,000 miles).															
Evaporative system (if installed)			I		I		I		I		I		I		I		I
SKYACTIV-D 1.5																	
Fuel filter			D		R		D		R		D		R		D		R
Fuel injection system*2			I						I						I		
SKYACTIV-G 1.3, SKYACTIV-G 1.5, AND SKYACTIV-D 1.5																	
Drive belts*3		I	I	I	I	I	I	I	I	I	I	I	I	I	I	I	I
Engine oil*4*5	Except below countries	R	R	R	R	R	R	R	R	R	R	R	R	R	R	R	R
	Georgia/ Armenia/ Cambodia/ Gabon/ Ghana/ Cameroon/ Burundi/ Mozambique	Replace every 5,000 km (3,125 miles) or 6 months.															
	Tanzania	Replace every 3,000 km (1,875 miles) or 3 months.															
Engine oil filter*4	Except below countries	R	R	R	R	R	R	R	R	R	R	R	R	R	R	R	R
	Georgia/ Armenia/ Cambodia	Replace every 10,000 km (6,250 miles) or 1 year.															
	Gabon/ Ghana/ Cameroon/ Burundi/ Mozambique	Replace every 5,000 km (3,125 miles) or 6 months.															
	Tanzania	Replace every 3,000 km (1,875 miles) or 3 months.															
Cooling system			I		I		I		I		I		I		I		I
Engine coolant*6		Replace at first 200,000 km (125,000 miles) or 10 years; after that, every 100,000 km (62,500 miles) or 5 years.															

Scheduled Maintenance

Maintenance Interval		Number of months or kilometres (miles), whichever comes first.															
	Months	6	12	18	24	30	36	42	48	54	60	66	72	78	84	90	96
	×1000 km	10	20	30	40	50	60	70	80	90	100	110	120	130	140	150	160
	×1000 miles	6.25	12.5	18.75	25	31.25	37.5	43.75	50	56.25	62.5	68.75	75	81.25	87.5	93.75	100
Air filter*7	Except below countries		C		C		R		C		C		R		C		C
	Georgia/ Armenia		C		R		C		R		C		R		C		R
Fuel lines and hoses			I		I		I		I		I		I		I		I
Battery*8			I		I		I		I		I		I		I		I
Brake lines, hoses and connections			I		I		I		I		I		I		I		I
Brake fluid*9		I	I	I	R	I	I	I	R	I	I	I	R	I	I	I	R
Parking brake		I	I	I	I	I	I	I	I	I	I	I	I	I	I	I	I
Power brake unit (Brake booster) and hoses			I		I		I		I		I		I		I		I
Disc brakes		I	I	I	I	I	I	I	I	I	I	I	I	I	I	I	I
Drum brakes			I		I		I		I		I		I		I		I
Steering operation and linkages			I		I		I		I		I		I		I		I
Manual transaxle oil											R						
Front and rear suspension, ball joints and wheel bearing axial play			I		I		I		I		I		I		I		I
Driveshaft dust boots					I				I				I				I
Exhaust system and heat shields		Inspect every 80,000 km (50,000 miles).															
Bolts and nuts on chassis and body			T		T		T		T		T		T		T		T
Body condition (for rust, corrosion and perforation)		Inspect annually.															
Cabin air filter (if installed)			R		R		R		R		R		R		R		R
Tyres (including spare tyre) (with inflation pressure adjustment)*10		I	I	I	I	I	I	I	I	I	I	I	I	I	I	I	I
Tyre rotation*10		Rotate every 10,000 km (6,250 miles).															
Emergency flat tyre repair kit (if installed)*11		Inspect annually.															

Chart symbols:

I: Inspect: Inspect and clean, repair, adjust, fill up, or replace if necessary.
R: Replace
C: Clean
T: Tighten
L: Lubricate
D: Drain

Remarks:

*1 In the countries below, inspect the spark plugs at every 10,000 km (6,250 miles) or 12 months before replacing them at the said interval.
Armenia, Angola, Bolivia, Burundi, B.Virgin, Cambodia, Chile, Costa Rica, Curacao, El Salvador, Ghana, Georgia, Guatemala, Haiti, Honduras, Hong Kong, Iran, Jordan, Macau, Mozambique, Myanmar, Nigeria, Nicaragua, Papua New Guinea, Peru, Seychelles, Syria, Tanzania, Vietnam, Zaire

*2 Implement the fuel injection amount correction.

*3 Also inspect the air conditioner drive belts, if installed.
If the vehicle is operated primarily under any of the following conditions, inspect the drive belts more often than the recommended intervals.

a) Driving in dusty conditions
b) Extended periods of idling or low speed operation
c) Driving for long period in cold temperatures or driving regularly at short distance only
d) Driving in extremely hot conditions
e) Driving in mountainous conditions continually

*4 If the vehicle is operated primarily under any of the following conditions, replace the engine oil and oil filter more often than the recommended intervals.

a) Purpose of vehicle use is police car, taxi or driving school car.
b) Driving in dusty conditions
c) Extended periods of idling or low speed operation
d) Driving for long period in cold temperatures or driving regularly at short distance only
e) Driving in extremely hot conditions
f) Driving in mountainous conditions continually

*5 For SKYACTIV-D 1.5, reset the engine oil data after replacing the engine oil.

*6 Use of FL-22 is recommended when replacing engine coolant. Using engine coolant other than FL-22 may cause serious damage to the engine and cooling system.

*7 If the vehicle is operated in very dusty or sandy areas, clean and if necessary, replace the air filter more often than the recommended intervals.

*8 Inspect the battery electrolyte level, specific gravity and outer appearance. If the vehicle is operated in extremely hot and cold areas, inspect the battery electrolyte level, specific gravity and appearance every 10,000 km (6,250 miles) or 6 months. The sealed battery only requires an outer appearance inspection.

*9 If the brakes are used extensively (for example, continuous hard driving or mountain driving) or if the vehicle is operated in extremely humid climates, replace the brake fluid annually.

*10 The Tyre Pressure Monitoring System (TPMS) initialization must be performed so that the system operates normally (if equipped).

*11 Check the tyre repair fluid expiration date every year when performing the periodic maintenance. Replace the tyre repair fluid bottle with new one before the expiration date.

Maintenance Monitor

▼Maintenance Monitor (Type A/Type B audio)

“Oil Change” with flexible setting*1 is available. Consult an Authorised Mazda Repairer for details*2. When the engine oil flexible maintenance setting is selected, the wrench indicator light in the instrument cluster will be illuminated when remaining oil life becomes less than 500 km (300 mile), or remaining days are less than 15 (Whichever comes first).

Reset method

Press and hold the selector with the ignition switched off, then switch it on. Keep pressing the selector for more than 5 seconds. The master warning light will flash for a few seconds when the reset is completed.

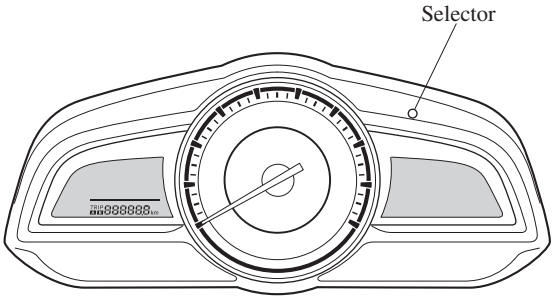

*1 The engine oil flexible maintenance setting is available (only some models). Based on the engine operating conditions, the onboard computer in your vehicle calculates the remaining oil life.
*2 When the engine oil flexible maintenance setting is selected, the system must be reset whenever replacing the engine oil regardless of the wrench indicator light display.

▼Maintenance Monitor (Type C/Type D audio)

1. Select the icon on the home screen to display the “Applications” screen.
2. Select “Maintenance” to display the maintenance list screen.
3. Switch the tab and select the setting item you want to change.

Scheduled Maintenance

You can customize settings in the setup display as follows:

Tab	Item	Explanation
Scheduled	Setting	Notification can be switched on/off.
	Time (months)	Displays the time or distance until maintenance is due. Select this item to set the maintenance period. “Scheduled Due!” is displayed in red and the wrench indicator light in the instrument cluster will be illuminated when the remaining distance is less than 500 km or 250 mile, or the remaining number of days is less than 15 (whichever comes first).
	Distance (mile or km)	
	Reset	Resets the time and distance to the initial values. Once the system turns on, it needs to be reset whenever carrying out maintenance.
Tyre Rotation	Setting	Notification can be switched on/off.
	Distance (mile or km)	Displays the distance until tyre rotation is due. Select this item to set the tyre rotation distance. “Tyre Rotation Due!” is displayed in red and the wrench indicator light in the instrument cluster will be illuminated when the remaining distance is less than 500 km or 250 mile.
	Reset	Resets the remaining distance to the initial value. Once the system turns on, it needs to be reset whenever rotating the tyres.
Oil Change	Setting*1	Notification can be switched on/off.
	Distance (mile or km)	Displays the distance until the oil replacement is due. Select this item to set the oil replacement distance. “Oil Change Due!” is displayed in red and the wrench indicator light in the instrument cluster will be illuminated when the remaining distance is less than 500 km or 250 mile.
	Reset*2	Resets the remaining distance to the initial value. Once the system turns on, it needs to be reset whenever replacing the engine oil.

*1 The engine oil flexible maintenance setting is available (only some models). Consult an Authorised Mazda Repairer for details.
When the engine oil flexible maintenance setting is selected, you will see the following items in the display. The vehicle calculates the remaining oil life based on the engine operating conditions and lets you know when an oil change is due by illuminating the wrench indicator light in the instrument cluster.

*2 Whenever the engine oil is replaced, the vehicle engine control unit reset is necessary for SKYACTIV-D 1.5. Your Authorised Mazda Repairer will be able to reset the engine control unit or refer to the vehicle engine control unit reset procedure on page 6-27.

Tab	Item	Explanation
Oil Change	Oil life (%)	Displays the engine oil life until the oil replacement is due. “Oil Change Due!” is displayed in red and the wrench indicator light in the instrument cluster will be illuminated when remaining oil life distance is less than 500 km (300 mile), or remaining days are less than 15 (whichever comes first).
	Reset	Resets the remaining oil life to 100 %. The system must be reset whenever replacing the engine oil.

Owner Maintenance Precautions

Routine Service

We highly recommend that these items be inspected daily, or at least every week.

- Engine Oil Level (page 6-28)
- Engine Coolant Level (page 6-29)
- Brake and clutch Fluid Level (page 6-31)
- Washer Fluid Level (page 6-32)
- Battery Maintenance (page 6-40)
- Tyre Inflation Pressure (page 6-44)

Improper or incomplete service may result in problems. This section gives instructions only for items that are easy to perform.

As explained in the Introduction (page 6-2), several procedures can be done only by a qualified service technician with special tools.

Improper do-it yourself maintenance during the warranty period may affect warranty coverage. For details, read the separate Mazda Warranty statement provided with the vehicle. If you are unsure about any servicing or maintenance procedure, have it done by an expert repairer, we recommend an Authorised Mazda Repairer.

There are strict environmental laws regarding the disposal of waste oil and fluids. Please dispose of your waste properly and with due regard to the environment.

We recommend that you entrust the oil and fluid changes of your vehicle to an Authorised Mazda Repairer.

⚠ *WARNING*

Do not perform maintenance work if you lack sufficient knowledge and experience or the proper tools and equipment to do the work. Have maintenance work done by a qualified technician:
Performing maintenance work on a vehicle is dangerous if not done properly. You can be seriously injured while performing some maintenance procedures.

If you must run the engine while working under the bonnet, make certain that you remove all jewellery (especially rings, bracelets, watches, and necklaces) and all neckties, scarves, and similar loose clothing before getting near the engine or cooling fan which may turn on unexpectedly:
Working under the bonnet with the engine running is dangerous. It becomes even more dangerous when you wear jewellery or loose clothing.
Either can become entangled in moving parts and result in injury.

Switch the ignition to off and make sure the fan is not running before attempting to work near the cooling fan:
Working near the cooling fan when it is running is dangerous. The fan could continue running indefinitely even if the engine has stopped and the engine compartment temperature is high. You could be hit by the fan and seriously injured.

Do not leave items in the engine compartment:
After you have finished checking or doing servicing in the engine compartment, do not forget and leave items such as tools or rags in the engine compartment.
Tools or other items left in the engine compartment could cause engine damage or a fire leading to an unexpected accident.

Bonnet

⚠ *WARNING*

Always check that the bonnet is closed and securely locked:
A bonnet that is not closed and securely locked is dangerous as it could fly open while the vehicle is moving and block the driver's vision which could result in a serious accident.

▼Opening the Bonnet

1. With the vehicle parked, pull the release handle to unlock the bonnet.

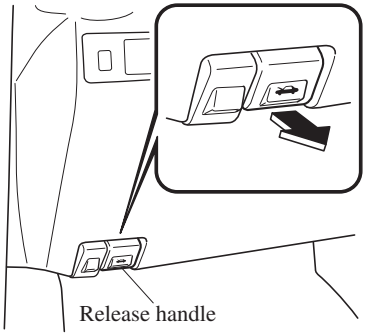

2. Insert your hand into the bonnet opening, slide the latch lever to the right, and lift up the bonnet.

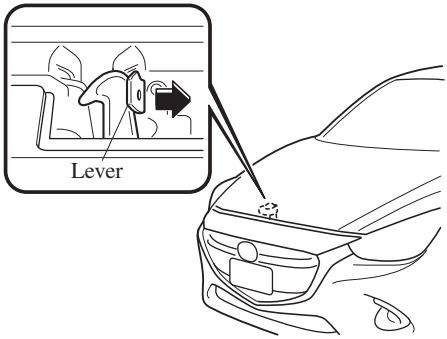

3. Grasp the support rod in the padded area and secure it in the support rod hole indicated by the arrow to hold the bonnet open.

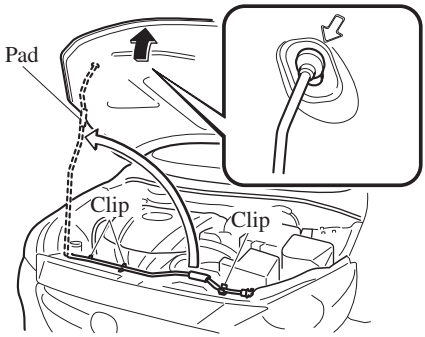

▼Closing the Bonnet

1. Check under the bonnet area to make certain all filler caps are in place and all loose items (e.g. tools, oil containers, etc.) have been removed.
2. Lift the bonnet, grasp the padded area on the support rod, and secure the support rod in the clip. Verify that the support rod is secured in the clip before closing the bonnet.

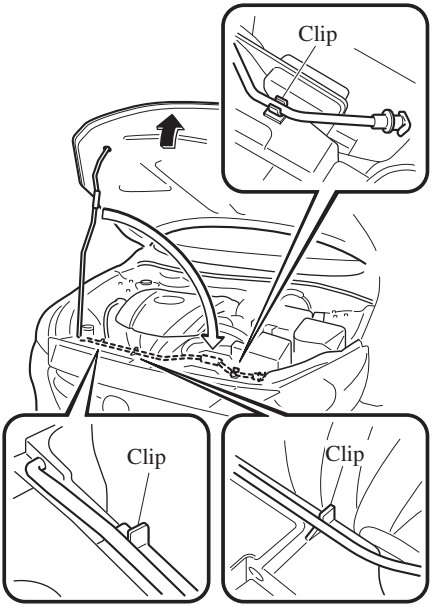

3. Lower the bonnet slowly to a height of about 20 cm (7.9 in) above its closed position and then let it drop.

⚠ CAUTION

When closing the bonnet, do not push it excessively such as by applying your weight. Otherwise, the bonnet could be deformed.

Engine Compartment Overview

SKYACTIV-G 1.3 and SKYACTIV-G 1.5

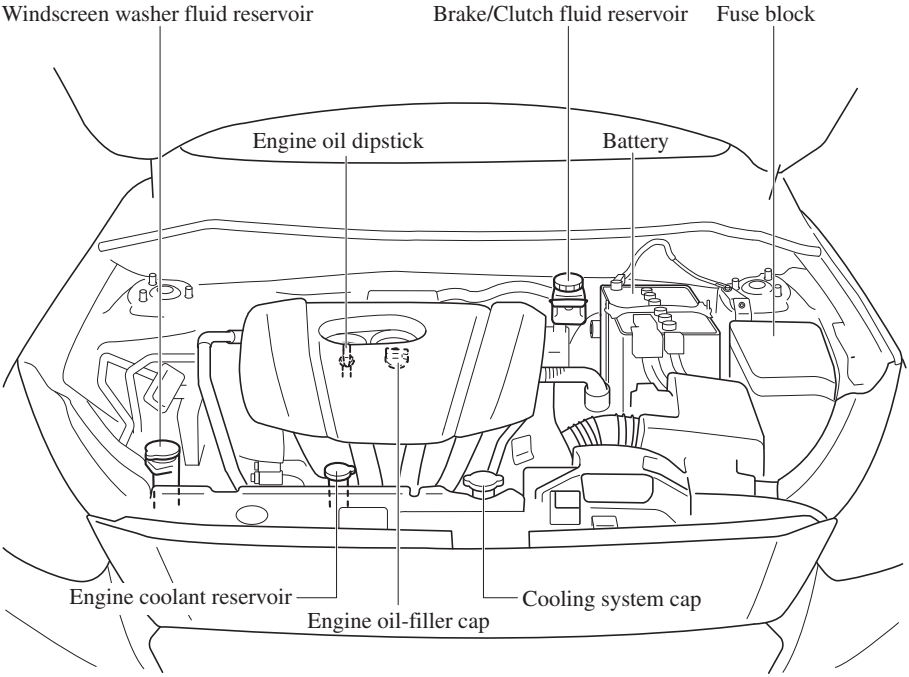

SKYACTIV-D 1.5

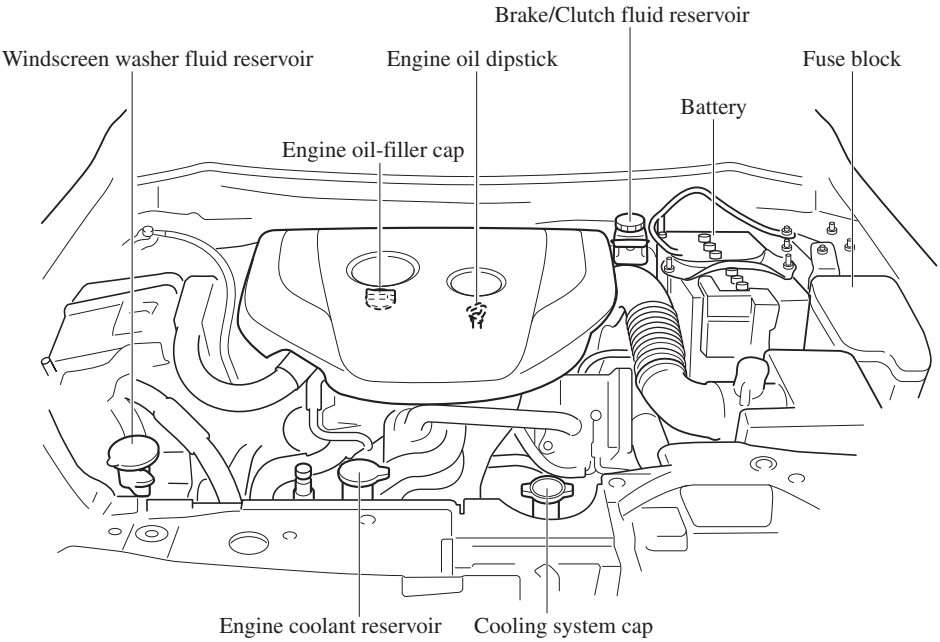

Engine Oil

NOTE
Changing the engine oil should be done by an expert repairer, we recommend an Authorised Mazda Repairer.

▼Recommended Oil

In order to keep the maintenance interval (page 6-3) and to protect the engine from damage caused by poor lubrication, it is vitally important to make use of engine oil with the correct specification. Do not use oils which do not meet the below specification or requirements. Use of unsuitable oil may lead to engine damage which is not covered by the Mazda Warranty.

Europe

(SKYACTIV-G 1.3 and SKYACTIV-G 1.5)

Temperature Range SAE Viscosity Numbers		
Grade		°C –40 –30 –20 –10 0 10 20 30 40 °F –40 –20 0 20 40 60 80 100
Recommended oils		
Mazda Original Oil Supra 0W-20		0W-20
Mazda Original Oil Ultra 5W-30		5W-30
Alternative Oil Quality		
API SL/SM/SN or ACEA A3/A5	0W-20	0W-20
	5W-30	5W-30

(SKYACTIV-D 1.5)

Temperature Range SAE Viscosity Numbers		
Grade		°C −40 −30 −20 −10 0 10 20 30 40 °F −40 −20 0 20 40 60 80 100
Recommended oils		
Mazda Original Oil Supra DPF 0W-30		0W-30
Mazda Original Oil Ultra DPF 5W-30		5W-30
Alternative Oil Quality		
ACEA C3	**0W-30**	0W-30
	5W-30	5W-30

Except Europe

(SKYACTIV-G 1.3 and SKYACTIV-G 1.5 LP[*1])

Temperature Range SAE Viscosity Numbers	
Grade	°C −40 −30 −20 −10 0 10 20 30 40 °F −40 −20 0 20 40 60 80 100
API SG/SH/SJ/SL/SM/SN[*2] or ILSAC GF-II/GF-III/GF-IV/GF-V	10W-30 5W-20 5W-30 0W-20 0W-30

*1 LP : Low-Power
*2 For African nations, use SL or higher engine oil with the SKYACTIV-G 1.3 and SKYACTIV-G 1.5 LP (Low-Power) engines.

(SKYACTIV-G 1.5 MP[*1] and SKYACTIV-G 1.5 HP[*2])

Temperature Range SAE Viscosity Numbers	
Grade	°C −40 −30 −20 −10 0 10 20 30 40 °F −40 −20 0 20 40 60 80 100
API SG/SH/SJ/SL/SM/SN or ILSAC GF-II/GF-III/GF-IV/GF-V	10W-30 10W-40 10W-50 5W-40 5W-20 5W-30 0W-20 0W-30

*1 MP : Medium-Power
*2 HP : High-Power

(SKYACTIV-D 1.5)

Temperature Range SAE Viscosity Numbers	
Grade	°C −40 −30 −20 −10 0 10 20 30 40 °F −40 −20 0 20 40 60 80 100
ACEA C3	5W-30 0W-30

Engine oil viscosity, or thickness, has an effect on fuel economy and cold-weather operation (starting and oil flow).
Low-viscosity engine oils can provide improved fuel economy and cold-weather performance.

When choosing an oil, consider the temperature range your vehicle will operate in before the next oil change.
Then select the recommended viscosity from the chart.

⚠ CAUTION

- Using oils of viscosity besides those recommended for specific temperature ranges could result in engine damage.
- **(SKYACTIV-D 1.5)**
  SKYACTIV-D 1.5 uses specified oil. Please confirm the specification in owner's manual. **If engine oil other than the specified oil is used, the Diesel Particulate Filter effective period of use will be shortened or the Diesel Particulate Filter may be damaged.**

NOTE

(SKYACTIV-G 1.3 and SKYACTIV-G 1.5)

- It is normal for all engines to consume engine oil under normal driving conditions. Engine oil consumption may be as high as 0.8 L/1,000 km (1 L/800 miles). This may be as a result of evaporation, internal ventilation or burning of the lubricating oil in the working engine. Oil consumption may be higher when the engine is new due to the running-in process. Oil consumption is also dependant on engine speed and engine load. Under extreme driving conditions, oil consumption may be higher.

(SKYACTIV-D 1.5)

- Whenever the engine oil is replaced, the vehicles engine control unit needs to be reset as soon as possible. Otherwise the wrench indicator light or engine oil warning light may turn on. To reset the engine control unit, consult an expert repairer, we recommend an Authorised Mazda Repairer or refer to the vehicle engine control unit reset procedure on page 6-27.
  Inspect the engine oil level periodically. When inspecting the engine oil, if the engine oil level is exceeds the “X” mark on the dipstick, replace the engine oil. This should be done by an expert repairer, we recommend an Authorised Mazda Repairer. When replacing the engine oil, inspect the oil level using the oil dipstick and refill so that the engine oil level is within the range between MIN and MAX as shown in the figure.

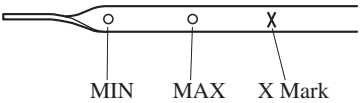

▼Vehicle Engine Control Unit Reset Procedure

NOTE

This procedure is intended for vehicles with SKYACTIV-D 1.5 and vehicles with SKYACTIV-G 1.3 or SKYACTIV-G 1.5 which the engine oil flexible maintenance setting is selected.

After replacing the engine oil, have a repair shop such as an Authorised Mazda Repairer perform the initialization (engine oil data resetting) of the recorded value. If the value recorded by the computer is not initialized, the wrench indicator light may not turn off or it may turn on earlier than normal.

NOTE

The initialization (engine oil data resetting) of the recorded value can be performed using the following procedure:

1. Switch the ignition OFF.
2. Switch the ignition ON with the selector pressed, and press and hold the selector for about 5 seconds until the master warning light ⚠/⚠ flashes.

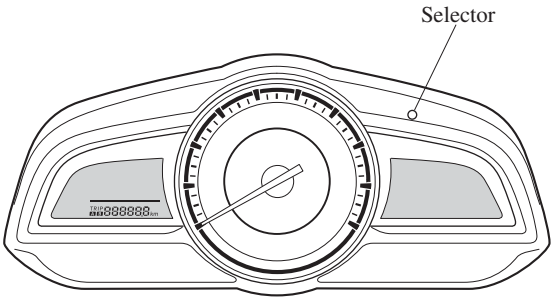

3. After the master warning light ⚠/⚠ flashes for several seconds, the initialization is completed.

▼Inspecting Engine Oil Level

1. Be sure the vehicle is on a level surface.
2. Warm up the engine to normal operating temperature.
3. Turn it off and wait at least 5 minutes for the oil to return to the sump.
4. Pull out the dipstick, wipe it clean, and reinsert it fully.
   SKYACTIV-G 1.3 and SKYACTIV-G 1.5

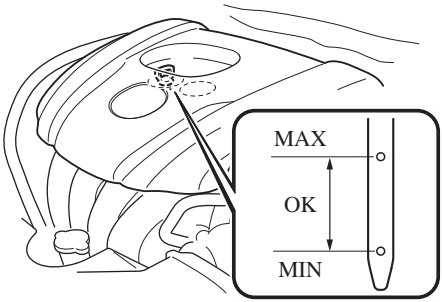

SKYACTIV-D 1.5

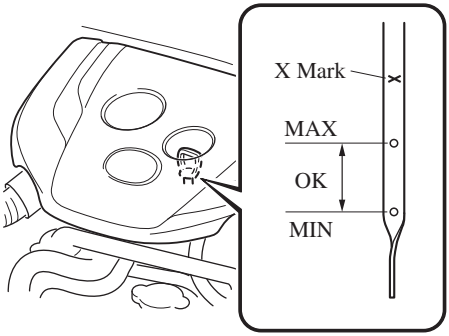

NOTE

(SKYACTIV-D 1.5)
When inspecting the engine oil level, pull out the dipstick straight without twisting. In addition, when inserting the dipstick, always insert it without twisting so that the “X” mark faces the front of the vehicle.

5. Pull it out again and examine the level.
   The level is normal if it is between the MIN and MAX marks.
   If it is near or below MIN, add enough oil to bring the level to MAX.

⚠ CAUTION

Do not overfill the engine oil. This may cause engine damage.

6. Make sure the O-ring on the dipstick is positioned properly before reinserting the dipstick.
7. Reinsert the dipstick fully.

Engine Coolant

▼Inspecting Coolant Level

⚠ *WARNING*

Do not use a match or live flame in the engine compartment. DO NOT ADD COOLANT WHEN THE ENGINE IS HOT:
A hot engine is dangerous. If the engine has been running, parts of the engine compartment can become very hot. You could be burned. Carefully inspect the engine coolant in the coolant reservoir, but do not open it.

Pull over to a safe location, then switch the ignition off and make sure the fan is not running before attempting to work near the cooling fan:
Working near the cooling fan when it is running is dangerous. The fan could continue running indefinitely even if the engine has stopped and the engine compartment temperature is high. You could be hit by the fan and seriously injured.

Do not remove either cooling system cap when the engine and radiator are hot:
When the engine and radiator are hot, scalding coolant and steam may shoot out under pressure and cause serious injury.

NOTE

Changing the coolant should be done by an expert repairer, we recommend an Authorised Mazda Repairer.

Inspect the antifreeze protection and coolant level in the coolant reservoir at least once a year—at the beginning of the winter season—and before travelling where temperatures may drop below freezing.

Inspect the condition and connections of all cooling system and heater hoses. Replace any that are swollen or deteriorated.

The coolant should be at full in the radiator and between the F or FULL and L marks on the coolant reservoir when the engine is cool.
SKYACTIV-G 1.3 and SKYACTIV-G 1.5

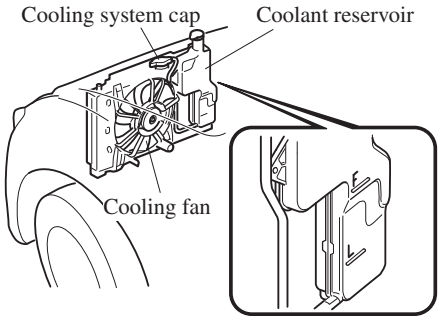

SKYACTIV-D 1.5

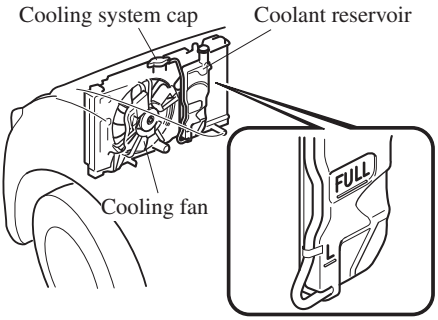

If it is at or near L, add enough coolant to the coolant reservoir to provide freezing and corrosion protection and to bring the level to F or FULL.
Securely tighten the coolant reservoir tank cap after adding coolant.

⚠ CAUTION

- Radiator coolant will damage paint. Rinse it off quickly if spilled.
- Use only soft (demineralised) water in the coolant mixture. Water that contains minerals will cut down on the coolant's effectiveness.
- Do not add only water. Always add a proper coolant mixture.
- The engine has aluminium parts and must be protected by an ethylene-glycol-based coolant to prevent corrosion and freezing.
- DO NOT USE coolants Containing Alcohol, methanol, Borate or Silicate.
  These coolants could damage the cooling system.
- DO NOT MIX alcohol or methanol with the coolant. This could damage the cooling system.

⚠ CAUTION

- Do not use a solution that contains more than 60% antifreeze.
  This would reduce effectiveness.
- If the “FL22” mark is shown on or near the cooling system cap, use of FL-22 is recommended when replacing engine coolant. Using engine coolant other than FL-22 may cause serious damage to the engine and cooling system.

If the coolant reservoir is empty or new coolant is required frequently, consult an expert repairer, we recommend an Authorised Mazda Repairer.

Brake/Clutch Fluid

▼Inspecting Brake/Clutch Fluid Level

⚠ *WARNING*

If the brake/clutch fluid level is low, have the brakes inspected:
A low brake/clutch fluid level is dangerous.
A low level could indicate brake lining wear or a brake system leak which could cause the brakes to fail and lead to an accident.

The brakes and clutch draw fluid from the same reservoir.
Inspect the fluid level in the reservoir regularly. It should be kept between the MAX and MIN lines.
The level normally drops with accumulated distance, a condition associated with wear of brake and clutch linings. If it is excessively low, have the brake/clutch system inspected by an expert repairer, we recommend an Authorised Mazda Repairer.

Left-hand drive model

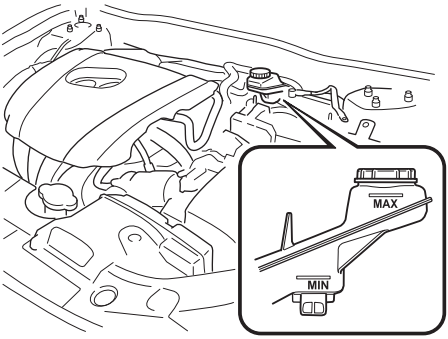

Right-hand drive model

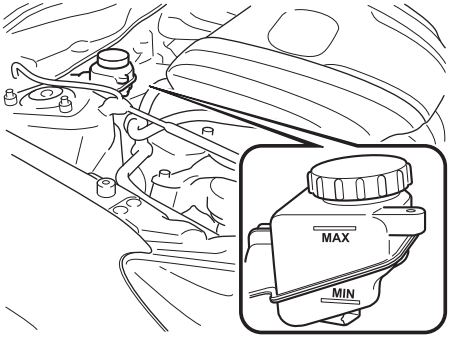

Window and Headlight Washer Fluid

▼Inspecting Washer Fluid Level

⚠ *WARNING*

Use only windscreen washer fluid or plain water in the reservoir:
Using radiator antifreeze as washer fluid is dangerous. If sprayed on the windscreen, it will dirty the windscreen, affect your visibility, and could result in an accident.

Inspect fluid level in the washer fluid reservoir; add fluid if necessary.

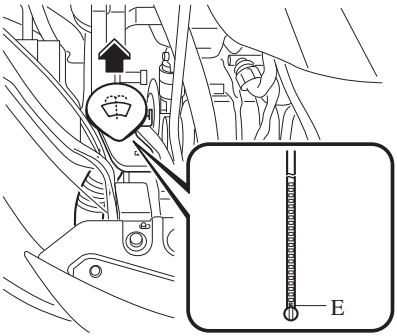

Use plain water if washer fluid is unavailable.
But use only washer fluid in cold weather to prevent it from freezing.

NOTE

Front and rear washer fluid is supplied from the same reservoir.

Body Lubrication

All moving points of the body, such as door and bonnet hinges and locks, should be lubricated each time the engine oil is changed. Use a nonfreezing lubricant on locks during cold weather.

Make sure the bonnet's secondary latch keeps the bonnet from opening when the primary latch is released.

Wiper Blades

⚠ CAUTION

- Hot waxes applied by automatic car washers have been known to affect the wiper's ability to clean windows.
- To prevent damage to the wiper blades, do not use petrol, paraffin, paint thinner, or other solvents on or near them.
- When the wiper lever is in the AUTO position and the ignition is switched ON, the wipers may move automatically in the following cases:
  - If the windscreen above the rain sensor is touched.
  - If the windscreen above the rain sensor is wiped with a cloth.
  - If the windscreen is struck with a hand or other object.
  - If the rain sensor is struck with a hand or other object from inside the vehicle.

  Be careful not to pinch hands or fingers as it may cause injury, or damage the wipers. When washing or servicing the vehicle, make sure the wiper lever is in the OFF position.

Contamination of either the windscreen or the blades with foreign matter can reduce wiper effectiveness. Common sources are insects, tree sap, and hot wax treatments used by some commercial car washes.

If the blades are not wiping properly, clean the window and blades with a good cleaner or mild detergent; then rinse thoroughly with clean water. Repeat if necessary.

▼Replacing Windscreen Wiper Blades

When the wipers no longer clean well, the blades are probably worn or cracked. Replace them.

⚠ CAUTION

To prevent damage to the wiper arms and other components, do not try to sweep the wiper arm by hand.

NOTE

When raising both windscreen wiper arms, raise the driver's side wiper arm first. When lowering the wiper arms, slowly lower the wiper arm from the passenger's side first while supporting it with your hand. Forcefully lowering the wiper arms could damage the wiper arm and blade, and may scratch or crack the windscreen.

(Type A)

1. Raise the wiper arm.
2. Open the clip and slide the blade assembly in the direction of the arrow.

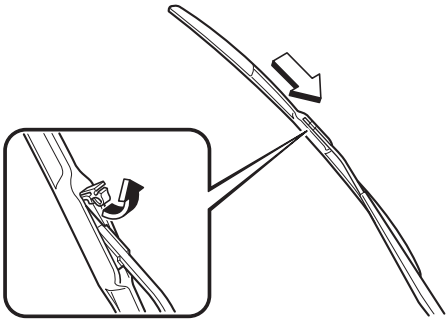

3. Tilt the blade assembly and remove it from the arm.

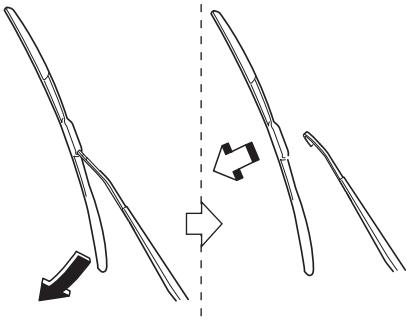

⚠ CAUTION

To prevent damage to the windscreen let the wiper arm down easily, do not let it slap down on the windscreen.

4. Pull down the blade rubber and slide it out of blade holder.

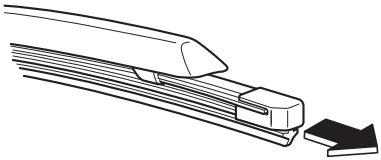

5. Remove the metal stiffeners from each blade rubber and install them in the new blade.

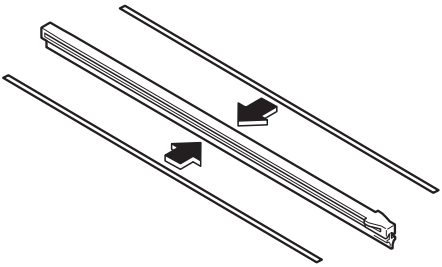

⚠ CAUTION

- Do not bend or discard the stiffeners. You need to use them again.
- If the metal stiffeners are switched, the blade's wiping efficiency could be reduced.
  So do not use the driver's side metal stiffeners on the passenger's side, or vice versa.
- Be sure to reinstall the metal stiffeners in the new blade rubber so that the curve is the same as it was in the old blade rubber.

6. Carefully insert the new blade rubber. Then install the blade assembly in the reverse order of removal.

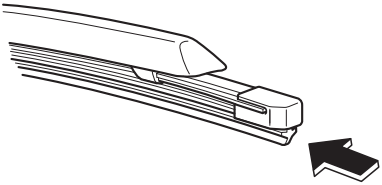

(Type B)

1. Raise the wiper arm and turn the blade assembly to expose the plastic locking clip.
   Compress the clip and slide the assembly downward; then lift it off the arm.

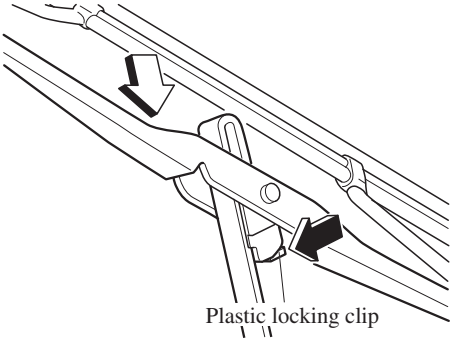

⚠ CAUTION

To prevent damage to the windscreen let the wiper arm down easily, don't let it slap down on the windscreen.

2. Hold the end of the rubber and pull until the tabs are free of the metal support.

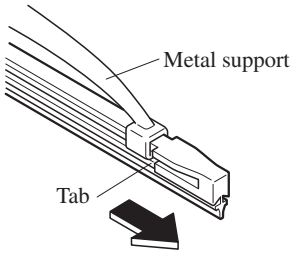

3. Remove the metal stiffeners from each blade rubber and install them in the new blade.

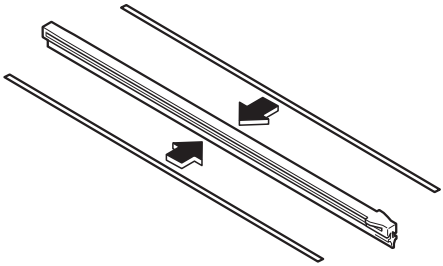

⚠ CAUTION

- Do not bend or discard the stiffeners. You need to use them again.
- If the metal stiffeners are switched, the blade's wiping efficiency could be reduced.
  So don't use the driver's side metal stiffeners on the passenger's side, or vice versa.
- Be sure to reinstall the metal stiffeners in the new blade rubber so that the curve is the same as it was in the old blade rubber.

4. Carefully insert the new blade rubber. Then install the blade assembly in the reverse order of removal.

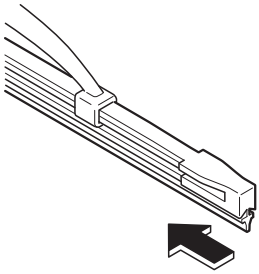

NOTE

Install the blade so that the tabs are toward the bottom of the wiper arm.

▼Replacing Rear Window Wiper Blade (Hatchback)

When the wiper no longer cleans well, the blade is probably worn or cracked. Replace it.

⚠ CAUTION

To prevent damage to the wiper arm and other components, do not move the wiper by hand.

1. Raise the wiper arm and rotate the wiper blade to the right until it unlocks, then remove the blade.

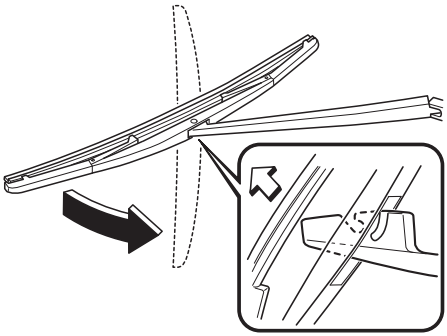

⚠ CAUTION

To prevent damage to the rear window, do not let the wiper arm fall on it.

2. Pull down the blade rubber and slide it out of the blade holder.

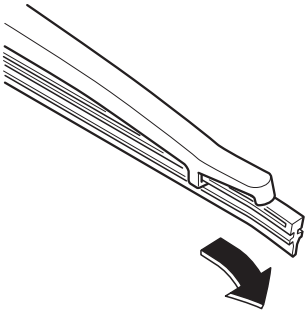

3. Remove the metal stiffeners from the blade rubber and install them in the new blade.

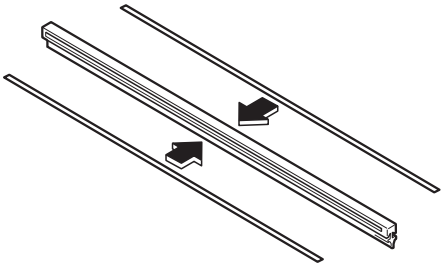

⚠ CAUTION

Do not bend or discard the stiffeners. You need to use them again.

4. Carefully insert the new blade rubber. Then install the blade assembly in the reverse order of removal.

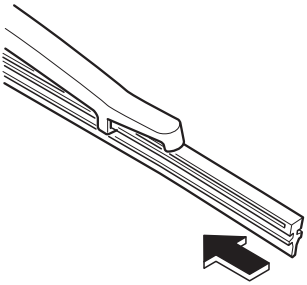

Battery

⚠ *WARNING*

Read the following precautions carefully before using the battery or inspecting to ensure safe and correct handling:

Always wear eye protection when working near the battery:
Working without eye protection is dangerous. Battery fluid contains SULPHURIC ACID which could cause blindness if splashed into your eyes. Also, hydrogen gas produced during normal battery operation, could ignite and cause the battery to explode.

Wear eye protection and protective gloves to prevent contact with battery fluid:
Spilled battery fluid is dangerous.
Battery fluid contains SULPHURIC ACID which could cause serious injuries if it gets in eyes, or on the skin or clothing. If this happens, immediately flush your eyes with water for 15 minutes or wash your skin thoroughly and get medical attention.

Always keep batteries out of the reach of children:
Allowing children to play near batteries is dangerous. Battery fluid could cause serious injuries if it gets in the eyes or on the skin.

Keep flames and sparks away from open battery cells and do not allow metal tools to contact the positive (+) or negative (−) terminal of the battery when working near a battery. Do not allow the positive (+) terminal to contact the vehicle body:
Flames and sparks near open battery cells are dangerous. Hydrogen gas, produced during normal battery operation, could ignite and cause the battery to explode. An exploding battery can cause serious burns and injuries. Keep all flames including cigarettes and sparks away from open battery cells.

⚠ *WARNING*

Keep all flames, including cigarettes, and sparks away from open battery cells:
Flames and sparks near open battery cells are dangerous. Hydrogen gas, produced during normal battery operation, could ignite and cause the battery to explode. An exploding battery can cause serious burns and injuries.

NOTE

Before performing battery maintenance, remove the battery cover.

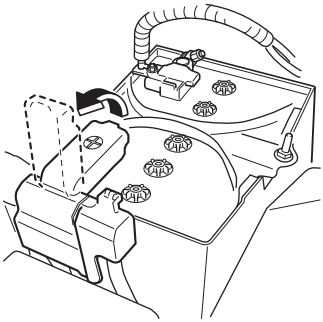

▼Battery Maintenance

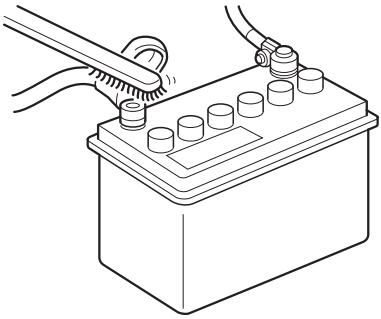

To get the best service from a battery:

- Keep it securely mounted.
- Keep the top clean and dry.
- Keep terminals and connections clean, tight, and coated with petroleum jelly or terminal grease.
- Rinse off spilled electrolyte immediately with a solution of water and baking soda.
- If the vehicle will not be used for an extended time, disconnect the battery leads and charge the battery every six weeks.

▼Inspecting Electrolyte Level*

A low level of electrolyte fluid will cause the battery to discharge quickly.

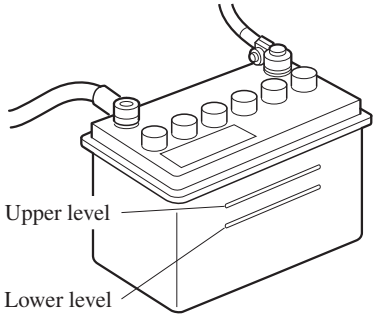

Inspect the electrolyte level at least once a week. If it is low, remove the caps and add enough distilled water to bring the level between the upper and lower level (illustration).

Do not overfill.
Examine the specific gravity of the electrolyte with a hydrometer, especially during cold weather. If it is low, recharge the battery.

▼Battery Recharging

NOTE

- Before performing maintenance or recharging the battery, turn off all accessories and stop the engine.
- To disconnect the battery, remove the negative lead first. Install it last when connecting the battery.
- Be sure to remove the caps before recharging the battery.
- **(With i-stop system)**
  Do not quick-charge the battery.

- If the battery quickly discharges because, for example, the lights were left on too long with the engine off, slow-charge it as required by battery size and charger capacity.
- If the battery gradually discharges because of high electric load while the vehicle is being used, recharge it as required by battery size and charger capacity.

▼Battery Replacement

Contact an Authorised Mazda Repairer for a battery replacement purchase.

*Some models.

Key Battery Replacement

If the buttons on the transmitter are inoperable and the operation indicator light does not flash, the battery may be dead.
Replace with a new battery before the transmitter becomes unusable.

⚠ CAUTION

- Make sure the battery is installed correctly. Battery leakage could occur if it is not installed correctly.
- When replacing the battery, be careful not to touch any of the internal circuitry and electrical terminals, bend the electrical terminals, or get dirt in the transmitter as the transmitter could be damaged.
- There is the danger of explosion if the battery is not correctly replaced.
- Dispose of used batteries according to the following instructions.
  - Insulate the plus and minus terminals of the battery using cellophane or equivalent tape.
  - Never disassemble.
  - Never throw the battery into fire or water.
  - Never deform or crush.
- Replace only with the same type battery (CR2025 or equivalent).

The following conditions indicate that the battery power is low:

- The KEY indicator light (green) flashes in the instrument cluster for about 30 seconds after the engine is turned off.
- The system does not operate and the operation indicator light on the transmitter does not flash when the buttons are pressed.
- The system's operational range is reduced.

Replacing the battery at an Authorised Mazda Repairer is recommended to prevent damage to the key. If replacing the battery by yourself, follow the instruction below.

Replacing the key battery

1. Press the knob and pull out the auxiliary key.

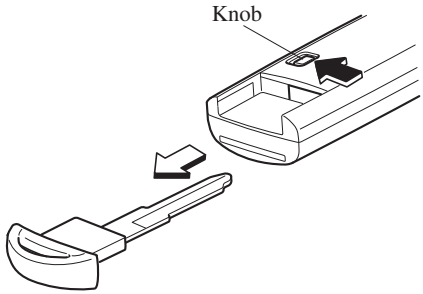

2. Twist a tape-wrapped flathead screwdriver in the direction of the arrow and open the cover slightly.

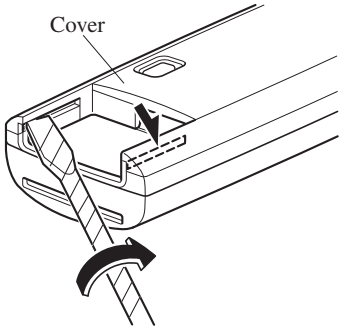

3. Insert the tape-wrapped flathead screwdriver into the gap and slide it in the direction of the arrow.

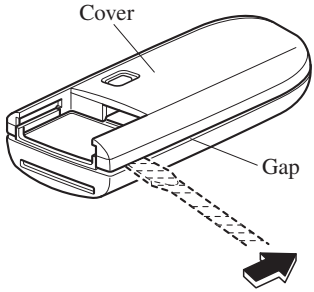

4. Twist the flathead screwdriver in the direction of the arrow and remove the cover.

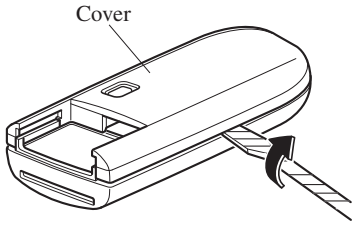

5. Remove the battery cap, then remove the battery.

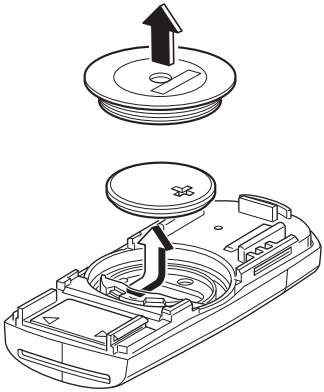

6. Insert a new battery with the positive pole facing up, and then cover the battery with the battery cap.

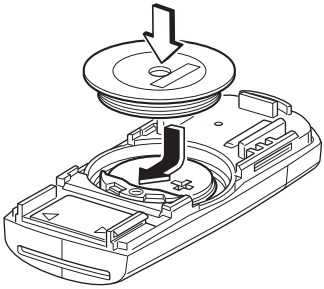

7. Close the cover.

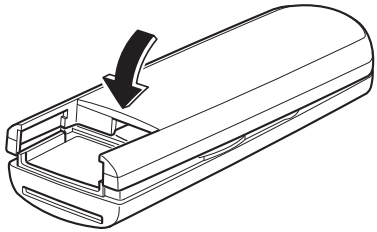

8. Reinsert the auxiliary key.

⚠ CAUTION

- Be careful not to allow the rubber ring shown in the figure to be scratched or damaged.
- If the rubber ring detaches, reattach it before inserting a new battery.

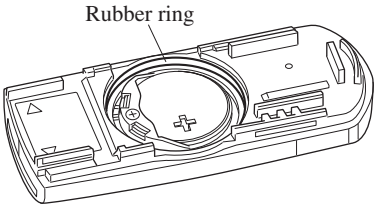

Tyres

For reasons of proper performance, safety, and better fuel economy, always maintain recommended tyre inflation pressures and stay within the recommended load limits and weight distribution.

⚠ *WARNING*

Using Different Tyre Types:
Driving your vehicle with different types of tyres is dangerous. It could cause poor handling and poor braking; leading to loss of control.
Except for the limited use of the temporary spare tyre, use only the same type tyres (radial, bias-belted, bias-type) on all four wheels.

Using Wrong-Sized Tyres:
Using any other tyre size than what is specified for the vehicle (page 9-10) is dangerous. It could seriously affect ride, handling, ground clearance, tyre clearance, and speedometer calibration. This could cause you to have an accident. Use only tyres that are the correct size specified for the vehicle.

▼Tyre Inflation Pressure

⚠ *WARNING*

Always inflate the tyres to the correct pressure:
Overinflation or underinflation of tyres is dangerous. Adverse handling or unexpected tyre failure could result in a serious accident.
Refer to Tyres on page 9-10.

Use only a Mazda-genuine tyre valve cap:
Use of a non-genuine part is dangerous as the correct tyre air pressure cannot be maintained if the tyre valve becomes damaged. If the vehicle is driven under this condition, the tyre air pressure will decrease which could result in a serious accident. Do not use any part for the tyre valve cap that is not a Mazda-genuine part.

Inspect all tyre pressures monthly (including the spare*) when the tyres are cold. Maintain recommended pressures for the best ride, handling, and minimum tyre wear.
Refer to the specification charts (page 9-10).
(With tyre pressure monitoring system)
After adjusting the tyre pressure, initialization of the tyre pressure monitoring system is necessary to make the system operate normally.
Refer to Tyre Pressure Monitoring System Initialization on page 4-146.

NOTE

- Always check tyre pressure when tyres are cold.
- Warm tyres normally exceed recommended pressures. Do not release air from warm tyres to adjust the pressure.
- Underinflation can cause reduced fuel economy, uneven and accelerated tyre wear, and poor sealing of the tyre bead, which will deform the wheel and cause separation of tyre from rim.
- Overinflation can produce a harsh ride, uneven and accelerated tyre wear, and a greater possibility of damage from road hazards.
  Keep your tyre pressure at the correct levels. If one frequently needs inflating, have it inspected.

*Some models.

▼Tyre Rotation

⚠ *WARNING*

Rotate tyres periodically:
Irregular tyre wear is dangerous. To equalize tread wear for maintaining good performance in handling and braking, rotate the tyres every 10,000 km (6,250 miles), or sooner if irregular wear develops.

During rotation, inspect them for correct balance.

NOTE

(Without temporary spare tyre)
Because your vehicle is not equipped with a spare tyre, you cannot do a tyre rotation safely with the jack that comes with your vehicle. Have an expert repairer, we recommend an Authorised Mazda Repairer perform tyre rotation.

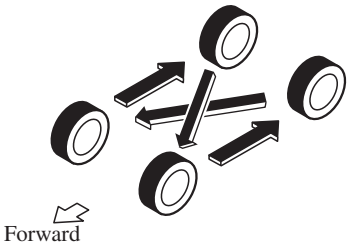

Do not include (TEMPORARY USE ONLY) spare tyre in rotation.

Also, inspect them for uneven wear and damage. Abnormal wear is usually caused by one or a combination of the following:

- Incorrect tyre pressure
- Improper wheel alignment
- Out-of-balance wheel
- Severe braking

After rotation, inflate all tyre pressures to specification (page 9-10) and inspect the wheel nuts for tightness.
(With tyre pressure monitoring system)
After adjusting the tyre pressure, initialization of the tyre pressure monitoring system is necessary to make the system operate normally.
Refer to Tyre Pressure Monitoring System Initialization on page 4-146.

⚠ CAUTION

Rotate unidirectional tyres and radial tyres that have an asymmetrical tread pattern or studs only from front to rear, not from side to side. Tyre performance will be reduced if rotated from side to side.

▼Replacing a Tyre

⚠ *WARNING*

Always use tyres that are in good condition:
Driving with worn tyres is dangerous. Reduced braking, steering, and traction could result in an accident.

Replace all four tyres at the same time:
Replacing just one tyre is dangerous. It could cause poor handling and poor braking resulting in loss of vehicle control. Mazda strongly recommends that you replace all four tyres at the same time.

If a tyre wears evenly, a wear indicator will appear as a solid band across the tread.
Replace the tyre when this happens.

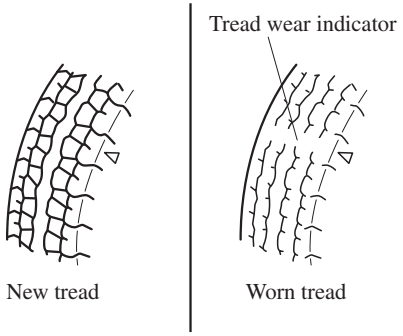

You should replace the tyre before the band crosses the entire tread.
(With tyre pressure monitoring system)
After adjusting the tyre pressure, initialization of the tyre pressure monitoring system is necessary to make the system operate normally.
Refer to Tyre Pressure Monitoring System Initialization on page 4-146.

▼Temporary Spare Tyre*

Inspect the temporary spare tyre at least monthly to make sure it is properly inflated and stored.

NOTE

The temporary spare tyre condition gradually deteriorates even if it has not been used.

The temporary spare tyre is easier to handle because of its construction which is lighter and smaller than a conventional tyre. This tyre should be used only for an emergency and only for a short distance.

Use the temporary spare tyre only until the conventional tyre is repaired, which should be as soon as possible.

Refer to Tyre on page 9-10.

⚠ CAUTION

- Do not use your temporary spare tyre rim with a snow tyre or a conventional tyre. Neither will properly fit and could damage both tyre and rim.
- The temporary spare tyre has a tread life of less than 5,000 km (3,000 miles). The tread life may be shorter depending on driving conditions.
- The temporary spare tyre is for limited use, however, if the tread wear solid-band indicator appears, replace the tyre with the same type of temporary spare (page 6-46).

*Some models.

▼Replacing a Wheel

⚠ *WARNING*

Always use wheels of the correct size on your vehicle:
Using a wrong-sized wheel is dangerous. Braking and handling could be affected, leading to loss of control and an accident.

⚠ CAUTION

A wrong-sized wheel may adversely affect:

- Tyre fit
- Wheel and bearing life
- Ground clearance
- Snow-chain clearance
- Speedometer calibration
- Headlight aim
- Bumper height
- Tyre Pressure Monitoring System*

NOTE

- When replacing a wheel, make sure the new one is the same as the original factory wheel in diameter, rim width, and offset (inset/outset).
- For details, contact an expert repairer, we recommend an Authorised Mazda Repairer.

Proper tyre balancing provides the best riding comfort and helps reduce tread wear. Out-of-balance tyres can cause vibration and uneven wear, such as cupping and flat spots.

*Some models.

Light Bulbs

With LED Headlights

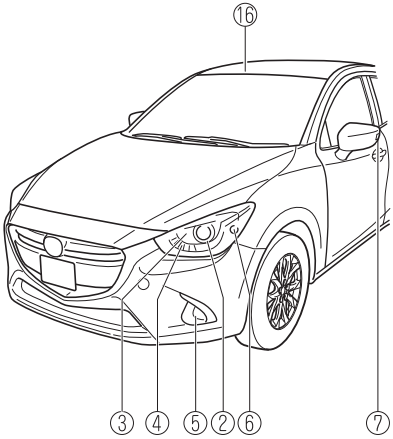

With Halogen Headlights

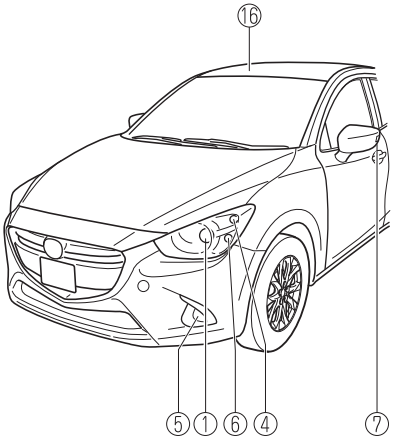

Saloon

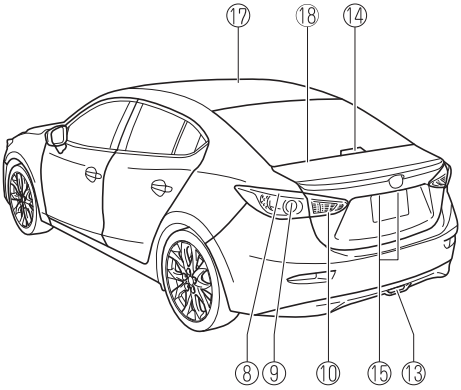

Hatchback

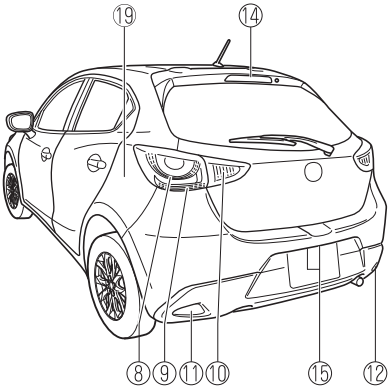

① Headlights (Low/High beam)

② Headlights (Low beam)

③ Headlights (High beam)

④ Running lights*/Position lights

⑤ Front fog lights*

⑥ Front direction indicator lights

⑦ Side direction indicator lights

⑧ Brake lights/Tail lights

⑨ Rear direction indicator lights

⑩ Reverse lights

⑪ Rear fog light (Left-hand drive model)*

⑫ Rear fog light (Right-hand drive model)*

⑬ Rear fog light*

⑭ High-mount brake light

⑮ Number plate lights

⑯ Overhead lights (Front)/Map lights*

⑰ Overhead lights (Rear)*

⑱ Boot light (Saloon)

⑲ Luggage compartment light (Hatchback)

*Some models.

⚠ *WARNING*

Never touch the glass portion of a halogen bulb with your bare hands and always wear eye protection when handling or working around the bulbs:
When a halogen bulb breaks, it is dangerous. These bulbs contain pressurised gas. If one is broken, it will explode and serious injuries could be caused by the flying glass.
If the glass portion is touched with bare hands, body oil could cause the bulb to overheat and explode when lit.

Always keep halogen bulbs out of the reach of children:
Playing with a halogen bulb is dangerous. Serious injuries could be caused by dropping a halogen bulb or breaking it some other way.

⚠ CAUTION

When removing the lens or lamp unit using a flathead screwdriver, make sure that the flathead screwdriver does not contact the interior terminal. If the flathead screwdriver contacts the terminal, a short circuit may occur.

NOTE

- To replace the bulb, contact an expert repairer, we recommend an Authorised Mazda Repairer.
- If the halogen bulb is accidentally touched, it should be cleaned with rubbing alcohol before being used.
- Use the protective cover and carton for the replacement bulb to dispose of the old bulb promptly and out of the reach of children.

▼Replacing Exterior Light Bulbs

Headlights (With LED headlights)

The LED bulb cannot be replaced as a single unit because it is an integrated unit. The LED bulb has to be replaced with the unit. We recommend an Authorised Mazda Repairer when the replacement is necessary.

Headlights (With halogen headlights)

1. If you are changing the right bulb, start the engine, turn the steering wheel all the way to the left, and turn off engine. If you are changing the left bulb, turn the steering wheel to the right, and turn off engine.
2. Make sure the headlight switch is off.

3. Pull the centre of each plastic retainer and remove the retainers.

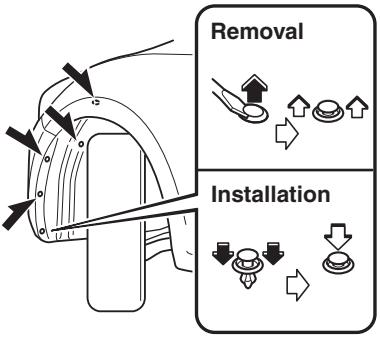

4. Turn the screw anticlockwise and remove it, and then partially peel back the mudguard.

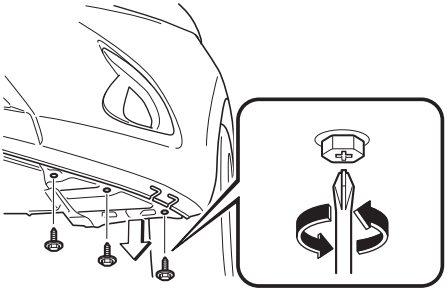

5. Disconnect the connector from the bulb.

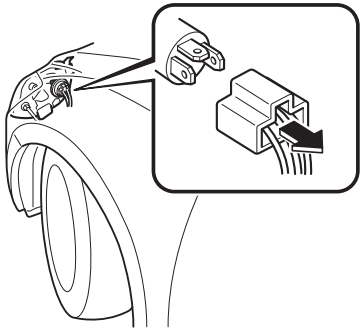

6. Detach the sealing cover from the bulb.

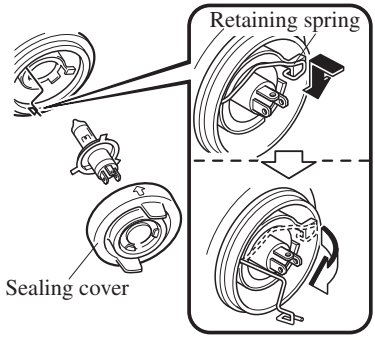

7. Unhook the bulb retaining spring.
8. Swing the retaining spring out and away to free the headlight bulb.
9. Carefully remove the headlight bulb from the socket by pulling it straight back.
10. Replace the bulb.
11. Install the new bulb in the reverse order of the removal procedure.

NOTE

- To replace the bulb, contact an expert repairer, we recommend an Authorised Mazda Repairer.
- If the halogen bulb is accidentally touched, it should be cleaned with rubbing alcohol before being used.
- Use the protective cover and carton of the replacement bulb to dispose of the old bulb promptly out of the reach of children.
- When reinstalling the sealing cover, make sure it is fitted correctly.

Running lights/Position lights (With LED headlights)

The LED bulb cannot be replaced as a single unit because it is an integrated unit. The LED bulb has to be replaced with the unit. We recommend an Authorised Mazda Repairer when the replacement is necessary.

Front direction indicator lights, Running lights*/Position lights (With halogen headlights)

1. If you are changing the right bulb, start the engine, turn the steering wheel all the way to the left, and turn off engine. If you are changing the left bulb, turn the steering wheel to the right, and turn off engine.
2. Make sure the headlight switch is off.
3. Pull the centre of each plastic retainer and remove the retainers.

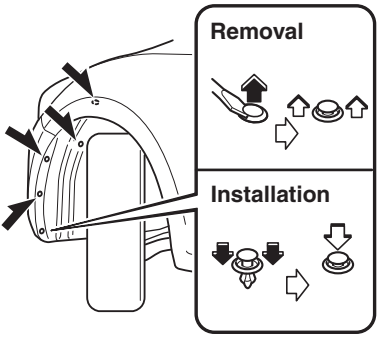

4. Turn the screw anticlockwise and remove it, and then partially peel back the mudguard.

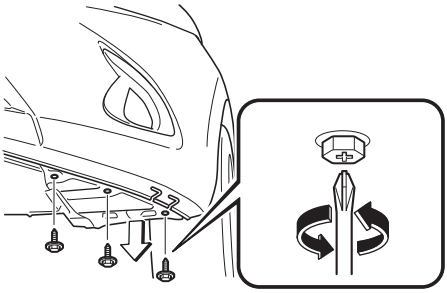

5. Turn the socket and bulb assembly anticlockwise and remove it.
6. Disconnect the bulb from the socket.
   Front direction indicator lights

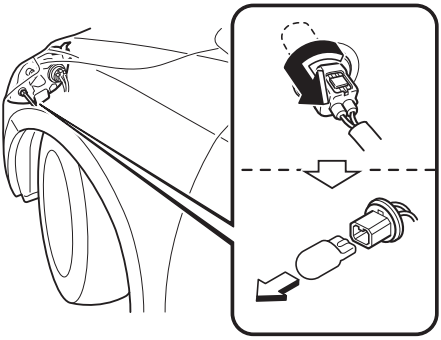

*Some models.

Running lights/Position lights (With halogen headlights)*

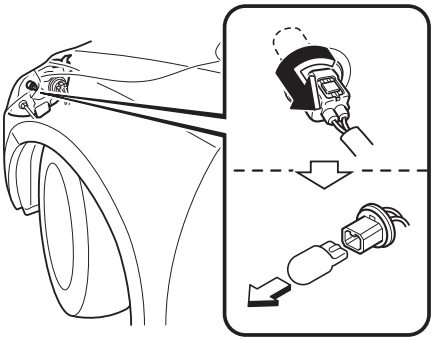

Position lights (With halogen headlights)*

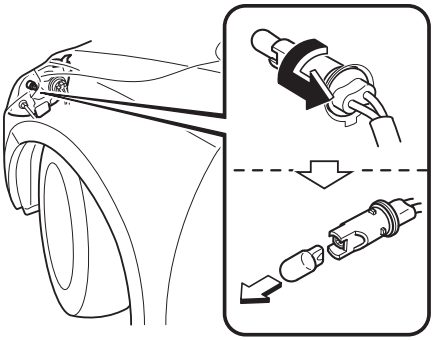

7. Install the new bulb in the reverse order of the removal procedure.

Front fog lights*

1. Make sure the ignition is switched off, and the fog light switch is off.
2. Turn the screw anticlockwise and remove it, and then partially peel back the mudguard.

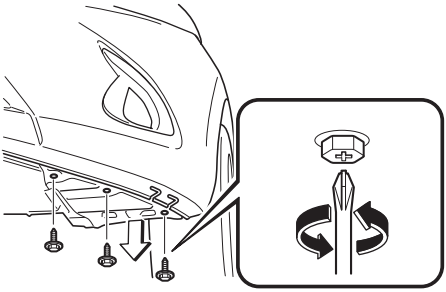

3. Disconnect the connector from the unit by pressing the tab on the connector with your finger and pulling the connector downward.

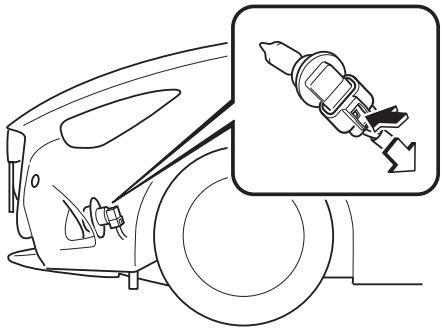

*Some models.

4. Turn the socket and bulb assembly to remove it. Carefully remove the bulb from its socket in the reflector by gently pulling it straight backward out of the socket.

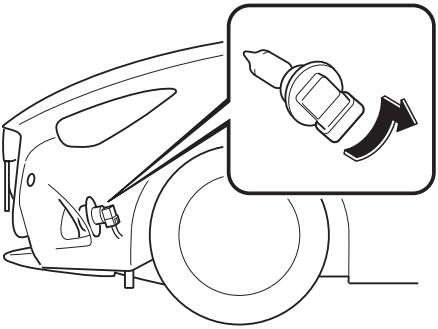

5. Install the new bulb in the reverse order of the removal procedure.

Side direction indicator lights, High-mount brake light

The LED bulb cannot be replaced as a single unit because it is an integrated unit. The LED bulb has to be replaced with the unit. We recommend an Authorised Mazda Repairer when the replacement is necessary.

Rear direction indicator lights, Brake lights/Tail lights

Saloon

1. Make sure the ignition is switched off, and the headlight switch is off.
2. Remove the cover.

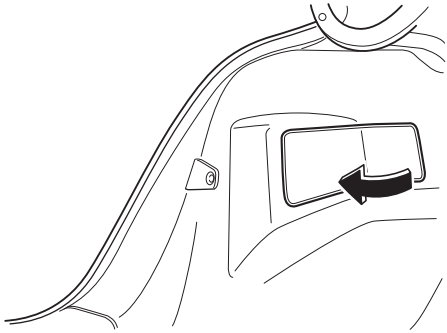

3. Turn the socket and bulb assembly anticlockwise and remove it.
4. Disconnect the bulb from the socket.
   Rear direction indicator lights

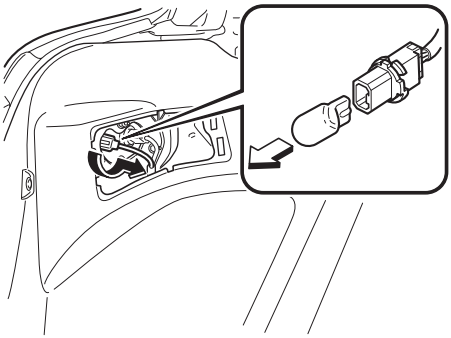

Brake lights/Tail lights

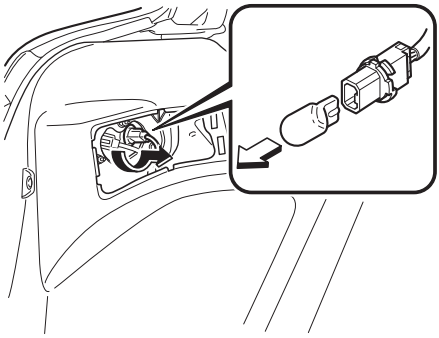

5. Install the new bulb in the reverse order of the removal procedure.
6. Insert the cover tabs and install the cover.

NOTE
Verify that the cover is securely installed.

Hatchback

1. Make sure the ignition is switched off, and the headlight switch is off.
2. Turn the bolts anticlockwise and remove them.

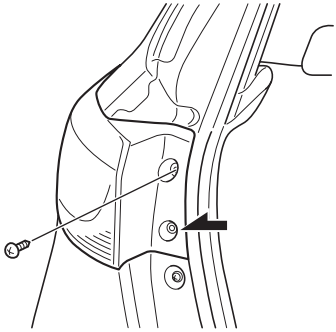

3. Pull the unit rearward to remove it.

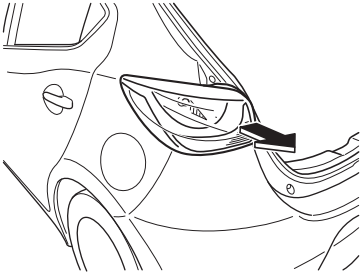

4. Turn the socket and bulb assembly anticlockwise and remove it.
5. Disconnect the bulb from the socket.

Rear direction indicator lights

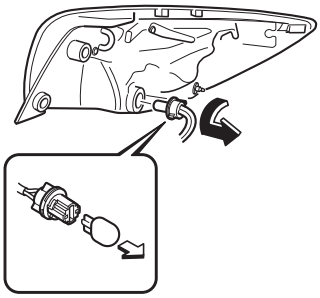

Brake lights/Tail lights
(LED type)
The LED bulb cannot be replaced as a single unit because it is an integrated unit.
The LED bulb has to be replaced with the unit. We recommend an Authorised Mazda Repairer when the replacement is necessary.
(Bulb type)

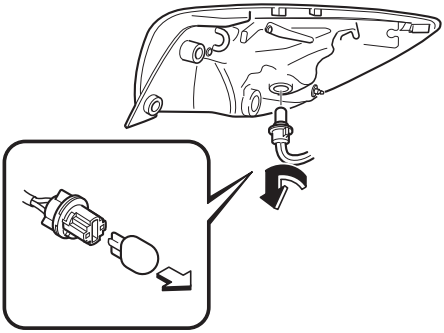

6. Install the new bulb in the reverse order of the removal procedure.

Reverse lights

Saloon

1. Make sure the ignition is switched off, and the headlight switch is off.
2. Pull the centre of each plastic retainer and remove the retainers.
3. Peel back the boot lid trim.

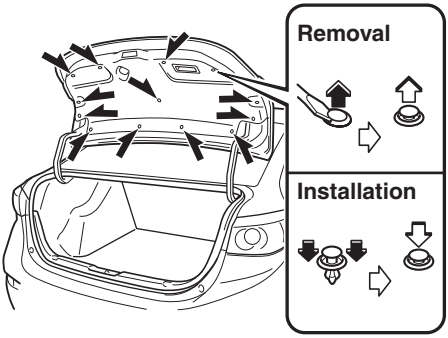

4. Disconnect the electrical connector from the bulb by pressing the tab on the connector with your finger and pulling the connector.

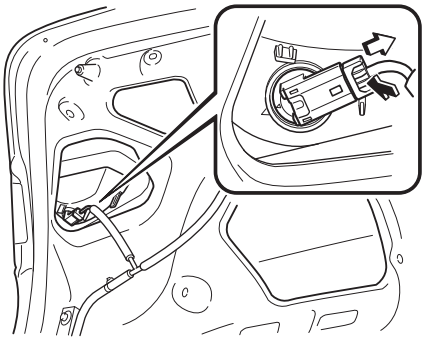

5. Turn the socket and bulb assembly anticlockwise and remove it.

6. Disconnect the bulb from the socket.

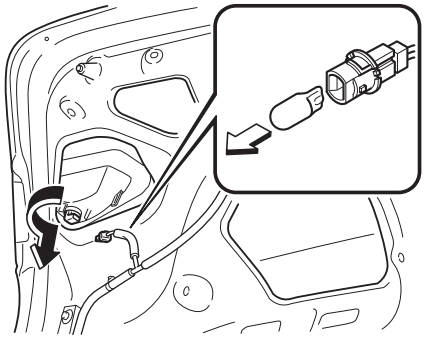

7. Install the new bulb in the reverse order of the removal procedure.

Hatchback

1. Make sure the ignition is switched off, and the headlight switch is off.
2. Pull the centre of each plastic retainer and remove the retainers.
3. Remove the cover on the interior surface of the liftgate.

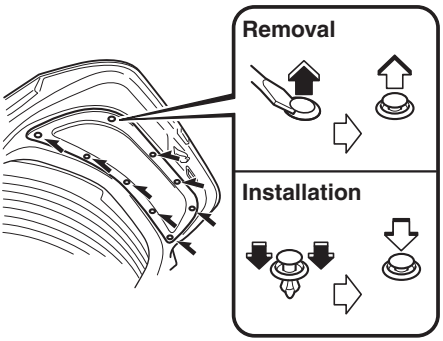

4. Disconnect the connector from the socket.

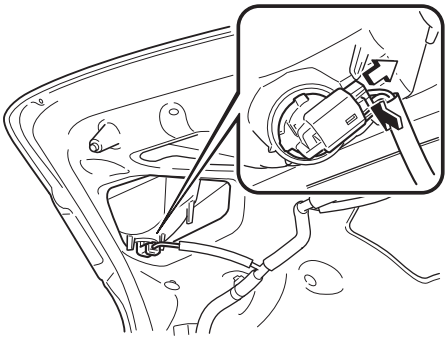

5. Turn the socket and bulb assembly anticlockwise and remove it.
6. Disconnect the bulb from the socket.

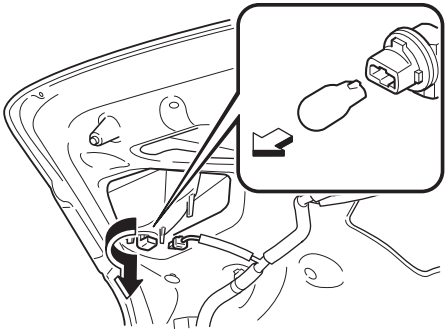

7. Install the new bulb in the reverse order of the removal procedure.

Rear fog light*

Saloon

1. Make sure the ignition is switched off, and the headlight switch is off.
2. Turn the socket and bulb assembly anticlockwise and remove it.
3. Disconnect the bulb from the socket.

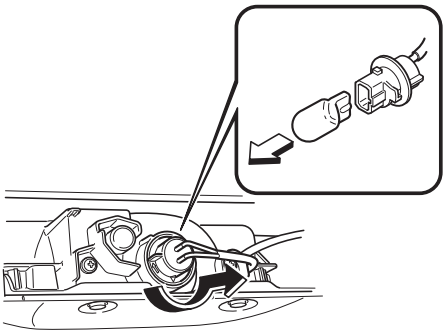

4. Install the new bulb in the reverse order of the removal procedure.

Hatchback

1. Make sure the ignition is switched off and the headlight switch is off.
2. Turn the screw anticlockwise and remove it, and then partially peel back the mudguard.

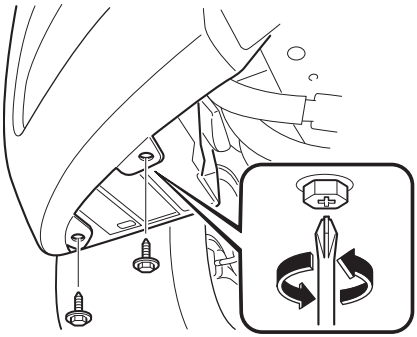

3. Turn the socket and bulb assembly anticlockwise and remove it.
4. Disconnect the bulb from the socket.

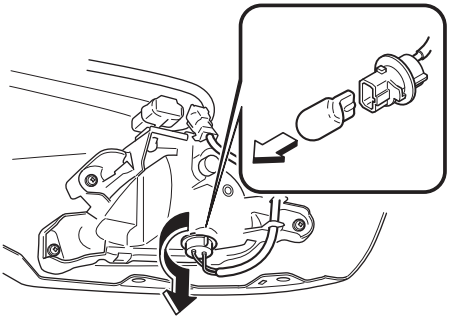

5. Install the new bulb in the reverse order of the removal procedure.

Number plate lights

Saloon

1. Make sure the ignition is switched off, and the headlight switch is off.
2. Pull the centre of each plastic retainer and remove the retainers.
3. Peel back the boot lid trim.

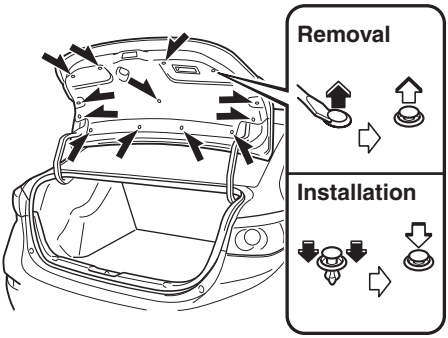

4. Turn the socket and bulb assembly anticlockwise and remove it.

*Some models.

5. Disconnect the bulb from the socket.

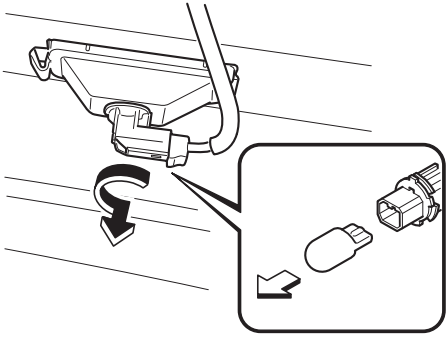

6. Install the new bulb in the reverse order of the removal procedure.

Hatchback

1. Make sure the ignition is switched off, and the headlight switch is off.
2. Wrap a flathead screwdriver with a soft cloth to prevent damage to the light unit.
3. Insert a flathead screwdriver into the position shown in the figure and pull the light unit outward.

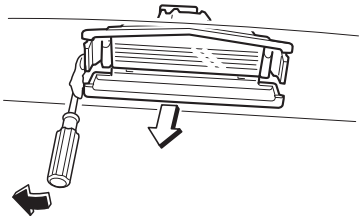

4. Disconnect the electrical connector from the bulb by pressing the tab on the connector with your finger and pulling the connector.

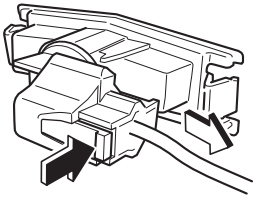

5. Turn the socket and bulb assembly anticlockwise and remove it.
6. Disconnect the bulb from the socket.

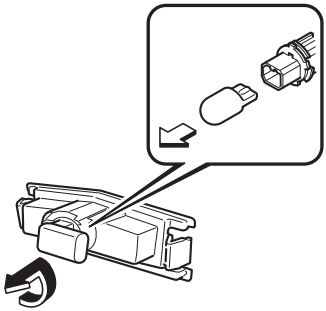

7. Install the new bulb in the reverse order of the removal procedure.

▼Replacing Interior Light Bulbs

Overhead lights/Map lights*, Overhead lights (Front)*, Overhead lights (Rear)*

1. Wrap a small flathead screwdriver with a soft cloth to prevent damage to the lens, and then remove the lens by carefully prying on the edge of the lens with the flathead screwdriver.
2. Disconnect the bulb by pulling it out.
   Overhead lights/Map lights*

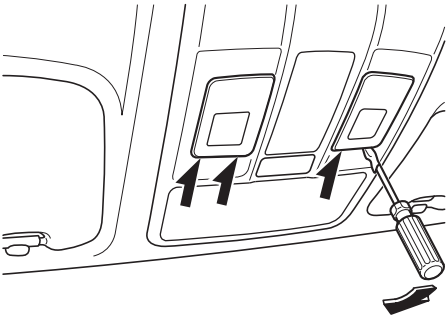

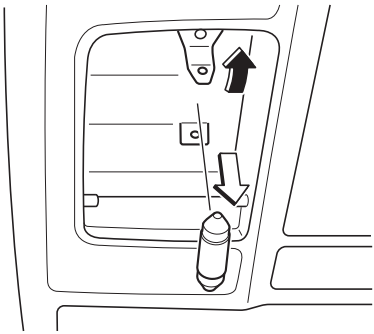

Overhead lights (Front)*

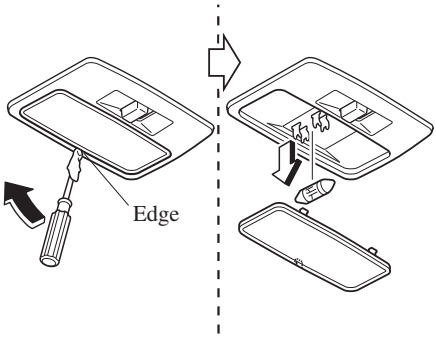

Overhead lights (Rear)*

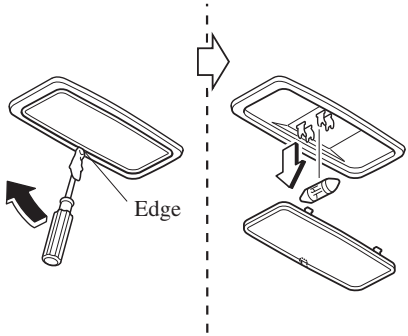

3. Install the new bulb in the reverse order of the removal procedure.

 *Some models.

Boot light (Saloon)

1. Press both sides of the lens cap to remove it.
2. Disconnect the bulb by pulling it out.

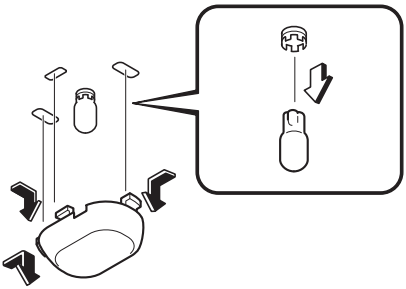

3. Install the new bulb in the reverse order of the removal procedure.

Luggage compartment light (Hatchback)

1. Wrap a small flathead screwdriver with a soft cloth to prevent damage to the lens and remove the lens by carefully prying on the edge of the lens with the flathead screwdriver.
2. Disconnect the bulb by pulling it out.

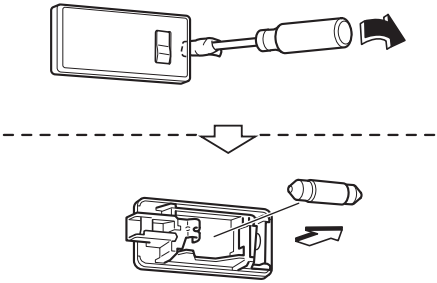

3. Install the new bulb in the reverse order of the removal procedure.

Fuses

Your vehicle's electrical system is protected by fuses.

If any lights, accessories, or controls do not work, inspect the appropriate circuit protector. If a fuse has blown, the inside element will be melted.

If the same fuse blows again, avoid using that system and consult an expert repairer, we recommend an Authorised Mazda Repairer as soon as possible.

▼Fuse Replacement

Replacing the fuses on the vehicle's left side

If the electrical system does not work, first inspect the fuses on the vehicle's left side.

1. Make sure the ignition is switched off, and other switches are off.
2. Open the fuse panel cover.

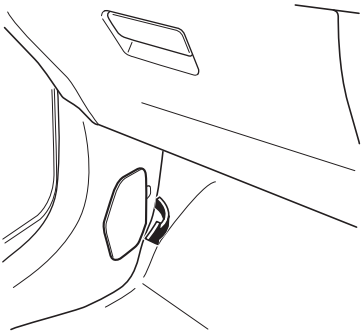

3. Pull the fuse straight out with the fuse puller provided on the fuse block located in the engine compartment.

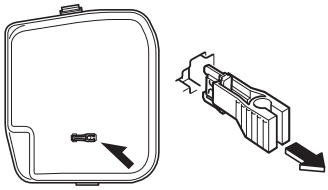

4. Inspect the fuse and replace it if it is blown.

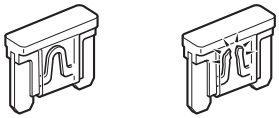

Normal Blown

5. Insert a new fuse of the same amperage rating, and make sure it fits tightly. If it does not fit tightly, have an expert install it. We recommend an Authorised Mazda Repairer.
   If you have no spare fuses, borrow one of the same rating from a circuit not essential to vehicle operation, such as the AUDIO or OUTLET circuit.

⚠ CAUTION

Always replace a fuse with a genuine Mazda fuse or equivalent of the same rating. Otherwise you may damage the electric system.

6. Reinstall the cover and make sure that it is securely installed.

Replacing the fuses under the bonnet

If the headlights or other electrical components do not work and the fuses in the cabin are normal, inspect the fuse block under the bonnet. If a fuse is blown, it must be replaced. Follow these steps:

1. Make sure the ignition is switched off, and other switches are off.
2. Remove the fuse block cover.

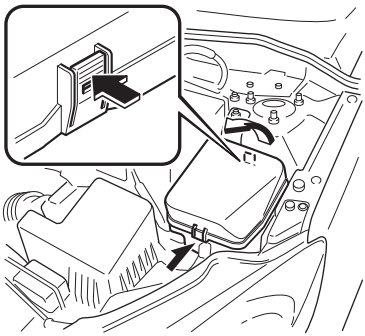

3. If any fuse but the MAIN fuse is blown, replace it with a new one **of the same amperage rating**.

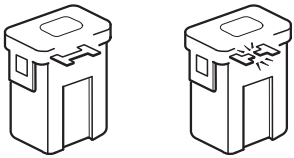

Normal Blown

⚠ *WARNING*

Do not replace the main fuse and multiplex slow blow fuse by yourself. Have an Authorised Mazda Repairer perform the replacement:
Replacing these fuses by yourself is dangerous because they are high current fuses. Incorrect replacement could cause an electrical shock or a short circuit resulting in a fire.

4. Reinstall the cover and make sure that it is securely installed.

▼Fuse Panel Description

Fuse block (Engine compartment)

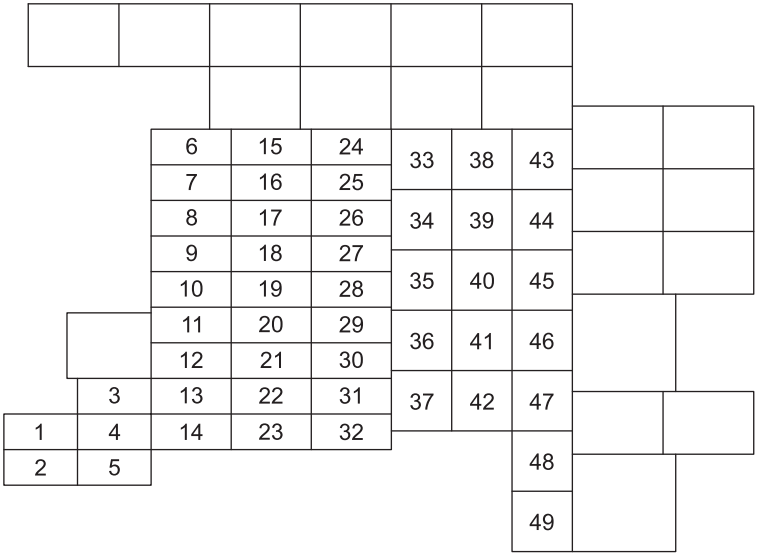

DESCRIPTION		FUSE RATING	PROTECTED COMPONENT
1	C/U IG1	15 A	For protection of various circuits
2	ENGINE IG1	7.5 A	Engine control system
3	SUNROOF	10 A	—
4	INTERIOR	15 A	Overhead light
5	ENG+B	7.5 A	Engine control system
6	AUDIO2	15 A	Audio system
7	METER1	10 A	Instrument cluster
8	SRS1	7.5 A	Air bag
9	METER2	7.5 A	Instrument cluster*
10	RADIO	7.5 A	Audio system
11	ENGINE3	15 A	Engine control system
12	ENGINE1	15 A	Engine control system
13	ENGINE2	15 A	Engine control system
14	AUDIO1	25 A	Audio system
15	A/C MAG	7.5 A	Air conditioner*

*Some models.

DESCRIPTION		FUSE RATING	PROTECTED COMPONENT
16	AT PUMP	15 A	Transaxle control system*
17	AT	15 A	Transaxle control system*
18	D.LOCK	25 A	Power door locks
19	H/L RH	20 A	Headlight (RH)
20	ENG+B2	7.5 A	Engine control system
21	TAIL	20 A	Tail lights, Number plate lights, Position lights
22	—	—	—
23	ROOM	25 A	Overhead light
24	FOG	15 A	Front fog lights*
25	H/CLEAN	20 A	Headlight washer*
26	STOP	10 A	Brake lights, Rear fog light*
27	HORN	15 A	Horn
28	H/L LH	20 A	Headlight (LH)
29	ABS/DSC S	30 A	ABS, Dynamic stability control system*
30	HAZARD	15 A	Hazard warning flashers, Direction indicator lights
31	FUEL PUMP	15 A	Fuel system*
32	FUEL WARM	25 A	Fuel warmer*
33	WIPER	20 A	Front window wiper
34	CABIN+B	50 A	For protection of various circuits
35	FAN2	30 A	Cooling fan*
36	FUEL PUMP	30 A	—
37	ABS/DSC M	50 A	ABS, Dynamic stability control system*
38	EVVT	20 A	Engine control system*
39	—	—	—
40	FAN1	30 A	Cooling fan*
41	FAN3	40 A	Cooling fan*
42	ENG.MAIN	40 A	Engine control system
43	EPS	60 A	Power steering system*
44	DEFOG	40 A	Rear window defogger
45	IG2	30 A	For protection of various circuits
46	INJECTOR	30 A	Engine control system*
47	HEATER	40 A	Air conditioner
48	P.WINDOW1	30 A	Power windows
49	DCDC DE	40 A	For protection of various circuits*

*Some models.

Fuse block (Left side)

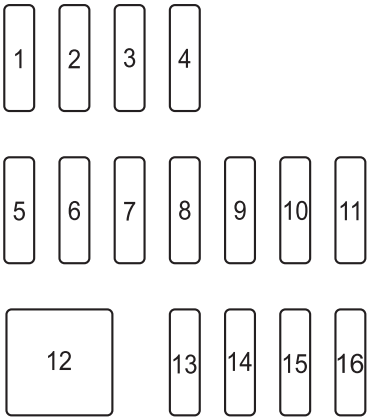

DESCRIPTION		FUSE RATING	PROTECTED COMPONENT
1	—	—	—
2	—	—	—
3	—	—	—
4	—	—	—
5	F.OUTLET	15 A	Accessory sockets
6	—	—	—
7	AT IND	7.5 A	AT shift indicator*
8	MIRROR	7.5 A	Power control mirror
9	—	—	—
10	P.WINDOW2	25 A	Power windows
11	R.WIPER	15 A	Rear window wiper and washer
12	—	—	—
13	—	—	—
14	SRS2/ESCL	15 A	Electronic steering lock
15	SEAT WARM	20 A	Seat warmer*
16	M.DEF	7.5 A	Mirror defogger*

*Some models.

Exterior Care

The paintwork on your Mazda represents the latest technical developments in composition and methods of application.

Environmental hazards, however, can harm the paint's protective properties, if proper care is not taken.

Here are some examples of possible damage, with tips on how to prevent them.

Etching Caused by Acid Rain or Industrial Fallout

Occurrence

Industrial pollutants and vehicle emissions drift into the air and mix with rain or dew to form acids. These acids can settle on a vehicle's finish. As the water evaporates, the acid becomes concentrated and can damage the finish.
And the longer the acid remains on the surface, the greater the chance is for damage.

Prevention

It is necessary to wash and wax your vehicle to preserve its finish according to the instructions in this section. These steps should be taken immediately after you suspect that acid rain has settled on your vehicle's finish.

Damage Caused by Bird Dropping, Insects, or Tree Sap

Occurrence

Bird droppings contain acids. If these are not removed they can eat away the clear and colour base coat of the vehicle's paintwork.

When insects stick to the paint surface and decompose, corrosive compounds form. These can erode the clear and colour base coat of the vehicle's paintwork if they are not removed.

Tree sap will harden and adhere permanently to the paint finish. If you scratch the sap off while it is hard, some vehicle paint could come off with it.

Prevention

It is necessary to have your Mazda washed and waxed to preserve its finish according to the instructions in this section. This should be done as soon as possible.

Bird droppings can be removed with a soft sponge and water. If you are travelling and these are not available, a moistened tissue may also take care of the problem. The cleaned area should be waxed according to the instructions in this section.
Insects and tree sap are best removed with a soft sponge and water or a commercially available chemical cleaner.

Another method is to cover the affected area with dampened newspaper for one to two hours. After removing the newspaper, rinse off the loosened debris with water.

Water Marks

Occurrence

Rain, fog, dew, and even tap water can contain harmful minerals such as salt and lime. If moisture containing these minerals settles on the vehicle and evaporates, the minerals will concentrate and harden to form white rings. The rings can damage your vehicle's finish.

Prevention

It is necessary to wash and wax your vehicle to preserve its finish according to the instructions in this section. These steps should be taken immediately after you find water marks on your vehicle's finish.

Paint Chipping

Occurrence

Paint chipping occurs when gravel thrown in the air by another vehicle's tyres hits your vehicle.

How to avoid paint chipping

Keeping a safe distance between you and the vehicle ahead reduces the chances of having your paint chipped by flying gravel.

NOTE

- The paint chipping zone varies with the speed of the vehicle. For example, when travelling at 90 km/h (56 mph), the paint chipping zone is 50 m (164 ft).
- In low temperatures a vehicle's finish hardens. This increases the chance of paint chipping.
- Chipped paint can lead to rust forming on your Mazda. Before this happens, repair the damage by using Mazda touch-up paint according to the instructions in this section. Failure to repair the affected area could lead to serious rusting and expensive repairs.

Follow **all** label and container directions when using a chemical cleaner or polish. Read all warnings and cautions.

▼Maintaining the Finish

Washing

⚠ CAUTION

- When the wiper lever is in the AUTO position and the ignition is switched ON, the wipers may move automatically in the following cases:
  - If the windscreen above the rain sensor is touched or wiped with a cloth.
  - If the windscreen is struck with a hand or other object from either outside or inside the vehicle.

  Keep hands and scrapers clear of the windscreen when the wiper lever is in the AUTO position and the ignition is switched ON as fingers could be pinched or the wipers and wiper blades damaged when the wipers activate automatically.
  If you are going to clean the windscreen, be sure the wipers are turned off completely (when it is most likely that the engine is left running) this is particularly important when clearing ice and snow.
- Do not spray water in the engine compartment. Otherwise, it could result in engine-starting problems or damage to electrical parts.
- When washing and waxing the vehicle, be careful not to apply excessive force to any single area of the vehicle roof or the aerial. Otherwise, you could dent the vehicle or damage the aerial.

To help protect the finish from rust and deterioration, wash your Mazda thoroughly and frequently, at least once a month, with lukewarm or cold water.

If the vehicle is washed improperly, the paint surface could be scratched. Here are some examples of how scratching could occur.

Scratches occur on the paint surface when:

- The vehicle is washed without first rinsing off dirt and other foreign matter.
- The vehicle is washed with a rough, dry, or dirty cloth.
- The vehicle is washed at a car wash that uses brushes that are dirty or too stiff.
- Cleansers or wax containing abrasives are used.

NOTE

- Mazda is not responsible for scratches caused by automatic car washes or improper washing.
- Scratches are more noticeable on vehicles with darker paint finishes.

To minimize scratches on the vehicle's paint finish:

- Rinse off any dirt or other foreign matter using lukewarm or cold water before washing.
- Use plenty of lukewarm or cold water and a soft cloth when washing the vehicle. Do not use a nylon cloth.
- Rub gently when washing or drying the vehicle.
- Take your vehicle only to a car wash that keeps its brushes well maintained.
- Do not use abrasive cleansers or wax that contain abrasives.

⚠ CAUTION

- Do not use steel wool, abrasive cleaners, or strong detergents containing highly alkaline or caustic agents on chrome-plated or anodised aluminium parts. This may damage the protective coating; also, cleaners and detergents may discolour or deteriorate the paint.
- **(With detachable aerial)**
  To prevent damaging the aerial, remove it before entering a car wash facility or passing beneath a low overhead clearance.

Pay special attention to removing salt, dirt, mud, and other foreign material from the underside of the wings, and make sure the drain holes in the lower edges of the doors and rocker panels are clean.

Insects, tar, tree sap, bird droppings, industrial fallout, and similar deposits can damage the finish if not removed immediately. When prompt washing with plain water is ineffective, use a mild soap made for use on vehicles.

Thoroughly rinse off all soap with lukewarm or cold water. Do not allow soap to dry on the finish.

After washing the vehicle, dry it with a clean chamois to prevent water spots from forming.

⚠ *WARNING*

Dry off brakes that have become wet by driving slowly, releasing the accelerator pedal and lightly applying the brakes several times until the brake performance returns to normal:
Driving with wet brakes is dangerous. Increased stopping distance or the vehicle pulling to one side when braking could result in a serious accident. Light braking will indicate whether the brakes have been affected.

When using an automatic car wash

- Retract the door mirrors.
- The automatic car wash brushes could reduce the paint lustre or hasten paint deterioration.

When using a high water pressure car wash

High water temperature and high water pressure car washers are available depending on the type of car wash machine. If the car washer nozzle is put too close to the vehicle, the force of the spray could damage or deform the molding, affect the sealability of parts, and allow water to penetrate the interior. Keep a sufficient space (30 cm (12 in) or more) between the nozzle and the vehicle. In addition, do not spend too much time spraying the same area of the vehicle, and be very careful when spraying between gaps in doors and around windows.

Waxing

Your vehicle needs to be waxed when water no longer beads on the finish. Always wash and dry the vehicle before waxing it. In addition to the vehicle body, wax the metal trim to maintain its lustre.

1. Use wax which contains no abrasives. Waxes containing abrasive will remove paint and could damage bright metal parts.
2. Use a good grade of natural wax for metallic, mica, and solid colours.
3. When waxing, coat evenly with the sponge supplied or a soft cloth.
4. Wipe off the wax with a soft cloth.

NOTE
A spot remover to remove oil, tar, and similar materials will usually also take off the wax. Rewax these areas even if the rest of the vehicle does not need it.

▼Paint Damage Touch-up

Repair damage to the finish caused by stone chipping, damage during parking etc., by using Mazda touch-up paint before rust begins to form. First, remove the dirt and grease with a clean soft cloth.

If rust has already begun to form:

1. Remove rust completely with sandpaper.
2. Wipe with a clean soft cloth.
3. Apply rust preventive primer to the area.
4. After drying it completely, apply a suitable top coat material to the area.

Of course there will be no problem if you assign the work to an expert repairer, we recommend an Authorised Mazda Repairer.

▼Cavity Protection

Cavities are treated for protection at the factory, but additional protective treatment after the vehicle has been put into use will extend the life of the body.
We recommend that you consult an expert repairer, we recommend an Authorised Mazda Repairer concerning this additional precaution.

▼Bright-Metal Maintenance

- Use tar remover to remove road tar and insects. Never do this with a knife or similar tool.
- To prevent corrosion on bright-metal surfaces, apply wax or chrome preservative and rub it to a high lustre.
- During cold weather or in coastal areas, cover bright-metal parts with a coating of wax or preservative heavier than usual. It would also help to coat them with noncorrosive petroleum jelly or some other protective compound.

⚠ CAUTION

Do not use steel wool, abrasive cleaners, or strong detergents containing highly alkaline or caustic agents on chrome-plated or anodised aluminium parts. This may result in damage to the protective coating and cause discolouration or paint deterioration.

▼Undercoating

This special coating is applied to the critical parts of the underside to protect vehicles from damage caused by chemicals or stones. This coating is liable to be damaged with time. Check this coating periodically.

An expert repairer, we recommend an Authorised Mazda Repairer are well informed on how repairs should be made. Consult an expert repairer, we recommend an Authorised Mazda Repairer.

▼Aluminium Wheel Maintenance*

A protective coating is provided over the aluminium wheels. Special care is needed to protect this coating.

⚠ CAUTION

Do not use any detergent other than mild detergent. Before using any detergent, verify the ingredients. Otherwise, the product could discolour or stain the aluminium wheels.

NOTE

- Do not use a wire brush or any abrasive cleaner, polishing compound, or solvent on aluminium wheels. They may damage the coating.
- Always use a sponge or soft cloth to clean the wheels.
  Rinse the wheels thoroughly with lukewarm or cold water. Also, be sure to clean the wheels after driving on dusty or salted roads to help prevent corrosion.
- Avoid washing your vehicle in an automatic car wash that uses high-speed or hard brushes.
- **(16-inch wheel vehicle)**
  If your aluminium wheels lose lustre, apply wax which contains no polishing powder.

*Some models.

▼Plastic Part Maintenance

- When cleaning the plastic lenses of the lights, do not use petrol, paraffin, rectified spirit, paint, thinner, highly acidic detergents, or strongly alkaline detergents. Otherwise, these chemical agents can discolour or damage the surfaces resulting in a significant loss in functionality. If plastic parts become inadvertently exposed to any of these chemical agents, flush with water immediately.
- If plastic parts such as the bumpers become inadvertently exposed to chemical agents or fluids such as petrol, oil, engine coolant, or battery fluid, it could cause discolouration, staining, or paint peeling. Wipe off any such chemical agents or fluids using a soft cloth immediately.
- High water temperature and high water pressure car washers are available depending on the type of high pressure car washer device. If the car washer nozzle is put too close to the vehicle or aimed at one area for an extended period of time, it could deform plastic parts or damage the paint.
- Do not use wax containing compounds (polish). Otherwise, it could result in paint damage.
- In addition, do not use an electrical or air tool to apply wax. Otherwise, the frictional heat generated could result in deformation of plastic parts or paint damage.

Interior Care

⚠ *WARNING*

Do not spray water into the vehicle cabin:
Spraying water into the vehicle cabin is dangerous as electrical devices such as the audio and switches could get wet resulting in a malfunction or vehicle fire.

NOTE

- Do not wipe the interior using alcohol, chlorine bleach, or organic solvents such as thinner, benzene, and petrol. Otherwise, it may cause discolouration or stains.
- Rubbing hard with a stiff brush or cloth may cause damage.

If the vehicle interior becomes soiled by any of the following, wipe it off immediately using a soft cloth.
Leaving it uncleaned could cause discolouration, stains, cracks, or peeling of the coating, and it will make it hard to wipe off later.

- Beverage or fragrance
- Grease or oil
- Soiling

▼Seat Belt Maintenance

1. Clean the soiled area by lightly dabbing it with a soft cloth soaked in a mild detergent (approx. 5%) diluted with water.
2. Wipe off the remaining detergent using a cloth soaked in clean water and wrung out well.
3. Before retracting seat belts which have been pulled out for cleaning, dry them off thoroughly and make sure there is no remaining moisture on them.

⚠ *WARNING*

If a seat belt appears frayed or has abrasions, have it replaced by an Authorised Mazda Repairer:
If a seat belts is used under such a condition, it cannot function at its full capacity which could result in serious injury or death.

Use a mild detergent to remove soiling from a seat belt:
If organic solvents are used for cleaning the seat belts or they become stained or bleached, there is the possibility of them becoming weakened and as a result, they may not function at their full capacity which could cause serious injury or death.

NOTE

Clean seat belts diligently if they get dirty. Leaving them uncleaned will make it difficult to clean them later, and it may affect the smooth retracting of the seat belt.

▼Vinyl Upholstery Maintenance

Remove dust and dirt from the vinyl upholstery using a brush or vacuum. Remove soiling from vinyl upholstery using a leather and vinyl upholstery cleaner.

▼Upholstery Maintenance

1. Clean the soiled area by lightly dabbing it with a soft cloth soaked in a mild detergent (approx. 5%) diluted with water.
2. Wipe off the remaining detergent using a cloth soaked in clean water and wrung out well.

▼Leather Upholstery Maintenance*

1. Remove dust and sand using a vacuum cleaner.
2. Wipe off the soiled area with a soft cloth and a suitable, special cleaner or a soft cloth soaked in a mild detergent (about 5%) diluted with water.
3. Wipe off the remaining detergent using a cloth soaked in clean water and wrung out well.
4. Remove moisture with a dry, soft cloth and allow the leather to further dry in a well-ventilated, shaded area. If the leather gets wet such as from rain, remove the moisture and dry it as soon as possible.

*Some models.

NOTE

- Because genuine leather is a natural material, its surface is not uniform and it may have natural scars, scratches, and wrinkles.
- To maintain the quality for as long as possible, periodical maintenance, about twice a year, is recommended.
- If the leather upholstery comes into contact with any of the following, clean it immediately.
  Leaving it uncleaned could cause premature wear, mold, or stains.
  - Sand or dirt
  - Grease or oil, such as hand cream
  - Alcohol, such as in cosmetic or hair dressing items
- If the leather upholstery gets wet, promptly remove moisture with a dry cloth. Remaining moisture on the surface may cause deterioration such as hardening and shrinkage.
- Exposure to direct sunlight for long periods may cause deterioration and shrinkage. When parking the car under direct sunlight for long periods, shade the interior using sunshades.
- Do not leave vinyl products on the leather upholstery for long periods. They may affect the leather quality and colouring. If the cabin temperature becomes hot, the vinyl may deteriorate and adhere to the genuine leather.

▼Plastic Part Maintenance

⚠ CAUTION

Do not use polishing agents.
Depending on the product ingredients, they could cause discolouration, stains, cracks or peeling of the coating.

▼Instrument Panel Top Maintenance

1. Wipe the soiled area with a soft cloth soaked in a mild detergent (approx. 5%) diluted with water.
2. Wipe off the remaining detergent using a cloth soaked in clean water and wrung out well.

▼Active Driving Display Maintenance*

The combiner and mirror surface have a special coating. When cleaning it, do not use a hard cloth, a cloth with a rough surface, or cleaning detergent. Use a fine-textured, soft cloth.
If a chemical solvent gets on the combiner or mirror surface, wipe it off immediately. Otherwise, they could be damaged and the surface coating could be scratched.

*Some models.

▼Panel Maintenance

If a panel becomes soiled, wipe it off with a soft cloth soaked in clean water and thoroughly wrung out.
If some areas require further cleaning, use the following procedure:

1. Wipe the soiled area with a soft cloth soaked in a mild detergent (approx. 5 %) diluted with water.
2. Wipe off the remaining detergent using a cloth soaked in clean water and wrung out well.

NOTE

Be particularly careful when cleaning shiny surface panels and metallic parts such as plating as they can be scratched easily.

▼Cleaning the Window Interiors

If the windows become covered with an oily, greasy, or waxy film, clean them with glass cleaner. Follow the directions on the container.

⚠ CAUTION

- Do not scrape or scratch the inside of the window glass. It could damage the thermal filaments and the aerial lines.
- When washing the inside of the window glass, use a soft cloth dampened in lukewarm water, gently wiping the thermal filaments and the aerial lines.
  Use of glass cleaning products could damage the thermal filaments and the aerial lines.

7 If Trouble Arises

Helpful information on what to do if a problem arises with the vehicle.

Parking in an Emergency 7-2
Parking in an Emergency 7-2
Roadside Emergency Triangle Retaining Strap (Hatchback)* 7-2

Flat Tyre 7-3
Spare Tyre and Tool Storage 7-3
Emergency Flat Tyre Repair Kit* 7-9
Changing a Flat Tyre (With Spare Tyre) 7-16

Battery Runs Out 7-24
Jump-Starting 7-24

Emergency Starting 7-27
Starting a Flooded Engine (SKYACTIV-G 1.3 and SKYACTIV-G 1.5) 7-27
Push-Starting 7-27
Running Out of Fuel (SKYACTIV-D 1.5) 7-28

Overheating 7-29
Overheating 7-29

Emergency Towing 7-31
Towing Description 7-31
Towing/Tiedown Hooks 7-32

Warning/Indicator Lights and Warning Sounds 7-35
If a Warning Light Turns On or Flashes 7-35
Message Indicated on Display* 7-46
Warning Sound is Activated 7-48

When Liftgate/Boot Lid Cannot be Opened 7-53
When Liftgate/Boot Lid Cannot be Opened 7-53

Active Driving Display Does Not Operate 7-55
If the Active Driving Display does not operate 7-55

*Some models.

Parking in an Emergency

The hazard warning lights should always be used when you stop on or near a roadway in an emergency.

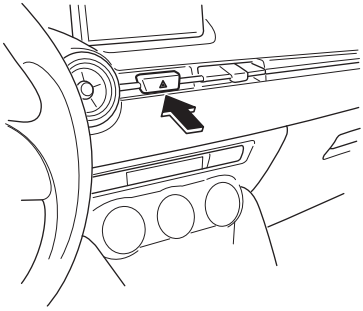

The hazard warning lights warn other drivers that your vehicle is a traffic hazard and that they must take extreme caution when near it.

Depress the hazard warning flasher and all the direction indicators will flash. The hazard warning indicator lights in the instrument cluster flash simultaneously.

NOTE

- The direction indicators do not work when the hazard warning lights are on.
- Check local regulations about the use of hazard warning lights while the vehicle is being towed to verify that it is not in violation of the law.

Roadside Emergency Triangle Retaining Strap (Hatchback)*

Keep the roadside emergency triangle in the right side trim and secure it with the strap.

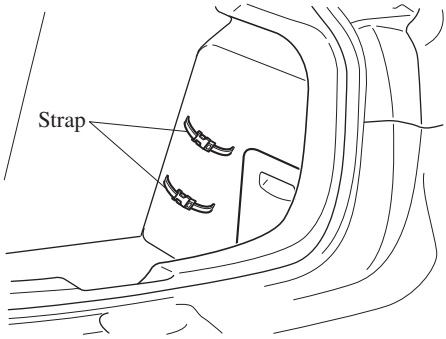

*Some models.

Spare Tyre and Tool Storage

NOTE
Your vehicle may or may not be equipped with a spare tyre, jack, and wheel brace. For details, consult an Authorised Mazda Repairer.

Flat Tyre

Spare tyre and tools are stored in the locations illustrated in the diagram.

Saloon (Type A)

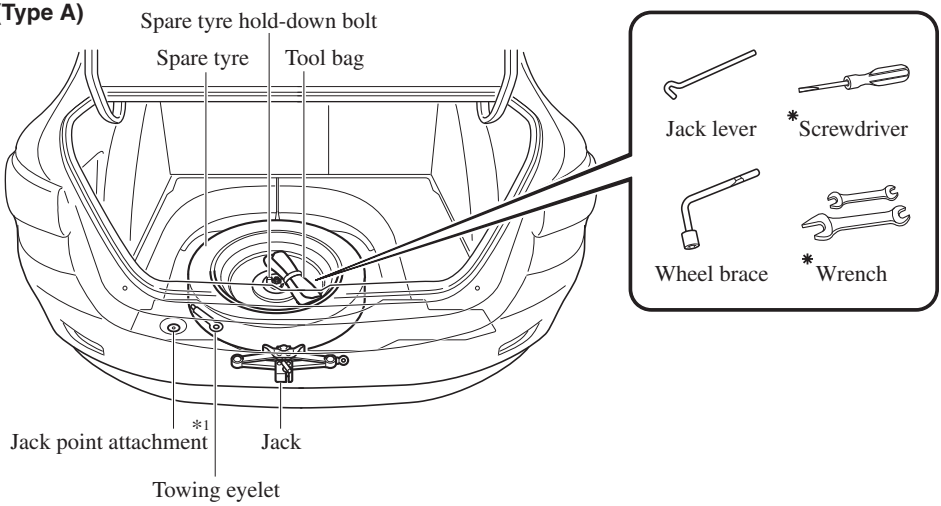

(Type B)

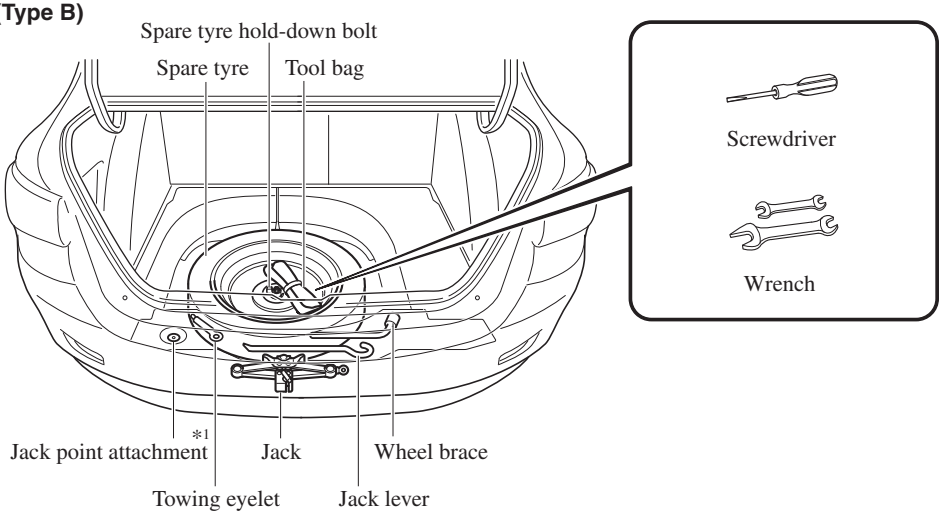

*1 The jack point attachment can be used by vehicle repair shops and road assistance services. Consult an Authorised Mazda Repairer for details.

*Some models.

Hatchback

With spare tyre

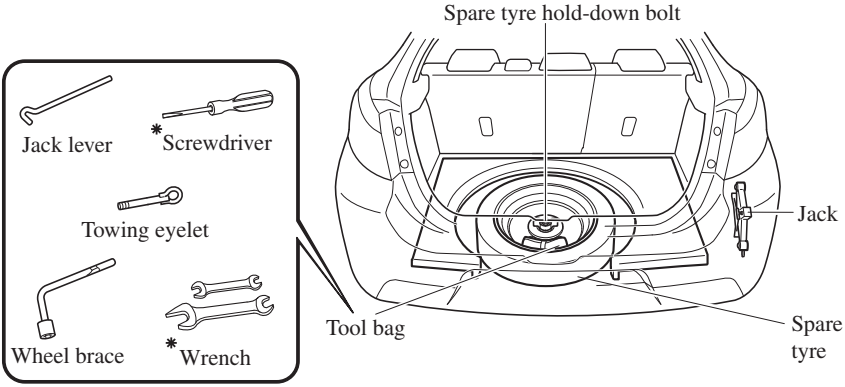

Without spare tyre

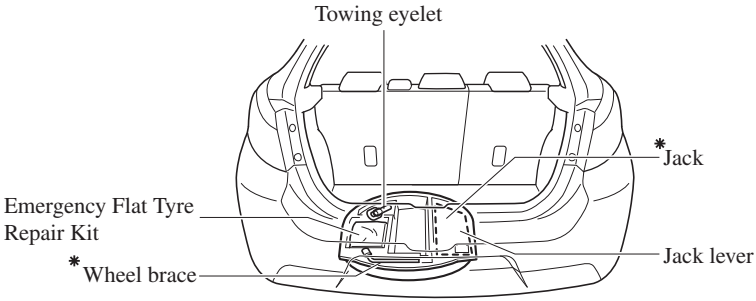

*Some models.

▼Jack*

To remove the jack

(With spare tyre)

Saloon

1. Lift the boot mat.
2. Remove the boot board.

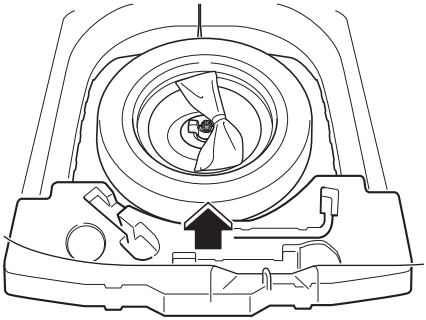

3. Turn the wing bolt and jack screw anticlockwise.

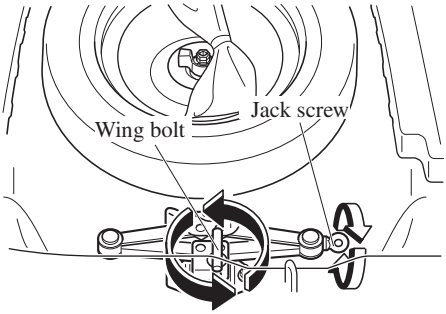

Hatchback

1. Remove the cover.

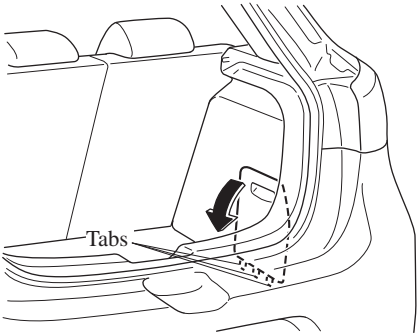

2. Turn the wing bolt and jack screw anticlockwise.

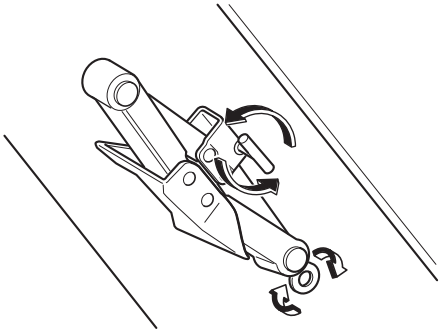

*Some models.

(Without spare tyre)

1. Lift the luggage compartment mat.

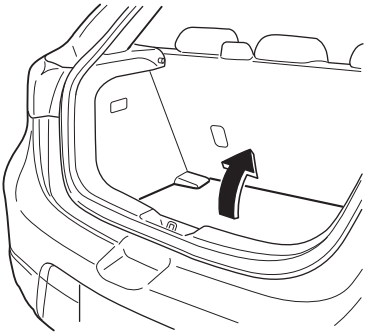

2. Remove the jack.

To secure the jack

(With spare tyre)

1. Insert the wing bolt into the jack with the jack screw pointing to the right (Saloon) or down (Hatchback) and turn the wing bolt clockwise to temporarily tighten it.
2. Turn the jack screw in the direction shown in the figure.
   Saloon

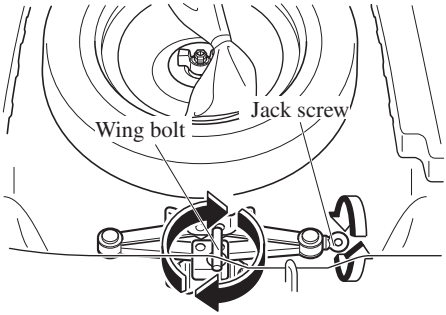

   Hatchback

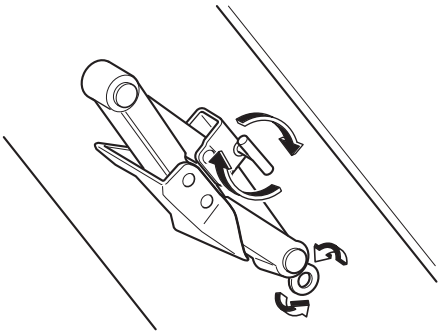

3. Turn the wing bolt completely to secure the jack.

NOTE
If the jack is not completely secured, it could rattle while driving. Make sure the jack screw is sufficiently tightened.

4. Return the boot board to its original position (Saloon), or insert the cover tabs and install the cover (Hatchback).

NOTE
Verify that the cover is securely installed.

(Without spare tyre)

Perform the removal procedure in reverse.

Maintenance

- Always keep the jack clean.
- Make sure the moving parts are kept free from dirt or rust.
- Make sure the screw thread is adequately lubricated.

▼Spare Tyre*

Your Mazda has a temporary spare tyre. The temporary spare tyre is lighter and smaller than a conventional tyre, and is designed only for emergency use and should be used only for VERY short periods. Temporary spare tyres should NEVER be used for long drives or extended periods.

⚠ *WARNING*

Do not install the temporary spare tyre on the front wheels (driving wheels):
Driving with the temporary spare tyre on one of the front driving wheels is dangerous. Handling will be affected. You could lose control of the vehicle, especially on ice or snow bound roads, and have an accident. Move a regular tyre to the front wheel and install the temporary spare tyre to the rear.

⚠ CAUTION

- When using the temporary spare tyre, driving stability may decrease compared to when using only the conventional tyre. Drive carefully.
- To avoid damage to the temporary spare tyre or to the vehicle, observe the following precautions:
  - Do not exceed 80 km/h (50 mph).
  - Avoid driving over obstacles. Also, do not drive through an automatic car wash. This tyre's diameter is smaller than a conventional tyre, so the ground clearance is reduced.
  - Do not use a tyre chain on this tyre because it will not fit properly.
  - Do not use your temporary spare tyre on any other vehicle, it has been designed only for your Mazda.
  - Use only one temporary spare tyre on your vehicle at the same time.

*Some models.

To remove the spare tyre

1. Lift the boot/luggage compartment mat.

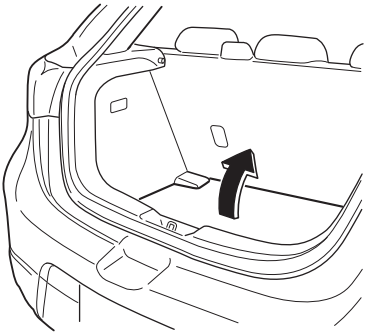

2. Turn the spare tyre hold-down bolt anticlockwise.

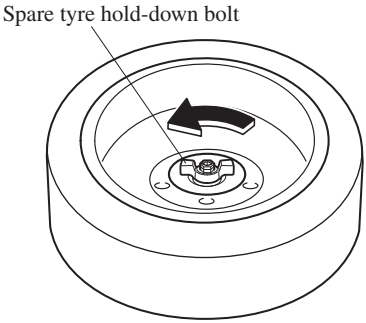

To secure the spare tyre

Store the spare tyre in the reverse order of removal. After storing, verify that the spare tyre is stored securely.

Emergency Flat Tyre Repair Kit*

The emergency flat tyre repair kit included with your Mazda is for a temporary repair of a slightly damaged flat tyre resulting from running over nails or similar sharp objects on the road surface.
Perform the emergency flat tyre repair without removing the nail or similar sharp object which punctured the tyre.

NOTE

Your vehicle is not equipped with a spare tyre. In the event of a flat tyre, use the emergency flat tyre repair kit to repair the tyre temporarily. When doing the repair, refer to the instructions included in the emergency flat tyre repair kit. If an emergency repair was performed on a flat tyre using the emergency flat tyre repair kit, have an expert repairer, we recommend an Authorised Mazda Repairer, repair or replace the tyre as soon as possible.

*Some models.

▼About the Emergency Flat Tyre Repair Kit

The emergency flat tyre repair kit includes the following items.

Tyre sealant

Compressor

Valve core tool

Injection hose

Spare valve core

Speed restriction sticker

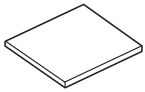
Instructions

⚠ *WARNING*

Do not allow children to touch the tyre sealant:

- ***Ingestion of tyre sealant is dangerous. In the event tyre sealant is accidentally swallowed, drink large amounts of water immediately and seek medical assistance.***
- ***Tyre sealant that comes into contact with the eyes and skin is dangerous. If tyre sealant enters the eyes or contacts the skin, flush immediately with large amounts of water and seek medical assistance.***

NOTE

- The tyre sealant cannot be reused. Purchase new tyre sealant at an Authorised Mazda Repairer.
- The emergency flat tyre repair kit cannot be used in the following cases.
  Consult an expert repairer, we recommend an Authorised Mazda Repairer.
  - The period of effective use for the tyre sealant has expired. (The period of effectiveness is indicated on the bottle label.)
  - The tear or puncture exceeds about 4 mm (0.16 in).
  - The damage has occurred to an area of the tyre other than the tread.
  - The vehicle has been driven with nearly no air remaining in the tyre.
  - The tyre has come off the wheel rim.
  - Damage to the wheel rim has occurred.
  - The tyre has two or more punctures.

▼Using the Emergency Flat Tyre Repair Kit

1. Park on a level surface off the right-of-way and set the parking brake.
2. Put a vehicle with an automatic transaxle in Park (P), a manual transaxle in Reverse (R) or 1, and turn off the engine.
3. Turn on the hazard warning flasher.

4. Unload passengers and luggage, and remove the emergency flat tyre repair kit.

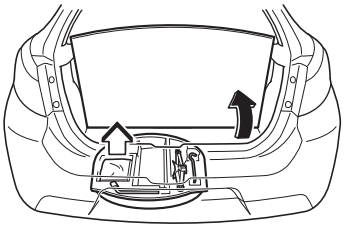

5. Shake the tyre sealant well.

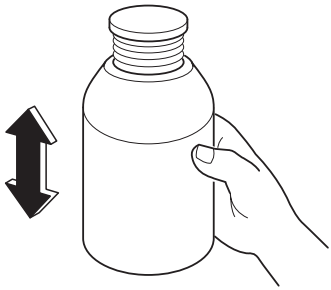

⚠ CAUTION

If the bottle is shaken after the injection hose is screwed on, tyre sealant could spray out from the injection hose. Tyre sealant contacting clothing or other objects may be impossible to remove. Shake the bottle before screwing on the injection hose.

NOTE

The tyre sealant can be used at outside temperatures down to -30 °C (-22 °F). In extremely cold temperatures (0 °C (32 °F) or below), the tyre sealant hardens easily and injection of the sealant will be difficult. Warm the sealant inside the vehicle before doing the injection work.

6. Remove the cap from the bottle. Screw on the injection hose with the bottle's inner cap left on to break the inner cap.

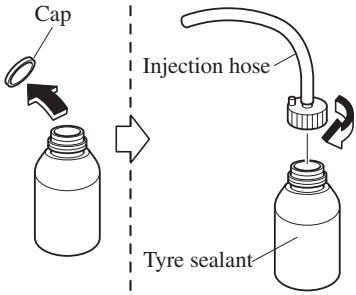

7. Remove the valve cap from the flat tyre. Press the back of a valve core tool to the core of the tyre valve and bleed all the remaining air.

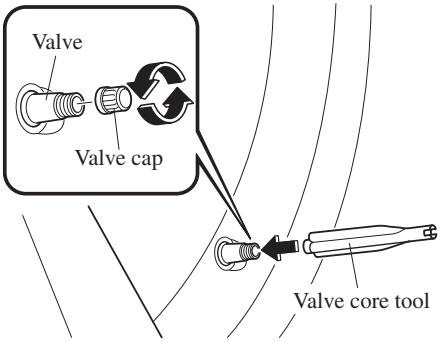

⚠ CAUTION

If there is air remaining in the tyre when the valve core is removed, the valve core could fly out. Remove the valve core carefully.

8. Turn the valve core anticlockwise with the valve core tool and remove the valve core.

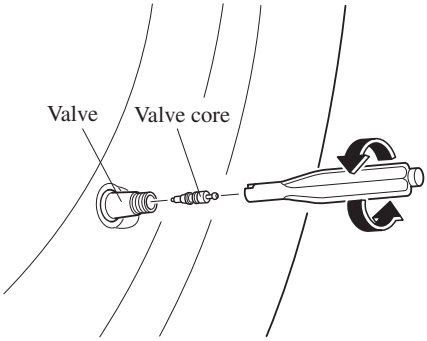

NOTE

Store the valve core in a place where it will not get dirty.

9. Insert the injection hose into the valve.

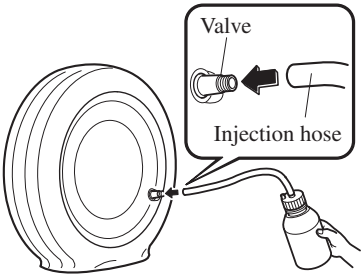

10. Hold the bottom of the bottle upright, squeeze the bottle with your hands, and inject the entire amount of tyre sealant into the tyre.

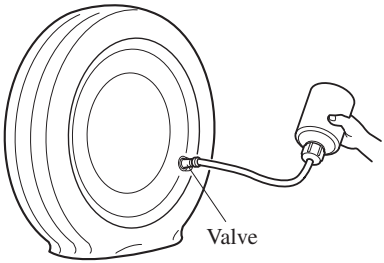

11. Pull out the injection hose from the valve.

NOTE

The tyre sealant cannot be reused. Purchase a new tyre sealant kit at an Authorised Mazda Repairer.

12. Reinsert the valve core into the valve and turn it clockwise to install it.

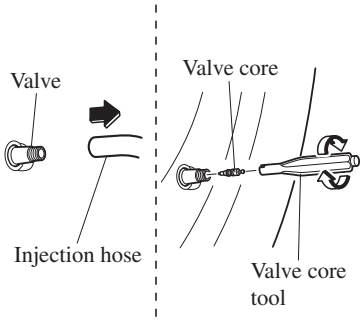

NOTE

Do not throw away the empty tyre sealant bottle after use. Return the empty tyre sealant bottle to an Authorised Mazda Repairer when replacing the tyre. The empty tyre sealant bottle will need to be used to extract and dispose of the used sealant from the tyre.

13. After that, install the injection hose to the tab of the bottle to prevent leakage of any remaining sealant.

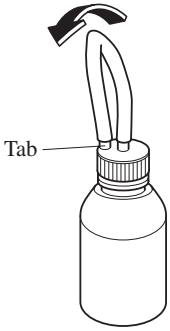

14. Attach the vehicle speed restriction sticker in a place where the driver can easily see it.

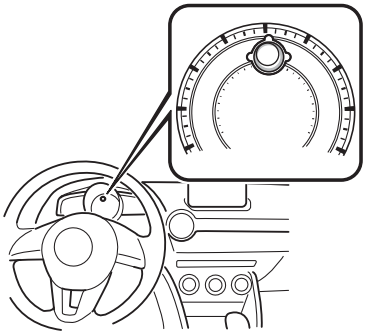

⚠ *WARNING*

Do not attach the vehicle speed restriction sticker to the instrument panel, as it would obstruct vision of areas such as warning light indicators or the speedometer:
Attaching the vehicle speed restriction sticker to the steering wheel pad is dangerous. The sticker could interfere with air bag inflation and cause serious injury.

15. Install the compressor hose to the tyre valve.

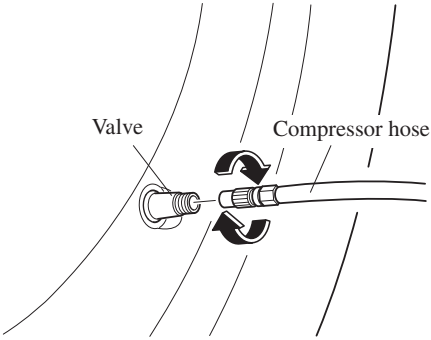

16. Insert the compressor plug into the interior accessory socket and switch the ignition to ACC.

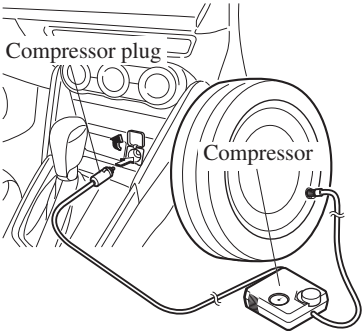

⚠ CAUTION

- Before pulling out the compressor plug from the electrical socket, make sure the compressor power switch is off.
- The compressor turns on and off with the push-button switch.

17. Turn the compressor switch on and inflate the tyre carefully to the correct inflation pressure.

⚠ WARNING

Never operate the compressor above 300 kPa (3.1 kgf/cm², 3 bar, 43.5 psi):
Operating the compressor above 300 kPa (3.1 kgf/cm², 3 bar, 43.5 psi) is dangerous. When the inflation pressure rises above 300 kPa (3.1 kgf/cm², 3 bar, 43.5 psi), heated air will be exhausted from the back of the compressor and you could be burned.

NOTE

- Check the tyre inflation pressure label (driver's door frame) for the correct tyre inflation pressure.
- Do not use the compressor for longer than 10 minutes because using the compressor for long periods could damage it.
- If the tyre does not inflate, repair of the tyre may not be possible. If the tyre does not reach the correct inflation pressure within a 10-minute period, it probably has received more extensive damage.
  When this happens, the emergency flat tyre repair kit cannot be used to repair the tyre. Contact an expert repairer, we recommend an Authorised Mazda Repairer.
- If the tyre has been over-inflated, loosen the screw cap on the compressor and bleed some of the air out.

18. When the tyre has been inflated to the proper inflation pressure, turn the compressor switch off and remove the compressor hose from the tyre valve.
19. Install the tyre valve cap.
20. Put the emergency flat tyre repair kit in the luggage compartment/boot and continue driving.

⚠ CAUTION

- Drive carefully to an expert repairer, we recommend an Authorised Mazda Repairer and keep the vehicle speed below 80 km/h (50 mph).
- If the vehicle is driven 80 km/h (50 mph) or higher, the vehicle might begin to vibrate.

NOTE

(With tyre pressure monitoring system)
If the tyre is not properly inflated, the tyre pressure monitoring system warning light will illuminate.

21. After driving the vehicle for 10 minutes or 5 km (3 miles), check the tyre pressure with the tyre pressure gauge equipped with the compressor. If the tyre pressure has fallen below the correct tyre pressure, inflate the tyre to the correct pressure again following the steps from number 16.

⚠ CAUTION

- If the tyre inflation pressure falls below 130 kPa (1.3 kgf/cm^2 or bar, 18.9 psi), repair cannot be done with the repair kit. Park the vehicle on a level surface off the right-of-way and contact an expert repairer, we recommend an Authorised Mazda Repairer.
- If the tyre inflation pressure continues to remain low after repeating steps 15 to 21, park the vehicle on a level surface off the right-of-way and contact an expert repairer, we recommend an Authorised Mazda Repairer.

NOTE

When checking the tyre inflation pressure with the tyre pressure gauge on the compressor unit, make sure the compressor switch is turned off.

22. If the tyre inflation pressure remains stable, the tyre repair is complete. Drive the vehicle with care to an expert repairer, we recommend an Authorised Mazda Repairer to have the tyre replaced.

⚠ CAUTION

- A tyre that has been temporarily repaired with the tyre sealant cannot be reused. Mazda recommends replacing the tyre with a new one.
- The wheel can be reused after any sealant adhering to it is wiped off and carefully inspected. However, replace the tyre valve with a new one.

▼Inspecting the Emergency Flat Tyre Repair Kit

Inspect the emergency flat tyre repair kit at regular intervals.

- Check the tyre sealant period of effective use.
- Check the operation of the tyre compressor.

NOTE

The tyre sealant has a period of effective use. Check the period of effective use indicated on the bottle label and do not use it if it has expired. Have the tyre sealant replaced at an Authorised Mazda Repairer before the period of effective use has expired.

Changing a Flat Tyre (With Spare Tyre)

NOTE

If the following occurs while driving, it could indicate a flat tyre.

- Steering becomes difficult.
- The vehicle begins to vibrate excessively.
- The vehicle pulls in one direction.

If you have a flat tyre, drive slowly to a level spot that is well off the road and out of the way of traffic to change the tyre. Stopping in traffic or on the shoulder of a busy road is dangerous.

⚠ WARNING

Be sure to follow the directions for changing a tyre:
Changing a tyre is dangerous if not done properly. The vehicle can slip off the jack and seriously injure someone. No person should place any portion of their body under a vehicle that is supported by a jack.

Never allow anyone inside a vehicle supported by a jack:
Allowing someone to remain in a vehicle supported by a jack is dangerous. The occupant could cause the vehicle to fall resulting in serious injury.

NOTE

Make sure the jack is well lubricated before using it.

1. Park on a level surface off the right-of-way and firmly set the parking brake.
2. Put a vehicle with an automatic transaxle in Park (P), a manual transaxle in Reverse (R) or 1, and turn off the engine.
3. Turn on the hazard warning flasher.
4. Have everyone get out of the vehicle and away from the vehicle and traffic.
5. Remove the jack, tool, and spare tyre (page 7-3).
6. Block the wheel diagonally opposite the flat tyre. When blocking a wheel, place a tyre block both in front and behind the tyre.

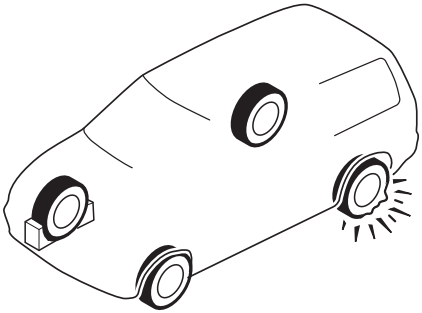

NOTE

When blocking a tyre, use rocks or wood blocks of sufficient size if possible to hold the tyre in place.

▼Removing a Flat Tyre

1. If your vehicle is equipped with a wheel cover, pry off the wheel cover with the bevelled end of the jack lever.

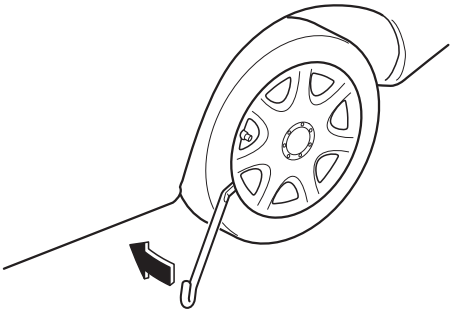

NOTE

Force the end of the jack lever firmly between wheel and cover, or removal will be difficult.

⚠ CAUTION

Align the notch on the wheel cover with the valve stem when installing it.

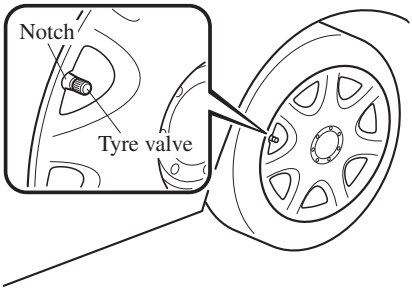

Damage could occur during installation if the wheel cover is not properly aligned.

2. Loosen the wheel nuts by turning them anticlockwise one turn each, but do not remove any wheel nuts until the tyre has been raised off the ground.

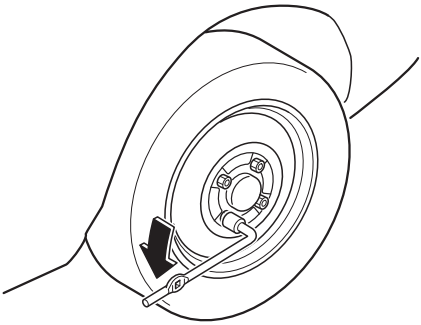

3. Place the jack on the ground.

4. Turn the jack screw in the direction shown in the figure and adjust the jack head so that it is close to the jack-up position.

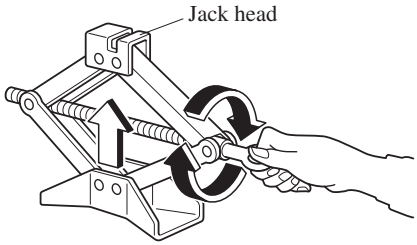

5. Place the jack under the jack-up position closest to the tyre being changed with the jack head squarely under the jack-up point.

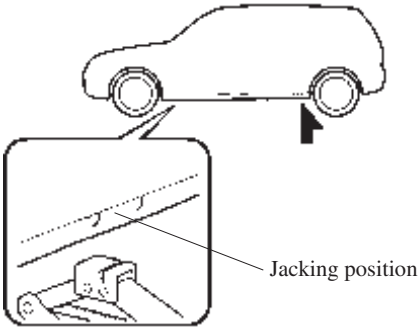

6. Continue raising the jack head gradually by rotating the screw with your hand until the jack head is inserted into the jack-up position.

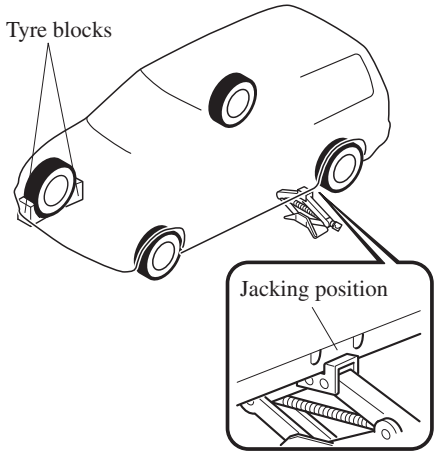

⚠ *WARNING*

Use only the front and rear jacking positions recommended in this manual:
Attempting to jack the vehicle in positions other than those recommended in this manual is dangerous. The vehicle could slip off the jack and seriously injure or even kill someone. Use only the front and rear jacking positions recommended in this manual.

Do not jack up the vehicle in a position other than the designated jack-up position or place any objects on or under the jack:
Jacking up the vehicle in a position other than the designated jack-up position or placing objects on or under the jack is dangerous as it could deform the vehicle body or the vehicle could fall off the jack resulting in an accident.

Use only the jack provided with your Mazda:
Using a jack that is not designed for your Mazda is dangerous. The vehicle could slip off the jack and seriously injure someone.

Never place objects under the jack:
Jacking the vehicle with an object under the jack is dangerous. The jack could slip and someone could be seriously injured by the jack or the falling vehicle.

7. Insert the jack lever and attach the wheel brace to tyre jack.

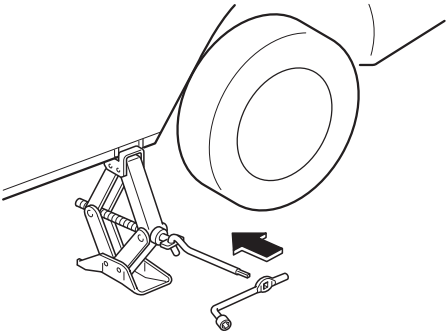

8. Turn the jack handle clockwise and raise the vehicle high enough so that the spare tyre can be installed. Before removing the wheel nuts, make sure your Mazda is firmly in position and that it cannot slip or move.

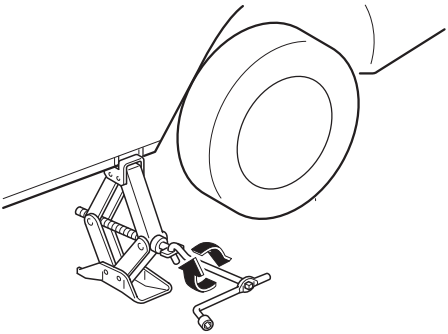

⚠ *WARNING*

Do not jack up the vehicle higher than is necessary:
Jacking up the vehicle higher than is necessary is dangerous as it could destabilize the vehicle resulting in an accident.

Do not start the engine or shake the vehicle while it is jacked up:
Starting the engine or shaking the vehicle while it is jacked up is dangerous as it could cause the vehicle to fall off the jack resulting in an accident.

Never go under the vehicle while it is jacked up:
Going under the vehicle while it is jacked up is dangerous as it could result in death or serious injury if the vehicle were to fall off the jack.

9. Remove the wheel nuts by turning them anticlockwise; then remove the wheel and centre cap.

▼Mounting the Spare Tyre

1. Remove dirt and grime from the mounting surfaces of the wheel and hub, including the hub bolts, with a cloth.

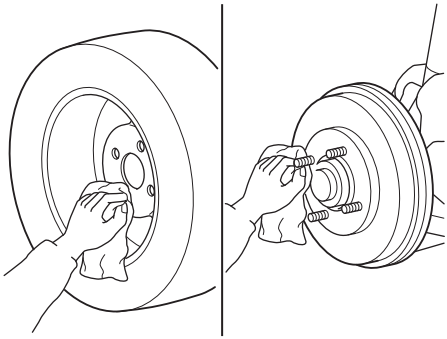

⚠ WARNING

Make sure the mounting surfaces of the wheel, hub and wheel nuts are clean before changing or replacing tyres:
When changing or replacing a tyre, not removing dirt and grime from the mounting surfaces of the wheel, hub and hub bolts is dangerous. The wheel nuts could loosen while driving and cause the tyre to come off, resulting in an accident.

2. Mount the spare tyre.
3. Install the wheel nuts with the bevelled edge inward; tighten them by hand.

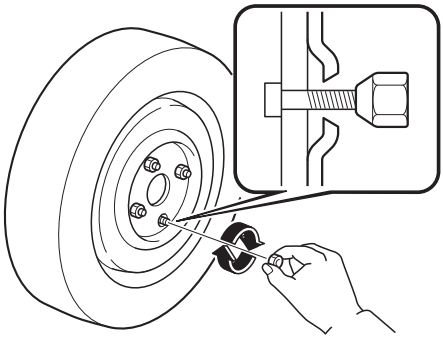

⚠ WARNING

Do not apply oil or grease to wheel nuts and bolts and do not tighten the wheel nuts beyond the recommended tightening torque:
Applying oil or grease to wheel nuts and bolts is dangerous. The wheel nuts could loosen while driving and cause the tyre to come off, resulting in an accident. In addition, wheel nuts and bolts could be damaged if tightened more than necessary.

4. Turn the wheel brace anticlockwise and lower the vehicle. Use the wheel brace to tighten the nuts in the order shown.

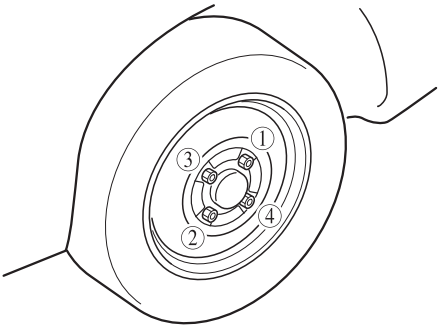

If you are unsure of how tight the nuts should be, have them inspected at an expert repairer, we recommend an Authorised Mazda Repairer.

Nut tightening torque	
N·m (kgf·m, ft·lbf)	108—147 (12—14, 80—108)

⚠ WARNING

Always securely and correctly tighten the wheel nuts:
Improperly or loosely tightened wheel nuts are dangerous. The wheel could wobble or come off. This could result in loss of vehicle control and cause a serious accident.

Be sure to reinstall the same nuts you removed or replace them with metric nuts of the same configuration:
Because the wheel studs and wheel nuts on your Mazda have metric threads, using a non-metric nut is dangerous. On a metric stud, it would not secure the wheel and would damage the stud, which could cause the wheel to slip off and cause an accident.

5. Remove the tyre blocks and store the tools and jack.
6. Store the damaged tyre in the luggage compartment.
7. Check the inflation pressure. Refer to Tyres on page 9-10.
8. Have the flat tyre repaired or replaced as soon as possible.

NOTE

(With tyre pressure monitoring system)
Do not press the tyre pressure monitoring system set switch after installing the spare tyre. The switch is only to be pressed after installing the repaired flat tyre or installing a replacement tyre (page 4-38).

⚠ *WARNING*

Do not drive with any tyres that have incorrect air pressure:
Driving on tyres with incorrect air pressure is dangerous. Tyres with incorrect pressure could affect handling and result in an accident. When you check the regular tyres' air pressure, check the spare tyre, too.

NOTE

To prevent the jack and tool from rattling, store them properly.

Jump-Starting

Jump-starting is dangerous if done incorrectly. So follow the procedure carefully. If you feel unsure about jump-starting, we strongly recommend that you have a competent service technician do the work.

⚠ *WARNING*

Follow These Precautions Carefully:
To ensure safe and correct handling of the battery, read the following precautions carefully before using the battery or inspecting it.

Do not allow the positive (+) terminal to contact any other metal object that could cause sparks:
Flames and sparks near open battery cells are dangerous. Hydrogen gas, produced during normal battery operation, could ignite and cause the battery to explode. An exploding battery can cause serious burns and injuries. When working near a battery, do not allow metal tools to contact the positive (+) or negative (−) terminal of the battery.

Keep all flames, including cigarettes, and sparks away from open battery cells:
Flames and sparks near open battery cells are dangerous. Hydrogen gas, produced during normal battery operation, could ignite and cause the battery to explode. An exploding battery can cause serious burns and injuries.

Do not jump-start a frozen battery or one with a low fluid level:
Jump-starting a frozen battery or one with a low fluid level is dangerous. It may rupture or explode, causing serious injury.

Connect the negative lead to a good ground point away from the battery:

Connecting the end of the second jumper lead to the negative (−) terminal of the discharged battery is dangerous.
A spark could cause the gas around the battery to explode and injure someone.

Route the jumper leads away from parts that will be moving:
Connecting a jumper lead near or to moving parts (cooling fans, belts) is dangerous. The lead could get caught when the engine starts and cause serious injury.

⚠ CAUTION

Use only a 12 V booster system. You can damage a 12 V starter, ignition system, and other electrical parts beyond repair with a 24 V power supply (two 12 V batteries in series or a 24 V motor generator set).

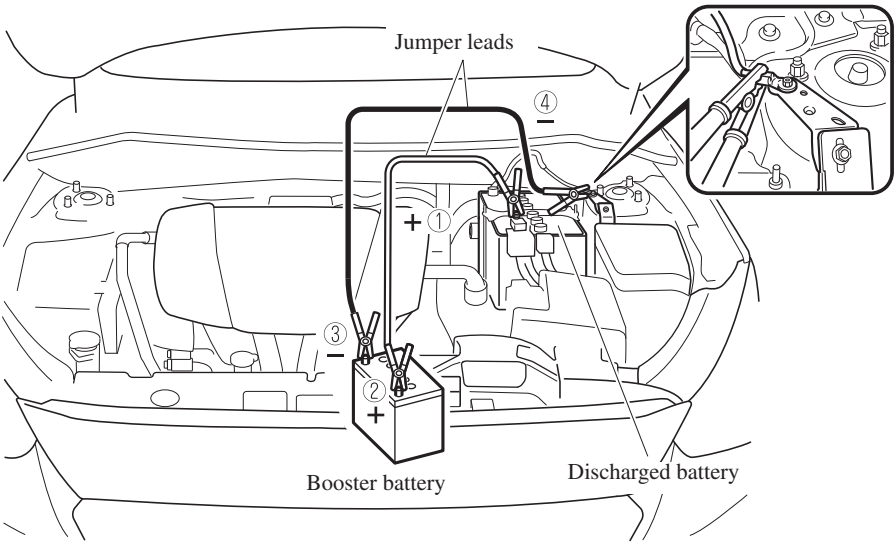

Battery Runs Out

1. Remove the battery cover.

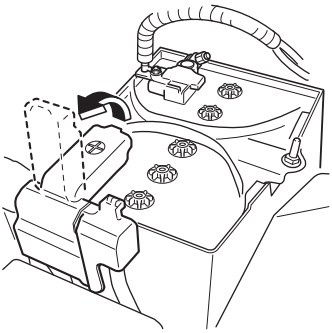

2. Make sure the booster battery is 12 V and that its negative terminal is grounded.
3. If the booster battery is in another vehicle, do not allow both vehicles to touch. Turn off the engine of the vehicle with the booster battery and all unnecessary electrical loads in both vehicles.
4. Connect the jumper leads in the exact sequence as in the illustration.
   - Connect one end of a lead to the positive terminal on the discharged battery (1).
   - Attach the other end to the positive terminal on the booster battery (2).
   - Connect one end of the other lead to the negative terminal of the booster battery (3).
   - Connect the other end to the ground point indicated in the illustration away from the discharged battery (4).
5. Start the engine of the booster vehicle and run it a few minutes. Then start the engine of the other vehicle.
6. When finished, carefully disconnect the leads in the reverse order described in the illustration.
7. If the battery cover has been removed, install it in the reverse order of removal.

NOTE
Verify that the covers are securely installed.

Starting a Flooded Engine (SKYACTIV-G 1.3 and SKYACTIV-G 1.5)

If the engine fails to start, it may be flooded (excessive fuel in the engine).

Follow this procedure:

1. If the engine does not start within five seconds on the first try, wait ten seconds and try again.
2. Make sure the parking brake is on.
3. Depress the accelerator all the way and hold it there.
4. Depress the clutch pedal (Manual transaxle) or the brake pedal (Automatic transaxle), then press the push button start. If the engine starts, release the accelerator immediately because the engine will suddenly rev up.
5. If the engine fails to start, crank it without depressing the accelerator.

If the engine still does not start using the above procedure, have your vehicle inspected by an expert repairer, we recommend an Authorised Mazda Repairer.

Push-Starting

Do not push-start your Mazda.

⚠ *WARNING*

Never tow a vehicle to start it:
Towing a vehicle to start it is dangerous. The vehicle being towed could surge forward when its engine starts, causing the two vehicles to collide. The occupants could be injured.

⚠ CAUTION

Do not push-start a vehicle that has a manual transaxle. It can damage the emission control system.

NOTE

You cannot start a vehicle with an automatic transaxle by pushing it.

Running Out of Fuel (SKYACTIV-D 1.5)

⚠ CAUTION

Do not try starting the engine for more than 30 seconds at a time. Doing so, could damage the starter. If the engine does not start on the first try wait about 10 seconds before trying again.

If your vehicle runs out of fuel, add at least 10 L (2.6 US gal, 2.2 Imp gal) of fuel, and try to restart the engine. Because air can get into fuel lines when a vehicle runs out of fuel, your engine may take longer to start. If the engine does not start the first time, try starting it several more times.
If it still does not start, contact an expert repairer, we recommend an Authorised Mazda Repairer.

Overheating

If the high engine coolant temperature warning light illuminates, the vehicle loses power, or you hear a loud knocking or pinging noise, the engine is probably too hot.

⚠ *WARNING*

Pull over to a safe location, then switch the ignition off and make sure the fan is not running before attempting to work near the cooling fan:
Working near the cooling fan when it is running is dangerous. The fan could continue running indefinitely even if the engine has stopped and the engine compartment temperature is high. You could be hit by the fan and seriously injured.

Do not remove either cooling system cap when the engine and radiator are hot:
When the engine and radiator are hot, scalding coolant and steam may shoot out under pressure and cause serious injury.

Open the bonnet ONLY after steam is no longer escaping from the engine:
Steam from an overheated engine is dangerous. The escaping steam could seriously burn you.

If the high engine coolant temperature warning light illuminates:

1. Drive safely to the side of the road and park off the right-of-way.
2. Put a vehicle with an automatic transaxle in park (P), a manual transaxle in neutral.
3. Apply the parking brake.
4. Turn off the air conditioner.
5. Check whether coolant or steam is escaping from the engine compartment.

   If steam is coming from the engine compartment:
   Do not go near the front of the vehicle.
   Stop the engine.
   Wait until the steam dissipates, then open the bonnet and start the engine.

   If neither coolant nor steam is escaping:
   Open the bonnet and idle the engine until it cools.

⚠ CAUTION

If the cooling fan does not operate while the engine is running, the engine temperature will increase. Stop the engine and call an expert repairer, we recommend an Authorised Mazda Repairer.

6. Make sure the cooling fan is operating, then turn off the engine after the temperature has decreased.
7. When cool, check the coolant level. If it is low, look for coolant leaks from the radiator and hoses.

Overheating

If you find a leak or other damage, or if coolant is still leaking:

Stop the engine and call an expert repairer, we recommend an Authorised Mazda Repairer.

SKYACTIV-G 1.3 and SKYACTIV-G 1.5

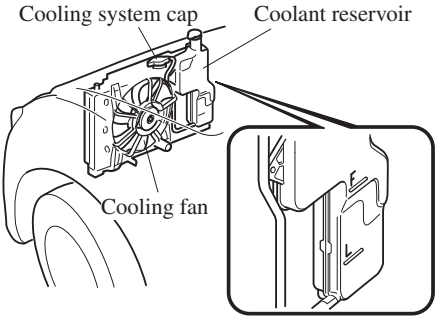

SKYACTIV-D 1.5

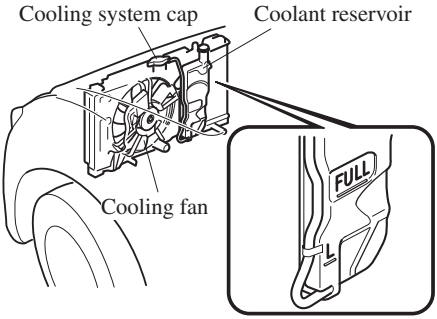

If you find no problems, the engine is cool, and no leaks are obvious:

Carefully add coolant as required (page 6-29).

⚠ CAUTION

If the engine continues to overheat or frequently overheats, have the cooling system inspected. The engine could be seriously damaged unless repairs are made. Consult an expert repairer, we recommend an Authorised Mazda Repairer.

Towing Description

We recommend that towing be done only by an expert repairer, we recommend an Authorised Mazda Repairer or a commercial tow-truck service.

Proper lifting and towing are necessary to prevent damage to the vehicle. Government and local laws must be followed.

A towed vehicle usually should have its drive wheels (front wheels) off the ground. If excessive damage or other conditions prevent this, use wheel dollies.

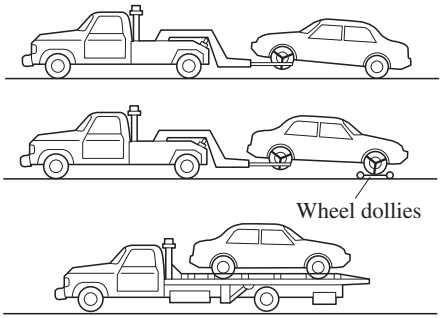

When towing with the rear wheels on the ground, release the parking brake.

⚠ CAUTION

- Do not tow the vehicle pointed backward with driving wheels on the ground. This may cause internal damage to the transaxle.

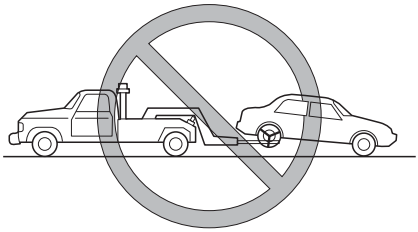

- Do not tow with sling-type equipment. This could damage your vehicle. Use wheel-lift or flatbed equipment.

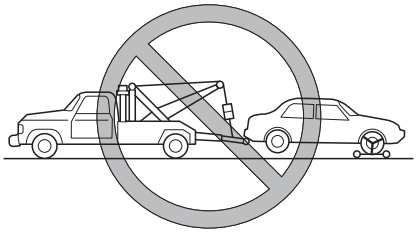

If towing service is not available in an emergency, the vehicle may be towed with all four wheels on the ground using the towing hook at the front of the vehicle. Only tow the vehicle on paved surfaces for short distances at low speeds.

⚠ CAUTION

Follow these instructions when towing the vehicle with all wheels on the ground.

- Shift to neutral (Manual transaxle), or the N position (Automatic transaxle).
- Switch the ignition to ACC.
- Release the parking brake.

Remember that power assist for the brakes and steering will not be available when the engine is not running.

Towing/Tiedown Hooks

⚠ CAUTION

- The towing eyelet should be used in an emergency (to get the vehicle out of a ditch or a snow bank, for example).
- When using the towing eyelets, always pull the lead or chain in a straight direction with respect to the eyelet. Never apply a sideways force.

NOTE

When towing with chain or lead, wrap the chain or lead with a soft cloth near the bumper to prevent damage to the bumper.

▼Towing Hook-Front

1. Remove the towing eyelet and the wheel brace from the luggage compartment (page 7-3).
2. Wrap a jack lever or similar tool with a soft cloth to prevent damage to a painted bumper, and open the cap located on the front bumper.

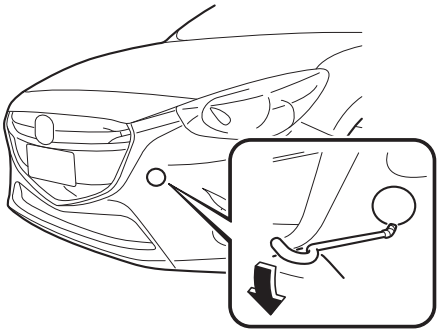

⚠ CAUTION

Do not use excessive force as it may damage the cap or scratch the painted bumper surface.

NOTE

Remove the cap completely and store it so as not to lose it.

3. Securely install the towing eyelet using the wheel brace.

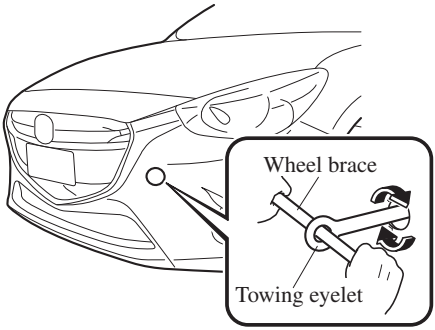

4. Hook the towing rope to the towing eyelet.

⚠ CAUTION

If the towing eyelet is not securely tightened, it may loosen or disengage from the bumper when towing the vehicle. Make sure that the towing eyelet is securely tightened to the bumper.

▼Tiedown Hook-Rear

The hook positioned under the rear bumper on the right side is for tying down the vehicle during transport, and it cannot be used for towing other vehicles.
It can be used as a towing hook only when the vehicle must be towed by another vehicle in an emergency case such as when the vehicle is stuck in snow, however, it may damage the bumper.

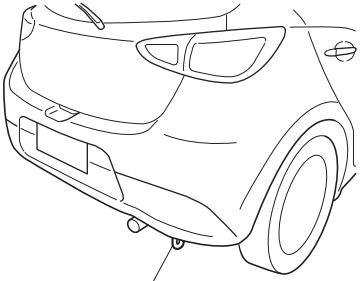

⚠ CAUTION

When using the hook in such emergency cases, observe the following so as not to damage the tiedown hook or the vehicle body.

- The vehicle must be pulled straight to the rear so that no load is applied to the vehicle in the lateral direction.
- The bumper may be damaged if the tie down hook is used as a towing hook.
- When using a metal chain or wire lead, wrap a cloth around the attachment area. If the metal chain or wire lead contacts the bumper directly, the bumper could be scratched or damaged.

If a Warning Light Turns On or Flashes

If any warning light turns on/flashes, take appropriate action for each light. There is no problem if the light turns off, however if the light does not turn off or turns on/flashes again, consult an Authorised Mazda Repairer.

(Vehicles with type C/type D audio)

The warning contents can be verified on the audio.

1. Select the icon on the home screen to display the applications screen.
2. Select the “Warning Guidance”.

▼Stop Vehicle in Safe Place Immediately

If any of the following warning lights turns on, the system may have a malfunction. Stop the vehicle in a safe place immediately and contact an Authorised Mazda Repairer.

Signal	Warning
Brake System Warning Light	This warning has the following functions: **Parking brake warning/Warning light inspection** The light illuminates when the parking brake is applied with the ignition switched to START or ON. It turns off when the parking brake is fully released. **Low brake fluid level warning** If the brake warning light remains illuminated even though the parking brake is released, the brake fluid may be low or there could be a problem with the brake system. Park the vehicle in a safe place immediately and contact an expert repairer, we recommend an Authorised Mazda Repairer. **⚠ *WARNING*** ***Do not drive with the brake system warning light illuminated. Contact an expert repairer, we recommend an Authorised Mazda Repairer to have the brakes inspected as soon as possible:*** ***Driving with the brake system warning light illuminated is dangerous. It indicates that your brakes may not work at all or that they could completely fail at any time. If this light remains illuminated, after checking that the parking brake is fully released, have the brakes inspected immediately.*** **⚠ CAUTION** In addition, the effectiveness of the braking may diminish so you may need to depress the brake pedal more strongly than normal to stop the vehicle.

Warning/Indicator Lights and Warning Sounds

Signal	Warning
Electronic Brake Force Distribution System Warning	If the electronic brake force distribution control unit determines that some components are operating incorrectly, the control unit may illuminate the brake system warning light and the ABS warning light simultaneously. The problem is likely to be the electronic brake force distribution system. **⚠ *WARNING*** ***Do not drive with both the ABS warning light and brake warning light illuminated. Have the vehicle towed to an expert repairer, we recommend an Authorised Mazda Repairer to have the brakes inspected as soon as possible:*** ***Driving when the brake system warning light and ABS warning light are illuminated simultaneously is dangerous.*** ***When both lights are illuminated, the rear wheels could lock more quickly in an emergency stop than under normal circumstances.***
Charging System Warning Light	If the warning light illuminates while driving, it indicates a malfunction of the alternator or of the charging system. Drive to the side of the road and park off the right-of-way. Consult an expert repairer, we recommend an Authorised Mazda Repairer. **⚠ CAUTION** Do not continue driving when the charging system warning light is illuminated because the engine could stop unexpectedly.

Signal	Warning
Engine Oil Warning Light	This warning light indicates low engine oil pressure. **⚠ CAUTION** Do not run the engine if the oil pressure is low. Otherwise, it could result in extensive engine damage. If the light illuminates or the warning indication is displayed while driving: 1.Drive to the side of the road and park off the right-of-way on level ground. 2.Turn off the engine and wait 5 minutes for the oil to drain back into the sump. 3.Inspect the engine oil level 6-28. If it's low, add the appropriate amount of engine oil while being careful not to overfill. **⚠ CAUTION** Do not run the engine if the oil level is low. Otherwise, it could result in extensive engine damage. 4.Start the engine and check the warning light. If the light remains illuminated even though the oil level is normal or after adding oil, stop the engine immediately and have your vehicle towed to an expert repairer, we recommend an Authorised Mazda Repairer.
(Red) High Engine Coolant Temperature Warning Light	The light flashes when the engine coolant temperature is extremely high, and illuminates when the engine coolant temperature increases further. **Handling Procedure** **Flashing light** Drive slowly to reduce engine load until you can find a safe place to stop the vehicle and wait for the engine to cool down. **Illuminated light** This indicates the possibility of overheating. Park the vehicle in a safe place immediately and stop the engine. Refer to Overheating 7-29. **⚠ CAUTION** Do not drive the vehicle with the high engine coolant temperature warning light illuminated. Otherwise, it could result in damage to the engine.

Signal	Warning
Power Steering Malfunction Indicator Light	The light illuminates/flashes if the electric power steering has a malfunction. If the light illuminates/flashes, stop the vehicle in a safe place and do not operate the steering wheel. There is no problem if the light turns off after a while. Contact an expert repairer, we recommend an Authorised Mazda Repairer if the light illuminates/flashes continuously. **NOTE** •If the indicator light illuminates/flashes, the power steering will not operate normally. If this happens, the steering wheel can still be operated, however, the operation may feel heavy compared to normal, or the steering wheel could vibrate when turning. •Repeatedly jerking the steering wheel left and right while the vehicle is stopped or moving extremely slowly will cause the power steering system to go into protective mode which will make the steering feel heavy, but this does not indicate a problem. If this occurs, park the vehicle safely and wait several minutes for the system to return to normal.

▼Contact Authorised Mazda Repairer and Have Vehicle Inspected

If any of the following warning lights turns on/flashes, the system may have a malfunction. Contact an expert repairer, we recommend an Authorised Mazda Repairer to have your vehicle inspected.

Signal	Warning
Master Warning Light	**(Vehicles with type C/type D audio)** The light turns on when the system has a malfunction. Operate the centre display and verify the content. Refer to If a Warning Light Turns On or Flashes on page 7-35. **(Vehicles without type C/type D audio)** The light illuminates continuously if any one of the following occurs. Consult an expert repairer, we recommend an Authorised Mazda Repairer. •There is a malfunction in the battery management system. •There is a malfunction in the brake switch. •**(SKYACTIV-D 1.5)** •There is a malfunction in the engine's hydraulic control. •There is a malfunction in the engine's timing chain. •There is a malfunction in the blow-by heater. •There is a malfunction in the oil level sensor.

Warning/Indicator Lights and Warning Sounds

Signal	Warning
ABS Warning Light	If the ABS warning light stays on while you're driving, the ABS control unit has detected a system malfunction. If this occurs, your brakes will function normally as if the vehicle had no ABS. Should this happen, consult an expert repairer, we recommend an Authorised Mazda Repairer as soon as possible. **NOTE** •When the engine is jump-started to charge the battery, uneven rpm occurs and the ABS warning light may illuminate. If this occurs, it is the result of the weak battery and does not indicate an ABS malfunction. Recharge the battery. •**(With DSC vehicles)** The brake assist system does not operate while the ABS warning light is illuminated.
Check Engine Light	If this light illuminates while driving, the vehicle may have a problem. It is important to note the driving conditions when the light illuminated and consult an expert repairer, we recommend an Authorised Mazda Repairer. The check engine light may illuminate in the following cases: •The engine's electrical system has a problem. •The emission control system has a problem. •**(SKYACTIV-G 1.3, SKYACTIV-G 1.5)** •The fuel tank level being very low or approaching empty. •The fuel-filler cap is missing or not tightened securely. If the check engine light remains on, or it flashes continuously , do not drive at high speeds and consult an expert repairer, we recommend an Authorised Mazda Repairer as soon as possible.
i-stop (Amber) i-stop warning light*	**When the light is turned on** A problem in the system may be indicated under the following conditions. Have your vehicle inspected at an expert repairer, we recommend an Authorised Mazda Repairer. •The light does not turn on when the ignition is switched ON. •The light continues to remain on even though the i-stop OFF switch has been pressed while the engine is running. **When the light is flashing** The light continues to flash if the system has a malfunction. Have your vehicle inspected at an expert repairer, we recommend an Authorised Mazda Repairer.
i-ELOOP (Amber) i-ELOOP Warning Light*	The light turns on if there is any malfunction in the i-ELOOP system. Consult an expert repairer, we recommend an Authorised Mazda Repairer.

*Some models.

Warning/Indicator Lights and Warning Sounds

Signal	Warning
AT Automatic Transaxle Warning Light*	The light illuminates when the transaxle has a problem. **⚠ CAUTION** If the automatic transaxle warning light illuminates, the transaxle has an electrical problem. Continuing to drive your Mazda in this condition could cause damage to your transaxle. Consult an expert repairer, we recommend an Authorised Mazda Repairer as soon as possible.
Air Bag/Seat Belt Pretensioner System Warning Light	A system malfunction is indicated if the warning light constantly flashes, constantly illuminates or does not illuminate at all when the ignition is switched ON. If any of these occur, consult an expert repairer, we recommend an Authorised Mazda Repairer as soon as possible. The system may not operate in an accident. ***⚠ WARNING*** ***Never tamper with the air bag/pretensioner systems and always have an expert repairer, we recommend an Authorised Mazda Repairer perform all servicing and repairs:*** ***Self-servicing or tampering with the systems is dangerous. An air bag/pretensioner could accidentally activate or become disabled causing serious injury or death.***
(Flashing) Tyre Pressure Monitoring System Warning Light*	If the tyre pressure monitoring system has a malfunction, the tyre pressure warning light flashes for about 1 minute when the ignition is switched ON and then continues illuminating. Have your vehicle checked by an expert repairer, we recommend an Authorised Mazda Repairer as soon as possible. ***⚠ WARNING*** ***If the tyre pressure monitoring system warning light illuminates or flashes, or the tyre pressure warning beep sound is heard, decrease vehicle speed immediately and avoid sudden manoeuvring and braking:*** ***If the tyre pressure monitoring system warning light illuminates or flashes, or the tyre pressure warning beep sound is heard, it is dangerous to drive the vehicle at high speeds, or perform sudden manoeuvring or braking. Vehicle drivability could worsen and result in an accident.*** ***To determine if you have a slow leak or a flat, pull over to a safe position where you can check the visual condition of the tyre and determine if you have enough air to proceed to a place where air may be added and the system monitored again by an expert repairer, we recommend an Authorised Mazda Repairer or a tyre repair station.*** ***Do not ignore the TPMS Warning Light:*** ***Ignoring the TPMS warning light is dangerous, even if you know why it is illuminated. Have the problem taken care of as soon as possible before it develops into a more serious situation that could lead to tyre failure and a dangerous accident.***

*Some models.

Signal	Warning
(Red) (Illuminate) KEY Warning Light	If any malfunction occurs in the keyless entry system, it illuminates continuously. **⚠ CAUTION** If the key warning indicator light illuminates or the push button start indicator light (amber) flashes, the engine may not start. If the engine cannot be started, try starting it using the emergency operation for starting the engine, and have the vehicle inspected at an expert repairer, we recommend an Authorised Mazda Repairer as soon as possible. Refer to Emergency Operation for Starting the Engine on page 4-11.
(Illuminate) Lane Departure Warning System (LDWS) Warning Light*	•The warning light remains turned on if there is a problem with the system. Have your vehicle inspected at an expert repairer, we recommend an Authorised Mazda Repairer. •The LDWS does not operate when the warning light illuminates. **⚠ CAUTION** •A problem in the system may be indicated under the following conditions. Have your vehicle inspected at an expert repairer, we recommend an Authorised Mazda Repairer. •When the light remains turned on while driving the vehicle. When the system is cancelled automatically, the light turns on. Normally, the system restores automatically and the light turns off, however, if the light remains turned on, there may be a problem with the system. •The light does not illuminate when the ignition is switched ON. •Always use tyres for all wheels that are of the specified size, and the same manufacture, brand, and tread pattern. In addition, do not use tyres with significantly different wear patterns on the same vehicle. If such improper tyres are used, the LDWS may not operate normally. •When an emergency spare tyre is used, the system may not operate normally.
(Amber) High Beam Control System (HBC) Warning Light*	The light remains turned on if there is a problem with the system. Have your vehicle inspected at an expert repairer, we recommend an Authorised Mazda Repairer. **NOTE** If the windscreen area in front of the Forward Sensing Camera (FSC) is fogged or obstructed, the light turns on temporarily. If the light remains turned on, there may be a problem with the system.
LED Headlight Warning Light*	This light illuminates if there is a malfunction in the LED headlight. Have your vehicle inspected by an expert repairer, we recommend an Authorised Mazda Repairer.

*Some models.

▼Taking Action

Take the appropriate action and verify that the warning light turns off.

Signal	Warning	Action to be taken
Low Fuel Warning Light	The light turns on when the remaining fuel is about 9.0 L (2.3 US gal, 1.9 Imp gal). **NOTE** The light illumination timing may vary because fuel inside the fuel tank moves around according to the driving conditions and the vehicle posture.	Add fuel.
PASS Seat Belt Warning Light (Front seat)	The seat belt warning light turns on if the driver or front passenger's seat is occupied and the seat belt is not fastened with the ignition switched ON. If the driver or front passenger's seat belt is unfastened (only when the front passenger seat is occupied) and the vehicle is driven at a speed faster than about 20 km/h (12 mph), the warning light flashes. After a short time, the warning light stops flashing, but remains illuminated. If a seat belt remains unfastened, the warning light flashes again for a given period of time. **NOTE** •If the driver or front passenger's seat belt is unfastened after the warning light turns on, and the vehicle speed exceeds 20 km/h (12 mph), the warning light flashes again. •Placing heavy items on the front passenger's seat may cause the front passenger's seat belt warning function to operate depending on the weight of the item. •To allow the front passenger's seat weight sensor to function properly, do not place and sit on an additional seat cushion on the front passenger's seat. The sensor may not function properly because the additional seat cushion could cause sensor interference. •If a small child is seated on the front passenger's seat, the warning light may not operate.	Fasten the seat belts.

Signal	Warning	Action to be taken
REAR (Red) Seat Belt Warning Light (Rear seat)*	If the rear seat belts are not fastened while the ignition is switched ON , the driver and the passenger are alerted by the warning light. The warning light operates even if there is no passenger on the rear seat. **NOTE** If a rear seat belt is not fastened by a certain period of time after the engine has been started, the warning light turns off.	Fasten the seat belts.
Door-Ajar Warning Light	The light turns on if any door is not closed securely.	Close the door securely.
120 km/h 120km/h Warning Light*	The 120 km/h warning light illuminates when the vehicle speed exceeds 120 km/h.	Lower the vehicle speed.
Low Washer Fluid Level Warning Light*	This warning light indicates that little washer fluid remains.	Add washer fluid (page 6-32).

*Some models.

Warning/Indicator Lights and Warning Sounds

Signal	Warning	Action to be taken
(Illuminate) Tyre Pressure Monitoring System Warning Light*	When the warning light illuminates, and the warning beep sound is heard (about 3 seconds), tyre pressure is too low in one or more tyres. **⚠ *WARNING*** ***<u>If the tyre pressure monitoring system warning light illuminates or flashes, or the tyre pressure warning beep sound is heard, decrease vehicle speed immediately and avoid sudden manoeuvring and braking:</u>*** ***If the tyre pressure monitoring system warning light illuminates or flashes, or the tyre pressure warning beep sound is heard, it is dangerous to drive the vehicle at high speeds, or perform sudden manoeuvring or braking. Vehicle drivability could worsen and result in an accident.*** ***To determine if you have a slow leak or a flat, pull over to a safe position where you can check the visual condition of the tyre and determine if you have enough air to proceed to a place where air may be added and the system monitored again by an expert repairer, we recommend an Authorised Mazda Repairer or a tyre repair station.*** ***<u>Do not ignore the TPMS Warning Light:</u>*** ***Ignoring the TPMS warning light is dangerous, even if you know why it is illuminated. Have the problem taken care of as soon as possible before it develops into a more serious situation that could lead to tyre failure and a dangerous accident.***	Inspect the tyres and adjust to the specified inflation pressure (page 6-44). **NOTE** •Perform tyre pressure adjustment when the tyres are cold. Tyre pressure will vary according to the tyre temperature, therefore let the vehicle stand for 1 hour or only drive it 1.6 km (1 mile) or less before adjusting the tyre pressures. When pressure is adjusted on hot tyres to the cold inflation pressure, the TPMS warning light/beep may turn on after the tyres cool and pressure drops below specification. Also, an illuminated TPMS warning light, resulting from the tyre air pressure dropping due to cold ambient temperature will remain illuminated even if the ambient temperature rises. In this case, it will also be necessary to adjust the tyre air pressures. If the TPMS warning light illuminates due to a drop in tyre air pressure, make sure to check and adjust the tyre air pressures. •Tyres lose air naturally over time and the TPMS cannot tell if the tyres are getting too soft over time or you have a flat. However, when you find one low tyre in a set of four-that is an indication of trouble; you should have someone drive the vehicle slowly forward so you can inspect any low tyre for cuts and any metal objects sticking through tread or sidewall. Put a few drops of water in the valve stem to see if it bubbles indicating a bad valve. Leaks need to be addressed by more than simply reinflating the tyre as leaks are dangerous — take it to an expert repairer, we recommend an Authorised Mazda Repairer.

*Some models.

Signal	Warning	Action to be taken
(Amber) Smart City Brake Support (SCBS) Warning Light*	The light turns on if the windscreen is dirty or there is a malfunction in the system.	**(Vehicles with type C/type D audio)** Verify the reason why the warning light is illuminated on the centre display (page 7-35). If the reason why the warning light is illuminated is due to a dirty windscreen, clean the windscreen. For any other reasons, have the vehicle inspected at an expert repairer, we recommend an Authorised Mazda Repairer. **(Vehicles without type C/type D audio)** If the reason why the warning light is illuminated is due to a dirty windscreen, clean the windscreen. For any other reasons, have the vehicle inspected at an expert repairer, we recommend an Authorised Mazda Repairer.

KEY Warning Light

Take the appropriate action and verify that the warning light turns off.

Signal	Cause	Action to be taken
(Red) (Flashing)	The advanced key battery is dead.	Replace the key battery (page 6-41).
	The advanced key is not within the operation range.	Bring the advanced key into the operation range (page 3-7).
	The advanced key is placed in areas inside the cabin where it is difficult for the key to be detected.	
	A key from another manufacturer similar to the advanced key is in the operation range.	Take the key from another manufacturer similar to the advanced key out of the operation range.
	Without the ignition switched off, the advanced key is taken out of the cabin, and then all the doors are closed.	Bring the advanced key back into the cabin.

*Some models.

Message Indicated on Display*

If a message is displayed in the centre display (Type C/Type D audio), take appropriate action (in a calm manner) according to the displayed message.

(Display example)

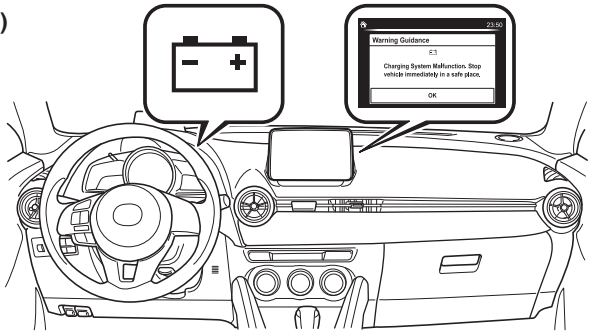

▼Stop Vehicle in Safe Place Immediately

If the following messages are displayed in the centre display (Type C/Type D audio), a vehicle system may be malfunctioning. Stop the vehicle in a safe place and contact an Authorised Mazda Repairer.

Display	Indicated Condition
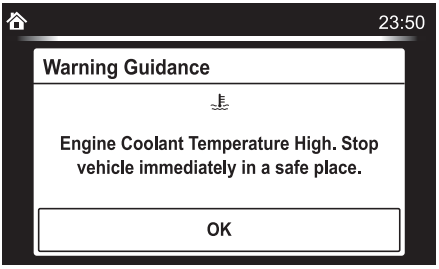	Displays if the engine coolant temperature has increased excessively.
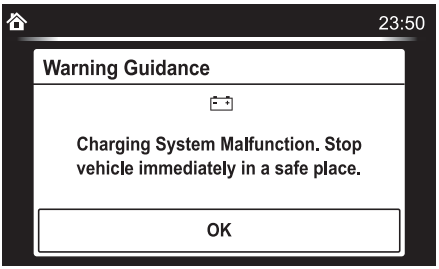	Displays if the charging system has a malfunction.

*Some models.

▼Verify Display Content

Displays in the following cases:

Display	Indicated Condition/Action to be taken
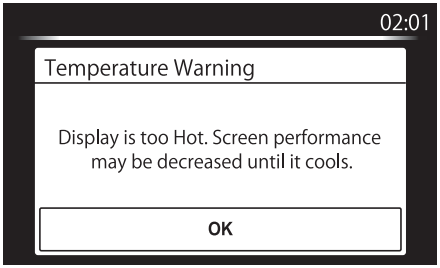	The following message is displayed when the temperature around the centre display is high. Lowering the temperature in the cabin or the temperature around the centre display by avoiding direct sunlight is recommended.

Warning Sound is Activated

▼Lights-On Reminder

If lights are on and the ignition is switched to ACC or the ignition is switched off, a continuous beep sound will be heard when the driver's door is opened.

NOTE

- When the ignition is switched to ACC, the “Ignition Not Switched Off (STOP) Warning Beep” (page 7-49) overrides the lights-on reminder.
- A personalised function is available to change the sound volume for the lights-on reminder.
  Refer to Personalisation Features on page 9-13.

▼Air Bag/Seat Belt Pretensioner System Warning Beep

If there is a problem with the air bag/seat belt pretensioner systems and the warning light illumination, a warning beep sound will be heard for about 5 seconds every minute.

The air bag and seat belt pretensioner system warning beep sound will continue to be heard for approximately 35 minutes. Have your vehicle inspected at an expert repairer, we recommend an Authorised Mazda Repairer as soon as possible.

⚠ *WARNING*

Do not drive the vehicle with the air bag/seat belt pretensioner system warning beep sounding:
Driving the vehicle with the air bag/seat belt pretensioner system warning beep sounding is dangerous. In a collision, the air bags and the seat belt pretensioner system will not deploy and this could result in death or serious injury. Contact an expert repairer, we recommend an Authorised Mazda Repairer to have the vehicle inspected as soon as possible.

▼Seat Belt Warning Beep

Front seat

If the vehicle speed exceeds about 20 km/h (12 mph) with the driver or front passenger's seat belt unfastened, a warning beep sounds continuously. If the seat belt remains unfastened, the beep sound stops once and then continues for about 90 seconds. The beep stops after the driver or front passenger's seat belt is fastened.

NOTE

- Placing heavy items on the front passenger seat may cause the front passenger seat belt warning function to operate depending on the weight of the item.
- To allow the front passenger seat weight sensor to function properly, do not place and sit on an additional seat cushion on the front passenger seat. The sensor may not function properly because the additional seat cushion could cause sensor interference.
- When a small child sits on the front passenger seat, it is possible that the warning beep will not operate.

Rear seat*

The warning beep only sounds if a seat belt is unfastened after being fastened.

▼Ignition Not Switched Off (STOP) Warning Beep

If the driver's door is opened with the ignition switched to ACC, a beep will be heard continuously in the cabin to notify the driver that the ignition has not been switched OFF (STOP). Under this condition, the keyless entry system will not operate, the vehicle cannot be locked, and the battery voltage will be depleted.

▼Key Removed from Vehicle Warning Beep

Vehicles with advanced keyless function

If the key is taken out of the vehicle while the ignition is not switched OFF and all the doors are closed, the beep which sounds outside of the vehicle will be heard 6 times, the beep which sounds inside the vehicle will be heard 6 times, and the KEY warning light (red) in the instrument cluster flashes continuously to notify the driver that the ignition has not been switched OFF.

Vehicles without advanced keyless function

If the key is taken out of the vehicle while the ignition is not switched OFF and all the doors are closed, a beep will be heard in the cabin 6 times and the KEY warning light (red) in the instrument cluster turns on continuously to notify the driver that the ignition has not been switched OFF.

NOTE

Because the key utilizes low-intensity radio waves, the Key Removed From Vehicle Warning may activate if the key is carried together with a metal object or it is placed in a poor signal reception area.

*Some models.

▼Request Switch Inoperable Warning Beep (With the advanced keyless function)

If the request switch is pressed with the door open or ajar, or the ignition is not switched OFF with a key being carried, a beep will be heard outside for about 2 seconds to notify the driver that the door or liftgate/boot lid cannot be locked.

▼Key Left-in-luggage Compartment/ Boot Warning Beep (With the advanced keyless function)

If the key is left in the luggage compartment/boot with all the doors locked and the liftgate/boot lid closed, a beep will be heard outside for about 10 seconds to notify the driver that the key is in the luggage compartment/boot. In this case, take out the key by pressing the electric liftgate/boot lid opener and opening the liftgate/boot lid. The key taken out of the luggage compartment/ boot may not operate because its functions have been temporarily stopped. To restore the key's functions, perform the applicable procedure (page 3-7).

▼Key Left-in-vehicle Warning Beep (With the advanced keyless function)

If all the doors and luggage compartment/ boot are locked using another key while the key is left in the cabin, the beep which sounds outside of the vehicle will be heard for about 10 seconds to notify the driver that the key is in the cabin. In this case, take out the key by opening the door. A key taken out of the vehicle using this method may not operate because its functions have been temporarily stopped. To restore the key's functions, perform the applicable procedure (page 3-7).

▼i-stop Warning Beep*

- If the driver's door is opened while engine idling is stopped, the warning sound operates to notify the driver that engine idling is stopped. It stops when the driver's door is closed.
- The warning sound operates if the following operations are performed while the engine idling is stopped. In such cases, the engine does not restart automatically to ensure safety. Start the engine using the normal method.
  - **(European model)**
    The driver's seat belt is unfastened and the driver's door is opened.
  - **(Except European model)**
    - **(Manual transaxle)**
      With the shift lever in a position other than neutral, the driver's seat belt is unfastened and the driver's door is opened.
    - **(Automatic transaxle)**
      With the selector lever in the D or M (not in second gear fixed mode) position, the driver's seat belt is unfastened and the driver's door is opened.

▼Vehicle Speed Alarm*

The vehicle speed alarm function is designed to alarm the driver via a single beep sound and a warning indication in the instrument cluster that the previously set vehicle speed has been exceeded.
You can change the vehicle speed setting at which the warning is triggered (page 4-33).

*Some models.

▼Tyre Inflation Pressure Warning Beep*

The warning beep sound will be heard for about 3 seconds when there is any abnormality in tyre inflation pressures (page 4-143).

▼Outside Temperature Warning Beep

Warns the driver of the possibility of icy roads when the outside temperature is low. If the outside temperature is lower than about 4 °C (39 °F) , a beep sound is heard once and the outside temperature display flashes for about ten seconds. (page 4-33)

▼Lane Departure Warning System (LDWS) Warning Sound*

While the system is operating, if the system determines that the vehicle may depart from the lane, it sounds a warning sound.

NOTE

- The volume of the LDWS warning sound can be changed.
  Refer to Personalisation Features on page 9-13.
- The type of the LDWS warning sound can be changed.
  Refer to Personalisation Features on page 9-13.

▼Blind Spot Monitoring (BSM) System Warning Beep*

Driving forward

The warning beep operates when the direction indicator lever is operated to the side where the Blind Spot Monitoring (BSM) warning light is illuminated.

NOTE

A personalised function is available to change the Blind Spot Monitoring (BSM) warning beep sound volume. Refer to Personalisation Features on page 9-13.

Reversing

If a moving object such as a vehicle or two-wheeled vehicle approaches on the left or right from behind your vehicle, the Blind Spot Monitoring (BSM) warning sound is activated.

▼Electronic Steering Lock Warning Beep

The warning beep operates if the steering wheel is not unlocked after the push button start is pressed. (page 4-4)

▼Speed Limiter Warning Beep*

If the vehicle speed exceeds the set speed by about 3 km/h (2 mph) or more, a warning beep operates continuously. The warning beep operates until the vehicle speed decreases to the set speed or less.

▼Collision Warning*

If there is the possibility of a collision with a vehicle ahead, the beep sounds continuously and a warning is indicated in the display.

*Some models.

▼120 km/h Warning Beep*

If the vehicle speed exceeds 120 km/h, a chime sounds for 5 seconds.

▼Power Steering Warning Buzzer

If the power steering system has a malfunction, the power steering malfunction light turns on or flashes and the buzzer operates at the same time. Refer to Warning Lights on page 4-39.

▼Over Rev. Buzzer*

The buzzer sounds to notify the driver if the engine speed is about to exceed the permissible engine speed.

⚠ CAUTION

Operate the accelerator and shift gears according to the driving conditions so that the buzzer does not sound. If the engine speed exceeds the permissible engine speed, the engine could be damaged.

*Some models.

When Liftgate/Boot Lid Cannot be Opened

If the vehicle battery is dead or there is a malfunction in the electrical system and the liftgate/boot lid cannot be opened, perform the following procedure as an emergency measure to open it:

(Hatchback)

⚠ CAUTION

- Perform the procedure using a cloth to cover sharp edges which could injure your hands.
- Perform the procedure carefully when using a flathead screwdriver as it could cause damage to the surrounding area or vehicle parts.

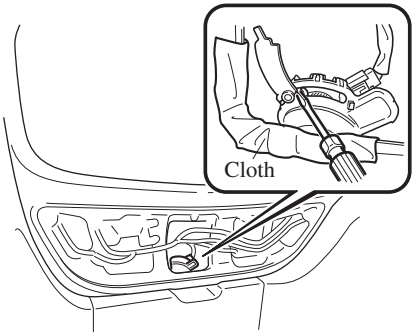

1. Fold down the rear seatbacks.
   Refer to Split/One-piece Folding the Seatback on page 2-7.

2. Pull the centre section of the plastic fastener and remove the fasteners, then remove cover on the interior surface of the liftgate.

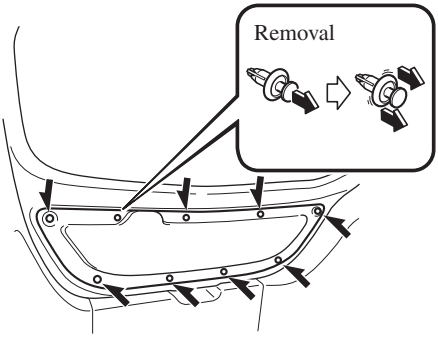

3. Using a flathead screwdriver, open the inner cover.

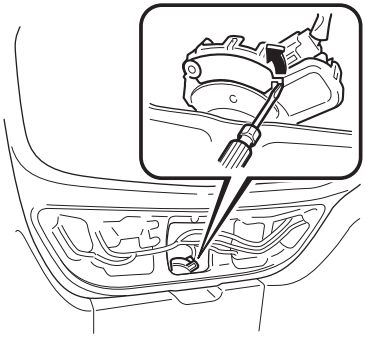

4. Using a flathead screwdriver, turn the lever to the right to unlock the liftgate.

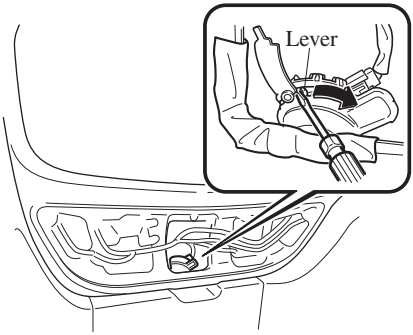

When Liftgate/Boot Lid Cannot be Opened

(Saloon)

1. Open the cover.
2. Move the lever to the left to fold the seatback.

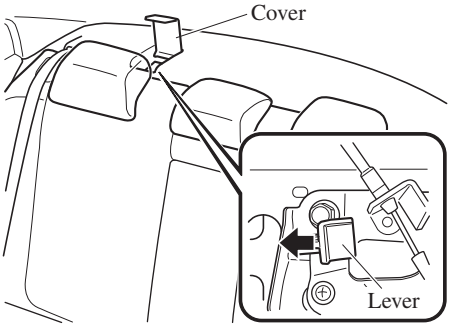

3. Move the lever to the left to open the boot lid.

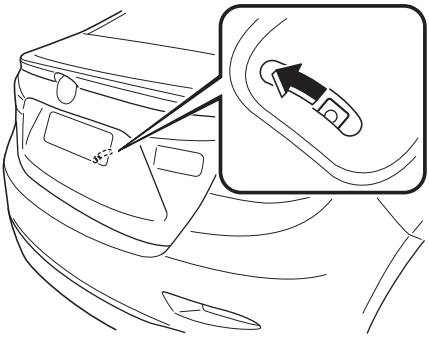

After performing this emergency measure, have the vehicle inspected at an expert repairer, we recommend an Authorised Mazda Repairer as soon as possible.

If the Active Driving Display does not operate

If the active driving display does not operate, switch the ignition off and then restart the engine. If the active driving display does not operate even with the engine restarted, have the vehicle inspected at an expert repairer, we recommend an Authorised Mazda Repairer.

MEMO

8 Customer Information

Important consumer information including warranties and add-on equipment.

Warranty **8-2**
Registering Your Vehicle in A Foreign Country 8-2
Add-On Non-Genuine Parts and Accessories 8-3

Cell Phones **8-4**
Cell Phones Warning 8-4

Recording of Vehicle Data **8-5**
Recording of Vehicle Data 8-5

Declaration of Conformity **8-6**
Declaration of Conformity 8-6

Electromagnetic Compatibility **8-18**
Electromagnetic Compatibility 8-18

Collection/Disposal of Old Equipment/Used Battery **8-20**
Information for Users on Collection and Disposal of Old Equipment and Used Batteries 8-20

Registering Your Vehicle in A Foreign Country

Registering your vehicle in a foreign country may be problematic depending on whether it meets the specific emission and safety standards of the country in which the vehicle will be driven. Consequently, your vehicle may require modifications at personal expense in order to meet the regulations.
In addition, you should be aware of the following issues:
Satisfactory vehicle servicing may be difficult or impossible in another country.

The fuel specified for your vehicle may be unavailable.

Parts, servicing techniques, and tools necessary to maintain and repair your vehicle may be unavailable.

There might not be an Authorised Mazda Dealer in the country you plan to take your vehicle.

The Mazda warranty is valid only in certain countries.

Add-On Non-Genuine Parts and Accessories

Please note that technical alterations to the original state of your Mazda vehicle can affect the safety of the vehicle. Such technical alterations include not only the use of unsuitable spare parts, but also accessories, fittings or attachments, including rims and tyres.

Genuine Mazda Parts and Genuine Mazda Accessories have been specifically designed for Mazda vehicles.
Other parts and accessories than those mentioned above have not been examined and approved by Mazda unless explicitly stated by Mazda. We cannot certify the suitability of such products. Mazda is not liable for any damage caused by the use of such products.

⚠ *WARNING*

Be very careful in choosing and installing add-on electrical equipment, such as mobile telephones, two-way radios, stereo systems, and car alarm systems:
Incorrectly choosing or installing improper add-on equipment or choosing an improper installer is dangerous. Essential systems could be damaged, causing engine stalling, air-bag (SRS) activation, ABS/TCS/DSC inactivation, or a fire in the vehicle.

Mazda assumes no responsibility for death, injury, or expenses that may result from the installation of add-on non-genuine parts or accessories.

Cell Phones Warning

⚠ *WARNING*

Please comply with the legal regulations concerning the use of communication equipment in vehicles in your country:
Use of any electrical devices such as cell phones, computers, portable radios, vehicle navigation or other devices by the driver while the vehicle is moving is dangerous. Dialing a number on a cell phone while driving also ties-up the driver's hands. Use of these devices will cause the driver to be distracted and could lead to a serious accident. If a passenger is unable to use the device, pull off the right-of-way to a safe area before use. If use of a cell phone is necessary despite this warning, use a hands-free system to at least leave the hands free to drive the vehicle. Never use a cell phone or other electrical devices while the vehicle is moving and, instead, concentrate on the full-time job of driving.

Recording of Vehicle Data

This vehicle is equipped with a computer which records the following main vehicle data related to vehicle controls, operation, and other driving conditions.

Recorded data

- Vehicle conditions such as engine speed and vehicle speed
- Driving operation conditions such as accelerator and brake pedals, and information related to the environmental circumstances while the vehicle is driven
- Malfunction diagnosis information from each on-vehicle computer
- Information related to controls of other on-vehicle computers

NOTE
The recorded data may vary depending on the vehicle grade and optional equipment. Voice and images are not recorded.

Data handling

Mazda and its subcontracting parties may obtain and use the recorded data for vehicle malfunction diagnosis, research and development, and quality improvement.
Mazda will not disclose or provide any of the obtained data to a third party unless:

- An agreement from the vehicle owner (agreements from lessor and lessee for leased vehicle) is obtained
- Officially requested by the police or other law enforcement authorities
- For statistical processing by a research institution after processing the data so that identification of the owner or the vehicle is impossible

Declaration of Conformity

▼Keyless Entry System/Immobilizer System

MITSUBISHI ELECTRIC
Changes for the Better

MITSUBISHI ELECTRIC CORPORATION
HIMEJI WORKS

DECLARATION of CONFORMITY

We, MITSUBISHI ELECTRIC CORPORATION, HIMEJI WORKS,
840, Chiyoda-machi, Himeji, Hyogo 670-8677, Japan

declare under our sole responsibility that the products

Product : Keyless System

Model/Type : SKE133-02, SKE133-02(Type: X1T838),
SKE134-01, SKE134-01(Type: X1T861),
SKE136-01, SKE136-01(Type: X1T850), SKE13E-01

to which this declaration relates are in conformity with the essential requirements and other relevant requirements of the R&TTE Directive (1999/5/EC).
The product is in conformity with the following standards:

	SKE133-02, SKE133-02 (Type:X1T838) (EEE)	SKE134-01, SKE134-01 (Type:X1T861) (UTE)	SKE136-01 SKE136-01 (Type:X1T850) (Receiver)	SKE13E-01 (Hand Unit)
Radio	EN 300 330-1 V1.7.1: 2010-02 EN 300 330-2 V1.5.1: 2010-02	EN 300 220-1 V2.4.1: 2012-05 EN 300 220-2 V2.4.1: 2012-05	EN 300 330-1 V1.7.1: 2010-02 EN 300 330-2 V1.5.1: 2010-02 EN 300 220-1 V2.4.1: 2012-05 EN 300 220-2 V2.4.1: 2012-05	
EMC	EN 301 489-1 V1.9.2: 2011-09 EN 301 489-3 V1.4.1: 2002-08			
Safety	EN 60950: 2002+Amd.1: 2004+Amd.11: 2009+Amd.2:2010+Amd.12:2011			

CE

Date : July 1, 2014

Signature :

Name : Toshio Koga

Title : Manager
Body Control Units Design Section 1
Electronic Products Dept. A

English	Hereby, MITSUBISHI ELECTRIC CORPORATION, HIMEJI WORKS, declares that this **Keyless System** (SKE133-02, SKE133-02(X1T838), SKE134-01, SKE134-01(X1T861), SKE136-01, SKE136-01(X1T850), SKE13E-01) is in compliance with the essential requirements and other relevant provisions of Directive 1999/5/EC.
Finnish	MITSUBISHI ELECTRIC CORPORATION, HIMEJI WORKS vakuuttaa tämän yllä **Keyless System** (SKE133-02, SKE133-02(X1T838), SKE134-01, SKE134-01(X1T861), SKE136-01, SKE136-01(X1T850), SKE13E-01) tyyppinen laite on direktiivin 1999/5/EY olennaisten vaatimusten ja sitä koskevien direktiivin muiden ehtojen mukainen.
Spanish	Por medio de la presente MITSUBISHI ELECTRIC CORPORATION, HIMEJI WORKS declara que el **Keyless System** (SKE133-02, SKE133-02(X1T838), SKE134-01, SKE134-01(X1T861), SKE136-01, SKE136-01(X1T850), SKE13E-01) cumple con los requisitos esenciales y cualesquiera otras disposiciones aplicables o exigibles de la Directiva 1999/5/CE
Dutch	Hierbij verklaart MITSUBISHI ELECTRIC CORPORATION, HIMEJI WORKS dat het toestel **Keyless System** (SKE133-02, SKE133-02(X1T838), SKE134-01, SKE134-01(X1T861), SKE136-01, SKE136-01(X1T850), SKE13E-01) in overeenstemming is met de essentiële eisen en de andere relevante bepalingen van richtlijn 1999/5/EG.
	Bij deze verklaart MITSUBISHI ELECTRIC CORPORATION, HIMEJI WORKS dat deze **Keyless System** (SKE133-02, SKE133-02(X1T838), SKE134-01, SKE134-01(X1T861), SKE136-01, SKE136-01(X1T850), SKE13E-01) voldoet aan de essentiële eisen en aan de overige relevante bepalingen van Richtlijn 1999/5/EC.
French	Par la présente MITSUBISHI ELECTRIC CORPORATION, HIMEJI WORKS déclare que l'appareil **Keyless System** (SKE133-02, SKE133-02(X1T838), SKE134-01, SKE134-01(X1T861), SKE136-01, SKE136-01(X1T850), SKE13E-01) est conforme aux exigences essentielles et aux autres dispositions pertinentes de la directive 1999/5/CE
	Par la présente, MITSUBISHI ELECTRIC CORPORATION, HIMEJI WORKS déclare que ce **Keyless System** (SKE133-02, SKE133-02(X1T838), SKE134-01, SKE134-01(X1T861), SKE136-01, SKE136-01(X1T850), SKE13E-01) est conforme aux exigences essentielles et aux autres dispositions de la directive 1999/5/CE qui lui sont applicables
Danish	Undertegnede MITSUBISHI ELECTRIC CORPORATION, HIMEJI WORKS erklærer herved, at følgende udstyr **Keyless System** (SKE133-02, SKE133-02(X1T838), SKE134-01, SKE134-01(X1T861), SKE136-01, SKE136-01(X1T850), SKE13E-01) overholder de væsentlige krav og øvrige relevante krav i direktiv 1999/5/EF.
Czech	MITSUBISHI ELECTRIC CORPORATION, HIMEJI WORKS tímto prohlašuje, že **Keyless System** (SKE133-02, SKE133-02(X1T838), SKE134-01, SKE134-01(X1T861), SKE136-01, SKE136-01(X1T850), SKE13E-01) splňuje základní požadavky a všechna příslušná ustanovení Směrnice 1999/5/ES.
Polish	Niniejszym MITSUBISHI ELECTRIC CORPORATION, HIMEJI WORKS deklaruje że **Keyless System** (SKE133-02, SKE133-02(X1T838), SKE134-01, SKE134-01(X1T861), SKE136-01, SKE136-01(X1T850), SKE13E-01) jest zgodny z zasadniczymi wymaganiami i innymi właściwymi postanowieniami Dyrektywy 1999/5/EC.
Estonian	Käesolevaga kinnitab MITSUBISHI ELECTRIC CORPORATION, HIMEJI WORKS seadme **Keyless System** (SKE133-02, SKE133-02(X1T838), SKE134-01, SKE134-01(X1T861), SKE136-01, SKE136-01(X1T850), SKE13E-01) vastavust direktiivi 1999/5/EÜ põhinõuetele ja nimetatud direktiivist tulenevatele teistele asjakohastele sätetele
Maltese	Hiwwhekk, MITSUBISHI ELECTRIC CORPORATION, HIMEJI WORKS , jiddikjara li dan **Keyless System** ((SKE133-02, SKE133-02(X1T838), SKE134-01, SKE134-01(X1T861), SKE136-01, SKE136-01(X1T850), SKE13E-01) jikkonforma mal-ħtiġijiet essenzjali u ma provvedimenti ohrajn relevanti li hemm fid-Direttiva 1999/5/EC.
Latvian	Ar šo MITSUBISHI ELECTRIC CORPORATION, HIMEJI WORKS deklarē, ka **Keyless System** (SKE133-02, SKE133-02(X1T838), SKE134-01, SKE134-01(X1T861), SKE136-01, SKE136-01(X1T850), SKE13E-01) atbilst Direktīvas 1999/5/EK būtiskajām prasībām un citiem ar to saistītajiem noteikumiem.
Lithuania	Šiuo MITSUBISHI ELECTRIC CORPORATION, HIMEJI WORKS deklaruoja, kad šis **Keyless System** (SKE133-02, SKE133-02(X1T838), SKE134-01, SKE134-01(X1T861), SKE136-01, SKE136-01(X1T850), SKE13E-01) atitinka esminius reikalavimus ir kitas 1999/5/EB Direktyvos nuostatas.
Hungarian	A MITSUBISHI ELECTRIC CORPORATION, HIMEJI WORKS ezennel kijelenti, hogy a **Keyless System** (SKE133-02, SKE133-02(X1T838), SKE134-01, SKE134-01(X1T861), SKE136-01, SKE136-01(X1T850), SKE13E-01) típusú berendezés teljesíti az alapvető követelményeket és más 1999/5/EK irányelvben meghatározott vonatkozó rendelkezéseket.
Italian	Con la presente MITSUBISHI ELECTRIC CORPORATION, HIMEJI WORKS dichiara che questo **Keyless System** (SKE133-02, SKE133-02(X1T838), SKE134-01, SKE134-01(X1T861), SKE136-01, SKE136-01(X1T850), SKE13E-01) è conforme ai requisiti essenziali ed alle altre disposizioni pertinenti stabilite dalla direttiva 1999/5/CE
Slovenian	MITSUBISHI ELECTRIC CORPORATION, HIMEJI WORKS izjavlja, da je ta **Keyless System** (SKE133-02, SKE133-02(X1T838), SKE134-01, SKE134-01(X1T861), SKE136-01, SKE136-01(X1T850), SKE13E-01) v skladu z bistvenimi zahtevami in drugimi relevantnimi določili direktive 1999/5/ES.	
Slovakian	MITSUBISHI ELECTRIC CORPORATION, HIMEJI WORKS týmto vyhlasuje, že **Keyless System** (SKE133-02, SKE133-02(X1T838), SKE134-01, SKE134-01(X1T861), SKE136-01, SKE136-01(X1T850), SKE13E-01) spĺňa základné požiadavky a všetky príslušné ustanovenia Smernice 1999/5/ES.
German	Hiermit erklärt MITSUBISHI ELECTRIC CORPORATION, HIMEJI WORKS , dass sich das Gerät **Keyless System** (SKE133-02, SKE133-02(X1T838), SKE134-01, SKE134-01(X1T861), SKE136-01, SKE136-01(X1T850), SKE13E-01) in Übereinstimmung mit den grundlegenden Anforderungen und den anderen relevanten Vorschriften der Richtlinie 1999/5/EG befindet". (BMWi)	Härmed intygar MITSUBISHI ELECTRIC CORPORATION, HIMEJI WORKS att denna **Keyless System** (SKE133-02, SKE133-02(X1T838), SKE134-01, SKE134-01(X1T861), SKE136-01, SKE136-01(X1T850), SKE13E-01) står i överensstämmelse med de väsentliga egenskapskrav och övriga relevanta bestämmelser som framgår av direktiv 1999/5/EG.
	Hiermit erklärt MITSUBISHI ELECTRIC CORPORATION, HIMEJI WORKS die Übereinstimmung des Gerätes **Keyless System** (SKE133-02, SKE133-02(X1T838), SKE134-01, SKE134-01(X1T861), SKE136-01, SKE136-01(X1T850), SKE13E-01) mit den grundlegenden Anforderungen und den anderen relevanten Festlegungen der Richtlinie 1999/5/EG. (Wien)	ΜΕ ΤΗΝ ΠΑΡΟΥΣΑ MITSUBISHI ELECTRIC CORPORATION, HIMEJI WORKS ΔΗΛΩΝΕΙ ΟΤΙ **Keyless System** (SKE133-02, SKE133-02(X1T838), SKE134-01, SKE134-01(X1T861), SKE136-01, SKE136-01(X1T850), SKE13E-01) ΣΥΜΜΟΡΦΩΝΕΤΑΙ ΠΡΟΣ ΤΙΣ ΟΥΣΙΩΔΕΙΣ ΑΠΑΙΤΗΣΕΙΣ ΚΑΙ ΤΙΣ ΛΟΙΠΕΣ ΣΧΕΤΙΚΕΣ ΔΙΑΤΑΞΕΙΣ ΤΗΣ ΟΔΗΓΙΑΣ 1999/5/ΕΚ.

Bulgarian	С настоящото, **MITSUBISHI ELECTRIC CORPORATION, HIMEJI WORKS** декларира, че **Keyless System (SKE133-02, SKE133-02(X1T838), SKE134-01, SKE134-01(X1T861), SKE136-01, SKE136-01(X1T850), SKE13E-01)** е в съответствие със съществените изисквания и другите приложими разпоредби на Директива 1999/5/ЕС.	Rumanian	Prin prezenta, **MITSUBISHI ELECTRIC CORPORATION, HIMEJI WORKS** declară că aparatul **Keyless System (SKE133-02, SKE133-02(X1T838), SKE134-01, SKE134-01(X1T861), SKE136-01, SKE136-01(X1T850), SKE13E-01)** este în conformitate cu cerințele esențiale și cu alte prevederi pertinente ale Directivei 1999/5/CE.
Turkish	Işbu **MITSUBISHI ELECTRIC CORPORATION, HIMEJI WORKS** bu **Keyless System (SKE133-02, SKE133-02(X1T838), SKE134-01, SKE134-01(X1T861), SKE136-01, SKE136-01(X1T850), SKE13E-01)** esas şartları ve 1999/5/EC Direktifinin diğer ilgili hükümlerine uygun olduğunu beyan eder.	Icelandic	Hér með lýsir **MITSUBISHI ELECTRIC CORPORATION, HIMEJI WORKS** yfir því að **Keyless System (SKE133-02, SKE133-02(X1T838), SKE134-01, SKE134-01(X1T861), SKE136-01, SKE136-01(X1T850), SKE13E-01)** er í samræmi við grunnkröfur og aðrar kröfur, sem gerðar eru í tilskipun 1999/5/EC.
Portuguese	**MITSUBISHI ELECTRIC CORPORATION, HIMEJI WORKS** declara que este **Keyless System (SKE133-02, SKE133-02(X1T838), SKE134-01, SKE134-01(X1T861), SKE136-01, SKE136-01(X1T850), SKE13E-01)** está conforme com os requisitos essenciais e outras disposições da Directiva 1999/5/CE.	Norwegian	**MITSUBISHI ELECTRIC CORPORATION, HIMEJI WORKS** erklærer herved at utstyret **Keyless System (SKE133-02, SKE133-02(X1T838), SKE134-01, SKE134-01(X1T861), SKE136-01, SKE136-01(X1T850), SKE13E-01)** er i samsvar med de grunnleggende krav og øvrige relevante krav i direktiv 1999/5/EF.

CAUTION · Danger of explosion if battery is incorrectly replaced Replace only with the same or equivalent type.
CAUTION · Do not exposed to excessive heat such as sunshine, fire or the like.

Keyless System Radio approval Marking

1021

Complies with IDA Standards DA100926

TA-2011958 : SKE136-01
TA-2011958 : SKE136-01
IC A SA
APPROVED

TA-2011957 : SKE134-01
TA-2011956 : SKE133-02
IC A SA
APPROVED

OMAN - TRA

R/0235/11:SKE13E-01
R/0231/11:SKE136-01
R/0234/11:SKE134-01
R/0233/11:SKE133-02

D090258

TRA
REGISTERED No:
ER0071262/11:SKE13E-01
ER0071259/11:SKE136-01
ER0071260/11:SKE134-01
ER0071261/11:SKE133-02
DEALER No:
DA0071258/11

Mitsubishi Electric Corp. Himeji Works
A00102/009
ICT

URSEC 009/FR/2013:SKE13E-01
URSEC 016/FR/2013:SKE134-01
URSEC 010/FR/2013:SKE133-02

Ghana

SKE13E-01	NCA APPROVED:3R8-8M-0E-13D
SKE136-01	NCA APPROVED:3R8-8M-0E-13E
SKE134-01	NCA APPROVED:3R8-8M-0E-13F
SKE133-02	NCA APPROVED:3R8-8M-EX-140

FCC WARNING

Changes or modifications not expressly approved by the party responsible for compliance could void the user's authority to operate the equipment.

FCC

This device complies with Part 15 of the FCC Rules. Operation is subject to the following two conditions: (1) this device may not cause harmful interference, and (2) this device must accept any interference received, including interference that may cause undesired operation.

「Approved for use in Jamaica SMA EI: [SKE13D-01/SKE135-01/SKE134-01/SKE133-02] 」

Declaration of Conformity

低功率電波輻射性電機管理辦法

第十二條

經型式認證合格之低功率射頻電機，非經許可，公司、商號或使用者均不得擅自變更頻率、加大功率或變更原設計之特性及功能。

第十四條

低功率射頻電機之使用不得影響飛航安全及干擾合法通信；經發現有干擾現象時，應立即停用，並改善至無干擾時方得繼續使用。

前項合法通信，指依電信法規定作業之無線電通信。

低功率射頻電機須忍受合法通信或工業、科學及醫療用電波輻射性電機設備之干擾。

Nigeria

Connection and use of this communications equipment is permitted by the Nigerian Communications Commission

Israel

א. השימוש במכשיר היינו על בסיס "משני" ופטור מרשיון הפעלה אלחוטי.
ב. רק "בפעולת בזק" לשימוש עצמי של הלקוח בלבד, הציוד פטור מרשיון הפעלה אלחוטי.
ג. אסור להחליף את האנטנה המקורית של המכשיר, ולא לעשות בו כל שינוי טכני אחר.

MCMC
HIDF15000118

▼Blind Spot Monitoring (BSM) System

Hella KGaA Hueck & Co.

HELLA

R&TTE Declaration of Conformity Rev.2

We ,

Company: Hella KGaA Hueck & Co.
Street: Rixbecker Str. 75
Location: 59552 Lippstadt
Country Germany

declare under the sole responsibility that the following product,

Type designation: BSD3.0
Type or model: ---
Trade name: Hella
Serial No.: ---

to which this declaration relates is in conformity with the essential requirements and other relevant requirements of the R&TTE Directive (1999/5/EC).
The product is in conformity with the following standards and/or normative documents:

Applied standards / directives were:	Title or description of the standard:	
EN 60950-1: 2006 + A11:2009 + A1:2010 + A12:2011 EN 62311:2008	Safety of information technology equipment Assessment of electronic and electrical equipment related to human exposure restrictions for electromagnetic fields (0 Hz - 300 GHz)	Health & Safety (Art. 3(1) (a)
EN 301 489-1 V1.9.2 (2011-09) + EN 301 489-3 V1.4.1 (2002-08)	Electro Magnetic Compatibility (EMC) standard for radio equipment and services; Part 3: Specific conditions for Short Range Devices (SRD) operating on frequencies between 9 kHz and 40 GHz	EMC (Art. 3.1 (b))
EN 302 858-2 V1.2.1 (2011-07)	Road Transport and Traffic Telematics (RTTT); Short Range Radar equipment operating in the 24.05 GHz to 24.25 GHz frequency range for automotive application	Other (incl. Art 3(3)) and voluntary

Supplementary information:

Notified Body involved	---	
Technical file held by	Gerald Zemke, E-ED-DAS-DR	Hella KGaA Hueck & Co.

Signed by or for the manufacturer:

Name: Bernhard Hlubek
Manager Design and Development
Driver Assistant Systems
Business Division Electronics

Contact:

Name: Gerald Zemke
Telephone: +49 (0) 2941 38 2009
Fax: +49 (0) 2941 38 472009
Email: Gerald.Zemke@hella.com

Lippstadt, 2013-12-05

i.V. Hlubek

(Signature)

Declaration of Conformity

South Africa

ICASA
TA-2013-2085

UAE

TRA
Registered No:
ER0126765/14
Dealer No:
DA0053436/10

Indonesia

35234/SDPPI/2014

2181

Qatar

ictQATAR
Type Approval reg. No.:
ICTQatar/RT/2014/R-3818

Importer No:
L3445

▼Bluetooth® Hands-Free

Type A/Type B

English	Hereby, *Johnson Controls Automotive* , declares that this **Hands-Free Telephone System** is in compliance with the essential requirements and other relevant provisions of Directive 1999/5/EC. Website: http://www.mazdahandsfree.com/EU_DoC.pdf
Finnish	*Johnson Controls Automotive* vakuuttaa täten että **Hands-Free Telephone System** tyyppinen laite on direktiivin 1999/5/EY oleellisten vaatimusten ja sitä koskevien direktiivin muiden ehtojen mukainen. Website: http://www.mazdahandsfree.com/EU_DoC.pdf
Dutch	Hierbij verklaart *Johnson Controls Automotive* dat het toestel **Hands-Free Telephone System** in overeenstemming is met de essentiële eisen en de andere relevante bepalingen van richtlijn 1999/5/EG. Website: http://www.mazdahandsfree.com/EU_DoC.pdf
French	Par la présente, *Johnson Controls Automotive* déclare que ce **Hands-Free Telephone System** est conforme aux exigences essentielles et aux autres dispositions de la directive 1999/5/CE qui lui sont applicables. Website: http://www.mazdahandsfree.com/EU_DoC.pdf
Swedish	Härmed intygar *Johnson Controls Automotive* att denna **Hands-Free Telephone System** står I överensstämmelse med de väsentliga egenskapskrav och övriga relevanta bestämmelser som framgår av direktiv 1999/5/EG. Website: http://www.mazdahandsfree.com/EU_DoC.pdf
Danish	Undertegnede Johnson Controls Automotive erklærer herved, at følgende udstyr **Hands-Free Telephone System** overholder de væsentlige krav og øvrige relevante krav i direktiv 1999/5/EF Website: http://www.mazdahandsfree.com/EU_DoC.pdf
German	Hiermit erklärt Johnson Controls Automotive, dass sich dieses **Hands-Free Telephone System** in Übereinstimmung mit den grundlegenden Anforderungen und den anderen relevanten Vorschriften der Richtlinie 1999/5/EG befindet". Website: http://www.mazdahandsfree.com/EU_DoC.pdf
Greek	ΜΕ ΤΗΝ ΠΑΡΟΥΣΑ Johnson Controls Automotive ΔΗΛΩΝΕΙ ΟΤΙ **Hands-Free Telephone System** ΣΥΜΜΟΡΦΩΝΕΤΑΙ ΠΡΟΣ ΤΙΣ ΟΥΣΙΩΔΕΙΣ ΑΠΑΙΤΗΣΕΙΣ ΚΑΙ ΤΙΣ ΛΟΙΠΕΣ ΣΧΕΤΙΚΕΣ ΔΙΑΤΑΞΕΙΣ ΤΗΣ ΟΔΗΓΙΑΣ 1999/5/ΕΚ Website: http://www.mazdahandsfree.com/EU_DoC.pdf
Italian	Con la presente Johnson Controls Automotive dichiara che questo **Hands-Free Telephone System** è conforme ai requisiti essenziali ed alle altre disposizioni pertinenti stabilite dalla direttiva 1999/5/CE. Website: http://www.mazdahandsfree.com/EU_DoC.pdf
Spanish	Por medio de la presente Johnson Controls Automotive declara que el **Hands-Free Telephone System** cumple con los requisitos esenciales y cualesquiera otras disposiciones aplicables o exigibles de la Directiva 1999/5/CE Website: http://www.mazdahandsfree.com/EU_DoC.pdf
Portuguese	Johnson Controls Automotive declara que este **Hands-Free Telephone System** está conforme com os requisitos essenciais e outras disposições da Directiva 1999/5/CE. Website: http://www.mazdahandsfree.com/EU_DoC.pdf

Declaration of Conformity

Model: MAZ

Brand: **Johnson Controls Inc.**
915 E. 32nd St., Holland. MI
49423 Michigan
United States of America
MAZ

CE 0682

FCC ID: CB2MBLUEC09

Ukraine

При участии ООС

UA. TR.004

Jamaica This product has been Type Approved by Jamaica: SMA – "MAZ."

Singapore

Complies with
IDA Standards
N1499-12

South Africa

TA-2012/768
ICASA
APPROVED

Algeria ' Agréé par l'ARPT' 'Référence d'agrément '

Azerbaijan

AZS

New Caledonia "ANFR-13INF0033"

Serbia

И011 13

Moldova

1024

Vietnam

JOHNSON CONTROLS
A0239050413BE11A2
ICT

JOHNSON CONTROLS
A0117130212BE11A2
ICT

Type C/Type D

1999/5/EC Directive regulatory notices

This device has been evaluated against the essential requirements of the 1999/5/EC Directive.

Bulgarian	С настоящето Johnson Controls Inc. декларира, че AUTOMOTIVE ELECTRONICS INFOTAINMENT HEAD UNIT отговаря на съществените изисквания и другите приложими изисквания на Директива 1999/5/ЕС.
Croatian	Johnson Controls Inc. izjavljuje da je ova jedinica AUTOMOTIVE ELECTRONICS INFOTAINMENT HEAD UNIT sukladna bitnim zahtjevima i ostalim primijenjenim normama smjernice 1999/5/EC.
Czech	Johnson Controls Inc. tímto prohlašuje, že tento AUTOMOTIVE ELECTRONICS INFOTAINMENT HEAD UNIT je ve shodě se základními požadavky a dalšími příslušnými ustanoveními směrnice 1999/5/ES.
Danish	Undertegnede Johnson Controls Inc. erklærer herved, at følgende udstyr AUTOMOTIVE ELECTRONICS INFOTAINMENT HEAD UNIT overholder de væsentlige krav og øvrige relevante krav i direktiv 1999/5/EF.
Dutch	Hierbij verklaart Johnson Controls Inc. dat het toestel AUTOMOTIVE ELECTRONICS INFOTAINMENT HEAD UNIT in overeenstemming is met de essentiële eisen en de andere relevante bepalingen van richtlijn 1999/5/EG.
English	Hereby, Johnson Controls Inc., declares that this AUTOMOTIVE ELECTRONICS INFOTAINMENT HEAD UNIT is in compliance with the essential requirements and other relevant provisions of Directive 1999/5/EC.
Estonian	Käesolevaga kinnitab Johnson Controls Inc. seadme AUTOMOTIVE ELECTRONICS INFOTAINMENT HEAD UNIT vastavust direktiivi 1999/5/EÜ põhinõuetele ja nimetatud direktiivist tulenevatele teistele asjakohastele sätetele.
German	Hiermit erklärt Johnson Controls Inc., dass sich das Gerät AUTOMOTIVE ELECTRONICS INFOTAINMENT HEAD UNIT in Übereinstimmung mit den grundlegenden Anforderungen und den übrigen einschlägigen Bestimmungen der Richtlinie 1999/5/EG befindet.
Greek	ΜΕ ΤΗΝ ΠΑΡΟΥΣΑ Johnson Controls Inc. ΔΗΛΩΝΕΙ ΟΤΙ AUTOMOTIVE ELECTRONICS INFOTAINMENT HEAD UNIT ΣΥΜΜΟΡΦΩΝΕΤΑΙ ΠΡΟΣ ΤΙΣ ΟΥΣΙΩΔΕΙΣ ΑΠΑΙΤΗΣΕΙΣ ΚΑΙ ΤΙΣ ΛΟΙΠΕΣ ΣΧΕΤΙΚΕΣ ΔΙΑΤΑΞΕΙΣ ΤΗΣ ΟΔΗΓΙΑΣ 1999/5/ΕΚ.
Hungarian	Alulirott, Johnson Controls Inc. nyilatkozom, hogy a AUTOMOTIVE ELECTRONICS INFOTAINMENT HEAD UNIT megfelel a vonatkozó alapvető követelményeknek és az 1999/5/EC irányelv egyéb előírásainak.
Finnish	Johnson Controls Inc. vakuuttaa täten että AUTOMOTIVE ELECTRONICS INFOTAINMENT HEAD UNIT tyyppinen laite on direktiivin 1999/5/EY oleellisten vaatimusten ja sitä koskevien direktiivin muiden ehtojen mukainen.
French	Par la présente Johnson Controls Inc. déclare que l'appareil AUTOMOTIVE ELECTRONICS INFOTAINMENT HEAD UNIT est conforme aux exigences essentielles et aux autres dispositions pertinentes de la directive 1999/5/CE.
Icelandic	Hér með lýsir Johnson Controls Inc. yfir því að AUTOMOTIVE ELECTRONICS INFOTAINMENT HEAD UNIT er í samræmi við grunnkröfur og aðrar kröfur, sem gerðar eru í tilskipun 1999/5/EC.
Italian	Con la presente Johnson Controls Inc. dichiara che questo AUTOMOTIVE ELECTRONICS INFOTAINMENT HEAD UNIT è conforme ai requisiti essenziali ed alle altre disposizioni pertinenti stabilite dalla direttiva 1999/5/CE.
Latvian	Ar šo Johnson Controls Inc. deklarē, ka AUTOMOTIVE ELECTRONICS INFOTAINMENT HEAD UNIT atbilst Direktīvas 1999/5/EK būtiskajām prasībām un citiem ar to saistītajiem noteikumiem.
Lithuanian	Šiuo Johnson Controls Inc. deklaruoja, kad šis AUTOMOTIVE ELECTRONICS INFOTAINMENT HEAD UNIT atitinka esminius reikalavimus ir kitas 1999/5/EB Direktyvos nuostatas.
Maltese	Hawnhekk, Johnson Controls Inc., jiddikjara li dan AUTOMOTIVE ELECTRONICS INFOTAINMENT HEAD UNIT jikkonforma mal-ħtiġijiet essenzjali u ma provvedimenti oħrajn relevanti li hemm fid-Dirrettiva 1999/5/EC.
Norwegian	Johnson Controls Inc. erklærer herved at utstyret AUTOMOTIVE ELECTRONICS INFOTAINMENT HEAD UNIT er i samsvar med de grunnleggende krav og øvrige relevante krav i direktiv 1999/5/EF.
Polish	Niniejszym Johnson Controls Inc. oświadcza, że AUTOMOTIVE ELECTRONICS INFOTAINMENT HEAD UNIT jest zgodny z zasadniczymi wymogami oraz pozostałymi stosownymi postanowieniami Dyrektywy 1999/5/EC.
Portuguese	Johnson Controls Inc. declara que este AUTOMOTIVE ELECTRONICS INFOTAINMENT HEAD UNIT está conforme com os requisitos essenciais e outras disposições da Directiva 1999/5/CE.

Declaration of Conformity

Slovak	Johnson Controls Inc. týmto vyhlasuje, že AUTOMOTIVE ELECTRONICS INFOTAINMENT HEAD UNIT spĺňa základné požiadavky a všetky príslušné ustanovenia Smernice 1999/5/ES.
Slovenian	Johnson Controls Inc. izjavlja, da je ta AUTOMOTIVE ELECTRONICS INFOTAINMENT HEAD UNIT v skladu z bistvenimi zahtevami in ostalimi relevantnimi določili direktive 1999/5/ES.
Spanish	Por medio de la presente Johnson Controls Inc. declara que AUTOMOTIVE ELECTRONICS INFOTAINMENT HEAD UNIT cumple con los requisitos esenciales y cualesquiera otras disposiciones aplicables o exigibles de la Directiva 1999/5/CE.
Swedish	Härmed intygar Johnson Controls Inc. att denna AUTOMOTIVE ELECTRONICS INFOTAINMENT HEAD UNIT står I överensstämmelse med de väsentliga egenskapskrav och övriga relevanta bestämmelser som framgår av direktiv 1999/5/EG.

In order to satisfy the essential requirements of 1999/5/EC Directive, the product is compliant with the following standards:

RF spectrum use (R&TTE art. 3.2)	EN 300 328 v1.7.1 EN 300 440-2 V1.4.1
EMC (R&TTE art. 3.1b)	EN 301 489-1 V1.9.2 EN 301 489-3 V1.4.1 EN 301 489-17 V2.2.1
Health & Safety (R&TTE art. 3.1a)	EN 60950-1:2006 + A11:2009 + A1:2010 + A12:2011 + AC:2011 EN 62311:2008

The conformity assessment procedure referred to in Article 10 and detailed in Annex IV of Directive 1999/5/EC has been followed with the involvement of the following Notified Body Notified Body:

AT4 wireless, S.A.
Parque Tecnologico de Andalucía
C/ Severo Ochoa 2
29590 Campanillas – Málaga
SPAIN
Notified Body No: 1909

Thus, the following marking is included in the product:

CE 1909

There is no restriction for the commercialisation of this device in all the countries of the European Union.

FCC ID
CB262932

CE MARK
CE 1909

MODEL - MAZDA_GEN_65_CMU
BRAND - Johnson Controls, Inc.

Botswana	BOCRA REGISTERED No : TA/2013/459
Brunei	Certificate Number to be included DRQ-D-BRUSIN-03-1998-7494-LPD-22822
Grenada	NTRC Registration Number: CL 681 / 13 - TA
Indonesia	30400/SDPPI/2013 3311
Israel	מספר אישור אלחוטי של משרד התקשורת הוא 51-38316 אסור להחליף את האנטנה המקורית של המכשיר ולא לעשות בו כל שינוי טכני אחר
Jamaica	This product has been Type Approved by Jamaica: SMA – "MAZDA_GEN_65_CMU" . This product contains a Type Approved Module by Jamaica: SMA – "MAZDA_GEN_65_CMU".
Jordan	The manufacturer: Johnson Controls, Inc. Equipment type: MAZDA_GEN_65_CMU TRC's type approval certificate number: TRC/LPD/2013/158
Morocco	AGREE PAR L'ANRT MAROC Numéro d'agrément ..... MR 8393 ANRT 2013 Date d'agrément 09/07/2013
Mozambique	INCM - 21ETA13 Model - MAZDA_GEN_65_CMU Manufacturer - Johnson Controls, Inc.
Nepal	Type = MAZDA_GEN_65_CMU
New Caledonia	ANFR - 13INF0025
Nigeria	Connection and use of this communications equipment is permitted by the Nigerian Communications Commission
Panama	ASEP DTEL No. 1201
Papua New Guinea	NICTA PNG13/0453
Peru	MTC 1300160
Philippines	NTC Type Accepted No.: ESD-1307587C
Sint Maarten	BT&P - 2013/042-b/TA&2013/042-a/TA
Saint Vincent and the Grenadines	NTRC - NTRC/01
Thailand	NBTC - RT.4780
Uruguay	URSEC - 431/FR/2013

Declaration of Conformity

Algeria	'Agréé par l'ARPT' and 'Référence d'agrément '.
Azerbaijan	AZS
Oman	OMAN - TRA R/1417/13 D100428
Singapore	Complies with IDA Standards N1995-13
South Africa	TA-2013/1184 ICASA APPROVED
UAE	TRA Registered No: 011528 Dealer No: DA0038312/10
Ukraine	UA. TR.004
Vietnam	MAZDA_GEN_65_CMU A07432B0813AE01A2 ICT JOHNSON CONTROLS A07432B0813AE01A2 ICT
Honduras	Frequency Range (MHz): 2400.0 – 2483.5 Output (Watts): BT: <4dBm WLAN: <30dBm

CCAH14LP1640T6

Product Name:	Connectivity Master Unit
Certification Name:	MAZDA_GEN_65_CMU
Certificate Holder:	Visteon Corporation

注意 ！

依據 低功率電波輻射性電機管理辦法

第十二條 經型式認證合格之低功率射頻電機，非經許可，公司、商號或使用者均不得擅自變更頻率、加大功率或變更原設計之特性及功能。

第十四條 低功率射頻電機之使用不得影響飛航安全及干擾合法通信；經發現有干擾現象時，應立即停用，並改善至無干擾時方得繼續使用。

前項合法通信，指依電信規定作業之無線電信。

低功率射頻電機須忍受合法通信或工業、科學及醫療用電波輻射性電機設備之干擾。

Electromagnetic Compatibility

Your Mazda has been tested and certified to the UNECE*1 10 regulation as related to electromagnetic compatibility. Radio Frequency (RF) transmitter equipment (e.g. cellular telephones, amateur radio transmitters, etc.) may only be fitted to your Mazda if they comply with the parameters shown in the table below.

*1 UNECE stands for United Nations Economic Commission for Europe.

It is your responsibility to ensure that any equipment you have fitted complies with applicable local legislations. Have any equipment fitted by properly trained technicians.

⚠ CAUTION

- Do not mount any transceiver, microphones, speakers, or any other item in the deployment path of the air bag system.
- Do not fasten aerial lead to original vehicle wiring, fuel pipes or brake pipes. Avoid running the aerial lead parallel with the wire harness to the best extent possible.
- Keep the aerial and power leads at least 100 mm (3.9 in) from any electronic modules and the air bags.
- Avoid using the cigar lighter or accessory socket as a power source for the RF-transmitting equipment.

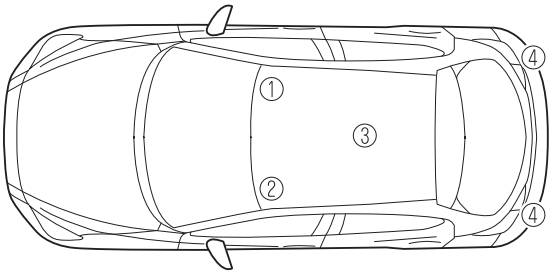

Aerial positions:

① : front right of roof
② : front left of roof
③ : centre of roof
④ : both sides of liftgate (Hatchback)

Frequency Band (MHz)	Maximum output power (Wattage)	Aerial Positions
50 — 54	50	①②③④
68 — 87.5	50	①②③④
142 — 176	50	①②③④
380 — 470	50	①②③④
806 — 940	10	①②③④
1200 — 1300	10	①②③④
1710 — 1885	10	①②③④
1885 — 2025	10	①②③④
2400 — 2500	0.01*1	In a cabin*1

*1 Only for Bluetooth®

NOTE

After the installation of RF transmitters, check for disturbances from and to all electrical equipment in the vehicle, both in the standby and transmit modes.
Check all electrical equipment:

- with the ignition ON
- with the engine running
- during a road test at various speeds.

Information for Users on Collection and Disposal of Old Equipment and Used Batteries

When disposing your old battery, please refer to the information as follows.

▼Information on Disposal in the European Union

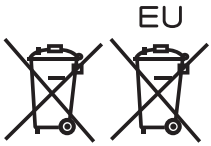

These crossed-out wheeled bin symbols on the products, packaging, and/or accompanying documents mean that used electronic products and batteries should not be mixed with general household waste. For proper treatment, recovery and recycling of old products and used batteries, please take them to applicable collection points, in accordance with your national legislation and the Directives 2006/66/EC.

By disposing of these products and batteries correctly, you will help to save valuable resources and prevent any potential negative effects on human health and the environment which could otherwise arise from inappropriate waste handling.

For more information about collection and recycling of old products and batteries, please contact your local municipality, your waste disposal service or the point of sales where you purchased the items.

NOTE

The bottom two letters might be used in combination with the crossed-out wheeled bin symbol. In this case it complies with the requirement established by the Directive for the chemical involved.
“Pb” and “Cd” mean lead and cadmium respectively.

▼Information on Disposal in Other Countries Outside the European Union

The above symbols are only valid in the European Union. If you wish to discard old products and used batteries, please contact your local authorities, your waste disposal service or the point of sales where you purchased the items, and ask for the correct method of disposal.

MEMO

9 Specifications

Technical information about your Mazda.

Identification Numbers **9-2**
Vehicle Information Labels 9-2

Specifications **9-4**
Specifications 9-4

Personalisation Features **9-13**
Personalisation Features 9-13

Vehicle Information Labels

▼Vehicle Identification Number (South Africa, Arab Gulf Cooperation Council)

The vehicle identification number legally identifies your vehicle. The number is on a plate attached to the cowl panel located on the left corner of the instrument panel. This plate can easily be seen through the windscreen.

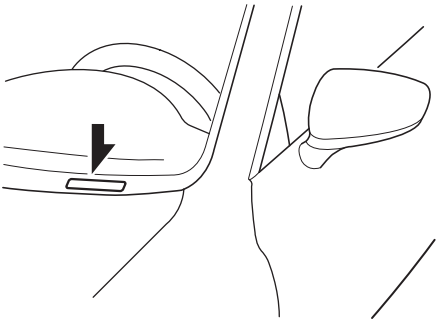

▼Model Plate

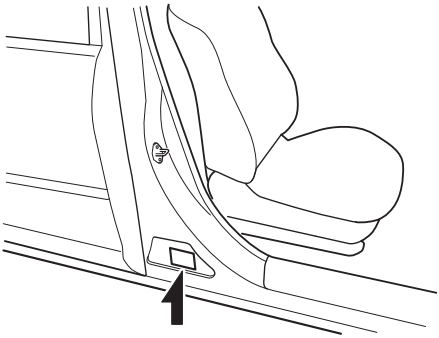

▼Chassis Number/Vehicle Identification Number (Ireland, Russia, U.K.)

Chassis Number

Open the cover shown in the figure to check the chassis number.

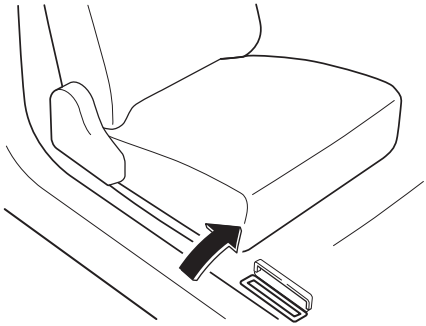

Vehicle Identification Number

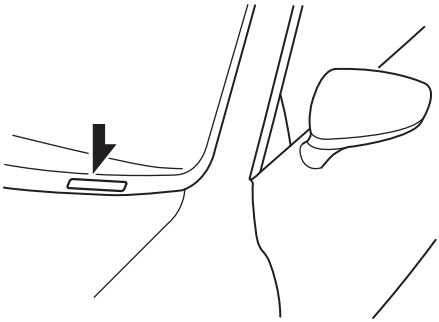

▼Vehicle Emission Control Information Label (The Philippines)

▼Tyre Pressure Label

Left-hand drive model

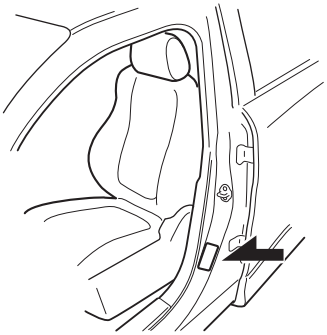

Right-hand drive model

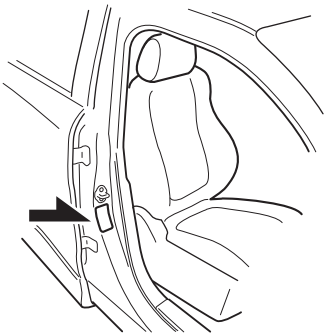

▼Engine Number

SKYACTIV-G 1.3, SKYACTIV-G 1.5

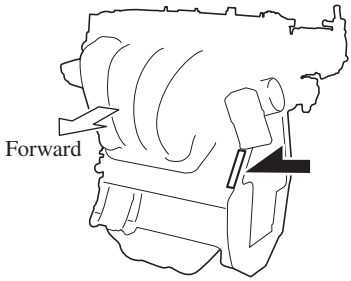

SKYACTIV-D 1.5

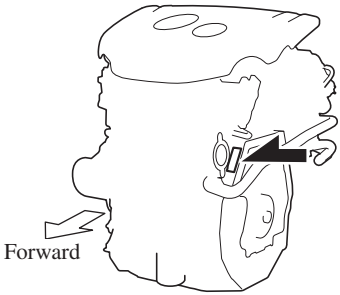

▼Conformity Plate (Arab Gulf Cooperation Council)

Production year and month are shown on this plate.

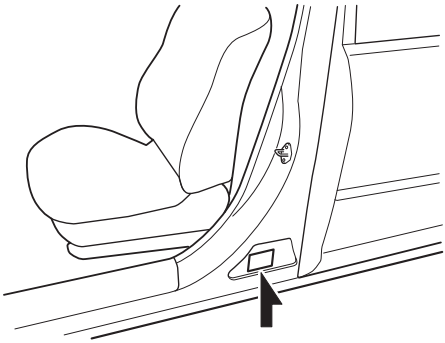

Specifications

▼Engine

Petrol engine

Item	Specification	
	SKYACTIV-G 1.3	SKYACTIV-G 1.5
Type	DOHC-16V in-line, 4-cylinder	
Bore × Stroke	71 × 82 mm (2.80 × 3.23 in)	74.5 × 85.8 mm (2.93 × 3.38 in)
Displacement	1,299 ml (1,299 cc)	1,496 ml (1,496 cc)
Compression ratio	12.0	12.0/13.0/14.0

Arab Gulf Cooperation Council

Item	Specification
	SKYACTIV-G 1.5
Maximum engine power/revolution	79 kW/6,000 rpm
Maximum engine torque/revolution	139 N•m/4,000 rpm
Maximum speed	187 km/h (116 mph)

Diesel engine

Item	Specification
	SKYACTIV-D 1.5
Type	DOHC-16V in-line, 4-cylinder
Bore × Stroke	76 × 82.6 mm (2.99 × 3.25 in)
Displacement	1,499 ml (1,499 cc)
Compression ratio	14.8

▼Electrical System

Battery

Classification	Specification
SKYACTIV-G 1.3	Q-85*1
SKYACTIV-G 1.5	N-55 (S)*1 or Q-85*1
	12V-60Ah/20HR*2
SKYACTIV-D 1.5	S-95*1 or Q-85*1

*1 N-55 (S), Q-85 or S-95 is designed for i-stop system (FOR STOP & START)/i-ELOOP system. Only N-55 (S), Q-85 or S-95 should be used to ensure correct operation of i-stop system (FOR STOP & START)/i-ELOOP system. Consult an expert repairer, we recommend an Authorised Mazda Repairer for details.
*2 Not for i-stop system/i-ELOOP system.

Spark-plug

Classification	Specification	
SKYACTIV-G 1.3, SKYACTIV-G 1.5 LP*1	Mazda Genuine spark plug*2	P51R-18-110
SKYACTIV-G 1.5 MP*1, SKYACTIV-G 1.5 HP*1	Mazda Genuine spark plug*2	PE5R-18-110 or PE5S-18-110

*1 The alphabetical letters at the end of the engine types are short for the following:
LP: Low-Power
MP: Medium-Power
HP: High-Power
*2 The spark plugs provide the SKYACTIV-G its optimum performance. Consult an expert repairer, we recommend an Authorised Mazda Repairer for details.

⚠ CAUTION

When cleaning the iridium plugs, do not use a wire brush. The fine particulate coating on the iridium alloy and platinum tips could be damaged.

Specifications

▼Lubricant Quality

<table>
<tr><th>Engine oil*1</th><th colspan="2">Europe</th><th>Except Europe</th></tr>
<tr><td rowspan="6">SKYACTIV-G 1.3,
SKYACTIV-G 1.5</td><td colspan="2">Recommended Oils*2</td><td>Oil Quality</td></tr>
<tr><td colspan="2">Mazda Original Oil Supra 0W-20</td><td rowspan="5">API SG/SH/SJ/SL/SM/SN*4 or
ILSAC GF-II/GF-III/GF-IV/GF-V</td></tr>
<tr><td colspan="2">Mazda Original Oil Ultra 5W-30</td></tr>
<tr><td colspan="2">Alternative Oil Quality*3</td></tr>
<tr><td rowspan="2">API SL/SM/SN or ACEA
A3/A5</td><td>0W-20</td></tr>
<tr><td>5W-30</td></tr>
<tr><td rowspan="6">SKYACTIV-D 1.5</td><td colspan="2">Recommended Oils*2</td><td>Oil Quality</td></tr>
<tr><td colspan="2">Mazda Original Oil Supra DPF 0W-30</td><td rowspan="5">ACEA C3
0W-30/5W-30</td></tr>
<tr><td colspan="2">Mazda Original Oil Ultra DPF 5W-30</td></tr>
<tr><td colspan="2">Alternative Oil Quality*3</td></tr>
<tr><td rowspan="2">ACEA C3</td><td>0W-30</td></tr>
<tr><td>5W-30</td></tr>
</table>

*1 Refer to the recommended SAE viscosity numbers on page 6-23.
*2 Mazda Original Oils are specially designed/tested for the respective engine. For optimum performance we recommend to use Mazda Original Oils at all times.
*3 If you are unable to find a Mazda Original Oil, alternative oils meeting the listed specification may also be used.
*4 For African nations, use SL or higher engine oil with the SKYACTIV-G 1.3 and SKYACTIV-G 1.5 LP (Low-Power) engines.

Do not use oils which do not meet the above specification or requirements. Use of unsuitable oil may lead to engine damage which is not covered by the Mazda Warranty.

Lubricant	Classification	
Coolant	FL-22 type	
Manual transaxle oil	API Service	GL-4
	SAE	75W-80
Automatic transaxle fluid	Mazda Original Oil ATF-FZ	
Brake/Clutch fluid	SAE J1703 or FMVSS116 DOT-3 or DOT-4*1	

*1 **(Except European models)**
Use FMVSS116 DOT-4 brake fluid for vehicles equipped with the SKYACTIV-D 1.5 engine and drum type rear brakes.

▼Capacities

(Approximate Quantities)

Item						Capacity
Engine oil	SKYACTIV-G 1.3, SKYACTIV-G 1.5		With oil filter replacement			4.2 L (4.4 US qt, 3.7 Imp qt)
			Without oil filter replacement			3.9 L (4.1 US qt, 3.4 Imp qt)
	SKYACTIV-D 1.5		With oil filter replacement			5.1 L (5.4 US qt, 4.5 Imp qt)
			Without oil filter replacement			4.7 L (5.0 US qt, 4.1 Imp qt)
Coolant	SKYACTIV-G 1.3					5.2 L (5.5 US qt, 4.6 Imp qt)
	SKYACTIV-G 1.5	Manual transaxle	Europe	Left-hand drive model		5.4 L (5.7 US qt, 4.8 Imp qt)
				Right-hand drive model		5.0 L (5.3 US qt, 4.4 Imp qt)
			Russia			5.4 L (5.7 US qt, 4.8 Imp qt)
			Israel			5.0 L (5.3 US qt, 4.4 Imp qt)
			Except above	Left-hand drive model*1		5.0 L (5.3 US qt, 4.4 Imp qt)/ 5.4 L (5.7 US qt, 4.8 Imp qt)
				Right-hand drive model	With heater	5.0 L (5.3 US qt, 4.4 Imp qt)
					Without heater	4.5 L (4.8 US qt, 4.0 Imp qt)
		Automatic transaxle	Europe	Left-hand drive model		5.6 L (5.9 US qt, 4.9 Imp qt)
				Right-hand drive model		5.2 L (5.5 US qt, 4.6 Imp qt)
			Russia			5.6 L (5.9 US qt, 4.9 Imp qt)
			Israel, Saudi Arabia			5.2 L (5.5 US qt, 4.6 Imp qt)
			Except above	Left-hand drive model*1		5.2 L (5.5 US qt, 4.6 Imp qt)/ 5.6 L (5.9 US qt, 4.9 Imp qt)
				Right-hand drive model	With heater	5.2 L (5.5 US qt, 4.6 Imp qt)
					Without heater	4.7 L (5.0 US qt, 4.1 Imp qt)
	SKYACTIV-D 1.5	For engine	Europe			6.6 L (7.0 US qt, 5.8 Imp qt)
			Except above	Left-hand drive model		6.7 L (7.1 US qt, 5.9 Imp qt)
				Right-hand drive model		6.8 L (7.2 US qt, 6.0 Imp qt)
		For water-cooled charge air cooler				2.0 L (2.1 US qt, 1.8 Imp qt)
Manual transaxle oil	SKYACTIV-G 1.5					1.59 L (1.68 US qt, 1.40 Imp qt)
	SKYACTIV-D 1.5					1.64 L (1.73 US qt, 1.44 Imp qt)
Automatic transaxle fluid	SKYACTIV-G 1.3, SKYACTIV-G 1.5					7.2 L (7.6 US qt, 6.3 Imp qt)
	SKYACTIV-D 1.5					7.8 L (8.2 US qt, 6.9 Imp qt)
Fuel tank						44.0 L (11.6 US gal, 9.68 Imp gal)

Check oil and fluid levels with dipsticks or reservoir gauges.

*1 The engine coolant amount varies depending on the specification.

Specifications

▼Dimensions

Saloon

Item		Vehicle specification
Overall length		4,320 mm (170.1 in)
Overall width		1,695 mm (66.7 in)
Overall height	Except Colombia	1,470 mm (57.9 in)
	Colombia	1,485 mm (58.5 in)
Front tread		1,495 mm (58.9 in)
Rear tread		1,485 mm (58.5 in)
Wheelbase		2,570 mm (101.2 in)

Hatchback

Item		Vehicle specification
Overall length		4,060 mm (159.8 in)
Overall width		1,695 mm (66.7 in)
Overall height	Except Colombia	1,495 mm (58.9 in)
	Colombia	1,505 mm (59.3 in)
Front tread	Except Colombia	1,495 mm (58.9 in)
	Colombia	1,490 mm (58.7 in)
Rear tread		1,485 mm (58.5 in)
Wheelbase		2,570 mm (101.2 in)

▼Light Bulbs

Exterior light

Light bulb			Category	
			Wattage	UNECE*1(SAE)
Headlights	Halogen bulb headlights	High/Low beam	60/55	H4 (H4)
	LED headlights	High beam	LED*2	— (—)
		Low beam	LED*2	— (—)
Running lights*	With halogen bulb headlights		21/5*3	W21/5W (7443)
	With LED headlights		LED*2	— (—)

*Some models.

Light bulb			Category	
			Wattage	UNECE*1(SAE)
Position lights	With halogen bulb headlights	With running lights	21/5*4	W21/5W (7443)
		Without running lights	5	W5W (—)
	With LED headlights		LED*2	— (—)
Front direction indicator lights			21	WY21W (7443NA)
Front fog lights*			55	H11 (H11)
Side direction indicator lights			LED*2	— (—)
High-mount brake light			LED*2	— (—)
Rear direction indicator lights			21	WY21W (7443NA)
Brake lights/Tail lights	Bulb type		21/5	W21/5W (7443)
	LED type		LED*2	— (—)
Reverse lights			16	W16W (921)
Rear fog light*			21	W21W (7440)
Number plate lights			5	W5W (—)

*1 UNECE stands for United Nations Economic Commission for Europe.
*2 LED is the abbreviation for Light Emitting Diode.
*3 Double-filament light bulb, however, only 21 W filament bulb is used in the running lights.
*4 Double-filament light bulb, however, only 5 W filament bulb is used in the position lights.

Interior light

Light bulb		Category	
		Wattage	UNECE*1
Boot light (Saloon)		3	—
Luggage compartment light (Hatchback)		5	—
Overhead light (Front)	With map lights	8	—
	Without map lights	10	—
Overhead light (Rear)*		10	—

*1 UNECE stands for United Nations Economic Commission for Europe.

Specifications

▼Tyres

Sample tyre mark and its meaning

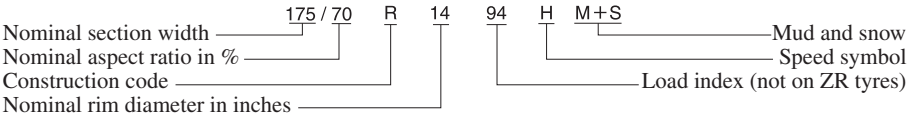

Tyre mark information

Choose the proper tyres for your vehicle using the following tyre mark information.

Speed symbol	Maximum permissible speed
Q	Up to 160 km/h (99 mph)
R	Up to 170 km/h (105 mph)
S	Up to 180 km/h (111 mph)
T	Up to 190 km/h (118 mph)
U	Up to 200 km/h (124 mph)
H	Up to 210 km/h (130 mph)
V	Up to 240 km/h (149 mph)
W	Up to 270 km/h (167 mph)
Y	Up to 300 km/h (186 mph)
ZR	Over 240 km/h (149 mph)

Tyre and inflation pressure

NOTE

The tyres have been optimally matched with the chassis of your vehicle.
When replacing tyres, Mazda recommends that you replace tyres of the same type originally fitted to your vehicle. For details, contact an expert repairer, we recommend an Authorised Mazda Repairer.

Check the tyre pressure label for tyre size and inflation pressure (page 6-44).
After adjusting the tyre pressure, initialization of the tyre pressure monitoring system is necessary to make the system operates normally.
Refer to Tyre Pressure Monitoring System Initialization on page 4-146.

Standard tyre

Tyre size			Inflation pressure	
			Up to 3 persons	—Full load
185/65R15 88S		Front	260 kPa (2.6 bar, 38 psi)	270 kPa (2.7 bar, 39 psi)
		Rear	230 kPa (2.3 bar, 33 psi)	320 kPa (3.2 bar, 46 psi)
185/65R15 88T	Type A*1	Front	230 kPa (2.3 bar, 33 psi)	260 kPa (2.6 bar, 38 psi)
		Rear	210 kPa (2.1 bar, 30 psi)	320 kPa (3.2 bar, 46 psi)
	Type B*1	Front	250 kPa (2.5 bar, 36 psi)	270 kPa (2.7 bar, 39 psi)
		Rear	230 kPa (2.3 bar, 33 psi)	320 kPa (3.2 bar, 46 psi)
	Type C*1	Front	260 kPa (2.6 bar, 38 psi)	270 kPa (2.7 bar, 39 psi)
		Rear	230 kPa (2.3 bar, 33 psi)	320 kPa (3.2 bar, 46 psi)
	Type D*1	Front	240 kPa (2.4 bar, 35 psi)	260 kPa (2.6 bar, 38 psi)
		Rear	210 kPa (2.1 bar, 30 psi)	320 kPa (3.2 bar, 46 psi)
185/60R16 86H	Type A*1	Front	250 kPa (2.5 bar, 36 psi)	260 kPa (2.6 bar, 38 psi)
		Rear	230 kPa (2.3 bar, 33 psi)	330 kPa (3.3 bar, 48 psi)
	Type B*1	Front	250 kPa (2.5 bar, 36 psi)	270 kPa (2.7 bar, 39 psi)
		Rear	230 kPa (2.3 bar, 33 psi)	330 kPa (3.3 bar, 48 psi)
	Type C*1	Front	260 kPa (2.6 bar, 38 psi)	270 kPa (2.7 bar, 39 psi)
		Rear	230 kPa (2.3 bar, 33 psi)	330 kPa (3.3 bar, 48 psi)

1 person's weight: About 75 kg

*1 Check the tyre inflation pressure label (driver's door frame) for the correct tyre inflation pressure. Refer to Tyre Pressure Label on page 9-3.

Temporary spare tyre*

Tyre size	Inflation pressure
T125/90R15 96M	420 kPa (60 psi)
T125/70D15 95M	420 kPa (60 psi)
165/65R14 79M	250 kPa (2.5 bar, 36 psi)

*Some models.

Specifications

Winter tyre

Tyre size		Inflation pressure	
		Up to 3 persons	—Full load
185/65R15*1M+S	Front	230 kPa (2.3 bar, 33 psi)*3/ 240 kPa (2.4 bar, 35 psi)*4	260 kPa (2.6 bar, 38 psi)
	Rear	230 kPa (2.3 bar, 33 psi)	320 kPa (3.2 bar, 46 psi)
185/60R16*2M+S	Front	250 kPa (2.5 bar, 36 psi)*3/ 260 kPa (2.6 bar, 38 psi)*4	270 kPa (2.7 bar, 39 psi)
	Rear	250 kPa (2.5 bar, 36 psi)	320 kPa (3.2 bar, 46 psi)*5/ 350 kPa (3.5 bar, 50 psi)*6

1 person's weight: About 75 kg

*1 Load index and Speed Symbol: 88Q/88S/88T
*2 Load index and Speed Symbol: 86Q/86S/86T/86H
*3 SKYACTIV-G 1.5
*4 SKYACTIV-D 1.5
*5 Load index and Speed Symbol: 86Q/86S/86T
*6 Load index and Speed Symbol: 86H

Wheel nut tightening torque

When installing a tyre, tighten the wheel nut to the following torque.
108—147 N•m (12—14 kgf•m, 80—108 ft•lbf)

▼Fuses

Refer to Fuses on page 6-61.

▼Brakes

If you require information regarding the wear limit specification for the brake disc plates and drums, or the measurement method, please contact an expert repairer, we recommend an Authorised Mazda Repairer. The information is made freely available.

Personalisation Features

The following personalisation features can be set or changed by an Authorised Mazda Repairer. Consult an Authorised Mazda Repairer for details.
Additionally, some of the personalisation features can be changed by the customer depending on the feature.
Personalisation features and settings which can be changed differ depending on the market and specification.

① **Settings can be changed by operating the centre display screen.**
A: Refer to Settings on page 5-67.
B: Refer to Active Driving Display on page 4-36.
C: Refer to Fuel Economy Monitor on page 4-91.

② **Settings can be changed by operating the vehicle switches.**
D: Refer to Stopping The Smart City Brake Support (SCBS) on page 4-130.
E: Refer to Auto Lock/Unlock Function on page 3-16.
F: Refer to Transmitter on page 3-4.
G: Refer to Locking, Unlocking with Request Switch (With the advanced keyless function) on page 3-13.

③ **Settings can be changed by an Authorised Mazda Repairer.**

Item	Feature		Factory Setting	Available Settings	Settings Change Method		
					①	②	③
Safety							
Smart City Brake Support (SCBS) (page 4-126)	Operational/non-operational*1		On	On/Off	A	D	—
Lane Departure Warning System (LDWS) (page 4-105)	Distance by which the system uses to determine the possibility of a lane departure		Adaptive	Adaptive/ Early/ Medium/ Late	A	—	×
	Warning sensitivity (likelihood of warning)		Medium	Often/Medium/Rare	A	—	×
	Warning beep sound*2		Rumbl.	Beep/Rumbl.	A	—	×
	Warning beep volume	Rumbl.	Low	High/Mid/Low	A	—	×
		Beep	Low	High/Low	A	—	×
Blind Spot Monitoring (BSM) system (page 4-111)	Warning beep volume*3		High	High/ Low/ Off	A	—	×

Personalisation Features

Item	Feature		Factory Setting	Available Settings	Settings Change Method		
					①	②	③
Vehicle							
Door locks (page 3-16)	Operation condition of auto lock/unlock function		Lock: When Driving Unlock: IGN Off	Lock: When Driving Unlock: In Park/ Lock: Out of Park Unlock: In Park/ Lock: Shifting Out of Park/ Lock: When Driving Unlock: IGN Off/ Lock: When Driving/ Off	A	E	×
Keyless entry system (page 3-3)	Time for locking door automatically		30 seconds	90 seconds/ 60 seconds/ 30 seconds	A	—	×
Advanced keyless entry system (page 3-8)	Time for locking door automatically		30 seconds	90 seconds/ 60 seconds/ 30 seconds	A	—	×
	Auto-lock function operation/ non-operational		Off	On/Off	A	—	×
	Beep volume when locking/ unlocking	European models	Off	High/ Medium/ Low/ Off	A	F, G	×
		Except European models	Medium				
Illuminated entry system (page 5-152)	Time until interior lights turn off after closing door		15 seconds	60 seconds/ 30 seconds/ 15 seconds/ 7.5 seconds	A	—	×
	Time until interior lights turn off automatically when any door is not closed completely		30 minutes	60 minutes/ 30 minutes/ 10 minutes	A	—	×
Auto-wiper control (page 4-71)	Operational/non-operational		On	On/Off*4	A	—	×
Running lights (page 4-67)	Operational/non-operational		On	On/Off	A	—	×
Auto-light control (page 4-60)	Timing by which lights turn on		Medium	High/ Med. High/ Medium/ Med. Low/ Low	A	—	×
High Beam Control System (HBC) (page 4-102)	Operational/non-operational*1		On	On/Off	A	—	×

Item	Feature	Factory Setting	Available Settings	Settings Change Method		
				①	②	③
Lights-on reminder (page 7-48)	Warning beep volume	High	High/Low/Off	A	—	×
Coming home light system (page 4-65)	Time until headlights turn off	30 seconds	120 seconds/ 90 seconds/ 60 seconds/ 30 seconds/ Off	A	—	×
Leaving home light system (page 4-66)	Operational/non-operational	On or Off	On/Off	A	—	×
Turn indicator (page 4-70)	Beep volume	High	High/Low	A	—	×
Three-flash turn signal (page 4-70)	Operational/non-operational	On or Off	On/Off	A	—	×
Active driving display (page 4-36)	Setting can be changed so that the Turn-by-Turn (TBT) of the Active driving display is not displayed.	On	On/Off	B	—	×
System						
Language	Language indicated in display	English	Depends on market*5	A	—	×
Temperature	Temperature unit indicated in display	°C	°F/°C	A	—	×
Distance	Distance unit indicated in display	mi or km	mi/km	A	—	×
Fuel Economy Monitor (page 4-91)						
Ending display	On/off	Off	On/Off	C	—	×
Fuel economy resetting procedure	Linkage/non-linkage with fuel economy reset and trip meter reset	Off	On/Off	C	—	×

*1 Though these systems can be turned Off, doing so will defeat the purpose of the system and Mazda recommends that these systems remain On.
*2 For vehicles with an audio system other than the on-screen function type, the warning sound cannot be changed. The warning sound is only a beep.
*3 Only the volume of the warning beep during Blind Spot Monitoring (BSM) operation can be changed. The volume of the warning beep during Rear Cross Traffic Alert (RCTA) operation cannot be changed.
*4 If the auto-wiper control is set to Off, the wiper lever **AUTO** position is set to intermittent operation.
*5 Available only in display from the centre display.

MEMO

10 Index

1

120 km/h warning beep..... 7-52

A

Accessory Socket..... 5-153
Active Driving Display..... 4-36
Add-On Non-Genuine Parts and Accessories 8-3
Adjustable Speed Limiter 4-121
Advanced Key
Advanced keyless entry system 3-8
Operational range..... 3-9
Air Bag/Seat Belt Pretensioner System Warning Beep..... 7-48
Air Bag Systems 2-41
Air-Conditioning System..... 5-2
Fully Automatic Type..... 5-12
Manual Type..... 5-5
Operating Tips..... 5-2
Vent Operation 5-3
Ambient Temperature Display..... 4-33
Antilock Brake System (ABS)..... 4-84
Ashtray..... 5-157
Audio Control Switch
Adjusting the Volume..... 5-70
Mute Switch 5-71
Seek Switch..... 5-70
Audio System..... 5-16
AUX/USB mode 5-71
Aerial..... 5-16
Audio Control Switch 5-69
Audio set [Type A/Type B (non-touchscreen)]..... 5-29
Audio set [Type C/Type D (touchscreen)]..... 5-45
Operating Tips for Audio System... 5-17
Automatic Transaxle 4-48
Active Adaptive Shift (AAS) 4-50
Direct Mode 4-58
Driving tips..... 4-59
Manual shift mode..... 4-51
Shift-lock override 4-51
Shift-lock system..... 4-50
Shift position indication 4-49
Transaxle ranges..... 4-49
Warning light..... 4-49

B

Battery..... 6-38
Inspecting Electrolyte Level 6-40
Maintenance 6-40
Recharging 6-40
Replacement..... 6-40
Specifications 9-5
Battery runs out..... 7-24
Jump-Starting 7-24
Blind Spot Monitoring (BSM)..... 4-111
Blind Spot Monitoring (BSM) System warning beep..... 7-51
Bluetooth® 5-91
Bluetooth® Audio (Type A/ Type B)..... 5-133
Bluetooth® Audio (Type C/ Type D)..... 5-136
Bluetooth® Hands-Free (Type A/Type B)..... 5-117
Bluetooth® Hands-Free (Type C/Type D)..... 5-124
Troubleshooting 5-147
Body Lubrication 6-32
Bonnet Release..... 6-19
Boot Lid 3-20
When Liftgate/Boot Lid Cannot be Opened 3-20
When liftgate/boot lid cannot be opened 7-53
Boot Light 5-150
Bottle Holder..... 5-154

Brakes
Brakes assist 4-81
Foot brake..... 4-79
Pad wear indicator..... 4-81
Parking brake 4-80
Warning light..... 4-80

C

Capacities..... 9-7
Carbon Monoxide 3-30
Cargo Sub-Compartment 5-156
Cell Phones 8-4
Child Restraint
Categories of child-restraint systems 2-27
Child-restraint precautions..... 2-22
Child-restraint system installation... 2-27
Child-restraint system suitability for various seat positions table..... 2-32
Installing child-restraint systems... 2-36
Child Safety Locks for Rear Doors..... 3-20
Clock 5-32
Collision warning..... 7-51
Coming Home Light System 4-65
Control Status Display 4-93
Cruise Control..... 4-138
Cruise Control Switch..... 4-138
Cruise Main Indicator Light (Amber)/ Cruise Set Indicator Light (Green) 4-139
Cruise Control Set Vehicle Speed Display 4-33
Cup Holder..... 5-154

D

Defogger
Mirror 4-76
Rear window 4-76
Diesel Particulate Filter..... 4-147
Dimensions 9-8
Direct Mode
Automatic transaxle 4-58
Direction Indicators 4-70
Door Locks..... 3-10
Drive selection 4-97
Driving In Flooded Area 3-53
Driving Tips
Automatic transaxle 4-59
Driving in flooded area..... 3-53
Floor mat 3-49
Hazardous driving 3-48
Rocking the vehicle..... 3-50
Running-in..... 3-47
Saving fuel and protection of the environment..... 3-47
Turbocharged vehicles (SKYACTIV-D 1.5) 3-54
Winter driving 3-50
Dynamic Stability Control (DSC)..... 4-86
DSC OFF Indicator Light..... 4-87
DSC OFF Switch..... 4-87
TCS/DSC Indicator Light 4-86

E

Effectiveness Display..... 4-96
Electronic steering lock warning beep... 7-51
Emergency Starting
Push-Starting 7-27
Running Out of Fuel (SKYACTIV-D 1.5) 7-28
Starting a Flooded Engine (SKYACTIV-G 1.3 and SKYACTIV-G 1.5) 7-27
Emergency Stop Signal System 4-82
Emergency Towing
Towing Description..... 7-31
Towing/Tiedown Hooks..... 7-32
Emission Control System (SKYACTIV-D 1.5) 3-29
Emission Control System (SKYACTIV-G 1.3, SKYACTIV-G 1.5)..... 3-28
Ending Display..... 4-96

Engine
Bonnet release 6-19
Coolant 6-29
Engine Compartment Overview.... 6-21
Exhaust gas..... 3-30
Oil..... 6-23
Starting 4-5
Essential information 6-2
Exhaust Gas 3-30
Exterior Care..... 6-67
Aluminium Wheel Maintenance ... 6-72
Bright-Metal Maintenance 6-72
Cavity Protection..... 6-71
Maintaining the Finish 6-69
Paint Damage Touch-up 6-71
Plastic Part Maintenance 6-73
Undercoating 6-72

F

Flasher
Hazard warning 4-77
Headlights 4-60
Flat Tyre 7-3
Mounting the Spare Tyre..... 7-21
Removing a Flat Tyre 7-17
Floor Mat 3-49
Fluid
Brake/Clutch 6-31
Washer..... 6-32
Fluids
Classification 9-6
Fog Lights 4-67
Front 4-67
Rear 4-68
Foot Brake..... 4-79
Forward Sensing Camera (FSC) 4-132
Front Seat 2-5
Fuel
Filler flap and cap..... 3-31
Gauge 4-31
Requirements (SKYACTIV-D 1.5)... 3-27
Requirements (SKYACTIV-G 1.3, SKYACTIV-G 1.5)..... 3-26
Tank capacity 9-7
Fuel Consumption Display 4-92
Fuel Economy Monitor..... 4-91
Control status display..... 4-93
Effectiveness display..... 4-96
Ending display..... 4-96
Fuel consumption display 4-92
Fuses 6-61
Panel description 6-64
Replacement..... 6-61

G

Gauges..... 4-24
Glove Compartment..... 5-155

H

Hazard Warning Flasher..... 4-77
Hazardous Driving 3-48
Head Restraint..... 2-11
Headlight Washer 4-75
Headlights
Coming home light system..... 4-65
Control..... 4-60
Flashing 4-65
High-low beam..... 4-65
Leaving home light system 4-66
Levelling 4-66
Running lights 4-67
Washer..... 4-75
High Beam Control System (HBC)... 4-102
Hill Launch Assist (HLA)..... 4-82
Horn 4-77

I

i-ACTIVSENSE 4-100
Active Safety Technology 4-100
Adjustable Speed Limiter 4-121
Blind Spot Monitoring (BSM) 4-111
Detection Devices 4-101
Forward Sensing Camera (FSC) ... 4-132
High Beam Control System (HBC) 4-102
Lane Departure Warning System (LDWS) 4-105
Laser Sensor 4-134
Pre-Crash Safety Technology 4-100
Radar Sensors (Rear) 4-136
Rear Cross Traffic Alert (RCTA) ... 4-118
Smart City Brake Support (SCBS) 4-126
i-ELOOP 4-88
Control status display 4-90
Display 4-88
i-ELOOP indicator light 4-90
i-stop 4-13
i-stop OFF switch 4-21
Indicator light (Green) 4-18
Vehicle roll prevention function 4-22
Warning light (Amber) 4-18
i-stop warning beep 7-50
If a Warning Light Turns On or Flashes 7-35
If the Active Driving Display does not operate 7-55
Ignition Switch 4-4
Ignition not switched off (STOP) warning beep 7-49
Illuminated Entry System 5-152
Immobilizer System 3-41
Indicator Lights 4-41
Glow plug 4-44
Low engine coolant temperature ... 4-44
Wrench 4-43
Inspecting Brake/Clutch Fluid Level ... 6-31
Inspecting Coolant Level 6-29
Inspecting Engine Oil Level 6-28
Inspecting Washer Fluid Level 6-32
Instrument Cluster 4-24
Instrument Panel Illumination 4-32
Interior Care 6-73
Active driving display maintenance 6-75
Cleaning the window interiors 6-76
Instrument panel top maintenance ... 6-75
Leather upholstery maintenance ... 6-74
Panel maintenance 6-76
Plastic part maintenance 6-75
Seat belt maintenance 6-74
Upholstery maintenance 6-74
Vinyl upholstery maintenance 6-74
Interior Lights 5-150
Boot Light 5-150
Luggage Compartment Light 5-150
Map Lights 5-150
Overhead Lights 5-150

J

Jack 7-6
Jump-Starting 7-24

K

Key Suspend Function 3-7
Key left-in-luggage compartment warning beep (With the advanced keyless function) 7-50
Key left-in-vehicle warning beep (With the advanced keyless function) 7-50
Keyless Entry System 3-3
Key removed from vehicle warning beep 7-49
Keys 3-2
Key suspend function 3-7
Transmitter 3-4

L

Label Information 9-2
Lane-Change Signals 4-70
Lane Departure Warning System (LDWS)..... 4-105
LDWS switch 4-108
Lane departure warning system (LDWS) warning sound..... 7-51
Laser Sensor..... 4-134
Leaving Home Light System 4-66
Liftgate..... 3-20
When Liftgate/Boot Lid Cannot be Opened 3-20
When liftgate/boot lid cannot be opened 7-53
Liftgate/Boot Lid
Luggage compartment..... 3-24
Light Bulbs
Replacement..... 6-48
Specifications 9-8
Lighting Control..... 4-60
Lights-on reminder..... 7-48
Lubricant Quality 9-6
Luggage Compartment Light..... 5-150

M

Maintenance
Information..... 6-2
Scheduled 6-3
Maintenance Monitor..... 6-15
Manual Transaxle Operation..... 4-45
Manual Windows 3-40
Map Lights..... 5-150
Message Indicated on Display 7-46
Meters and Gauges..... 4-24
Mirror Defogger..... 4-76
Mirrors
Outside mirrors..... 3-34
Rearview mirror 3-36

O

Odometer and Trip Meter..... 4-26
Outside Mirrors..... 3-34
Outside Temperature Display..... 4-33
Outside temperature warning beep 7-51
Over Rev. buzzer..... 7-52
Overhead Console..... 5-155
Overhead Lights..... 5-150
Overheating..... 7-29
Owner Maintenance
Closing the Bonnet..... 6-20
Engine Compartment Overview.... 6-21
Key battery replacement 6-41
Opening the Bonnet..... 6-19
Owner Maintenance Precautions... 6-17

P

Parking Brake..... 4-80
Parking Sensor System 4-157
Park assist sensor system operation..... 4-159
Sensor detection range 4-159
Personalisation Features..... 9-13
Power Steering..... 4-99
Power Windows 3-37
Power steering warning buzzer..... 7-52

R

Radar Sensors (Rear) 4-136
Rear Coat Hooks..... 5-157
Rear Cross Traffic Alert (RCTA) 4-118
Rear Door Child Safety Locks..... 3-20
Rear Seat 2-7

Rear View Monitor
Displayable range on the screen... 4-150
Picture quality adjustment..... 4-156
Rear view monitor operation..... 4-152
Rear view parking camera location..... 4-149
Switching to the rear view monitor display 4-149
Variance between actual road conditions and displayed Image 4-154
Viewing the display..... 4-151
Rear Window Defogger 4-76
Rear Window Washer..... 4-75
Rear Window Wiper..... 4-75
Rearview Mirror..... 3-36
Recommended Oil 6-23
Recording of Vehicle Data 8-5
Registering Your Vehicle in A Foreign Country 8-2
Replacement
Fuse 6-61
Key battery 6-41
Light Bulbs..... 6-48
Tyres 6-46
Wheel 6-47
Wiper..... 6-33
Request switch inoperable warning beep (With the advanced keyless function)... 7-50
Roadside Emergency Triangle Retaining Strap 7-2
Rocking the Vehicle 3-50
Running-In 3-47

S

SRS Air Bags
Front passenger air bag deactivation switch 2-47
How the SRS air bags work 2-52
Limitations to SRS air bag 2-58
SRS air bag deployment criteria ... 2-56
Supplementary restraint system components 2-51
Saving Fuel and Protection of the Environment..... 3-47
Scheduled Maintenance 6-3
Seat Belt System
2-point type 2-20
3-point type 2-17
Emergency locking..... 2-16
Pregnant women..... 2-16
Seat belt precautions 2-13
Seat belt warning beep 7-48
Seats
Front seat..... 2-5
Head restraint 2-11
Rear seat 2-7
Seat warmer..... 2-6
Security System
Immobilizer system..... 3-41
Theft-deterrent system 3-43, 3-46
Smart City Brake Support (SCBS) ... 4-126
Spare Tyre 7-8
Specifications 9-4
Speed Limiter Warning Beep..... 7-51
Speed Unit Selector..... 4-25
Speedometer..... 4-25
Starting the Engine..... 4-5
Steering Wheel..... 3-33
Horn..... 4-77
Storage Compartments..... 5-155
Cargo sub-compartment 5-156
Glove compartment..... 5-155
Overhead console 5-155
Rear coat hooks 5-157
Sunvisors..... 5-150

T

Tachometer..... 4-30
Theft-Deterrent System..... 3-43
Towing
Towing caravans and trailers (Europe/Russia/Turkey/Israel/South Africa) 3-55
Towing Description..... 7-31

Towing/Tiedown
Hook 7-32
Traction Control System (TCS) 4-85
TCS/DSC Indicator Light 4-85
Transmitter 3-4
Trip Computer 4-33
Trip Meter 4-26
Trouble
Battery runs out 7-24
Emergency Starting 7-27
Emergency Towing 7-31
Flat Tyre 7-3
Overheating 7-29
Parking in an Emergency 7-2
When liftgate/boot lid cannot be opened 7-53
Tyre Pressure Monitoring System 4-143
Tyre inflation pressure warning beep ... 7-51
Tyres 6-43
Flat Tyre 7-3
Replacing a Tyre 6-46
Replacing a Wheel 6-47
Snow tyres 3-51
Specifications 9-10
Temporary Spare Tyre 6-46
Tyre Inflation Pressure 6-44
Tyre Rotation 6-45
Tyre chains 3-51

V

Vanity Mirrors 5-150
Vehicle Information Labels 9-2
Vehicle speed alarm 7-50

W

Warning Lights 4-39
Warning Sound is Activated 7-48
120 km/h warning beep 7-52
Air Bag/Seat Belt Pretensioner System Warning Beep 7-48
Blind Spot Monitoring (BSM) System warning beep 7-51
Collision warning 7-51
Electronic steering lock warning beep 7-51
i-stop warning beep 7-50
Ignition not switched off (STOP) warning beep 7-49
Key left-in-luggage compartment warning beep (With the advanced keyless function) 7-50
Key left-in-vehicle warning beep (With the advanced keyless function) 7-50
Key removed from vehicle warning beep 7-49
Lane departure warning system (LDWS) warning sound 7-51
Lights-on reminder 7-48
Outside temperature warning beep ... 7-51
Over Rev. buzzer 7-52
Power steering warning buzzer 7-52
Request switch inoperable warning beep (With the advanced keyless function) 7-50
Seat belt warning beep 7-48
Speed Limiter Warning Beep 7-51
Tyre inflation pressure warning beep 7-51
Vehicle speed alarm 7-50
Warranty 8-2
Windows
Manual windows 3-40
Power windows 3-37
Windscreen Washer 4-74
Windscreen Wipers 4-72
Winter Driving 3-50

Wiper
Replacing Rear Window Wiper Blade (Hatchback) 6-36
Replacing Windscreen Wiper Blades 6-33

MEMO

8EQ7

Form No. 8EQ7-EE-15D_4

欧州(EC/UK)/一般(L/R)　英

Printed in Europe