SUZUKI 2008

SX4

OWNER'S MANUAL

Keep With Vehicle At All Times.
Contains Important Information
On Safety, Operation & Maintenance.

SUZUKI
Caring for Customers

Part No. 99011-80J21-03E
June, 2007 C 英

Downloaded from www.Manualslib.com manuals search engine

This owner's manual applies to the SX4/SX4 SEDAN series:

SX4

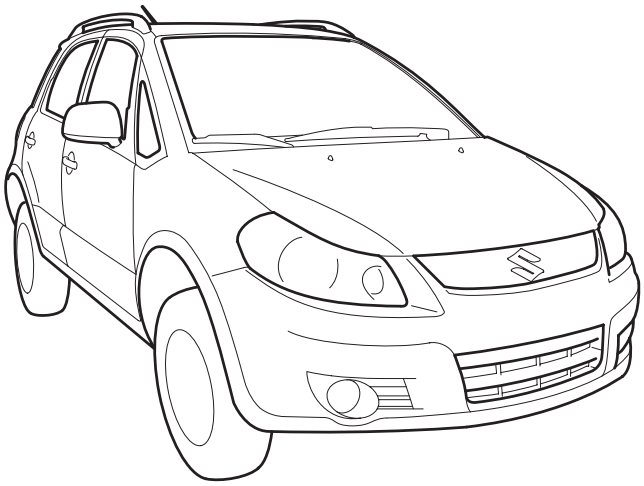

SX4 SEDAN

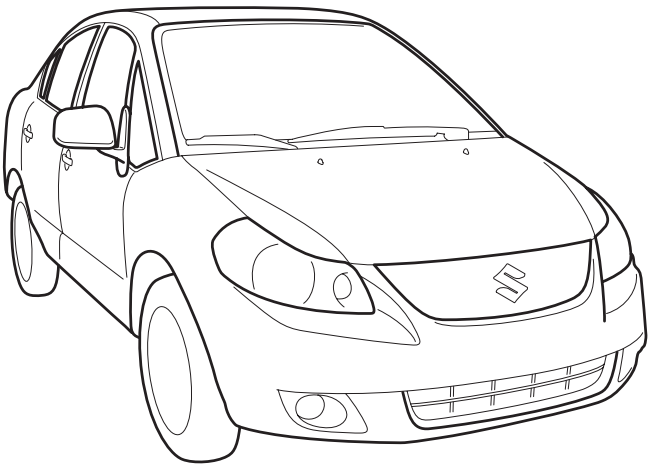

80JC001

NOTE: The illustrated models are examples of the SX4/SX4 SEDAN series.

© COPYRIGHT SUZUKI MOTOR CORPORATION 2007

Downloaded from www.Manualslib.com manuals search engine

INTRODUCTION

Thank you for choosing SUZUKI and welcome to our growing family. Your choice was a wise one; SUZUKI products are a great value that will give you years of driving pleasure.

This Owner's Manual was prepared to help you have a safe, enjoyable, and trouble-free experience with your SUZUKI. In it you will learn about the vehicle's operation, its safety features and maintenance requirements. Please read it carefully before operating your vehicle. Afterwards, keep this Manual in the glove box for future reference.

Should you resell the vehicle, please leave this Manual with it for the next owner.

In addition to the Owner's Manual, the other booklets provided with your SUZUKI explain the vehicle's warranties. We recommend you read them as well to familiarize yourself with this important information.

When planning the regular scheduled maintenance of your SUZUKI, we recommend you visit your local SUZUKI dealership. Their factory-trained technicians will provide the best possible service and use only genuine SUZUKI parts and accessories.

SUZUKI MOTOR CORPORATION

Downloaded from www.Manualslib.com manuals search engine

SERVICE STATION GUIDE

1. Fuel (see section 1)
2. Engine hood (see section 5)
3. Tire changing tools (see section 5)
4. Engine oil dipstick <Yellow> (see section 9)
5. Automatic transaxle fluid dipstick <Red> (see section 9)
6. Engine coolant (see section 9)
7. Windshield washer fluid (see section 9)
8. Battery (see section 9)
9. Tire pressure (see tire information label on driver's door lock pillar)
10. Spare tire (see section 9)

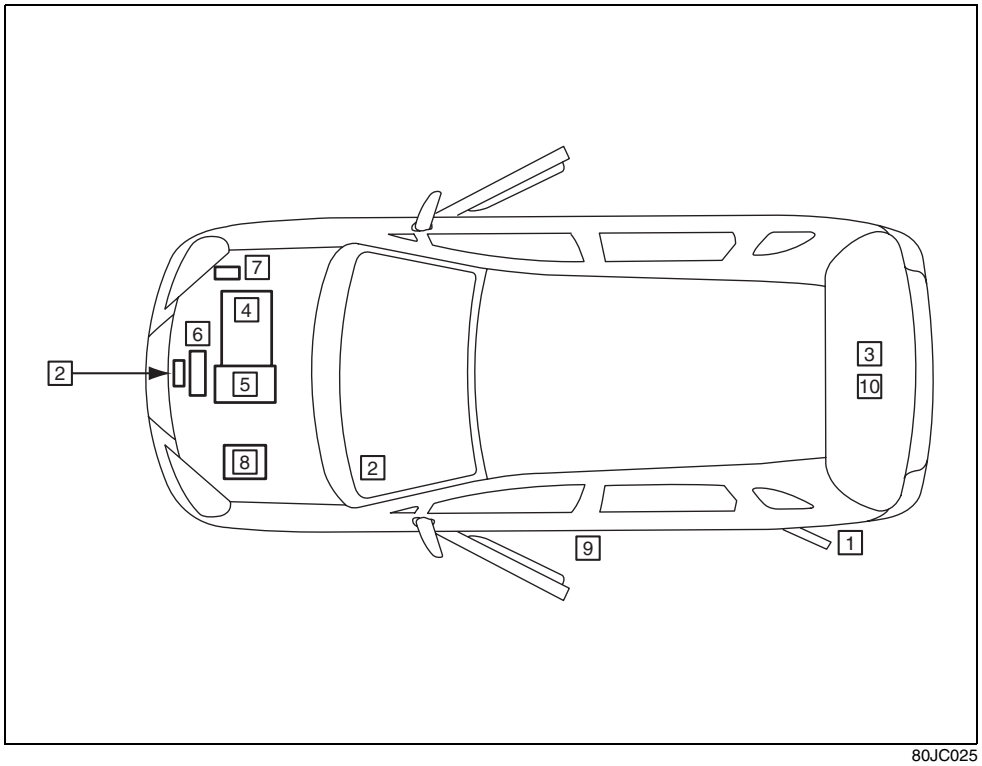

80JC025

Downloaded from www.Manualslib.com manuals search engine

TABLE OF CONTENTS

California Proposition 65 Warning

⚠ WARNING

Engine exhaust, some of its constituents, and certain product components contain or emit chemicals known to the State of California to cause cancer and birth defects or other reproductive harm.

FUEL RECOMMENDATION	1
BEFORE DRIVING	2
STEERING COLUMN CONTROLS	3
INSTRUMENT PANEL	4
OTHER CONTROLS AND EQUIPMENT	5
OPERATING YOUR VEHICLE	6
DRIVING TIPS	7
VEHICLE LOADING AND TOWING	8
INSPECTION AND MAINTENANCE	9
EMERGENCY SERVICE	10
APPEARANCE CARE	11
GENERAL INFORMATION	12
FUSES AND PROTECTED CIRCUITS	13
SPECIFICATIONS	14
INDEX	15

Downloaded from www.Manualslib.com manuals search engine

LOCATION OF WARNING MESSAGES

Read and follow all of the warnings (labels etc.) on your vehicle. Make sure you understand all of them. Keep them on the vehicle. Do not remove the messages for any reason. If a label comes off or the messages become difficult to be read, have it corrected by your SUZUKI dealer.

1. Air bag warning labels (on both sun visors)
2. Passenger seat belt warning label
3. Rear center seat belt warning label
4. Jacking warning label
5. Fuel filler cap message
6. Brake fluid cap message
7. Engine cooling fan warning label
8. Radiator cap warning label
9. Air conditioner warning label
10. Battery label
11. Compact spare tire warning label
12. Rear outboard seat belt warning label
13. Side air bag warning label

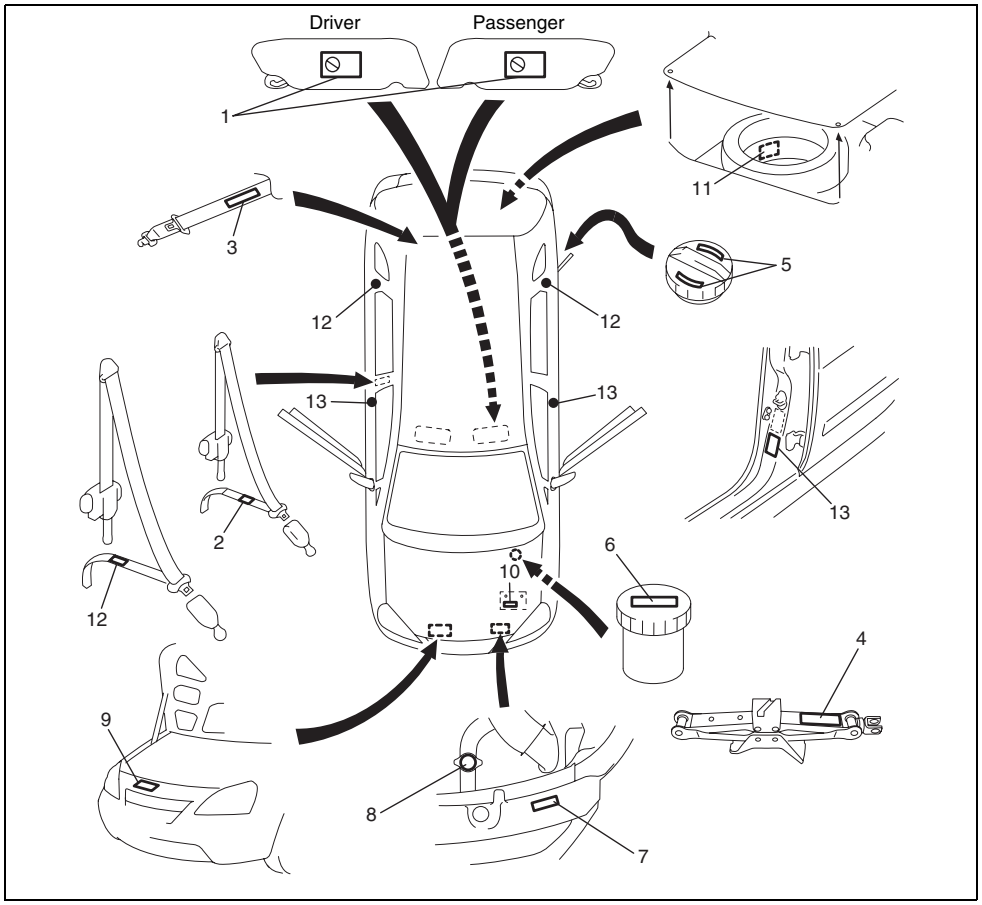

80J054

Downloaded from www.Manualslib.com manuals search engine

FOREWORD

All information in this manual is based on the latest product information available at the time of publication. Due to improvements or other changes, there may be discrepancies between information in this manual and your vehicle.
SUZUKI MOTOR CORPORATION reserves the right to make production changes at any time, without notice and without incurring any obligation to make the same or similar changes to vehicles previously built or sold.

SUZUKI MOTOR CORPORATION believes in conservation and protection of Earth's natural resources.

To that end, we encourage every vehicle owner to recycle, trade in, or properly dispose of, as appropriate, used motor oil, coolant, and other fluids, batteries and tires.

IF YOU HAVE ANY PROBLEMS WITH YOUR SUZUKI:

Please review the New Vehicle Warranty Information booklet supplied with your SUZUKI. Should you have a question or problem regarding the warranty or service of your vehicle, please take the following action:

Consult the Service Manager and the Owner of the Suzuki Automotive Dealership. Explain your problem and ask for their assistance in resolving your problem. The Owner of the dealership is in the very best position to assist you as he or she is vitally concerned with your continued satisfaction.

If you are still in need of additional information, or if you are dissatisfied, request that your dealer arrange a meeting with your District Service Manager.

If, after doing so, you still require further assistance, and you purchased your SUZUKI in the continental United States, please contact the American Suzuki Customer Relations Department by telephone at 1-800-934-0934 or in writing at:

American Suzuki Motor Corporation
Automotive Customer Relations
3251 East Imperial Highway
Brea, CA 92821-6795

If you purchased your SUZUKI in Canada please contact the Suzuki Canada Customer Relations Department by telephone at 1-905-889-2677 extension 2254 or in writing at:

Suzuki Canada Inc.
Customer Relations
100 East Beaver Creek Road
Richmond Hill, On
L4B 1J6

In the event you require assistance related to your SUZUKI, while temporarily travelling in either the United States or Canada, you may wish to contact the Suzuki Customer Relations Department directly of the country in which you are temporarily operating your vehicle.

Please be certain to provide us with the following information: the model, Vehicle Identification Number, mileage, accessories involved, event dates, your concern, and any other comments which you may have. When we receive your correspondence, we will be pleased to contact the Owner of your dealership and assist in resolving your concern.

For owners outside the continental United States, please refer to the distributor's address listed in your Warranty Information booklet.

SUZUKI MOTOR CORPORATION

Downloaded from www.Manualslib.com manuals search engine

IMPORTANT

⚠WARNING/CAUTION/*NOTE*

Please read this manual and follow its instructions carefully. To emphasize special information, the symbol ⚠ and the words **WARNING**, **CAUTION** and *NOTE* have special meanings. Pay special attention to the messages highlighted by these signal words:

⚠ WARNING

Indicates a potential hazard that could result in death or injury.

CAUTION

Indicates a potential hazard that could result in vehicle damage.

NOTE:
Indicates special information to make maintenance easier or instructions clearer.

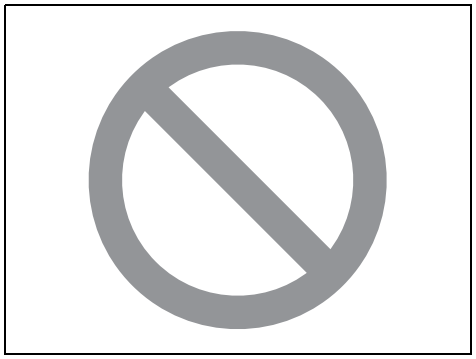

75F135

The circle with a slash in this manual means “Don’t do this” or “Don’t let this happen”.

MODIFICATION WARNING

⚠ WARNING

Do not modify this vehicle. Modification could adversely affect safety, handling, performance or durability and may violate governmental regulations. In addition, damage or performance problems resulting from modification may not be covered under warranty.

CAUTION

Improper installation of mobile communication equipment such as cellular telephones or CB (Citizen’s Band) radios may cause electronic interference with your vehicle’s ignition system, resulting in vehicle performance problems. Consult your SUZUKI dealer or qualified service technician for advice on installing such mobile communication equipment.

Downloaded from www.Manualslib.com manuals search engine

LEAK DETECTION PUMP

NOTE:
Your vehicle has a pump to regularly check the vehicle's evaporative emission control system for leaks. This check is performed approximately five hours after the engine is turned off. During this leak check, you may hear a sound coming from the vehicle for several minutes. This sound is normal and does not indicate a malfunction.

Downloaded from www.Manualslib.com manuals search engine

MEMO

Downloaded from www.Manualslib.com manuals search engine

FUEL RECOMMENDATION

Fuel Recommendation 1-1

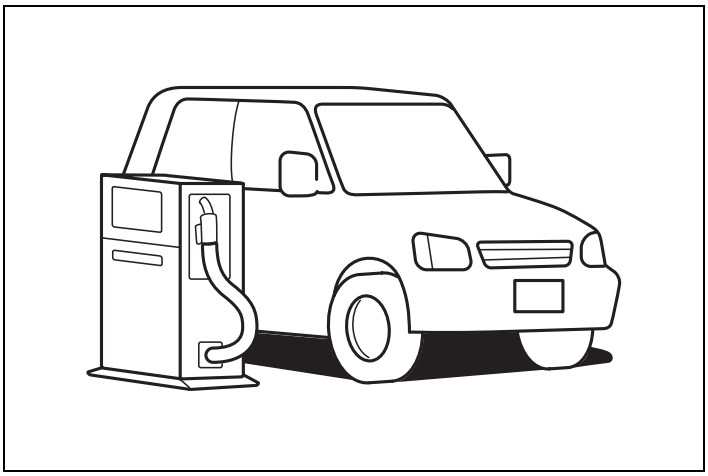

65D394

Downloaded from www.Manualslib.com manuals search engine

FUEL RECOMMENDATION

Fuel Recommendation

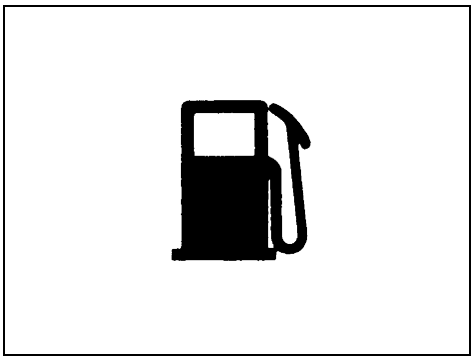

60A004

Your vehicle requires regular unleaded gasoline with a minimum rating of 87 pump octane ((R + M)/2 method). In some areas, the only fuels that are available are oxygenated fuels.

Oxygenated fuels which meet the minimum octane requirement and the requirements described below may be used in your vehicle without jeopardizing the New Vehicle Limited Warranty.

NOTE:
Oxygenated fuels are fuels which contain oxygen-carrying additives such as MTBE or alcohol.

Gasoline Containing MTBE

Unleaded gasoline containing MTBE (methyl tertiary butyl ether) may be used in your vehicle if the MTBE content is not greater than 15%. This oxygenated fuel does not contain alcohol.

Gasoline/Ethanol blends

Blends of unleaded gasoline and ethanol (grain alcohol), also known as gasohol, may be used in your vehicle if the ethanol content is not greater than 10%.

Gasoline/Methanol blends

Fuels containing 5% or less methanol (wood alcohol) may be suitable for use in your vehicle if they contain cosolvents and corrosion inhibitors. Do NOT USE fuels containing more than 5% methanol under any circumstances. Fuel system damage or vehicle performance problems resulting from the use of such fuels are not the responsibility of SUZUKI and may not be covered under the New Vehicle Limited Warranty.

Fuel Pump Labeling

In some states, pumps that dispense oxygenated fuels are required to be labeled for the type and percentage of oxygenate and whether important additives are present. Such labels may provide enough information for you to determine if a particular blend of fuel meets the requirements listed above. In other areas, pumps may not be clearly labeled as to the content or type of oxygenate and additives. If you are not sure that the fuel you intend to use meets these requirements, check with the service station operator or the fuel supplier.

NOTE:
To help clean the air, SUZUKI recommends you use the oxygenated fuels. However, if you are not satisfied with the driveability or fuel economy of your vehicle when you are using an oxygenated fuel, switch back to the regular unleaded gasoline.

CAUTION

Be careful not to spill fuel containing alcohol while refueling. If fuel is spilled on the vehicle body, wipe it up immediately. Fuels containing alcohol can cause paint damage, which is not covered under the New Vehicle Limited Warranty.

Downloaded from www.Manualslib.com manuals search engine

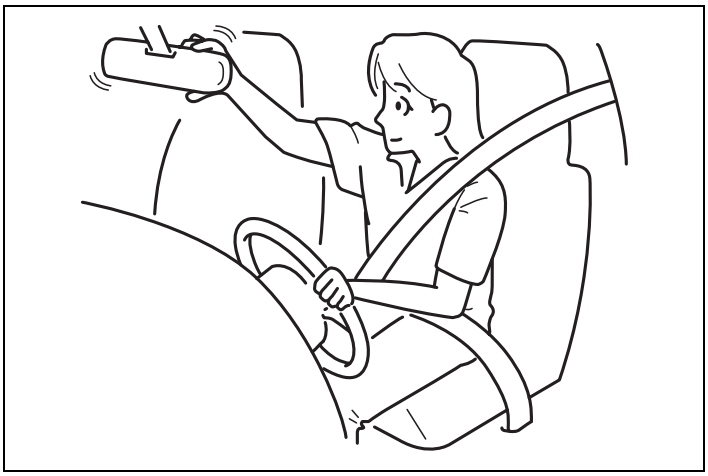

60G404

BEFORE DRIVING

Keys 2-1
Door Locks 2-1
Windows 2-16
Mirrors 2-18
Seat Adjustment 2-19
Head Restraints 2-20
Seat Belts and Child Restraint Systems 2-22
Supplemental Restraint System (air bags) 2-40

Downloaded from www.Manualslib.com manuals search engine

Keys: 8
Door Locks: 3, 5, 8

BEFORE DRIVING

Keys

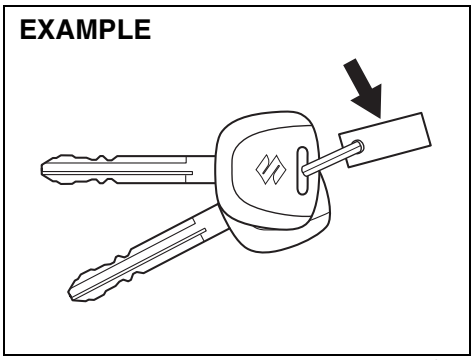

54G489

Your vehicle comes with a pair of identical keys. Keep the spare key in a safe place. One key can open all of the locks on the vehicle.

The key identification number is stamped on a metal tag provided with the keys. Keep the tag in a safe place. If you lose your keys, you will need this number to have new keys made. Write the number below for your future reference.

KEY NUMBER:

Ignition Key Reminder

A buzzer sounds to remind you to remove the ignition key if it is in the ignition switch when the driver's door is opened.

Door Locks

⚠ WARNING

Always lock all doors when driving. Locking the doors helps to prevent occupants from being thrown from the vehicle in the event of an accident. It also helps prevent unintended opening of the doors.

Side Door Locks

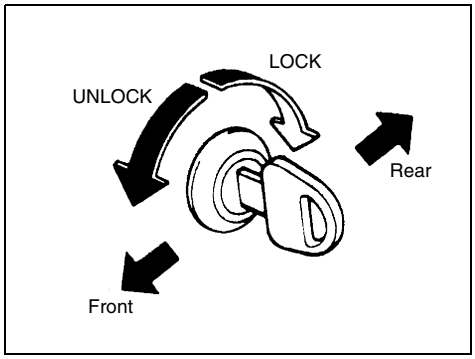

60A009

To lock a front door from outside the vehicle:

- Insert the key and turn the top of the key toward the rear of the vehicle, or
- Turn the lock knob forward, then pull and hold the door handle as you close the door.

To unlock a front door from outside the vehicle, insert the key and turn the top of the key toward the front of the vehicle.

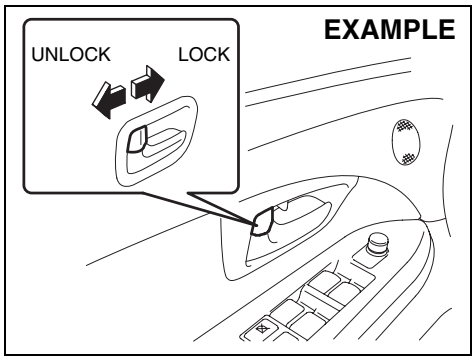

79J021

To lock a door from inside the vehicle, turn the lock knob forward. Turn the lock knob rearward to unlock the door.

To lock a rear door from outside the vehicle, turn the lock knob forward and close the door. You do not need to pull and hold the door handle as you close the door.

Downloaded from www.Manualslib.com manuals search engine

Power Door Locking System

You can lock and unlock all the doors (including the tailgate of SX4) simultaneously by:

- Turning the key in a front door lock, or
- Pushing the power door locking switch located on the driver's side or the front passenger's side door panel.

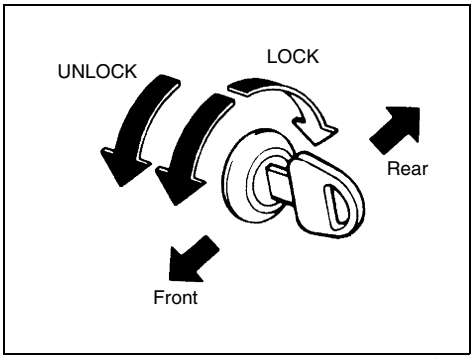

54G294

(when using the key)

To lock all the doors simultaneously, insert the key in a front door lock and turn the top of the key toward the rear of the vehicle once.

To unlock all the doors simultaneously, insert the key in a front door lock and turn the top of the key toward the front of the vehicle twice.

To unlock only one of the front doors, insert the key in that door lock and turn the top of the key toward the front of the vehicle once.

Driver's side

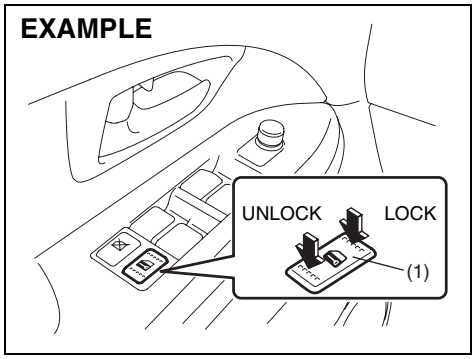

80J036

Front passenger's side

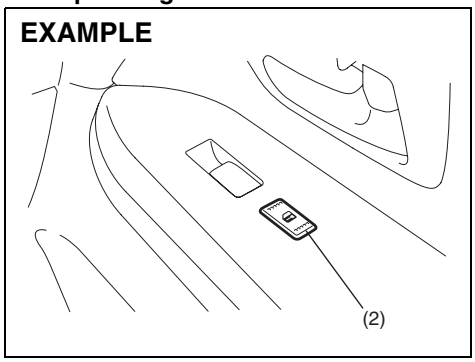

80J016

(when using the power door locking switch)

To lock or unlock all the doors simultaneously, depress the front or rear of the switch (1) or (2), respectively.

Downloaded from www.Manualslib.com manuals search engine

BEFORE DRIVING

Keyless Start System Remote Controller/Keyless Entry System Transmitter

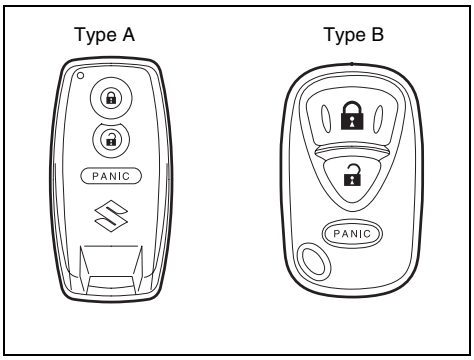

66J111

Your vehicle is equipped with either a keyless start system remote controller (Type A) or a keyless entry system transmitter (Type B). The remote controller has a keyless entry system and a keyless start system. The transmitter has only a keyless entry system. For details, refer to the following explanations.

Keyless Start System Remote Controller (Type A)

The remote controller enables the following operations:

- You can lock or unlock the doors by operating the LOCK/UNLOCK buttons on the remote controller. Refer to the explanation in this section.
- You can lock or unlock the doors by pushing the request switch on the door handle. For details, refer to the explanation in this section.
- You can start the engine without using an ignition key. For details, refer to “Ignition Switch” in the “STEERING COLUMN CONTROLS” section and “Starting the Engine” in the “OPERATING YOUR VEHICLE” section.

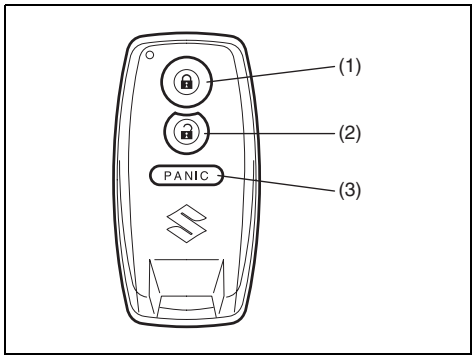

66J114

(1) “LOCK” button
(2) “UNLOCK” button
(3) “PANIC” button

“LOCK” button (1) / “UNLOCK” button (2) function

You can lock or unlock all doors (including the tailgate of SX4) simultaneously by operating the remote controller near the vehicle.

- To lock the doors, push the “LOCK” button (1).
- To unlock the driver’s door, push the “UNLOCK” button (2) once.
- To unlock other doors, wait a second or two, then push the “UNLOCK” button (2) a second time. If you “double-click” too fast, the doors will not unlock.

When the doors are locked, the turn signal lights will flash once.

Downloaded from www.Manualslib.com manuals search engine

When the doors are unlocked:
- The turn signal lights will flash twice.
- If the interior light switch is in the middle position, the interior light will turn on for about 15 seconds and then fade out. If you push in the ignition switch or insert the key during this time, the light will start to fade out immediately.

Be sure the doors are locked after you operate the “LOCK” button. If no door is opened within about 30 seconds after the “UNLOCK” button is operated, the doors will automatically lock again.

NOTE:
- *The maximum operating distance of the remote controller is about 5 m (16 ft.), but this can vary depending on the surroundings, especially near other transmitting devices such as radio towers or CB (Citizen’s Band) radios.*
- *The door locks can not be operated with the remote controller if the ignition switch is in a position other than “LOCK”, or the ignition key is inserted in the ignition switch, or if any door is open.*
  If any door is open, you cannot lock the door by operating the remote controller, however unlock the door.
- *You cannot lock the door unless all of the door are closed completely.*
- *If you lose one of the remote controllers, ask your SUZUKI dealer as soon as possible for a replacement. Be sure to have your dealer program the new remote controller code in your vehicle’s memory so that the old code is erased, or perform the programming procedure yourself according to the instructions in this section.*

“PANIC” button (3) function

This function is to get the attention of others.
Press the “PANIC” button (3) for more than 1 second. The headlights and taillights will blink for about 30 seconds. Also, the horn will sound intermittently for about 30 seconds at the same time.
To cancel the “PANIC” mode, press any button (PANIC, LOCK or UNLOCK) on the remote controller. You can also insert the key in the ignition switch and turn to the “ON” position to cancel the “PANIC” mode.

NOTE:
The “PANIC” button function will not activate when the key is in the ignition switch.

Keyless unlocking/locking using the request switches

SX4

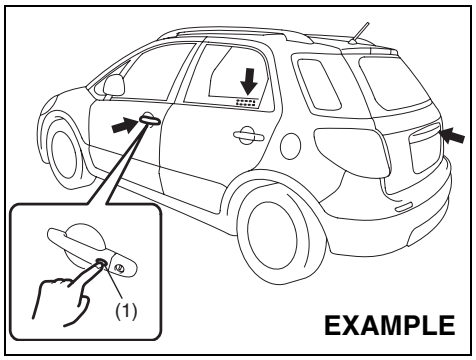

80JC054

SX4 SEDAN

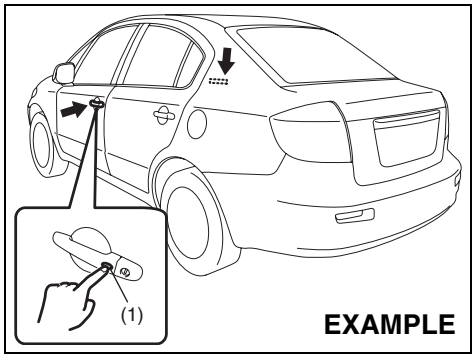

56KN008

Downloaded from www.Manualslib.com manuals search engine

BEFORE DRIVING

When the remote controller is within the operating range described in this section, you can lock or unlock the doors by pushing the request switch (1) on the door handle of the driver's door, front passenger's door or tailgate of SX4.

To lock all doors when all doors are unlocked:
- Push the request switch on one of the door handles once.

The turn signal lights will flash once when the doors are locked.

To unlock a door or all doors:
- Push the request switch on the door handle once to unlock only one door.
- Push the request switch on the door handle twice to unlock all doors.

When the doors are unlocked:
- The turn signal lights will flash twice.
- If the interior light switch is in the middle position, the interior light will turn on for about 15 seconds and then fade out. If you push in the ignition switch or insert the key during this time, the light will start to fade out immediately.

Be sure the doors are locked after you operate the request switch to lock the doors.

NOTE:
- *The door locks can not be operated by the request switch under the following conditions:*
  - *If any door is open or is not completely closed.*
  - *If the ignition switch is in a position other than "LOCK".*
  - *If the ignition key is inserted in the ignition switch.*
- *If no doors are opened within about 30 seconds after unlocking the doors by pushing the request switch, the doors will be locked again automatically.*

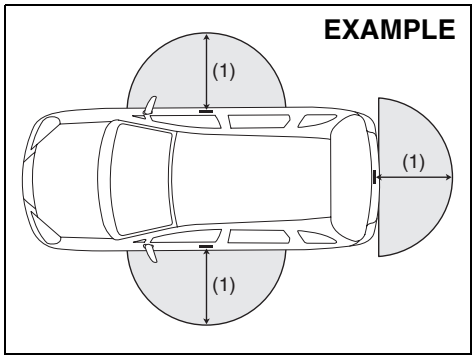

80J056

(1) 80 cm (2 1/2 feet)

When the remote controller is within approximately 80 cm (2 1/2 feet) from a front door handle or the tailgate switch, you can lock or unlock the doors by pushing the request switch.

NOTE:
- *If the remote controller is outside the request switch operating range described above, you will not be able to operate the request switch.*
- *If the battery of the remote controller runs down or there are strong radio waves or noise, the request switch operating range may be reduced or the remote controller may be inoperative.*
- *If the remote controller is too close to the door glass, the request switches may not operate.*
- *If a spare remote controller is in the vehicle, the request switches may not operate normally.*
- *The remote controller will only operate a request switch if it is within the switch's operating range. For example, if the remote controller is within the operating range of the driver's door request switch but not the front passenger's door request switch or the tailgate request switch, the driver's door switch can be operated but the front passenger's door switch or tailgate switch can not be operated.*

Downloaded from www.Manualslib.com manuals search engine

CAUTION

The remote controller is a sensitive electronic instrument. To avoid damaging the remote controller:
- **Do not expose it to impacts, moisture or high temperature such as by leaving it on the dashboard under direct sunlight.**
- **Keep the remote controller away from magnetic objects such as a television.**

NOTE:
The keyless start system may not function correctly in certain environments or under certain operating conditions such as the following:
- *When there are strong signals coming from a television, power station or a cellular phone.*
- *When the remote controller is in contact with or covered by a metal object.*
- *When a radio wave type remote keyless entry is used nearby.*
- *When the remote controller is placed near an electronic device such as personal computer.*

Some additional precautions you should take and information you should be aware of are:
- *Make sure the ignition key is stowed in the remote controller. If the remote controller becomes unreliable, you will not be able to lock or unlock the doors or start the engine.*
- *Be sure that the driver always carries the remote controller.*
- *If you lose one of the remote controllers, ask your SUZUKI dealer as soon as possible for a replacement. Be sure to have your dealer program the new remote controller code in your vehicle's memory so that the old code is erased, or perform the programming procedure yourself according to the instructions in this section.*
- *You can use up to four remote controllers and ignition keys for your vehicle. Ask your SUZUKI dealer for details.*
- *The battery life of the remote controller is about two years, but it can vary depending on usage conditions.*

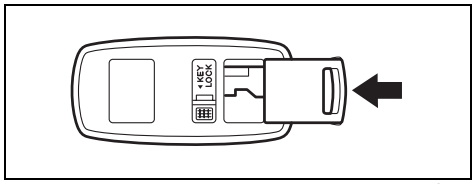

80JC026

To stow the ignition key into the remote controller, push the key in the remote controller until you hear a click.

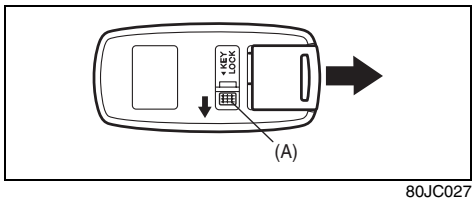

80JC027

To remove the key from the remote controller, push the button (A) in the direction of the arrow and pull the key out from the remote controller.

Downloaded from www.Manualslib.com manuals search engine

BEFORE DRIVING

Reminder function

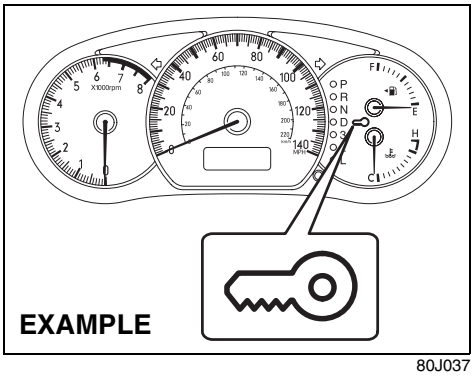

80J037

If the remote controller is not in the vehicle under the following conditions, a buzzer sounds intermittently for about 2 seconds and the keyless start system indicator light on the instrument cluster blinks in red:

- When the vehicle speed is over 10 km/h (6 mph).
- When one or more doors are opened and all of the doors are later closed with the ignition switch in a position other than “LOCK”.

The red indicator light will turn off within several seconds after the remote controller is returned to an area of the vehicle other than the rear luggage area.

If the remote controller is left in the vehicle and you lock the driver’s door or front passenger’s door as described below, the door will be automatically unlocked.

- If you open the driver’s door and lock the door by turning the lock knob forward or pushing the power door locking switch, the driver’s door will be automatically unlocked.
- If you open a door other than the driver’s door and lock the front passenger’s door by turning the lock knob forward or pushing the power door locking switch, the front passenger’s door will be automatically unlocked.

For SX4 SEDAN, if you close the trunk lid with the remote controller left in the trunk with all the doors locked, the trunk will be automatically unlatched.

NOTE:

- *The reminder will not operate when the remote controller is on the instrument panel, in the glove box, in the door pocket, in the sun visor or on the floor etc.*
- *Be sure that the driver always carries the remote controller.*
- *Do not leave the remote controller in the vehicle when leaving the vehicle.*

Replacement of the battery

If the remote controller becomes unreliable, replace the battery.

To replace the battery of the remote controller:

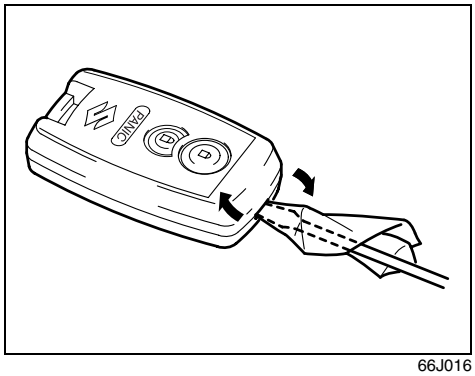

66J016

1) Insert a flat blade screw driver covered with a soft cloth in the slot of the remote controller and pry it open.

Downloaded from www.Manualslib.com manuals search engine

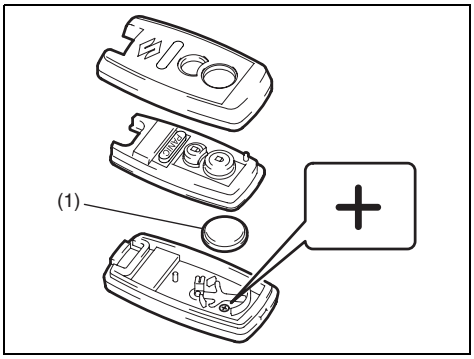

66J017

2) Replace the battery (1) (Lithium disc type CR2032 or equivalent) so its + terminal faces the bottom of the case as shown in the illustration.
3) Close the remote controller firmly.
4) Make sure the door locks can be operated with the remote controller.
5) Dispose of the used battery properly according to applicable rules or regulations. Do not dispose of lithium batteries with ordinary household trash.

⚠ WARNING

Swallowing a lithium battery may cause serious internal injury. Do not allow anyone to swallow a lithium battery. Keep lithium batteries away from children and pets. If swallowed, contact a physician immediately.

CAUTION

The transmitter/remote controller is a sensitive electronic instrument. To avoid damaging it, do not expose it to dust or moisture or tamper with internal parts.

Programming/erasing the remote controller code yourself

Your new vehicle was originally equipped with two remote controllers.

If you have lost one of the remote controllers, you should change the remote controller code in your vehicle's memory as soon as possible for security. If you purchase additional remote controllers, the new remote controllers need to be programmed into your vehicle's memory. You can perform this yourself by using the following procedure:

NOTE:
- *You can program up to four remote controller codes into your vehicle's memory. The four codes may be the same or different.*
- *If you try to program a fifth code, the four remote controller codes that are programmed will be cleared automatically.*
- *If you program a new remote controller code, all of the old remote controller codes that are in your vehicle's memory will be erased automatically. When you program a new remote controller, you should reprogram any additional remote controllers at the same time.*
- *To purchase new remote controllers, see your SUZUKI dealer.*
- *Before you begin programming, have all of your remote controllers available.*

To program a new remote controller

1) Close all the doors of the vehicle.
2) Sit in the driver's seat and confirm that the driver's door is unlocked.
3) Insert the key into the ignition switch.
4) Complete steps 1 through 6 described below within 25 seconds after step 3).

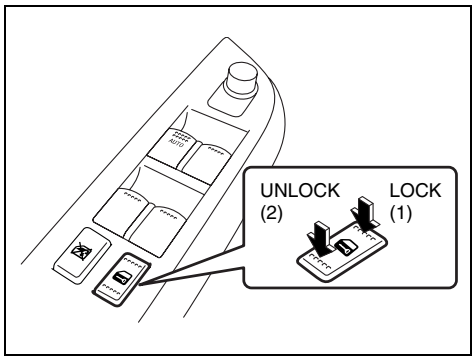

64J004

1. Push the power door locking switch of the driver's door to the lock position and then push it to the unlock position.
2. Repeat step 1 two more times.

Downloaded from www.Manualslib.com manuals search engine

3. Push the power door locking switch of the driver's door to the lock position.
4. Remove the key from the ignition switch and then insert it again.
5. Repeat step 4 three more times.
6. To start the engine, turn the ignition switch to the "START" position.
   Wait for 3 seconds.
7. Proceed to step 5) within 60 seconds after the engine has started.

NOTE:
You cannot program the remote controller if you don't complete steps 1 through 6 within 25 seconds.
You cannot program the remote controller if you do not proceed to step 5) within 60 seconds after the engine has started.

5) Turn the ignition switch to the "LOCK" position.
   A buzzer will sound twice and the door lock switch will be activated from the lock position to the unlock position automatically.
6) Press the "LOCK", "UNLOCK" or "PANIC" button on the remote controller.
   A buzzer will sound twice and the door lock switch will be activated from the lock position to the unlock position automatically.
   If you want to program an additional remote controller, repeat the procedure of step 6) using the additional remote controller.

NOTE:
Complete step 6) within 30 seconds.
You can program up to four remote controllers.

7) To complete programming, remove the key from the ignition switch or turn the ignition switch to the "ON" position.
8) Make sure that the keyless start system and keyless entry system operate properly by operating each remote controller.

If you cannot operate the keyless start system and/or keyless entry system, repeat this programming procedure again.
If you still cannot operate the systems, see your SUZUKI dealer.

To change the old remote controller codes in your vehicle's memory
If you have lost one of the remote controllers, you should change the remote controller codes in your vehicle's memory as soon as possible for security.
To erase the remote controller code(s) in your vehicle's memory, you should program the new remote controller code. The old codes in your vehicle's memory will be erased automatically. If you have more remote controller(s), you must program all of the remote controller codes at the same time. You cannot operate the keyless start system and keyless entry system using any remote controller that is not programmed at the same time.
For details on how to program, refer to the programming procedure in this section.
When you complete programming, make sure that the keyless start system and keyless entry system operate properly by operating each remote controller.

Downloaded from www.Manualslib.com manuals search engine

1. For USA
This device complies with Part 15 of the FCC Rules. Operation is subject to the following two conditions:
1) This device may not cause harmful interference, and
2) This device must accept any interference received, including interference that may cause undesired operation.

NOTE:
Changes or modifications not expressly approved by the party responsible for compliance could void the user's authority to operate the equipment.

2. For Canada
This device complies with Industry Canada Standard RSS-210. Operation is subject to the following two conditions:
1) This device may not cause interference, and
2) This device must accept any interference, including interference that may cause undesired operation of the device.

The term "IC:" before the certification/registration number only signifies that the Industry Canada technical specifications were met.

Keyless Entry System Transmitter (Type B)

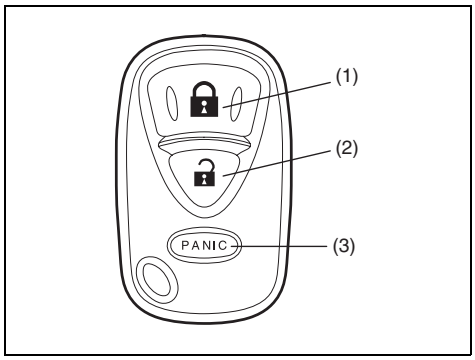

52D209

(1) "LOCK" button
(2) "UNLOCK" button
(3) "PANIC" button

"LOCK" button (1) / "UNLOCK" button (2) function
You can lock or unlock all doors (including the tailgate of SX4) simultaneously by operating the transmitter near the vehicle.

- To lock the doors, push the "LOCK" button (1).
- To unlock the driver's door, push the "UNLOCK" button (2) once.
- To unlock other doors, wait a second or two, then push the "UNLOCK" button (2) a second time. If you "double-click" too fast, the doors will not unlock.

When the doors are locked, the turn signal lights will flash once.

When the doors are unlocked:
- The turn signal lights will flash twice.
- If the interior light switch is in the middle position, the interior light will turn on for about 15 seconds and then fade out. If you insert the key into the ignition switch during this time, the light will start to fade out immediately.

Be sure the doors are locked after you operate the "LOCK" button. If no door is opened within about 30 seconds after the "UNLOCK" button is operated, the doors will automatically lock again.

NOTE:
- *The maximum operating distance of the keyless entry system transmitter is about 5 m (16 ft.), but this can vary depending on the surroundings, especially near other transmitting devices such as radio towers or CB (Citizen's Band) radios.*
- *The door locks can not be operated with the transmitter, if the ignition key is inserted in the ignition switch.*
- *If you lose one of the transmitters, ask your SUZUKI dealer as soon as possible for a replacement. Be sure to have your dealer program the new transmitter code in your vehicle's memory so that the old code is erased, or perform the programming procedure yourself according to the instructions in this section.*

Downloaded from www.Manualslib.com manuals search engine

BEFORE DRIVING

CAUTION

The transmitter is a sensitive electronic instrument. To avoid damaging the transmitter:
- **Do not expose it to impacts, moisture or high temperature such as by leaving it on the dashboard under direct sunlight.**
- **Keep the transmitter away from magnetic objects such as a television.**

"PANIC" button (3) function
This function is to get the attention of others.
Press the "PANIC" button (3) for more than 1 second. The headlights and taillights will blink for about 30 seconds. Also, the horn will sound intermittently for about 30 seconds at the same time.
To cancel the "PANIC" mode, press any button (PANIC, LOCK or UNLOCK) on the transmitter. You can also insert the key in the ignition switch and turn to the "ON" position to cancel the "PANIC" mode.

NOTE:
The "PANIC" button function will not activate when the key is in the ignition switch.

Replacement of the battery
If the transmitter becomes unreliable, replace the battery.

To replace the battery of the transmitter:

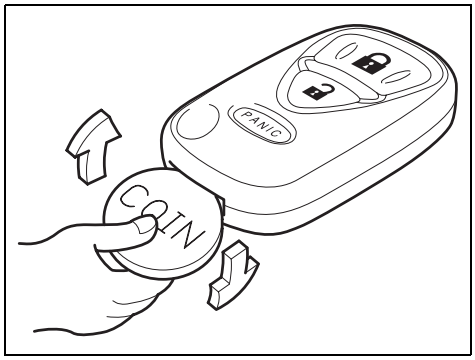

52D210

1) Put the edge of a coin or a flat blade screw driver in the slot of the transmitter and pry it open.

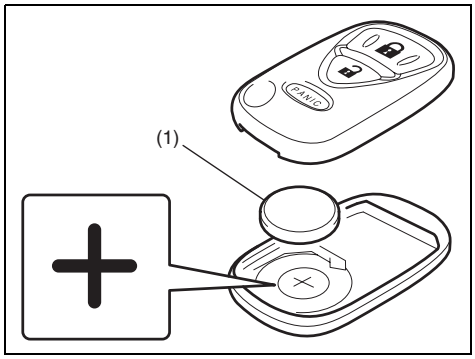

52D211

2) Replace the battery (1) (Lithium disc-type CR2025 or equivalent) so its + terminal faces the "+" mark of the transmitter.
3) Close the transmitter firmly.
4) Make sure the door locks can be operated with the transmitter.
5) Dispose of the used battery properly according to applicable rules or regulations. Do not dispose of lithium batteries with ordinary household trash.

⚠ WARNING

Swallowing a lithium battery may cause serious internal injury. Do not allow anyone to swallow a lithium battery. Keep lithium batteries away from children and pets. If swallowed, contact a physician immediately.

Downloaded from www.Manualslib.com manuals search engine

CAUTION

The transmitter/remote controller is a sensitive electronic instrument. To avoid damaging it, do not expose it to dust or moisture or tamper with internal parts.

Programming/removing a transmitter code yourself

Your new vehicle was originally equipped with two transmitters.

If you have lost one of the transmitters, you should change the transmitter code in your vehicle's memory as soon as possible for security. If you purchase additional transmitters, the new transmitters need to be programmed into your vehicle's memory. You can perform this yourself by using the following procedure:

NOTE:

- *You can program up to three transmitter codes into your vehicle's memory. The three codes may be the same or different.*
- *If you try to program a fourth code, the oldest code will be cleared automatically.*
- *To purchase new transmitters, see your SUZUKI dealer.*
- *Before you begin programming, have all of your transmitters available.*

To program a new transmitter

1) Confirm that all the doors are closed and the ignition key is out of the ignition switch.
2) Open the driver's door.
3) Insert the key, turn the ignition switch to the "ON" position, turn the ignition switch to the "LOCK" position and remove the key within 10 seconds.

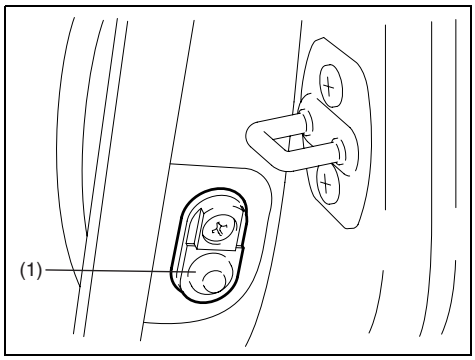

66J018

4) Push and release the driver's door switch (1) 3 times, insert the key, and turn the ignition switch to the "ON" position within 20 seconds.
5) Turn the ignition switch to the "LOCK" position and remove the key within 10 seconds. All doors will lock/unlock to confirm that this procedure has been properly completed.

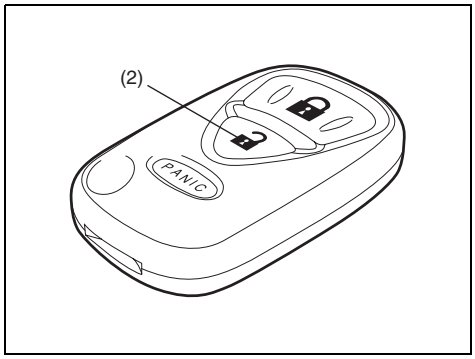

52D212

6) Press the "UNLOCK" button (2) on the transmitter one time within 20 seconds (after step 5). All the doors will lock/unlock to confirm that the procedure has been completed and the transmitter has been programmed.
7) If you want to program an additional transmitter, repeat the procedure from step 1) through step 6).
8) Make sure that the keyless entry system operates properly by operating each transmitter.

Downloaded from www.Manualslib.com manuals search engine

BEFORE DRIVING

To change the old transmitter codes in your vehicle's memory

If you have lost one of the transmitters, you should change the transmitter codes in your vehicle's memory as soon as possible for security.

To remove one of the transmitter codes from your vehicle's memory, first replace all three of the transmitter codes in your vehicle's memory, then program additional transmitters as follows:

1) Program one of your transmitters three times, by repeating the programming procedure shown in this section. This will replace all the old transmitter codes in the vehicle's memory with the code for the transmitter you are using.
2) If you want to program up to two additional transmitters, repeat the programming procedure shown in this section.
3) Make sure that the keyless entry system operates properly by operating each transmitter.

1. For USA

This device complies with Part 15 of the FCC Rules. Operation is subject to the following two conditions:

1) This device may not cause harmful interference, and
2) This device must accept any interference received, including interference that may cause undesired operation.

NOTE:
Changes or modifications not expressly approved by the party responsible for compliance could void the user's authority to operate the equipment.

2. For Canada

This device complies with Industry Canada Standard RSS-210. Operation is subject to the following two conditions:

1) This device may not cause interference, and
2) This device must accept any interference, including interference that may cause undesired operation of the device.

The term "IC:" before the certification/registration number only signifies that the Industry Canada technical specifications were met.

Child Lock System (rear doors)

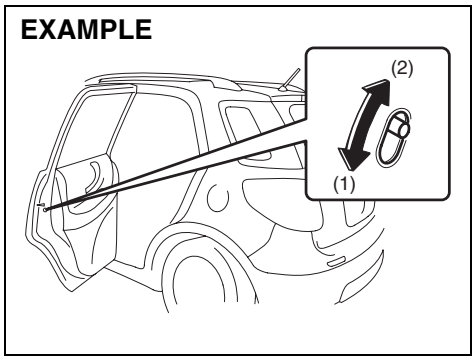

80J091

Each of the rear doors is equipped with a child lock which can be used to help prevent unwanted opening of the door from inside the vehicle. When the lock lever is in the "LOCK" position (1), the rear door can only be opened from outside. When the lock lever is in the "UNLOCK" position (2), the rear door can be opened from inside or outside.

⚠ WARNING

Be sure to place the child lock in the "LOCK" position whenever children are seated in the rear.

Downloaded from www.Manualslib.com manuals search engine

Tailgate (SX4)

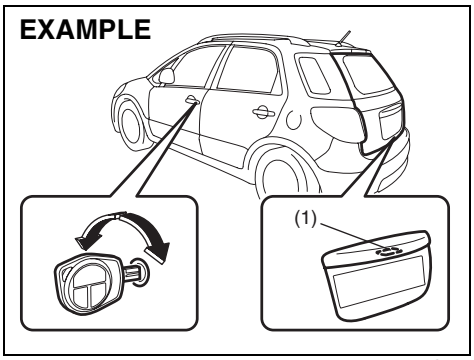

80JC059

(1) Tailgate unlatch switch

You can lock and unlock the tailgate by using the key in the driver's door lock.

To open the tailgate, push and hold the tailgate unlatch switch (1) and lift the tailgate.

NOTE:
When the tailgate is closed incompletely, follow the procedure below:
1) Push the tailgate unlatch switch (1) and open the tailgate a little.
2) After a few seconds, close the tailgate.
3) Make sure that the tailgate is closed completely.

⚠ WARNING

Always make sure that the tailgate is closed and latched securely. Completely closing the tailgate helps prevent occupants from being thrown from the vehicle in the event of an accident. Completely closing it also helps keep exhaust gases from entering the car.

If you can not unlatch the tailgate by pushing the unlatch switch (1) due to a discharged battery or malfunction, follow the procedures below to unlatch the tailgate from inside the vehicle.

1) Fold the rear seat forward for easier access. Refer to "Folding Rear Seats" section for details on how to fold the rear seat forward.

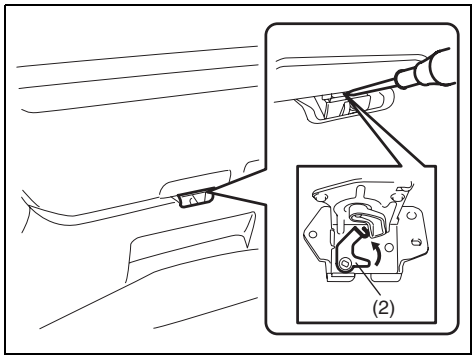

80J092

2) Push open the tailgate from inside by pushing up on the emergency lever (2) using a flat blade screw driver or the jack handle. The tailgate will be latched again by closing the tailgate simply.

If the tailgate can not be unlatched by pushing the unlatch switch (1), have the vehicle inspected by your SUZUKI dealer.

⚠ WARNING

- **To avoid injury, do not use your finger to push the emergency lever.**
- **Make sure there is not anyone near the tailgate when pushing open the tailgate from inside the vehicle.**

Downloaded from www.Manualslib.com manuals search engine

BEFORE DRIVING

Trunk Lid (SX4 SEDAN)

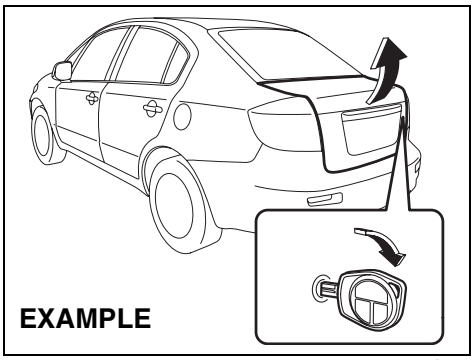

55KS005

If your vehicle is equipped with a trunk lid key lock, you can open the trunk lid by using the key in the trunk lid lock. To open the trunk lid, insert the key and turn it clockwise to unlatch and lift the trunk lid.

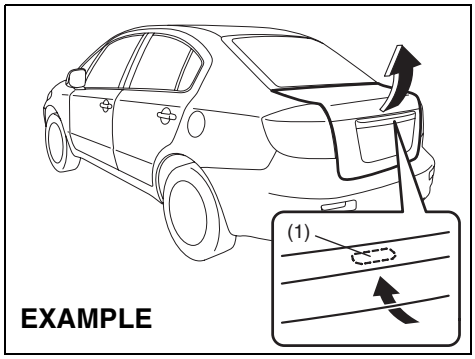

56KN010

If your vehicle is equipped with a trunk lid unlatch switch (1), push and hold the trunk lid unlatch switch (1) and lift the trunk lid to open the trunk lid.

The trunk lid unlatch switch (1) operates when the keyless start system remote controller is within the switch's operating range.
The trunk lid unlatch switch (1) operates only to open the trunk lid.
If you close the trunk lid with the keyless start system remote controller left in the trunk with all the doors locked, the trunk will be automatically unlatched.

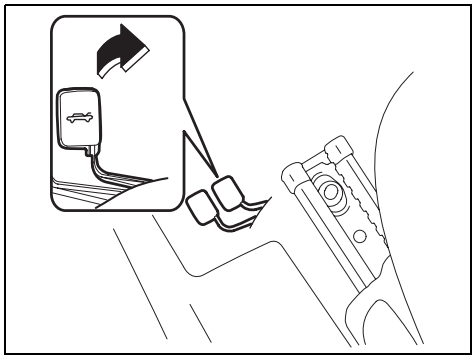

80JC005

You can unlock the lid by pulling the release lever located to the outboard side of the driver's seat.

⚠ WARNING

Always make sure that the trunk lid is closed and latched securely. Otherwise, it may open unexpectedly while driving. Completely closing it also helps keep exhaust gases from entering the car.

Downloaded from www.Manualslib.com manuals search engine

Internal Trunk Release (SX4 SEDAN)

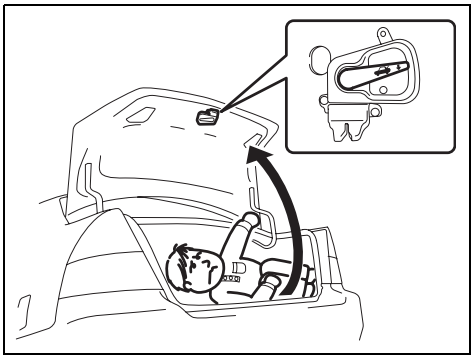

54G297

There is a release lever located inside the trunk, on the rear part of the trunk lid. This lever is for emergency use so that if a person, such as a child, gets trapped in the trunk compartment, he can exit the vehicle. The lever glows in the dark, after a brief exposure to ambient light, so it can be found easily. It is operated by pushing it down in the direction of the arrow.

⚠ WARNING

To help avoid situations where someone might get trapped in the trunk, keep your vehicle locked when unattended, and do not allow anyone to play in the trunk.

Windows

Power Window Controls

Driver's side

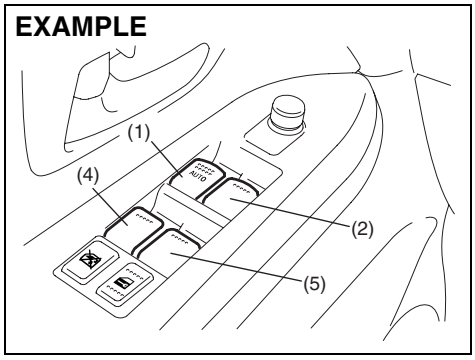

79J028

The power windows can only be operated when the ignition switch is in the "ON" position.

The driver's door has switches (1), (2), (4), (5), to operate the driver's window, the front passenger's window, the rear left window and the rear right window, respectively.

Passenger's door

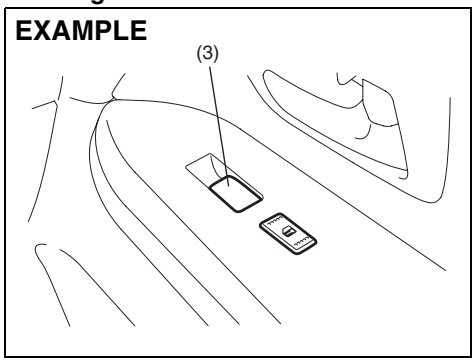

80J018

The passenger's door only has a switch to operate the passenger's window (3).

Downloaded from www.Manualslib.com manuals search engine

BEFORE DRIVING

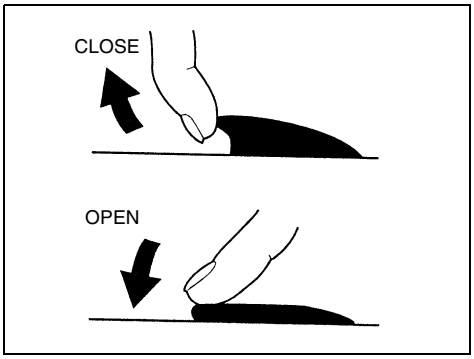

81A009

To open a window, push the top part of the switch and to close a window lift up the top part of the switch.

The driver's window has an auto-down feature for added convenience (at toll booths or drive-through restaurants, for example). This means you can open the window without holding the window switch in the "Down" position. Press the driver's window switch completely down and release it. To stop the window before it reaches the bottom, pull the switch up briefly.

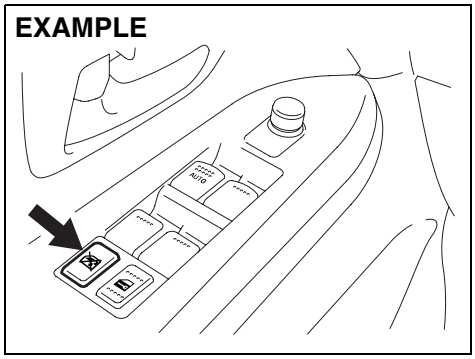

79J031

The driver's door also has a lock switch for the passenger's window. When you push in the lock switch, the passenger's window can not be raised or lowered by operating any of the switches (2), (3), (4) or (5). To restore normal operation, release the lock switch by pushing the switch again.

⚠ WARNING

- **You should always lock the passenger's window operation when there are children in the vehicle. Children can be seriously injured if they get part of their body caught by the window during operation.**

(Continued)

⚠ WARNING

(Continued)

- **To avoid injuring an occupant by window entrapment, be sure no part of the occupant's body such as hands or head is in the path of the electric windows when closing them.**
- **Always remove the ignition key when leaving the vehicle even if a short time. Also do not leave children alone in a parked vehicle. Unattended children could use the electric window switches and get trapped by the window.**

Downloaded from www.Manualslib.com manuals search engine

EXAMPLE

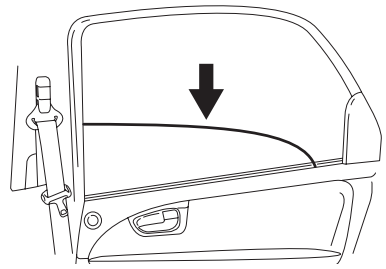

52LM012

NOTE:
The rear door windows are not designed to open fully. They can be opened about 2/3 of the way down.

NOTE:
If you drive with one of the rear windows open, you may hear a loud sound caused by air vibration. To reduce the sound, open the driver's or front passenger's window, or narrow the rear window opening.

Mirrors

Inside Rearview Mirror

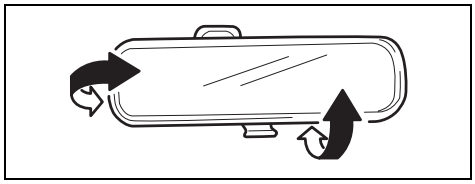

65D410

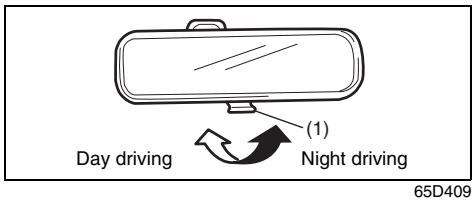

65D409

You can adjust the inside rearview mirror by hand so as to see the rear of your vehicle in the mirror. To adjust the mirror, set the selector tab (1) to the day position, then move the mirror up, down or sideways by hand to obtain the best view.

When driving at night, you can move the selector tab to the night position to reduce glare from the headlights of vehicles behind you.

⚠ WARNING

- **Always adjust the mirror with the selector set to the day position.**
- **Only use the night position if it is necessary to reduce glare from the headlights of vehicles behind you. Be aware that in this position you may not be able to see some objects that could be seen in the day position.**

Downloaded from www.Manualslib.com manuals search engine

BEFORE DRIVING

Outside Rearview Mirrors

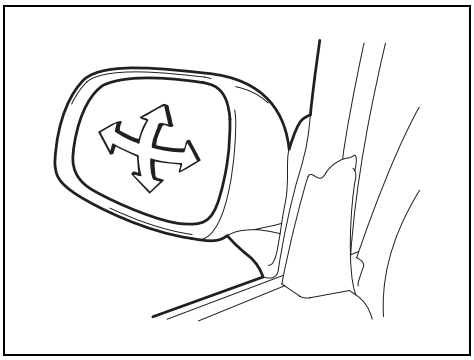

79J033

Adjust the outside rearview mirrors so you can just see the side of your vehicle in the mirrors.

The passenger's side mirror is a convex (curved surface) mirror. Objects seen in this mirror will look smaller and appear farther away than when seen in a flat mirror.

⚠ WARNING

Be careful when judging the size or distance of a vehicle or other object seen in the side convex mirror. Be aware that objects look smaller and appear farther away than when seen in a flat mirror.

Power Mirror Control (if equipped)

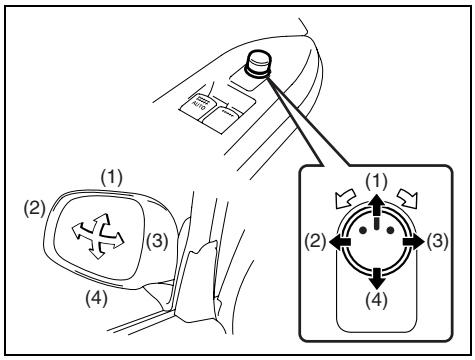

79J034

The switch to control the power rearview mirrors is located on the driver's door panel. You can adjust the mirrors when the ignition switch is in the "ACC" or "ON" position. To adjust the mirrors:

1) Move the selector switch to the left or right to select the mirror you wish to adjust.
2) Press the outer part of the switch that corresponds to the direction you wish to move the mirror.
3) Return the selector switch to the center position to help prevent unintended adjustment.

Seat Adjustment

⚠ WARNING

Never attempt to adjust the driver's seat or seatback while driving. The seat or seatback could move unexpectedly, causing loss of control. Make sure that the driver's seat and seatback are properly adjusted before you start driving.

⚠ WARNING

To avoid excessive seat belt slack, which reduces the effectiveness of the seat belts as a safety device, make sure that the seats are adjusted before the seat belts are fastened.

Downloaded from www.Manualslib.com manuals search engine

Adjusting Seat Position

Front seat

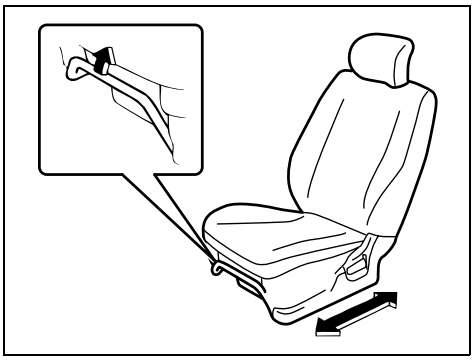

80J093

The adjustment lever for each front seat is located under the front of the seat. To adjust the seat position, pull up on the adjustment lever and slide the seat forward or rearward. After adjustment, try to move the seat forward and rearward to ensure that it is securely latched.

Adjusting Seatbacks

Front seat

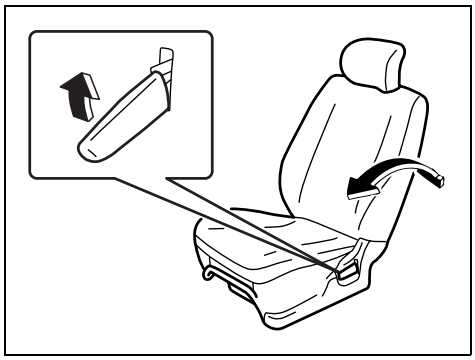

80J094

To adjust the seatback angle of front seats, pull up the lever on the outboard side of the seat, move the seatback to the desired position, and release the lever to lock the seatback in place. After adjustment, try moving the seatback to make sure it is securely locked.

⚠ WARNING

All seatbacks should always be in an upright position when driving, or seat belt effectiveness may be reduced. Seat belts are designed to offer maximum protection when seatbacks are in the upright position.

Head Restraints

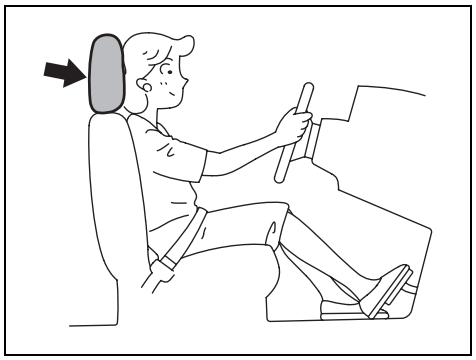

80J001

Head restraints are designed to help reduce the risk of neck injuries in case of an accident.

Adjust the head restraint to the position which places the center of the head restraint closest to the top of your ears. If this is not possible for very tall passengers, adjust the head restraint as high as possible.

⚠ WARNING

- **Never drive the vehicle with the head restraints removed.**
- **Do not attempt to adjust the head restraint while driving.**

Downloaded from www.Manualslib.com manuals search engine

BEFORE DRIVING

Front

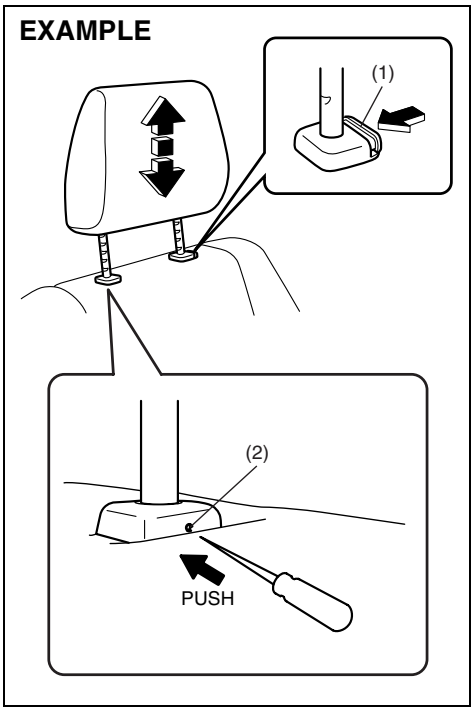

66J150

To raise the head restraint, pull upward on the restraint until it clicks. To lower the restraint, push down on the restraint while holding in the release knob (1). If a head restraint must be removed (for cleaning, replacement, etc.), use the following procedure.

1) Insert a sharp-pointed tool into the small hole (2). Push the tip into the hole (2) and hold it while pushing in the release knob (1).
2) Pull the head restraint all the way out while pushing the release knob (1) and holding the tip in the hole (2).

NOTE:
It may be necessary to recline the seatback to provide enough overhead clearance to remove the head restraint.

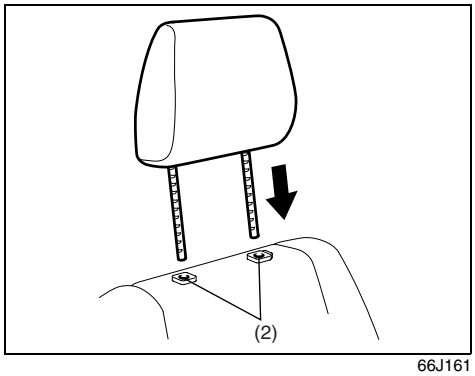

66J161

To reinstall the head restraint, insert the head restraint bars into the holes (2) and push the head restraint down.

Rear

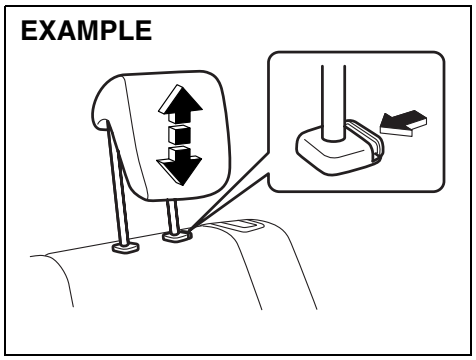

64J023

To raise the rear head restraint, pull upward on the restraint until it clicks. To lower the restraint, push down on the restraint while holding in the release knob. If a head restraint must be removed (for cleaning, replacement, etc.), push in the release knob and pull the head restraint all the way out.

When installing a child restraint system, raise the head restraint to the most upper position.

For SX4 SEDAN, if the distance between the child restraint system and the anchor bracket is too close to properly tighten the child restraint top strap, lower the head restraint to the lowest position and connect the top strap to the anchor bracket by passing it over the top of the head restraint.

Downloaded from www.Manualslib.com manuals search engine

NOTE:
It may be necessary to recline the seatback to provide enough overhead clearance to remove the head restraint.

Seat Belts and Child Restraint Systems

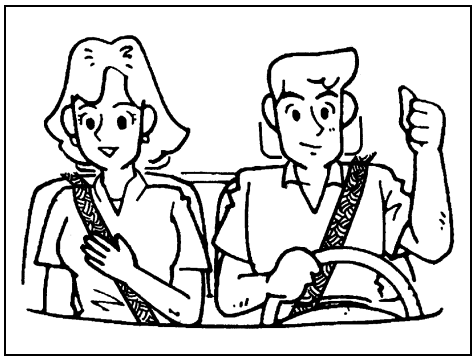

65D231

⚠ WARNING

An air bag supplements, or adds to, the frontal crash protection offered by seat belts. The driver and all passengers must be properly restrained by wearing seat belts at all times, whether or not an air bag is mounted at their seating position, to minimize the risk of severe injury or death in the event of a crash.

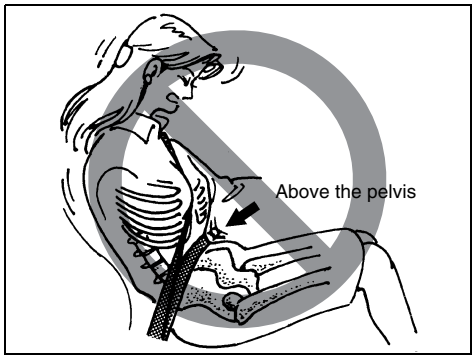

65D606

⚠ WARNING

- **Never allow persons to ride in the cargo area of a vehicle. In the event of an accident, there is a much greater risk of injury for persons who are not riding in a seat with their seat belt securely fastened.**
- **Seat belts should always be adjusted as follows:**
  - **the lap portion of the belt should be worn low across the pelvis, not across the waist.**
  - **the shoulder straps should be worn on the outside shoulder only, and never under the arm.**
  - **the shoulder straps should be away from your face and neck, but not falling off your shoulder.**

(Continued)

Downloaded from www.Manualslib.com manuals search engine

BEFORE DRIVING

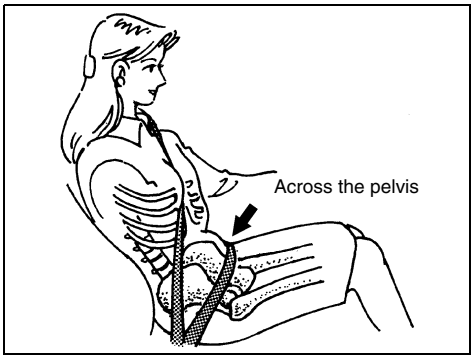

65D201

⚠ WARNING

(Continued)

- **Seat belts should never be worn with the straps twisted and should be adjusted as tightly as is comfortable to provide the protection for which they have been designed. A slack belt will provide less protection than one which is snug.**

(Continued)

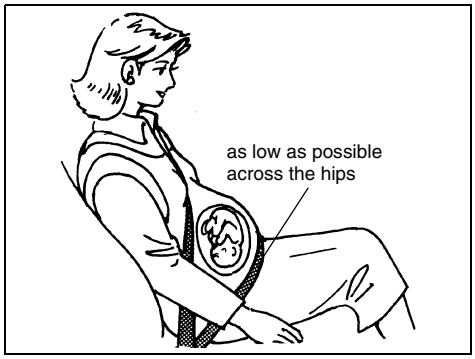

65D199

⚠ WARNING

(Continued)

- **Pregnant women should use seat belts, although specific recommendations about driving should be made by the woman's medical advisor. Remember that the lap portion of the belt should be worn as low as possible across the hips, as shown in the diagram.**
- **Make sure that each seat belt buckle is inserted into the proper buckle catch. It is possible to cross the buckles in the rear seat.**

(Continued)

⚠ WARNING

(Continued)

- **Do not wear your seat belt over hard or breakable objects in your pockets or on your clothing. If an accident occurs, objects such as glasses, pens, etc. under the seat belt can cause injury.**
- **Never use the same seat belt on more than one occupant and never attach a seat belt over an infant or child being held on an occupant's lap. Such seat belt use could cause serious injury in the event of an accident.**
- **Periodically inspect seat belt assemblies for excessive wear and damage. Seat belts should be replaced if webbing becomes frayed, contaminated, or damaged in any way. It is essential to replace the entire seat belt assembly after it has been worn in a severe impact, even if damage to the assembly is not obvious.**
- **Children age 12 and under should ride properly restrained in the rear seat, if equipped.**

(Continued)

Downloaded from www.Manualslib.com manuals search engine

⚠ WARNING

(Continued)

- **Infants and small children should never be transported unless they are properly restrained. Restraint systems for infants and small children can be purchased commercially and should be used. Make sure that the system you purchase meets Federal Motor Vehicle Safety Standards. Read and follow all the directions provided by the manufacturer.**
- **Avoid contamination of seat belt webbing by polishes, oils, chemicals and particularly battery acid. Cleaning may safely be carried out using mild soap and water.**
- **For children, if the shoulder belt irritates the neck or face, move the child closer to the center of the vehicle.**
- **All seatbacks should always be in an upright position when driving, or seat belt effectiveness may be reduced. Seat belts are designed to offer maximum protection when seatbacks are in the upright position.**

Lap-Shoulder Belt

Emergency Locking Retractor (ELR)

The seat belt has an emergency locking retractor (ELR), which is designed to lock the seat belt only during a sudden stop or impact. It also may lock if you pull the belt across your body very quickly. If this happens, let the belt go back to unlock it, then pull the belt across your body more slowly.

Automatic Locking Retractor (ALR)

The front passenger's seat belt and the rear seat belts have emergency locking retractors (ELRs) that can be temporarily converted to function as automatic locking retractors (ALRs). The ALR mode should be used if you need to secure a child restraint system in the seat. Refer to the "Child Restraint Systems" section for details.

Safety reminder

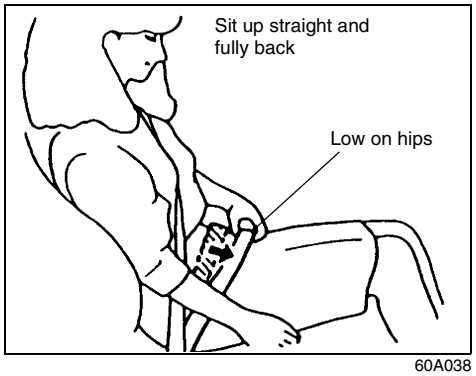

60A038

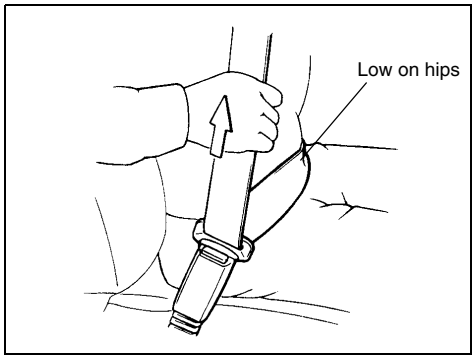

60A040

To reduce the risk of sliding under the belt during a collision, position the lap portion of the belt across your lap as low on your hips as possible and adjust it to a snug fit

Downloaded from www.Manualslib.com manuals search engine

BEFORE DRIVING

by pulling the shoulder portion of the belt upward through the latch plate. The length of the diagonal shoulder strap adjusts itself to allow freedom of movement.

All Seat Belts

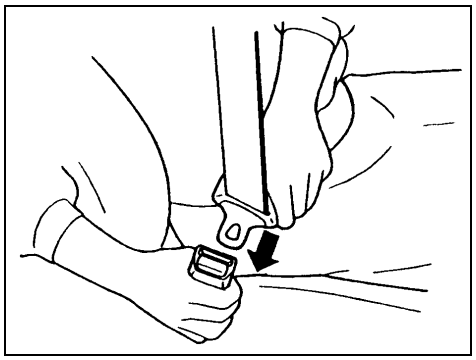

60A036

To fasten the seat belt, sit up straight and well back in the seat, pull the latch plate attached to the seat belt across your body and press it into the buckle until you hear a "click".

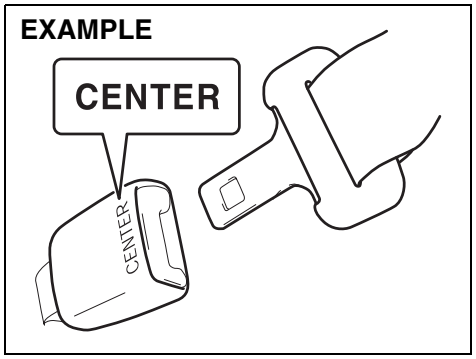

80J019

NOTE:
The word "CENTER" is molded into the buckle for the rear center belt. The buckles are designed so a latch plate can not be inserted into the wrong buckle.

Downloaded from www.Manualslib.com manuals search engine

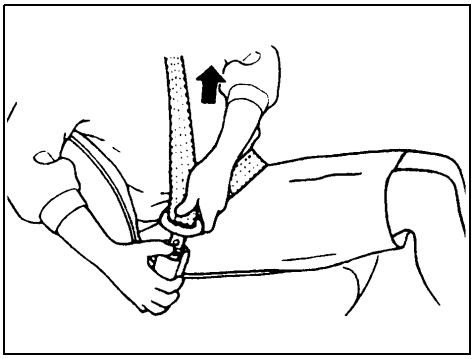

60A039

To unfasten the belt, push the red “PRESS” button on the buckle and allow the belt to retract.

Seat Belt Reminder

Driver’s seat belt reminder light

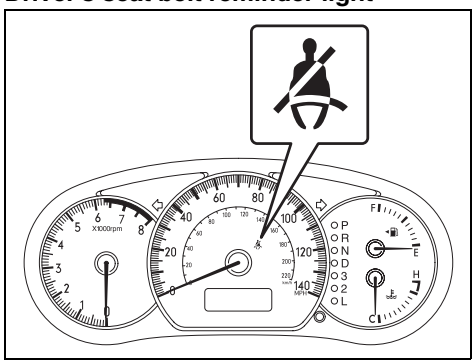

80J020

Front passenger’s seat belt reminder light

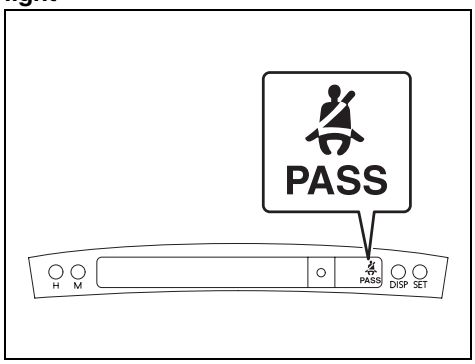

80J021

When the driver and front passenger don’t buckle their seat belts, the driver’s seat belt reminder light in the instrument cluster and the front passenger’s seat belt reminder light in the information display will come on and a buzzer will sound as a reminder to the driver and front passenger to buckle their seat belts.

⚠ WARNING

It is absolutely essential that the driver and passengers wear their seat belts at all times. Persons who are not wearing seat belts have a much greater risk of injury if an accident occurs. Make a regular habit of buckling your seat belt before putting the key in the ignition.

The seat belt reminder functions as shown in the figure below. There are some differences between the driver’s seat belt reminder and the front passenger’s seat belt reminder. For more details, refer to the explanation below.

Downloaded from www.Manualslib.com manuals search engine

BEFORE DRIVING

Flow chart

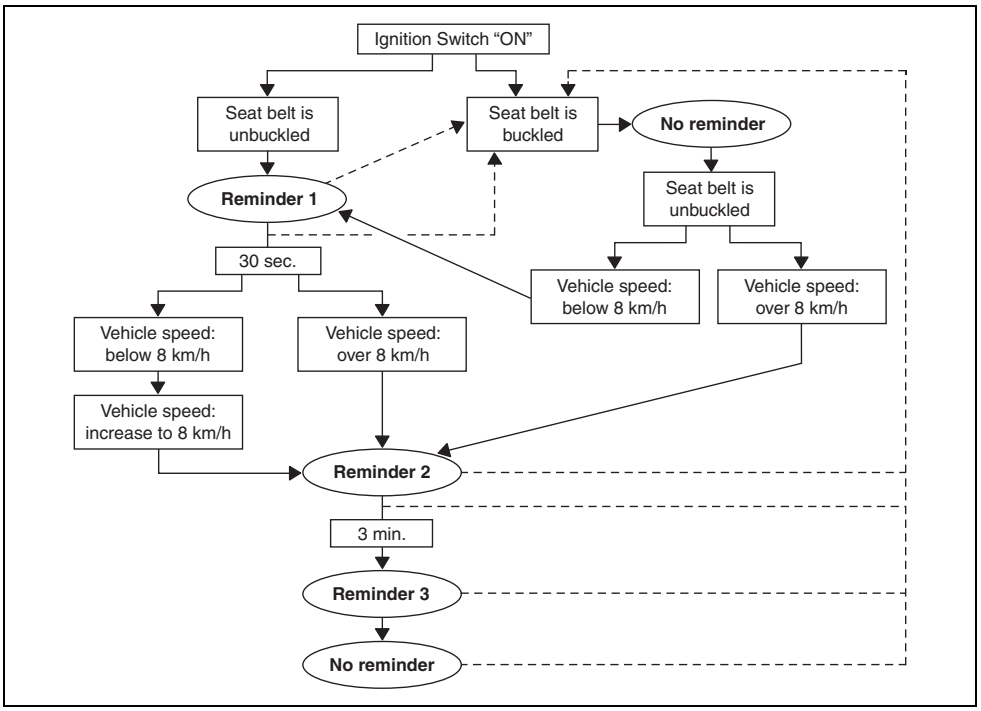

52D219

Reminder 1 – 3

For each reminder 1 – 3, the reminder light comes on for about 20 seconds, then blinks for about 55 seconds. When the reminder light first comes on, a buzzer sounds intermittently for about 6 seconds.

Driver's seat belt reminder

If the driver's seat belt remains unbuckled with the ignition key in the "ON" position, the driver's seat belt reminder works as follows:

1) The driver's seat belt reminder light will come on for about 20 seconds when the ignition key is turned to the "ON" position then will blink for about 55 seconds. When the light comes on, a buzzer will also sound intermittently for about 6 seconds (Reminder 1).
2) If the vehicle is driven (vehicle speed > 8 km/h), Reminder 2 will operate about 30 seconds after Reminder 1 has finished.
   If the vehicle is not driven (vehicle speed < 8 km/h), Reminder 2 will operate when driving starts (vehicle speed > 8 km/h).
3) Reminder 3 will operate about 3 minutes after Reminder 2 has finished.
4) Even if the driver's seat belt remains unbuckled after Reminder 3, there will be no further reminders.

If the driver has buckled his or her seat belt and later unbuckles the seat belt, the reminder system will be activated from Reminder 1 or Reminder 2 according to the vehicle speed. (Refer to the flow chart.)

The driver's seat belt reminder will be automatically canceled when the driver's seat belt is buckled or the ignition switch is turned off.

Downloaded from www.Manualslib.com manuals search engine

Front passenger's seat belt reminder
The front passenger's seat belt reminder will activate only when there is a passenger sitting in the front seat. In some situations, however, such as when you place heavy objects in the front seat, the seat belt reminder can be activated as if there were a passenger present. The front passenger's seat belt reminder works in the same manner as the driver's seat belt reminder, except that it is not activated until 10 seconds after the ignition switch is turned to the "ON" position.

Shoulder Anchor Height Adjuster

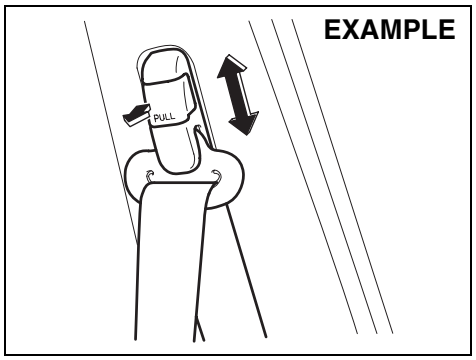

64J198

Adjust the shoulder anchor height so that the shoulder belt rides on the center of the outside shoulder. To adjust the shoulder anchor height, slide the anchor up or down while pulling the lock knob out. After adjustment, make sure that the anchor is securely locked.

⚠ WARNING

Be sure that the shoulder belt is positioned on the center of the outside shoulder. The belt should be away from your face and neck, but not falling off your shoulder. Misadjustment of the belt could reduce the effectiveness of the safety belt in a crash.

Seat Belt Hanger (if equipped)

SX4

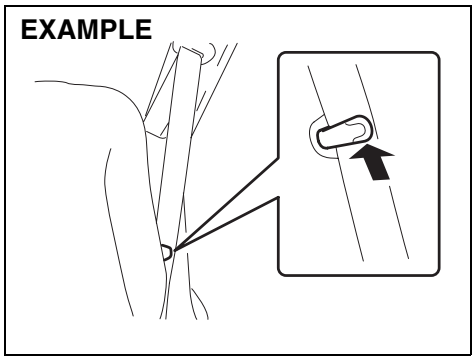

79J035

CAUTION

When you move a seatback, make sure the belt webbing is hooked in the seat belt hangers so the seat belts are not caught by the seatback, seat hinge, or seat latch. This helps prevent damage to the belt system.

Downloaded from www.Manualslib.com manuals search engine

BEFORE DRIVING

Seat Belt Inspection

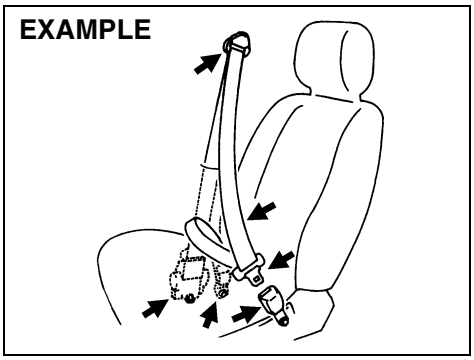

65D209S

Periodically inspect the seat belts to make sure they work properly and are not damaged. Check the webbing, buckles, latch plates, retractors, anchorages and guide loops. Replace any seat belts which do not work properly or are damaged.

⚠ WARNING

Be sure to inspect all seat belt assemblies after any collision. Any seat belt assembly which was in use during a collision (other than a very minor one) should be replaced, even if damage to the assembly is not obvious. Any seat belt assembly which was not in use during a collision should be replaced if it does not function properly, it is damaged in any way or the seat belt pretensioners were activated.

Child Restraint Systems

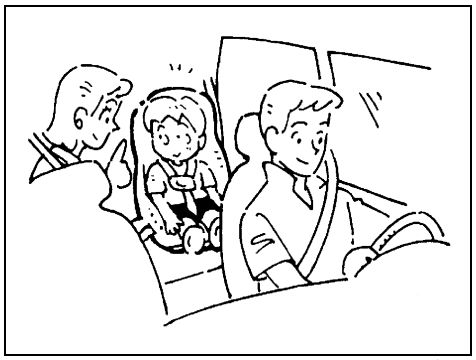

60G332

Infant restraint - rear seat only

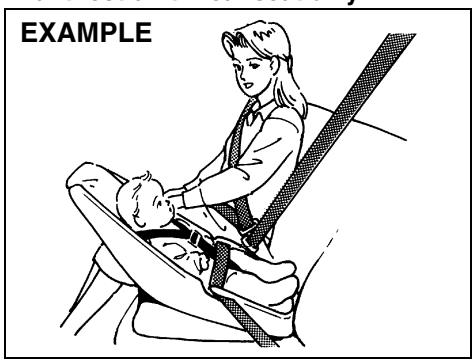

65D202

Downloaded from www.Manualslib.com manuals search engine

Infant restraint - rear seat only

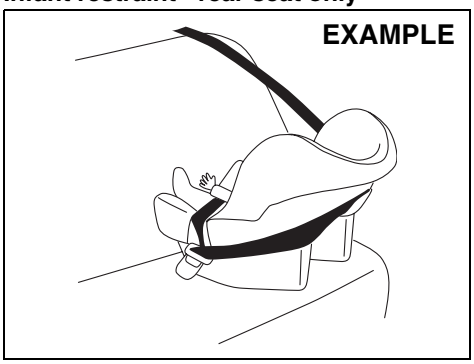

80JC007

Booster seat

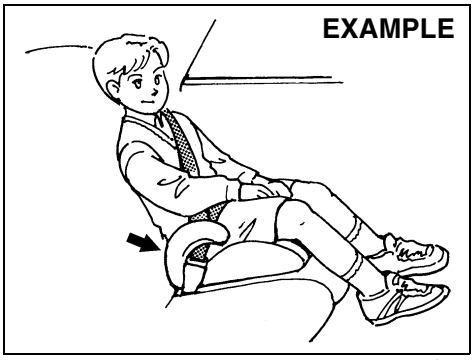

80JC008

SUZUKI highly recommends that you use a child restraint system to restrain infants and small children. Many different types of child restraint systems are available; make sure that the restraint system you select meets Federal Motor Vehicle Safety Standards.

All child restraint systems are designed to be secured in vehicle seats by either seat belts (lap belts or the lap portion of lap-shoulder belts) or by special rigid lower anchor bars built into the seats. Whenever possible, SUZUKI recommends that child restraint systems be installed on the rear seat. According to accident statistics, children are safer when properly restrained in rear seating positions than in front seating positions.

If you must use a front-facing child restraint in the front passenger's seat, be sure to move the front passenger's seat as far back as possible.

65D607

⚠ WARNING

Do not install a rear-facing child restraint in the front passenger's seat. If the passenger's air bag inflates, a child in a rear-facing child restraint could be killed or seriously injured. The back of a rear-facing child restraint would be too close to the inflating air bag.

Downloaded from www.Manualslib.com manuals search engine

BEFORE DRIVING

65D608

65D609

⚠ WARNING

Children could be endangered in a crash if their child restraints are not properly secured in the vehicle. When installing a child restraint system, be sure to follow the instructions below. Be sure to secure the child in the restraint system according to the manufacturer's instructions.

Installation with Lap-Shoulder Seat Belts (child restraint with no top strap)

EXAMPLE

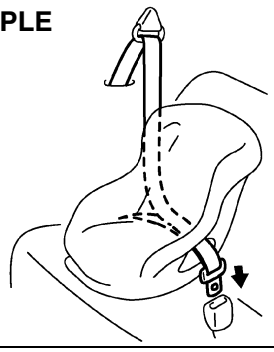

83E031

Install your child restraint system according to the instructions provided by the child restraint system manufacturer. If you install the child restraint system in the front seat, be sure to slide the seat to the rearmost position. After making sure that the seat belt is securely latched:

Downloaded from www.Manualslib.com manuals search engine

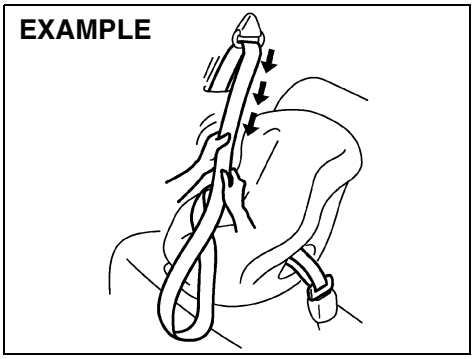

83E035

1) Pull all of the remaining webbing out of the retractor. You will hear a click, which means that the emergency locking retractor (ELR) has converted to function as an automatic locking retractor (ALR).

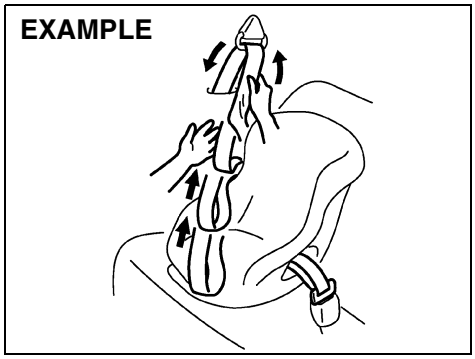

83E032

2) Allow the extra webbing to retract, and pull the webbing toward the retractor to take up any slack. Make sure that the lap portion of the belt is tight around the child restraint system and the shoulder portion of the belt is positioned so that it can not interfere with the child's head or neck.

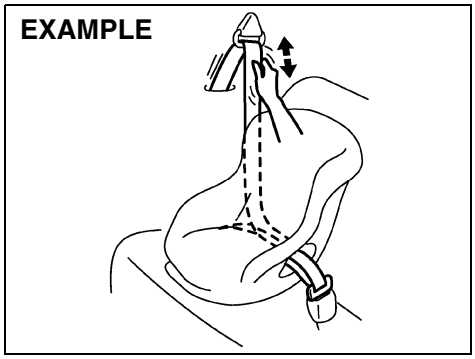

83E036

3) Make sure that the retractor has converted to the ALR mode by trying to pull webbing out of the retractor. If the retractor is in the ALR mode, the belt will be locked.

⚠ WARNING

If the retractor is not in the ALR mode, the child restraint system can move or tip over when your vehicle turns or stops abruptly.

Downloaded from www.Manualslib.com manuals search engine

BEFORE DRIVING

⚠ WARNING

Before installing a child restraint in the rear center seat, follow these steps for secure installation:
- **Make sure the detachable connector is securely latched and the webbing is not twisted.**
- **Make sure the seat belt is passed through the seat belt guide.**

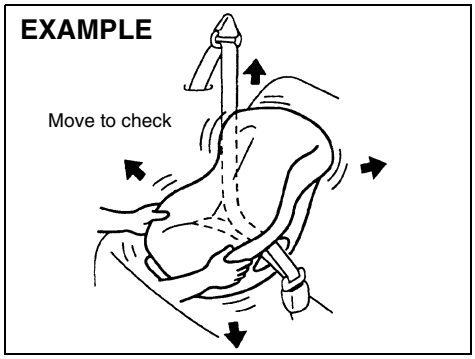

65D234

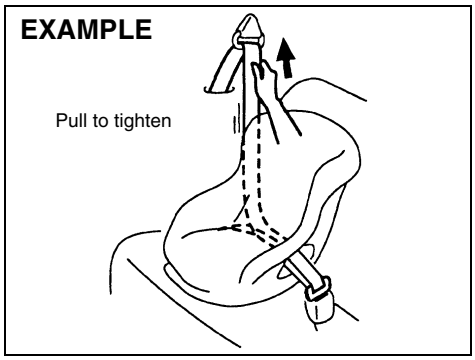

65D235

4) Try moving the child restraint system in all directions, to make sure it is securely installed. If you need to tighten the belt, pull more webbing toward the retractor.

To revert from ALR to ELR

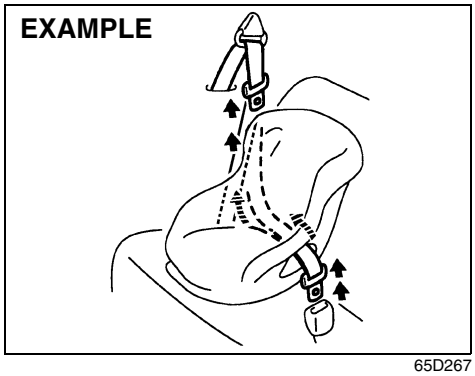

65D267

When you unbuckle the seat belt and allow it to retract to a certain length, the retractor will automatically revert back to the normal ELR mode.

Downloaded from www.Manualslib.com manuals search engine

Installation with the LATCH System

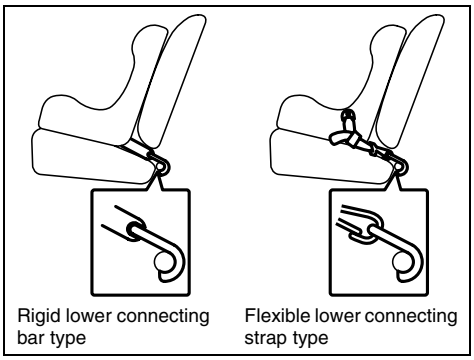

65D337

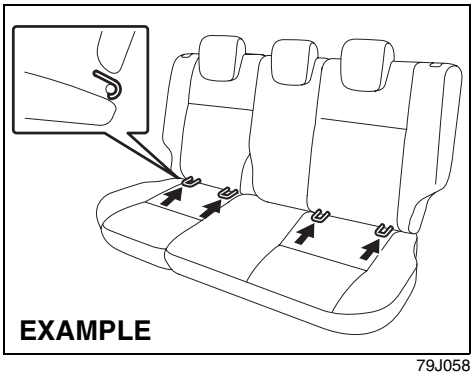

79J058

Your vehicle is equipped with lower anchors for securing up to one or two standard LATCH-type child restraint(s) in the second row seats. (LATCH stands for Lower Anchors and Tethers for Children.) The anchors are located where the rear of the seat cushion meets the bottom of the seatback.

SX4 SEDAN

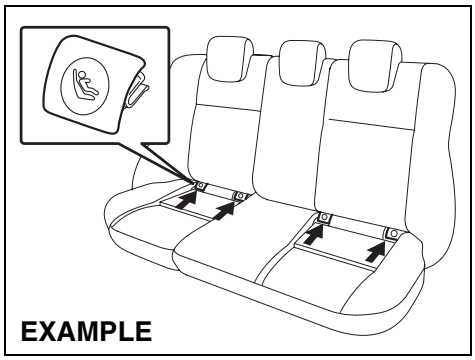

80JC028

For SX4 SEDAN, the covers marked with the child restraint symbol as shown in the illustration indicate the presence of lower anchors. Remove the covers before installing the child restraint system. Cover the lower anchors when not in use.

Install the LATCH-type child restraint system according to the instructions provided by the child restraint system manufacturer. After installing, try moving the child restraint system in all directions, especially forward, to make sure the flexible straps or rigid connecting bars are securely latched to the anchors.

NOTE:
Although there are three second row seating positions, you cannot install three LATCH type child restraints in the second row seats. You can install one or two LATCH restraint(s). Be sure to install the LATCH type child restraint(s) in the outboard seating positions.

If your LATCH restraint has flexible lower connecting straps, these general instructions apply:

1) If possible, fold the seatback rearward for easier installation.

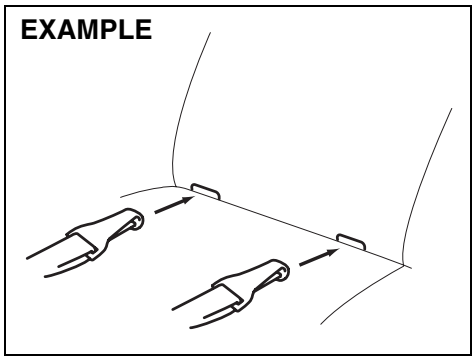

73K017

2) Place the child restraint in the second row seat, feeding the strap hooks through the slots in the seat cushion or the slots in the seatback bottom.

Downloaded from www.Manualslib.com manuals search engine

BEFORE DRIVING

EXAMPLE

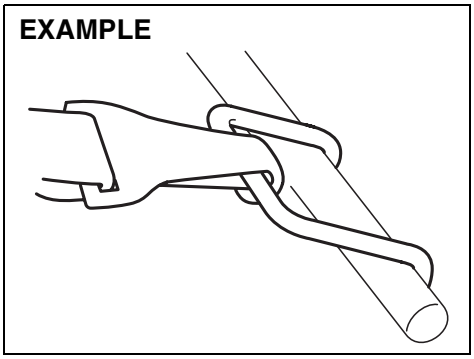

65D340

3) Snap the strap hooks to the anchors. Take care not to pinch your fingers.

EXAMPLE

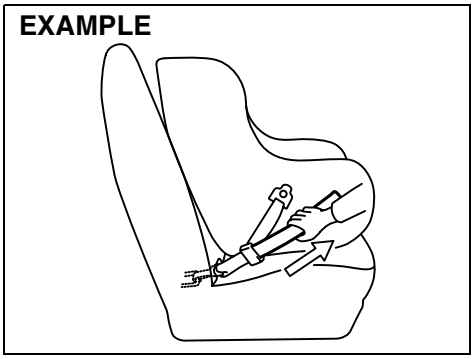

65D341

4) Return the seatback to the normal, upright position. Tighten the lower straps as described in the child restraint owner's manual. Attach the top tether strap, if applicable.

EXAMPLE

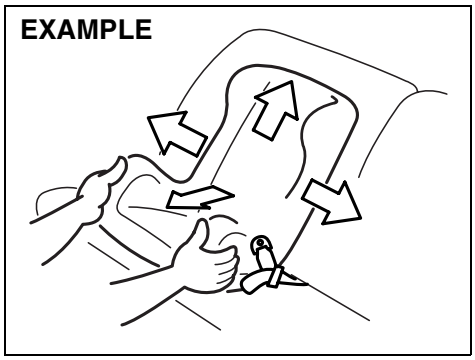

65D342

5) Make sure the child restraint is securely fastened by trying to move the child restraint system in all directions, especially forward.

⚠ WARNING

The seatback should always be securely latched in a fairly upright position when any type of child seat is installed. An unlatched or reclined seatback will reduce the intended effectiveness of the child restraint system.

If your LATCH restraint has rigid lower connecting bars, these general instructions apply:

1) If possible, fold the seatback rearward for easier installation.

EXAMPLE

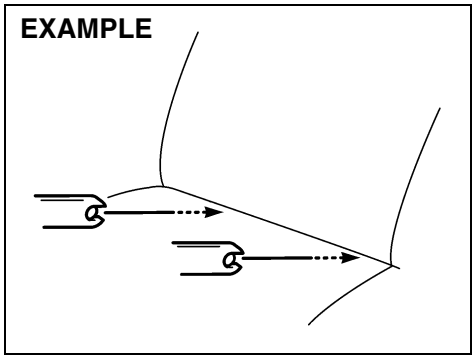

78F114

2) Place the child restraint in the second row seat, inserting the connecting bars through the slots in the seat cushion or the slots in the seatback bottom.

Downloaded from www.Manualslib.com manuals search engine

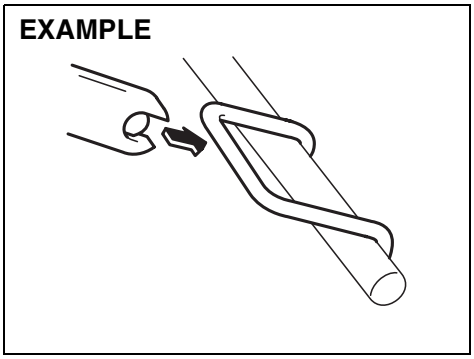

54G183

3) Use your hands to carefully align the connecting bar tips with the anchors. Take care not to pinch your fingers.

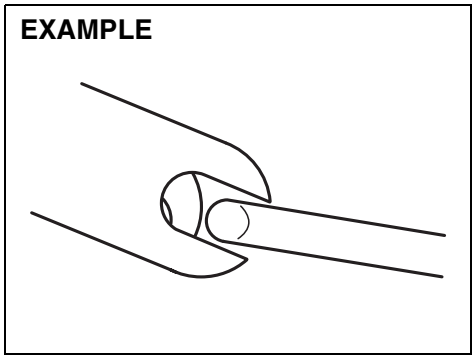

54G184

4) Push the child restraint toward the anchors so that the connecting bar tips are partially hooked to the anchors. Use your hands to confirm the position.

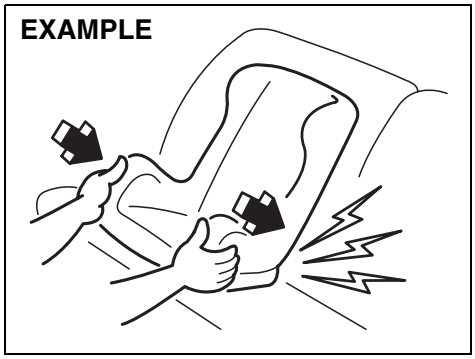

54G185

5) Grasp the front of the child restraint and push the child restraint forcefully to latch the connecting bars. Make sure they are securely latched by trying to move the child restraint system in all directions, especially forward.
6) Return the seatback if folded. Attach the top tether strap, if applicable.

⚠ WARNING

The seatback should always be securely latched in a fairly upright position when any type of child seat is installed. An unlatched or reclined seatback will reduce the intended effectiveness of the child restraint system.

Downloaded from www.Manualslib.com manuals search engine

BEFORE DRIVING

Installation of Child Restraint with Top Strap

SX4

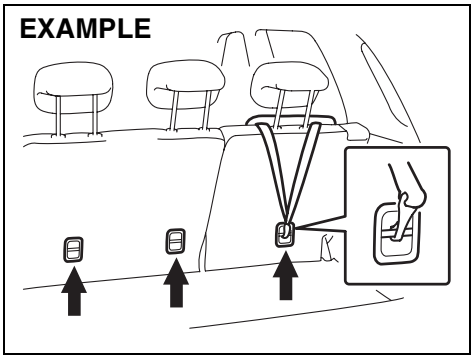

63J021

SX4 SEDAN

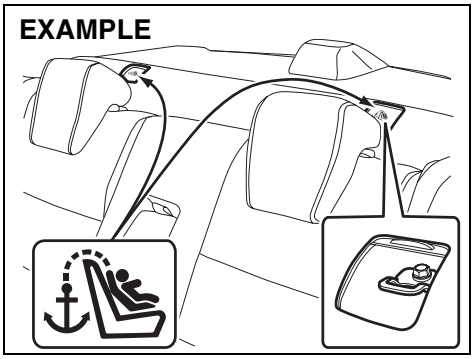

56KN015

Some child restraint systems require the use of a top strap. Top strap anchor brackets are provided in your vehicle at the locations shown in the illustrations. Install the child restraint system as follows:

1) For SX4, remove the luggage compartment cover.
2) Secure the child restraint on rear seat using the procedure described above for securing a restraint system that does not require a top strap.
3) For SX4 SEDAN, open the cover that is marked with the anchor bracket symbol to access the anchor bracket. Close the cover when not using the anchor bracket.
4) Hook the top strap to the anchor bracket and tighten the top strap according to the instructions provided by the child restraint system manufacturer. Be sure to attach the top strap to the corresponding anchor located directly behind the child restraint. Do not attach the top strap to the luggage restraint loops (if equipped).

⚠ WARNING

Do not attach the child restraint top strap to the luggage restraint loops (if equipped). Incorrectly attached top strap will reduce the intended effectiveness of the child restraint system.

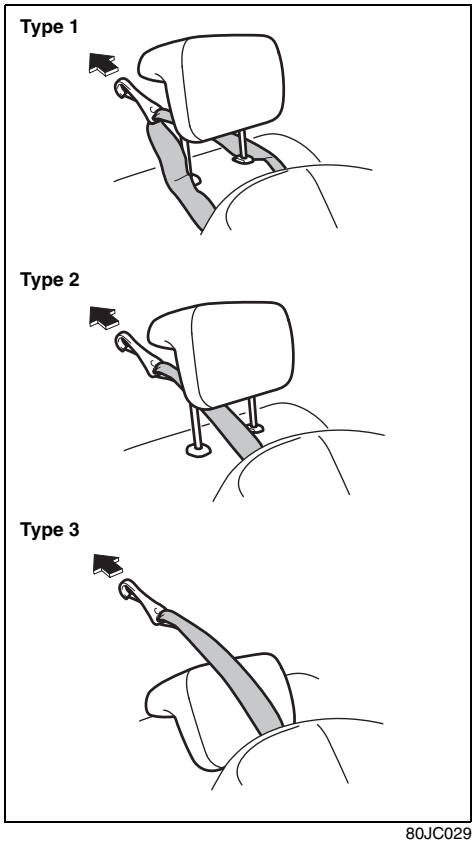

80JC029

Downloaded from www.Manualslib.com manuals search engine

Supplemental Restraint System (advanced air bags): 3, 9, 12

5) When routing the top strap, be sure to pass the top strap as shown in the illustration. For SX4 SEDAN, if the top strap can not be properly tightened when passed under the head restraint as shown in the Type 1 and Type 2 illustrations, pass the top strap over the top of the head restraint as shown in the Type 3 illustration. (Refer to "Head Restraints" section for details on how to raise or lower the head restraint.)
6) Make sure that cargo does not interfere with routing of the top strap.

Seat Belt Extender

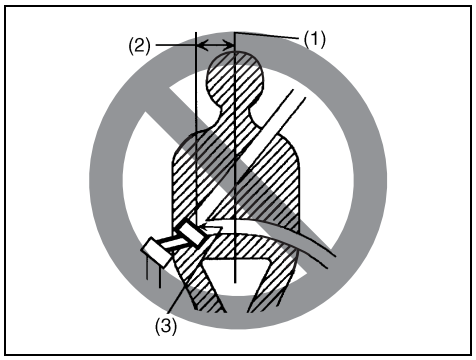

65D613

(1) Center of body
(2) Less than 152 mm (6 inches)
(3) Open end of extender buckle

If a seat belt cannot be fastened securely because it is not long enough, see your authorized SUZUKI dealer for a seat belt extender. Seat belt extenders are available for each seating position except for the rear center position. After inspecting the relationship between the seat belt length, the occupant's body size, and the seat adjustment (the driver's seat should always be adjusted as far back as possible while still maintaining control of the vehicle, and other adjustable seats should be adjusted as far back as possible), your dealer can select the appropriate seat belt extender.

- A seat belt extender should only be used for the person, vehicle and seating location it was provided for.
- When using the extender, ensure that both ends are latched securely. Do not use the extender if the open end of the extender's buckle is within 152 mm (6 inches) of the center of the occupant's body (See diagram). Use of the extender when the buckle is too close to the center of the body could increase the risk of abdominal injury in the event of an accident, and could cause the shoulder belt to be positioned incorrectly.
- Make sure to use the correct buckle corresponding to your seating position.
- Seat belt extenders are not intended for use by pregnant women, and should only be used upon approval by their medical advisors.
- Remove and stow the extender when it is not being used.

Downloaded from www.Manualslib.com manuals search engine

Supplemental Restraint System (advanced air bags): 3, 9, 12

⚠ WARNING

Failure to follow these instructions may increase the risk of injury in a crash.

- **Only use an extender for the person, vehicle and seating position it was provided for.**
- **Do not use if open end of extender's buckle is within 152 mm (6 inches) of center of occupant's body (See diagram).**
- **Remove and stow the extender when it is not being used.**

Seat Belt Pretensioner System (for front seat belt only)

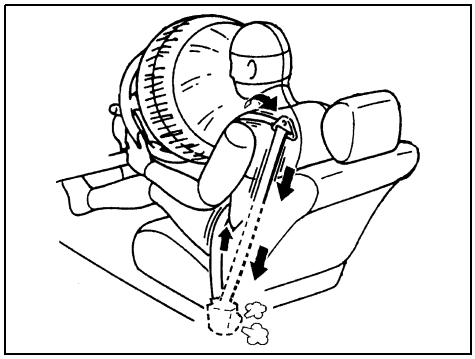

52D011

⚠ WARNING

This section of the owner's manual describes your SUZUKI's SEAT BELT PRETENSIONER SYSTEM. Please read and follow ALL these instructions carefully to minimize your risk of severe injury or death.

Your vehicle is equipped with a seat belt pretensioner system at the front seating positions. You can use the pretensioner seat belts in the same manner as ordinary seat belts.

The seat belt pretensioner system works with the SUPPLEMENTAL RESTRAINT SYSTEM (advanced air bags). The crash sensors and the electronic controller of the air bag system also control the seat belt pretensioners. The pretensioners are triggered only when there is a frontal crash severe enough to trigger the front air bags and the seat belts are fastened. If the seat belts are not fastened, the respective pretensioner system will not be activated. For precautions and general information including servicing the pretensioner system, refer to the "Supplemental Restraint System (air bags)" section in addition to this "Seat Belt Pretensioner System" section, and follow all those precautions.

The pretensioner is located in each front seat belt retractor. The pretensioner tightens the seat belt so the belt fits the occupant's body more snugly in the event of a frontal crash. The retractors will remain locked after the pretensioners are activated. Upon activation, some noise will occur and some smoke may be released. These conditions are not harmful and do not indicate a fire in the vehicle.

Downloaded from www.Manualslib.com manuals search engine

Supplemental Restraint System (advanced air bags): 3, 9, 12

The driver and all passengers must be properly restrained by wearing seat belts at all times, whether or not a pretensioner is equipped at their seating position, to minimize the risk of severe injury or death in the event of a crash. Sit fully back in the seat; sit up straight; do not lean forward or sideways. Adjust the belt so the lap portion of the belt is worn low across the pelvis, not across the waist. Please refer to the "Seat Adjustment" section and the instructions and precautions about the seat belts in this "Seat Belts and Child Restraint Systems" section for details on proper seat and seat belt adjustments.
Please note that the pretensioners along with the front air bags will activate only in severe frontal collisions. They are not designed to activate in rear impacts, side impacts, rollovers or minor frontal collisions. The pretensioners can be activated only once. If the pretensioners are activated (that is, if the front air bags are activated), have the pretensioner system serviced by an authorized SUZUKI dealer as soon as possible.

If the AIR BAG light on the instrument cluster does not blink or come on briefly when the ignition switch is turned to the "ON" position, stays on for more than 10 seconds, or comes on while driving, the pretensioner system or the air bag system may not work properly. Have both systems inspected by an authorized SUZUKI dealer as soon as possible.

Service on or around the pretensioner system components or wiring must be performed only by an authorized SUZUKI dealer who is specially trained. Improper service could result in unintended activation of pretensioners or could render the pretensioner inoperative. Either of these two conditions may result in personal injury.

To prevent damage or unintended activation of the pretensioners, be sure the battery is disconnected and the ignition switch has been in the "LOCK" position for at least 90 seconds before performing any electrical service work on your SUZUKI. Do not touch pretensioner system components or wiring. The wires are wrapped with yellow tape or yellow tubing, and the couplers are yellow. When scrapping your SUZUKI, ask your SUZUKI dealer, body repair shop or scrap yard for assistance.

Supplemental Restraint System (air bags)

EXAMPLE

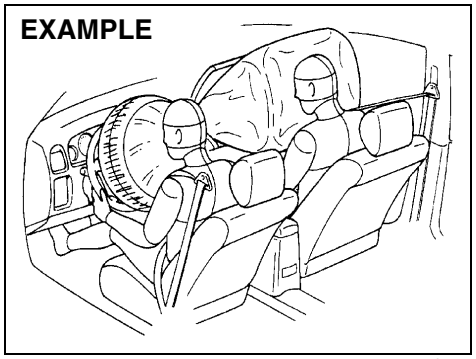

54G022

⚠ WARNING

This section of the owner's manual describes the protection provided by your SUZUKI's SUPPLEMENTAL RESTRAINT SYSTEM (air bags). Please read and follow ALL these instructions carefully to minimize your risk of severe injury or death in the event of a collision.

Your vehicle has advanced front air bags and side air bags for the driver and right front passenger. Your vehicle also has side curtain air bags.

Downloaded from www.Manualslib.com manuals search engine

Supplemental Restraint System (advanced air bags): 3, 9, 12

BEFORE DRIVING

EXAMPLE

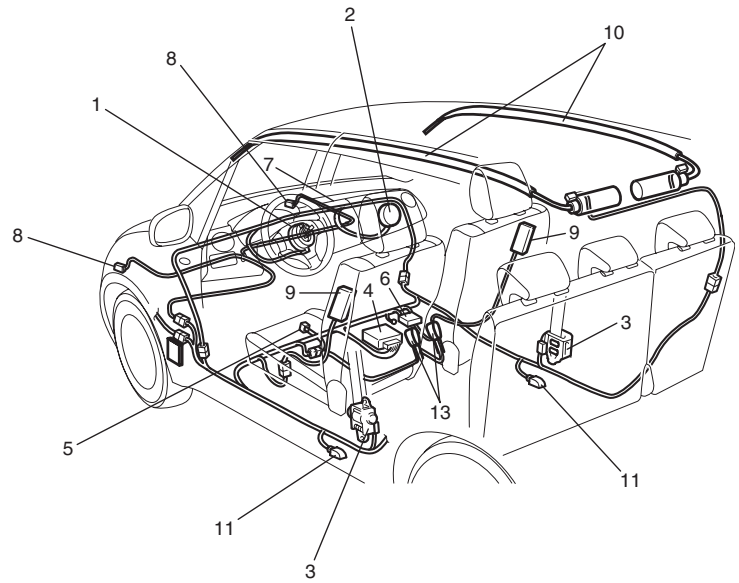

80JC030

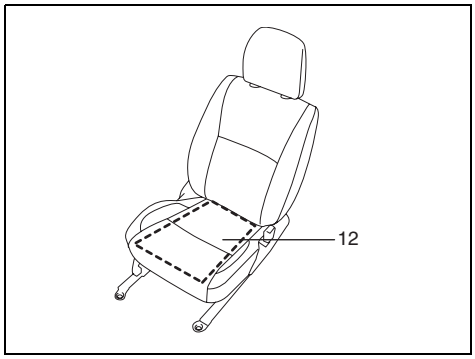

80JC009

Your vehicle is equipped with a Supplemental Restraint System consisting of the following components in addition to a lap-shoulder belt at each front seating position.

1. Driver's front air bag
2. Front passenger's front air bag
3. Seat belt pretensioners
4. Air bag controller
5. Driver's seat position sensors
6. Occupant classification module
7. "PASS AIR BAG OFF" indicator
8. Forward crash sensors
9. Side air bags
10. Side curtain air bags
11. Side crash sensors
12. Front passenger's sensor mat
13. Seat belt buckle sensors

Downloaded from www.Manualslib.com manuals search engine

Supplemental Restraint System (advanced air bags): 3, 9, 12

63J030

If the AIR BAG light on the instrument cluster does not blink when the ignition switch is first turned to the “ON” position, or the AIR BAG light stays on, or comes on while driving, the air bag system (or the seat belt pretensioner system) may not work properly. Have the air bag system inspected by an authorized SUZUKI dealer as soon as possible.

Front Air Bags

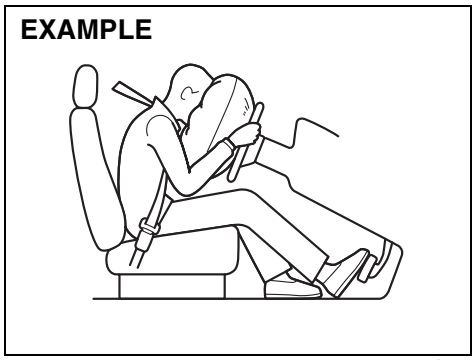

80JS026

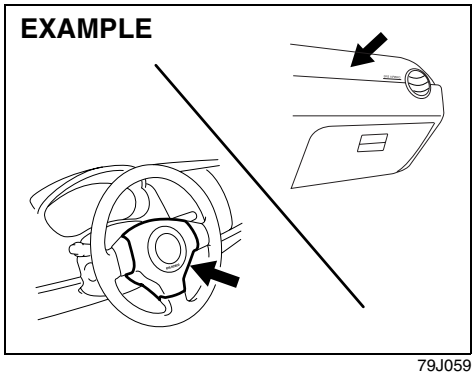

79J059

The driver’s front air bag is located behind the center pad of the steering wheel. The words “SRS AIRBAG” are molded into the air bag cover to identify the location of the air bag. The front passenger’s front air bag is located behind the passenger’s side of the dashboard. The words “SRS AIRBAG” are molded into the air bag cover to identify the location of the air bag.

Frontal collision range

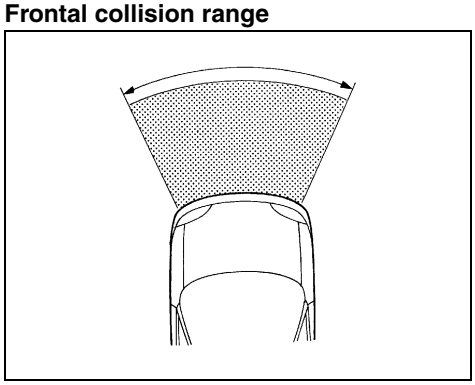

60G032

Front air bags are designed to inflate only in severe frontal collisions.

Downloaded from www.Manualslib.com manuals search engine

BEFORE DRIVING

Front air bags will not inflate

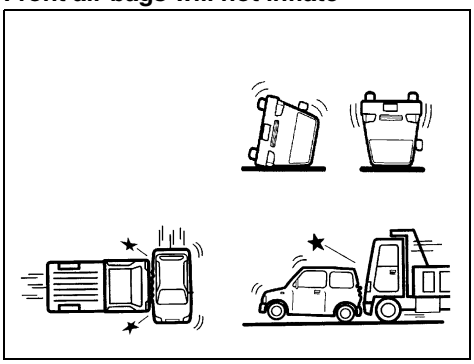

65D236

Front air bags will probably not inflate

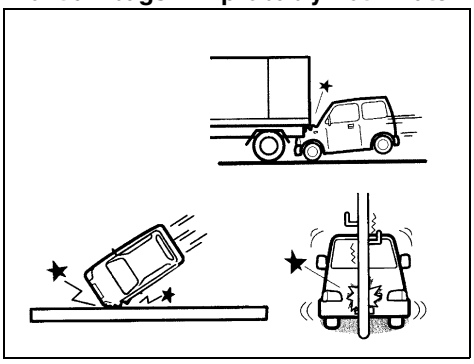

65D237

They are not designed to inflate in rear impacts, side impacts, rollovers or minor frontal collisions, since they would offer no protection in those types of accidents. Remember, since air bags deploy only one time during an accident, seat belts are needed to restrain occupants from further movements during the accident.

Therefore, an air bag is NOT a substitute for seat belts. To maximize your protection, ALWAYS WEAR YOUR SEAT BELTS. Be aware that no system can prevent all possible injuries that may occur in an accident.

⚠ WARNING

An air bag supplements, or adds to, the crash protection offered by seat belts. The driver and all passengers must be properly restrained by wearing seat belts at all times, whether or not air bags are mounted at their seating position, to minimize the risk of severe injury or death in the event of a crash.

Your vehicle has “dual stage” front air bags, which adjust the air bag inflation force according to crash severity, driver’s seat fore/aft position and whether or not the front passenger’s seat belt is fastened. Also, your vehicle has a front passenger sensing system, which turns off the front passenger’s front air bag and seat belt pretensioner under certain conditions.

Side Air Bags and Side Curtain Air Bags

EXAMPLE

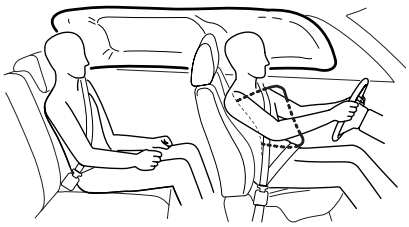

62J114

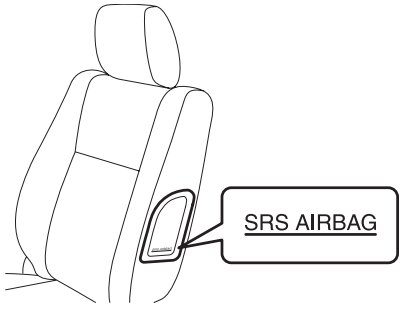

77J052

Downloaded from www.Manualslib.com manuals search engine

Side air bags are located in the part of the front seatbacks closest to the doors. The words “SRS AIRBAG” are molded into the side air bag cover to identify the location of the side air bags.

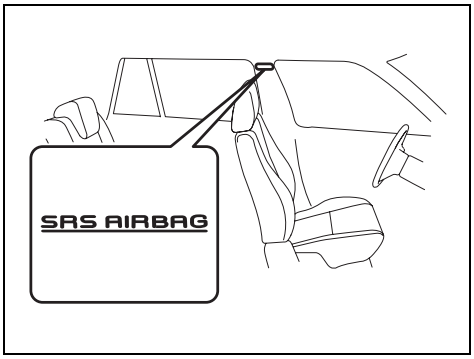

64J034

Side curtain air bags are located in the roof lining. The words “SRS AIRBAG” are molded into the pillar to identify the location of the side curtain air bags.

Side collision range

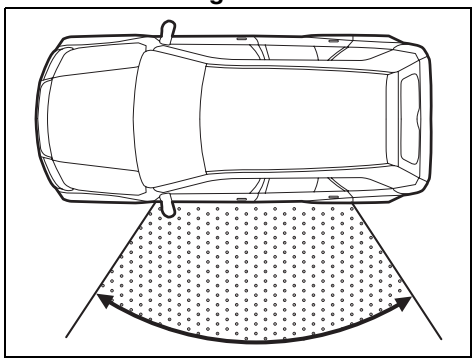

64J036

Side air bags and side curtain air bags will not inflate

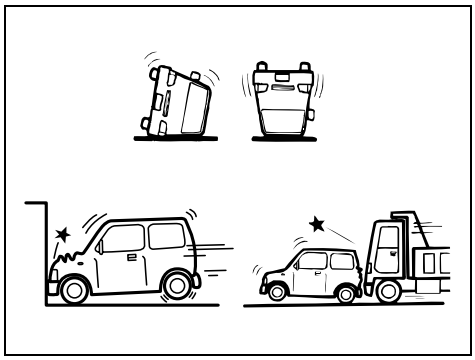

54G027

Side air bags and side curtain air bags will probably not inflate

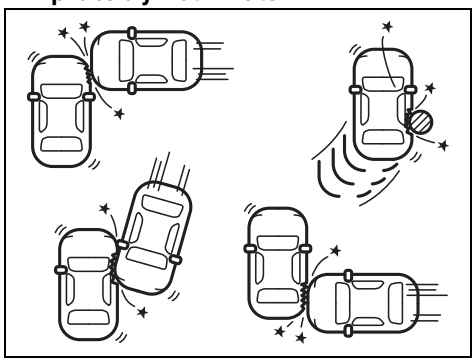

54G028

Side air bags and side curtain air bags are designed to inflate only in severe side impact collisions. They are not designed to inflate in frontal or rear collisions, rollovers or minor side collisions, since they would offer no protection in those types of accidents. Only the side air bag and side curtain air bag on the side of the vehicle that is struck will inflate. Remember, since an air bag deploys only one time during an accident, seat belts are needed to restrain occupants from further movements during the accident.

Therefore, an air bag is NOT a substitute for seat belts. To maximize your protection, ALWAYS WEAR YOUR SEAT BELTS. Be aware that no system can prevent all possible injuries that may occur in an accident.

Downloaded from www.Manualslib.com manuals search engine

⚠ WARNING

An air bag supplements, or adds to, the crash protection offered by seat belts. The driver and all passengers must be properly restrained by wearing seat belts at all times, whether or not air bags are mounted at their seating position, to minimize the risk of severe injury or death in the event of a crash.

⚠ WARNING

If the AIR BAG light in the instrument cluster ever comes on and stays on, it means that something may be wrong with the air bag system. If this ever happens, have the vehicle serviced immediately, because the air bags may not offer the protection for which they were designed.

Driver's Seat Position Sensor

The driver's seat is equipped with a seat position sensor to monitor the driver seat fore/aft position. The seat position sensor provides information which is used to judge if the driver's front air bag should deploy at reduced power or at full power.

CAUTION

Do not put any cargo or metal objects under the seat. The seat position sensor may not work properly or may be damaged if it is covered with something.

When the seat position sensor has a problem, the AIR BAG light on the instrument cluster will turn on. If this happens, deployment of the driver's front air bag will not include consideration of seat fore/aft position. Have the air bag system inspected by an authorized SUZUKI dealer as soon as possible.

Front Passenger's Seat Belt Buckle Sensor

The front passenger's seat belt buckle is equipped with a sensor to monitor whether or not the front passenger's seat belt is fastened. The front passenger's seat belt buckle sensor provides information which is used to judge if the front passenger's air bag should deploy at reduced power or at full power.

⚠ WARNING

When the buckle sensor has a problem, the AIR BAG light on the instrument cluster will turn on. If this happens, deployment of the front passenger's air bag will not include consideration of whether the front passenger's seat belt is fastened or not. Have the air bag system inspected by an authorized SUZUKI dealer as soon as possible.

Downloaded from www.Manualslib.com manuals search engine

Front Passenger Sensing System

The front passenger sensing system will turn off the front passenger's front air bag and seat belt pretensioner under certain conditions. This system works using a sensor mat that is part of the front passenger's seat. The front passenger sensing system is designed to detect whether an occupant is present in the seat and, if an occupant is present, to determine whether the front passenger's front air bag and seat belt pretensioner should be enabled or disabled (turned off).

NOTE:
The front passenger's side air bag and the side curtain air bag are not controlled by the front passenger sensing system.

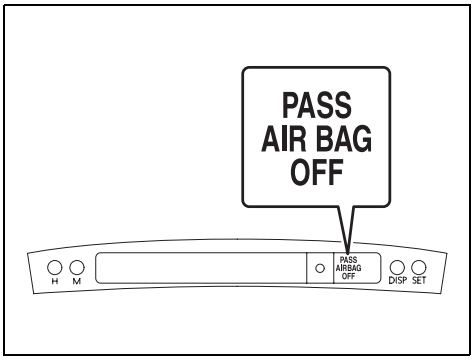

80J024

When the ignition switch is turned to the "ON" position, the "PASS AIR BAG OFF" indicator comes on for several seconds to let you know the system is working. When the front passenger sensing system has turned off the front passenger's front air bag including the seat belt pretensioner, the "PASS AIR BAG OFF" indicator will come on and stay on to remind you that the front passenger's front air bag is off.

The front passenger sensing system uses front seat pressure measurements and pressure locations to determine whether to activate or deactivate the front passenger's front air bag. The front passenger sensing system may or may not turn off the front air bag, depending on the front passenger's seating posture and body build. The air bag should be turned off in the following situations:

- There is no occupant in the front passenger seat.
- The occupant of the front passenger seat lifts his or her weight off of the seat for a period of time.
- The occupant of the front passenger seat is an infant or small child in a child restraint system or a small child in a booster seat.
- A smaller person, such as a child who has outgrown child restraints or a very small adolescent is seated in the front passenger seat.

NOTE:
If the front passenger seat is unoccupied, the "PASS AIR BAG OFF" indicator will not come on but the front passenger's front air bag will not deploy and the seat belt pretensioner will not operate.

If you have secured a child in the front passenger seat in a forward-facing child restraint system or booster seat and the "PASS AIR BAG OFF" indicator light is not on, turn the vehicle off, remove the child restraint or booster seat from the vehicle and reinstall it following the child restraint or booster seat manufacturer's directions. Also refer to "Seat Belts and Child Restraint Systems" in this section. If, after reinstalling the child restraint and restarting the vehicle, the "PASS AIR BAG OFF" indicator is still not lit, check to make sure that the vehicle's seatback is not pressing the child restraint into the seat cushion. If this happens, slightly recline the vehicle's seatback and adjust the seat cushion if possible. Also make sure the child restraint is not trapped under the vehicle head restraint. If this happens, adjust the head restraint. If the "PASS AIR BAG OFF" indicator is still not on, secure the child in the child restraint or booster seat in a rear seat position in the vehicle and check with your dealer.

Downloaded from www.Manualslib.com manuals search engine

65D607

⚠ WARNING

Do not install a rear-facing child restraint in the front passenger's seat. If the passenger's front air bag inflates, a child in a rear-facing child restraint could be seriously injured. The back of a rear-facing child restraint would be too close to the inflating air bag.

According to accident statistics, children are safer when properly restrained in rear seating positions than in front seating positions. Whenever possible, SUZUKI recommends you install child restraints in the rear seat.

The front passenger sensing system is designed to enable the front passenger's front air bag when the system senses a properly-seated adult in the front passenger's seat. When the passenger sensing system has allowed the air bag to be enabled, the "PASS AIR BAG OFF" indicator will remain off to remind you that the air bag is active.

If a person of adult size is sitting in the front passenger's seat and the "PASS AIR BAG OFF" indicator comes on, it could be because that person isn't sitting properly in the seat. If this happens, unfasten the seat belts, sit upright in the center of the seat with the seatback nearly vertical and your legs outstretched, and refasten the seat belt.

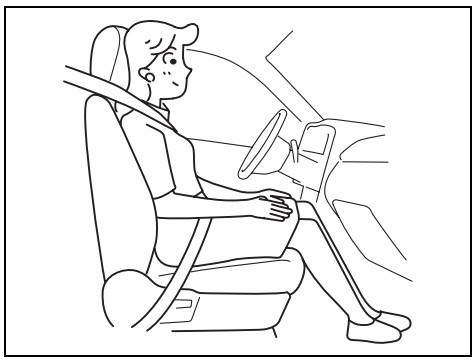

52D258

When seated as shown in the above illustration, the front passenger sensing system senses a properly-seated occupant and enables the air bag.

When using a seat belt extender, follow the instructions in the "Seat Belt Extender" section.

⚠ WARNING

Do not place any heavy objects on the front passenger's seat. The pressure sensors in the sensor mat could be damaged and the front passenger sensing system may not work properly.

⚠ WARNING

The front passenger sensing system may not work properly in the following situations:

- **The occupant is sitting near the dashboard or is not sitting in the proper position.**
- **Objects placed under the seat are pushing up on the seat cushion.**

⚠ WARNING

If the "PASS AIR BAG OFF" indicator on the instrument panel turns on even though there is no occupant or an adult occupant in the front passenger's seat, it means that something may be wrong with the passenger sensing system. Have the system inspected by an authorized SUZUKI dealer as soon as possible.

Downloaded from www.Manualslib.com manuals search engine

⚠ WARNING

- **Do not spill any liquids on the seat. Liquids can damage the sensors under the front seat.**
- **Have the driver's seat position sensor and the front passenger's sensor mat inspected by your dealer after a collision.**
- **Do not replace the front seats. If you replace them, the air bags and front passenger sensing system may not work properly.**
- **Do not use a seat cover. If you use a seat cover, the front passenger sensing system may not work properly.**

How the System Works

In a frontal collision, the crash sensors will detect rapid deceleration and send a signal to the controller. If the controller judges that the deceleration represents a severe frontal crash, the controller will trigger the inflators. The controller also judges:

- Whether the front air bags should deploy at reduced power or at full power according to crash severity.
- Whether the air bags should deploy at reduced power or at full power according to crash severity, driver's seat fore/aft position and whether or not the front passenger's seat belt is fastened.
- Whether the front passenger's front air bag should deploy or not based on classification of the occupant of the front passenger's seat.

Since your vehicle is equipped with side air bags, and side curtain air bags, crash sensors will detect a side collision, and if the controller judges that the side collision is severe enough, it will trigger the side air bag and side curtain air bag inflators.

The inflators inflate the appropriate air bags with nitrogen or argon gas. The inflated air bags provide a cushion for your head (front air bags and side curtain air bags only) and upper body. The air bag inflates and deflates so quickly that you may not even realize that it has activated. The air bag will neither hinder your view nor make it harder to exit the vehicle.

Air bags must inflate quickly and forcefully in order to reduce the chance of serious or fatal injuries. However, an unavoidable consequence of the quick inflation is that the air bag may irritate bare skin, such as the facial area against a front air bag. Also, upon inflation, a loud noise will occur and some powder and smoke will be released. These conditions are not harmful and do not indicate a fire in the car. Be aware, however, that some air bag components may be hot for a while after inflation.

A seat belt helps keep you in the proper position for maximum protection when an air bag inflates. Adjust your seat as far back as possible while still maintaining control of the vehicle. Sit fully back in your seat; sit up straight; do not lean over the steering wheel or dashboard. Front occupants should not lean on or sleep against the door. Please refer to the "Seat Adjustment" section and the "Seat Belts and Child Restraint Systems" section in the "BEFORE DRIVING" section for details on proper seat and seat belt adjustments.

Downloaded from www.Manualslib.com manuals search engine

65D610

54G582

⚠ WARNING

- **The driver should not lean over the steering wheel. The front passenger should not rest his or her body against the dashboard, or otherwise get too close to the dashboard. For vehicles with side air bags and side curtain air bags, occupants should not lean on or sleep against the door. In these situations, the out-of-position occupant would be too close to an inflating air bag, and may suffer severe injury.**
- **Do not attach any objects to, or place any objects over, the steering wheel or dashboard. Do not place any objects between the air bag and the driver or front passenger. These objects may interfere with air bag operation or may be propelled by the air bag in the event of a crash. Either of these conditions may cause severe injury.**
- **For vehicles with side air bags, do not place seat covers on the front seats, because seat covers could restrict the air bag's inflation. Also, do not place any cup holders or other objects on the door, as these objects could be propelled by the air bag in the event of a crash. Either of these conditions may cause severe injury.**

Note that even though your vehicle may be moderately damaged in a collision, the collision may not have been severe enough to trigger the front, side, or side curtain air bags to inflate. If your car sustains ANY front-end or side damage, have the air bag system inspected by an authorized SUZUKI dealer to ensure it is in proper working order.

Your vehicle is equipped with a diagnostic module which records information about the air bag system if the air bags deploy in a crash. The module records information about overall system status, which sensors activated the deployment, and whether the front seat belts were in use.

Servicing the Air Bag System

If the air bags inflate, have the air bags and related components replaced by an authorized SUZUKI dealer as soon as possible.

If your vehicle ever gets in deep water and the driver's floor is submerged, the air bag controller could be damaged. If this happens, have the air bag system inspected by the SUZUKI dealer as soon as possible.

Special procedures are required for servicing or replacing an air bag. For that reason, only an authorized SUZUKI dealer should be allowed to service or replace your air bags. Please remind anyone who services your SUZUKI that it has air bags.

Downloaded from www.Manualslib.com manuals search engine

Service on or around air bag components or wiring must be performed only by an authorized SUZUKI dealer. Improper service could result in unintended air bag deployment or could render the air bags inoperative. Either of these two conditions may result in severe injury.

To prevent damage or unintended inflation of the air bag system, be sure the battery is disconnected and the ignition switch has been in the “LOCK” position for at least 90 seconds before performing any electrical service work on your SUZUKI. Do not touch air bag system components or wires. The wires are wrapped with yellow tape or yellow tubing, and the couplers are yellow for easy identification.

Scrapping a car that has an undeployed air bag can be hazardous. Ask your dealer, body repair shop or scrap yard for help with disposal.

If it is necessary to modify the advanced front air bag system to accommodate a person with disabilities, owners in the continental United States can call American Suzuki toll-free at 1-800-934-0934, or write to:

American Suzuki Motor Corporation
Automotive Customer Relations
3251 East Imperial Highway
Brea, CA 92821-6795

If you purchased your SUZUKI in Canada please contact the Suzuki Canada Customer Relations Department by telephone at 1-905-889-2677 extension 2254 or in writing at:

Suzuki Canada Inc.
Customer Relations
100 East Beaver Creek Road
Richmond Hill, On
L4B 1J6

Downloaded from www.Manualslib.com manuals search engine

MEMO

Downloaded from www.Manualslib.com manuals search engine

STEERING COLUMN CONTROLS

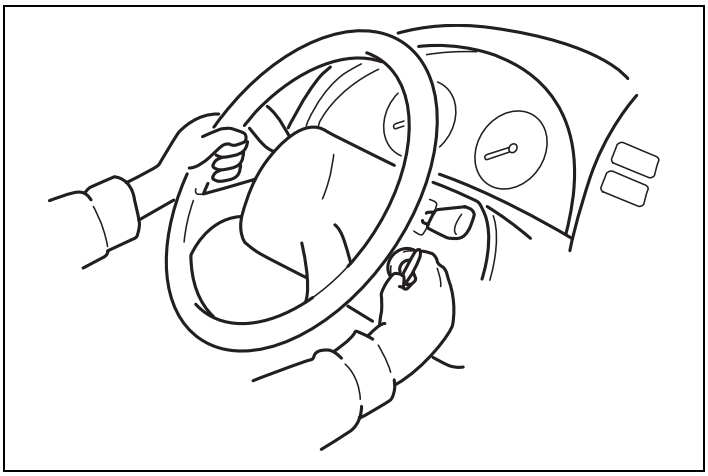

60G405

Ignition Switch 3-1
Lighting/Turn Signal Control Lever 3-5
Windshield Wiper and Washer Lever 3-6
Rear Window Wiper/Washer Switch (if equipped) 3-8
Tilt Steering Lock Lever (if equipped) 3-8
Cruise Control (if equipped) 3-9
Remote Audio Controls (if equipped) 3-11
Horn 3-11

Downloaded from www.Manualslib.com manuals search engine

STEERING COLUMN CONTROLS

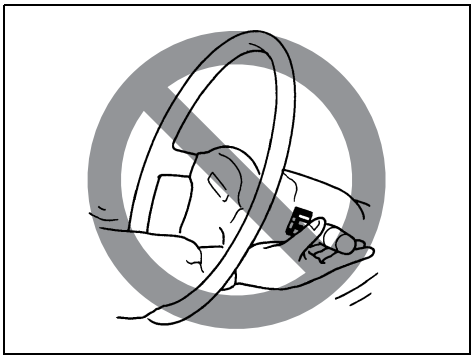

65D611

⚠ WARNING

To avoid possible injury, do not operate controls by reaching through the steering wheel.

Ignition Switch

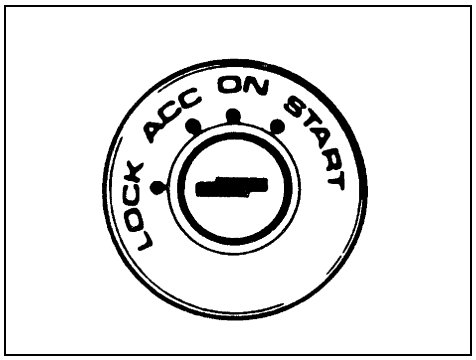

60B041

The ignition switch has the following four positions:

LOCK
This is the normal parking position. It is the only position in which the key can be removed.

Manual transaxle

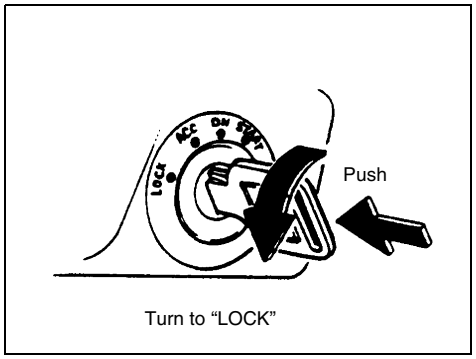

60A055

- **Manual transaxle vehicles**
  You must push in the key to turn it to the “LOCK” position. It locks the ignition, and prevents normal use of the steering wheel after the key is removed.

- **Automatic transaxle vehicles**
  The gearshift lever must be in the “P” (Park) position to turn the key to the “LOCK” position. It locks the ignition and prevents normal use of the steering wheel and gearshift lever.

Downloaded from www.Manualslib.com manuals search engine

Ignition Switch: 8

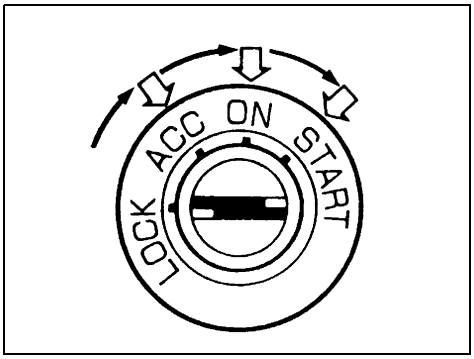

60A300S

ACC
Accessories such as the radio can operate, but the engine is off.

ON
This is the normal operating position. All electrical systems are on.

START
This is the position for starting the engine using the starter motor. The key should be released from this position as soon as the engine starts.

Ignition key reminder
A buzzer sounds intermittently to remind you to remove the ignition key if it is in the ignition switch when the driver's door is opened.

Vehicle With Keyless Start System

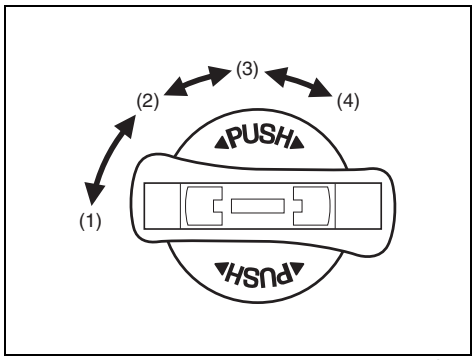

80JC010

The ignition switch can be operated without using an ignition key when the remote controller is in an area of the vehicle other than the rear luggage area. To turn the ignition switch, first push in the switch.

NOTE:
You must push in the ignition switch to turn it from the "LOCK" position to the "ACC" position. To return to the "LOCK" position from the "ACC" position, turn the ignition switch counterclockwise while pushing in the switch.

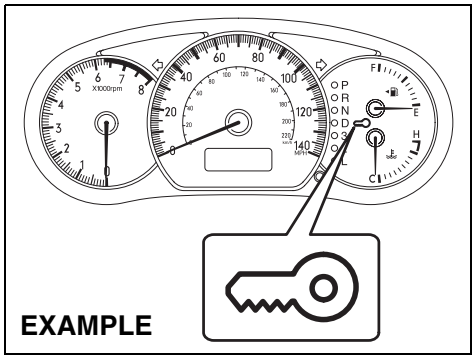

80J037

If the keyless start system blue indicator light illuminates on the instrument cluster, you can turn the ignition switch. If the red indicator light illuminates, you can not turn the ignition switch.

NOTE:
- *The ignition switch can be turned to the "ACC" position when the keyless start system blue indicator light illuminates. The blue indicator light will illuminate for several seconds when you push in the ignition switch and then will turn off to protect the system. In this case, you must release the ignition switch and push it in again to illuminate the blue indicator light.*

Downloaded from www.Manualslib.com manuals search engine

STEERING COLUMN CONTROLS

- *If the keyless start system red indicator light illuminates, the remote controller may not be in the vehicle or the battery of the remote controller may be unreliable.*

NOTE:
- *If the battery of the remote controller runs down or there are strong radio waves or noise, the operating range may be narrower or the remote controller may be inoperative.*
- *If the remote controller is too close to the door glass, it may not operate.*
- *The ignition switch may not turn when the remote controller is on the instrument panel, in the glove box, in the door pocket, in the sun visor or on the floor.*

CAUTION

The remote controller is a sensitive electronic instrument. To avoid damaging the remote controller:
- **Do not expose it to impacts, moisture or high temperature such as by leaving it on the dashboard under direct sunlight.**
- **Keep the remote controller away from magnetic objects such as a television.**

You can also turn the ignition switch by inserting the ignition key into the slot.

The ignition switch has the following four positions:

LOCK (1)
This is the normal parking position. It is the only position in which the key can be removed. It locks the ignition, and prevents normal use of the steering wheel.

For vehicles with an automatic transaxle, the gearshift lever must be in the “P” (Park) position to turn the key to the “LOCK” position.

To release the steering lock, turn the ignition switch clockwise to one of the other positions. If you have trouble turning the ignition switch to unlock the steering, try turning the steering wheel slightly to the right or left while turning the switch.

NOTE:
You must push the ignition switch in to turn it to the “ACC” position. Also you must push the ignition switch in to return it to the “LOCK” position.

ACC (2)
Accessories such as the radio can operate, but the engine is off.

ON (3)
This is the normal operating position. All electrical systems are on.

START (4)
This is the position for starting the engine using the starter motor. The switch should be released from this position as soon as the engine starts.

Ignition switch reminder
(When using the keyless start system)
A buzzer sounds intermittently to remind you to return the ignition switch to the “LOCK” position if it is in the “ACC” position when the driver’s door is opened.

Ignition key reminder
(When using the ignition key)
A buzzer sounds intermittently to remind you to remove the ignition key if it is in the ignition switch when the driver’s door is opened.

Downloaded from www.Manualslib.com manuals search engine

Lighting/Turn Signal Control Lever: 8
Windshield Wiper and Washer Lever: 8

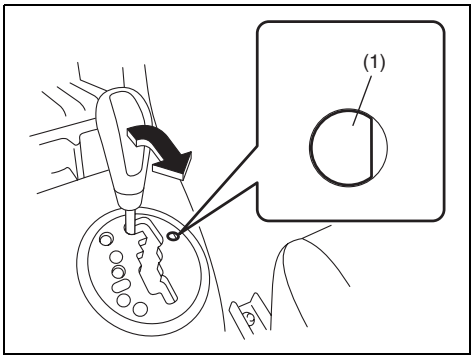

62J083

If the gearshift lever can not be shifted out of “P” (Park) in the normal way, removing the cover (1) and pushing the release button using a key or some other flat end object with the key in the “ON” or “ACC” position will permit movement of the gearshift lever out of “P” (see “If You Can Not Shift Automatic Transaxle Gearshift Lever Out of “P” (PARK)” in the INDEX). The gearshift lever can be moved back to “P” without pushing the release button.

To release the steering lock, insert the key or use the keyless start system and turn the ignition switch clockwise to one of the other positions. If you have trouble turning the key to unlock the steering, try turning the steering wheel slightly to the right or left while turning the key.

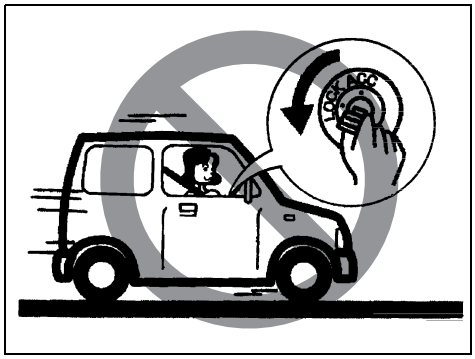

81A297S

⚠ WARNING

- **For manual transaxle vehicles, never remove the ignition key while the vehicle is moving. The steering wheel will lock and you will not be able to steer the vehicle.**
- **Always remove the ignition key when leaving the vehicle even if a short time. Also do not leave children or pets alone in a parked vehicle. Unattended children could cause accidental movement of the vehicle or could tamper with power windows. Children or pets could suffer from heatstroke in warm or hot weather, which could result in severe injury or even death.**

CAUTION

- **Do not turn the starter motor for more than 15 seconds at a time. If the engine does not start, wait 15 seconds before trying again. If the engine does not start after several attempts, check the fuel and ignition systems or consult your SUZUKI dealer.**
- **Do not leave the ignition switch in the “ON” position if the engine is not running or the battery will discharge.**

Downloaded from www.Manualslib.com manuals search engine

STEERING COLUMN CONTROLS

Lighting/Turn Signal Control Lever

Lighting Operation

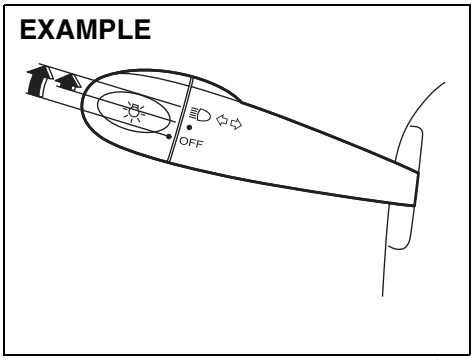

80JC031

To turn the lights on or off, twist the knob on the end of the lever. There are three positions: in the “OFF” position all lights are off; in the middle position the front parking lights, taillights, license plate light, and instrument lights are on, but the headlights are off; in the third position the headlights come on in addition to the other lights.

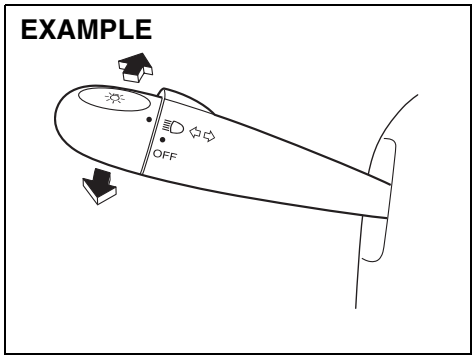

80JC032

With the headlights on, push the lever forward to switch to the high beams (main beams) or pull the lever toward you to switch to the low beams. When the high beams (main beams) are on, a light on the instrument panel will come on. To momentarily activate the high beams (main beams) as a passing signal, pull the lever slightly toward you and release it when you have completed the signal.

Daytime Running Light (D.R.L.) System

The headlights light, but are dimmer than the low beam, when the following three conditions are all met. Also, the D.R.L. indicator light on the instrument panel comes on.

Conditions for D.R.L. system operation:
1) The engine is running.
2) The parking brake is released.
3) The lighting switch is at either the “OFF” or the “Middle” position.

NOTE:
Be sure to turn the lighting switch to the third position at night or at any time of the day when driving or weather conditions require the headlights to operate at full brightness and the taillights to be on.

Lights “On” reminder (if equipped)

A buzzer/chime sounds to remind you to turn off the lights if they are left on when the ignition key is removed and the driver’s door is opened.

Downloaded from www.Manualslib.com manuals search engine

Rear Window Wiper/Washer Switch: 8
Tilt Steering Lock Lever: 6
Cruise Control: 7, 8

Turn Signal Operation

With the ignition switch in the “ON” position, move the lever up or down to activate the right or left turn signals.

Normal turn signal

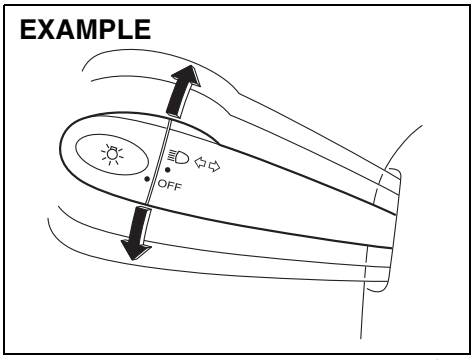

80JC033

Move the lever all the way upward or downward to signal. When the turn is completed, the signal will cancel and the lever will return to its normal position.

Lane change signal

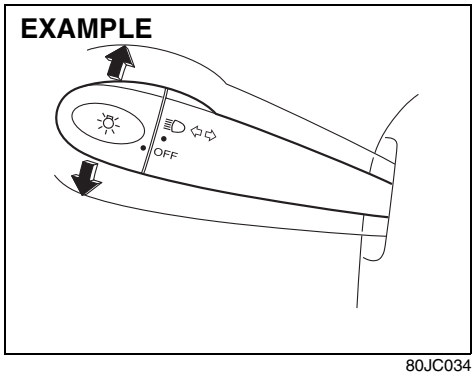

80JC034

Some times, such as when changing lanes, the steering wheel is not turned far enough to cancel the turn signal. For convenience, you can flash the turn signal by moving the lever part way and holding it there. The lever will return to its normal position when you release it.

Windshield Wiper and Washer Lever

Windshield Wipers

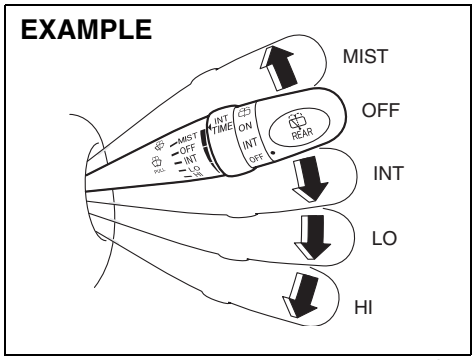

80JC035

To turn the windshield wipers on, move the lever down to one of the three operating positions. In the “INT” position (if equipped), the wipers operate intermittently. The “INT” position is very convenient for driving in mist or light rain. In the “LO” position, the wipers operate at a steady low speed. In the “HI” position, the wipers operate at a steady high speed. To turn off the wipers, move the lever back to the “OFF” position.
Move the lever up and hold it to the “MIST” position, the windshield wipers will turn on continuously at low speed.

Downloaded from www.Manualslib.com manuals search engine

STEERING COLUMN CONTROLS

EXAMPLE

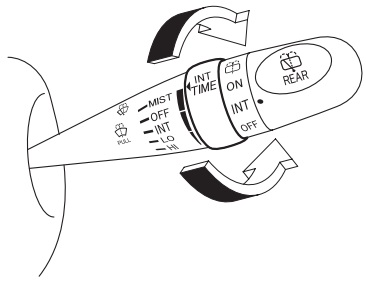

80JC036

If the lever is equipped with the “INT TIME” control, turn the control forward or rearward to adjust the intermittent wiper operation to the desired interval.

Windshield Washer

EXAMPLE

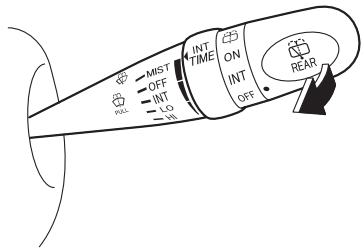

80JC037

To spray windshield washer fluid, pull the lever toward you. The windshield wipers will automatically turn on at low speed if they are not already on and the “INT” position is equipped.

⚠ WARNING

- **To prevent windshield icing in cold weather, turn on the defroster to heat the windshield before and during windshield washer use.**
- **Do not use radiator antifreeze in the windshield washer reservoir. It can severely impair visibility when sprayed on the windshield, and can also damage your vehicle’s paint.**

CAUTION

To help prevent damage to the windshield wiper and washer system components, you should take the following precautions:

- **Do not continue to hold in the lever when there is no windshield washer fluid being sprayed or the washer motor can be damaged.**
- **Do not attempt to remove dirt from a dry windshield with the wipers or you can damage the windshield and the wiper blades. Always wet the windshield with washer fluid before operating the wipers.**
- **Clear ice or packed snow from the wiper blades before using the wipers.**
- **Check the washer fluid level regularly. Check it often when the weather is bad.**
- **Only fill the washer fluid reservoir 3/4 full during cold weather to allow room for expansion if the temperature falls low enough to freeze the solution.**

Downloaded from www.Manualslib.com manuals search engine

Cruise Control: 7, 8
Remote Audio Controls:
Horn: 6

Rear Window Wiper/Washer Switch (if equipped)

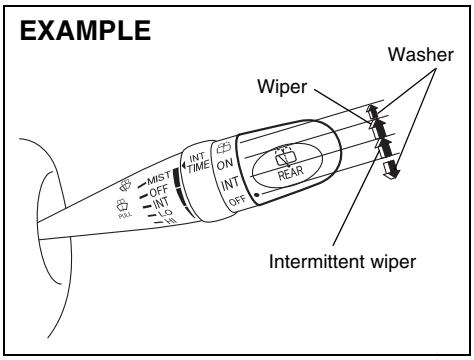

80JC038

To turn the rear wiper on, twist the rear wiper switch on the end of the lever forward to the “ON” position. If your vehicle is equipped the “INT” position, the rear wiper operates intermittently when you twist the switch forward to the “INT” position. To turn the rear wiper off, twist the switch rearward to the “OFF” position.

With the rear wiper in the “OFF” position, twist the switch rearward and hold it there to spray window washer fluid.

With the rear wiper in the “ON” position, turn the switch forward and hold it there to spray window washer fluid.

CAUTION

Clear ice or snow from the rear window and rear wiper blade before using the rear wiper. Accumulated ice or snow could prevent the wiper blade from moving, causing damage to the wiper motor.

Tilt Steering Lock Lever (if equipped)

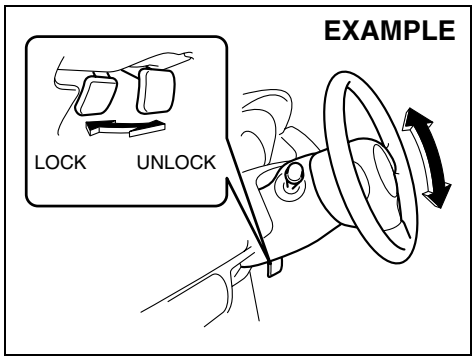

63J026

The lock lever is located under the steering column. To adjust the steering wheel height:

1) Pull up the lock lever to unlock the steering column.
2) Adjust the steering wheel to the desired height and lock the steering column by push down the lock lever.
3) Try moving the steering wheel up and down to make sure it is securely locked in position.

Downloaded from www.Manualslib.com manuals search engine

⚠ WARNING

Never attempt to adjust the steering wheel height while the vehicle is moving or you could lose control of the vehicle.

Cruise Control (if equipped)

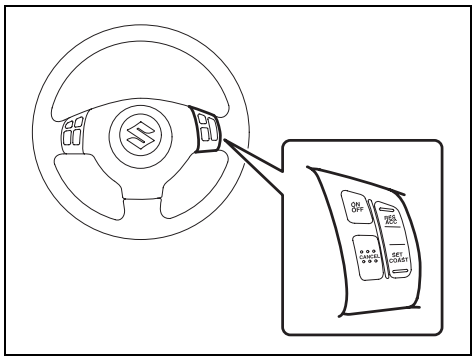

80J025

The cruise control system allows you to maintain a steady speed without keeping your foot on the accelerator pedal. The controls for operating the cruise control system are on the steering wheel. You can use the cruise control system at speeds of about 40 km/h (25 mph) or higher.

⚠ WARNING

To help avoid loss of vehicle control, do not use the cruise control system when driving in heavy traffic, on slippery or winding roads, or on steep downgrades.

CRUISE

52D113

When you push the “ON/OFF” switch, the system is on and a “CRUISE” indicator light on the instrument cluster will be on.

SET

65D474

When the vehicle’s speed is controlled by the cruise control system, a “SET” indicator light on the instrument cluster will be on.

Downloaded from www.Manualslib.com manuals search engine

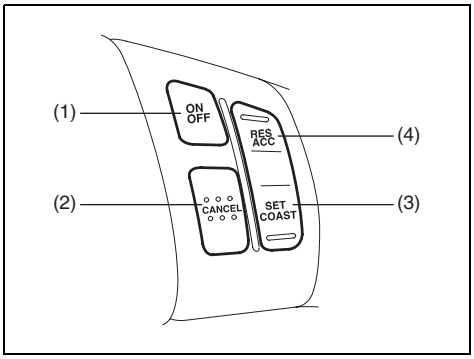

80J026

To Set Cruising Speed

Turn on the cruise control system by pushing the "ON/OFF" switch (1). Accelerate to the desired speed and push the "SET/COAST" switch (3). Take your foot off the accelerator pedal and the set speed will be maintained.

With the cruise control on, you can increase speed for passing by using the accelerator pedal. When you take your foot off the pedal, your vehicle will return to the set speed.

To Change Cruising Speed

To reset the cruise control to a slower speed, press repeatedly or hold in the "SET/COAST" switch (3) until the vehicle has slowed to the desired speed, then release the switch. The new speed will be maintained.

To reset the cruise control to a faster speed, use either of the following procedures:

- Press repeatedly or hold in the "RES/ACC" switch (4). Vehicle speed will steadily increase. When you release the switch, the new speed will be maintained.
- Accelerate to the desired speed using the accelerator pedal and push the "SET/COAST" switch (3). The new speed will be maintained.

To Cancel

To cancel cruise control operation, use one of the following procedures:

- Slightly depress the brake pedal or clutch pedal, or push the "CANCEL" switch (2). Cruise control operation will be canceled until you reset a cruising speed by pushing the "SET/COAST" switch (3) or "RES/ACC" switch (4).
- Push the "ON/OFF" switch (1). Cruise control operation will be canceled until you turn on the system by pushing the "ON/OFF" switch (1) again and reset a cruising speed by pushing the "SET/COAST" switch (3).

Cruise control operation will also be canceled any time the vehicle speed falls below 40 km/h (25 mph).

To "Resume" a Previously Set Speed

After canceling cruise control operation without turning off the "ON/OFF" switch (1), you can "resume" a previously set speed, by holding the "RES/ACC" switch (4) for about one second. When you release the switch, the vehicle will accelerate to and maintain the previously set speed.

NOTE:
If the "ON/OFF" switch (1) is turned off, the set speed in the memory is cleared and you can not use the Resume feature. In this case, reset your CRUISE speed.

Downloaded from www.Manualslib.com manuals search engine

Remote Audio Controls (if equipped)

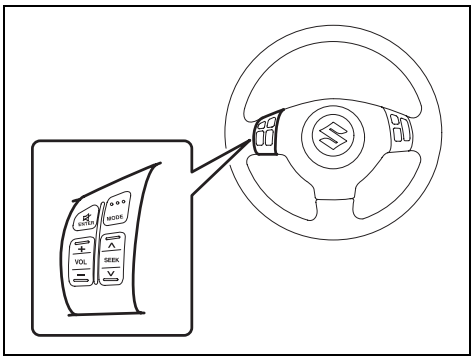

80J027

You can control basic functions of the audio system with the switches on the steering wheel. For details, refer to “Audio Systems” in the “INSTRUMENT PANEL” section.

Horn

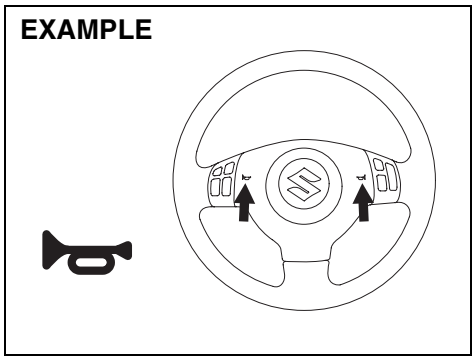

80J028

Press the horn pad on the steering wheel to sound the horn. The horn will sound with the ignition switch in any position.

Downloaded from www.Manualslib.com manuals search engine

INSTRUMENT PANEL

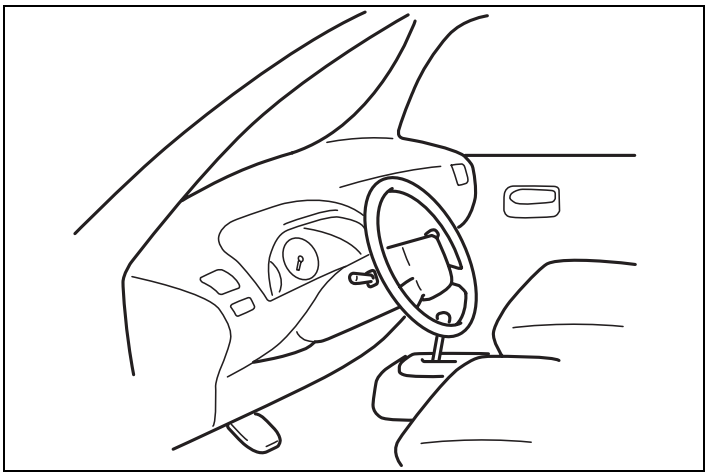

60G406

Instrument Panel 4-1
Instrument Cluster 4-2
Warning and Indicator Lights 4-3
A/T Selector Position Indicator (if equipped) 4-10
Speedometer/Odometer/Trip meter 4-11
Tachometer 4-12
Fuel Gauge 4-12
Temperature Gauge 4-13
Hazard Warning Switch 4-13
“ESP OFF” Switch (if equipped) 4-13
Instrument Light Brightness Control 4-14
2WD/i-AWD (intelligent All Wheel Drive) Switch
(if equipped) 4-14
Heated Rear Window and Heated Outside Rearview
Mirrors (if equipped) Switch 4-15
Fog Light Switch (if equipped) 4-16
Cigarette Lighter and Ashtray (if equipped) 4-16
Information Display 4-17
Glove Box 4-20
Heating and Air Conditioning System 4-21
Audio Systems 4-32

Downloaded from www.Manualslib.com manuals search engine

INSTRUMENT PANEL

Instrument Panel

1. Instrument cluster
2. Ignition switch
3. Lighting switch/Turn signal and dimmer switch
4. Windshield wiper and washer switch/ Rear window wiper and washer switch (if equipped)
5. Hazard warning switch
6. Other switches (if equipped)
7. Heater control panel
8. Audio (if equipped)
9. Cigarette lighter/ashtray or storage area
10. Hood release
11. Center ventilator
12. Side ventilator
13. Side defroster
14. Glove box
15. Fuse box
16. Air bag
17. Information display

EXAMPLE

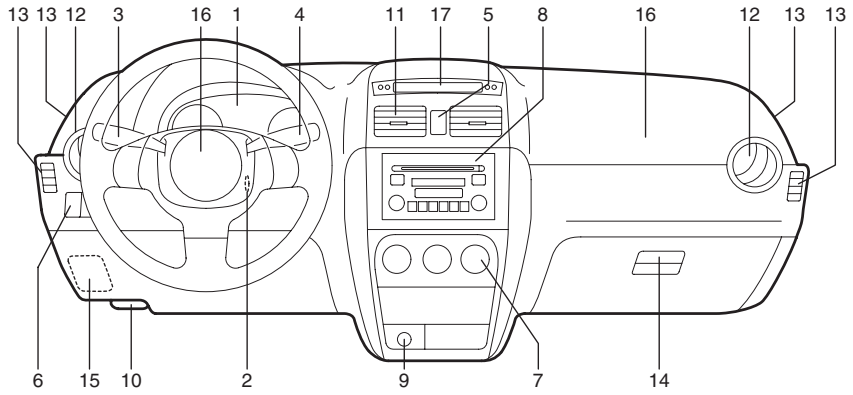

80J029

Downloaded from www.Manualslib.com manuals search engine

Instrument Cluster

1. Speedometer
2. Odometer/Trip meter
3. Odometer/Trip meter selector knob
4. Tachometer
5. Fuel gauge
6. Temperature gauge
7. Warning and indicator lights

EXAMPLE

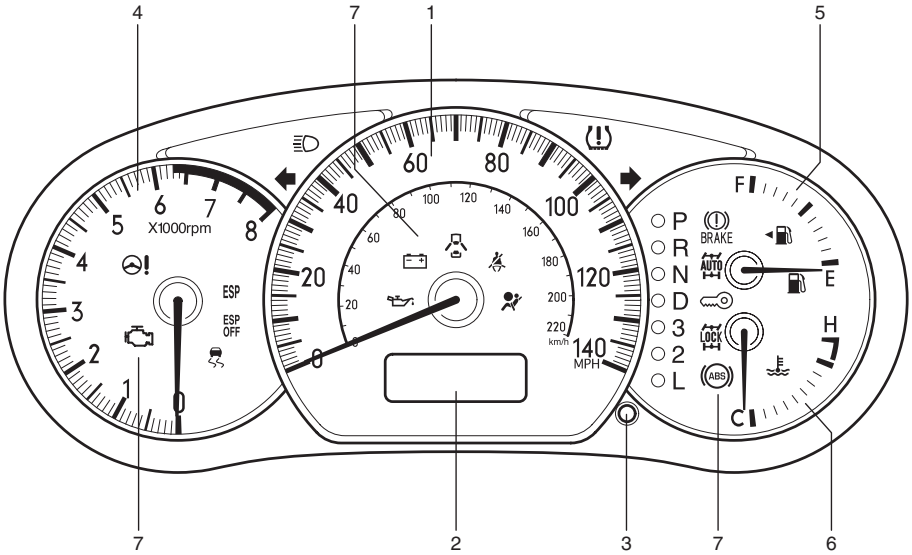

80JC011

Downloaded from www.Manualslib.com manuals search engine

Warning and Indicator Lights

Low Tire Pressure Warning Light

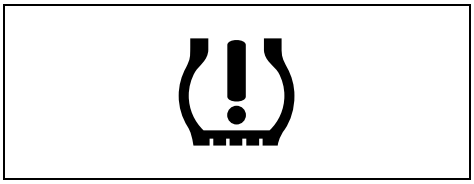

52D305

As an added safety feature, your vehicle has been equipped with a tire pressure monitoring system (TPMS) that uses a low tire pressure warning light to inform you when one or more of your tires is significantly under-inflated.

When the ignition switch is turned to the "ON" position, this light comes on briefly so you can check that the light is working.

When the low tire pressure warning light is lit, one or more of your tires is significantly under-inflated. You should stop and check your tires as soon as possible, and inflate them to the proper pressure as indicated on the vehicle's tire information placard. Driving on a significantly under-inflated tire causes the tire to overheat and can lead to tire failure. Under-inflation also reduces fuel efficiency and tire tread life, and may affect the vehicle's handling and stopping ability. Each tire, including the spare, should be checked at least once a month when cold and set to the recommended inflation pressure as specified in the vehicle placard and owner's manual.

The low tire pressure warning light is also used to inform you of a TPMS malfunction. When the system detects a malfunction, this light will flash for approximately one minute and then remain continuously illuminated. This sequence will be repeated approximately ten minutes after subsequent the ignition switch is turned on as long as the malfunction exists.

NOTE:
The low tire pressure warning light may not come on immediately if you have a sudden loss of air pressure.

⚠ WARNING

If the low tire pressure warning light does not come on when the ignition is turned to the "ON" position, or comes on and blinks while driving there may be a problem with the tire pressure monitoring system. Have your vehicle inspected by an authorized SUZUKI dealer. Even if the light turns off after blinking, indicating that monitoring system has recovered, make sure to have an authorized SUZUKI dealer check the system.

⚠ WARNING

The load rating of your tires is reduced at lower inflation pressures. If your tires become even moderately under-inflated, the vehicle load may exceed the load rating of the tires, which can lead to tire failure. The low tire pressure warning light will not alert you of this condition. The warning light will only come on when one or more of your tires become significantly under-inflated. Check and adjust your tire inflation pressure at least once a month. Refer to "Tires" in the "INSPECTION AND MAINTENANCE" section.

⚠ WARNING

If the low tire pressure warning light comes on and stays on, reduce your speed and avoid abrupt steering and braking. Stop in a safe place as soon as possible and check your tires.

- **If you have a flat tire, replace it with the spare tire. Refer to "Jacking Instructions" in the "EMERGENCY SERVICE" section. Refer to "Replacing Tires and/or Wheels" for instructions on how to restore normal operation of the tire pressure monitoring system after you have had a flat tire.**

(Continued)

Downloaded from www.Manualslib.com manuals search engine

⚠ WARNING

(Continued)

- **If one or more of your tires is under-inflated, adjust the inflation pressure in all of your tires to the recommended inflation pressure as soon as possible.**

Be aware that driving on a significantly under-inflated tire can cause the tire to overheat and can lead to tire failure, and may affect steering control and brake effectiveness. This could lead to an accident, resulting in severe injury or death.

Refer to “Tire Pressure Monitoring System” in the “OPERATING YOUR VEHICLE” section for additional details on the tire pressure monitoring system. Refer to “Tires” in the “INSPECTION AND MAINTENANCE” section for information on maintaining proper tire pressure.

Brake System Warning Light

65D477

This light comes on briefly when the ignition switch is turned to the “ON” position. The light also comes on under the following conditions: 1) when the parking brake is engaged and 2) when the fluid in the brake fluid reservoir falls below the specified level. The light should go out after fully releasing the parking brake, if the fluid level in the brake fluid reservoir is adequate.

If this light and the ABS warning light stay on, or come on simultaneously when driving, then there may be something wrong with both the rear brake proportioning valve function and anti-lock function of the ABS.

If the brake system warning light comes on while you are driving the vehicle, it may mean that there is something wrong with the vehicle’s brake system. If this happens, you should:

1) Pull off the road and stop carefully.

⚠ WARNING

Remember that stopping distance may be longer, you may have to push harder on the pedal, and the pedal may go down farther than normal.

2) Test the brakes by carefully starting and stopping on the shoulder of the road.
3) If you determine that it is safe, drive cautiously at low speed to the nearest dealer for repairs,

or

4) Have the vehicle towed to the nearest dealer for repairs.

⚠ WARNING

If any of the following conditions occur, you should immediately ask your SUZUKI dealer to inspect the brake system.

- **If the brake system warning light does not go out after the parking brake has been fully released.**
- **If the brake system warning light does not come on when the ignition switch is turned to the “ON” position.**
- **If the brake system warning light comes on at any time during vehicle operation.**

Downloaded from www.Manualslib.com manuals search engine

INSTRUMENT PANEL

NOTE:
Because the disc brake system is self-adjusting, the fluid level will drop as the brake pads become worn.
Replenishing the brake fluid reservoir is considered normal periodic maintenance.

Anti-Lock Brake System (ABS) Warning Light

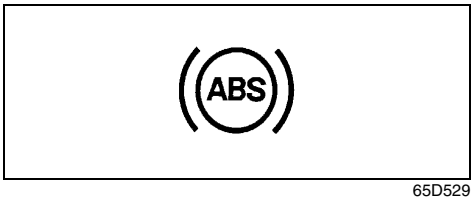

65D529

When the ignition switch is turned to the "ON" position, the light comes on briefly so you can check that the light is working. If the light stays on, or comes on when driving, there may be something wrong with the ABS.

If the ABS light and the brake system warning light stay on, or come on simultaneously when driving, then there may be something wrong with both the rear brake proportioning valve function and anti-lock function of the ABS.

If one of these happens, have the system inspected by your SUZUKI dealer. If the ABS becomes inoperative, the brake system will function as an ordinary brake system that has no ABS.

For details of the ABS, refer to "Anti-Lock Brake System (ABS)" in the "OPERATING YOUR VEHICLE" section.

SLIP Indicator Light (if equipped)

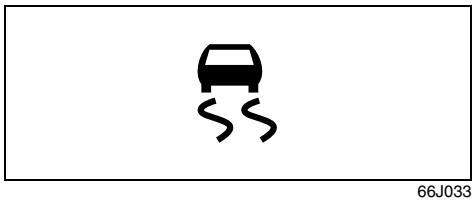

66J033

ESP® is a registered trademark of DaimlerChrysler AG.

This light blinks 5 times per second when one of the ESP® systems other than ABS is activated. If this light blinks, drive carefully.

When the ignition switch is turned to the "ON" position, the light comes on briefly so you can check that the light is working. If the light stays on, or comes on when driving and remains on, there may be something wrong with the ESP® systems (other than ABS). You should have the system inspected by an authorized SUZUKI dealer.

NOTE:
When you disconnect and re-connect the battery, ESP® system functions other than ABS will be deactivated and the slip indicator light will blink 1 time per second. For details on how to reactive the ESP® systems, refer to "SLIP Indicator Light" in the "OPERATING YOUR VEHICLE" section.
For details of the ESP® systems, refer to "Electronic Stability Program (ESP®)" in the "OPERATING YOUR VEHICLE" section.

⚠ WARNING

The ESP® systems cannot prevent accidents. Always drive carefully.

"ESP" (Electronic Stability Program) Warning Light (if equipped)

66J031

When the ignition switch is turned to the "ON" position, the light comes on briefly so you can check that the light is working. If the light stays on, or comes on when driving, there may be something wrong with the ESP® systems (other than ABS). You should have the system inspected by an authorized SUZUKI dealer.

Downloaded from www.Manualslib.com manuals search engine

For details of the ESP® systems, refer to "Electronic Stability Program (ESP®)" in the "OPERATING YOUR VEHICLE" section.

"ESP OFF" Indicator Light (if equipped)

66J032

When the ignition switch is turned to the "ON" position, this light comes on briefly so you can check that the light is working.

When the "ESP OFF" switch is pushed to turn off the ESP® systems (other than ABS), the "ESP OFF" light comes on and stays on.

For details of the ESP® systems, refer to "Electronic Stability Program (ESP®)" in the "OPERATING YOUR VEHICLE" section.

Oil Pressure Light

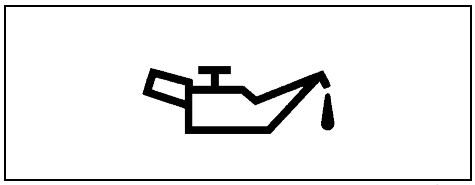

50G051

This light comes on when the ignition switch is turned to the "ON" position, and goes out when the engine is started. The light will come on and remain on if there is insufficient oil pressure. If the light comes on when driving, pull off the road as soon as you can and stop the engine. Check the oil level and add oil if necessary. If there is enough oil, the lubrication system should be inspected by your SUZUKI dealer before you drive the vehicle again.

CAUTION

- **If you operate the engine with this light on, severe engine damage can result.**
- **Do not rely on the Oil Pressure Light to indicate the need to add oil. Be sure to periodically check the engine oil level.**

Charging Light

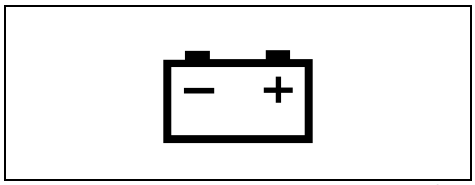

50G052

This light comes on when the ignition switch is turned to the "ON" position, and goes out when the engine is started. The light will come on and remain on if there is something wrong with the battery charging system. If the light comes on when the engine is running, the charging system should be inspected immediately by your SUZUKI dealer.

Driver's Seat Belt Reminder Light

60G049

If the driver's seat belt is unbuckled when the ignition switch is turned to the "ON" position, this light will come on and then blink. When the light comes on, a buzzer will also sound intermittently for about 6 seconds. The reminder will repeat several times under certain conditions until the

Downloaded from www.Manualslib.com manuals search engine

INSTRUMENT PANEL

driver's seat belt is buckled. After repeating several times, the reminder will be canceled even if the driver's seat belt remains unbuckled.

For details about the seat belt reminder, refer to "Seat Belts and Child Restraint Systems" in the "BEFORE DRIVING" section.

⚠ WARNING

It is absolutely essential that the driver and passengers wear their seat belts at all times. Persons who are not wearing seat belts have a much greater risk of injury if an accident occurs. Make a regular habit of buckling your seat belt before putting the key in the ignition.

AIR BAG Light

63J030

This light monitors inflators, crash sensors, seat belt pretensioners, the front passenger sensing system, and corresponding electrical circuits.
This light blinks for several seconds when the ignition switch is turned to the "ON" position so you can check if the light is working. The light will come on and stay on if there is a problem in the air bag system or the seat belt pretensioner system.

⚠ WARNING

If the AIR BAG light does not blink when the ignition switch is turned to the "ON" position or stays on or comes on when driving, the air bag system or the seat belt pretensioner system may not work properly. Have both systems inspected by an authorized SUZUKI dealer.

Malfunction Indicator Light

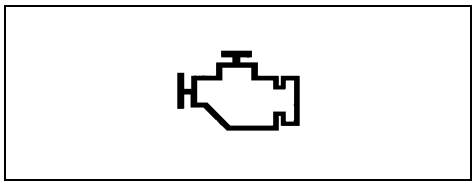

65D530

Your vehicle has a computer-controlled emission control system. A malfunction indicator light is provided on the instrument panel to indicate when it is necessary to have the emission control system serviced. The malfunction indicator light comes on when the ignition switch is turned to the "ON" position to let you know the light is working and goes out when the engine is started.

If the malfunction indicator light comes on or blinks when the engine is running, service to the emission control system is necessary. Bring the vehicle to your SUZUKI dealer to have the emission control system serviced right away and avoid hard acceleration until the service is performed.

CAUTION

Continuing to drive the vehicle when the malfunction indicator light is on or blinking can cause permanent damage to the vehicle's emission control system, and can affect fuel economy and driveability.

NOTE:
If the fuel filler cap is not installed fully, the electrical system gets wet (such as by driving through a deep puddle of water) or the fuel tank gets nearly empty, the malfunction indicator light may come on. If so, the light will go off after driving a few times after the fuel filler cap is installed fully, the electrical system dries out or the fuel tank is filled.

Downloaded from www.Manualslib.com manuals search engine

Speedometer/Odometer/Trip meter: 8
Meter Illumination Control:

Low Fuel Warning Light

54G343

If this light comes on, fill the fuel tank immediately.

NOTE:
The activation point of this light varies depending on road conditions (for example, slope or curve) and driving conditions because of fuel moving in the tank.

Electric Power Steering Light (if equipped)

79J039

This light comes on when the ignition switch is turned to the "ON" position, and goes out when the engine is started.

If this light comes on while driving, the power steering system may not work properly. Have the system inspected by your SUZUKI dealer.

NOTE:
If the power steering system does not work properly, you will feel heavier to steer but you still will be able to steer.

Open Door Warning Light

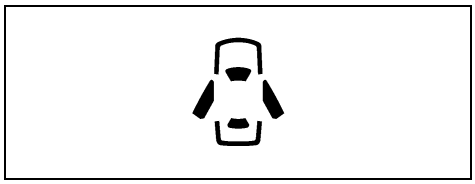

54G391

This light remains on until all doors (including the tailgate of SX4) are completely closed.

"CRUISE" Indicator Light (if equipped)

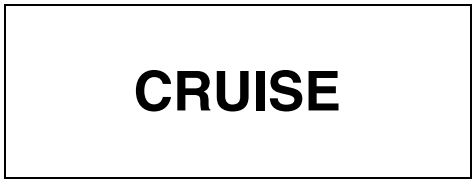

52D113

When the cruise control system is on, this light will be on.

"SET" Indicator Light (if equipped)

65D474

When the vehicle's speed is controlled by the cruise control system, this light will be on.

Keyless Start System Indicator Light (if equipped)

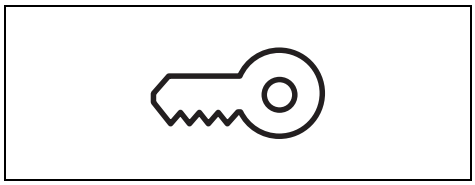

62J041

When you push the ignition switch for vehicle with the keyless start system, this light will come on in blue or red. If this light comes on in blue, you can turn the ignition switch without using an ignition key. If this light comes on in red, you can not turn the ignition switch without using an ignition key. For details, refer to "Ignition Switch" in the "STEERING COLUMN CONTROLS" section.

Downloaded from www.Manualslib.com manuals search engine

Tachometer:
Fuel Gauge:

If this light blinks in red, it reminds you that the remote controller is not in the vehicle. For details, refer to “Keyless Start System Remote Controller/Keyless Entry System Transmitter” in the “BEFORE DRIVING” section.

Turn Signal Indicators

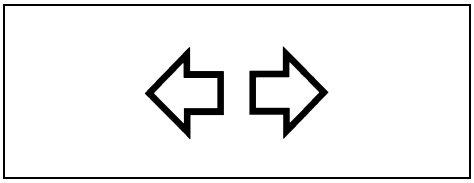

50G055

When you turn on the left or right turn signals, the corresponding green arrow on the instrument panel will flash along with the respective turn signal lights.
When you turn on the hazard warning switch, both arrows will flash along with all of the turn signal lights.

High Beam Indicator Light

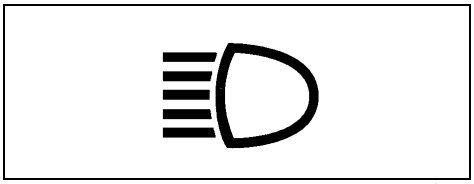

50G056

This indicator comes on when headlight high beams are turned on.

intelligent All Wheel Drive (i-AWD) AUTO Indicator Light (if equipped)

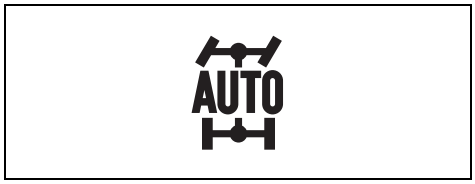

79J040

When the ignition switch is turned to the “ON” position, the light comes on briefly so you can check that the light is working. When the 2WD/i-AWD switch is in the “i-AWD AUTO” mode with the ignition switch in the “ON” position, the light comes on and stays on.

If the light and the “i-AWD LOCK” indicator light stay on or come on simultaneously when driving, there may be something wrong with the i-AWD system. Have the system inspected by an authorized SUZUKI dealer.

If the oil temperature of the parts for i-AWD system is high, this light will blink. The “i-AWD AUTO” or “i-AWD LOCK” mode will be changed to the “2WD” mode automatically to prevent a damage of the parts for i-AWD system.

NOTE:
If you restart the engine, the light will stop blinking temporarily.

For details, refer to “Using the 2WD/i-AWD Switch” in the “OPERATING YOUR VEHICLE” section.

NOTE:
When the vehicle speed is increased, the “i-AWD LOCK” mode will be changed to the “i-AWD AUTO” mode automatically. The “i-AWD AUTO” indicator light will come on and stay on.

intelligent All Wheel Drive (i-AWD) LOCK Indicator Light (if equipped)

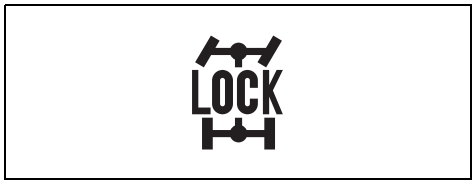

79J100

When the ignition switch is turned to the “ON” position, this light comes on briefly so you can check that the light is working.

The light comes on when the 2WD/i-AWD switch is changed to the “i-AWD LOCK” mode from the “i-AWD AUTO” mode.

If the light and the “i-AWD AUTO” indicator light stay on or come on simultaneously when driving, there may be something wrong with the i-AWD system. Have the system inspected by an authorized SUZUKI dealer.

Downloaded from www.Manualslib.com manuals search engine

Temperature Gauge: 8
Hazard Warning Switch: 8
Rear Window Defroster Switch:

NOTE:
- *When the vehicle speed is increased, the "i-AWD LOCK" mode will be changed to the "i-AWD AUTO" mode automatically. The "i-AWD AUTO" indicator light will come on and stay on.*
- *When the ignition switch is turned to the "OFF" position, the "i-AWD LOCK" mode is canceled.*

For details of the "i-AWD LOCK" mode, refer to "Using the 2WD/i-AWD Switch" in the "OPERATING YOUR VEHICLE" section.

CAUTION
Do not operate your vehicle in "i-AWD LOCK" mode on dry hard surfaces.

Daytime Running Light (D.R.L.) Indicator Light (if equipped)

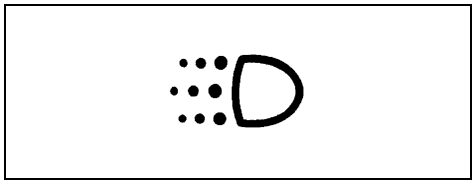

60B245

With the D.R.L. system, the headlights light, but are dimmer than the low beam, when the following three conditions are all met. Whenever the D.R.L. system is operating, the D.R.L. indicator light remains on.

Conditions for D.R.L. system operation
1) The engine is running.
2) The parking brake is released.
3) The lighting switch is at either the "OFF" or the "middle" position.

A/T Selector Position Indicator (if equipped)

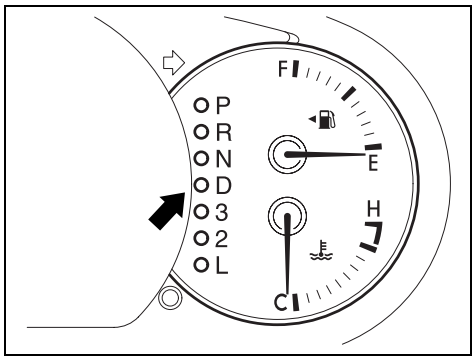

80J031

When the ignition switch is in the "ON" position, this indicator shows the selector position of automatic transaxle.

Downloaded from www.Manualslib.com manuals search engine

Outside Rearview Mirrors Defroster Switch:
Fog Light Switch: 8
Cigarette Lighter and Ashtray: 3, 8

INSTRUMENT PANEL

Speedometer/Odometer/Trip meter

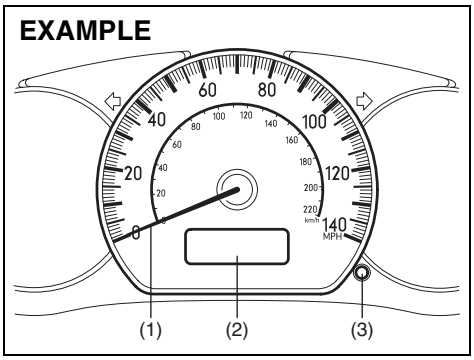

80J032

(1) Speedometer
(2) Odometer/Trip meter
(3) Indication selector knob

Speedometer
The speedometer indicates vehicle speed in MPH.

Odometer/Trip meter
When the ignition switch is turned to "ON", the display shows the odometer or trip meter. The odometer records the total distance the vehicle has been driven. The trip meter can be used to measure the distance traveled on short trips or between fuel stops.

CAUTION

Keep track of your odometer reading and check the maintenance schedule regularly for required services. Increased wear or damage to certain parts can result from failure to perform required services at the proper mileage intervals.

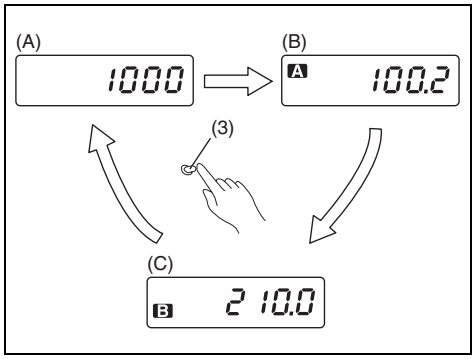

65D603

When the ignition switch is turned to "ON" with the lighting switch is in the "OFF" position, the display shows three types of indication; odometer (A), trip meter A (B) and trip meter B (C). Push the selector knob (3) quickly to switch the indication among the three.

You can use the two trip meters (A and B) independently.

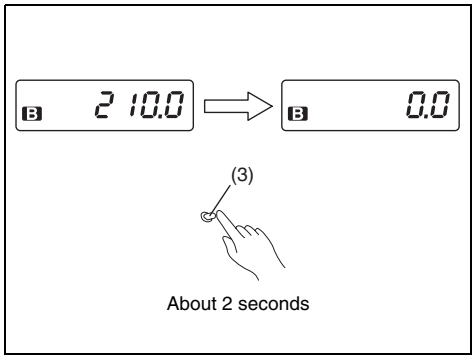

80J057

Hold in the selector knob for about 2 seconds to reset the trip meter to zero.

Downloaded from www.Manualslib.com manuals search engine

Cigarette Lighter and Ashtray: 3, 8
Information Display:

Tachometer

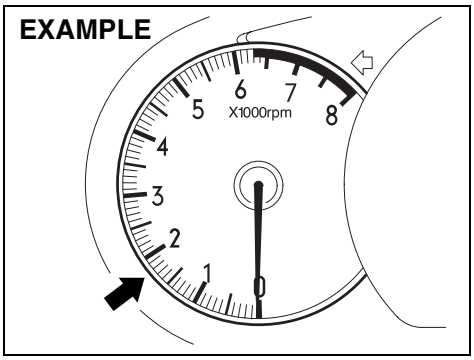

80J033

The tachometer indicates engine speed in revolutions per minute.

CAUTION
Never drive with the engine speed indicator in the red zone or severe engine damage can result.

Fuel Gauge

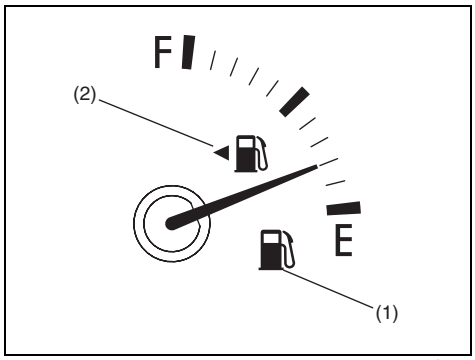

80JC039

When the ignition switch is in the “ON” position, this gauge gives an approximate indication of the amount of fuel in the fuel tank. “F” stands for full and “E” stands for empty.

If the indicator gets off the graduation of “E” (not character “E”), refill the tank as soon as possible.

NOTE:
The indicator moves a little depending on road conditions (for example, slope or curve) and driving conditions because of fuel moving in the tank.

If the low fuel warning light (1) comes on, fill the fuel tank immediately.

NOTE:
The activation point of the low fuel warning light (1) varies depending on road conditions (for example, slope or curve) and driving conditions because of fuel moving in the tank.

The mark (2) indicates that the fuel filler door is located on the left side of the vehicle.

Downloaded from www.Manualslib.com manuals search engine

INSTRUMENT PANEL

Temperature Gauge

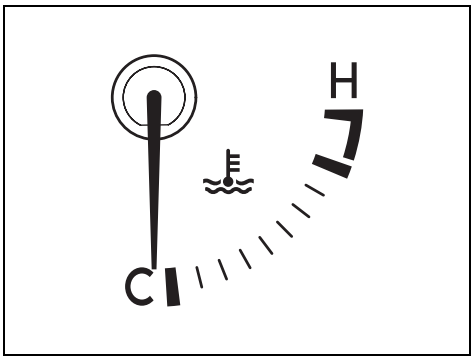

79J133

When the ignition switch is in the “ON” position, this gauge indicates the engine coolant temperature. Under normal driving conditions, the indicator should stay within the normal, acceptable temperature range between “H” and “C”. If the indicator approaches “H”, overheating is indicated. Follow the instructions for engine overheating in the “EMERGENCY SERVICE” section.

Hazard Warning Switch

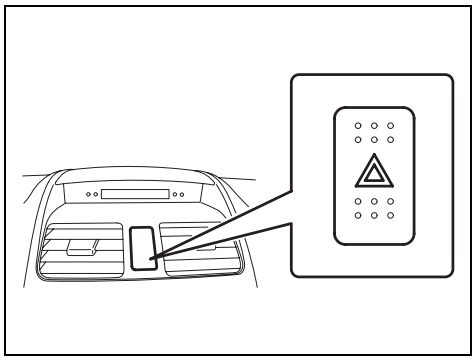

79J041

Push in the hazard warning switch to activate the hazard warning lights. All four turn signal lights and both turn signal indicators will flash simultaneously. To turn off the lights, push the switch again.

Use the hazard warning lights to warn other traffic during emergency parking or when your vehicle could otherwise become a traffic hazard.

“ESP OFF” Switch (if equipped)

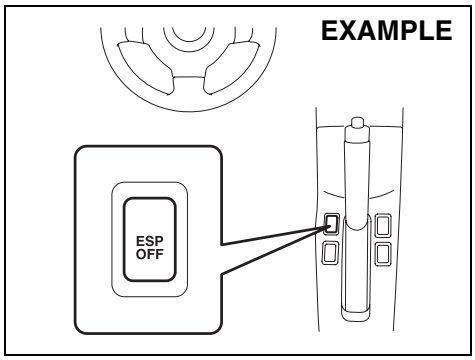

79J180

ESP® is a registered trademark of DaimlerChrysler AG.

The “ESP OFF” switch is located on the center console. You can turn the ESP® systems (other than ABS) on or off using this switch.

To turn off the ESP® systems (other than ABS), push and hold the “ESP OFF” switch until the “ESP OFF” indicator light comes on.
To turn on all of the ESP® systems, push the “ESP OFF” switch again. The “ESP OFF” indicator light will go out.

Downloaded from www.Manualslib.com manuals search engine

For details of the ESP® systems, refer to "Electronic Stability Program (ESP®)" in the "OPERATING YOUR VEHICLE" section.

Instrument Light Brightness Control

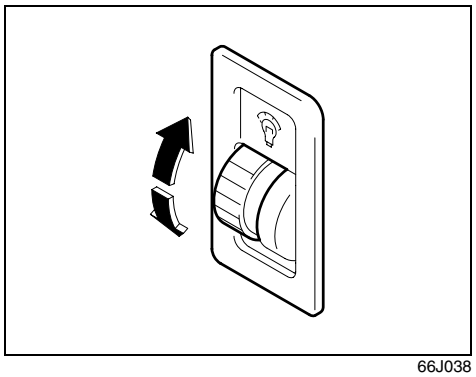

66J038

Your vehicle has a system to automatically dim the instrument panel lights when the ignition switch is in the "ON" position and the lighting switch is turned to either the second or third position. The level of brightness depends on the position of the brightness control thumbwheel.

To cancel the automatic dimming feature and maintain full brightness of lights other than the audio display, turn the instrument brightness control thumbwheel upward until click is heard. To activate the automatic dimming feature, turn the brightness control thumbwheel downward. When the thumbwheel is in the minimum brightness position, the instrument panel lights, except for the meter lights, are turned off.

2WD/i-AWD (intelligent All Wheel Drive) Switch (if equipped)

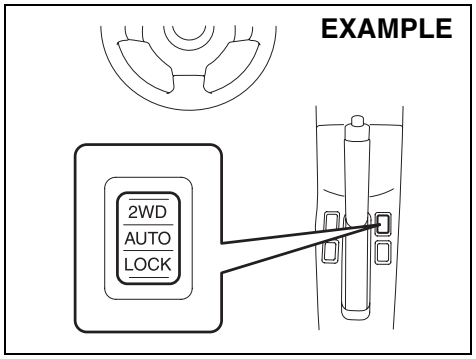

79J177

The 2WD/i-AWD switch is located on the center console.

For details on how to use the 2WD/i-AWD switch, refer to "Using the 2WD/i-AWD Switch" in the "OPERATING YOUR VEHICLE" section.

Downloaded from www.Manualslib.com manuals search engine

INSTRUMENT PANEL

Heated Rear Window and Heated Outside Rearview Mirrors (if equipped) Switch

Type 1

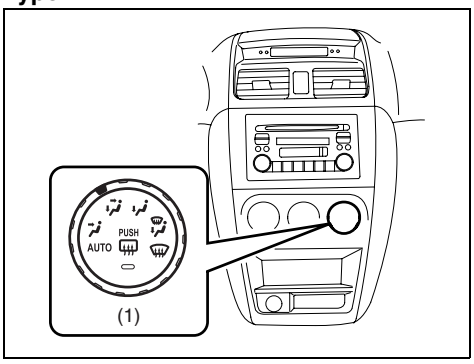

79J043

Type 2

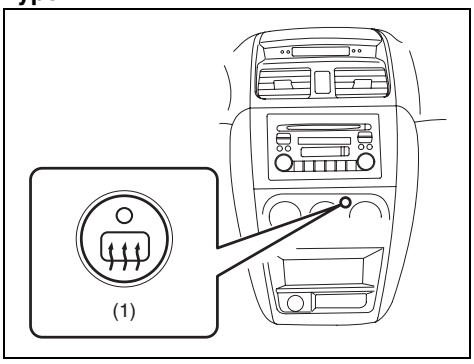

79J119

When the rear window is misted, push this switch (1) to clear the window.

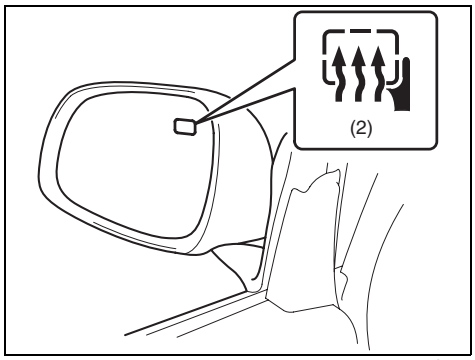

80JC040

If the driver's outside rearview mirror has the mark (2), it is also equipped with the heated outside rearview mirrors. When you push the switch (1), both the heated outside rearview mirrors and the heated rear window will operate simultaneously.

An indicator light will be lit when the defogger is on. The defogger will work only when the engine is running. To turn off the defogger, push the switch again.

CAUTION

The heated rear window and the heated outside rearview mirrors (if equipped) use a large amount of electricity. Be sure to turn off after the window and mirrors have become clear.

Downloaded from www.Manualslib.com manuals search engine

Fog Light Switch (if equipped)

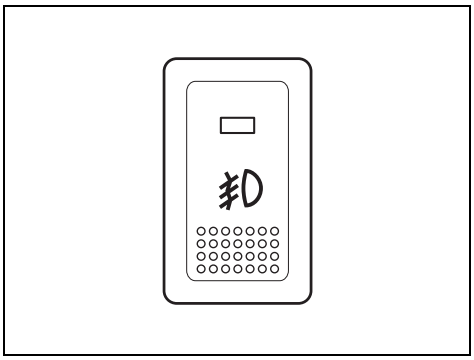

64J058

The front fog light comes on when the fog light switch is pushed in with the lighting switch turned to the third position and the beams set to the low beam position.

Cigarette Lighter and Ashtray (if equipped)

Cigarette Lighter (if equipped)

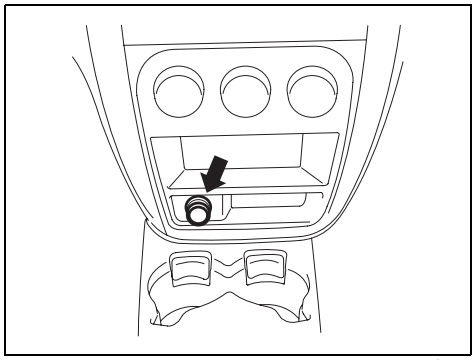

80JC041

The cigarette lighter will work when the ignition switch is in the “ACC” or “ON” position.

To use the cigarette lighter, push it all the way into the receptacle and release it. It will automatically heat up and will pop out to its normal position when it is ready for use.

CAUTION

Holding the cigarette lighter in can overheat and damage the lighter. Release the lighter after you push it in.

CAUTION

To avoid damage to the cigarette lighter socket, do not use it as an accessory power source. Some accessories’ power plug can damage the inner mechanism of the cigarette lighter socket.

Ashtray (if equipped)

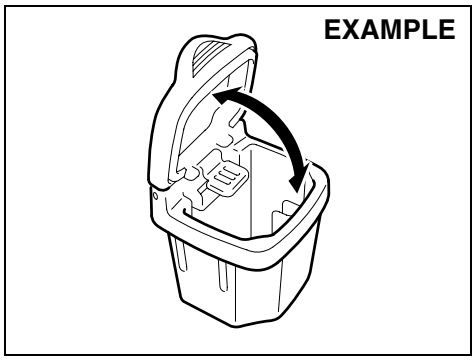

79J047

You can fit the ashtray into any of the cup holders on the center console.

⚠ WARNING

Make sure tobacco is fully extinguished before closing the ashtrays. Never throw waste in the ashtrays: it could create a fire hazard.

Downloaded from www.Manualslib.com manuals search engine

INSTRUMENT PANEL

Information Display

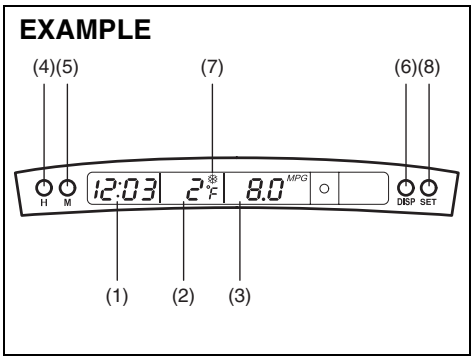

80J035

(1) Clock
(2) Thermometer
(3) Instantaneous fuel consumption/Average fuel consumption/Driving range
(4) “H” button
(5) “M” button
(6) “DISP” button
(7) Freezing mark
(8) “SET” button

Clock (1)

The clock is shown when the ignition switch is in the “ACC” or “ON” position.

To set the clock, follow the instructions below.

- To set the hour display, push the “H” button (4) repeatedly to advance the hour display. To advance the hour display quickly, hold in the “H” button (4) for about 1 second and continue holding.
- To set the minute display, push the “M” button (5) repeatedly to advance the minute display. To advance the minute display quickly, hold in the “M” button (5) for about 1 second and continue holding.

Thermometer (2)

The thermometer shows the outside temperature when the ignition switch is in the “ON” position.
If the outside temperature nears freezing, the mark (7) will come on when the display shows the outside temperature.

NOTE:
The thermometer will not indicate the actual outside temperature when driving at low speed, or when stopped.

You can change the unit indication of the thermometer between °F and °C.
To change the indication, follow the instructions below.

1) Hold in the “SET” button (8) for more than 2 seconds.
   The unit display of the thermometer will blink.

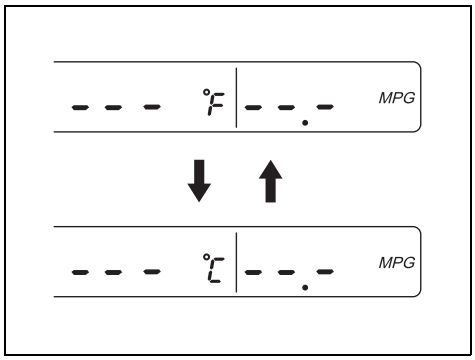

80J089

2) Push the “SET” button (8) quickly to change the indication between °F and °C as shown in the illustration.
3) Hold in the “SET” button (8) for more than 2 seconds, and the unit indication will stop blinking.
   If you don’t push the “SET” button (8) within about 8 seconds after the unit display starts blinking, the unit display will automatically stop blinking.

Fuel Consumption and Driving Range (3)

This display can be changed to show instantaneous fuel consumption, average fuel consumption, or driving range. Also, the display of fuel consumption can be turned off if you desire.

Downloaded from www.Manualslib.com manuals search engine

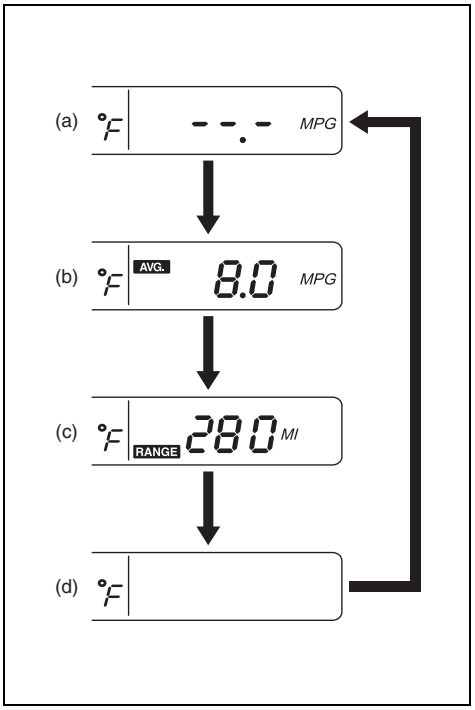

80J079

Every time you push the “DISP” button (6), the display will be changed among the following four displays.

(a) Instantaneous fuel consumption
(b) Average fuel consumption
(c) Driving range
(d) No display

Instantaneous fuel consumption (a)
If you selected instantaneous fuel consumption the last time you drove the vehicle, the display indicates “--.-” when the ignition switch is turned to the “ACC” or “ON” position. Unless the vehicle is moving, the display will indicate “--.-”.

Average fuel consumption (b)
If you selected average fuel consumption the last time you drove the vehicle, the display shows the last value of average fuel consumption when the ignition switch is turned to the “ACC” or “ON” position. Unless you reset the value of average fuel consumption, the display will show the value of average fuel consumption which includes average fuel consumption during previous driving.

To reset the value of average fuel consumption, hold in the “DISP” button (6) for more than 2 seconds when the display shows an average fuel consumption value. The display will indicate “--.-” and then will show a new average fuel consumption value after driving for a short time.

Driving range (c)
If you selected driving range the last time you drove the vehicle, the display shows “--.-” for a few seconds and then shows the current driving range when the ignition switch is turned to the “ON” position.

The driving range shown in the display is the approximate distance you can drive until the fuel gauge indicates “E” based current driving conditions.

When the remaining fuel in fuel tank reaches a low level, the display “--.-” will appear.
If the low fuel warning light comes on, fill the fuel tank immediately regardless of the value of driving range shown in the display.

As the driving range after refueling is calculated based on the last driving condition, the value is different each time you refuel.

NOTE:
- *When you reconnect the negative (-) terminal to the battery, the value of driving range will be shown after driving for a while.*
- *For a new vehicle with low mileage, the driving range may not be shown promptly in the display when begining to drive. The driving range will be shown after a while.*

NOTE:
The values of fuel consumption and driving range shown in the display are affected by conditions such as the following;
- *road condition*
- *surrounding traffic condition*
- *driving condition*
- *vehicle condition*
- *when the malfunction indicator light comes on or blinks*

Downloaded from www.Manualslib.com manuals search engine

INSTRUMENT PANEL

Unit indication of fuel consumption and driving range

You can change the unit indication of fuel consumption when selecting instantaneous fuel consumption or average fuel consumption in the display.
You can also change the unit indication of driving range when selecting driving range in the display.
To change the unit indication in the display, follow the instructions below.
You should operate the display before the vehicle moves.

1) Hold in the “SET” button (8) for more than 2 seconds.
   The unit display of the thermometer will blink.
2) Push the “M” button (5), and the unit display of fuel consumption (or driving range) will blink.

Fuel consumption

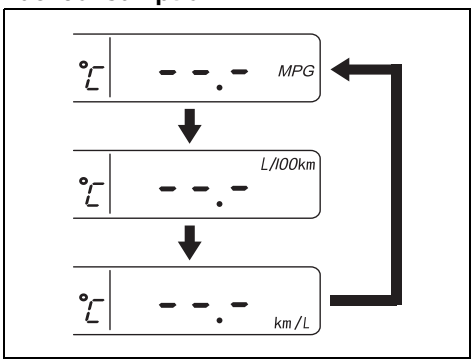

80J080

Driving range

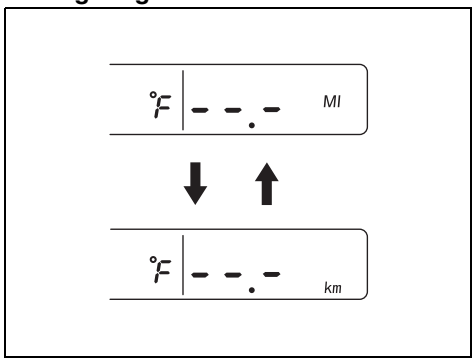

80J090

3) Push the “SET” button (8) quickly to change the indication as shown in the above illustrations.
4) Push the “SET” button (8) for more than 2 seconds, and the unit display will stop blinking and the display will stay on. If you don’t push the “DISP” button (6) within about 8 seconds, the unit display will automatically stop blinking and the display will stay on.

NOTE:
“MPG” is based on US gallons.

NOTE:
When you reconnect the negative (–) terminal to the battery, the information display will be reinitialized. Readjust the display. If you select driving range, the display will be shown after driving for a while.

Front Passenger’s Seat Belt Reminder Light

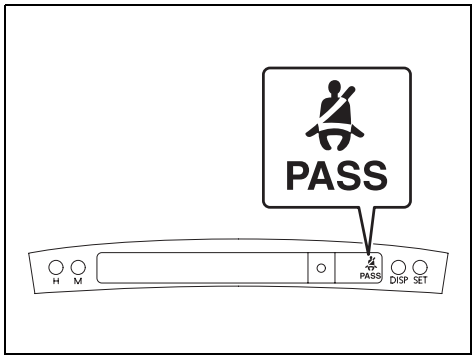

80J021

The front passenger’s seat belt reminder light is located in the information display. If there is a passenger in the front seat and the front passenger’s seat belt is unbuckled about 10 seconds after the ignition switch is turned to the “ON” position, this light will come on and then blink. When the light comes on, a buzzer will also sound intermittently for about 6 seconds. The reminder will repeat several times under certain conditions until the front passenger’s seat belt is buckled. After repeating several times, the reminder will be canceled even if the front passenger’s seat belt remains unbuckled.

Downloaded from www.Manualslib.com manuals search engine

For details about the seat belt reminder, refer to “Seat Belts and Child Restraint Systems” in the “BEFORE DRIVING” section.

⚠ WARNING

It is absolutely essential that the driver and passengers wear their seat belts at all times. Persons who are not wearing seat belts have a much greater risk of injury if an accident occurs. Make a regular habit of buckling your seat belt before putting the key in the ignition.

“PASS AIRBAG OFF” Indicator

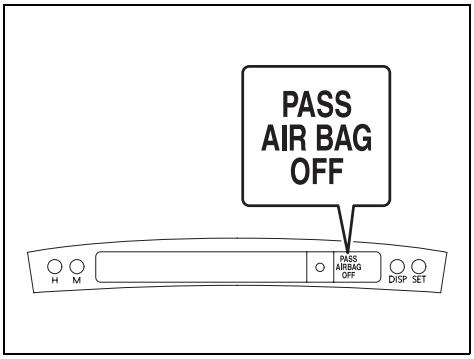

80J024

The “PASS AIRBAG OFF” indicator is located on the information display. When the ignition switch is turned to the “ON” position, this indicator comes on for several seconds to let you know the indicator is working.

This indicator will come on and remain on when the front passenger sensing system has turned off the front passenger’s air bag.

For details about the front passenger sensing system, refer to “Supplemental Restraint System (air bags)” in the “BEFORE DRIVIING” section.

Theft Deterrent Light

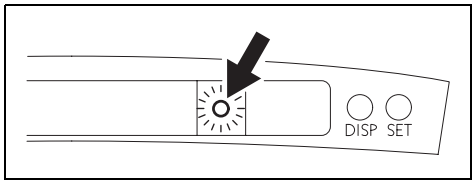

80J058

This light will blink with the ignition switch in the “OFF” or “ACC” position. The blinking light is intended to deter theft by leading others to believe that the vehicle is equipped with a security system.

Glove Box

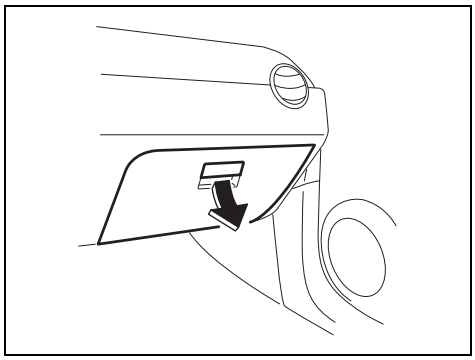

79J120

To open the glove box, pull the latch lever. To close it, push the lid until it latches securely.

⚠ WARNING

Never drive with the glove box lid open. It could cause injury if an accident occurs.

Downloaded from www.Manualslib.com manuals search engine

INSTRUMENT PANEL

Heating and Air Conditioning System

There are three types of heating and air conditioning systems as follows:

- Heating System
- Manual Heating and Air Conditioning System
- Automatic Heating and Air Conditioning System (Climate Control)

Air Outlet

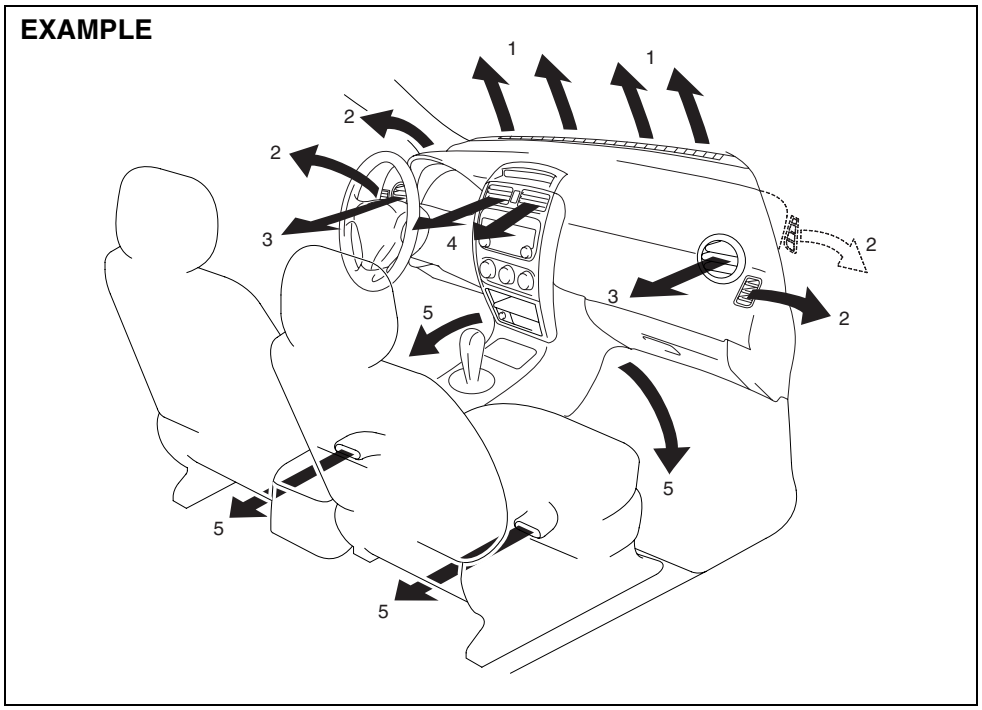

79J064

1. Windshield defroster outlet
2. Side defroster outlet
3. Side outlet
4. Center outlet
5. Floor outlet

Downloaded from www.Manualslib.com manuals search engine

Side outlet

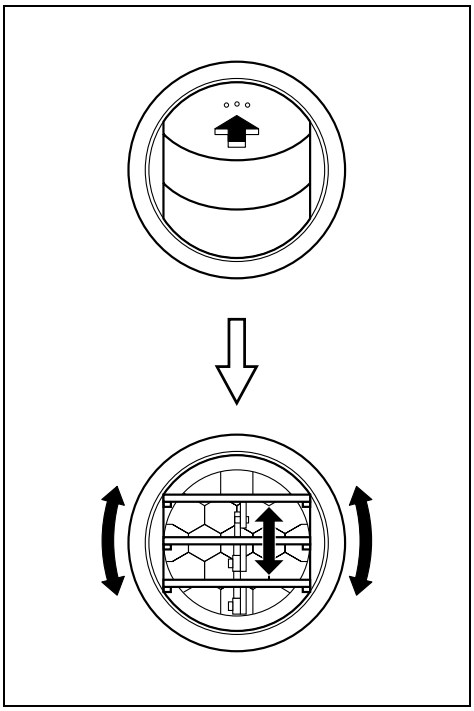

63J045

When “Open”, air comes out regardless of the air flow selector position.

Heating System

Description of Controls

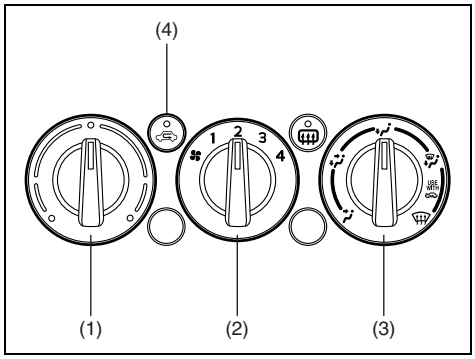

63J193

Temperature selector (1)
This is used to select the temperature by turning the selector.

Blower speed selector (2)
This is used to turn on the blower and to select blower speed by turning the selector.

Air flow selector (3)

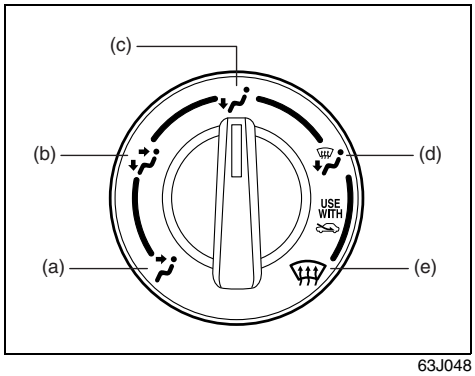

63J048

This is used to select one of the functions described below.

Ventilation (a)

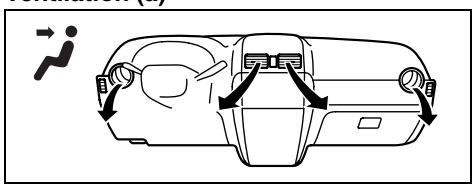

79J065

Temperature-controlled air comes out of the center and side air outlets.

Downloaded from www.Manualslib.com manuals search engine

INSTRUMENT PANEL

Bi-level (b)

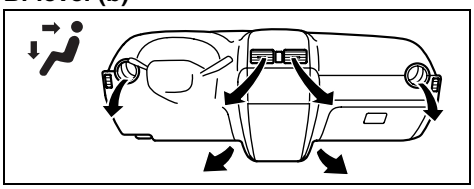

79J066

Temperature-controlled air comes out of the floor outlets and cooler air comes out of the center and side outlets. When the temperature selector (1) is in the fully COLD position or fully HOT position, however, the air from the floor outlets and the air from the center and side outlets will be the same temperature.

Heat (c)

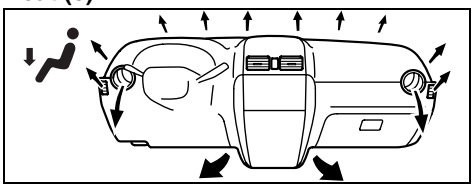

79J067

Temperature-controlled air comes out of the floor outlets and the side outlets, also comes out of the windshield defroster outlets and the side defroster outlets slightly.

Heat & defrost (d)

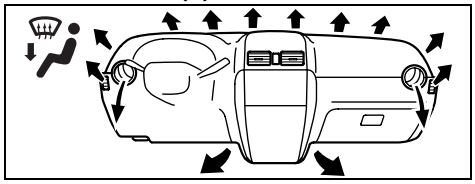

79J068

Temperature-controlled air comes out of the floor outlets, the windshield defroster outlets, the side defroster outlets and the side outlets.

Defrost (e)

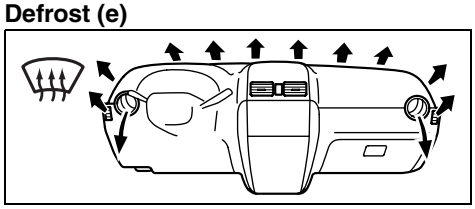

79J069

Temperature-controlled air comes out of the windshield defroster outlets, the side defroster outlets and the side outlets.

Air intake selector (4)

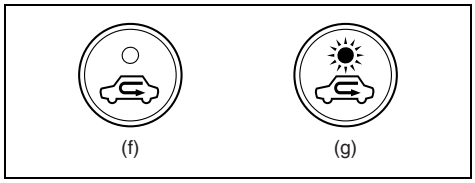

63J047

This selector is used to select the following modes.

Fresh Air (f)
When this mode is selected, the indicator light will go off and outside air is used.

Recirculated Air (g)
When this mode is selected, the indicator light will come on, outside air is shut out and inside air is recirculated. This mode is suitable when driving through dusty or polluted air such as in a tunnel, or when attempting to quickly cool down the interior.

“FRESH AIR” and “RECIRCULATED AIR” are switched alternately each time the air intake selector is pushed.

NOTE:
If you select “RECIRCULATED AIR” for an extended period of time, the air in the vehicle can become contaminated. Therefore, you should occasionally select “FRESH AIR”.

Downloaded from www.Manualslib.com manuals search engine

System Operating Instructions

Natural ventilation
Select “VENTILATION” and “FRESH AIR”, the temperature selector to the desired temperature position, and the blower speed selector to “OFF”. Fresh air will flow through the vehicle during driving.

Forced ventilation
The control settings are the same as for natural ventilation except you set the blower speed selector to a position other than “OFF”.

Normal heating (using outside air)
Select “HEAT” and “FRESH AIR”, the temperature selector to the desired temperature position and the blower speed selector to the desired blower speed position. Setting the blower speed selector to a higher blower speed position increases heating efficiency.

Quick heating (using recirculated air)
The control settings are the same as for normal heating except you select “RECIRCULATED AIR”. If you use this heating method for an extended period of time, the air in the vehicle can become contaminated and the windows can become misty. Therefore, use this method only for quick heating and change to the normal heating method as soon as possible.

Head cooled/Feet warmed heating
Select “BI-LEVEL” and “FRESH AIR”, the temperature selector to the desired temperature position, and the blower speed selector to the desired blower speed position. Unless the temperature selector is in the fully COLD position or fully HOT position, the air that comes out of the center and side outlets will be cooler than the air that comes out of the floor outlets.

Defrosting/Feet warmed heating
Select “HEAT & DEFROST” and “FRESH AIR”, the temperature selector to the desired temperature position, and the blower speed selector to HIGH. When the windshield has become clear, set the blower speed selector to the desired blower speed position.

Defrosting
Select “DEFROST” and “FRESH AIR”, the temperature selector to the desired temperature position (higher temperature provides more efficient defrosting), and the blower speed selector to HIGH. When the windshield has become clear, set the blower speed selector to the desired blower speed position.

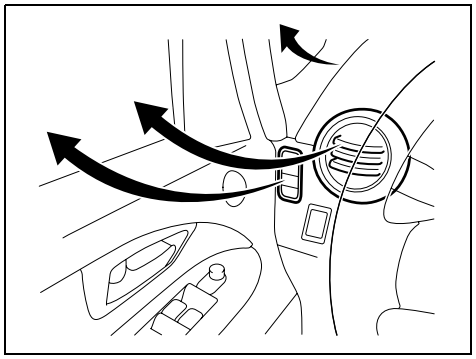

79J070

NOTE:
If you need maximum defrosting, adjust the temperature selector to the HOT end and adjust the side outlets so the air blows on the side window, in addition to the above ***Defrosting*** *steps.*

Downloaded from www.Manualslib.com manuals search engine

INSTRUMENT PANEL

Manual Heating and Air Conditioning System

Description of Controls

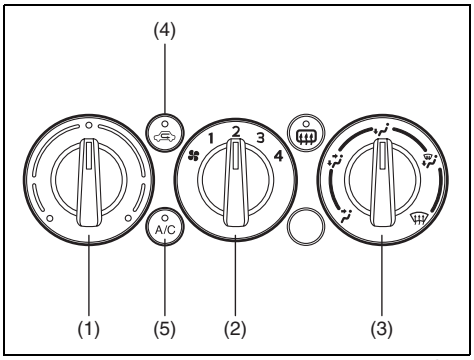

80JC042

Temperature selector (1)
This is used to select the temperature by turning the selector.

Blower speed selector (2)
This is used to turn on the blower and to select blower speed by turning the selector.

Air flow selector (3)

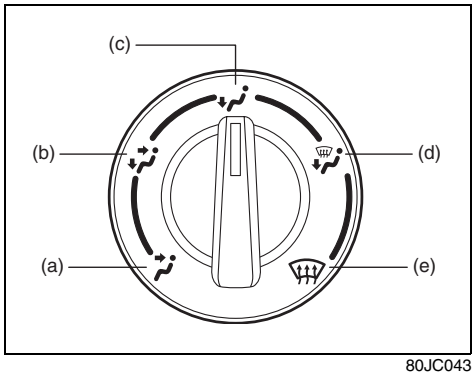

80JC043

This is used to select one of the functions described below.

Ventilation (a)

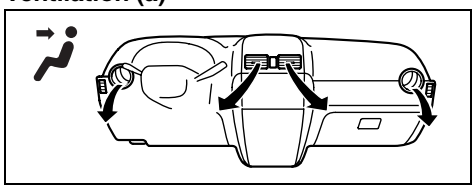

79J065

Temperature-controlled air comes out of the center and side air outlets.

Bi-level (b)

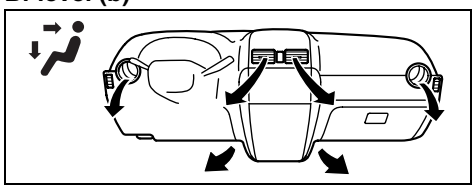

79J066

Temperature-controlled air comes out of the floor outlets and cooler air comes out of the center and side outlets. When the temperature selector (1) is in the fully COLD position or fully HOT position, however, the air from the floor outlets and the air from the center and side outlets will be the same temperature.

Heat (c)

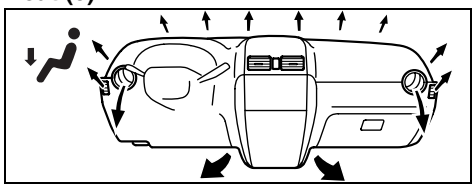

79J067

Temperature-controlled air comes out of the floor outlets and the side outlets, also comes out of the windshield defroster outlets and the side defroster outlets slightly.

Downloaded from www.Manualslib.com manuals search engine

Audio Systems:

Heat & defrost (d)

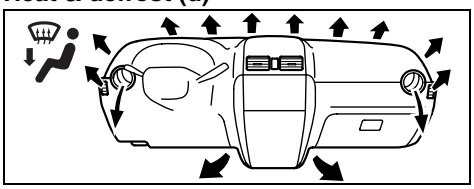

79J068

Temperature-controlled air comes out of the floor outlets, the windshield defroster outlets, the side defroster outlets and the side outlets.

Defrost (e)

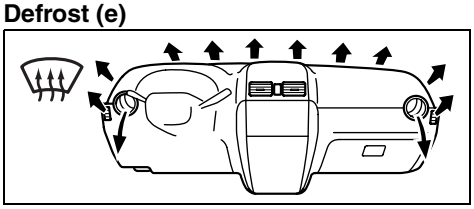

79J069

Temperature-controlled air comes out of the windshield defroster outlets, the side defroster outlets and the side outlets.

NOTE:
When the air flow selector (3) is turned either to "Heat & defrost (d)" or "Defrost (e)", the air conditioning system will come on and the "FRESH AIR" mode will be selected automatically.

Air intake selector (4)

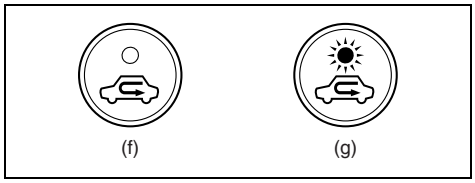

63J047

This selector is used to select the following modes.

Fresh Air (f)
When this mode is selected, the indicator light will go off and outside air is used.

Recirculated Air (g)
When this mode is selected, the indicator light will come on, outside air is shut out and inside air is recirculated. This mode is suitable when driving through dusty or polluted air such as in a tunnel, or when attempting to quickly cool down the interior.

"FRESH AIR" and "RECIRCULATED AIR" are switched alternately each time the air intake selector is pushed.

NOTE:
If you select "RECIRCULATED AIR" for an extended period of time, the air in the vehicle can become contaminated. Therefore, you should occasionally select "FRESH AIR".

Air conditioning switch (5)
To turn on the air conditioning system, push in the "A/C" switch and set the blower speed selector to a position other than "OFF". With this "A/C" switch operation, a indicator light will come on when the air conditioning system is on. To turn off the air conditioning system, push the "A/C" switch again.

During operation of the air conditioner, you may notice slight changes in engine speed. These changes are normal, the system is designed so that the compressor turns on or off to maintain the desired temperature.

Less operation of the compressor results in better fuel economy.

Downloaded from www.Manualslib.com manuals search engine

System Operating Instructions

Natural ventilation
Select “VENTILATION” and “FRESH AIR”, the temperature selector to the desired temperature position, and the blower speed selector to “OFF”. Fresh air will flow through the vehicle during driving.

Forced ventilation
The control settings are the same as for natural ventilation except you set the blower speed selector to a position other than “OFF”.

Normal heating (using outside air)
Select “HEAT” and “FRESH AIR”, the temperature selector to the desired temperature position and the blower speed selector to the desired blower speed position. Setting the blower speed selector to a higher blower speed position increases heating efficiency.

Quick heating (using recirculated air)
The control settings are the same as for normal heating except you select “RECIRCULATED AIR”. If you use this heating method for an extended period of time, the air in the vehicle can become contaminated and the windows can become misty. Therefore, use this method only for quick heating and change to the normal heating method as soon as possible.

Head cooled/Feet warmed heating
Select “BI-LEVEL” and “FRESH AIR”, the temperature selector to the desired temperature position, and the blower speed selector to the desired blower speed position. Unless the temperature selector is in the fully COLD position or fully HOT position, the air that comes out of the center and side outlets will be cooler than the air that comes out of the floor outlets.

Normal cooling
Turn on the “A/C” switch, set the air flow selector to “VENTILATION”, the temperature selector to the desired temperature position and the blower speed selector to the desired blower speed position. Setting the blower speed selector to a higher blower speed position increases cooling efficiency.
You can switch the air intake selector to either “FRESH AIR” or “RECIRCULATED AIR” as you desire. Choosing “RECIRCULATED AIR” increases cooling efficiency.

Quick cooling (using recirculated air)
The control settings are the same as for normal cooling except you select “RECIRCULATED AIR” and the highest blower speed.

NOTE:
- *If you select “RECIRCULATED AIR” for an extended period of time, the air in the vehicle can become contaminated. Therefore, you should occasionally select “FRESH AIR”.*
- *If your vehicle has been left in the sun with the windows closed, it will cool faster if you open the windows briefly while you operate the air conditioner with the air intake selector at “FRESH AIR” and the blower at high speed.*

Dehumidifying
Turn on the “A/C” switch, set the air flow selector to a desired air flow selector position, and select “FRESH AIR”, the temperature selector to the desired temperature position, and the blower speed selector to the desired blower speed position.

NOTE:
Because the air conditioner dehumidifies the air, turning it on will help keep the windows clear, even when blowing heated air using the “DEFROST” or “HEAT & DEFROST” functions.

Downloaded from www.Manualslib.com manuals search engine

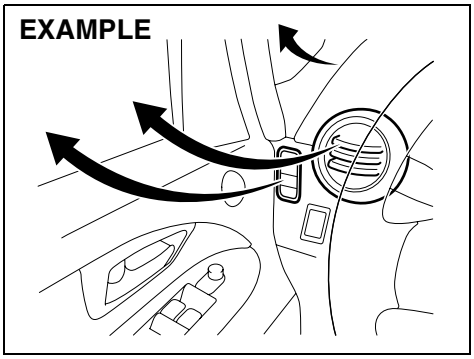

79J070

NOTE:
If you need maximum defrosting:
- *select "DEFROST" and "FRESH AIR",*
- *turn on the "A/C" switch,*
- *set the blower speed selector to HIGH,*
- *adjust the temperature selector to the HOT end, and*
- *adjust the side outlets so the air blows on the side windows.*

Maintenance

If you do not use the air conditioner for a long period, such as during winter, it may not give the best performance when you start using it again. To help maintain optimum performance and durability of your air conditioner, it needs to be run periodically. Operate the air conditioner at least once a month for one minute with the engine idling. This circulates the refrigerant and oil and helps protect the internal components.

Your air conditioner is equipped with air filters. Clean or replace them as specified in the "Maintenance Schedule" in the "INSPECTION AND MAINTENANCE" section. Have this job done by your SUZUKI dealer as the lower glove box must be lowered for this job.

NOTE:
Your vehicle uses the air conditioning refrigerant HFC-134a, commonly called "R-134a". R-134a replaced R-12 around 1993 for automotive applications. Other refrigerants are available, including recycled R-12, but only R-134a should be used in your vehicle.

CAUTION
Using the wrong refrigerant may damage your air conditioning system. Use R-134a only. Do not mix or replace the R-134a with other refrigerants.

Automatic Heating and Air Conditioning System (Climate Control)

Description of Controls

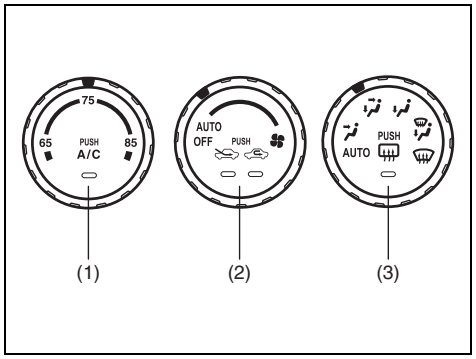

80J095

Downloaded from www.Manualslib.com manuals search engine

INSTRUMENT PANEL

Temperature selector/Air conditioning switch (1)

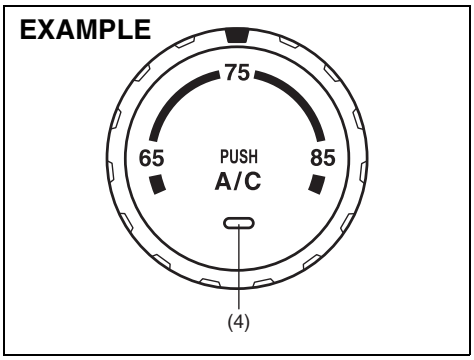

80J096

This is used to select the temperature by turning the selector.

Also, this is used to turn on and off the air conditioning system by pushing the switch. To turn on the air conditioning system, push in the switch and the A/C indicator light (4) will come on. To turn off the air conditioning system, push in the switch again and the A/C indicator light (4) will go off.

NOTE:
If the A/C indicator light (4) blinks, there is a problem in the heating system and/or air conditioning system. You should have the system inspected by an authorized SUZUKI dealer.

Blower speed selector/Air intake selector (2)

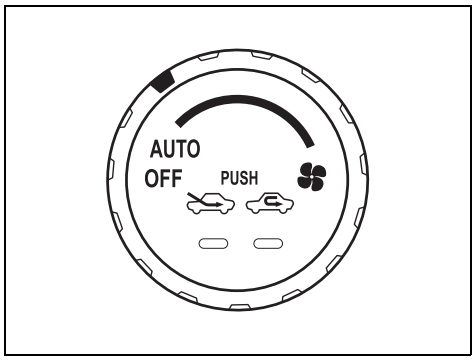

79J096

This is used to turn on the blower and to select blower speed.

If the selector is in “AUTO” position, the blower speed will vary as the climate control system maintains the selected temperature.

Also, this is used to select the following modes by pushing the selector.

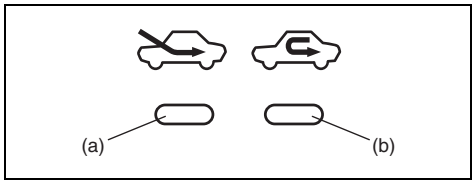

65D493

FRESH AIR
When this mode is selected, the indicator light (a) will come on and outside air is used.

RECIRCULATED AIR
When this mode is selected, the indicator light (b) will come on, outside air is shut out and inside air is recirculated. This mode is suitable when driving through the polluted air such as a tunnel, or attempting to quickly cool down.

“FRESH AIR” and “RECIRCULATED AIR” are switched alternately each time the air intake selector is pushed.

Downloaded from www.Manualslib.com manuals search engine

Audio Systems:

Air flow selector (3)

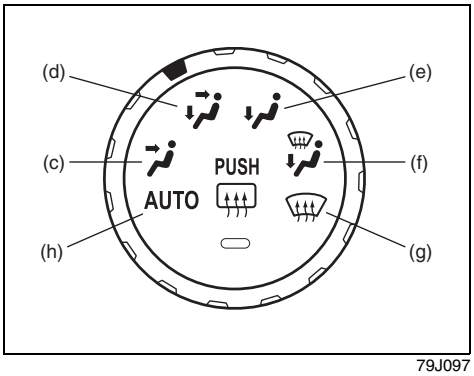

79J097

AUTO (h)
Temperature-controlled air comes out of various outlets automatically.

Ventilation (c)

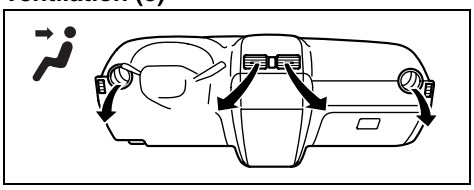

79J065

Temperature-controlled air comes out of the center and side air outlets.

Bi-level (d)

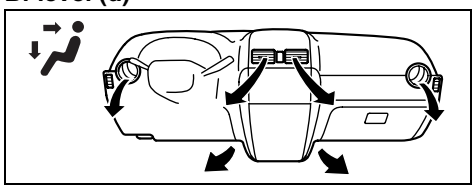

79J066

Temperature-controlled air comes out of the floor outlets and cooler air comes out of the center and side outlets. When the temperature selector (1) is in the fully COLD position or fully HOT position, however, the air from the floor outlets and the air from the center and side outlets will be the same temperature.

Heat (e)

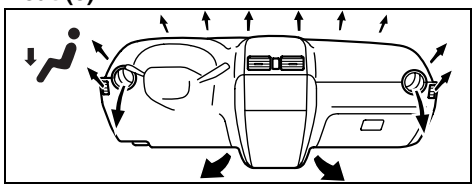

79J067

Temperature-controlled air comes out of the floor outlets and the side outlets, also comes out of the windshield defroster outlets and the side defroster outlets slightly.

Heat & defrost (f)

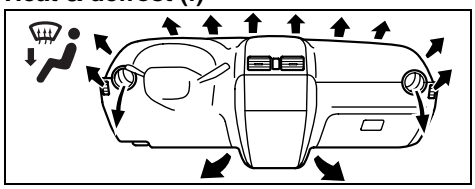

79J068

Temperature-controlled air comes out of the floor outlets, the windshield defroster outlets, the side defroster outlets and the side outlets.

Defrost (g)

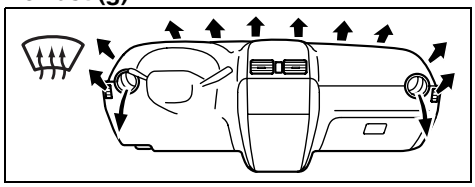

79J069

Temperature-controlled air comes out of the windshield defroster outlets, the side defroster outlets and the side outlets.

NOTE:
When the air flow selector (3) is turned either to "Heat & defrost (f)" or "Defrost (g)", the air conditioning system will come on and the "FRESH AIR" mode will be selected automatically. But in very cold weather, the air conditioning system will not turn on.

Downloaded from www.Manualslib.com manuals search engine

INSTRUMENT PANEL

System Operating Instructions

Automatic operation

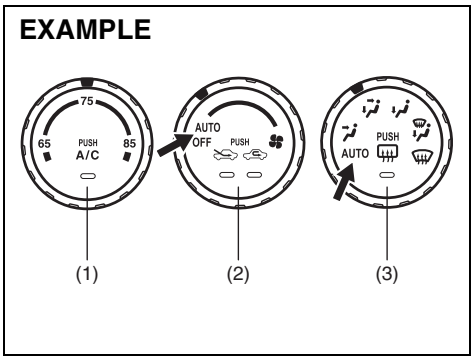

80J097

You can let the climate control system work automatically. To set the system in fully-automatic operation, follow the procedure below.

1) Set the desired temperature by turning the temperature selector (1).
2) Turn the blower speed selector (2) to the “AUTO” position.
3) Turn the air flow selector (3) to the “AUTO” position.

Then the blower speed selector/air intake selector (2) and air flow selector (3) are controlled automatically to maintain the set temperature.

The air conditioning switch (1) is to be selected manually according to your taste.

When you turn the air conditioning switch off, the climate control system cannot lower the inside temperature below outside temperature.

To turn the climate control system off, turn the blower speed selector (2) to the “OFF” position

NOTE:

- *To find your comfortable zone, start with the 75°F (25°C) setting.*
- *If you turn the temperature selector (1) to the highest or lowest limit, the climate control system will operate at the maximum cooling or heating and the blower will run at nearly full speed.*
- *To avoid blowing cold air in cold weather or hot air in hot weather, the system will delay turning on the blower until warmed or chilled air is available.*
- *If your vehicle has been left in the sun with the windows closed, it will cool faster if you open the windows briefly.*
- *Even under the automatic operation, you can set some of the blower speed selector/air intake selector (2) and air flow selector (3) into manual mode. Then the manually selected function is maintained preferentially, and the other functions remain under automatic operation.*
- *To return the air intake selector (2) to automatic operation when both the blower speed selector (2) and the air flow selector (3) are in the “AUTO” position, turn either the selector (2) or (3) to a position other than “AUTO”, then turn to the “AUTO” position again.*

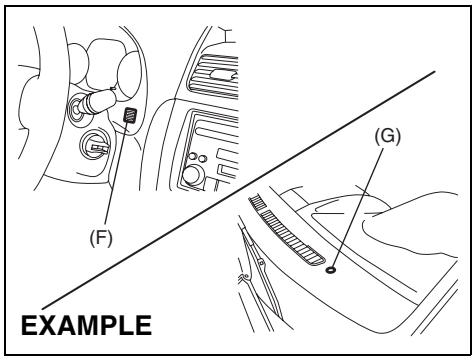

79J071

Be careful not to cover the interior temperature sensor (F) between the steering wheel and the climate control panel, or the solar sensor (G) located at the top of the driver’s side dashboard. These sensors are used by the automatic system to regulate temperature.

Manual operation

You can manually control the climate control system. Set the selectors to your desired position.

Downloaded from www.Manualslib.com manuals search engine

Audio Systems:

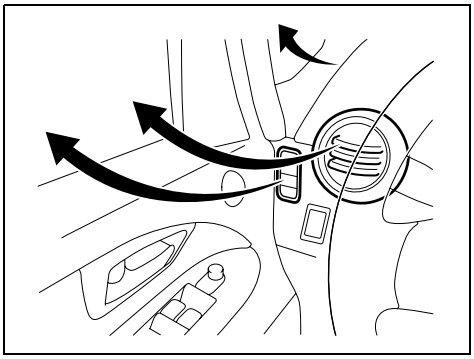

79J070

NOTE:
If you need maximum defrosting:
- *set the air flow selector to "DEFROST" (the air conditioning system will come on and the "FRESH AIR" mode will be selected automatically),*
- *set the blower speed selector to HIGH,*
- *adjust the temperature selector to the HOT end, and*
- *adjust the side outlets so the air blows on the side windows.*

Maintenance

If you do not use the air conditioner for a long period, such as during winter, it may not give the best performance when you start using it again. To help maintain optimum performance and durability of your air conditioner, it needs to be run periodically. Operate the air conditioner at least once a month for one minute with the engine idling. This circulates the refrigerant and oil and helps protect the internal components.

NOTE:
Your vehicle uses the air conditioning refrigerant HFC-134a, commonly called "R-134a". R-134a replaced R-12 around 1993 for automotive applications. Other refrigerants are available, including recycled R-12, but only R-134a should be used in your vehicle.

CAUTION

Using the wrong refrigerant may damage your air conditioning system. Use R-134a only. Do not mix or replace the R-134a with other refrigerants.

Audio Systems

There are two types of audio system as shown below:

Type 1

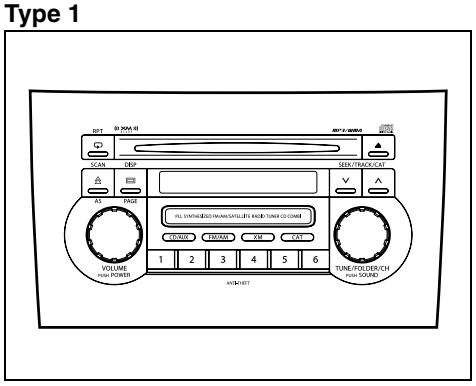

80J059

AM/FM/XM CD PLAYER WITH CD CHANGER CONTROL

Downloaded from www.Manualslib.com manuals search engine

INSTRUMENT PANEL

Type 2

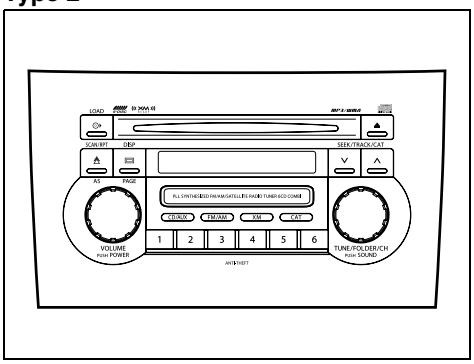

80J060

AM/FM/XM 6-CD PLAYER WITH CD CHANGER CONTROL

Precautions

- When the inside of the car is very cold and the player is used soon after switching on the heater, moisture may form on the disc or the optical parts of the player and proper playback may not be possible. If moisture forms on the disc, wipe it off with a soft cloth. If moisture forms on the optical parts of the player, do not use the player for about one hour, this will allow the condensation to disappear normally.
- Driving on extremely bumpy roads which cause severe vibrations may cause sound to skip.
- This unit uses a precision mechanism. Even in the event that trouble arises, never open the case, disassemble the unit, or lubricate the rotating parts. Please bring the unit to an authorized SUZUKI dealer or a Clarion service Department.

Cautions on Handling

52D274

This unit has been designed specifically for playback of compact discs bearing the mark (A).
No other discs can be played.

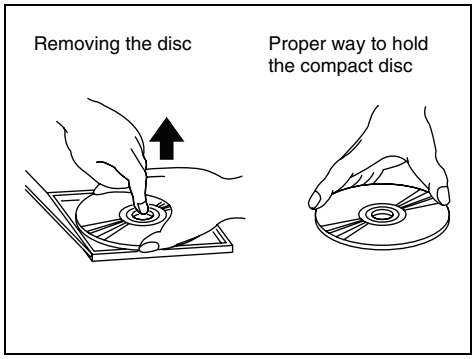

52D275

To remove the compact disc from its storage case, press down on the center of the case and lift the disc out, holding it carefully by the edges.

Always handle the compact disc by the edges.

Downloaded from www.Manualslib.com manuals search engine

Never touch the surface.

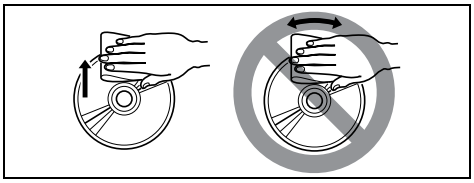

52D347

To remove fingermarks and dust, use a soft cloth, and wipe in a straight line from the center of the compact disc to the circumference.

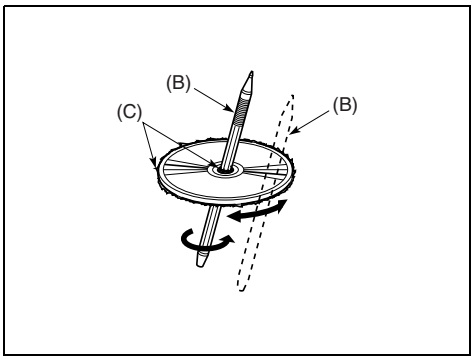

52D277

New discs may have some roughness around the edges. The unit may not work or the sound may skip if such discs are used. Use a ball-point pen (B), etc. to remove the roughness (C) from edges of the disc before insertion inside the unit.

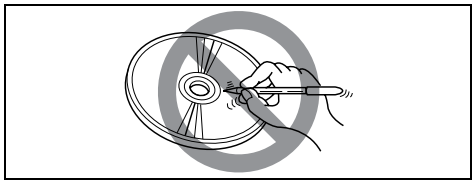

52D348

Never stick labels on the surface of the compact disc or mark the surface with a pencil or pen.

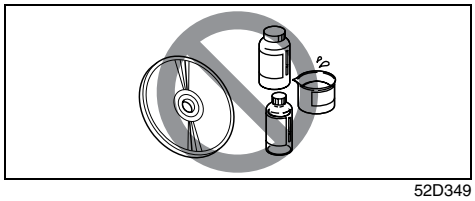

52D349

Do not use any solvents such as commercially available cleaners, anti-static spray, or thinner to clean compact discs.

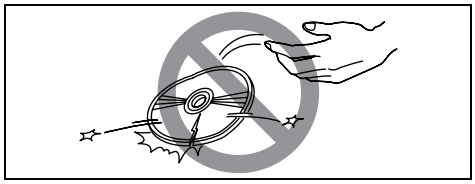

52D350

Do not use compact discs that have large scratches, are misshaped, or cracked, etc. Use of such discs will cause damage or prevent the system from operating properly.

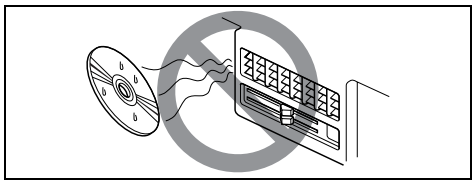

52D351

Do not expose compact discs to direct sunlight or any heat source.

NOTE:

- *Do not use commercially available CD protection sheets or discs equipped with stabilizers, etc.*
  These may get caught in the internal mechanism and damage the disc.
- *CD-R discs may not be able to playback in this unit due to the recording conditions.*
- *CD-RW discs can not playback in this unit.*

Downloaded from www.Manualslib.com manuals search engine

INSTRUMENT PANEL

Basic Operations

Type 1 AM/FM/XM CD PLAYER WITH CD CHANGER CONTROL

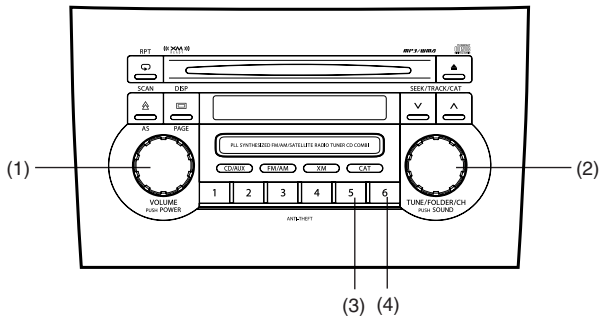

Type 2 AM/FM/XM 6-CD PLAYER WITH CD CHANGER CONTROL

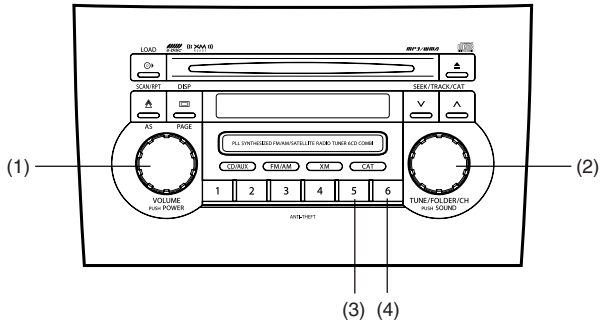

80J061

(1) Power on/off knob
Volume control knob
(2) Tone/balance/fader control knob
(3) Preset button 5
(4) Preset button 6

Downloaded from www.Manualslib.com manuals search engine

Audio Systems:

Turning power on/off
Press the power on/off knob (1).
The unit starts in the function mode it was in when the power was turned off last.

Adjusting the volume
Turn the volume control knob (1).
Turning it clockwise increases the volume; turning it counterclockwise decreases the volume.

NOTE:
While driving, adjust the volume to an extent that sound and/or noise coming from outside the car can be heard.

Adjusting bass/treble/balance/fader
1) Press the tone/balance/fader control knob (2).
   Each time it is pressed, sound adjustment is changed as follows:

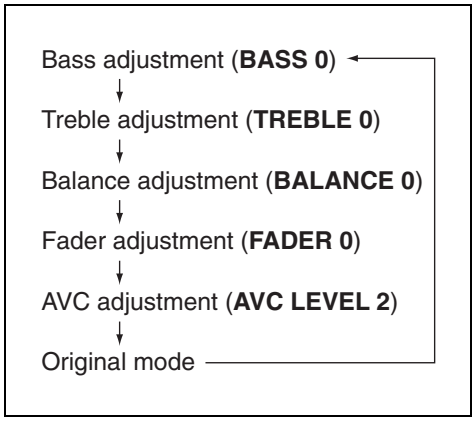

66J224

2) Turn the tone/balance/fader control knob (2) to adjust the sound.

Adjusting the AVC (Auto volume control)
The Automatic Volume Control (AVC) function automatically adjusts (increases/decreases) the sound volume in accordance with vehicle speed. The AVC control is provided with three selectable levels (LEVEL OFF, 1, 2, 3). The range of volume adjustment increases together with the LEVEL number,
1) Press the tone/balance/fader control knob (2) until the AVC adjustment mode is selected.
2) Turn the tone/balance/fader control knob (2) to select the desired AVC adjustment level. (Initial setting: LEVEL 2)

Adjusting the contrast of the display
1) Press the tone/balance/fader/control knob (2) and preset button 5 (3), preset button 6 (4) simultaneously.
2) To adjust the contrast of the display, turn the power on/off knob (1).

Cancel the dimmer condition
Each time you press the power on/off knob (1) for two seconds with the lighting switch on, the background brightness of the audio display will switch between normal and dimmed.

Downloaded from www.Manualslib.com manuals search engine

INSTRUMENT PANEL

Listening to the Radio

Type 1 AM/FM/XM CD PLAYER WITH CD CHANGER CONTROL

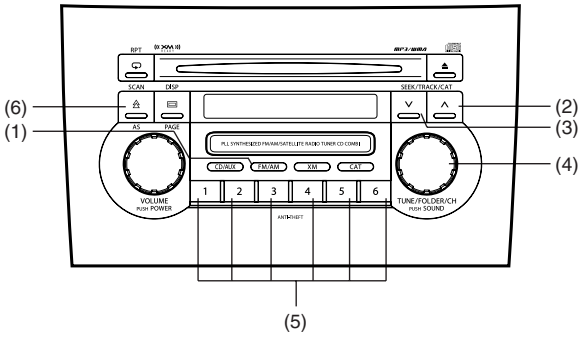

Type 2 AM/FM/XM 6-CD PLAYER WITH CD CHANGER CONTROL

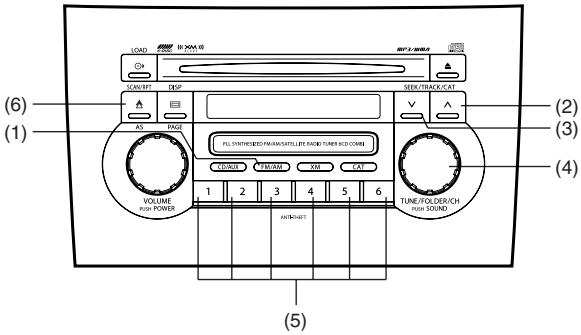

80J062

Display

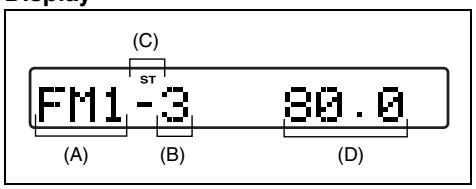

66J097

(1) Band switch button (FM/AM)
(2) Seek up button
(3) Seek down button
(4) Manual tuning knob
(5) Preset buttons (1 to 6)
(6) Auto store button (AS)/
Scan button (SCAN)

(A) Band
(B) Preset channel number
(C) Stereo indicator
(D) Frequency

Downloaded from www.Manualslib.com manuals search engine

Selecting the reception band
Press the band switch button (1).
Each time the button is pressed, the reception band is switched as follows:

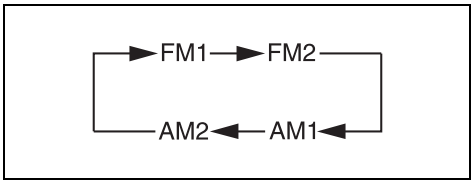

66J098

Seek tuning
Press the seek up button (2) or the seek down button (3).
The unit stops searching for a station at a frequency where a broadcast station is available.

Manual tuning
Turn the manual tuning knob (4).
The frequency being received is displayed.

Preset memory
1) Select the desired station.
2) Select the preset button (5) to which you want to store the station and press and hold the button for 2 seconds or longer.

Auto store
Press and hold the auto store button (6) for 2 seconds or longer.
Six stations in total are automatically stored to the preset buttons (5) in sequential order, starting from the lower frequencies.

NOTE:
- *When the auto store is performed, the station previously stored in the memory at the position is overwritten.*
- *When there are fewer than 6 stations that can be stored even if 2 rounds of auto store operation are performed, the stations previously stored at the remaining preset buttons (5) are not overwritten.*

Scan tuning
1) Press the scan button (6).
   Stations are automatically sought for in a sequential order, starting from a station being currently received, and scan stops for 5 seconds at a frequency where there is a station available.
2) Press the scan button (6) again to stop scanning at the frequency being currently received.

Receiving a stereo broadcast station
If a stereo broadcast station is received, the stereo indicator will light.

Radio Reception
Radio reception can be affected by environment, atmospheric conditions, or radio signal's power and distance from the station. Nearby mountains and buildings may interfere or deflect radio reception, causing poor reception. Poor reception or radio static can also be caused by electric current from overhead wires or high voltage power lines.

Radio Antenna

SX4

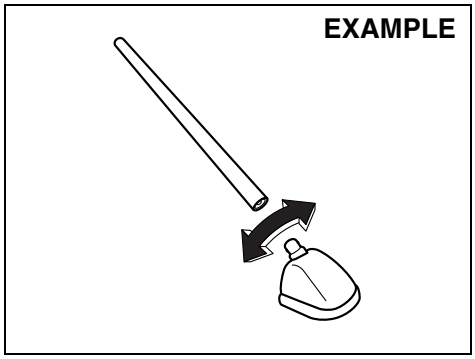

63J055

The radio antenna on the roof is removable. To remove the antenna, turn it counterclockwise. To reinstall the antenna, turn it clockwise firmly by hand.

Downloaded from www.Manualslib.com manuals search engine

CAUTION

To avoid damage to the radio antenna:
- **Remove the antenna before using an automatic car wash.**
- **Remove the antenna when it is possible for the antenna to hit something such as a low ceiling in a parking garage or putting a car cover over your car.**
- **Remove the antenna before putting a car cover over your vehicle.**

SX4 SEDAN

The radio antenna wire is printed inside the rear window.

CAUTION

- **Do not attach any metal objects to the rear window glass, or place metallic film near it. Either of these conditions may cause poor reception or noise.**
- **When cleaning the inside of the rear window, be careful not to scratch or damage the rear window antenna. Wipe the rear window lightly along the antenna with a dampened soft cloth.**

Listening to a CD

52D274

- CDs or CD-ROMs carrying no mark (A) cannot be used.
- Some discs previously recorded in CD-R\CD-RW format may not be used.

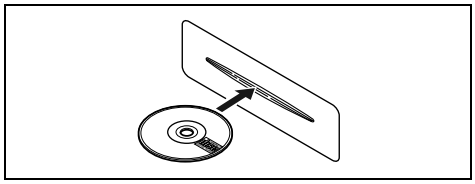

52D291

- A CD is inserted with its label facing upward.
- When there is a CD already loaded in the unit, another CD cannot be loaded at the same time. Do not use force when inserting the CD into the CD insertion slot.
- If a blank disc (non recorded CD-R) is loaded in the unit, the disc will be ejected.

CAUTION

- **Never insert your finger or hand into the CD insertion slot. Never insert foreign objects.**
- **Never insert a CD with glue coming out from adhesive tape or a rental CD label or with a trace indicating that adhesive tape or a rental CD label has been removed. This may cause the CD not to eject or result in a malfunction.**

Downloaded from www.Manualslib.com manuals search engine

Audio Systems:

Type 1
AM/FM/XM CD PLAYER WITH CD CHANGER CONTROL (Built in CD Player)

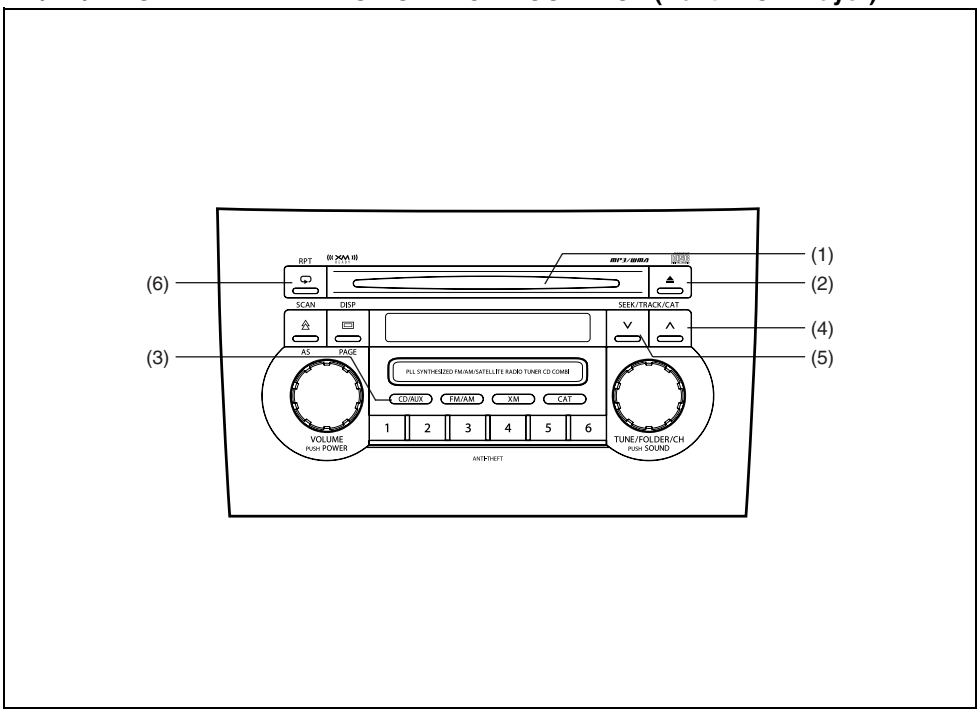

80J063

Display

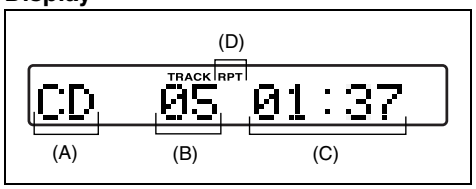

66J100

(1) CD insertion slot
(2) CD eject button
(3) Disc button (CD/AUX)
(4) Track up button/Fast forward button
(5) Track down button/Rewind button
(6) Repeat button (RPT)

(A) Mode indicator
(B) Track number
(C) Play time
(D) Repeat indicator

Downloaded from www.Manualslib.com manuals search engine

INSTRUMENT PANEL

NOTE:
About Single CDs (8 cm CDs)
- *No adapter is required to play a single CD.*
- *A single CD is inserted from the center of the CD insertion slot.*
- *Since an ejected single CD is not automatically reloaded, be sure to remove the ejected single CD.*

Loading a CD
Insert a CD in the CD insertion slot (1).
When a CD is loaded, play starts and the CD indicator (A) lights.

Ejecting a CD
Press the CD eject button (2).
If you left a CD ejected for a period of about 15 seconds, it will be automatically drawn inside the unit. (Auto reload function)

The backup eject function:
This function allows you to eject a CD with the power turned off by pressing the CD eject button (2).

CAUTION
If you forcefully try to push an ejected CD inside the unit before auto reloading, the disc surface might be scratched.

Listening to a CD
When a CD is inserted, it is automatically played back.
When a CD is already inside the unit, press the disc button (3) to play back the CD. When a CD is inside the unit, the CD indicator (A) is lit on the display unit.

Selecting a track
- Press the track up button (4) to listen to the next track.
- Press the track down button (5) twice to listen to the previous track.
  When the track down button (5) is pressed once, the track being currently played will return to the beginning.

Fast forwarding/Rewinding a track
- Hold in the fast forward button (4) to advance a track rapidly.
- Hold in the rewind button (5) to rewind a track.

Repeat play
Press the repeat button (6).
The repeat indicator (D) lights and the track currently being played is played repeatedly.
Press the repeat button (6) again to cancel repeat play.

Downloaded from www.Manualslib.com manuals search engine

Audio Systems:

Type 2
AM/FM/XM 6-CD PLAYER WITH CD CHANGER CONTROL (Built-in CD Changer)

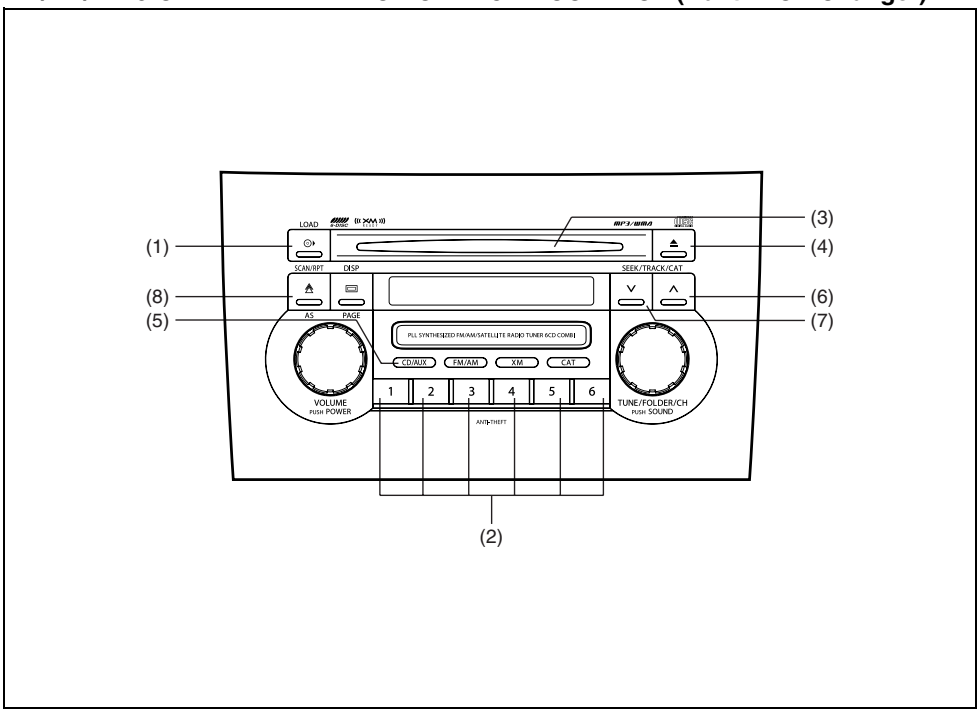

66J064

Display

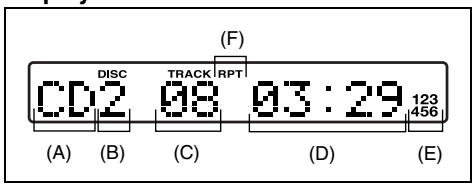

66J102

(1) Load button (LOAD)
(2) Disc select buttons (1 to 6)
(3) CD insertion slot
(4) CD eject button
(5) Disc button (CD/AUX)
(6) Track up button/Fast forward button
(7) Track down button/Rewind button
(8) Repeat button (RPT)

(A) Mode indicator
(B) Disc number
(C) Track number
(D) Play time
(E) CD indicator
(F) Repeat indicator

Downloaded from www.Manualslib.com manuals search engine

INSTRUMENT PANEL

NOTE:
About Single CDs (8 cm CDs)
- *Since the unit is not compatible with a single CD, do not load it into the unit.*
- *Keep in mind the fact that a single CD cannot be played even using a single CD adaptor for the unit.*
- *When a single CD is loaded into the unit accidentally, it will be ejected immediately. Please be sure to remove it.*
  If you forcefully try to push it into the unit without removing it, the CD cannot be ejected. This will result in a damage to the mechanism. Please never do this.

Loading one CD

1) Press the load button (1), then press one of the disc select buttons (2) that corresponds to the slot into which you want to load a CD.

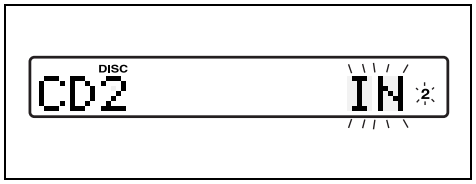

66J143

Both the indication “In” and the selected disc number in the CD indicator will blink for about 15 seconds.

2) Load the CD into the CD insertion slot (3). When the CD is loaded, play starts. The disk number in the CD indicator will light.

CAUTION

You can load a CD only while the indication “In” is blinking for about 15 seconds. During that period, the shutter located in the depth of the CD insertion slot (3) is opened. After 15 seconds time has elapsed, the indication “In” disappears from the display and the shutter closes, making it impossible to load a CD. If you try to load the CD with the shutter closed, the CD may damage the shutter. Never do this.

Loading multiple CDs

1) Press the load button (1) for 2 seconds or longer.
   The indication “CD ALL” appears in the display, and then the indication “In” and a disc number in the CD indicator will blink for about 15 seconds.
2) Load a CD into the CD insertion slot (3).
3) The indication “In” and the next disc number will blink in the display. Load the next CD.
4) After loading the required number of CD’s, press any disc select button (2) to select the desired CD to listen to. If no select button is pressed, play will start from the first loaded CD.

Only the numbers in the CD indicator that correspond to the loaded slots will light.

Ejecting one CD

1) Select the CD you want to remove with the disc select buttons (2).
2) Press the CD eject button (4).
   If you leave the ejected CD without removing it, it will be drawn into the unit automatically after about 15 seconds. (Auto reload function)

The buck up eject mechanism:
This function allows you to eject the CD loaded in the unit with the unit turned off only by pressing the CD eject button (4).

Downloaded from www.Manualslib.com manuals search engine

Ejecting all the CDs
Press the CD eject button (4) for 2 seconds or longer. All the CDs will be ejected from the unit in a sequential manner.
- Please prepare a location where removed CDs can be stored.
- If you leave the ejected CD without removing it, it will be drawn into the unit automatically after about 15 seconds. (Auto reload function)

The buck up eject mechanism:
This function allows you to eject the CD loaded in the unit with the unit turned off only by pressing the CD eject button (4).

CAUTION
If you try to push an ejected CD inside the unit forcibly before auto reloading, the disc surface might be scratched.

Listening to a CD
1) When a CD is inserted, it is automatically played back.
   When a CD is already inside the unit, press the disc button (5) to play back the CD. When a CD is inside the unit, the CD indicator (A) is lit on the display unit.
2) If you want to play another CD, select it with the disc select buttons (2).
   Play starts from the point on the disc that the unit played last (Last position memory).

Selecting a track
- Press the track up button (6) to listen to the next track.
- Press the track down button (7) twice to listen to the previous track.
  When the track down button (7) is pressed once, the track being currently played will return to the beginning.

Fast forwarding/Rewinding a track
- Hold in the fast forward button (6) to advance a track rapidly.
- Hold in the rewind button (7) to rewind a track.

Repeat play
Press the repeat button (8).
Each time the button is pressed, repeat play mode changes as follows:

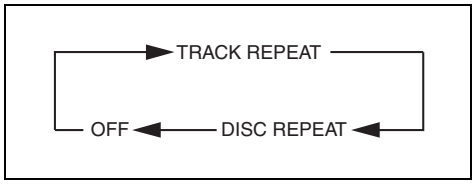

66J144

NOTE:
This operation should be performed within 2 seconds.

To cancel repeat play, press the repeat button (8) several times to change the repeat play mode to OFF.

- TRACK REPEAT
  The indication “TRACK RPT” appears in the display for 2 seconds and then the repeat indicator (F) lights.
  The track currently being played is played repeatedly.
- DISC REPEAT
  The indication “DISC RPT” appears in the display for 2 seconds and then the repeat indicator (F) lights.
  When all the tracks on the disc currently being played finish playing, play starts again at the beginning of the disc.

Downloaded from www.Manualslib.com manuals search engine

Audio Systems:

INSTRUMENT PANEL

Listening to an MP3/WMA Disc

Type 1 AM/FM/XM CD PLAYER WITH CD CHANGER CONTROL

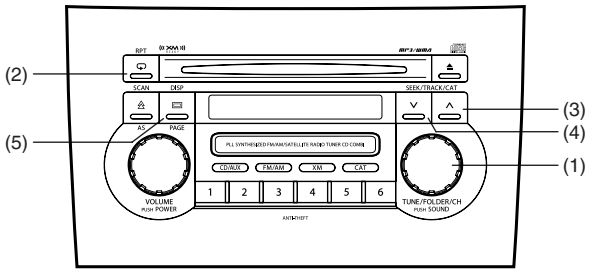

Type 2 AM/FM/XM 6-CD PLAYER WITH CD CHANGER CONTROL

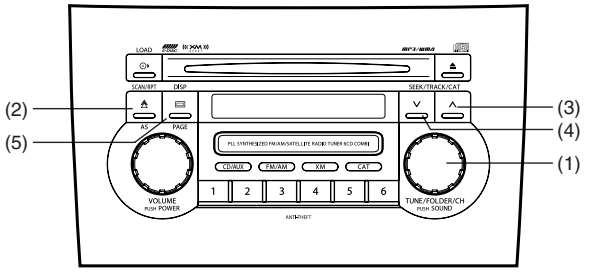

80J065

Display (Type 1)

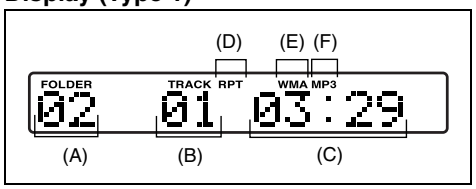

66J104

Display (Type 2)

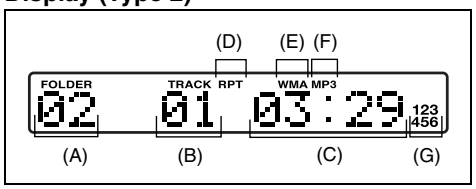

66J105

(1) Sound control knob
(2) Repeat button (RPT)
(3) Track up button/Fast forward button
(4) Track down button/Rewind button
(5) Display button (DISP)

(A) Folder number
(B) Track number
(C) Play time
(D) Repeat indicator
(E) WMA indicator
(F) MP3 indicator
(G) CD indicator

Downloaded from www.Manualslib.com manuals search engine

MP3/WMA MODE

Selecting a folder

Turn the sound control knob (1) to select a folder.

Repeat play

Press the repeat button (2).
Each time the button is pressed, repeat play mode changes as follows:

Type 1

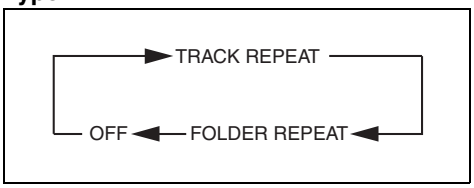

66J128

Type 2

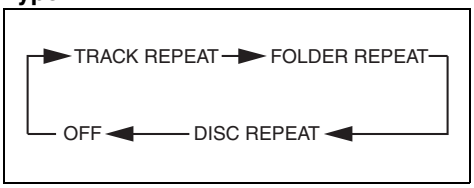

66J145

NOTE:
This operation should be performed within 2 seconds.

To cancel repeat play, press the repeat button (2) several times to change the repeat play mode to OFF.

- TRACK REPEAT
  The indication “TRACK RPT” appears in the display for 2 seconds and then the repeat indicator (D) lights.
  The track currently being played is played repeatedly.
- FOLDER REPEAT
  The indication “FOLDER RPT” appears in the display for 2 seconds and then the repeat indicator (D) lights.
  All the tracks in the folder currently being played are played repeatedly.
- DISC REPEAT
  The indication “DISC RPT” appears in the display for 2 seconds and then the repeat indicator (D) lights.
  When all the tracks on the disc currently being played finish playing, play starts again at the beginning of the disc.

Selecting a track

- Press the track up button (3) to listen to the next track.
- Press the track down button (4) twice to listen to the previous track.
  When the track down button (4) is pressed once, the track currently being played will start again at the beginning.

Fast forwarding/Rewinding a track

- Hold in the fast forward button (3) to advance a track rapidly.
- Hold in the rewind button (4) to rewind a track.

Displaying CD titles

Press the display button (5).
Each time the button is pressed, the title changes as follows:

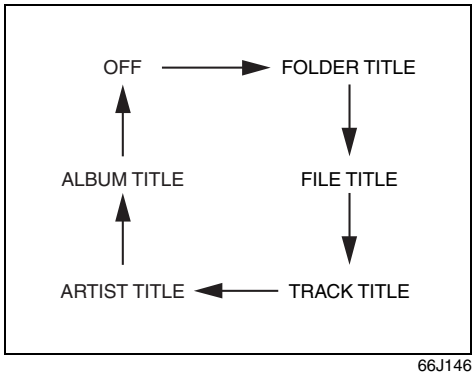

66J146

Forwarding a title

If there is a title with 12 letters or more, each press will show next letters in the display. (No scrolling is made.)
Press and hold the display button (5) for 2 seconds or longer. A title is changed.

Downloaded from www.Manualslib.com manuals search engine

INSTRUMENT PANEL

Listening to a XM Satellite Radio (Option)

Type 1 AM/FM/XM CD PLAYER WITH CD CHANGER CONTROL

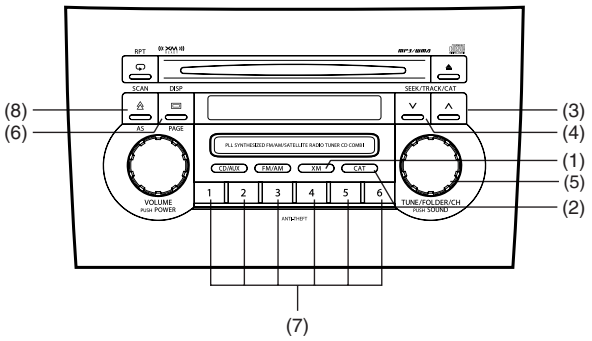

Type 2 AM/FM/XM 6-CD PLAYER WITH CD CHANGER CONTROL

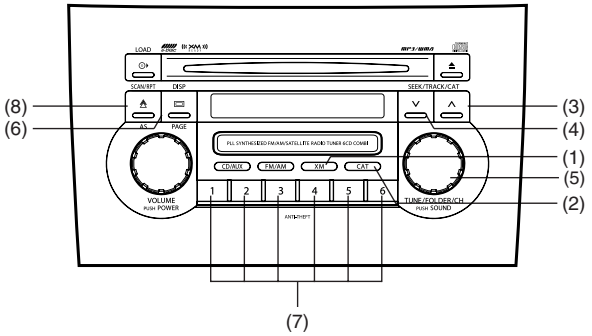

80J066

Display

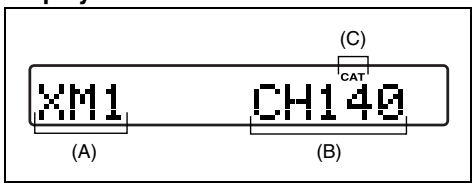

66J107

(1) XM button
(2) Category button (CAT)
(3) Seek up button
(4) Seek down button
(5) Manual tuning knob
(6) Display button (DISP)
(7) Preset button (1 to 6)
(8) Scan button (SCAN)

(A) Band
(B) Channel number
(C) Category indicator

If you want to purchase XM Satellite Radio Service, contact your SUZUKI dealer.
It is necessary to buy a special tuner to receive XM broadcasting.

Your vehicle is capable of receiving XM Satellite Radio anywhere in the United States except Hawaii, Alaska, and Canada.

Downloaded from www.Manualslib.com manuals search engine

XM MODE

Selecting a band

Press the XM button (1).
Each time the button is pressed, the band changes in the following order.

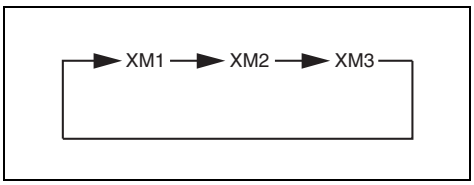

66J129

Selecting a category

Press the seek up button (3) or the seek down button (4). The category is changed.

Turning the category function on/off

Press and hold the category button (2) for 2 seconds or longer, and "CATEGORY ON" appears on the display, the CAT indicator (c) lights up and the CATEGORY function is activated.
Press and hold the category button (2) for 2 seconds or longer again, and "CATEGORY OFF" appears on the display and the CAT indicator turns off, indicating that the CATEGORY function has been turned off.

NOTE:
The first time you use the radio, turn the category function on.

Selecting a category

Press the seek up button (3) or seek down button (4) to select a category.

Displaying the category

Press the category button (2) to have the currently selected category appear on the display.

Selecting a channel

Turn the manual tuning knob (5) to select a channel.

NOTE:
When the category function is on, only those channels included in the selected category can be selected.

Selecting the item to be displayed

Press the display button (6).
Each time the button is pressed, the item on display changes in the following order.

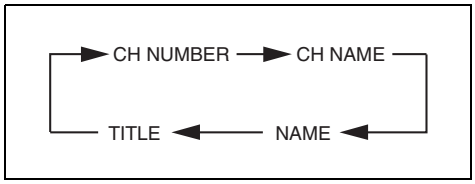

66J130

Preset memory

1) Select the desired station.
2) Select the preset button (7) to which you want to store the station and press and hold the button for 2 seconds or longer.

Scan tuning

1) Press the scan button (8).
   Stations are automatically searched for in a sequential order, starting from the station being currently received, and scan tuning stops for 5 seconds at the frequency where there is a station available.
2) Press the scan button (8) again to stop scanning at the frequency currently being received.

Satellite Radio Reception

Satellite radio receives signals from two satellites in orbit over the equator. Therefore, satellite radio reception can be interrupted when there are objects south of your vehicle. To help compensate for this, ground-based repeaters are placed in major metropolitan areas, but depending on the geographic situation (for example, if mountains or buildings are on the south side of your vehicle), you may experience reception problems.

Downloaded from www.Manualslib.com manuals search engine

Listening to Audio for AUX (Option)

Type 1 AM/FM/XM CD PLAYER WITH CD CHANGER CONTROL

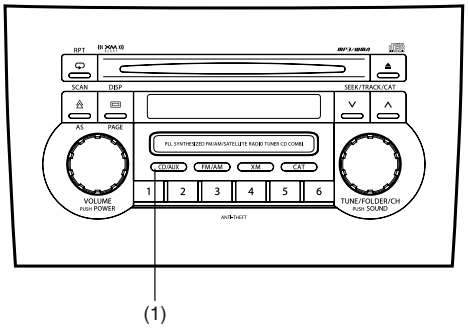

Type 2 AM/FM/XM 6-CD PLAYER WITH CD CHANGER CONTROL

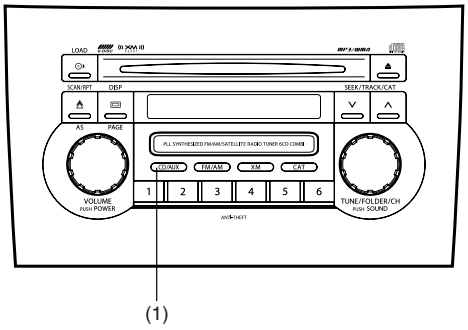

80J067

Display

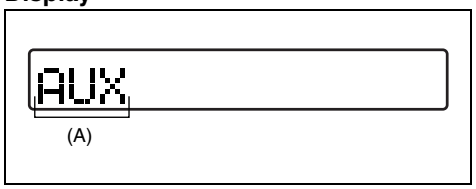

66J221

(1) Aux button (CD/AUX)
(A) Mode indicator

Aux function

This system has an external input terminal so you can listen to audio from an external device connected to this unit.

Press the aux button (1).
Each time the button is pressed, the selected mode is switched as follows:

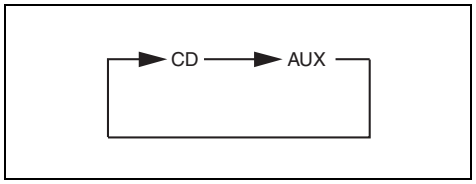

66J123

Downloaded from www.Manualslib.com manuals search engine

Listening to a CD from an External CD Changer (Option)

Type 1 AM/FM/XM CD PLAYER WITH CD CHANGER CONTROL

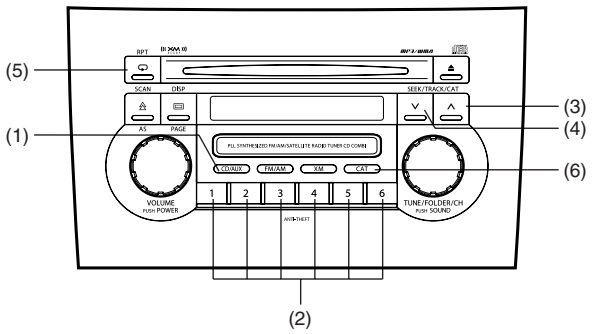

Type 2 AM/FM/XM 6-CD PLAYER WITH CD CHANGER CONTROL

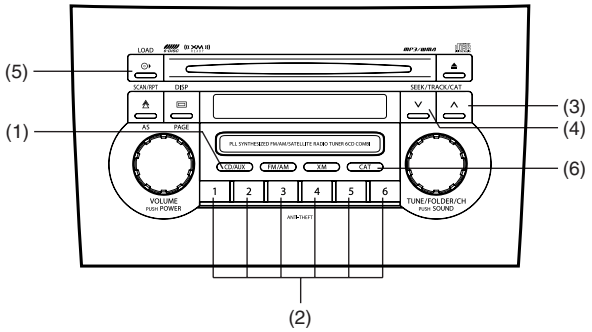

80J068

Display

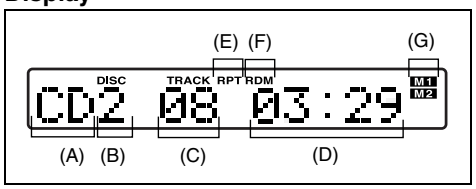

66J113

(1) Disc button (CD/AUX)
(2) Disc select buttons (1 to 6)
(3) Track up button/Fast forward button
(4) Track down button/Rewind button
(5) Repeat button (RPT)
(6) Category button (CAT)

(A) Mode indicator
(B) Disc number
(C) Track number
(D) Play time
(E) Repeat indicator
(F) Random indicator
(G) CD changer number

Downloaded from www.Manualslib.com manuals search engine

Selecting a CD changer mode
Press the disc button (1).
Each time the button is pressed, the selected CD plays as follows:

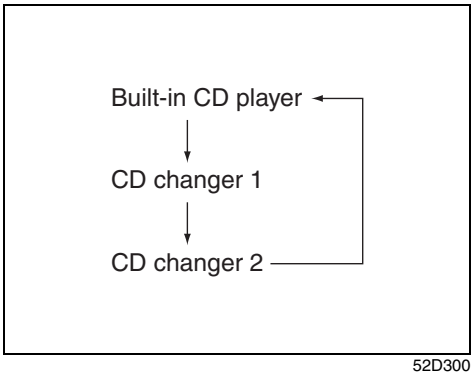

52D300

- When only one CD changer is connected to this unit, CD changer 2 is skipped.
- When no CD is loaded in the built-in CD player, the built-in CD player is skipped.

Selecting a disc
Press the disc select button (2) corresponding to the disc number you want to listen to.
Play starts from the first track on the disc. If a disc number having no disc is pressed, the selection will be invalid.

Selecting a track
- Press the track up button (3) to listen to the next track.
- Press the track down button (4) twice to listen to the previous track.
  When the track down button (4) is pressed once, the track currently being played will start again at the beginning.

Fast forwarding/Rewinding a track
- Hold in the fast forward button (3) to advance a track rapidly.
- Hold in the rewind button (4) to rewind a track.

Random play
Press the category button (6).
Each time the button is pressed, the mode changes in the following order.

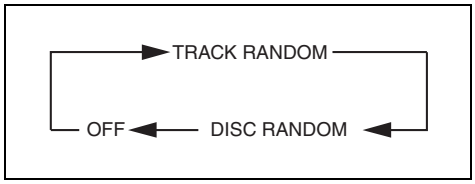

66J131

NOTE:
This operation should be performed within 2 seconds.

To cancel random play, press the category button (6) several times to change the random play mode to OFF.

- TRACK RANDOM
  The tracks in the disc that is loaded are played at random.
- DISC RANDOM
  The tracks in all discs are played at random.

NOTE:
The random play can be operated with the External CD Changer (Option) only.

Downloaded from www.Manualslib.com manuals search engine

Repeat play
Press the repeat button (5).
Each time the button is pressed, repeat play mode changes as follows:

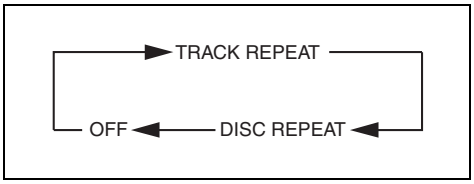

66J144

NOTE:
This operation should be performed within 2 seconds.

To cancel repeat play, press the repeat button (5) several times to change the repeat play mode to OFF.

- TRACK REPEAT
  The indication “TRACK RPT” appears in the display for 2 seconds and then the repeat indicator (E) lights.
  The track being currently played is played repeatedly.

- DISC REPEAT
  The indication “DISC RPT” appears in the display for 2 seconds and then the repeat indicator (E) lights.
  When all the tracks on a disc being currently played finish playing, play starts again at the beginning of the disc.

Downloaded from www.Manualslib.com manuals search engine

Remote Audio Controls (if equipped)

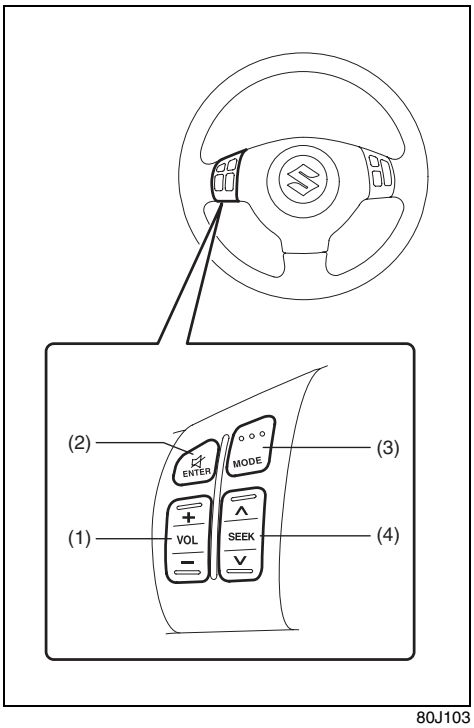

80J103

You can control basic functions of the audio system with the switches on the steering wheel.

To control the volume:
- To increase the volume, push the upper part of the switch (1). The volume continues to increase until you release the switch.
- To decrease the volume, push the lower part of the switch (1). The volume continues to decrease until you release the switch.
- To mute, push the switch (2).

To select the mode (AM1, AM2, FM1, FM2, XM (option), CD, External CD-changer (option), AUX (option)), push the switch (3).

You can also turn on the audio system by pushing the switch (3).

To change the radio station:
- To advance to the next preset station, push the upper part of the switch (4) briefly.
- To select the previous preset station, push the lower part of the switch (4) briefly.
- To scan to a higher frequency radio station, push and hold the upper part of the switch (4).
- To scan to a lower frequency radio station, push and hold the lower part of the switch (4).

To change the selection on a CD:
- To advance to the next track on a CD, push the upper part of the switch (4) briefly.
- To select the previous track on a CD, push the lower part of the switch (4).

Downloaded from www.Manualslib.com manuals search engine

Anti-Theft Feature

Type 1 AM/FM/XM CD PLAYER WITH CD CHANGER CONTROL

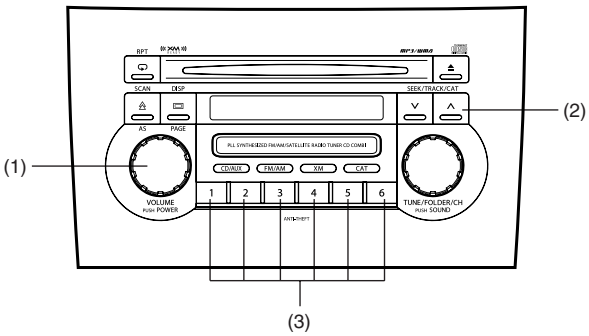

Type 2 AM/FM/XM 6-CD PLAYER WITH CD CHANGER CONTROL

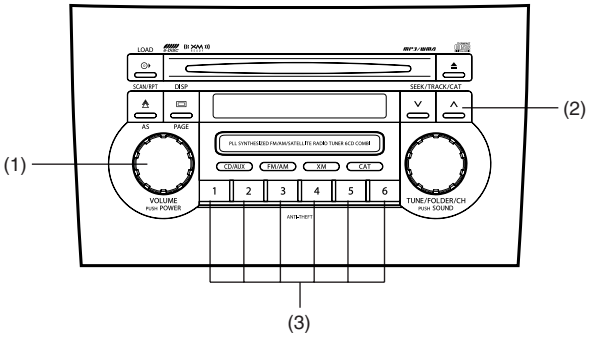

80J069

(1) Power on/off knob
(2) Track up button/Fast forward button
(3) Preset buttons (1 to 6)

The anti-theft feature is intended to discourage theft or the audio system by preventing the system from operating when it is moved to a different vehicle.
This feature works by allowing you to enter a Personal Identification Number (PIN). When the audio system is disconnected from its power source, such as when the audio system is removed or the battery is disconnected, the system will not operate again unless the PIN is reentered.

Downloaded from www.Manualslib.com manuals search engine

Setting the Anti-Theft Function

1) Turn off the power by pressing the power on/off knob (1).

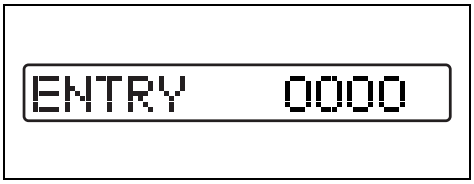

66J118

2) Press the power on/off knob (1) while pressing and holding the track up button (2). The “ENTRY 0000” will blink and the audio system enter PIN-input mode.

NOTE:
Establish your PIN by combining numbers from 1 to 6 into any 4-digit number. If you forget your PIN, when you remove the battery for repair etc., you will no longer be able to operate the audio system.

EXAMPLE

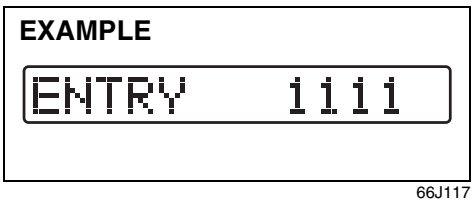

66J117

3) Input the four digit PIN using preset buttons 1 to 6.

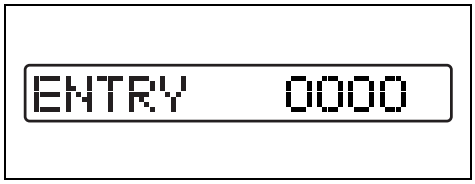

66J118

4) After you enter your four digit PIN, the display will return to “0000”.

EXAMPLE

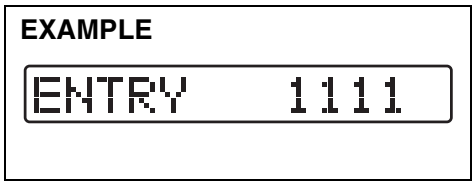

66J117

5) Input the same 4-digit number you previously entered.

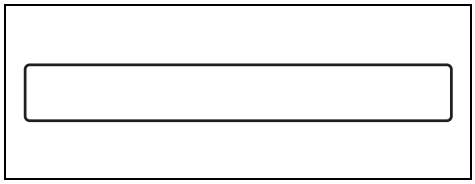

66J120

6) The power of the audio system will turn off.

NOTE:
Write down your PIN for the future use.

Canceling Your Established PIN Setting

This operation is to be done when you want to cancel the anti-theft function or change your PIN.

1) Turn off the power by pressing the power on/off knob (1).

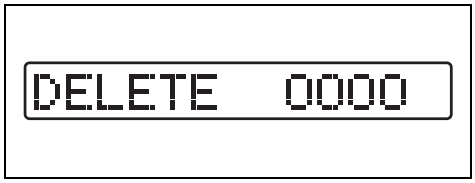

66J121

2) Press the power on/off knob (1) while pressing and holding the track up button (2). The “DELETE 0000” will blink and the audio system will enter the cancel mode.

Downloaded from www.Manualslib.com manuals search engine

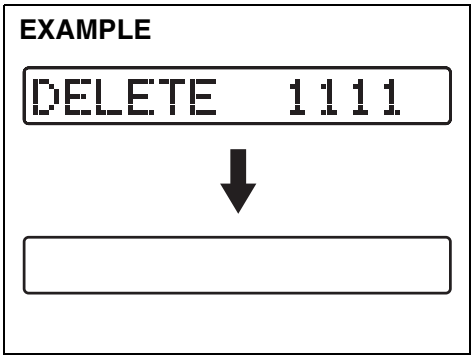

66J124

3) Input your PIN. The power of the audio system will turn off and your PIN will be deleted.
   To change your PIN, first delete your current PIN, then set a new one.

Confirming Your Personal Identification Number (PIN)

When the main power source is disconnected such as when you exchange your battery, etc, you will have to confirm your PIN to be able to use the audio system.

To confirm your PIN:

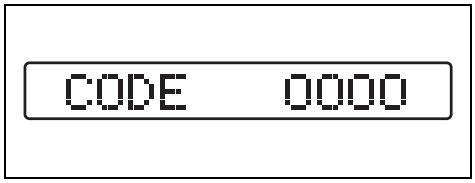

66J122

1) Turn the ignition switch to the “ACC” position.

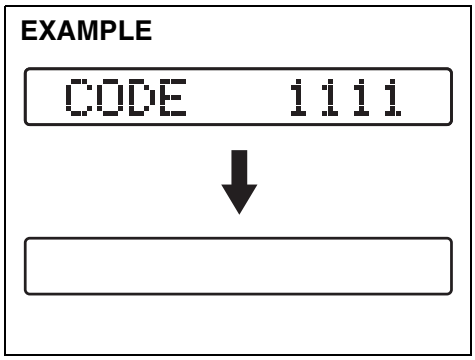

66J125

2) Input your PIN.
   If the PIN that you input matches the registered PIN, the power of the audio system will turn off, and you will be able to operate the audio system.

NOTE:

- *If you input your PIN incorrectly, “----” will be displayed and the anti-theft function lock mode is entered. If you enter an incorrect PIN fewer than 6 times, the locking time will be for 15 seconds; if you enter an incorrect PIN more than 6 times, the locking time will be for 15 minutes.*
- *If you forget your PIN and enter a wrong PIN, you can not perform any further operation.*

Downloaded from www.Manualslib.com manuals search engine

Troubleshooting

Applicable to every device

Phenomenon	Cause	Remedy
Power is not turned on. (No sound is produced)	Fuse is blown.	Contact your authorized SUZUKI dealer.
	Connections are not properly made.	Contact your authorized SUZUKI dealer.

Radio

Phenomenon	Cause	Remedy
Too much noise.	Not tuned correctly to the frequency of a station.	Tune correctly to the station frequency.
Stations cannot be selected by seek tuning.	There is no station with strong radio waves.	Select stations by manual tuning.

CD

Phenomenon	Cause	Remedy
Compact disc cannot be loaded.	Another compact disc is already loaded.	Eject the compact disc before loading a new one.
Sound skips or is noisy.	Compact disc is dirty.	Clean the compact disc with a soft cloth.
	Compact disc is heavily scratched or warped.	Replace with a compact disc with no scratches.
Sound is bad directly after power is turned on.	Water droplets may form on the internal lens when the car is parked in a humid place.	Let dry for about 1 hour with the power on.

Downloaded from www.Manualslib.com manuals search engine

Error display
This unit has a number of self-diagnostic functions to protect the system.
If a problem should occur, the display shows the type of error. Refer to the table below and take proper measures to correct the problem.
If the problem is corrected, the unit will operate normally.

Error display	Measures to be taken
PUSH EJECT	CD/CD changer "**Mechanical error**". This error display indicates a mechanical failure in the CD changer (failure to change or eject a disc). The mechanism is probably damaged. Contact your authorized SUZUKI dealer.
CHECK DISC	CD/CD changer "**Focus error**". The pick-up-focus is not properly functioning during playback due to damage on the disc or for other reasons. Check disc for damage.
	CD/CD changer "**Disc error**". The CD is inserted upside down or only an eight-centimeter CD adapter is equipped. Check disc for correct loading.

If an error display not listed above appears, turn off the unit and contact your SUZUKI dealer.

Downloaded from www.Manualslib.com manuals search engine

MEMO

Downloaded from www.Manualslib.com manuals search engine

OTHER CONTROLS AND EQUIPMENT

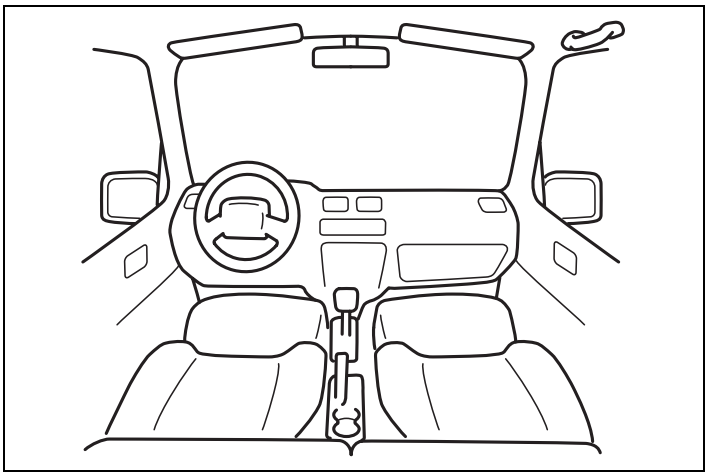

60G407

Parking Brake Lever 5-1
Pedals 5-1
Gearshift Lever 5-2
Fuel Filler Cap 5-3
Folding Rear Seats (SX4) 5-4
Sun Visor 5-8
Interior Light Switch 5-8
Spot Light 5-9
Assist Grips (if equipped) 5-9
Eyeglasses Holder (if equipped) 5-10
Engine Hood 5-10
Cup Holder and Storage Area (if equipped) 5-11
Accessory Socket (if equipped) 5-11
Frame Hooks 5-12
Tire Changing Tool 5-13
Luggage Compartment Cover (if equipped) 5-14
Luggage Compartment Light (SX4) 5-15
Trunk Light (SX4 SEDAN) 5-15
Radio Antenna 5-16
Roof Rails or Roof Rack Anchors (if equipped) 5-16

Downloaded from www.Manualslib.com manuals search engine

Parking Brake Lever: 6
Pedals: 6

OTHER CONTROLS AND EQUIPMENT

Parking Brake Lever

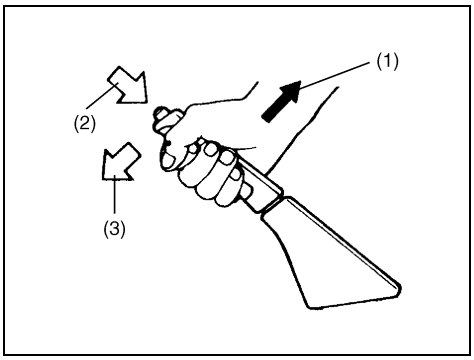

52D122

(1) To set
(2) To release
(3) To release

The parking brake lever is located between the seats. To set the parking brake, hold the brake pedal down and pull the parking brake lever all the way up. To release the parking brake, hold the brake pedal down, pull up slightly on the parking brake lever, push the button on the end of the lever with your thumb and lower the lever to its original position.

For automatic transaxle vehicles, always set the parking brake before moving the gearshift lever to the "P" (Park) position. If you park on an incline and shift into "P" before you set the parking brake, the weight of the vehicle may make it difficult to shift out of "P" when you are ready to drive the vehicle. When preparing to drive the vehicle, move the gearshift lever out of the "P" position before releasing the parking brake.

⚠ WARNING

- **Never drive your vehicle with the parking brake set: rear brake effectiveness can be reduced from overheating, brake life may be shortened or permanent brake damage may result.**
- **If the parking brake does not hold the vehicle securely or does not fully release, have your vehicle inspected immediately by an authorized SUZUKI dealer.**

⚠ WARNING

Always set the parking brake fully before leaving your vehicle or it may roll, causing injury or damage. When parking, make sure the gearshift lever for manual transaxle vehicles is in 1st gear or "R" (Reverse) and the gearshift lever for automatic transaxle vehicles is in "P" (Park). Remember, even though the transaxle is in gear or in Park, you must set the parking brake fully.

Pedals

Manual transaxle

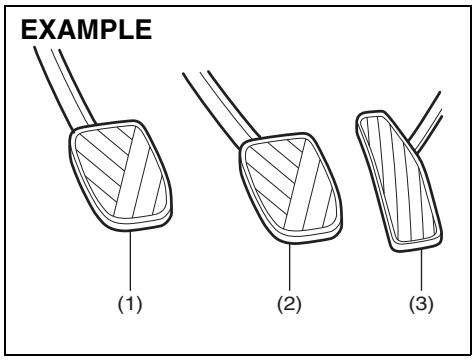

79J072

Automatic transaxle

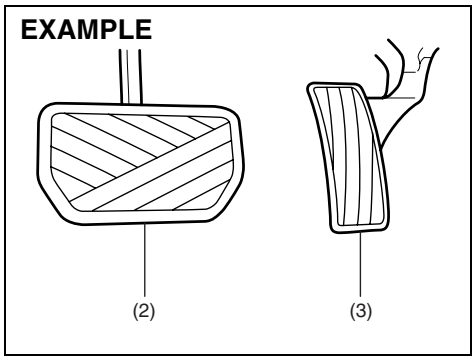

79J154

Downloaded from www.Manualslib.com manuals search engine

Pedals: 6
Gearshift Lever: 10

Clutch Pedal (1)

(For manual transaxle)
The clutch pedal is used to disengage the drive to the wheels when starting the engine, stopping or shifting the gearshift lever. Depressing the pedal disengages the clutch.

CAUTION

Do not drive with your foot resting on the clutch pedal. It could result in excessive clutch wear or clutch damage.

Brake Pedal (2)

Your SUZUKI vehicle is equipped with either front and rear disc brakes or front disc brakes and rear drum brakes. Depressing the brake pedal applies both sets of brakes.

You may hear occasional brake squeal when you apply the brakes. This is a normal condition caused by environmental factors such as cold, wet, snow, etc.

⚠ WARNING

If brake squeal is excessive and occurs each time the brakes are applied, you should have the brakes checked by your SUZUKI dealer.

⚠ WARNING

Do not "ride" the brakes by applying them continuously or resting your foot on the pedal. This will result in overheating of the brakes which could cause unpredictable braking action, longer stopping distances or permanent brake damage.

Accelerator Pedal (3)

This pedal controls the speed of the engine. Depressing the accelerator pedal increases power output and speed.

Gearshift Lever

Manual transaxle

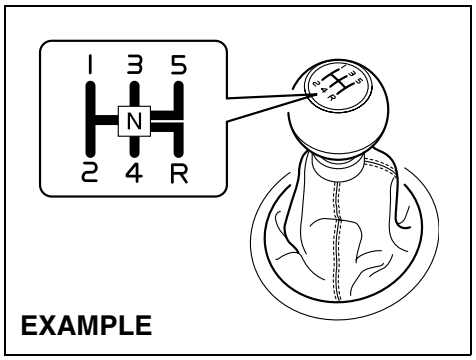

63J051

Automatic transaxle

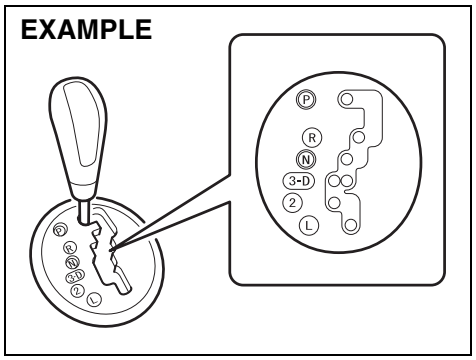

77J021

Downloaded from www.Manualslib.com manuals search engine

OTHER CONTROLS AND EQUIPMENT

Your vehicle is equipped with either a manual transaxle or automatic transaxle. The gearshift lever for each transaxle type is shown. For details on how to use the transaxle, refer to the “Using the Transaxle” in “OPERATING YOUR VEHICLE” section.

Fuel Filler Cap

SX4

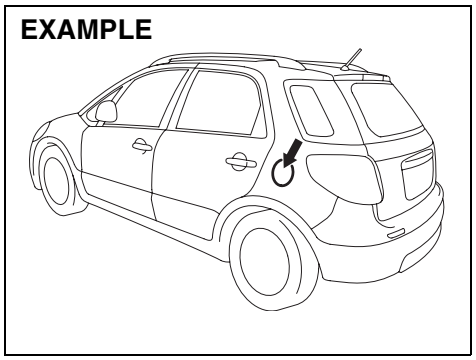

80JC060

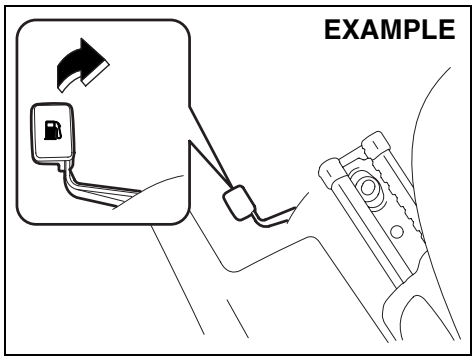

79J049

SX4 SEDAN

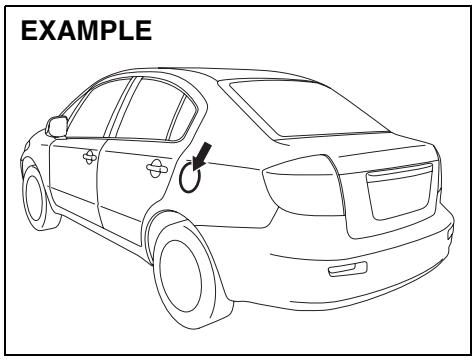

56KN029

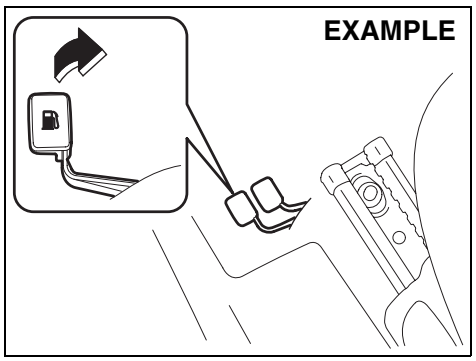

56KN030

Downloaded from www.Manualslib.com manuals search engine

Fuel Filler Cap: 5
Folding Rear Seats: 3

The fuel filler cap is located on the left rear side of the vehicle. The fuel filler door can be unlocked by pulling up the opener lever located on the outboard side of the driver's seat and can be locked by simply closing the door.

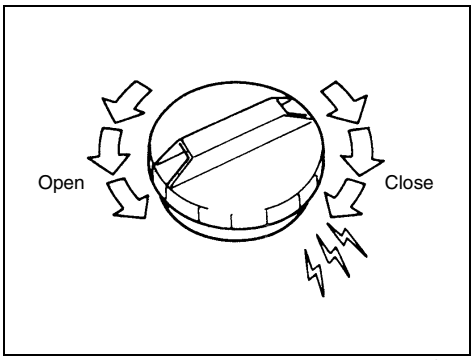

60G069

To remove the fuel filler cap:
1) Open the fuel filler door.
2) Remove the cap by turning it counter-clockwise.

⚠ WARNING

Remove the fuel filler cap slowly. The fuel may be under pressure and may spray out, causing injury.

To reinstall the fuel filler cap:
1) Turn the cap clockwise until you hear several clicks.
2) Close the fuel filler door.

⚠ WARNING

Gasoline is extremely flammable. Do not smoke when refueling, and make sure there are no open flames or sparks in the area.

⚠ WARNING

If you need to replace the fuel cap, use a genuine SUZUKI cap. Use of an improper cap can result in a malfunction of the fuel system or emission control system. It may also result in fuel leakage in the event of an accident.

Folding Rear Seats (SX4)

The rear seats of your vehicle can be folded forward to provide additional cargo space.

To fold the rear seats forward:

EXAMPLE

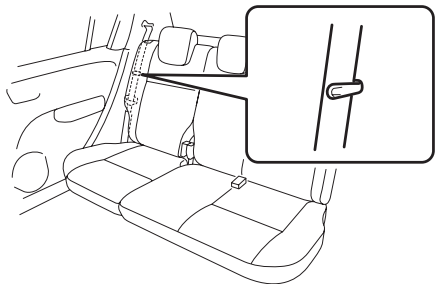

80J040

1) Hook the webbing of the outboard lap-shoulder belts in the belt hangers.

CAUTION

- **When you move a seatback, make sure the belt webbing is hooked in the seat belt hangers so the seat belts are not caught by the seat-back, seat hinge, or seat latch. This helps prevent damage to the belt system.**
- **Make sure the belt webbing is not twisted.**

Downloaded from www.Manualslib.com manuals search engine

OTHER CONTROLS AND EQUIPMENT

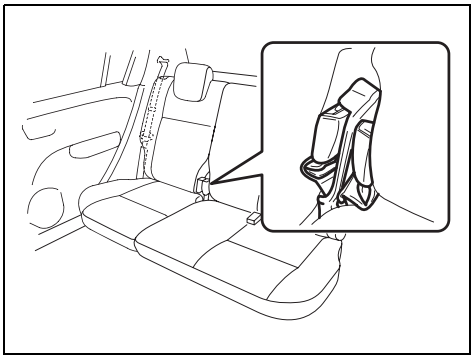

79J213

2) Stow the seat belt buckles of the center and right seating position as shown in the illustration.

CAUTION

When you fold the rear seatback forward, stow the seat belt buckles of the center and right seating position into the seat first. This helps prevent being caught by the seat and being damaged.

3) Lower the adjustable head restraint fully.

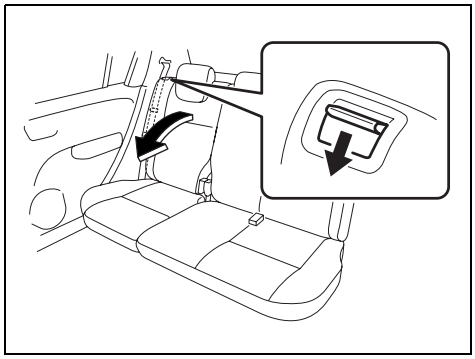

80J042

4) Pull the release lever on the top of each split seat, and fold the seatbacks forward.

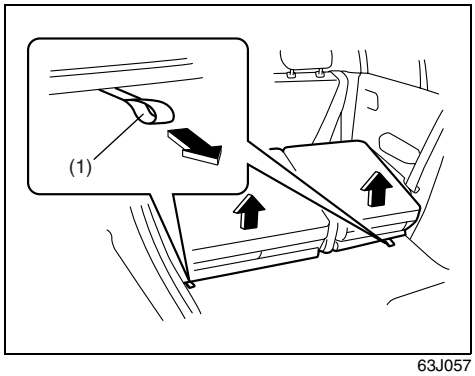

63J057

5) Pull the lock release strap (1) rearward to unlatch the seat cushion.

⚠ WARNING

When you unlatch the rear seat cushion, be careful that your face or hands are not injured from the seat popping up.

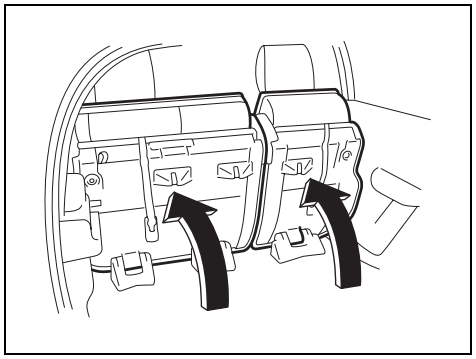

79J124

6) Fold the entire seat forward.

Downloaded from www.Manualslib.com manuals search engine

Folding Rear Seats: 3

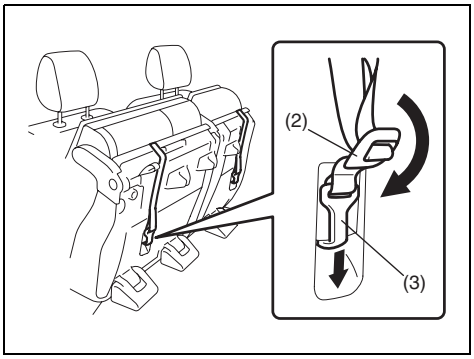

80J043

7) Push down the adjuster (2) to make the strap slack, and then unhook the strap by pushing down the hook (3).

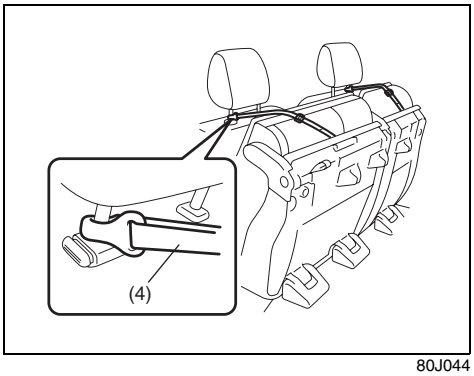

80J044

8) Hook the strap (4) to the front seat head restraint as shown in the illustration.

CAUTION

When securing the folded rear seat with a strap, adjust the strap length so that the rear seat will not move.

⚠ WARNING

Luggage or other cargo should be stowed in the luggage compartment with the rear seat in an upright position, whenever possible. If you need to carry cargo in the passenger compartment with the rear seat back folded forward, be sure to secure the cargo or it may be thrown about, causing injury. Never pile cargo higher than the seatbacks.

To return the seat to the normal position, follow the procedure below.

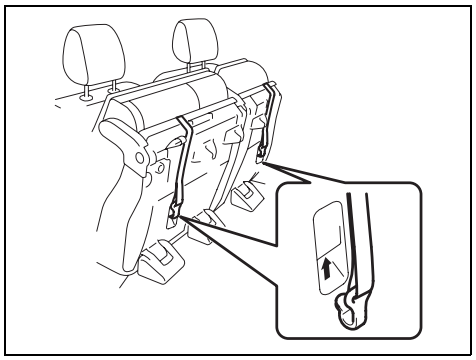

79J126

1) Unhook the strap from the head restraint and stow the strap to the back of the seat cushion as shown in the illustration. Make sure to adjust the strap length to avoid any slack or twist.

Downloaded from www.Manualslib.com manuals search engine

OTHER CONTROLS AND EQUIPMENT

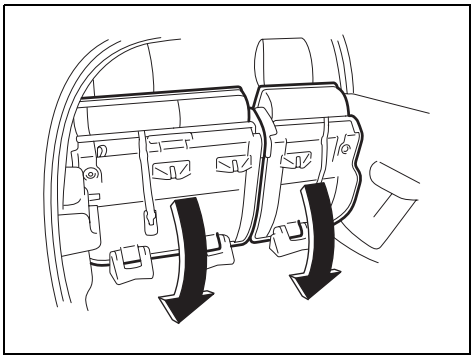

79J129

2) Pull down the seat cushion until it locks into place.

⚠ WARNING

When returning the rear seat cushion to the normal position, be careful that your finger is not caught between the lock and the floor.

CAUTION

- **When returning the rear seat cushion to the normal position, make sure that there is nothing around the striker. This prevents the seat cushion from being locked securely.**
- **When returning the rear seat cushion to the normal position, make sure that there is nothing under the seat cushion. This prevents damage to the seat cushion.**

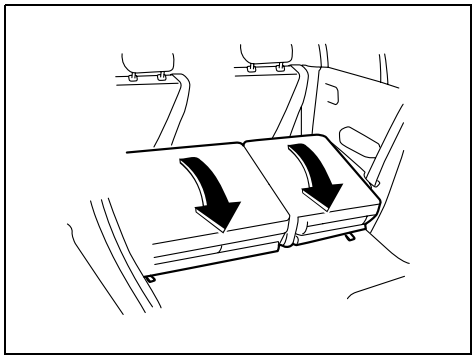

63J130

3) Raise the seatback until it locks into place.

Downloaded from www.Manualslib.com manuals search engine

After returning the seat, try moving the seat and seatback to make sure they are securely latched.

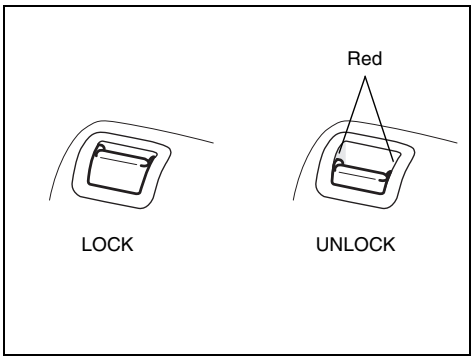

79J127

CAUTION

After securing the rear seatback, make sure that it is locked securely. If it is not, you will see red in the release lever.

Sun Visor

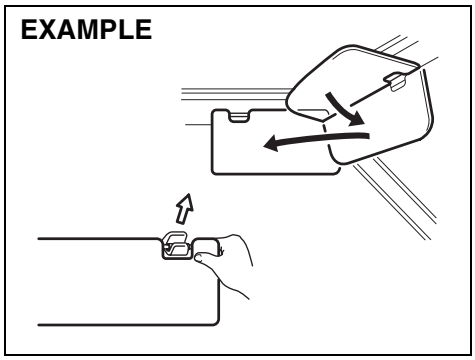

79J161

The sun visors can be pulled down to block glare coming through the windshield, or they can be unhooked and turned to the side to block glare coming through the side window.

CAUTION

When unhooking and hooking a sun visor, be sure to handle it by the hard plastic parts or the sun visor can be damaged.

Interior Light Switch

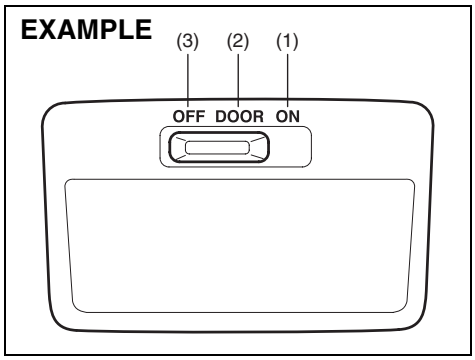

64J104

The interior light switch has three positions, which functions as described below.

(1) The light comes on and stays on regardless of whether the door is open or closed.
(2) The light comes on when the door is opened.
After closing all doors, the light will remain on for about 15 seconds and then fade out. If you insert the key into the ignition switch during that time, the light will start to fade out immediately.
After removing the key from the ignition switch, the light will turn on for about 15 seconds and then fade out.
(3) The light remains off even when the door is opened.

Downloaded from www.Manualslib.com manuals search engine

OTHER CONTROLS AND EQUIPMENT

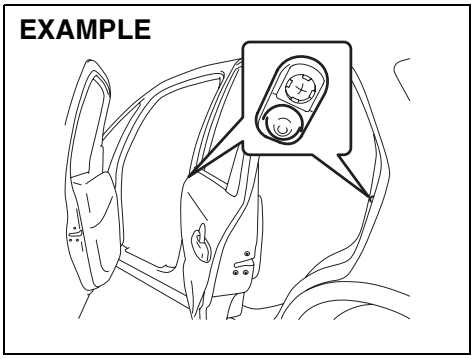

79J075

NOTE:
The number of doors involved in the lighting operation of the interior light depends on the vehicle specification. If there is a switch (rubber projection) at the door opening as shown, the door is involved in the lighting operation. The tailgate of SX4 is also involved in this operation even without the rubber projection.

Spot Light

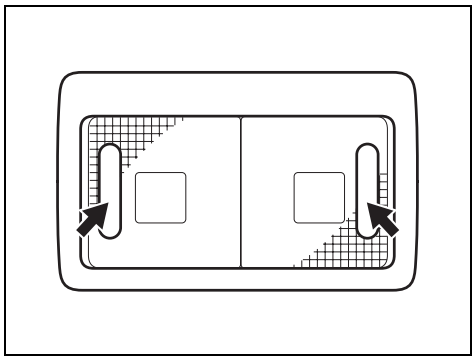

79J074

Push the switch to turn on the light and push it again to turn off the light.

Assist Grips (if equipped)

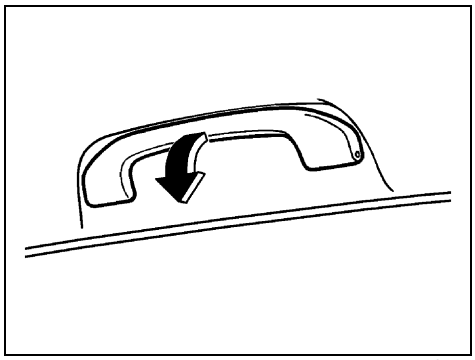

54G249

Assist grips are provided for convenience.

CAUTION

To avoid damaging the assist grip and the molded headlining, do not hang down the assist grip.

Downloaded from www.Manualslib.com manuals search engine

Sun Visor: 5
Interior Light Switch: 7

Eyeglasses Holder (if equipped)

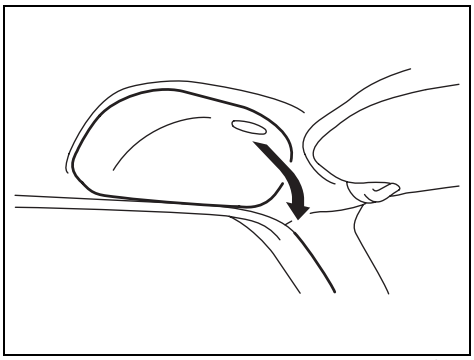

86G067

To use the eyeglasses holder, open the cover. Do not put heavy or sharp items in the box.

CAUTION

If you park your vehicle outdoors in direct sunlight or in hot weather, the eyeglasses holder can get very hot since it is close to the roof. So, when parking in such conditions:

- **Do not leave eyeglasses in the holder. The heat may distort plastic lenses or frames.**
- **Do not place flammable items, such as a lighter, in the holder. The heat may cause a fire.**

Engine Hood

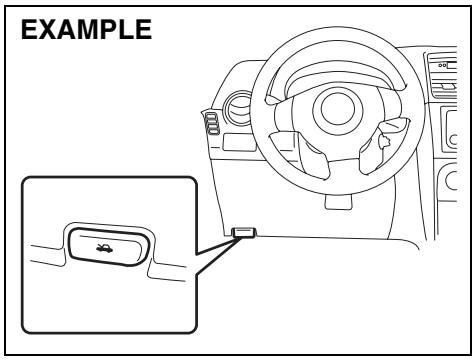

79J077

To open the engine hood:

1) Pull the hood release handle located on the outboard side of the driver's side of the instrument panel. This will disengage the engine hood lock half-way.

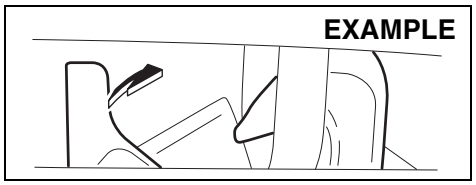

80J045

2) Push the under-hood release lever sideways with your finger, as shown in the illustration. While pushing the lever, lift up the engine hood.

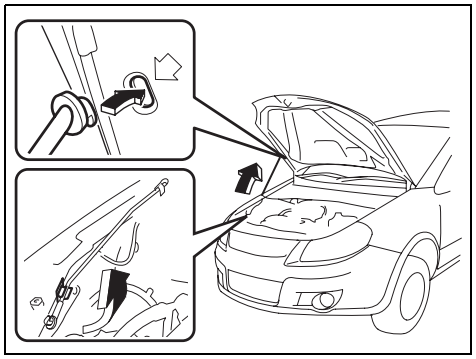

80JS024

3) Continue to lift up the hood until it is high enough to support with the prop rod.

⚠ WARNING

Make sure the hood is fully closed and latched before driving. If it is not, it can fly up unexpectedly during driving, obstructing your view and resulting in an accident.

Downloaded from www.Manualslib.com manuals search engine

Spot Light: 7
Assist Grips: 3
Coat Hooks:

Cup Holder and Storage Area (if equipped)

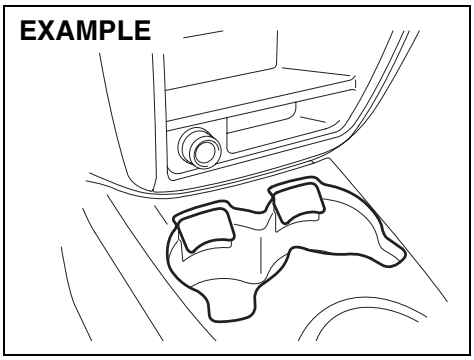

80J046

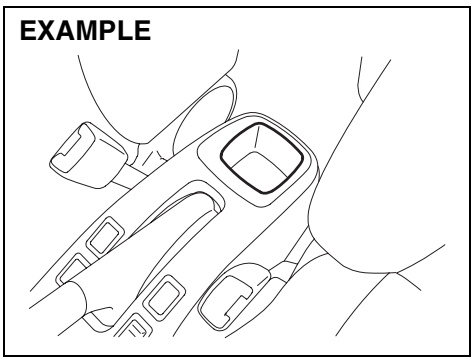

79J052

Cup holders are provided in the center console.

⚠ WARNING

Do not use the cup holder or the storage bin to hold cups containing hot liquids or sharp-edged, hard or breakable objects. Objects in these bins may be thrown about during a sudden stop or impact, and could cause personal injury.

Accessory Socket (if equipped)

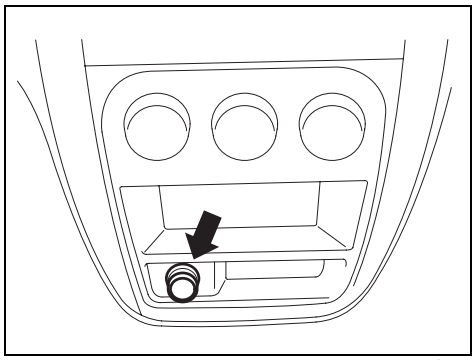

80JC044

This socket can be used to provide 12 volt/ 120 watt power for electrical accessories.

CAUTION

Use of inappropriate electrical accessories can cause damage to your vehicle's electrical system. Make sure that any electrical accessories you use are designed to plug into this type of socket.

Downloaded from www.Manualslib.com manuals search engine

Eyeglasses Holder:
Engine Hood: 5

Frame Hooks

SX4

Front (1)

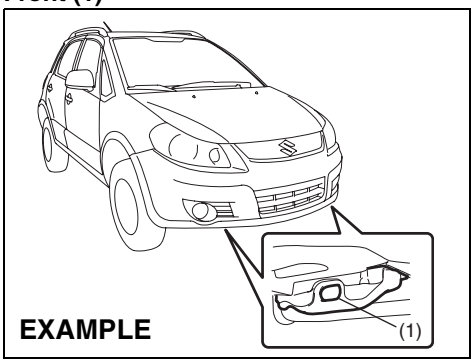

80JC048

SX4 SEDAN

Front (1)

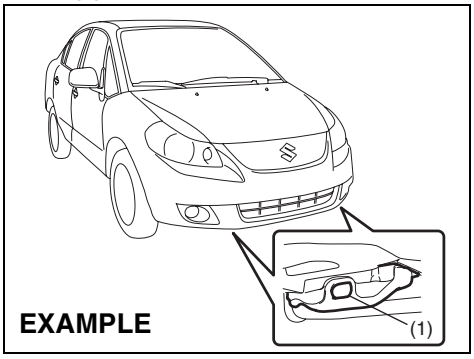

80JC049

SX4

Rear (2)

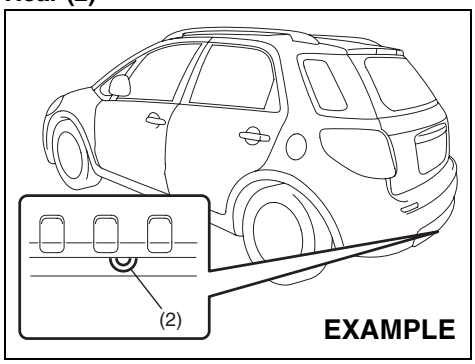

80JC061

SX4 SEDAN

Rear (2)

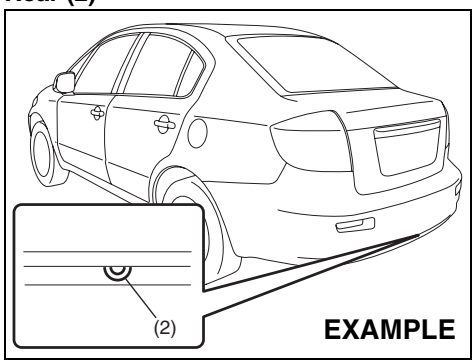

56KN033

Side (3)

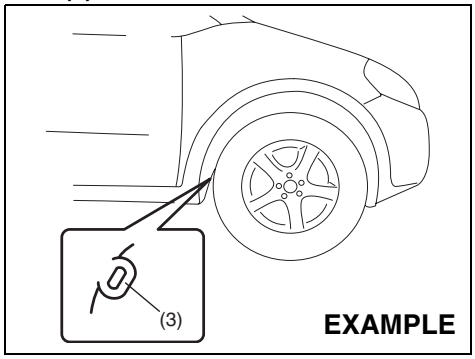

80JC062

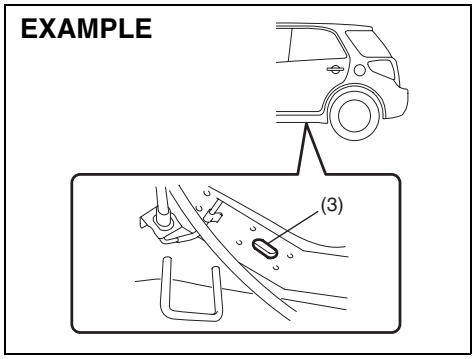

79J132

Downloaded from www.Manualslib.com manuals search engine

OTHER CONTROLS AND EQUIPMENT

Frame hooks are provided on the front (1), rear (2) and side (3) of the vehicle. The hooks (1) and (2) are used for emergency situations. The hooks (3) are used for trailer/train shipping purposes.

To tow your vehicle on the road or highway, follow the instruction of “Towing” in “EMERGENCY SERVICE” or “VEHICLE LOADING AND TOWING” section.

⚠ WARNING

Do not use the frame hooks to tow another vehicle or to have your vehicle towed on the road or highway. The hooks (1) and (2) are designed for use in emergency situations only, such as if your vehicle or another vehicle gets stuck in deep mud or snow.
The hooks (3) are provided for trailer/train shipping purposes.

CAUTION

Never use the hooks (1) and (2) for trailer/train shipping purposes to prevent damage to the vehicle.

Tire Changing Tool

SX4

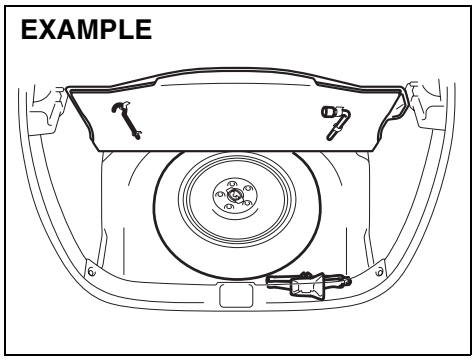

80JC014

SX4 SEDAN

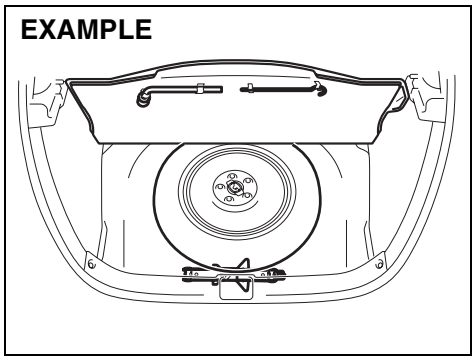

80JC045

The jack, wheel brace, jack handle are stowed in the luggage compartment.

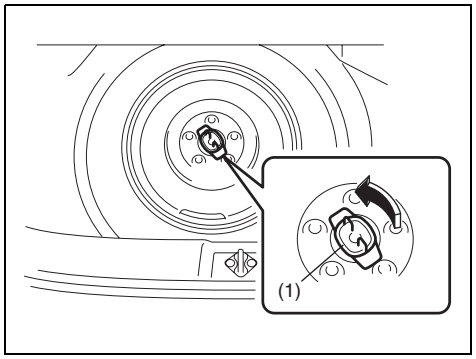

80J048

To remove the spare tire, turn its bolt (1) counterclockwise and remove it.

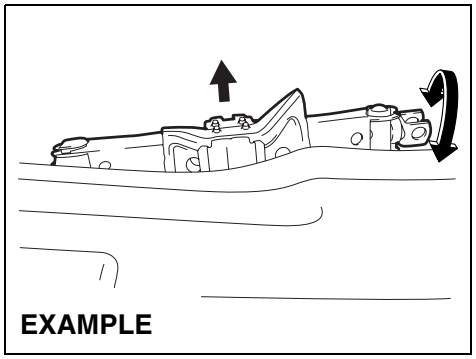

79J085

To remove the jack, turn its shaft counterclockwise and pull the jack out of the storage bracket.

Downloaded from www.Manualslib.com manuals search engine

Accessory Socket: 8
Frame Hooks: 5, 6

SX4

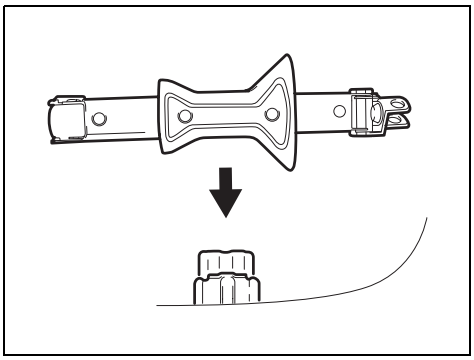

79J086

SX4 SEDAN

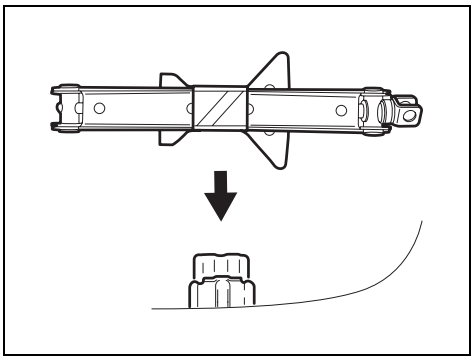

80JC015

To stow the jack, place it in the storage bracket and turn the shaft clockwise until the jack is securely held in place.

⚠ WARNING

The jack should be used only to change wheels. It is important to read the jacking instructions in the "EMERGENCY SERVICE" section of this manual before attempting to use the jack.

⚠ WARNING

After using the jack, jack handle and wheel wrench, be sure to stow them securely or they can cause injury if an accident occurs.

Luggage Compartment Cover (if equipped)

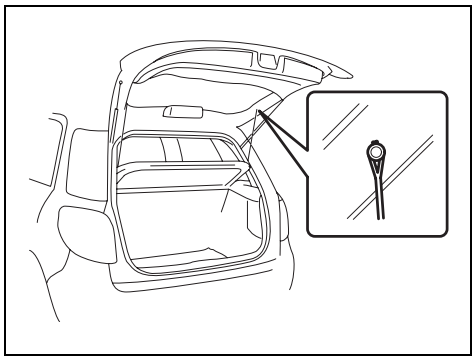

80J049

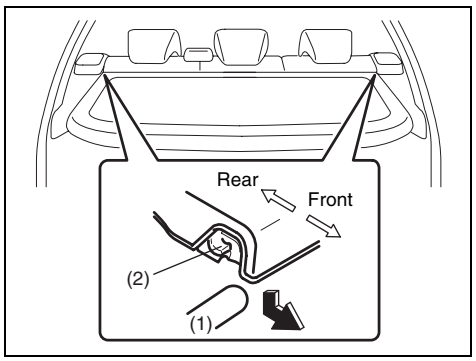

80J050

Downloaded from www.Manualslib.com manuals search engine

OTHER CONTROLS AND EQUIPMENT

Luggage or other cargo placed in the luggage compartment can be hidden from view by a luggage compartment cover.

⚠ WARNING

Do not carry items on top of the luggage compartment cover, even if they are small and light. Objects on top of the cover could be thrown about in an accident, causing injury, or could obstruct the driver's rear view.

Luggage Compartment Light (SX4)

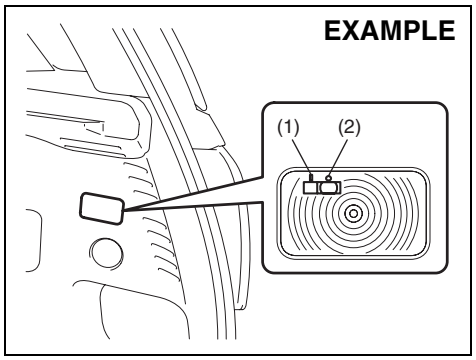

79J053

When you open the tailgate with the luggage compartment light switch in the "ON" position (1), the light comes on and remains on as long as you keep the tailgate open.
When the luggage compartment light switch is in the "OFF" position (2), the light remains off regardless of whether the tailgate is opened or closed.

CAUTION

Do not leave the tailgate open with the luggage compartment light switch in the "ON" position for a long time, or the battery will discharge.

Trunk Light (SX4 SEDAN)

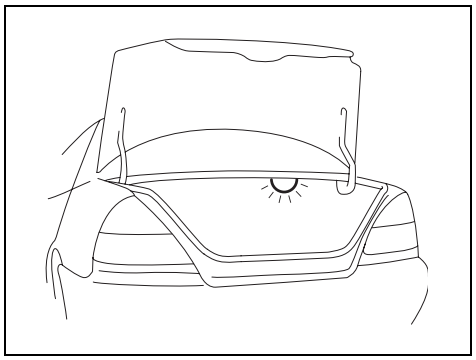

56KN038

When you open the trunk lid, the trunk light comes on and remains on as long as you keep the lid open.

CAUTION

Do not leave the trunk lid open for a long time, or the battery will discharge.

Downloaded from www.Manualslib.com manuals search engine

Radio Antenna

SX4

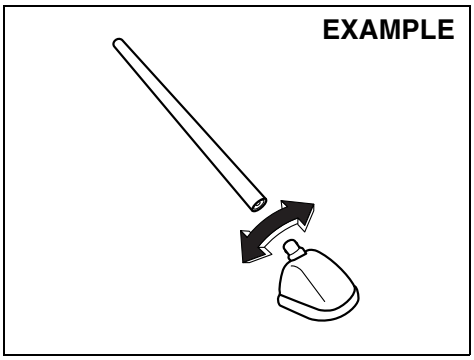

63J055

The radio antenna at the end of the roof is removable. If the antenna hits anything such as when parking in a garage with a low ceiling, remove the antenna. Turn the antenna counterclockwise. To reinstall the antenna, turn it clockwise firmly by hand.

CAUTION

To avoid damage to the radio antenna:
- **Remove the antenna before using an automatic car wash.**
- **Remove the antenna when it is possible for the antenna to hit something such as a low ceiling in a parking garage or putting a car cover over your car.**
- **Remove the antenna before putting a car cover over your vehicle.**

SX4 SEDAN

The radio antenna wire is printed inside the rear window.

CAUTION

- **Do not attach any metal objects to the rear window glass, or place metallic film near it. Either of these conditions may cause poor reception or noise.**
- **When cleaning the inside of the rear window, be careful not to scratch or damage the rear window antenna. Wipe the rear window lightly along the antenna with a dampened soft cloth.**

Roof Rails or Roof Rack Anchors (if equipped)

Roof rails

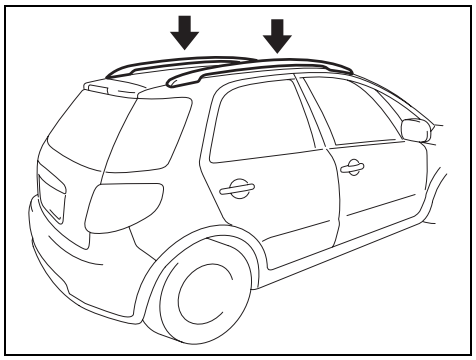

79J167

Roof rack anchors

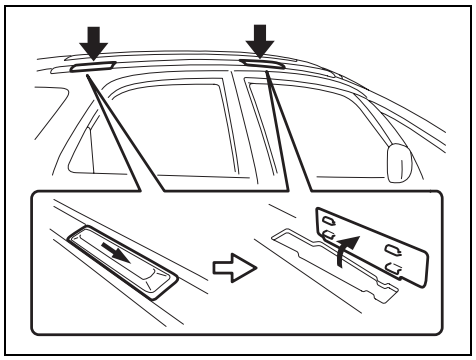

80J082

Downloaded from www.Manualslib.com manuals search engine

You can use the roof rails or the roof rack anchors to attach the optional roof rack which is available at your SUZUKI dealer. If you use a roof rack, observe the instructions and precautions in this section and provided with the roof rack.

- Make sure the roof rack is securely installed.
- To mount various types of cargo (such as skis, bicycles, etc.) properly, use suitable attachments which are available from your SUZUKI dealer. Be sure to install the attachments properly and securely according to the instructions provided. Do not mount cargo directly on the roof panel. The cargo can damage the roof panel.
- The gross weight of the roof rack plus cargo must not exceed the loading capacity (50 kg (110 lbs)). Also, do not let the gross vehicle weight (fully loaded vehicle including driver, passengers, cargo, roof load and trailer tongue weight) exceed the Gross Vehicle Weight Rating (GVWR) listed in the "SPECIFICATIONS" section of this manual.
- Mount and secure the cargo onto the roof rack properly according to the instructions provided. Be sure to stow the heaviest items at the bottom and distribute the cargo as evenly as possible.
- Do not carry items so large that they hang over the bumpers or the sides of the vehicle, or block your view.
- Secure the front and rear ends of long items – such as wood panels, surfboards and so forth – to both the front and rear of the vehicle. You should protect the painted surfaces of the vehicle from scuffing caused by tie-down ropes.
- Check periodically to make sure the roof rack is securely installed and free from damage.
- For vehicles with roof rack anchors, make sure the anchors are covered with the caps when not in use.

⚠ WARNING

- **Abrupt maneuvers or failure to properly secure cargo can allow the cargo to fly off the vehicle and hit others, causing personal injury or property damage.**
- **Mount cargo securely and avoid abrupt maneuvers such as "jack-rabbit" starts, sharp turns, fast cornering and sudden braking. Check periodically to make sure that cargo is securely fastened.**
- **Large, bulky, long, or flat items can affect vehicle aerodynamics or be caught by the wind, and can reduce vehicle control resulting in an accident and personal injury. Drive cautiously at a safely reduced speed when carrying this type of cargo.**

Downloaded from www.Manualslib.com manuals search engine

OPERATING YOUR VEHICLE

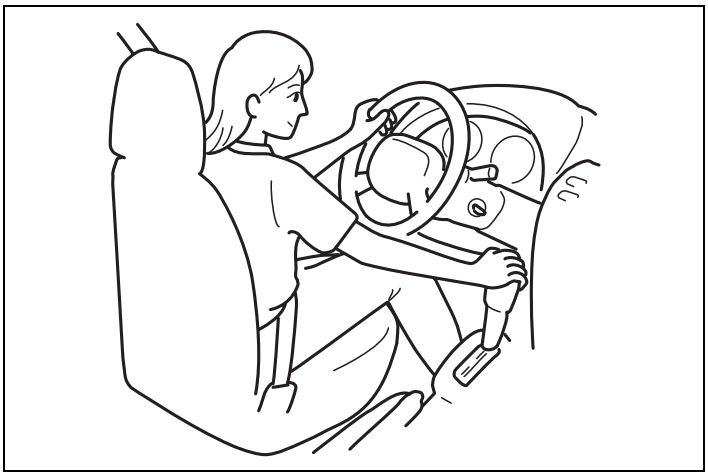

60G408

Exhaust Gas Warning 6-1
Daily Inspection Checklist 6-1
Starting the Engine 6-2
Engine Block Heater (if equipped) 6-4
Using the Transaxle 6-5
Using the 2WD/i-AWD (intelligent All Wheel Drive) Switch (if equipped) 6-7
Braking 6-9
Electronic Stability Program (ESP®) (if equipped) 6-12
Tire Pressure Monitoring System (TPMS) 6-14
Break-In 6-18
Catalytic Converter 6-19
Improving Fuel Economy 6-20

Downloaded from www.Manualslib.com manuals search engine

Exhaust Gas Warning: NO
Daily Inspection Checklist: NO

Exhaust Gas Warning

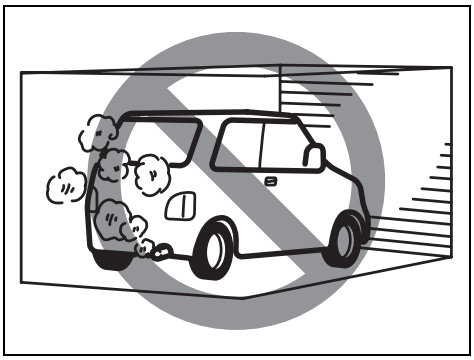

52D334

⚠ WARNING

Avoid breathing exhaust gases. Exhaust gases contain carbon monoxide, a potentially lethal gas that is colorless and odorless. Since carbon monoxide is difficult to detect by itself, be sure to take the following precautions to help prevent carbon monoxide from entering your vehicle.

- **Do not leave the engine running in garages or other confined areas.**

(Continued)

⚠ WARNING

(Continued)

- **Do not park with the engine running for a long period of time, even in an open area. If it is necessary to sit for a short time in a parked vehicle with the engine running, make sure the air intake selector is set to "FRESH AIR" and the blower is at high speed.**
- **Avoid operating the vehicle with the tail gate or trunk open. If it is necessary to operate the vehicle with the tail gate or trunk open, make sure the sunroof (if equipped) and all windows are closed, and the blower is at high speed with the air intake selector set to "FRESH AIR".**
- **To allow proper operation of your vehicle's ventilation system, keep the air inlet grille in front of the windshield clear of snow, leaves or other obstructions at all times.**
- **Keep the exhaust tailpipe area clear of snow and other material to help reduce the buildup of exhaust gases under the vehicle. This is particularly important when parked in blizzard conditions.**
- **Have the exhaust system inspected periodically for damage and leaks. Any damage or leaks should be repaired immediately.**

Daily Inspection Checklist

Before Driving

1) Make sure that windows, mirrors, lights and reflectors are clean and unobstructed.
2) Visually check the tires for the following points:
   – the depth of the tread groove
   – abnormal wear, cracks and damage
   – loose wheel nuts
   – existence of foreign material such as nails, stones, etc.

Refer to "Tires" in "INSPECTION AND MAINTENANCE" section for details.

3) Look for fluid, oil leaks.

NOTE:
It is normal for water to drip from the air conditioning system after use.

4) Make sure the hood is fully closed and latched.
5) Check the headlights, turn signal lights, brake lights and horn for proper operation.
6) Lock all doors.
7) Adjust the seat and adjustable head restraints (if equipped).
8) Check the brake pedal.
9) Adjust the mirrors.
10) Make sure that you and all passengers have properly fastened your seat belts.
11) Make sure that all warning lights come on as the key is turned to the "ON" or "START" position.

Downloaded from www.Manualslib.com manuals search engine

12) Check all gauges.
13) Make sure that the BRAKE light turns off when the parking brake is released.

Once a week, or each time you fill your fuel tank, perform the following under-hood checks:

1) Engine oil level
2) Coolant level
3) Brake fluid level
4) Power steering (if equipped) fluid level
5) Windshield washer fluid level
6) Hood latch operation
   Pull the hood release handle inside the vehicle. Make sure that you cannot open the hood all the way without releasing the secondary latch. Be sure to close the hood securely after checking for proper latch operation. See the item "All latches, hinges and locks" of "CHASSIS AND BODY" in the "Periodic Maintenance Schedule" section in the "INSPECTION AND MAINTENANCE" section for lubrication schedule.

⚠ WARNING

Make sure the hood is fully closed and latched before driving. If it is not, it can fly up unexpectedly during driving, obstructing your view and resulting in an accident.

Starting the Engine

Before Starting the Engine

1) Make sure the parking brake is set fully.
2) Manual Transaxle – Shift into "N" (Neutral) and depress the clutch pedal all the way to the floor.
   Hold the clutch pedal while starting the engine.
   Automatic Transaxle – If the gearshift lever is not in "P" (Park) position, shift into "P". (If you need to re-start the engine while the vehicle is moving, shift into "N".)

NOTE:
The engine of manual transaxle vehicle will not start unless the clutch pedal is depressed.

NOTE:
Automatic transaxle vehicles have a starter interlock device which is designed to keep the starter from operating if the transaxle is in any of the drive positions.

⚠ WARNING

Make sure that the parking brake is set fully and the transaxle is in Neutral (or Park for vehicles with an automatic transaxle) before attempting to start the engine.

Starting a Cold Engine

With your foot off the accelerator pedal, crank the engine by turning the ignition key to "START". Release the key when the engine starts.

CAUTION

- **Stop turning the starter immediately after the engine has started or the starter system can be damaged.**
- **Do not crank the engine for more than 15 seconds at a time. If the engine doesn't start on the first try, wait about 15 seconds before trying again.**

If the engine does not start after 15 seconds of cranking, wait about 15 seconds, then press down the accelerator pedal to 1/3 of its travel and try cranking the engine again. Release the key and accelerator pedal when the engine starts.

If the engine still does not start, try holding the accelerator pedal all the way to the floor while cranking. This should clear the engine if it is flooded.

If you are unable to start the engine using this procedure, consult your SUZUKI dealer.

Starting a Warm Engine

Use the same procedure as for "Starting a Cold Engine".

Downloaded from www.Manualslib.com manuals search engine

OPERATING YOUR VEHICLE

Vehicle With Keyless Start System

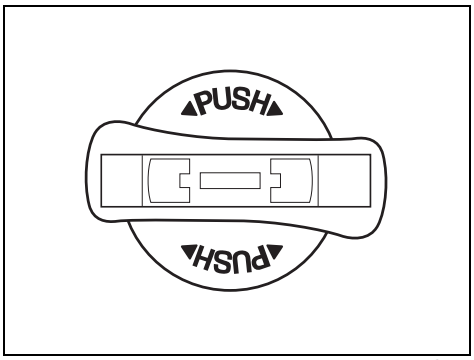

80JC002

The ignition switch can be operated without using an ignition key when the remote controller is in an area of the vehicle other than the rear luggage area. To turn the ignition switch, first push in the switch.

NOTE:
You must push in the ignition switch to turn it from the "LOCK" position to the "ACC" position. To return to the "LOCK" position from the "ACC" position, turn the ignition switch counterclockwise while pushing in the switch.

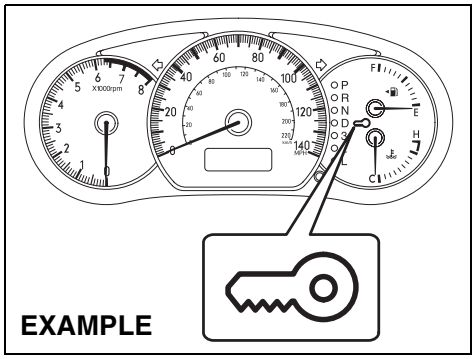

80J037

If the keyless start system blue indicator light illuminates on the instrument cluster, you can turn the ignition switch. If the red indicator light illuminates, you can not turn the ignition switch.

NOTE:
- *The ignition switch can be turned to the "ACC" position when the keyless start system blue indicator light illuminates. The blue indicator light will illuminate for several seconds when you push in the ignition switch and then will turn off to protect the system. In this case, you must release the ignition switch and push it again to illuminate the blue indicator light.*
- *If the keyless start system red indicator light illuminates, the remote controller may not be in the vehicle or the battery of the remote controller may be unreliable.*

NOTE:
- *If the battery of the remote controller runs down or there are strong radio waves or noise, the operating range may be narrower or the remote controller may be inoperative.*
- *If the remote controller is too close to the door glass, it may not operate.*
- *The ignition switch may not turn when the remote controller is on the instrument panel, in the glove box, in the door pocket, in the sun visor or on the floor.*

CAUTION

The remote controller is a sensitive electronic instrument. To avoid damaging it, do not expose it to impacts, moisture or high temperature (such as on the dashboard under direct sunlight).

You can also turn the ignition switch by inserting the ignition key into the slot.

Downloaded from www.Manualslib.com manuals search engine

Engine Block Heater (if equipped)

EXAMPLE

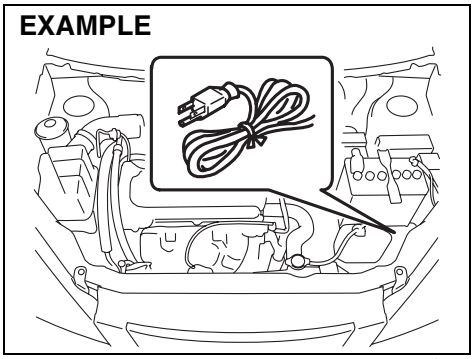

54G209

The engine block heater will help you start the engine more easily in very cold weather (–18°C (0°F) or below). To use the engine block heater:

1) Turn off the engine.
2) Open the engine hood.
3) Untie the block heater cord and remove the block heater plug cap. When the engine block heater is not in use, ensure the heater cord is secured to prevent contact with any moving parts.
4) Using a heavy-duty, three-prong grounded extension cord, plug the female end into the block heater socket and the male end into a normal, grounded 110-volt AC outlet.

NOTE:
Activate the heater at least four hours before you start the engine. However, as the heating time varies depending on the ambient temperature and other factors, adjust the time by observing the engine cranking condition.

⚠ WARNING

To avoid serious personal injury caused by electrical shock or fire:
- **Do not plug the cord into a non-grounded outlet. Only use a properly grounded three-prong 110-volt AC outlet.**
- **Do not use a 2-wire (non-grounded) extension cord.**
- **Only use a heavy-duty, three-prong extension cord rated for at least 15 amps.**

After using the block heater:

1) Unplug the extension cord and reinstall the plug cap.
2) Tie the block heater cord back to its original position.

CAUTION

Secure the block heater cord back to its original position or to the routed position. A loose cord could get caught in the engine accessory drive belt(s) or other moving parts.

3) Close the engine hood securely before starting the engine.

Downloaded from www.Manualslib.com manuals search engine

OPERATING YOUR VEHICLE

Using the Transaxle

4-Speed Automatic Transaxle

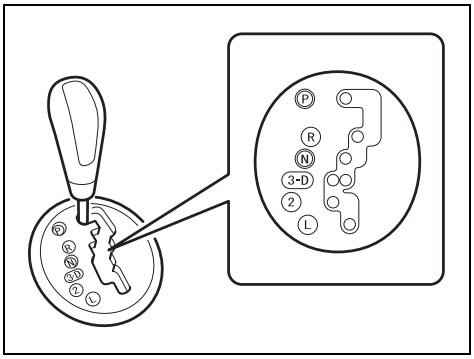

77J021

Gearshift lever

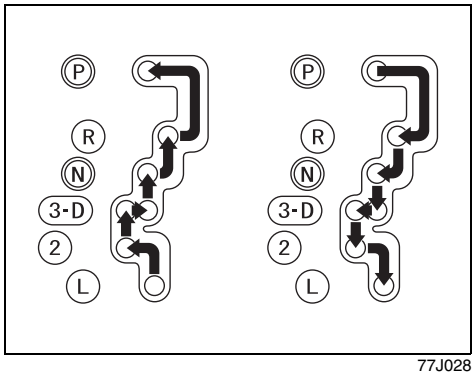

77J028

⚠ WARNING

Always depress the brake pedal before shifting from "P" (Park) (or "N" (Neutral) if the vehicle is stationary) to a forward or reverse gear, to help prevent the vehicle from moving unexpectedly when you shift.

Use the gearshift lever positions as described below:

P (Park)
Use this position to lock the transaxle when the vehicle is parked or when starting the engine. Shift into Park only when the vehicle is completely stationary.

R (Reverse)
Use this position to reverse the vehicle from stop. Make sure that vehicle is completely stationary before shifting into Reverse.

N (Neutral)
Use this position for starting the engine if the engine stalls and you need to restart it while the vehicle is moving. You may also shift into Neutral and depress the brake pedal to hold the vehicle stationary during idling.

D (Drive)
Use this position for all normal driving.

With the gearshift lever in "D" range you can get an automatic downshift by pressing the accelerator pedal. The higher the vehicle speed is, the more you need to press the accelerator pedal to get a downshift.

3 (Low 3)
Use this position for driving on moderate uphill and downhill gradients. The engine braking effect on moderate downhills can be used in this position. The transaxle shifts up only to 3rd gear.

2 (Low 2)
Use this position to provide extra power when climbing hills, or to provide engine braking when going down hills.

Downloaded from www.Manualslib.com manuals search engine

L (Low 1)
Use this position to provide maximum power when climbing steep hills or driving through deep snow or mud, or to provide maximum engine braking when going down steep hills.

NOTE:
If you move the gearshift lever to a lower gear while driving faster than the maximum allowable speed for the lower gear, the transaxle will not actually downshift until your speed drops below the maximum speed for the lower gear.

CAUTION

Be sure to take the following precautions to help avoid damage to the automatic transaxle:
- **Make sure that the vehicle is completely stationary before shifting into "P" or "R".**
- **Do not shift from "P" or "N" to "R", "D", "3", "2", or "L" when the engine is running above idle speed.**
- **Do not rev the engine with the transaxle in a drive position ("R", "D", "3", "2", or "L") and the front wheels not moving.**
- **Do not use the accelerator to hold the vehicle on a hill. Use the vehicle's brakes.**

Manual Transaxle

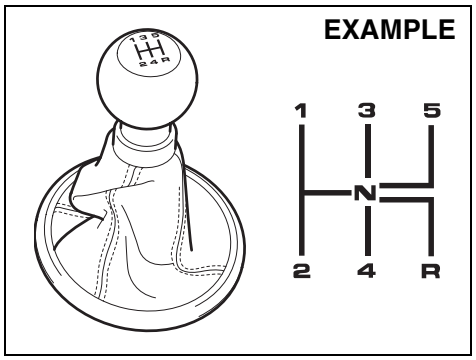

79J002

Starting off
To start off, depress the clutch pedal all the way to the floor and shift into 1st gear. After releasing the parking brake, gradually release the clutch. When you hear a change in the engine's sound, slowly press the accelerator while continuing to gradually release the clutch.

Shifting
All forward gears are synchronized, which provides for quiet, and easy shifting. Always depress the clutch pedal all the way to the floor before shifting gears. Keep the engine speed does not rise into the red zone of the tachometer.

⚠ WARNING

- **Reduce your speed and downshift to a lower gear before going down a long or steep hill. Downshifting will allow the engine to provide braking. Avoid riding the brakes or they may overheat, resulting in brake failure.**
- **When driving on slippery roads, be sure to slow down before downshifting. Large and sudden changes in engine speed may cause loss of traction, which could cause you to lose control.**
- **Make sure that the vehicle is completely stopped before you shift into reverse.**

CAUTION

- **To help avoid clutch damage, do not use the clutch pedal as a footrest while driving or use the clutch to keep the vehicle stationary on a slope. Depress the clutch fully when shifting.**
- **When shifting or starting off, do not race the engine. Racing the engine can shorten engine life and affect smooth shifting.**

Downloaded from www.Manualslib.com manuals search engine

Using the 2WD/i-AWD (intelligent All Wheel Drive) Switch (if equipped)

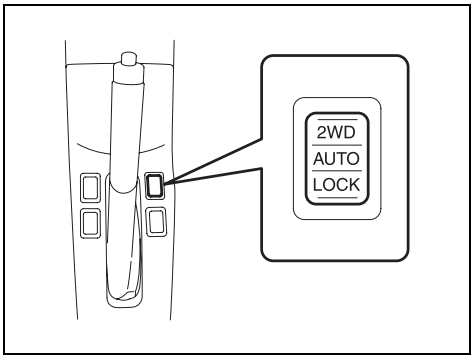

80J009

This i-AWD system enables you to select the driving mode according to the driving conditions by operating the 2WD/i-AWD switch. With this feature, you can select 3 mode positions, “2WD”, “i-AWD AUTO” and “i-AWD LOCK” by operating the 2WD/i-AWD switch even when the vehicle is moving, provided the front wheels are in the straight ahead position.

Description of 3 Mode 4 x 4 System Positions

2WD
In this position, engine power is supplied to the front axle only. Use this position for normal driving (on dry, hard surfaces).

i-AWD AUTO
In this position, engine power is supplied to the front and rear axles at normal speed, providing greater traction than 2-wheel drive. Use this position for driving on paved roads or on slippery roads (icy, snow-covered, muddy, etc.).

In the AUTO mode, the i-AWD controller judges the driving conditions using signals from sensors.
When slipping of the front wheels is detected, the electronically controlled coupling supplies optimum driving force to the rear wheels. This function improves driving stability and running through performance on rough roads and stabilizes driving performance even on a snow covered up-hill road or the like.
Also, during normal driving on paved roads, torque distribution to the rear wheels is reduced to achieve the nearly front wheel drive condition, thereby fuel consumption is improved.

i-AWD LOCK
In this position, engine power is supplied to the front and rear axles at reduced speed. Use this position when it is hard to start off in the “i-AWD AUTO” mode such as in mud, sand or on snow.

NOTE:
- *Avoid operating your vehicle in the “i-AWD LOCK” on wet pavement as much as possible. Operating your vehicle in the “i-AWD LOCK” on wet pavement may cause severe damage to the drive train.*
- *As the vehicle speed increases, the “i-AWD LOCK” mode is automatically canceled and the “i-AWD AUTO” mode is selected.*
- *When the ignition switch is turned to the “OFF” position, the “i-AWD LOCK” mode is canceled.*

2WD/i-AWD Switch Operation
Operate the 2WD/i-AWD switch according to the appropriate procedure described below:

How to turn on 2WD/i-AWD switch
2WD/i-AWD switch will activate when the ignition switch is turned on.

From 2WD to i-AWD AUTO
Turn the 2WD/i-AWD switch to the neutral position, and the “i-AWD AUTO” indicator will come on.

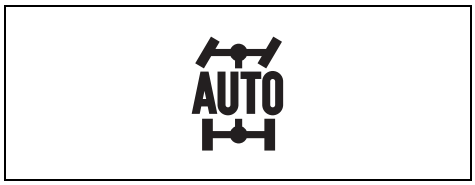

79J040

Downloaded from www.Manualslib.com manuals search engine

From i-AWD AUTO to i-AWD LOCK
Push the "i-AWD LOCK" switch for a few seconds until the "i-AWD LOCK" indicator will come on.

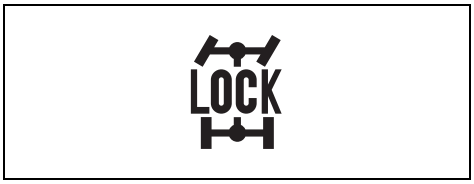

79J100

From i-AWD LOCK to i-AWD AUTO
Push the "i-AWD LOCK" switch, and the "i-AWD AUTO" indicator will come on.

From i-AWD AUTO or LOCK to 2WD
Push the "2WD" switch, and the "i-AWD AUTO" or "i-AWD LOCK" indicator will turn off.

NOTE:
- *The 2WD/i-AWD switch can be operated when the vehicle is either stopped or moving.*
- *Make sure that the front wheels are in the straight ahead position when operating the 2WD/i-AWD switch.*
- *While making turns or accelerating and decelerating, operating the 2WD/i-AWD switch or turning off the key switch in the "i-AWD AUTO" or "i-AWD LOCK" mode may cause a shock, but this is not a system malfunction.*
- *While driving in the "i-AWD LOCK" mode, as the vehicle speed increases, the driving mode changes to the "i-AWD AUTO" mode automatically. Even when the vehicle speed reduces, on the other hand, the driving mode does not return to the "i-AWD LOCK" mode automatically. You should press the "i-AWD LOCK" switch according to the driving conditions.*
- *Any forcible operation while driving off-road in the sand or water or when a wheel has run off the road, the difference of the revolution between front wheels and rear wheels increases (wheels run idle). If this state continues, the oil temperature of the driving system parts rises.*
  In such case, the "i-AWD AUTO" indicator light blinks and the driving mode changes to the 2WD mode to protect the driving system parts.
  When you operate your vehicle in the i-AWD mode continuously, park the vehicle at a safe place and run the engine idle. After some time, the "i-AWD AUTO" indicator light turns on again and the driving mode returns to the "i-AWD AUTO" mode.

CAUTION

- **Never use the "i-AWD LOCK" mode when driving on dry paved roads. Avoid using the "i-AWD LOCK" mode when driving on wet paved roads as much as possible. Use of the "i-AWD LOCK" mode in above conditions will apply excessive force to the driving system and may cause a critical failure. Also, the tires may wear faster and fuel consumption may be affected adversely.**
- **Note that i-AWD vehicles are not all-around vehicles. Be sure to observe following instructions when driving your vehicle.**
  - **Do not drive through water like crossing a river.**
  - **Do not drive continuously where front wheels tend to race in places such as sand and mud.**
  - **When any wheel is in the air for such reason as running off the road, do not race it needlessly.**
- **If the "i-AWD AUTO" and the "i-AWD LOCK" indicator lights stay on and come on simultaneously when driving, there may be something wrong the i-AWD system. Have the system inspected by an authorized SUZUKI dealer.**

Downloaded from www.Manualslib.com manuals search engine

CAUTION

Unevenly worn tires can cause problems in the operation of the 2WD/i-AWD switch. Be sure to rotate the tires according to the maintenance schedule. Refer to "Tires" and "Maintenance Schedule" in the "INSPECTION AND MAINTENANCE" section for proper tire rotation procedures.

Braking

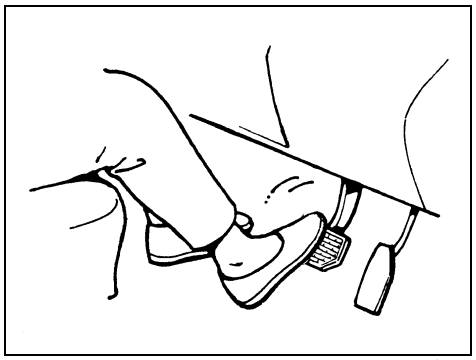

60G165

The distance needed to bring any vehicle to a halt increases with the speed of the vehicle. The braking distance needed, for example, at 60 km/h (37 mph) will be approximately 4 times greater than the braking distance needed at 30 km/h (19 mph). Start to brake the vehicle when there is plenty of distance between your vehicle and the stopping point, and slow down gradually.

⚠ WARNING

If water gets into the brake drums, brake performance may become poor and unpredictable.
After driving through water or washing the underside of the vehicle, test the brakes while driving at a slow speed to see if they have maintained their normal effectiveness. If the brakes are less effective than normal, dry them by repeatedly applying the brakes while driving slowly until the brakes have regained their normal effectiveness.

Power Assisted Brakes

Your vehicle has power assisted brakes. If power assistance is lost due to a stalled engine or other failures, the system is still fully operational on reserve power and you can bring the vehicle to a complete stop by pressing the brake pedal once and holding it down. The reserve power is partly used up when you depress the brake pedal and reduces each time the pedal is pressed. Apply smooth and even pressure to the pedal. Do not pump the pedal.

Downloaded from www.Manualslib.com manuals search engine

Catalytic Converter: NO
Improving Fuel Economy: NO

⚠ WARNING

Even without reserve power in the brake system, you can still stop the vehicle by pressing the brake pedal harder than normally required. However, the stopping distance may be longer.

Brake Assist System

When you slam the brakes on, the brake assist system judges as an emergency stop and provides more powerful braking for a driver who cannot hold down the brake pedal firmly.

NOTE:
If you depress the brakes forcefully, you may hear a clicking sound in the brake pedal. This is normal and indicates that the brake assist system is activated properly.

Anti-Lock Brake System (ABS) (if equipped)

ABS will help you avoid skidding by electronically controlling braking pressure. It will also help you maintain steering control when braking on slippery surfaces or when braking hard.

The ABS works automatically, so you do not need any special braking technique. Just push the brake pedal down without pumping. The ABS will operate whenever it senses that the wheels are locking up.

You may feel the brake pedal pulsate while the ABS is operating.

NOTE:
The ABS will not work if vehicle speed is under 5 – 6 km/h (3 – 4 mph).

⚠ WARNING

- **On some types of loose surfaces (such as gravel, snow-covered roads, etc.), the stopping distance required for an ABS-equipped vehicle may be slightly greater than for a comparable vehicle with a conventional brake system. With a conventional brake system, skidding tires are able to "plow" the gravel or snow layer, shortening the stopping distance. ABS minimizes this resistance effect. Allow for extra stopping distance when driving on loose surfaces.**
- **On regular paved roads, some drivers may be able to obtain slightly shorter stopping distances with conventional brake systems than with ABS.**
- **In both of the above conditions, ABS will still offer the advantage of helping you maintain directional control. However, remember that ABS will not compensate for bad road or weather conditions or poor driver judgment. Use good judgment and do not drive faster than conditions will safely allow.**

Downloaded from www.Manualslib.com manuals search engine

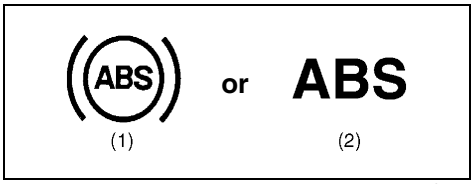

54G140

⚠ WARNING

If the ABS warning light ((1) or (2)) on the instrument panel comes on and stays on while driving, there may be a problem with the ABS system.
If this happens:
1) Pull off the road and stop carefully.
2) Turn the ignition switch to "LOCK" and then start the engine again.
If the warning light comes on briefly then turns off, the system is normal. If the warning light still stays on, have the system inspected by your SUZUKI dealer immediately. If the ABS system becomes inoperative, the brake system will function as an ordinary brake system that has no ABS.

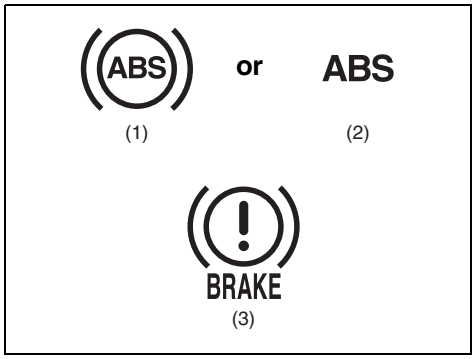

65D451

⚠ WARNING

If the ABS warning light ((1) or (2)) and the Brake system warning light (3) on the instrument panel simultaneously stay on or come on when driving, both anti-lock function and rear brake force control function (Proportioning valve function) of the ABS system may have failed. This could cause the rear wheels to skid or the vehicle to spin during braking on a slippery road or hard braking on a dry paved road. If both warning lights come on, drive carefully, avoiding hard braking as much as possible, and ask your SUZUKI dealer to inspect the ABS system immediately.

How the ABS Works

A computer continuously monitors wheel speed. The computer compares the changes in wheel speed when braking. If the wheels slow suddenly, indicating a skidding situation, the computer will change braking pressure several times each second to prevent the wheels from locking. When you start your vehicle or when you accelerate after a hard stop, you may hear a momentary motor or clicking noise as the system resets or checks itself.

⚠ WARNING

The ABS may not work properly if tires or wheels other than those specified in the owner's manual are used. This is because the ABS works by comparing changes in wheel speed. When replacing tires or wheels, use only the size and type specified in this owner's manual.

Downloaded from www.Manualslib.com manuals search engine

Electronic Stability Program (ESP®) (if equipped)

ESP® is a registered trademark of DaimlerChrysler AG.

The Electronic Stability Program (ESP®) helps to control the vehicle during cornering if the vehicle is understeering or oversteering. It also assists you in maintaining traction while accelerating on loose or slippery road surfaces. It does this by regulating the engine's output, and by selectively applying the brakes. In addition, ESP® helps to avoid skidding by controlling braking pressure.

⚠ WARNING

The ESP® cannot enhance the vehicle's driving stability in all situations and does not control your vehicle's entire braking system. The ESP® cannot prevent accidents, including those resulting from excessive speed in turns, or hydroplaning. Only a safe and attentive driver can prevent accidents. The capabilities of an ESP®-equipped vehicle must never be used as a substitute for careful driving.

The ESP® has the following three systems:

Stability Control System

The vehicle stability control system helps provide integrated control of systems such as anti-lock brakes, traction control, engine control, etc. This system automatically controls the brakes and engine to help prevent the vehicle from skidding when cornering on a slippery road surface or when turning the steering wheel abruptly.

Traction Control System

The traction control system automatically helps prevent the spinning of wheels when the vehicle is started or accelerated on slippery road surfaces. The system operates only if it senses that some of the wheels are spinning or beginning to lose traction. When this happens, the system operates the front or rear brakes and reduces engine power to limit wheel spin.

NOTE:
You may hear a clicking sound in the engine compartment for a few seconds when you start the engine or just after the vehicle begins to move. This means that the above systems are in the self-check mode. This sound does not indicate a malfunction.

Anti-Lock Braking System (ABS)

ABS will help you avoid skidding by electronically controlling braking pressure. It will also help you maintain steering control when braking on slippery surfaces or when braking hard. The ABS works automatically, so you do not have to use any special braking technique. Just push the brake pedal down without pumping. The ABS will operate whenever it senses that wheels are locking up. You may feel the brake pedal pulsate while the ABS is operating.
(For more information on ABS, see "Braking" in the "OPERATING YOUR VEHICLE" section.)

NOTE:
If the ABS system is activated, you may hear a clunking noise and/or feel pulsating in the brake pedal. This is normal and indicates that the brake fluid pressure is being controlled properly.

Downloaded from www.Manualslib.com manuals search engine

⚠ WARNING

- **The ESP® may not work properly if tires or wheels other than those specified in the Owner's Manual are used. When replacing tires or wheels, use only the size and type specified in this Owner's Manual.**
- **The ESP® may not work properly if tires are not inflated to the recommended tire inflation pressure.**
- **The ESP® may not work properly if tires are fitted with tire chains.**
- **The ESP® may not work properly if the tires are excessively worn. Be sure to replace tires when the tread wear indicators in the grooves appear on the tread surface.**
- **The ESP® is not a substitute for winter tires or tire chains on a snow covered road.**

⚠ WARNING

- **The ESP® may not work properly if engine related parts such as the muffler are not equivalent to standard equipment or are extremely deteriorated.**
- **Do not modify the vehicle's suspension since the ESP® may not operate correctly.**

The ESP® indicator lights are described below:

SLIP Indicator Light

66J033

When one of the ESP® systems other than ABS is activated, the SLIP indicator light in the instrument cluster blinks 5 times per second.

CAUTION

If the SLIP indicator light comes on and stays on while driving, there may be a malfunction of the ESP® systems (other than ABS). You should have the systems inspected by an authorized SUZUKI dealer.

NOTE:
When the SLIP indicator light comes on and stays on while driving, indicating a malfunction of the ESP® systems (other than ABS), the brake system will function as an ordinary ABS with no additional ESP® functions.

NOTE:
When you disconnect and re-connect the battery, ESP® system functions other than ABS will be deactivated and the slip indicator light will blink 1 time per second. In this case, use the following procedure to re-activate the ESP® systems:

1) *Drive your vehicle straight ahead without tire slippage at a speed until the slip indicator is turned off. (Drive straight for approximately 35 km/h (22 mph) or more and 10 seconds or more.)*
2) *The slip indicator light will go out and the ESP® systems (other than ABS) will be re-activated.*

It may take more than few seconds before the slip indicator light goes out depending on the road surface condition.

"ESP" Warning Light

66J031

When the ESP® systems (other than ABS) have a system malfunction, the "ESP" warning light in the instrument cluster comes on.

Downloaded from www.Manualslib.com manuals search engine

CAUTION

If the "ESP" warning light comes on, or stays on while driving, there may be a malfunction of the ESP® systems (other than ABS). You should have the systems inspected by an authorized SUZUKI dealer.

NOTE:
When the "ESP" warning light comes on, or stays on while driving, indicating a malfunction of the ESP® systems (other than ABS), the brake system will function as an ordinary ABS that has no additional ESP® functions.

"ESP OFF" Indicator Light

66J032

You should turn the ESP® on during your ordinary driving, so that you have the benefits of all of the ESP® systems.

It may be required to turn the ESP® systems (other than ABS) off if your vehicle is stuck in sand, mud, or snow, where wheel spin is necessary.

"ESP OFF" switch

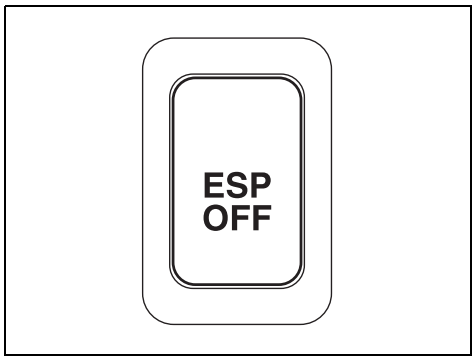

62J142

When the "ESP OFF" switch located at the center console is pushed and held to turn off the ESP® systems (other than ABS), the "ESP OFF" indicator light in the instrument cluster comes on.
When you have turned the ESP® systems (other than ABS) off, make sure to turn them back on before resuming ordinary driving.
When you push the "ESP OFF" switch again, the "ESP OFF" indicator light will go out and all of the ESP® systems will be activated.

ABS Warning Light / Brake System Warning Light

See "Braking" in the "OPERATING YOUR VEHICLE" section.

Tire Pressure Monitoring System (TPMS)

The tire pressure monitoring system is designed to alert you when one or more of the tires on your vehicle is significantly under-inflated. A Tire Pressure Monitoring System (TPMS) sensor containing a unique identification code is mounted on each wheel. The TPMS sensors transmit tire pressure signals to a central receiver which relays the information to a tire pressure monitoring system controller. When the inflation pressure of one or more tires indicates significant under-inflation, the low tire pressure warning light shown below comes on.

Downloaded from www.Manualslib.com manuals search engine

Low Tire Pressure Warning Light

52D305

⚠ WARNING

Each tire, including the spare (if provided), should be checked monthly when cold and inflated to the inflation pressure recommended by the vehicle manufacturer on the vehicle placard or tire inflation pressure label. (If your vehicle has tires of a different size than the size indicated on the vehicle placard or tire inflation pressure label, you should determine the proper tire inflation pressure for those tires.)
As an added safety feature, your vehicle has been equipped with a tire pressure monitoring system (TPMS) that illuminates a low tire pressure telltale when one or more of your tires is significantly under-inflated.
Accordingly, when the low tire pressure telltale illuminates, you should stop and check your tires as soon as possible, and inflate them to the proper pressure.

(Continued)

⚠ WARNING

(Continued)
Driving on a significantly under-inflated tire causes the tire to overheat and can lead to tire failure. Under-inflation also reduces fuel efficiency and tire tread life, and may affect the vehicle's handling and stopping ability.
Please note that the TPMS is not a substitute for proper tire maintenance, and it is the driver's responsibility to maintain correct tire pressure, even if under-inflation has not reached the level to trigger illumination of the TPMS low tire pressure telltale.

⚠ WARNING

The tire pressure monitoring system is not a substitute for regular tire pressure inspections. Check tire inflation pressures monthly when cold and set to the recommended inflation pressure as specified on the vehicle's tire information placard and in the owner's manual. Refer to "Tires" in the "INSPECTION AND MAINTENANCE" section.

⚠ WARNING

If the low tire pressure warning light does not come on when the ignition is turned to the "ON" position, or comes on and blinks while driving there may be a problem with the tire pressure monitoring system. Have your vehicle inspected by an authorized SUZUKI dealer. Even if the light turns off after blinking, indicating that the monitoring system has recovered, make sure to have an authorized SUZUKI dealer check the system.

⚠ WARNING

The load rating of your tires is reduced at lower inflation pressures. If your tires become even moderately under-inflated, the vehicle load may exceed the load rating of the tires, which can lead to tire failure. The low tire pressure warning light will not alert you of this condition. The warning light will only come on when one or more of your tires become significantly under-inflated. Check and adjust your tire inflation pressure at least once a month. Refer to "Tires" in the "INSPECTION AND MAINTENANCE" section.

Downloaded from www.Manualslib.com manuals search engine

⚠ WARNING

If the low tire pressure warning light comes on and stays on, reduce your speed and avoid abrupt steering and braking. Stop in a safe place as soon as possible and check your tires.

- **If you have a flat tire, replace it with the spare tire. Refer to "Jacking Instructions" in the "EMERGENCY SERVICE" section. Refer to "Replacing Tires and/or Wheels" for instructions on how to restore normal operation of the tire pressure monitoring system after you have had a flat tire.**
- **If one or more of your tires is under-inflated adjust the inflation pressure in all of your tires to the recommended inflation pressure as soon as possible.**

Be aware that driving on a significantly under-inflated tire can cause the tire to overheat and can lead to tire failure, and may affect steering control and brake effectiveness. This could lead to an accident, resulting in severe injury or death.

The low tire pressure warning light can come on due to normal causes such as natural air leaks and pressure changes caused by changes in temperature or atmospheric pressure. Adjusting the air pressure in the tires to the pressure shown on the tire information placard should cause the low tire pressure warning light to turn off.

If the light turns on again shortly after adjusting the pressure in your tires, you may have a flat tire. If you have a flat tire, replace it with the spare tire. Refer to "Jacking Instructions" in the "EMERGENCY SERVICE" section. Refer to "Replacing Tires and/or Wheels" for instructions on how to restore normal operation of the tire pressure monitoring system after you have had a flat tire.

NOTE:

- *When the tire inflation pressure is adjusted in high altitude areas, the low tire pressure light may not turn off even after tire inflation pressure adjustment. In this case, adjust the inflation pressure to a slightly higher pressure than is shown on the tire information placard.*
- *The low tire pressure warning light may turn off temporarily after coming on. This could be due to surface temperature increases after long distance driving or traveling to a high temperature area. Even if the tire pressure warning light turns off after coming on, make sure to check the inflation pressure of all tires.*
- *To reduce the chance that the low tire pressure warning light will come on due to normal changes in temperature and atmospheric pressure, it is important to check and adjust the tire pressures when the tires are cold. Tires that appear to be at the specified pressure when checked after driving, when the tires are warm, could have pressure below the specification when the tires cool down. Also, tires that are inflated to the specified pressure in a warm garage may have pressure below the specification when the vehicle is driven outside in very cold temperature. If you adjust the tire pressure in a garage that is warmer than the outside temperature, you should add 1 psi to the recommended cold tire inflation pressure for every 10°F difference between garage temperature and outside temperature.*

For tire inflation pressure information, refer to "Tire Inflation Pressure" in the "INSPECTION AND MAINTENANCE" section.

Downloaded from www.Manualslib.com manuals search engine

TPMS Malfunction Indicator

⚠ WARNING

Your vehicle also has been equipped with a TPMS malfunction indicator to indicate when the system is not operating properly.

⚠ WARNING

The TPMS malfunction indicator is combined with the low tire pressure telltale. When the system detects a malfunction, the telltale will flash for approximately one minute and then remain continuously illuminated. This sequence will continue upon subsequent vehicle start-ups as long as the malfunction exists.

When you turn off the engine, however, the malfunction indicator resets. It takes about ten minutes after restarting the engine for the malfunction to be detected again and for the light to start flashing.

⚠ WARNING

When the malfunction indicator is illuminated, the system may not be able to detect or signal low tire pressure as intended. TPMS malfunctions may occur for a variety of reasons, including the installation of replacement or alternate tires or wheels on the vehicle that prevent the TPMS from functioning properly. Always check the TPMS malfunction telltale after replacing one or more tires or wheels on your vehicle to ensure that the replacement or alternate tires and wheels allow the TPMS to continue to function properly.

CAUTION

- **The tire pressure sensors can be damaged by the installation or removal of tires. When tires must be repaired or replaced, we highly recommend that you have them repaired or replaced by an authorized SUZUKI dealer.**
- **Do not use liquid sealants for a flat tire as air pressure sensors can be damaged.**
- **If the low tire pressure warning light comes on frequently, there may be something wrong with one of the tires or with the monitoring system. Have your vehicle inspected by an authorized SUZUKI dealer.**

TPMS Limitations

The tire pressure monitoring system may not function properly under certain circumstances. In the following situations, the low tire pressure warning light may come on and remain on or may blink.

- When you replace a flat tire with the spare tire.
- When you include the spare tire during a tire rotation.
- When the TPMS sensor is damaged during a tire replacement or liquid sealants are used to repair a flat tire.

Downloaded from www.Manualslib.com manuals search engine

- When the TPMS sensor's electronic signal is disturbed in one of the following ways:
  - Electric devices or facilities using similar radio wave frequencies are nearby.
  - A lot of snow or ice covers the vehicle, in particular, around the wheels or wheel housings.
  - Snow tires or tire chains are used.
- When you use non-genuine SUZUKI wheels or tires.

Replacing Tires and/or Wheels

If you get a flat tire, Suzuki recommends that you have an authorized SUZUKI dealer mount a new tire on the wheel that had the flat tire, and reinstall this tire on the vehicle in place of the spare. The TPMS is already set up to recognize the ID code of the original wheel, and normal TPMS operation will be restored.

If you need to replace original wheels on your vehicle, your dealer must make sure that TPMS sensors are installed in the new wheels and must set up the TPMS to recognize the new sensors.

NOTE:
A TPMS sensor is not installed in the spare tire. You should use the spare tire only in an emergency situation, and should replace the spare tire as soon as possible to restore normal TPMS operation.

⚠ WARNING

Only use tires and wheels recommended by SUZUKI as standard or optional equipment for your vehicle. Use of tires or wheels not recommended by SUZUKI can result in TPMS failure. Refer to "Tires" in the "INSPECTION AND MAINTENANCE" section for additional information.

For Vehicles Sold in U.S.A.

This device complies with Part 15 of the FCC Rules.
Operation is subject to the following two conditions:

1) This device may not cause harmful interference.
2) This device must accept any interference received, including interference that may cause undesired operation.

NOTE:
Changes or modifications not expressly approved by the party responsible for compliance could void the user's authority to operate the equipment.

Traveling to CANADA

Please note that service for the tire pressure monitoring system may not be available in CANADA should there be any problems or malfunctions in the system.

Break-In

CAUTION

The future performance and reliability of the engine depends on the care and restraint exercised during its early life. It is especially important to observe the following precautions during the initial 960 km (600 miles) of vehicle operation.

- **After starting, do not race the engine. Warm it up gradually.**
- **Avoid prolonged vehicle operation at a constant speed. Moving parts will break in better if you vary your speed.**
- **Start off from a stop slowly. Avoid full throttle starts.**
- **Avoid hard stopping, especially during the first 320 km (200 miles) of driving.**
- **Do not drive slowly with the transaxle in a high gear.**
- **Drive the vehicle at moderate engine speeds.**

Downloaded from www.Manualslib.com manuals search engine

Catalytic Converter

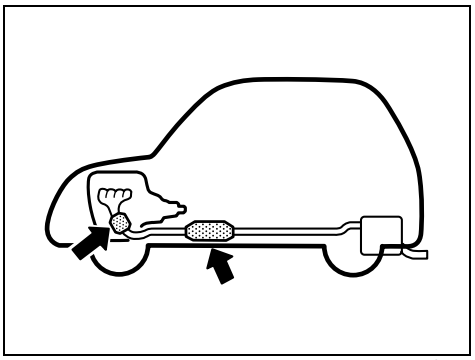

54G236

The purpose of the catalytic converter is to minimize the amount of harmful pollutants in your vehicle's exhaust. Use of leaded fuel in vehicles equipped with catalytic converters is prohibited by federal law, because lead deactivates the pollutant-reducing components of the catalyst system.

The converter is designed to last the life of the vehicle under normal usage and when unleaded fuel is used. No special maintenance is required on the converter. However, it is very important to keep the engine properly tuned. Engine misfiring, which can result from an improperly tuned engine, may cause overheating of the catalyst. This may result in permanent heat damage to the catalyst and other vehicle components.

CAUTION

To minimize the possibility of catalyst or other vehicle damage:

- **Maintain the engine in the proper operating condition.**
- **In the event of an engine malfunction, particularly one involving engine misfire or other apparent loss of performance, have the vehicle serviced promptly.**
- **Do not shut off the engine or interrupt the ignition when the transaxle is in gear and the vehicle is in motion.**
- **Do not try to start the engine by pushing or towing the vehicle or coasting down a hill.**
- **Do not idle the engine with any spark plug wires disconnected or removed, such as during diagnostic testing.**
- **Do not idle the vehicle for prolonged periods if idling seems rough or there are other malfunctions.**
- **Do not allow the fuel tank to get near the empty level.**

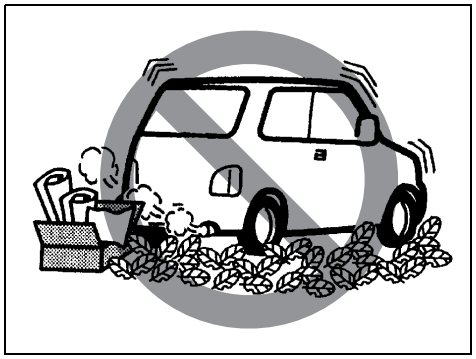

54G584S

⚠ WARNING

Be careful where you park and drive; the catalytic converter and other exhaust components can get very hot. As with any vehicle, do not park or operate this vehicle in areas where combustible materials such as dry grass or leaves can come in contact with a hot exhaust system.

Downloaded from www.Manualslib.com manuals search engine

Improving Fuel Economy

The following instructions will help you improve fuel economy.

Avoid excessive idling
If you are to wait for more than a minute while you are parked, stop the engine and start it again later. When warming up a cold engine, allow the engine to idle until the temperature gauge pointer comes up to the "C" position. In this position, the engine is sufficiently warm for starting off.

Avoid "jackrabbit" starts
Fast starts away from lights or stop signs will consume fuel unnecessarily and shorten engine life. Start off slowly.

Avoid unnecessary stops
Avoid unnecessary deceleration and stopping. Try to maintain a slow, steady speed whenever possible. Slowing down and then accelerating again uses more fuel.

Keep a steady cruising speed
Keep as constant a speed as road and traffic conditions will permit.

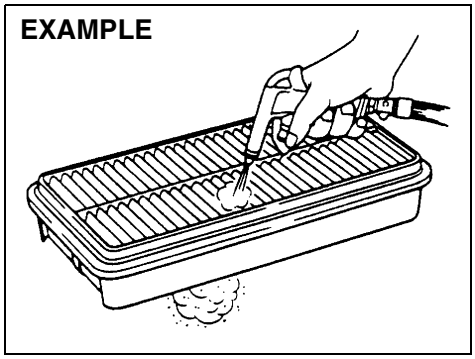

60A183S

Keep the air cleaner clean
A dirty air cleaner will cause the fuel injection system to supply too much fuel to the engine for the amount of air being supplied. The result is waste of fuel due to incomplete fuel burning.

Keep weight to a minimum
The heavier the load, the more fuel the vehicle consumes. Take out any luggage or cargo when it is not necessary.

Keep tire pressure correct
Underinflation of the tires can waste fuel due to increased running resistance of the tires. Keep your tires inflated to the correct pressure shown on the label located below the driver's side door latch striker.

Downloaded from www.Manualslib.com manuals search engine

MEMO

Downloaded from www.Manualslib.com manuals search engine

DRIVING TIPS

Highway Driving 7-1
Driving on Hills 7-1
Driving on Slippery Roads 7-2

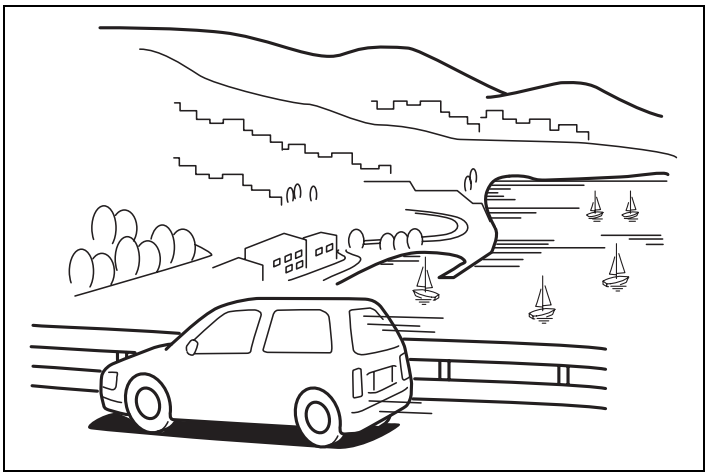

60G409

Downloaded from www.Manualslib.com manuals search engine

Highway Driving: NO
Driving on Hills: NO

DRIVING TIPS

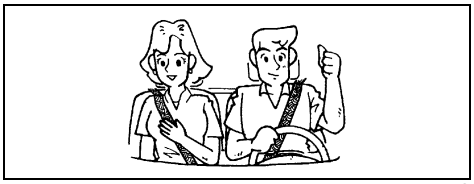

52D078S

⚠ WARNING

- **Wear Your Seat Belts at All Times. Even though air bags are equipped at the front seating positions, the driver and all passengers should be properly restrained at all times, using the seat belts provided. Refer to the "Seat Belts and Child Restraint Systems" section for instructions on proper use of the seat belts.**
- **Never drive while under the influence of alcohol or other drugs. Alcohol and drugs can seriously impair your ability to drive safely, greatly increasing the risk of injury to yourself and others. You should also avoid driving when you are tired, sick, irritated or under stress.**

Highway Driving

When driving at highway speeds, pay attention to the following:

- Stopping distance progressively increases with vehicle speed. Apply the brakes far enough ahead of the stopping point to allow for the extra stopping distance.
- On rainy days, "Hydroplaning" can occur. "Hydroplaning" is the loss of direct contact between the road surface and the vehicle's tires due to a water film forming between them. Steering or braking the vehicle while "Hydroplaning" can be very difficult, and loss of control can occur. Keep speed down when the road surface is wet.
- At high speeds, the vehicle may be affected by side winds. Therefore, reduce speed and be prepared for unexpected buffeting, which can occur at the exits of tunnels, when passing by a cut of a hill, or when being overtaken by large vehicles, etc.

Driving on Hills

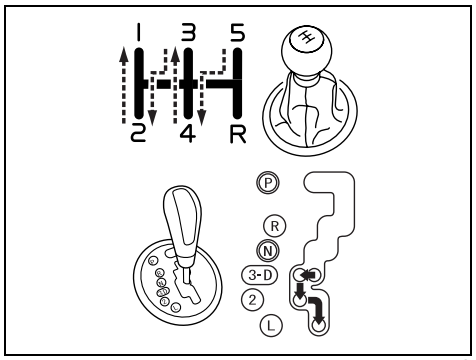

77J029S

- When climbing steep hills, the car may begin to slow down and show a lack of power. If this happens, you should shift to a lower gear so that the engine will again be operating in its normal power range. Shift rapidly to prevent the car from losing momentum.
- When driving down a hill, the engine should be used for braking by shifting to next lower gear. (Do this with EITHER an automatic or manual transaxle.)

Downloaded from www.Manualslib.com manuals search engine

Driving on Hills: NO
Driving on Slippery Roads: NO

⚠ WARNING

Try not to hold the brake pedal down too long or too often while going down a steep or long hill. This could cause the brakes to overheat, resulting in reduced braking efficiency. Failure to take this precaution could result in loss of vehicle control.

CAUTION

When descending a down hill, NEVER turn the ignition key to the "OFF" position. Emission control system and automatic transaxle (if equipped) damage may result.

Driving on Slippery Roads

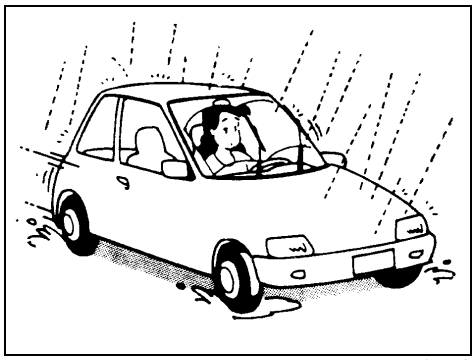

60G089S

Under wet road conditions you should drive at a lower speed than on dry roads due to possible slippage of tires during braking. When driving on icy, snow-covered, or muddy roads, reduce your speed and avoid sudden acceleration, abrupt braking, or sharp steering movements.

intelligent All Wheel Drive (i-AWD) Models

Your i-AWD provides greater traction on slippery roads than 2-wheel drive models. However, your i-AWD will not have as much traction in deep snow, mud or sand as multipurpose 4WD vehicles. You should not attempt to drive your i-AWD in deep snow, mud or sand. i-AWD models are not sport/utility vehicles, and are not designed for off-road use.

If Your Vehicle Gets Stuck

If your vehicle gets stuck in snow, mud or sand, follow the directions below:

1) Shift the transaxle back and forth between a forward range (or first gear for manual transaxle) and reverse. This will create a rocking motion which may give you enough momentum to free the vehicle. Press gently on the accelerator to keep wheel spinning to a minimum wheel rpm. Remove your foot from the accelerator while shifting.
   Do not race the engine. Excessive wheel spin will cause the tires to dig deeper, making it more difficult to free the vehicle.
2) If your vehicle remains stuck after a few minutes of rocking, get another vehicle to pull your vehicle out.

⚠ WARNING

Do not allow anyone to stand near the vehicle when you are rocking it, and do not spin the wheels faster than an indicated 40 km/h (25 mph) on the speedometer. Personal injury and/or vehicle damage may result from spinning the wheels too fast.

Downloaded from www.Manualslib.com manuals search engine

DRIVING TIPS

CAUTION

Do not continue rocking the vehicle for more than a few minutes. Prolonged rocking can cause engine overheating, transaxle or transfer case damage or tire damage.

Tire Chains

Tire chains should only be used if they are needed to increase traction or are required by law. Make sure that the chains you use are small-link chains or cable-type chains and are the correct size for your vehicle's tires. Also make sure that there is enough clearance between the fenders and the chains as installed on the tires.

Install the chains on the front tires tightly, according to the chain manufacturer's instructions. Retighten the chains after driving about 1.0 km (1/2 mile) if necessary. With the chains installed, drive slowly.

CAUTION

If you hear the chains hitting against the vehicle body while driving, stop and tighten them.
If your vehicle is equipped with full wheel caps, remove the wheel caps before installing the chains or the wheel caps can be damaged by the chain bands.

Do not drive through deep or rushing water

Driving in deep or rushing water can be hazardous. You could lose control of the vehicle and the occupants could drown. Also, your vehicle could be seriously damaged. To avoid these risks, observe the following instructions and precautions.

- Do not drive through deep or rushing water. Deep or rushing water, such as fast-moving streams or floodwaters, could carry your vehicle away from your intended path. The water is too deep if it covers your wheel hubs, axles or exhaust tailpipe. Know the depth of the water before you attempt to drive through it.
- If water blocks the tailpipe, the engine may not start or run. If the water is deep enough to get drawn into the engine intake system, the engine will be badly damaged.
- Submerged brakes will have poor braking performance. Drive slowly and carefully. Driving slowly will also help avoid water splashing onto the ignition system, which could cause the engine to stall.
- Even when driving through shallow or still waters, drive carefully since the water may be hiding ground hazards such as holes, ditches or bumps.

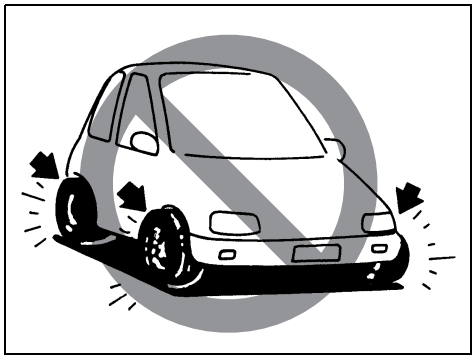

54G638S

⚠ WARNING

In addition to following the driving tips in this section, it is important to observe the following precautions.

- **Make sure your tires are in good condition and always maintain the specified tire pressure. Refer to "Tires" in the "INSPECTION AND MAINTENANCE" section for details.**
- **Do not use tires other than those specified by SUZUKI. Never use different sizes or types of tires on the front and rear wheels. For information regarding the specified tires, refer to the Tire Information Label located on the driver's side door pillar.**

(Continued)

Downloaded from www.Manualslib.com manuals search engine

Driving on Slippery Roads: NO

⚠ WARNING

(Continued)

- **Never use oversized tires or special shocks and springs to raise (jack up) your vehicle. This will change its handling characteristics. Oversized tires may also rub against the fender over bumps, causing vehicle damage or tire failure.**
- **After driving through water, test the brakes while driving at a slow speed to see if they have maintained their normal effectiveness. If the brakes are less effective than normal, dry them by repeatedly applying the brakes while driving slowly until the brakes have regained their normal effectiveness.**

Downloaded from www.Manualslib.com manuals search engine

MEMO

Downloaded from www.Manualslib.com manuals search engine

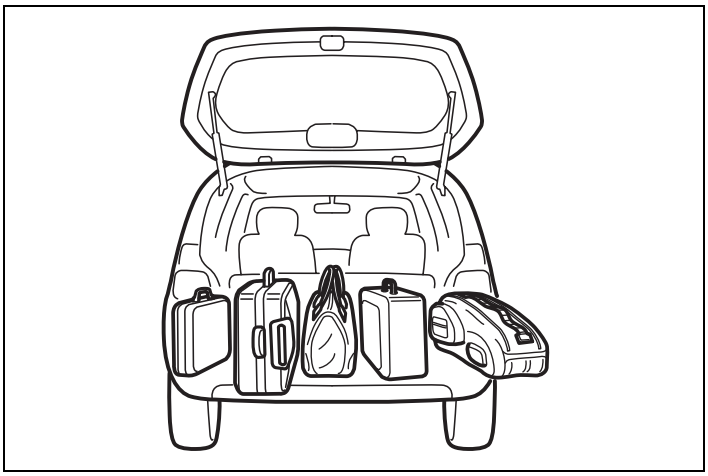

54G215

VEHICLE LOADING AND TOWING

Vehicle Loading 8-1
Trailer Towing 8-2
Towing Your Vehicle (recreational towing) 8-2

Downloaded from www.Manualslib.com manuals search engine

VEHICLE LOADING AND TOWING

Vehicle Loading

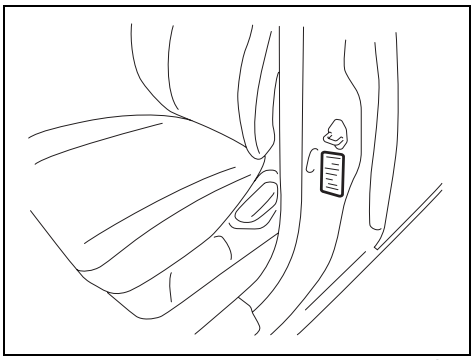

80JS025

Your vehicle was designed for specific weight capacities. The weight capacities of your vehicle are indicated by the Gross Vehicle Weight Rating (GVWR), the Gross Axle Weight Rating (GAWR, front and rear) and the Vehicle Capacity Weight. The GVWR and GAWR (front and rear) are listed on the Safety Certification Label which is located below the driver's side door latch striker. The Vehicle Capacity Weight is listed on the Tire Information Label which is located below the Safety Certification Label.

GVWR – Maximum permissible overall weight of the fully loaded vehicle (including all the occupants, accessories and cargo).
GAWR – (Front and Rear) Maximum permissible weight on an individual axle.

Vehicle Capacity Weight – Maximum permissible load weight a vehicle can carry including the weight of all the occupants, accessories and cargo.

The weight of any accessories already installed on your vehicle at the time of purchase, or that you or the dealer install after purchase, must be subtracted from the Vehicle Capacity Weight to determine how much capacity remains available for occupants and cargo. Contact your dealer for further information.

Actual weight of the loaded vehicle and actual loads at the front and rear axles can only be determined by weighing the vehicle using a vehicle scale. To measure the weight and load, try taking your vehicle to a highway weighing station, shipping company or inspection station for trucks, etc. Compare these weights to the GVWR and GAWR (front and rear) listed on the Safety Certification Label. If the gross vehicle weight or the load on either axle exceeds these ratings, you must remove enough weight to bring the load down to the rated capacity.

⚠ WARNING

Never overload your vehicle. The gross vehicle weight (sum of the weights of the loaded vehicle, driver and passengers) must never exceed the Gross Vehicle Weight Rating (GVWR) listed on the Safety Certification Label. In addition, never distribute a load so that the weight on either the front or rear axle exceeds the Gross Axle Weight Rating (GAWR) listed on the Safety Certification Label.

⚠ WARNING

- **Always distribute cargo evenly.**
- **To avoid personal injury or damage to your vehicle, always secure cargo to prevent it from shifting if the vehicle moves suddenly.**
- **Place heavier objects on the floor and as far forward in the trunk or in the cargo area as possible.**
- **Never pile cargo higher than the top of the seat backs.**

Downloaded from www.Manualslib.com manuals search engine

Trailer Towing: 5, 11, 13
Towing Your Vehicle (recreational towing): 13

Trailer Towing

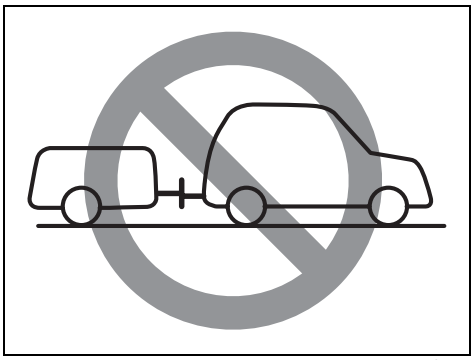

54G639

Do not use your vehicle to tow a trailer. The vehicle is not designed or intended for such use. Towing a trailer can adversely affect handling, durability and fuel economy.

Towing Your Vehicle (recreational towing)

Your vehicle may be towed behind another vehicle (such as a motorhome), provided you use the proper towing method specified for your vehicle. The towing method you must use depends on the specifications of your vehicle: whether it is a 2-wheel drive (2WD) or intelligent All Wheel Drive (i-AWD) vehicle.

Use the towing instruction table to select the proper towing method for your vehicle, and carefully follow the corresponding instructions. Be sure to use proper towing equipment designed for recreational towing and make sure that towing speed does not exceed 90 km/h (55 mph).

⚠ WARNING

Always use a safety chain when towing your vehicle and be sure to observe federal, state, and local requirements for trailer hitches, tow bars, lights, etc.

TOWING INSTRUCTION TABLE

DRIVE TRAIN	TRAN-SAXLE	TOWING METHOD
2WD	A/T (AUTO)	**A**
	M/T (MANUAL)	**A B**
i-AWD including 2WD mode	A/T	**none**
	M/T	**B**

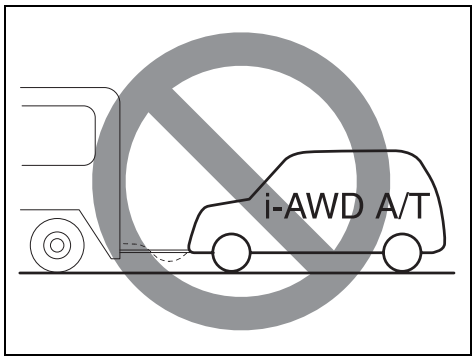

80J010

CAUTION

For the automatic transaxle of intelligent All Wheel Drive (i-AWD) models, don't tow your vehicle behind another vehicle such as a motorhome, or the drive train may be seriously damaged.

Downloaded from www.Manualslib.com manuals search engine

VEHICLE LOADING AND TOWING

TOWING METHOD A

FROM THE FRONT:
FRONT WHEELS ON A DOLLY
AND REAR WHEELS ON THE GROUND

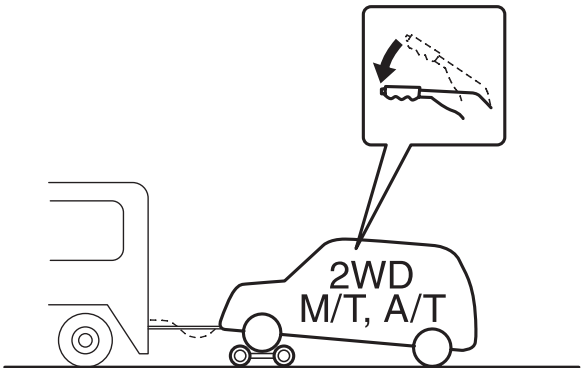

54G212

A: 2WD (except 2WD mode of i-AWD) VEHICLES WITH MANUAL TRANSAXLE OR AUTOMATIC TRANSAXLE

1) Secure the front wheels on a towing dolly according to the instructions provided by the dolly manufacturer.
2) Release the parking brake.

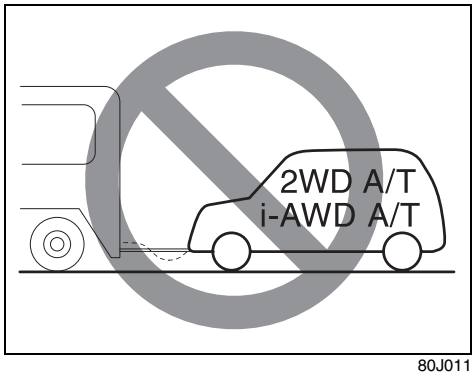

80J011

CAUTION

Towing the 2WD or i-AWD automatic transaxle vehicles with four wheels on the ground can result in damage to the automatic transaxle.

Downloaded from www.Manualslib.com manuals search engine

TOWING METHOD B

FROM THE FRONT:
FOUR WHEELS ON THE GROUND

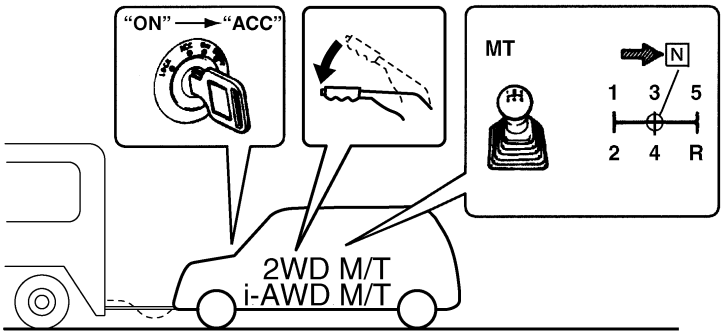

80J013

B: 2WD or i-AWD (including 2WD mode)
VEHICLES WITH MANUAL TRANSAXLE

1) Shift the manual transaxle lever into neutral.
2) Turn the ignition key to the "ACC" position to unlock the steering wheel.
3) Release the parking brake.

CAUTION

The steering column is not strong enough to withstand shocks transmitted from the front wheels during towing. Always unlock the steering wheel before towing.

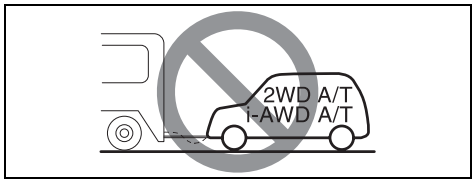

80J012

CAUTION

Towing the 2WD or i-AWD automatic transaxle vehicles with four wheels on the ground can result in damage to the automatic transaxle.

Downloaded from www.Manualslib.com manuals search engine

MEMO

Downloaded from www.Manualslib.com manuals search engine

INSPECTION AND MAINTENANCE

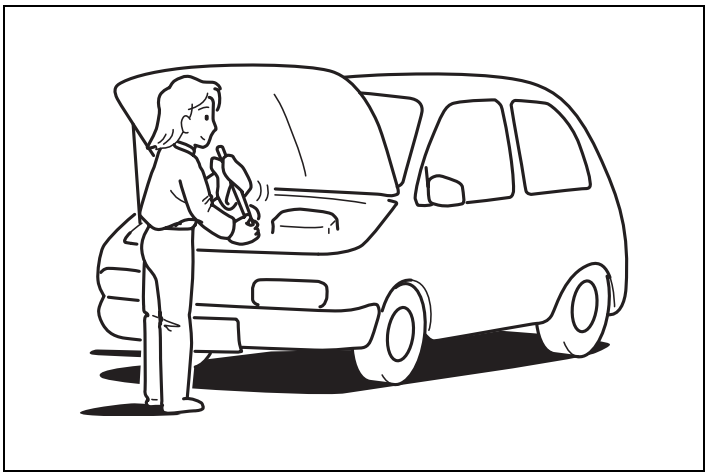

60G410

Maintenance Schedule 9-2
Periodic Maintenance Schedule 9-3
Maintenance Recommended under Severe Driving Conditions 9-7
Engine Oil and Filter 9-11
Gear Oil 9-14
Automatic Transaxle Fluid 9-16
Engine Coolant 9-17
Windshield Washer Fluid 9-19
Air Cleaner 9-19
Spark Plugs 9-20
Brakes 9-21
Steering Wheel 9-23
Clutch Pedal 9-24
Tires 9-24
Battery 9-35
Fuses 9-35
Headlight Aiming 9-39
Bulb Replacement 9-39
Wiper Blades 9-44
Air Conditioning System 9-48

Downloaded from www.Manualslib.com manuals search engine

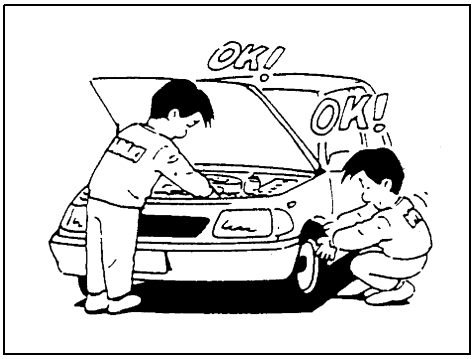

60A187S

⚠ WARNING

You should take extreme care when working on your vehicle to prevent accidental injury. Here are a few precautions that you should be especially careful to observe:

- **To prevent damage or unintended inflation of the air bag system, be sure the battery is disconnected and the ignition switch has been in the "LOCK" position for at least 90 seconds before performing any electrical service work on your SUZUKI. Do not touch air bag system components or wires. The wires are wrapped with yellow tape or yellow tubing, and the couplers are yellow for easy identification.**

(Continued)

⚠ WARNING

(Continued)

- **Do not leave the engine running in garages or other confined areas.**
- **When the engine is running, keep hands, clothing, tools and other objects away from the moving fan and drive belt.**
- **When it is necessary to do service work with the engine running, make sure that the parking brake is set fully and the transaxle is in Neutral (for manual transaxle vehicles) or Park (for automatic transaxle vehicles).**
- **Do not touch ignition wires or other ignition system parts when starting the engine or when the engine is running, or you could receive an electric shock.**
- **Be careful not to touch a hot engine, exhaust manifold and pipes, muffler, radiator and water hoses.**
- **Do not allow smoking, sparks or flames around gasoline or the battery. Flammable fumes are present.**
- **Do not get under your vehicle if it is supported only with the portable jack provided in your vehicle.**

(Continued)

⚠ WARNING

(Continued)

- **Be careful not to cause accidental short circuits between the positive and negative battery terminals.**
- **Keep used oil, engine coolant and other fluids away from children and pets. Dispose of used fluids properly; never pour them on the ground, into sewers, etc.**

Downloaded from www.Manualslib.com manuals search engine

Maintenance Schedule: 1, 2, 3, 4, 5, 6, 9, 10

NOTICE (for U.S.A.)
Maintenance, replacement or repair of the emission control devices and systems may be performed by any automobile repair establishment or individual using any part which has been certified under the provisions in the Clean Air Act sec. 207. (a) (2).

Maintenance Schedule

The following table shows the times when you should perform regular maintenance on your vehicle. This table shows in miles, kilometers and months when you should perform inspections, adjustments, lubrication and other services. These intervals should be shortened if driving is usually done under severe conditions (refer to "Maintenance Recommended Under Severe Driving Conditions").

⚠ WARNING

SUZUKI recommends that maintenance on items marked with an asterisk (*) be performed by your authorized SUZUKI dealer or a qualified service technician. If you are qualified, you may perform maintenance on the unmarked items by referring to the instructions in this section. If you are not sure whether you can successfully complete any of the unmarked maintenance jobs, ask your authorized SUZUKI dealer to do the maintenance for you.

CAUTION

Whenever it becomes necessary to replace parts on your vehicle, it is recommended that you use genuine SUZUKI replacement parts or their equivalent.

⚠ WARNING

The shock absorbers are filled with high pressure gas. Never attempt to disassemble it or throw it into a fire. Avoid storing it near a heater or heating device. When scrapping the absorber, the gas must be released from the absorber safely. Ask your dealer for assistance.

Downloaded from www.Manualslib.com manuals search engine

INSPECTION AND MAINTENANCE

Periodic Maintenance Schedule

R: Replace or change
I : Inspect, clean, adjust, lubricate or replace as necessary

Interval: This interval should be judged by odometer reading or months, whichever comes first.	miles (x 1000)	7.5	15	22.5	30	37.5	45	52.5	60	67.5	75
	km (x 1000)	12.5	25	37.5	50	62.5	75	87.5	100	112.5	125
	months	7.5	15	22.5	30	37.5	45	52.5	60	67.5	75
ENGINE & EMISSION CONTROL											
1. Drive belt											
*Tension check, *adjustment, *replacement		–	–	–	I	–	–	–	I	–	–
*2. Valve lash (clearance)		–	–	–	I	–	–	–	I	–	–
3. Engine oil and oil filter		R	R	R	R	R	R	R	R	R	R
*4. Cooling system hoses and connections		–	–	–	I	–	–	–	I	–	–
5. Engine coolant		–	–	–	R	–	–	–	R	–	–
*6. Exhaust pipes and mountings		–	–	–	I	–	–	–	I	–	–
*7. EVAP canister		Replace every 250000 km (150000 miles) or 180 months									
*8. Emission-related hoses & tubes		–	–	–	–	–	–	–	I	–	–
9. Spark plugs		–	–	–	–	–	–	–	R	–	–
*10. Ignition coil (plug cap)		–	–	–	I	–	–	–	I	–	–
*11. Fuel tank & cap		–	I	–	I	–	I	–	I	–	I
12. Air cleaner filter element (paved road)		–	–	–	R	–	–	–	R	–	–
*13. Fuel filter		–	–	–	–	–	–	–	–	–	–
*14. Fuel lines and connections		–	–	–	I	–	–	–	I	–	–
*15. Canister air suction filter		Replace every 250000 km (150000 miles) or 180 months									

Downloaded from www.Manualslib.com manuals search engine

Periodic Maintenance Schedule: 1, 2, 3, 4, 5, 6, 9, 10

R: Replace or change
I : Inspect, clean, adjust, lubricate or replace as necessary

Interval: This interval should be judged by odometer reading or months, whichever comes first.	miles (x 1000)	82.5	90	97.5	105	112.5	120	127.5	135	142.5	150
	km (x 1000)	137.5	150	162.5	175	187.5	200	212.5	225	237.5	250
	months	82.5	90	97.5	105	112.5	120	127.5	135	142.5	150
ENGINE & EMISSION CONTROL											
1. Drive belt											
*Tension check, *adjustment, *replacement		–	I	–	–	–	I	–	–	–	I
*2. Valve lash (clearance)		–	I	–	–	–	I	–	–	–	I
3. Engine oil and oil filter		R	R	R	R	R	R	R	R	R	R
*4. Cooling system hoses and connections		–	I	–	–	–	I	–	–	–	I
5. Engine coolant		–	R	–	–	–	R	–	–	–	R
*6. Exhaust pipes and mountings		–	I	–	–	–	I	–	–	–	I
*7. EVAP canister		Replace every 250000 km (150000 miles) or 180 months									
*8. Emission-related hoses & tubes		–	–	–	–	–	I	–	–	–	I
9. Spark plugs		–	–	–	–	–	R	–	–	–	–
*10. Ignition coil (plug cap)		–	I	–	–	–	I	–	–	–	I
*11. Fuel tank & cap		–	I	–	I	–	I	–	I	–	I (#1)
12. Air cleaner filter element (paved road)		–	R	–	–	–	R	–	–	–	R
*13. Fuel filter		–	–	–	–	–	–	–	–	–	R
*14. Fuel lines and connections		–	I	–	–	–	I	–	–	–	I (#1)
*15. Canister air suction filter		Replace every 250000 km (150000 miles) or 180 months									

#1: Inspect at 250000 km (150000 miles) or 180 months.

NOTE:
The maintenance services enclosed with rectangle are recommended maintenance items.

The U.S. Environmental Protection Agency or the California Air Resources Board has determined that the failure to perform recommended maintenance items enclosed with a rectangle will not nullify the emission warranty or limit recall liability prior to the completion of the vehicle's useful life. SUZUKI, however, urges that all recommended maintenance services be performed at the indicated intervals and the maintenance recorded.

Downloaded from www.Manualslib.com manuals search engine

Maintenance Recommended under Severe Driving Conditions: 1, 2, 3, 4, 5, 6, 9, 10

INSPECTION AND MAINTENANCE

R: Replace or change
I : Inspect, clean, adjust, lubricate or replace as necessary

Interval: This interval should be judged by odometer reading or months, whichever comes first.	miles (x 1000)	7.5	15	22.5	30	37.5	45	52.5	60	67.5	75
	km (x 1000)	12.5	25	37.5	50	62.5	75	87.5	100	112.5	125
	months	7.5	15	22.5	30	37.5	45	52.5	60	67.5	75
CHASSIS AND BODY											
1. Clutch (for manual transaxle)											
Pedal and fluid level		–	I	–	I	–	I	–	I	–	I
*2. Brake discs and pads	(front, rear)	I	–	I	–	I	–	I	–	I	–
Brake drums and shoes	(rear)	I	–	I	–	I	–	I	–	I	–
*3. Brake hoses and pipes		I	–	I	–	I	–	I	–	I	–
4. Brake fluid level check, *replacement		–	I	–	I	–	I	–	R	–	I
5. Brake pedal stroke check, *adjustment		–	I	–	I	–	I	–	I	–	I
6. Parking brake lever and *cable											
Lever movement check, *adjustment		I	–	I	–	I	–	I	–	I	–
7. Tires (including tire rotation)		I	I	I	I	I	I	I	I	I	I
8. Wheel discs		I	I	I	I	I	I	I	I	I	I
*9. Suspension system		I	I	I	I	I	I	I	I	I	I
*10. Propeller shafts (i-AWD)/Drive axle boots		I	I	I	I	I	I	I	I	I	I
*11. Manual transaxle oil											
Level check, *replacement		I	–	–	R	–	I	–	R	–	I
12. Automatic transaxle (A/T)	Fluid level	–	I	–	I	–	I	–	I	–	I
	*Fluid change	Replace every 175000 km (105000 miles)-----4-speed A/T									
	*Fluid hose	–	–	–	–	–	I	–	–	–	–
*13. Transfer oil (i-AWD)		I	–	–	I	–	I	–	R	–	I
*14. Rear differential oil (i-AWD)		R	–	–	I	–	I	–	I	–	I
15. Steering system											
Steering wheel movement,	*linkage	I	I	I	I	I	I	I	I	I	I
16. Power steering (if equipped)		I	I	I	I	I	I	I	I	I	I
17. All latches, hinges and locks		I	I	I	I	I	I	I	I	I	I
18. Air conditioner filter element (if equipped)		–	I	–	R	–	I	–	R	–	I

Downloaded from www.Manualslib.com manuals search engine

Maintenance Recommended under Severe Driving Conditions: 1, 2, 3, 4, 5, 6, 9, 10

R: Replace or change
I : Inspect, clean, adjust, lubricate or replace as necessary

Interval: This interval should be judged by odometer reading or months, whichever comes first.	miles (x 1000)	82.5	90	97.5	105	112.5	120	127.5	135	142.5	150
	km (x 1000)	137.5	150	162.5	175	187.5	200	212.5	225	237.5	250
	months	82.5	90	97.5	105	112.5	120	127.5	135	142.5	150
CHASSIS AND BODY											
1. Clutch (for manual transaxle)											
Pedal and fluid level		–	I	–	I	–	I	–	I	–	I
*2. Brake discs and pads	(front, rear)	I	–	I	–	I	–	I	–	I	–
Brake drums and shoes	(rear)	I	–	I	–	I	–	I	–	I	–
*3. Brake hoses and pipes		I	–	I	–	I	–	I	–	I	–
4. Brake fluid level check, *replacement		–	I	–	I	–	R	–	I	–	I
5. Brake pedal stroke check, *adjustment		–	I	–	I	–	I	–	I	–	I
6. Parking brake lever and *cable											
Lever movement check, *adjustment		I	–	I	–	I	–	I	–	I	–
7. Tires (including tire rotation)		I	I	I	I	I	I	I	I	I	I
8. Wheel discs		I	I	I	I	I	I	I	I	I	I
*9. Suspension system		I	I	I	I	I	I	I	I	I	I
*10. Propeller shafts (i-AWD)/Drive axle boots		I	I	I	I	I	I	I	I	I	I
*11. Manual transaxle oil											
Level check, *replacement		–	R	–	I	–	R	–	I	–	R
12. Automatic transaxle (A/T)	Fluid level	–	I	–	I	–	I	–	I	–	I
	*Fluid change	Replace every 175000 km (105000 miles)-----4-speed A/T									
	*Fluid hose	–	I	–	–	–	–	–	I	–	–
*13. Transfer oil (i-AWD)		–	I	–	I	–	R	–	I	–	I
*14. Rear differential oil (i-AWD)		–	I	–	I	–	I	–	I	–	I
15. Steering system											
Steering wheel movement,	*linkage	I	I	I	I	I	I	I	I	I	I
16. Power steering (if equipped)		I	I	I	I	I	I	I	I	I	I
17. All latches, hinges and locks		I	I	I	I	I	I	I	I	I	I
18. Air conditioner filter element (if equipped)		–	R	–	I	–	R	–	I	–	R

NOTE:
This table shows the service schedule up to 250000 km (150000 miles).
Beyond 250000 km (150000 miles), perform the same services at the same intervals shown in the chart.
Beyond 250000 km (150000 miles), the maintenance services enclosed with a rectangle are required.

Downloaded from www.Manualslib.com manuals search engine

INSPECTION AND MAINTENANCE

Maintenance Recommended under Severe Driving Conditions

Follow this schedule if your car is mainly operated under one or more of the following conditions:

- When most trips are less than 6 kilometers (4 miles)
- When most trips are less than 16 kilometers (10 miles) and outside temperature remain below freezing.
- Idling and/or low-speed operation in stop-and-go traffic.
- Operating in dusty areas.

Schedule should also be followed if the car is used for delivery service, police, taxi or other commercial applications.

R: Replace or change
I : Inspect, clean, adjust, lubricate or replace as necessary

Interval: This interval should be judged by odometer reading or months, whichever comes first.	miles (x 1000)	3	6	9	12	15	18	21	24	27	30	33	36	39
	km (x 1000)	5	10	15	20	25	30	35	40	45	50	55	60	65
	months	3	6	9	12	15	18	21	24	27	30	33	36	39
ENGINE & EMISSION CONTROL														
1. Drive belt														
*Tension check, *adjustment, *replacement		–	–	–	–	–	–	–	–	–	I	–	–	–
*2. Valve lash (clearance)		–	–	–	–	–	–	–	–	–	I	–	–	–
3. Engine oil and oil filter		R	R	R	R	R	R	R	R	R	R	R	R	R
*4. Cooling system hoses and connections		–	–	–	–	I	–	–	–	–	I	–	–	–
5. Engine coolant		–	–	–	–	–	–	–	–	–	R	–	–	–
*6. Exhaust pipes and mountings		–	–	–	–	I	–	–	–	–	I	–	–	–
*7. EVAP canister		Replace every 250000 km (150000 miles) or 180 months												
*8. Emission-related hoses & tubes		–	–	–	–	–	–	–	–	–	–	–	–	–
9. Spark plugs		–	–	–	–	–	–	–	–	–	–	–	–	–
*10. Ignition coil (plug cap)		–	–	–	–	–	–	–	–	–	I	–	–	–
*11. Fuel tank & cap		–	–	–	–	I	–	–	–	–	I	–	–	–
12. Air cleaner filter element (paved road)		I	I	I	I	I	I	I	I	I	R	I	I	I
*13. Fuel filter		Replace every 250000 km (150000 miles) or 150 months												
*14. Fuel lines and connections		–	–	–	–	I	–	–	–	–	I	–	–	–
*15. Canister air suction filter		–	–	–	–	–	–	–	–	–	–	–	–	–

Downloaded from www.Manualslib.com manuals search engine

Engine Oil and Filter: 1, 2

R: Replace or change
I : Inspect, clean, adjust, lubricate or replace as necessary

Interval: This interval should be judged by odometer reading or months, whichever comes first.	miles (x 1000)	42	45	48	51	54	57	60	63	66	69	72	75
	km (x 1000)	70	75	80	85	90	95	100	105	110	115	120	125
	months	42	45	48	51	54	57	60	63	66	69	72	75
ENGINE & EMISSION CONTROL													
1. Drive belt													
*Tension check, *adjustment, *replacement		–	–	–	–	–	–	I	–	–	–	–	–
*2. Valve lash (clearance)		–	–	–	–	–	–	I	–	–	–	–	–
3. Engine oil and oil filter		R	R	R	R	R	R	R	R	R	R	R	R
*4. Cooling system hoses and connections		–	I	–	–	–	–	I	–	–	–	–	I
5. Engine coolant		–	–	–	–	–	–	R	–	–	–	–	–
*6. Exhaust pipes and mountings		–	I	–	–	–	–	I	–	–	–	–	I
*7. EVAP canister		Replace every 250000 km (150000 miles) or 180 months											
*8. Emission-related hoses & tubes		–	–	–	–	–	–	I	–	–	–	–	–
9. Spark plugs		–	–	–	–	–	–	R	–	–	–	–	–
*10. Ignition coil (plug cap)		–	–	–	–	–	–	I	–	–	–	–	–
*11. Fuel tank & cap		–	I	–	–	–	–	I	–	–	–	–	I
12. Air cleaner filter element (paved road)		I	I	I	I	I	I	R	I	I	I	I	I
*13. Fuel filter		Replace every 250000 km (150000 miles) or 150 months											
*14. Fuel lines and connections		–	I	–	–	–	–	I	–	–	–	–	I
*15. Canister air suction filter		–	–	–	–	–	–	–	–	–	–	–	R

Downloaded from www.Manualslib.com manuals search engine

INSPECTION AND MAINTENANCE

R: Replace or change
I : Inspect, clean, adjust, lubricate or replace as necessary

Interval: This interval should be judged by odometer reading or months, whichever comes first.	miles (x 1000)	3	6	9	12	15	18	21	24	27	30	33	36	39
	km (x 1000)	5	10	15	20	25	30	35	40	45	50	55	60	65
	months	3	6	9	12	15	18	21	24	27	30	33	36	39
CHASSIS AND BODY														
1. Clutch (for manual transaxle)														
Pedal and fluid level		–	–	–	–	I	–	–	–	–	I	–	–	–
*2. Brake discs and pads	(front, rear)	–	I	–	I	–	–	–	I	–	–	–	I	–
Brake drums and shoes	(rear)	–	I	–	I	–	–	–	I	–	–	–	I	–
*3. Brake hoses and pipes		–	I	–	I	–	–	–	I	–	–	–	I	–
4. Brake fluid level check, *replacement		–	–	–	–	I	–	–	–	–	I	–	–	–
5. Brake pedal stroke check, *adjustment		–	–	–	–	I	–	–	–	–	I	–	–	–
6. Parking brake lever and *cable														
Lever movement check, *adjustment		–	I	–	–	I	–	–	–	–	I	–	–	–
7. Tires (including tire rotation)		–	I	–	I	–	I	–	I	–	I	–	I	–
8. Wheel discs		–	I	–	I	–	I	–	I	–	I	–	I	–
*9. Wheel bearings		–	–	–	I	–	–	–	I	–	–	–	I	–
*10. Suspension system		–	I	–	I	–	I	–	I	–	I	–	I	–
*11. Propeller shafts (i-AWD)/Drive axle boots		–	I	–	I	–	I	–	I	–	I	–	I	–
*12. Manual transaxle oil														
Level check, *replacement		–	–	–	–	R	–	–	–	–	R	–	–	–
13. Automatic transaxle (A/T)	Fluid level	–	–	–	–	I	–	–	–	–	I	–	–	–
	*Fluid change	Replace every 80000 km (48000 miles)-----4-speed A/T												
	*Fluid hose	–	–	–	–	–	–	–	–	–	–	–	–	–
*14. Transfer oil (i-AWD)		–	–	–	–	R	–	–	–	–	R	–	–	–
*15. Rear differential oil (i-AWD)		–	–	–	–	R	–	–	–	–	R	–	–	–
16. Steering system														
Steering wheel movement,	*linkage	–	I	–	I	–	I	–	I	–	I	–	I	–
17. Power steering (if equipped)		–	I	–	I	–	I	–	I	–	I	–	I	–
18. All latches, hinges and locks		–	I	–	I	–	I	–	I	–	I	–	I	–
19. Air conditioner filter element (if equipped)*1		–	I	–	I	–	I	–	I	–	R	–	I	–

Downloaded from www.Manualslib.com manuals search engine

Engine Oil and Filter: 1, 2
Gear Oil: 6, 10

R: Replace or change
I : Inspect, clean, adjust, lubricate or replace as necessary

Interval: This interval should be judged by odometer reading or months, whichever comes first.	miles (x 1000)	42	45	48	51	54	57	60	63	66	69	72	75
	km (x 1000)	70	75	80	85	90	95	100	105	110	115	120	125
	months	42	45	48	51	54	57	60	63	66	69	72	75
CHASSIS AND BODY													
1. Clutch (for manual transaxle)													
Pedal and fluid level		–	I	–	–	–	–	I	–	–	–	–	I
*2. Brake discs and pads	(front, rear)	–	–	I	–	–	–	I	–	–	–	I	–
Brake drums and shoes	(rear)	–	–	I	–	–	–	I	–	–	–	I	–
*3. Brake hoses and pipes		–	–	I	–	–	–	I	–	–	–	I	–
4. Brake fluid level check, *replacement		–	I	–	–	–	–	R	–	–	–	–	I
5. Brake pedal stroke check, *adjustment		–	I	–	–	–	–	I	–	–	–	–	I
6. Parking brake lever and *cable													
Lever movement check, *adjustment		–	I	–	–	–	–	I	–	–	–	–	I
7. Tires (including tire rotation)		I	–	I	–	I	–	I	–	I	–	I	–
8. Wheel discs		I	–	I	–	I	–	I	–	I	–	I	–
*9. Wheel bearings		–	–	I	–	–	–	I	–	–	–	I	–
*10. Suspension system		I	–	I	–	I	–	I	–	I	–	I	–
*11. Propeller shafts (i-AWD)/Drive axle boots		I	–	I	–	I	–	I	–	I	–	I	–
*12. Manual transaxle oil													
Level check, *replacement		–	R	–	–	–	–	R	–	–	–	–	R
13. Automatic transaxle (A/T)	Fluid level	–	I	–	–	–	–	I	–	–	–	–	I
	*Fluid change	Replace every 80000 km (48000 miles)-----4-speed A/T											
	*Fluid hose	–	I	–	–	–	–	–	–	–	–	–	–
*14. Transfer oil (i-AWD)		–	R	–	–	–	–	R	–	–	–	–	R
*15. Rear differential oil (i-AWD)		–	R	–	–	–	–	R	–	–	–	–	R
16. Steering system													
Steering wheel movement,	*linkage	I	–	I	–	I	–	I	–	I	–	I	–
17. Power steering (if equipped)		I	–	I	–	I	–	I	–	I	–	I	–
18. All latches, hinges and locks		I	–	I	–	I	–	I	–	I	–	I	–
19. Air conditioner filter element (if equipped)*1		I	–	I	–	I	–	R	–	I	–	I	–

NOTE:
This table shows the service schedule up to 125000 km (75000 miles).
Beyond 125000 km (75000 miles), perform the same services at the same intervals shown in the chart.
**1 Clean more frequently if the air flow from the air conditioner decreases.*

Downloaded from www.Manualslib.com manuals search engine

Engine Oil and Filter

Specified Oil

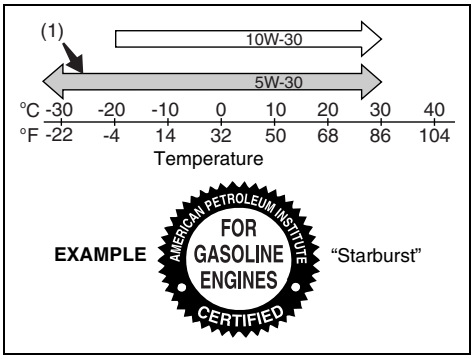

52D083

(1) Preferred

Use engine oil with the American Petroleum Institute Certified For Gasoline Engines "Starburst" symbol.

Select the appropriate oil viscosity according to the above chart.

We highly recommend you use SAE 5W-30 oil.

CAUTION
Failure to use the recommended oil can result in engine damage.

Oil Level Check

Engine oil dipstick

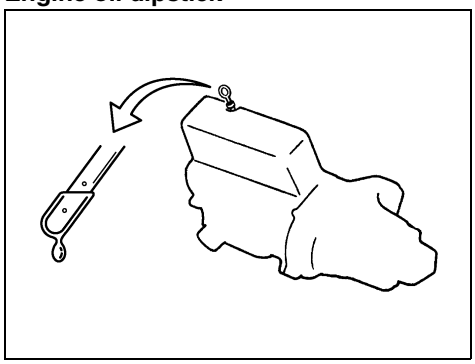

80G064

It is important to keep the engine oil at the correct level for proper lubrication of your vehicle's engine. Check the oil level with the vehicle on a level surface. The oil level indication may be inaccurate if the vehicle is on a slope. The oil level should be checked either before starting the engine or at least 5 minutes after stopping the engine.

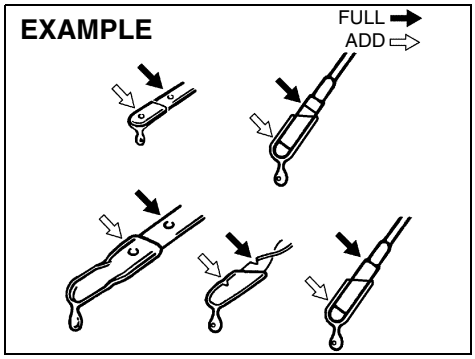

52D084

The handle of the engine oil dipstick is colored yellow for easy identification.

Pull out the oil dipstick, wipe oil off with a clean cloth, insert the dipstick all the way into the engine, then remove it again. The oil on the stick should be between the upper and lower limits shown on the stick.

If the oil level indication is near the lower limit, add enough oil to raise the level to the upper limit.

Downloaded from www.Manualslib.com manuals search engine

Refilling

EXAMPLE

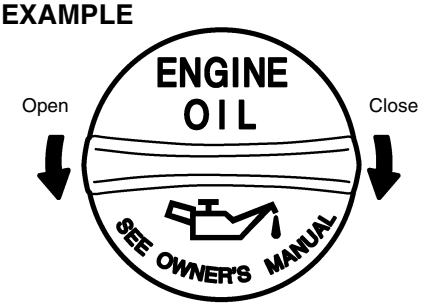

81A147

Remove the oil filler cap and pour oil slowly through the filler hole to bring the oil level to the upper limit on the dipstick. Be careful not to overfill. Too much oil is almost as bad as too little oil. After refilling, start the engine and allow it to idle for about a minute. Stop the engine, wait about 5 minutes and check the oil level again.

Changing Engine Oil and Filter

EXAMPLE

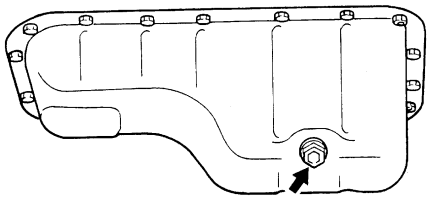

60G306

Drain the engine oil while the engine is still warm.

1) Remove the oil filler cap.
2) Place a drain pan under the drain plug.
3) Using a wrench, remove the drain plug and drain out the engine oil.

⚠ WARNING

The engine oil temperature may be high enough to burn your fingers when the drain plug is loosened. Wait until the drain plug is cool enough to touch with your bare hands.

⚠ WARNING

New and used oil and solvent can be hazardous. Children and pets may be harmed by swallowing new or used oil or solvent. Repeated, prolonged contact with used engine oil may cause [skin] cancer. Brief contact with used oil or solvent may irritate skin.

- **Keep new and used oil and solvent away from children and pets.**
- **Wear a long-sleeve shirt and waterproof gloves.**
- **Wash with soap if oil or solvent contacts your skin.**

4) Reinstall the drain plug and gasket. Tighten the plug with a wrench to the specified torque.

Tightening torque specification
35 Nm (25.3 lb-ft, 3.5 kg-m)

Downloaded from www.Manualslib.com manuals search engine

INSPECTION AND MAINTENANCE

Replace the Oil Filter

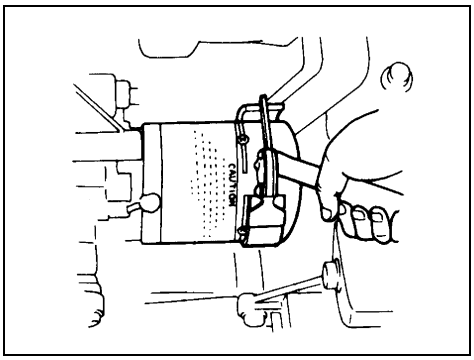

60A198

1) Remove the engine under cover.
2) Using an oil filter wrench, turn the oil filter counterclockwise and remove it.
3) Using a clean rag, wipe off the mounting surface on the engine where the new filter will be seated.
4) Smear a little engine oil around the rubber gasket of the new oil filter.
5) Screw on the new filter by hand until the filter gasket contacts the mounting surface.

CAUTION

To tighten the oil filter properly, it is important to accurately identify the position at which the filter gasket first contacts the mounting surface.

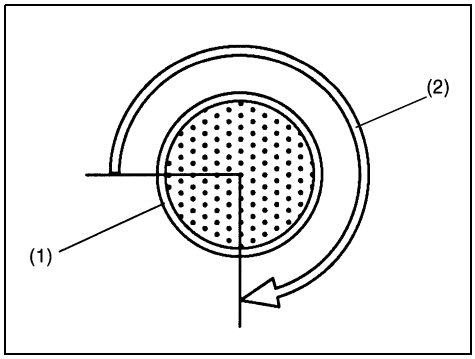

54G093

(1) Oil filter
(2) 3/4 turn

6) Tighten the filter 3/4 turn from the point of contact with the mounting surface (or to the specified torque) using an oil filter wrench.

Tightening torque specification
14 Nm (10.0 lb-ft, 1.4 kg-m)

CAUTION

To prevent oil leakage, make sure that the oil filter is tight, but do not overtighten it.

Refill with Oil and Check for Leaks

1) Pour oil through the filler hole and install the filler cap.
   For the approximate capacity of the oil, refer to the “Capacities” item in the “SPECIFICATIONS” section.
2) Start the engine and look carefully for leaks at the oil filter and drain plug. Run the engine at various speeds for at least 5 minutes.
3) Stop the engine and wait about 5 minutes. Check the oil level again and add oil if necessary. Check for leaks again.

CAUTION

When replacing the oil filter, it is recommended that you use a genuine SUZUKI replacement filter. If you use an after-market filter, make sure it is of equivalent quality and carefully follow the manufacturer’s instructions and precautions.

Downloaded from www.Manualslib.com manuals search engine

Engine Coolant: 1, 2

EXAMPLE

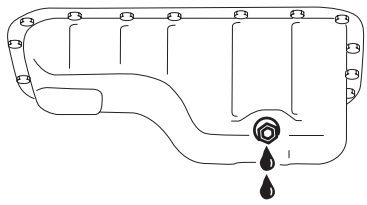

80J014

CAUTION

Oil leaks from around the oil filter or drain plug indicate incorrect installation or gasket damage. If you find any leaks or are not sure that the filter has been properly tightened, have the vehicle inspected by your SUZUKI dealer.

Gear Oil

Specified Gear Oil

Manual transaxle (API GL-4)

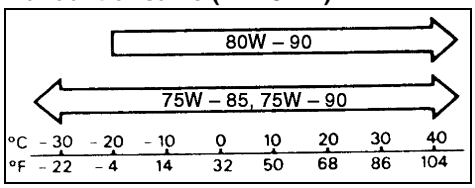

54G095

Rear differential oil (i-AWD)/Transfer oil of automatic transaxle model (i-AWD) (API GL-5 Hypoid)

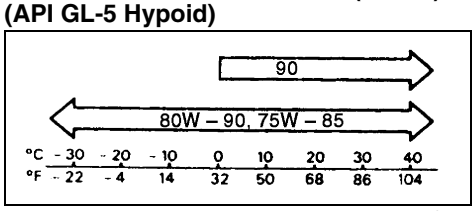

54G096

When replacing gear oil, use the appropriate viscosity and grade as shown in the charts below.
We highly recommend you use:
API GL-4 SAE 75W-90 for manual transaxle gear oil
API GL-5 hypoid gear oil SAE 80W-90 for rear differential oil (i-AWD) and transfer oil of automatic transaxle model (i-AWD)

	API GRADE
Manual transaxle	GL-4
Rear differential oil (i-AWD)/Transfer oil (i-AWD A/T)	GL-5 (Hypoid gear oil)

Downloaded from www.Manualslib.com manuals search engine

Engine Coolant: 1, 2
Windshield Washer Fluid: 3

INSPECTION AND MAINTENANCE

Manual transaxle

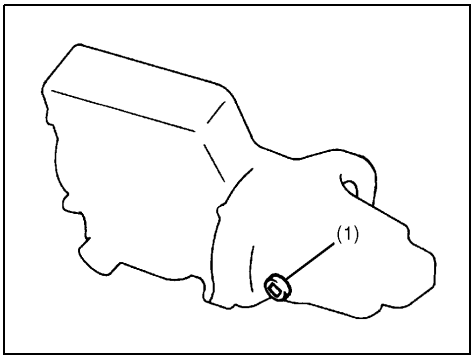

54G097

Transfer case (i-AWD)

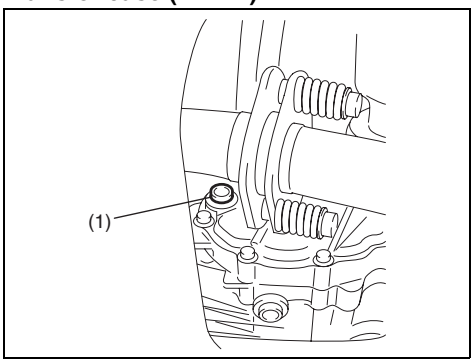

80J007

(1) Oil filler and level plug

Rear differential (i-AWD)

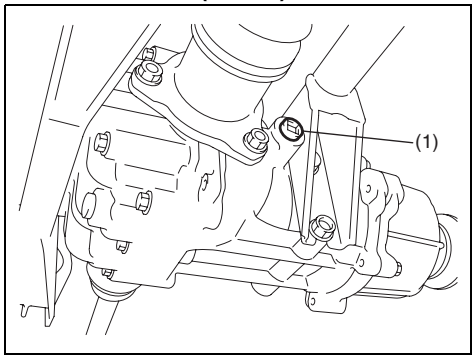

80J015

(1) Oil filler and level plug

Tightening torque

	Oil Filler Plug
Manual transaxle	21 Nm (15.2 lb-ft) (2.1 kg-m)
Transfer	23 Nm (16.6 lb-ft) (2.3 kg-m)
Rear differential	

Gear Oil Level Check

The manual transaxle, transfer gears (i-AWD A/T) and rear differential (i-AWD) are lubricated with gear oil. To check the gear oil level in any of the above locations, use the following procedure:

1) Park the vehicle on a level surface. Set parking brake and stop the engine.
2) Remove the oil filler plug (1).
3) Check the inside of the hole with your finger. If the oil level comes up to the bottom of the plug hole, the oil level is correct. If so, reinstall the plug.
4) If the oil level is low, add gear oil through the filler plug hole (1) until the oil level reaches the bottom of the filler hole.

Gear Oil Replacement

Since special procedures, materials and tools are required to change the automatic transaxle oil, it is recommended that you trust this job to your authorized SUZUKI dealer.

Downloaded from www.Manualslib.com manuals search engine

Windshield Washer Fluid: 3
Air Cleaner: 1, 2

Automatic Transaxle Fluid

Specified Fluid

Use an automatic transaxle fluid equivalent to DEXRON®-III.

Fluid Level Check

CAUTION

Driving with too much or too little fluid can damage the transaxle.

You must check the fluid level with the automatic transaxle fluid at normal operating temperature.

To check the fluid level:

1) To warm up the transaxle fluid, drive the vehicle or idle the engine until the temperature gauge indicates normal operating temperature.
2) Then drive for ten more minutes.

NOTE:
Do not check the fluid level if you have just driven the vehicle for a long time at high speed, or if you have driven in city traffic in hot weather. Wait until the fluid cools down (about 30 minutes), or the fluid level indication will not be correct.

3) Park your vehicle on level ground.
4) Apply the parking brake and then start the engine in "P" (Park). Let it idle for two minutes and keep it running during the fluid level check.
5) With your foot on the brake pedal, move the gearshift lever through each gear, pausing for about three seconds in each range. Then move it back to the "P" (Park) position.

⚠ WARNING

Be sure to depress the brake pedal when moving the gearshift lever, or the vehicle can move suddenly.

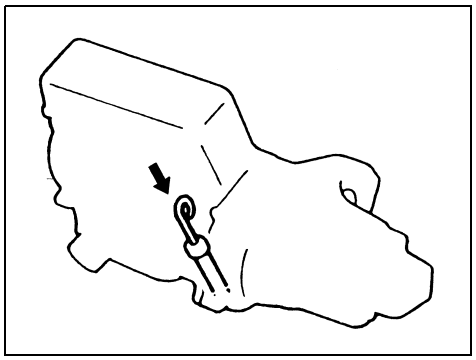

75F086

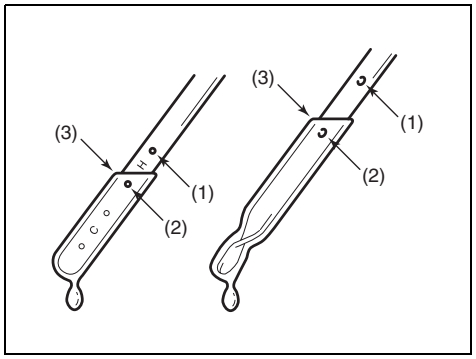

54G317

(1) FULL
(2) LOW
(3) The lowest point = Fluid level

6) The handle of the A/T fluid dipstick is colored red for easy identification.
   Remove the dipstick, clean it and push it back in until the cap seats. Pull out the dipstick and read the fluid level.
   The fluid level should be between the two marks in the "HOT" range on the dipstick.
7) Add just enough specified fluid through the dipstick hole to fill the transaxle to the proper level. It takes only 0.4 liters (0.85 US pt) for 4-speed automatic transaxle to raise the level from "LOW" to "FULL".

Downloaded from www.Manualslib.com manuals search engine

CAUTION

After checking or adding oil, be sure to insert the dipstick securely.

Changing Oil

Since special procedures, materials and tools are required to change the automatic transaxle oil, it is recommended that you trust this job to your authorized SUZUKI dealer.

Engine Coolant

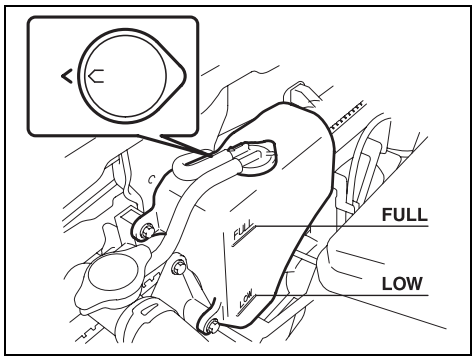

56KN049

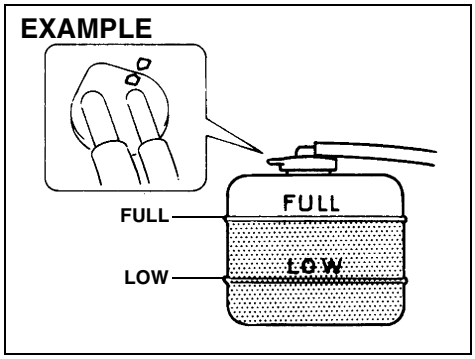

60A208

Selection of Coolant

To maintain optimum performance and durability of your engine, use SUZUKI Genuine Coolant or equivalent.

This type of coolant is best for your cooling system as it:

- Helps maintain proper engine temperature.
- Gives proper protection against freezing and boiling.
- Gives proper protection against corrosion and rust.

Failure to use the proper coolant can damage your cooling system. Your authorized SUZUKI dealer can help you select the proper coolant.

CAUTION

To avoid damaging your cooling system:

- **Always use a high quality ethylene glycol base phosphate type coolant diluted with distilled water at the correct mixture concentration.**
- **Make sure that the proper mix is 50/50 coolant to distilled water and in no case higher than 70/30. Concentrations greater than 70/30 coolant to distilled water will cause overheating conditions.**
- **Do not use straight coolant nor plain water.**

(Continued)

Downloaded from www.Manualslib.com manuals search engine

CAUTION

(Continued)
- **Do not add extra inhibitors or additives. They may not be compatible with your cooling system.**
- **Do not mix different types of base coolants. Doing so may result in accelerated seal wear and/or the possibility of severe overheating and extensive engine/automatic transaxle damage.**

Coolant Level Check

Check the engine coolant level at the reserve tank, not at the radiator. With the engine cool, the engine coolant level should be between the “FULL” and “LOW” marks.

Adding Coolant

If the engine coolant level is below the “LOW” mark, more engine coolant should be added. Remove the reserve tank cap and add engine coolant until the reserve tank level reaches the “FULL” mark. Never fill the reserve tank above the “FULL” mark.

CAUTION

- **The mixture you use should contain 50% concentration of antifreeze.**
- **If the lowest ambient temperature in your area is expected to be –35°C (–31°F) or below, use higher concentrations up to 60% following the instructions on the antifreeze container.**
- **When putting the cap on the reservoir tank, line up the arrow on the cap and the arrow on the tank. Failure to follow this can result in coolant leakage.**

⚠ WARNING

Engine coolant is harmful or fatal if swallowed or inhaled. Do not drink antifreeze or coolant solution. If swallowed, do not induce vomiting. Immediately contact a poison control center or a physician. Avoid inhaling mist or hot vapors; if inhaled, remove to fresh air. If coolant gets in eyes, flush eyes with water and seek medical attention. Wash thoroughly after handling. Solution can be poisonous to animals. Keep out of the reach of children and animals.

Coolant Replacement

Since special procedures are required, we recommend you take your vehicle to your SUZUKI dealer for coolant replacement.

Downloaded from www.Manualslib.com manuals search engine

INSPECTION AND MAINTENANCE

Windshield Washer Fluid

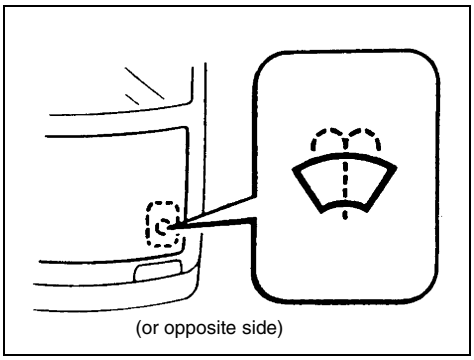

65D108

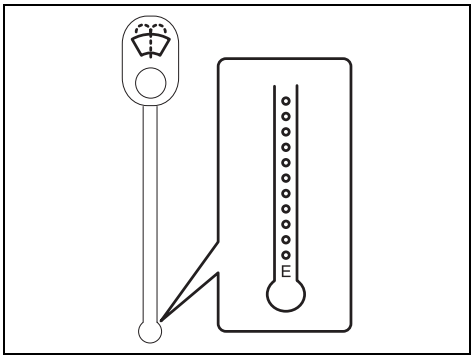

80J008

Check that there is washer fluid in the tank by looking at the washer fluid level gauge which is attached to the cap of the washer fluid tank. If the fluid level is near "E" mark, refill it.

⚠ WARNING

Do not use "anti-freeze" solution in the windshield washer reservoir. This can severely impair visibility when sprayed on the windshield, and also damage your vehicle's paint.

CAUTION

Damage may result if the washer motor is operated with no fluid in the washer tank.

Use a good quality windshield washer fluid, diluted with water as necessary.

Air Cleaner

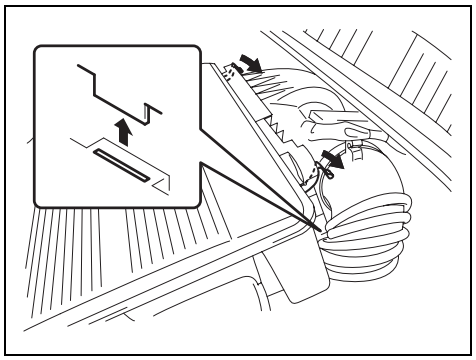

80J003

If the air cleaner is clogged with dust, there will be greater intake resistance, resulting in decreased power output and increased fuel consumption.

Unclamp the side clamps, and remove the element from the air cleaner case. If it appears to be dirty, replace it with a new one.

CAUTION

The air cleaner element should be replaced every 50000 km (30000 miles). More frequent replacement is necessary when you drive under dusty conditions.

Downloaded from www.Manualslib.com manuals search engine

Brakes: 6
Steering Wheel: 6

Spark Plugs

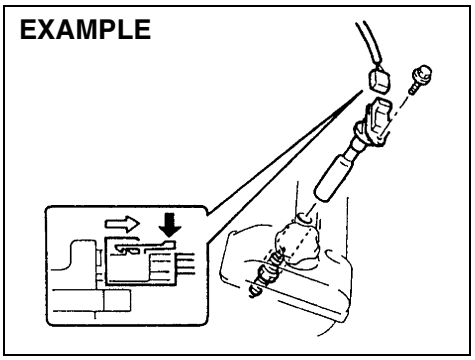

65D180

You should inspect spark plugs periodically for carbon deposits. When carbon accumulates on a spark plug, a strong spark may not be produced. Remove carbon deposits with a wire or pin and adjust the spark plug gap.

To access the spark plugs,
1) disconnect the coupler while pushing the release lever,
2) remove the bolt, and
3) pull the ignition coil out.

CAUTION

- **When servicing the iridium/platinum spark plugs (slender center electrode type plugs), do not touch the center electrode, as it is easy to damage.**
- **When installing the spark plugs, screw them in with your fingers to avoid stripping the threads. Tighten with a torque wrench to 25 Nm (2.5 kg-m, 18.0 lb-ft). Do not allow contaminants to enter the engine through the spark plug holes when the plugs are removed.**
- **Never use spark plugs with the wrong thread size.**

CAUTION

When replacing spark plugs, you should use the brand and type specified for your vehicle. For the specified plugs, refer to the "SPECIFICATIONS" section at the end of this book. If you wish to use a brand of spark plug other than the specified plugs, consult your SUZUKI dealer.

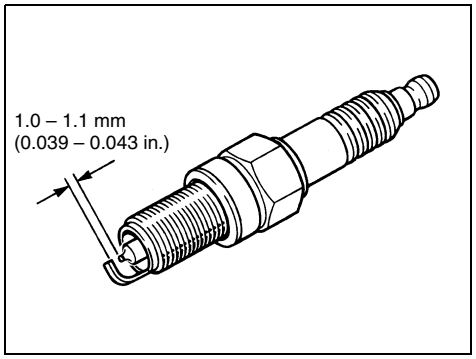

80G093

Downloaded from www.Manualslib.com manuals search engine

Clutch Pedal: 6
Tires: 6

Brakes

Brake Fluid

EXAMPLE

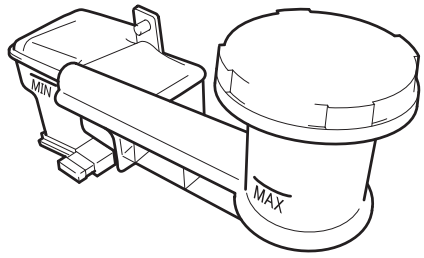

80J004

Check the brake fluid level by looking at the reservoir in the engine compartment. Check that the fluid level is between the "MAX" and "MIN" lines. If the brake fluid level is near the "MIN" line, fill it up to the "MAX" line with DOT3 brake fluid.

BRAKE or

80J104

⚠ WARNING

Failure to follow the guidelines below can result in personal injury or serious damage to the brake system.

- **If the brake fluid in the reservoir drops below a certain level, the brake warning light on the instrument panel will come on (the engine must be running with the parking brake fully disengaged.) Should the light come on, immediately ask your SUZUKI dealer to inspect the brake system.**
- **A rapid fluid loss indicates a leak in the brake system which should be inspected by your SUZUKI dealer immediately.**
- **Brake fluid can harm your eyes and damage painted surfaces. Use caution when refilling the reservoir.**

(Continued)

⚠ WARNING

(Continued)

- **Do not use any fluid other than DOT3 brake fluid. Do not use reclaimed fluid or fluid that has been stored in old or open containers. It is essential that foreign particles and other liquids are kept out of the brake fluid reservoir.**

⚠ WARNING

Brake fluid is harmful or fatal if swallowed, and harmful if it comes in contact with skin or eyes. If swallowed, do not induce vomiting. Immediately contact a poison control center or a physician. If brake fluid gets in eyes, flush eyes with water and seek medical attention. Wash thoroughly after handling. Solution can be poisonous to animals. Keep out of the reach of children and animals.

CAUTION

The brake fluid should be replaced according to the maintenance schedule. Have the brake fluid replaced by your SUZUKI dealer.

Downloaded from www.Manualslib.com manuals search engine

NOTE:
With disc brakes, the fluid level can be expected to gradually fall as the brake pads wear.

Brake Pedal

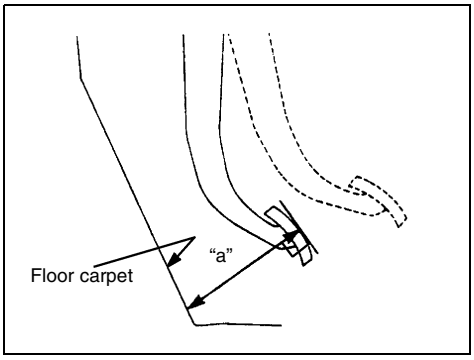

65D345

Pedal to floor carpet minimum distance "a"
40 mm (1.6 in.)

With the engine running and the parking brake set, measure the distance between the brake pedal and floor carpet when the pedal is depressed with approximately 300 N (66 lbs, 30 kg) of force. The minimum distance required is as specified. Since your vehicle's brake system is self-adjusting, there is no need for pedal adjustment. If the pedal to floor carpet distance as measured above is less than the minimum distance required, have your vehicle inspected by your SUZUKI dealer.

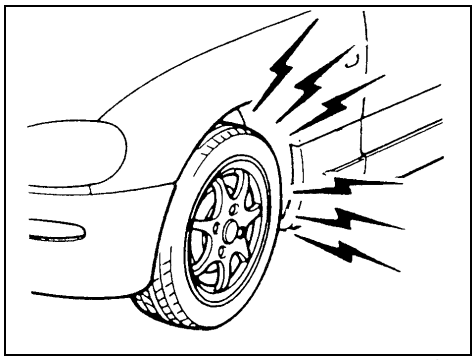

60G104

NOTE:
When measuring the distance between the brake pedal and floor wall, be sure not to include the floor mat or rubber on the floor wall in your measurement.

⚠ WARNING

If you experience any of the following problems with your vehicle's brake system, have the vehicle inspected immediately by your SUZUKI dealer.
- **Poor braking performance**
- **Uneven braking (Brakes not working uniformly on all wheels.)**
- **Excessive pedal travel**
- **Brake dragging**
- **Excessive noise**
- **(Except ABS equipped vehicle) Pedal pulsation (Pedal pulsates when pressed for braking.)**

Downloaded from www.Manualslib.com manuals search engine

INSPECTION AND MAINTENANCE

Parking Brake Lever

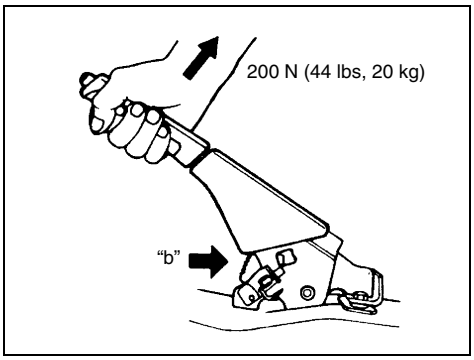

60A226

Ratchet tooth specification "b"
4th – 9th

Check the parking brake for proper adjustment by counting the number of clicks made by the ratchet teeth as you slowly pull up on the parking brake lever to the point of full engagement. The parking brake lever should stop between the specified ratchet teeth and the rear wheels should be securely locked. If the parking brake is not properly adjusted or the brakes drag after the lever has been fully released, have the parking brake inspected and/or adjusted by your SUZUKI dealer.

Steering Wheel

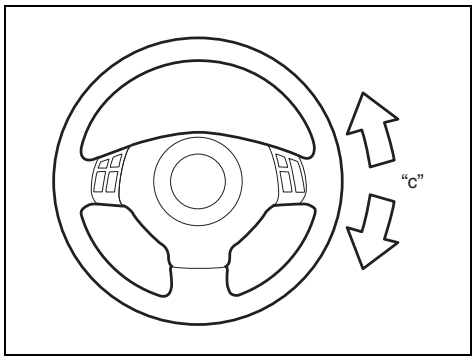

80J005

Steering wheel play "c"
0 – 30 mm (0.0 – 1.2 in.)

Check the play of the steering wheel by gently turning it from left to right and measuring the distance that it moves before you feel slight resistance. The play should be between the specified values. Check that the steering wheel turns easily and smoothly without rattling by turning it all the way to the right and to the left while driving very slowly in an open area. If the amount of free play is outside the specification or you find anything else to be wrong, an inspection must be performed by your SUZUKI dealer.

Power Steering (if equipped)

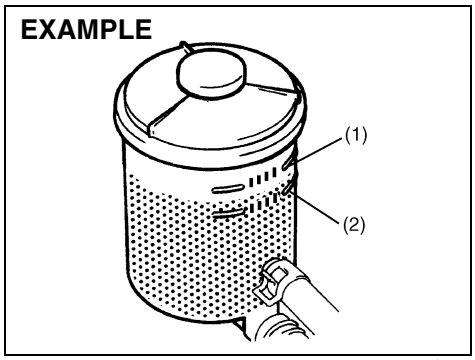

54G225

(1) UPPER
(2) LOWER

Check the steering box case, vane pump and hose connections for leaks or damage.

Power Steering Fluid

Check the fluid level by looking at the reservoir in the engine compartment when the fluid is cold (about room temperature).

Check that the fluid level is between the "UPPER" and "LOWER" lines. If the fluid level is near the "LOWER" line, fill it up to the "UPPER" line with an automatic transaxle fluid equivalent to ATF DEXRON®-II (Esso JWS 2326) or DEXRON®-III. Do not overfill.

Downloaded from www.Manualslib.com manuals search engine

Clutch Pedal

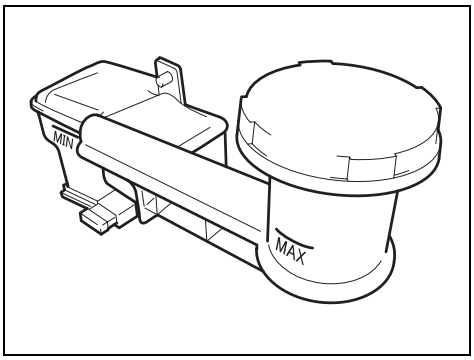

80J004

Check the clutch pedal for smooth operation and clutch fluid level from time to time. If clutch dragging is felt with the pedal fully depressed, have the clutch inspected by your SUZUKI dealer. If the clutch fluid level is near the “MIN” line, fill it up to the “MAX” line with DOT3 brake fluid.

Tires

For safe operation of your vehicle, it is important that the tires be the correct type and size, in good condition, and properly inflated. Be sure to follow the requirements and recommendations in this section.

Tire Sidewall Labeling

Useful information about a tire is molded into its sidewall. The example below shows a typical passenger car tire.

Typical Passenger Car Tire Sidewall

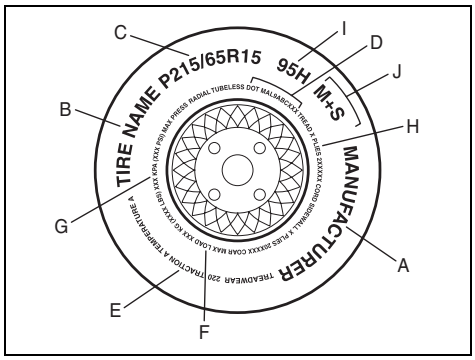

67D027

A. Tire Manufacturer
The name of the tire manufacturer is shown here.

B. Tire Name/Model
The tire name or model is shown here.

C. Tire Size
The tire size code is a combination of letters and numbers used to define a particular tire’s width, height, aspect ratio, construction type, and service description. See the “Tire Size” explanation later in this section for more details.

D. U.S. DOT Tire Identification Number
The Department of Transportation (DOT) marking indicates that the tire is in compliance with the U.S. Department of Transportation Motor Vehicle Safety Standards. The letters and numbers following the DOT marking is the Tire Identification Number (TIN). The TIN identifies the tire manufacturer and plant, tire size, and date the tire was manufactured.

E. Uniform Tire Quality Grading (UTQG)
Tire manufacturers are required to grade tires based on three performance factors: treadwear, traction and temperature resistance. Refer to the “Uniform Tire Quality Grading” section for more details.

F. Load Rating
Load rating is the maximum weight a tire is designed to support in normal service.

G. Max Inflation Pressure
Max inflation pressure is the maximum inflation pressure a tire is designed for.

Downloaded from www.Manualslib.com manuals search engine

H. Tire Ply Material
These tire markings describe the type of cord and number of plies in the sidewall and under the tread.

I. Load Index and Speed Rating
The two- or three-digit number is the tire's load index, the maximum load a tire can carry at the speed indicated by its speed symbol at the maximum inflation pressure. The higher the number is, the greater the load carrying capacity. The letter symbol denotes the speed at which a tire is designed to be driven for extended periods of time. (Ratings are listed below.)

Letter Rating	Speed Rating
Q	99 mph
R	106 mph
S	112 mph
T	118 mph
U	124 mph
H	130 mph
V	149 mph
W	168 mph*
Y	186 mph*

*The letters ZR may be used on tires with a maximum speed capability over 149 mph and will always be used on tires with a maximum speed capability over 186 mph.

J. M+S Marking
This marking indicates the tire has some mud and snow capabilities and is designed for all-season use.

Tire Size

The following illustration shows an example of a typical passenger car tire size.

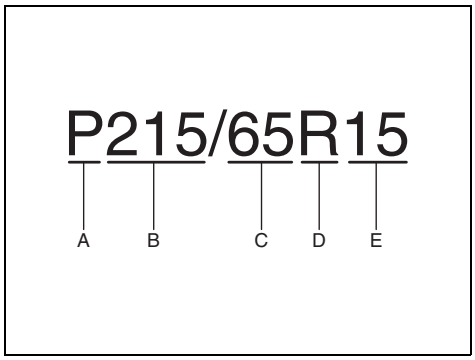

67D028

A. Tire Type
This letter code indicates the primary intended use of the tire. The letter "P" identifies a tire primarily intended for use on a passenger vehicle.

B. Tire Width
This three-digit number indicates the tire section width in millimeters from sidewall to sidewall.

C. Aspect Ratio
This two-digit number represents the tire section height divided by the tire section width.

D. Construction Code
This letter code is used to indicate the type of ply construction in the tire. The letter "R" means radial ply tire construction, the letter "D" means diagonal or bias ply construction, and the letter "B" means belted-bias ply construction.

E. Rim Diameter
This two-digit number is the wheel or rim diameter in inches.

⚠ WARNING

Your SUZUKI is equipped with tires which are all the same type and size. This is important to ensure proper steering and handling of the vehicle. Never mix tires of different size or type on the four wheels of your vehicle. Mixing tires could cause you to lose control while driving which may lead to an accident. The size and type of tires used should be only those approved by SUZUKI Motor Corporation as standard or optional equipment for your vehicle.

Downloaded from www.Manualslib.com manuals search engine

Tire Inflation Pressure

Tire inflation pressure should be checked when the tire is cold. “Cold tire inflation pressure” is the pressure in a tire that has been driven less than 1 mile (1.6 km) or has been standing for three hours or more.

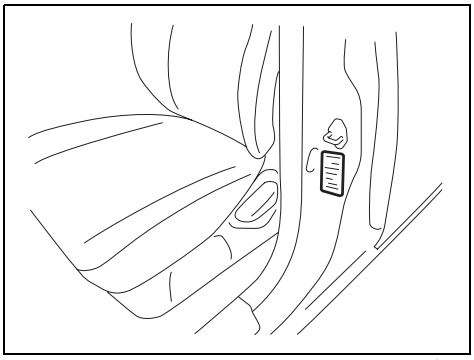

80JS025

The front and rear tire pressure specifications for your vehicle are shown below and are listed on the Tire and Loading Information Label, which is located on the driver’s door lock pillar. The Tire and Loading Information Label contains the following information:

- Seating Capacity
- Maximum Allowed Combined Weight of Occupants and Cargo
- Original Tire Size
- Recommended Cold Tire Inflation Pressure of Original Tires
- Size of Compact Spare Tire
- Recommended Cold Tire Inflation Pressure of Compact Spare Tire

Recommended Cold Tire Inflation Pressures	
Front Tires	230 kPa 33 psi
Rear Tires	230 kPa 33 psi
Compact Spare Tire	420 kPa 60 psi

NOTE:
The tire inflation pressure will change due to changes in atmospheric pressure, temperature or tire temperature when driving. To reduce the chance that the low tire pressure warning light will come on due to normal changes in temperature and atmospheric pressure, it is important to check and adjust the tire pressures when the tires are cold. Tires that appear to be at the specified pressure when checked after driving, when the tires are warm, could have pressure below the specification when the tires cool down. Also, tires that are inflated to the specified pressure in a warm garage may have pressure below the specification when the vehicle is driven outside in very cold temperature. If you adjust the tire pressure in a garage that is warmer than the outside temperature, you should add 1 psi to the recommended cold tire inflation pressure for every 10°F difference between garage temperature and outside temperature.

Measuring Air Pressure

Use the following steps to achieve proper tire inflation:

1) Identify the recommended tire pressure on the vehicle’s Tire and Loading Information Label or in the owner’s manual.
2) Remove the valve cap from the tire valve stem.
3) Using a reliable pressure gauge, measure the tire inflation pressure by pressing the tire gauge firmly onto the valve to get a pressure measurement. Remember that inflation pressures should be checked when the tires are “cold”, meaning before they have been driven one mile or after sitting for three hours or more allowing the tire to cool to ambient air temperature.
4) If the air pressure is too high, slowly release the air by pressing on the tire valve stem with the edge of the tire gauge until you reach the correct pressure.
5) If the air pressure is too low, fill the tire with air at a service station until it reaches the recommended pressure.
6) Make sure all tires have the same air pressure (unless the owner’s manual indicates otherwise).

Downloaded from www.Manualslib.com manuals search engine

INSPECTION AND MAINTENANCE

⚠ WARNING

- **Air pressures should be checked when the tires are cold or you may get inaccurate readings.**
- **Check the inflation pressure from time to time while inflating the tire gradually, until the specified pressure is obtained.**
- **Never underinflate or overinflate the tires.**
  Underinflation can cause unusual handling characteristics or can cause the rim to slip on the tire bead, resulting in an accident or damage to the tire or rim.
  Underinflation can also cause tires to overheat, leading to tire failure.
  Overinflation can cause the tire to burst, resulting in personal injury.
  Overinflation can also cause unusual handling characteristics which may result in an accident.

Tire Inspection

Inspect your vehicle's tires at least once a month by performing the following checks:

1) Measure the air pressure with a tire gauge. Adjust the pressure if necessary. Remember to check the spare tire, too. Refer to the "Measuring Air Pressure" section.

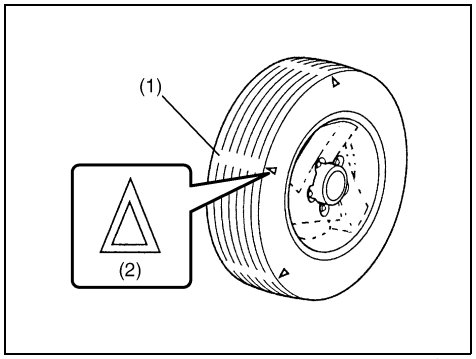

54G136

(1) Tread wear indicator
(2) Indicator location mark

2) Check that the depth of the tread groove is more than 1.6 mm (0.06 in.). To help you check this, the tires have molded-in tread wear indicators in the grooves. When the indicators appear on the tread surface, the remaining depth of the tread is 1.6 mm (0.06 in.) or less and the tire should be replaced.
3) Check for abnormal wear, cracks and damage. Any tires with cracks or other damage should be replaced. If any tires show abnormal wear, have them inspected by your SUZUKI dealer.

⚠ WARNING

Hitting curbs and running over rocks can damage tires and affect wheel alignment. Be sure to have tires and wheel alignment checked periodically by your SUZUKI dealer.

4) Check for loose wheel nuts.
5) Check that there are no nails, stones or other objects sticking into the tires.

⚠ WARNING

Your SUZUKI is equipped with tires which are all the same type and size. This is important to ensure proper steering and handling of the vehicle. Never mix tires of different size or type on the four wheels of your vehicle. The size and type of tires used should be only those approved by SUZUKI Motor Corporation as standard or optional equipment for your vehicle.

Downloaded from www.Manualslib.com manuals search engine

CAUTION

For intelligent All Wheel Drive (i-AWD) models, replacing a tire with one of a different size, or using different brands among the four tires can result in damage to the drive train.

⚠ WARNING

Replacing the wheels and tires equipped on your vehicle with certain combinations of aftermarket wheels and tires can significantly change the steering and handling characteristics of your vehicle. Oversized tires may also rub against the fender over bumps, causing vehicle damage or tire failure. Therefore, use only those wheel and tire combinations approved by SUZUKI Motor Corporation as standard or optional equipment for your vehicle. For information regarding the specified tires, refer to the Tire Information Label located on the driver's side door pillar or the "SPECIFICATIONS" section.

CAUTION

Replacing the original tires with tires of a different size may result in false speedometer or odometer readings. Check with your SUZUKI dealer before purchasing replacement tires that differ in size from the original tires.

Uniform Tire Quality Grading

The U.S. National Highway Traffic Safety Administration has developed a grading system for evaluating the performance of passenger car tires. The following information will help you understand the grading system, which applies to vehicles sold in the U.S. Consult your SUZUKI dealer or tire retailer for help in choosing the correct replacement tires for your vehicle.

Quality grades can be found where applicable on the tire sidewall between tread shoulder and maximum section width. For example:

Treadwear 200 Traction AA Temperature A

DOT Quality Grades
Treadwear
Traction AA A B C
Temperature A B C
All Passenger Car Tires Must Conform To Federal Safety Requirements in Addition To These Grades

Treadwear
The treadwear grade is a comparative rating based on the wear rate of the tire when tested under controlled conditions on a specified government test course. For example, a tire graded 150 would wear one and one-half (1 1/2) times as well on the government course as a tire graded 100. The relative performance of tires depends upon the actual conditions of their use, however and may depart significantly from the norm due to variations in driving habits, service practices and differences in road characteristics and climate.

Traction – AA, A, B, C
The traction grades, from highest to lowest, are AA, A, B and C. Those grades represent the tire's ability to stop on wet pavement as measured under controlled conditions on specified government test surfaces of asphalt and concrete. A tire marked C may have poor traction performance.

⚠ WARNING

The traction grade assigned to this tire is based on straight-ahead braking traction tests, and does not include acceleration, cornering, hydroplaning or peak traction characteristics.

Downloaded from www.Manualslib.com manuals search engine

INSPECTION AND MAINTENANCE

Temperature – A, B, C
The temperature grades are A (the highest), B and C, representing the tire's resistance to the generation of heat and its ability to dissipate heat when tested under controlled conditions on a specified indoor laboratory test wheel. Sustained high temperature can cause the material of the tire to degenerate and reduce tire life, and excessive temperature can lead to sudden tire failure. The grade C corresponds to a level of performance which all passenger car tires must meet under the Federal Motor Vehicle Safety Standard No. 109. Grades B and A represent higher levels of performance on the laboratory test wheel than the minimum required by law.

⚠ WARNING

The temperature grade for this tire is established for a tire that is properly inflated and not overloaded. Excessive speed, underinflation or excessive loading, either separately or in combination, can cause heat buildup and possible tire failure.

Tire Rotation

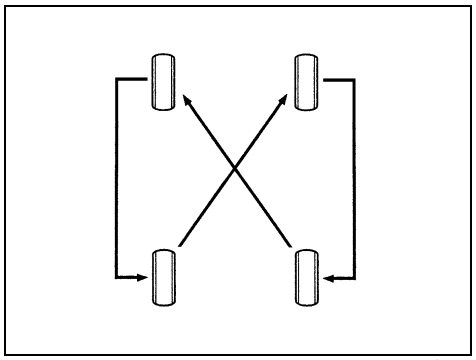

54G114

To avoid uneven wear of your tires and to prolong their life, rotate the tires as illustrated. Tires should be rotated as recommended in the periodic maintenance schedule. After rotation, adjust front and rear tire pressures to the specification listed on your vehicle's Tire and Loading Information Label.

⚠ WARNING

Rust or dirt on a wheel, or on the parts to which it is fastened, can make wheel nuts become loose after a time. The wheel could come off and cause an accident. When you change a wheel, remove any rust or dirt from places where the wheel attaches to the vehicle. In an emergency, you can use a cloth or a paper towel to do this; but be sure to use a scraper or wire brush later, if you need to, to get all the rust or dirt off.

Downloaded from www.Manualslib.com manuals search engine

Compact Spare Tire (if equipped)

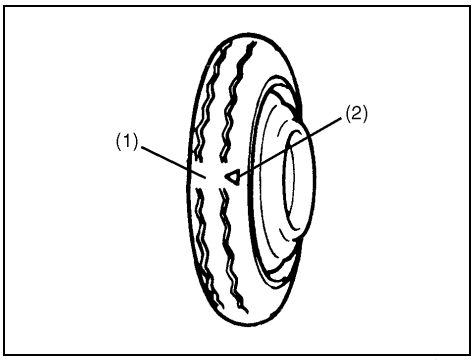

54G115

(1) Wear indicator
(2) Indicator location mark

Your vehicle comes equipped with the compact spare tire. The compact spare is designed to save space in your storage area, and its lighter weight makes it easier to install if a flat tire occurs. It is only intended for temporary emergency use, until the conventional tire can be repaired or replaced. The inflation pressure of the compact spare tire should be checked at least monthly. Use a quality pocket-type inflation pressure gauge and set at 420 kPa (60 psi). At the same time, check that the tire is stored securely. If it is not, tighten it.
Note that two or more compact spare tires should not be used on one vehicle simultaneously.

⚠ WARNING

The compact spare tire and wheel are intended for temporary emergency use only. Continuous use of this spare can result in tire failure and loss of control. Always observe these precautions when using this spare:

- **Your vehicle will handle differently with this temporary spare.**
- **Do not exceed 80 km/h (50 mph) speed.**
- **Replace this spare with a standard tire and wheel as soon as possible.**
- **Use of this spare will reduce ground clearance.**
- **Recommended air pressure for this spare is 420 kPa (60 psi).**
- **Do not use tire chains on the compact spare. If you must use tire chains, rearrange the wheels so standard tires and wheels are fitted to the front axle.**
- **The compact spare tire has a much shorter tread life than the conventional tires on your vehicle. Replace the tire as soon as the tread wear indicator appears.**
- **When replacing the compact tire, use a replacement tire with the exact same size and construction.**

CAUTION

For intelligent All Wheel Drive (i-AWD) models, driving with an under-inflated compact spare tire or over 80 km/h (50 mph) while using a compact spare tire can result in damage to the drive train.

Downloaded from www.Manualslib.com manuals search engine

INSPECTION AND MAINTENANCE

Changing Wheels

SX4

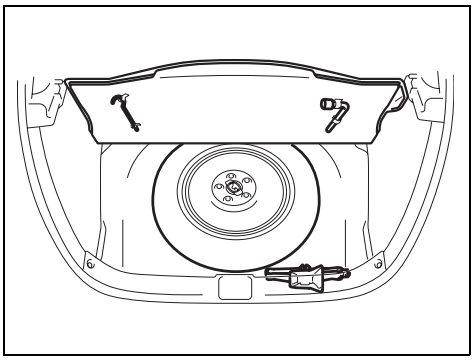

80JC014

SX4 SEDAN

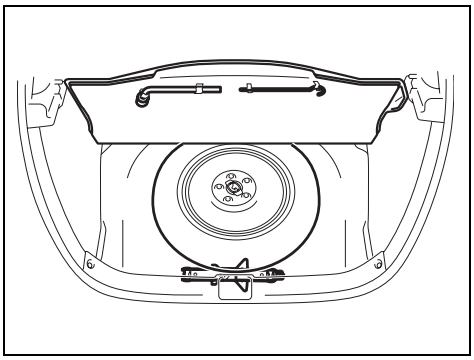

80JC045

To change a wheel, use the following procedure:

1) Remove the jack, tools and spare wheel from the vehicle.
2) Loosen, but do not remove the wheel nuts.
3) Jack up the vehicle (follow the jacking instructions in the “EMERGENCY SERVICE” section in this manual).
4) Remove the wheel nuts and wheel.
5) Install the new wheel and replace the wheel nuts with their cone shaped end facing the wheel. Tighten each nut snugly by hand until the wheel is securely seated on the hub.

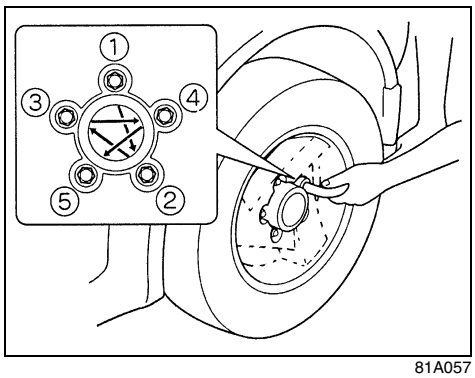

81A057

Wheel tightening torque
85 Nm (61.5 lb-ft, 8.5 kg-m)

6) Lower the jack and fully tighten the nuts (to the specified torque) in a crisscross fashion with a wrench as shown in the illustration.

Snow Tires

Your vehicle is equipped with all-season tires which are designed for use in summer and most winter conditions. For improved traction in severe winter conditions, SUZUKI recommends mounting radial snow tires on all four wheels. Snow tires must be the same size as the standard tires. Also be sure to use the tires of the same type and brand on all four wheels of your vehicle.

Downloaded from www.Manualslib.com manuals search engine

Fuses: 7

GLOSSARY OF TIRE TERMINOLOGY

Accessory Weight – the combined weight (in excess of those standard items which may be replaced) of automatic transaxle, power steering, power brakes, power windows, power seats, radio, and heater, to the extent that these items are available as factory-installed equipment (whether installed or not).

Cold Tire Inflation Pressure – the pressure in a tire that has been driven less than 1 mile or has been standing for three hours or more.

Curb Weight – the weight of a motor vehicle with standard equipment including the maximum capacity of fuel, oil, and coolant, and, if so equipped, air conditioning and additional weight optional engine.

Intended Outboard Sidewall – (1) the sidewall that contains a whitewall, bears white lettering or bears manufacturer, brand, and/or model name molding that is higher or deeper than the same molding on the other sidewall of the tire, or (2) the outward facing sidewall of an asymmetrical tire that has a particular side that must always face outward when mounted on a vehicle.

Maximum Inflation Pressure – the maximum cold inflation pressure a tire is designed to support in normal service.

Maximum Loaded Vehicle Weight – the sum of curb weight, accessory weight, vehicle capacity weight (total load capacity), and production options weight.

Normal Occupant Weight – 68 kilograms times the number of occupants specified in the second column of Table 1 (shown below).

Occupant distribution – distribution of occupants in a vehicle as specified in the third column of Table 1 (shown below).

Production Options Weight – the combined weight of those installed regular production options weighing over 2.3 kilograms in excess of those standard items which they replace, not previously considered in curb weight or accessory weight, including heavy duty brakes, ride levelers, roof rack, heavy duty battery, and special trim.

Recommended Inflation Pressure – the cold tire inflation pressure recommended by a manufacturer.

Rim – metal support for a tire or tire and tube assembly upon which the tire beads are seated.

Vehicle Capacity Weight – the rated cargo and luggage load plus 68 kilograms (150 lbs) times the vehicle's designated seating capacity.

Vehicle Maximum Load on the Tire – the load on an individual tire that is determined by distributing to each axle its share of the maximum loaded vehicle weight and dividing by two.

Vehicle Normal Load on the Tire – the load on an individual tire that is determined by distributing to each axle its share of the curb weight, accessory weight, and normal occupant weight (distributed in accordance with Table 1 shown below) and dividing by 2.

TABLE 1 – Occupant Loading and Distribution For Vehicle Normal Load For Various Designated Seating Capacities

Designated seating capacity, number of occupants	Vehicle normal load, number of occupants	Occupant distribution in a normally loaded vehicle
2 through 4	2	2 in front
5 through 10	3	2 in front, 1 in second seat

Downloaded from www.Manualslib.com manuals search engine

Vehicle Loading

Your vehicle was designed for specific load capacities. The load capacities of your vehicle are indicated by the Gross Vehicle Weight Rating (GVWR), the Gross Axle Weight Rating (GAWR, front and rear), and the total load capacity, the seating capacity, and the cargo load capacity. The GVWR and GAWR (front and rear) are listed on the Safety Certification Label which is located below the driver's side door latch striker. The total load capacity and seating capacity are listed on the Tire and Loading Information Label which is located below the Safety Certification Label. The cargo load capacity can be determined as described below.

Cargo Load Capacity – Maximum weight of cargo and luggage that the vehicle can safely carry. Cargo load capacity is the difference between the total load capacity of the vehicle and the total combined weight of all vehicle occupants. Refer to "Steps for Determining Correct Load Limit" for details on how to determine cargo load capacity.

GVWR – Maximum permissible overall weight of the fully loaded vehicle (including all the occupants, accessories and cargo plus the trailer tongue weight if towing a trailer).

GAWR – (Front and Rear) Maximum permissible weight on an individual axle.

Seating Capacity – Maximum number of occupants the vehicle is designed to carry.

NOTE:
Even though the number of occupants is within the seating capacity, you still must make sure that you do not exceed the total load capacity of the vehicle.

Total Load Capacity – Maximum permissible weight a vehicle can carry including the weight of all the occupants, accessories, cargo, plus trailer tongue weight (if towing a trailer).

The weight of any accessories already installed on your vehicle at the time of purchase, or that you or the dealer install after purchase, must be subtracted from the total load capacity to determine how much capacity remains available for occupants, cargo, and trailer tongue weight (if towing a trailer). Contact your dealer for further information.

Actual weight of the loaded vehicle and actual loads at the front and rear axles can only be determined by weighing the vehicle using a vehicle scale. To measure the weight and load, try making your vehicle to a highway weighing station, shipping company or inspection station for trucks, etc. Compare these weights to the GVWR and GAWR (front and rear) listed on the Safety Certification Label. If the gross vehicle weight or the load on either axle exceeds these ratings, you must remove enough weight to bring the load down to the rated capacity.

⚠ WARNING

Never overload your vehicle. Overloading your vehicle can cause damage to your tires and lead to poor steering and braking which can result in an accident. The gross vehicle weight (sum of the weights of the loaded vehicle, driver and passengers) must never exceed the Gross Vehicle Weight Rating (GVWR) listed on the Safety Certification Label. In addition, never distribute a load so that the weight on either the front or rear axle exceeds the Gross Axle Weight Rating (GAWR) listed on the Safety Certification Label.

⚠ WARNING

- **Always distribute cargo evenly.**
- **To avoid personal injury or damage to your vehicle, always secure cargo to prevent it from shifting if the vehicle moves suddenly.**
- **Place heavier objects on the floor and as far forward in the cargo area as possible. Never pile cargo higher than the top of the seatbacks.**

Downloaded from www.Manualslib.com manuals search engine

Steps for Determining Correct Load Limit

1) Locate the statement "The combined weight of occupants and cargo should never exceed XXX kg or XXX lbs" on your vehicle's placard.
2) Determine the combined weight of the driver and passengers that will be riding in your vehicle.
3) Subtract the combined weight of the driver and passengers from XXX kg or XXX lbs.
4) The resulting figure equals the available amount of cargo and luggage load capacity. For example, if the "XXX" amount equals 1400 lbs and there will be five 150 lb passengers in your vehicle, the amount of available cargo and luggage load capacity is 650 lbs (1400 – 750 (5 x 150) = 650 lbs).
5) Determine the combined weight of luggage and cargo being loaded on the vehicle. That weight may not safely exceed the available cargo and luggage load capacity calculated in Step 4.
6) If your vehicle will be towing a trailer, load from your trailer will be transferred to your vehicle. Consult this manual to determine how this reduces the available cargo and luggage load capacity of your vehicle.

Vehicle Loading Example

As an example, suppose that the Tire and Loading Information label on your vehicle indicates that your vehicle's total load capacity is 950 lbs. If you were to drive your vehicle with one passenger, and the total combined weight of you and your passenger was 350 lbs, then the cargo and luggage capacity of your vehicle would be 600 lbs (950 – 350 = 600 lbs).

If you later added 2 more passengers, having a combined weight of 325 lbs, the cargo and luggage capacity of your vehicle would be reduced from 600 lbs to 275 lbs (600 – 325 = 275 lbs). As you can see, as the number and combined weight of vehicle occupants increase, the vehicle's cargo and luggage capacity decreases.

Suppose again, that you were to take a trip in your vehicle with the same three passengers described above, and you decided to tow a trailer having a trailer tongue weight of 75 lbs. The cargo and luggage capacity would be reduced again, to 200 lbs (275 – 75 = 200 lbs).

Determining Compatibility of Tire and Vehicle Load Limits

The tires on your vehicle, when they are inflated to the recommended tire inflation pressure, have a load-carrying capacity that is greater than the load that will be on the tires when the vehicle is at its GVWR or GAWR limit. Never use replacement tires that have a load-carrying capacity less than the original tires on your vehicle. Tire load-carrying capacity information is molded into the tire sidewall typically shown as "Max. Load". Use of replacement tires with a lower load-carrying capacity than the original tires, or failure to keep the tires inflated to recommended tire pressure, may reduce the GVWR or GAWR limit of your vehicle.

NOTE:
Use of replacement tires with a higher load-carrying capacity than the original tires, or using a tire inflation pressure higher than the recommended tire inflation pressure, will not increase the GVWR or GAWR limit of your vehicle.

Downloaded from www.Manualslib.com manuals search engine

INSPECTION AND MAINTENANCE

Battery

EXAMPLE

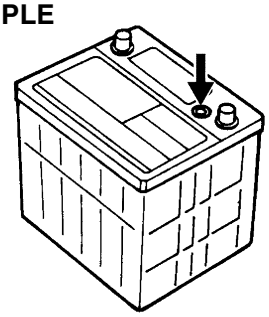

60A269

⚠ WARNING

Batteries produce flammable hydrogen gas. Keep flames and sparks away from the battery or an explosion may occur. Never smoke when working near the battery.

⚠ WARNING

When checking or servicing the battery, disconnect the negative cable. Be careful not to cause a short circuit by allowing metal objects to contact the battery posts and the vehicle at the same time.

⚠ WARNING

To avoid harm to yourself or damage to your vehicle or battery, follow the jump starting instructions in the "EMERGENCY SERVICE" section of this manual if it is necessary to jump start your vehicle.

⚠ WARNING

Battery posts, terminals and related accessories contain lead and lead compounds. Wash hands after handling.

Your vehicle is equipped with a battery that requires infrequent maintenance. You will never have to add water. You should, however, periodically check the battery, battery terminals and battery hold-down bracket for corrosion. Remove corrosion using a stiff brush and ammonia mixed with water, or baking soda mixed with water. After removing corrosion, rinse with clean water.

The test indicator on the top of the battery provides information on the condition of the battery.

If your vehicle is not going to be driven for a month or longer, disconnect the cable from the negative terminal of the battery to help prevent discharge.

Fuses

Your vehicle has three types of fuses, as described below:

Main Fuse – The main fuse takes current directly from the battery.

Primary Fuses – These fuses are between the main fuse and individual fuses, and are for electrical load groups.

Individual Fuses – These fuses are for individual electrical circuits.

For details on protected circuits, refer to the "Fuses and Protected Circuits" section in this manual.

Downloaded from www.Manualslib.com manuals search engine

Fuses in the Engine Compartment

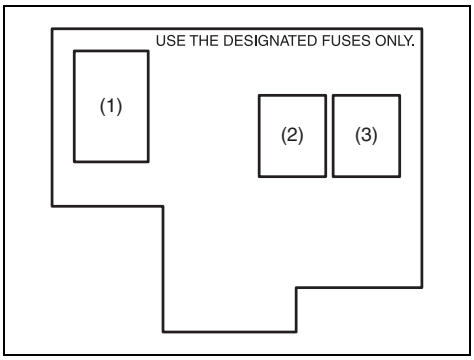

80J051

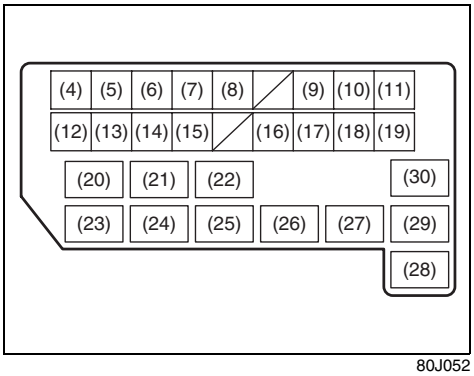

80J052

MAIN FUSE / PRIMARY FUSE		
(1)	80A	All electric load
(2)	50A	Power window, Ignition, Wiper, Starter
(3)	50A	Tail light, Rear defogger, Door lock, Hazard/Horn, Dome
(4)	–	Blank
(5)	–	Blank
(6)	15A	Head light (Right) fuse
(7)	15A	Head light (Left) fuse
(8)	20A	Front fog light fuse
(9)	–	Blank
(10)	40A	ABS control module fuse
(11)	30A	Radiator fan fuse
(12)	30A	ABS control module fuse
(13)	30A	Starting motor fuse
(14)	50A	Ignition switch fuse
(15)	30A	Blower fan fuse
(16)	20A	Air compressor fuse
(17)	15A	Throttle motor fuse
(18)	15A	Automatic transaxle fuse
(19)	15A	Fuel injection fuse
(20)	–	Automatic transaxle relay
(21)	–	Air compressor relay
(22)	–	Fuel pump relay
(23)	–	Condenser fan relay
(24)	–	Front fog light relay
(25)	–	Throttle motor relay
(26)	–	FI MAIN
(27)	–	Starting motor relay
(28)	–	Radiator fan relay
(29)	–	Radiator fan relay 2
(30)	–	Radiator fan relay 3

Downloaded from www.Manualslib.com manuals search engine

INSPECTION AND MAINTENANCE

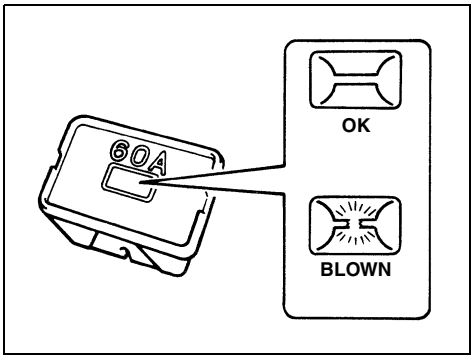

60A243

⚠ WARNING

If the main fuse or a primary fuse blows, be sure to have your vehicle inspected by an authorized SUZUKI dealer. Always use a genuine SUZUKI replacement. Never use a substitute such as a wire even for a temporary fix, or extensive electrical damage and a fire can result.

Fuses under the Dash Board

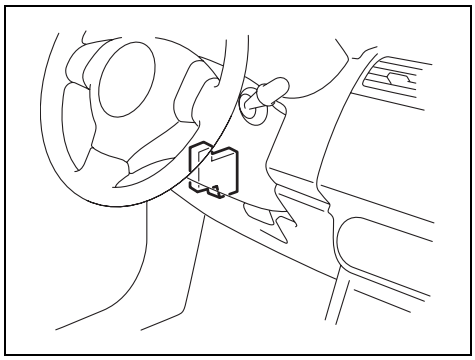

79J093

SX4

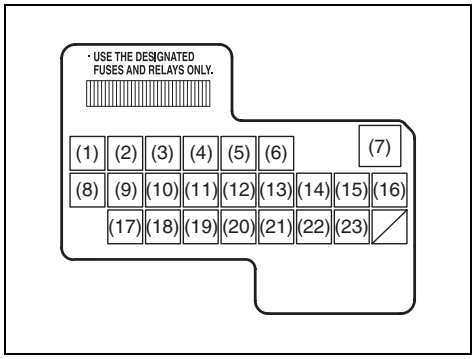

80J053

MAIN FUSE / PRIMARY FUSE		
(1)	15A	Rear wiper
(2)	15A	Ignition coil
(3)	10A	Back-up light
(4)	10A	Meter
(5)	15A	Accessory
(6)	15A	Accessory 2
(7)	30A	Power window
(8)	30A	Wiper
(9)	10A	IG1 SIG
(10)	15A	Air bag
(11)	10A	Anti-lock brake system
(12)	15A	4WD
(13)	15A	Stop light
(14)	20A	Door lock
(15)	–	Blank
(16)	10A	ST SIG
(17)	15A	Seat heater
(18)	10A	IG 2 SIG
(19)	10A	Tail light
(20)	15A	Dome

Downloaded from www.Manualslib.com manuals search engine

(21)	30A	Rear defogger
(22)	15A	Horn / Hazard
(23)	15A	Audio

SX4 SEDAN

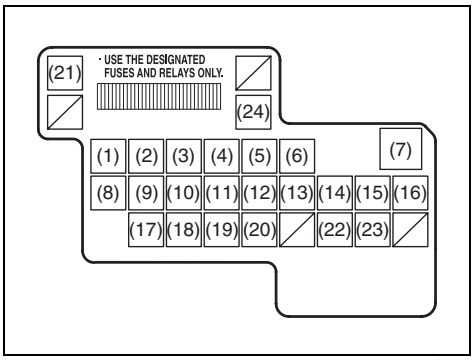

80JC003

MAIN FUSE / PRIMARY FUSE		
(1)	15A	Rear wiper
(2)	15A	Ignition coil
(3)	10A	Back-up light
(4)	10A	Meter
(5)	15A	Accessory
(6)	15A	Accessory 2
(7)	30A	Power window
(8)	30A	Wiper
(9)	10A	IG1 SIG
(10)	15A	Air bag
(11)	10A	Anti-lock brake system
(12)	–	Blank
(13)	15A	Stop light
(14)	20A	Door lock
(15)	–	Blank
(16)	10A	ST SIG
(17)	15A	Seat heater
(18)	10A	IG 2 SIG
(19)	10A	Tail light
(20)	15A	Dome
(21)	30A	Rear defogger
(22)	15A	Horn / Hazard
(23)	15A	Audio
(24)	30A	Rear defogger

EXAMPLE

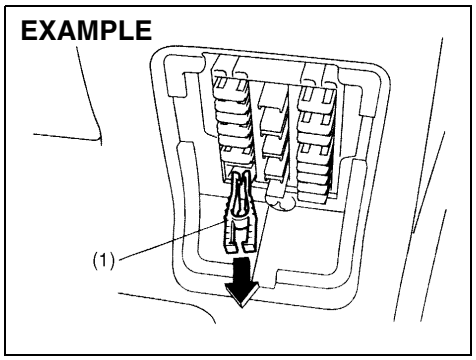

54G256

(1) Fuse puller

The fuses are also located under the driver's side of the dashboard. Remove the fuse box lid by pulling it off. To remove a fuse, use the fuse puller provided in the fuse box. The amperage of each fuse is shown on the top of the fuse box cover.

Downloaded from www.Manualslib.com manuals search engine

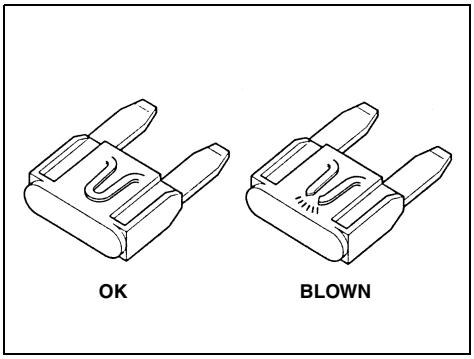

65D046

⚠ WARNING

Always be sure to replace a blown fuse with a fuse of the correct amperage. Never use a substitute such as aluminum foil or wire to replace a blown fuse. If you replace a fuse and the new one blows in a short period of time, you may have a major electrical problem. Have your vehicle inspected immediately by your SUZUKI dealer.

NOTE:
Make sure that the fuse box always carries spare fuses.

Headlight Aiming

Since special procedures are required, we recommend you take your vehicle to your SUZUKI dealer for headlight alignment.

Bulb Replacement

⚠ WARNING

- **Light bulbs can be hot enough to burn your finger right after being turned off. This is true especially for halogen headlight bulbs.**
  Replace the bulbs after they become cool enough.
- **The headlight bulbs are filled with pressurized halogen gas. They can burst and injure you if they are hit or dropped. Handle them carefully.**

CAUTION

The oils from your skin may cause a halogen bulb to overheat and burst when the lights are on. Grasp a new bulb with a clean cloth.

CAUTION

Frequent replacement of a bulb indicates the need for an inspection of the electrical system. This should be carried out by your SUZUKI dealer.

NOTE:
If it is difficult to replace headlight bulbs or parking light bulbs due to under-hood components trust this job to your dealer.

Downloaded from www.Manualslib.com manuals search engine

Center Interior Light (if equipped)

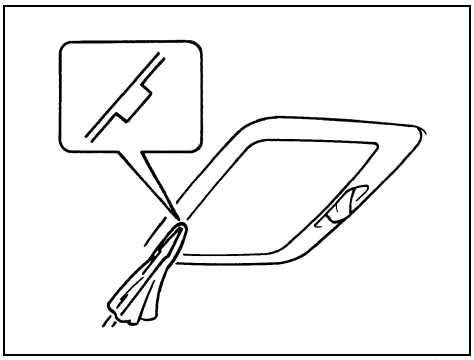

60G115

Pull down the lens by using a plain screw driver covered with a soft cloth as shown. To install it, simply push it back in.

The bulb can be removed by simply pulling it out. When replacing the bulb, make sure that the contact springs are holding the bulb securely.

Headlights

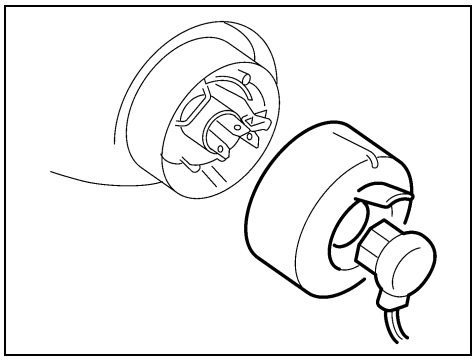

65D149

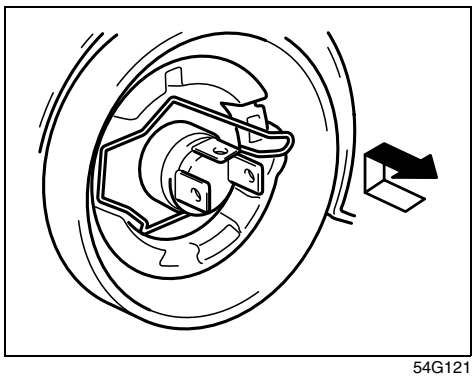

54G121

Open the engine hood. Remove the coupler and the rubber cover. Then unhook the bulb holding spring and replace the bulb.

Other General Lights

Bulb holder

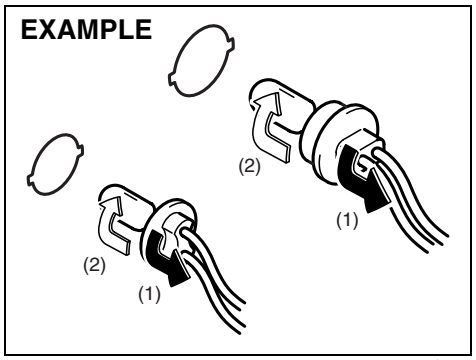

54G123

(1) Removal
(2) Installation

To remove a bulb holder from a light housing, turn the holder counterclockwise and pull it out. To install the holder, push the holder in and turn it clockwise.

Downloaded from www.Manualslib.com manuals search engine

INSPECTION AND MAINTENANCE

Bulb

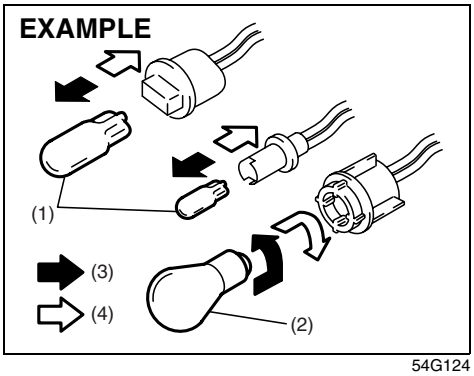

54G124

(3) Removal
(4) Installation

There are two types of bulb, “Full glass type” (1) and “Glass/metal type” (2).

To remove and install a full glass type bulb (1), simply pull out or push in the bulb.

To remove a glass metal type bulb (2) from a bulb holder, push in the bulb and turn it counterclockwise. To install a new bulb, push it in and turn it clockwise.

You can access the individual bulb or bulb holders as follows.

Front parking light (1)
Front turn signal light (2)

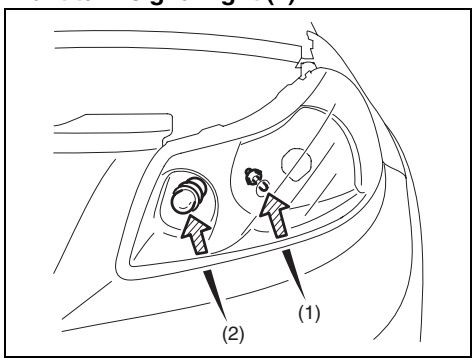

79J012

Front fog light (if equipped)

SX4

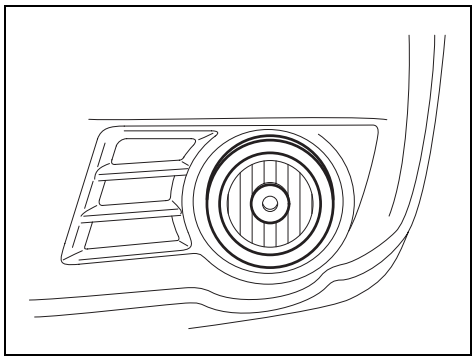

80J006

SX4 SEDAN

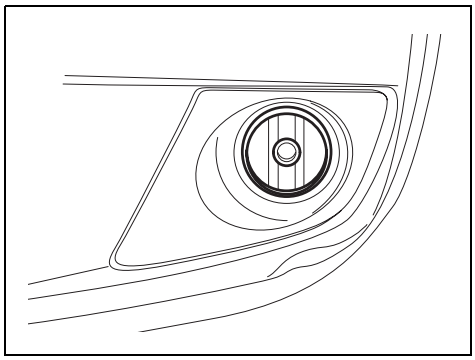

55KS039

Downloaded from www.Manualslib.com manuals search engine

INSPECTION AND MAINTENANCE

Rear combination light (tail, stop, turn signal, etc.)

SX4

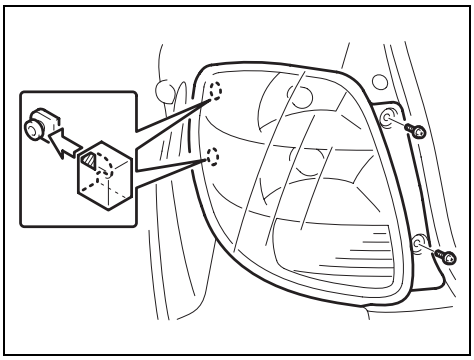

79J014

SX4 SEDAN

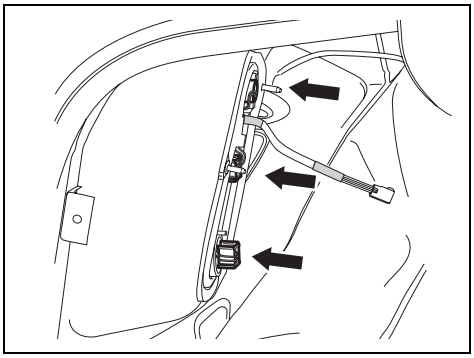

80JC046

Spot light

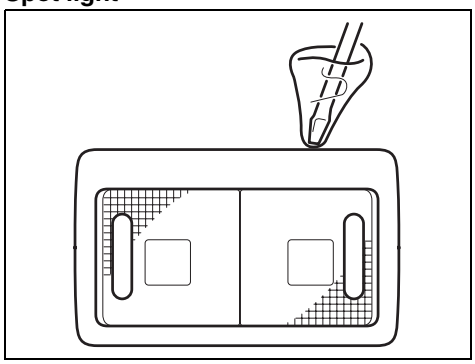

79J131

License plate light

SX4

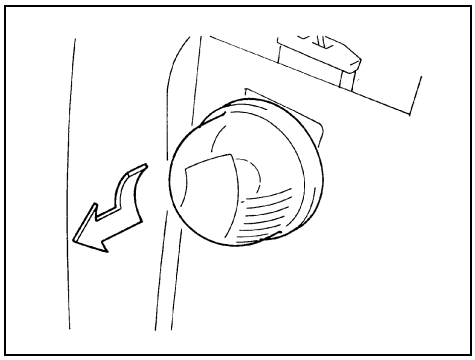

75F087

SX4 SEDAN

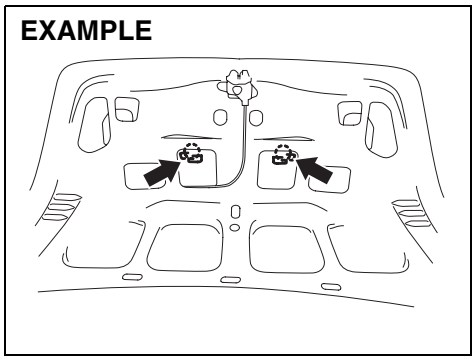

56KN048

Downloaded from www.Manualslib.com manuals search engine

Luggage compartment light (SX4)

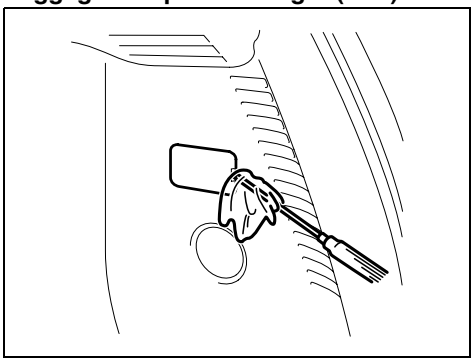

79J015

Trunk room light (SX4 SEDAN)

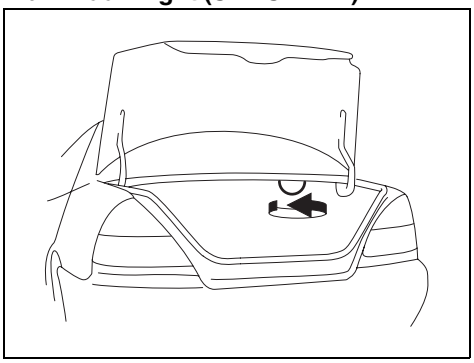

56KN004

High-mount stop light (if equipped)

SX4

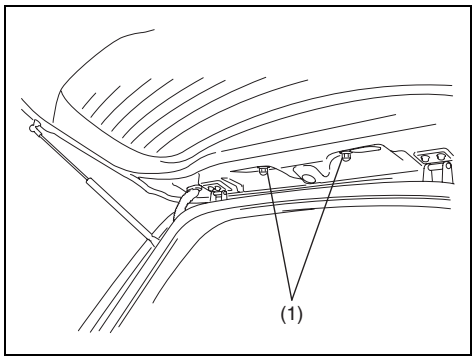

80J100

To remove a high-mounted stop light housing the following procedure:

1) Open the tailgate, and remove the nuts (1) as shown in the illustration.

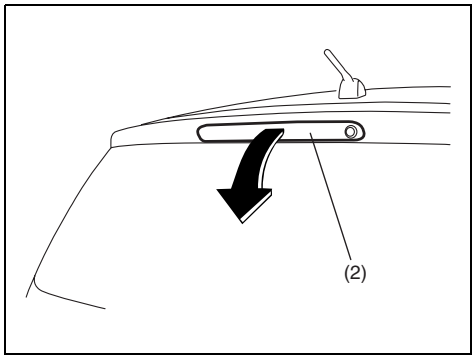

63J127

2) Close the tailgate. Remove a high-mounted stop light housing (2) from the tailgate.

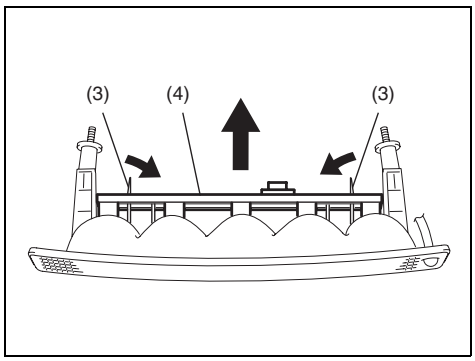

63J107

Downloaded from www.Manualslib.com manuals search engine

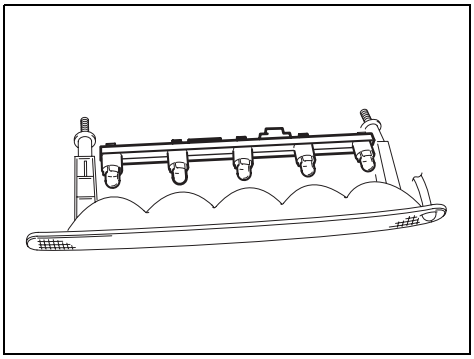

63J108

3) Pushing the unguiform prongs (3) toward inside and remove the bulb holder (4).
4) Replace the bulbs.
   To install a high-mounted stop light housing in the reverse order of removal.

SX4 SEDAN

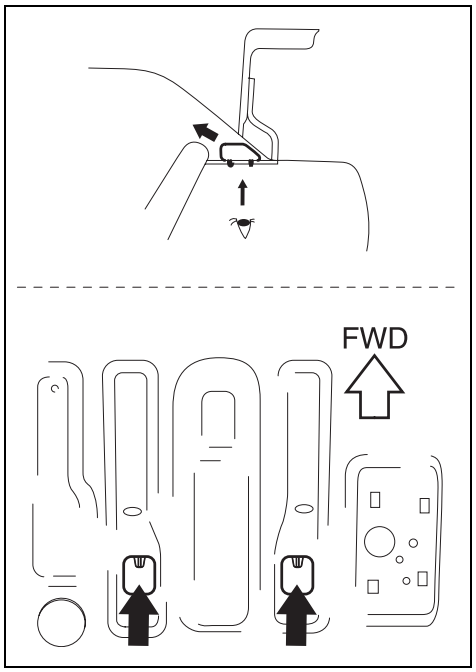

80JC047

Wiper Blades

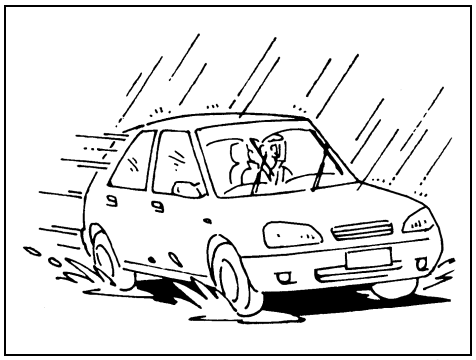

80G083

If the wiper blades become brittle or damaged, or make streaks when wiping, replace the wiper blades.

To install new wiper blades, follow the procedures below.

CAUTION
To avoid scratching or breaking the window, do not let the wiper arm strike the window while replacing the wiper blade.

NOTE:
Some wiper blades may be different from the ones described here depending on vehicle specifications. If so, consult your SUZUKI dealer for proper replacement method.

Downloaded from www.Manualslib.com manuals search engine

For windshield wipers and some rear wipers:

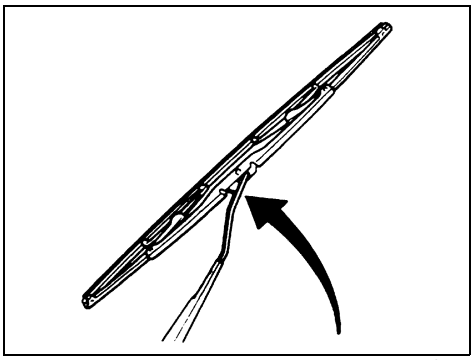

70G119

1) Hold the wiper arm away from the window.

NOTE:
When raising both of the front wiper arms, pull the driver's side wiper arm up first.
When returning the wiper arms, lower the passenger's side wiper arm first. Otherwise, the wiper arms may interfere with each other.

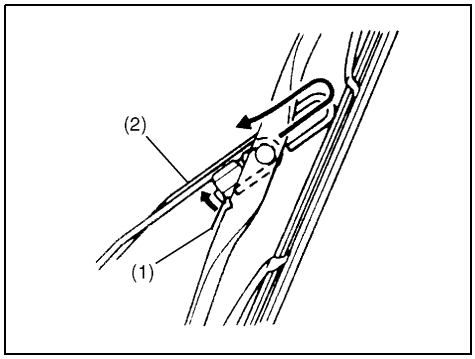

52D102

2) Squeeze lock lever (1) towards wiper arm (2) and remove the wiper frame from the arm as shown.

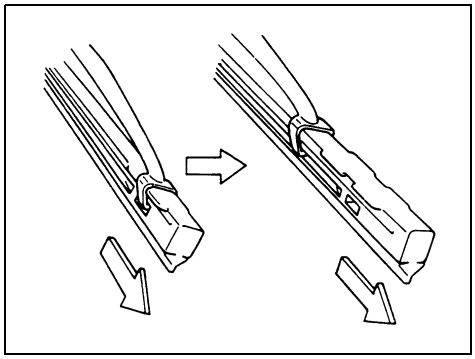

60A260

3) Pull the locked end of the wiper blade firmly to unlock the blade and slide the blade out as shown.

Downloaded from www.Manualslib.com manuals search engine

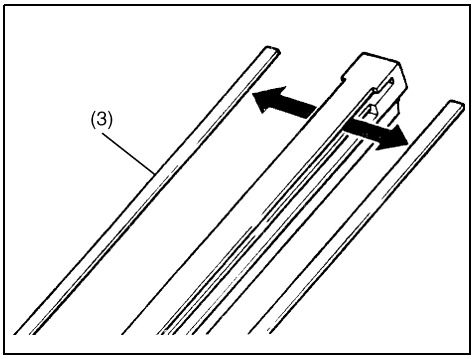

52D124

(3) Retainer

4) If the new blade is provided without the two metal retainers, move them from the old blade to the new one.

Installation

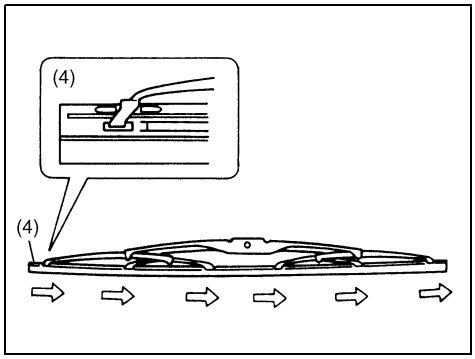

52D125

(4) Locked end

5) Install the new blade in the reverse order of removal, with the locked end positioned toward the wiper arm. Make sure the blade is properly retained by all the hooks. Grasp the blade near the locked end and pull in the direction of the arrows to lock the end into place.
6) Reinstall wiper frame to arm, making sure that the lock lever is snapped securely into the arm.

To remove some types of rear wiper frame from the wiper arm:

1) Hold the arm away from the window.

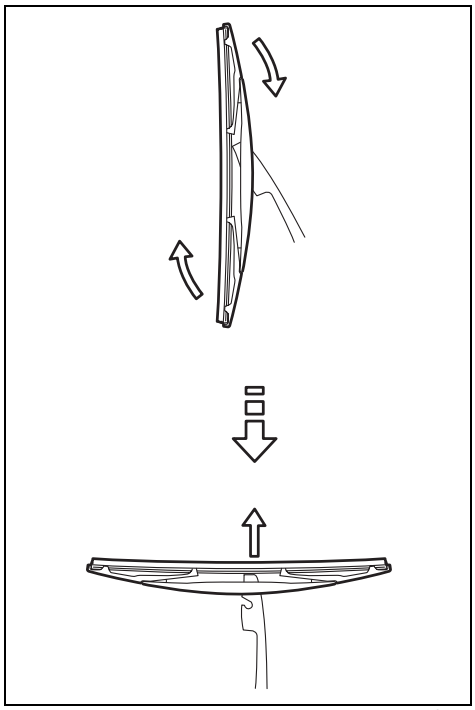

80G146

2) Remove the wiper frame from the arm as shown.

Downloaded from www.Manualslib.com manuals search engine

3) When reinstalling wiper frame to arm, install the wiper frame in the reverse order of removal.

To remove and install some types of rear wiper blade from and to the wiper frame.

Removal

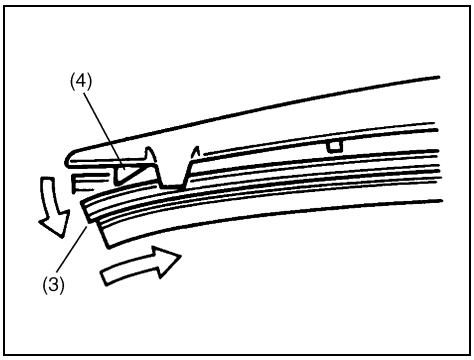

52D104

1) Flex the locked end of blade (3) away from retainer (4) to unlock it and slide the blade out as shown.

Installation

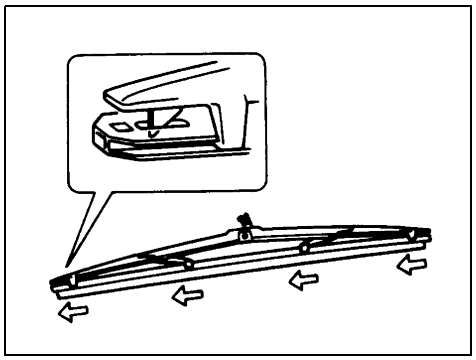

60A265

2) Install the new blade in the reverse order of removal. Make sure that the blade is properly retained by all the hooks and the end is locked in place.

To remove and install some types of rear wiper blade from and to the wiper frame.

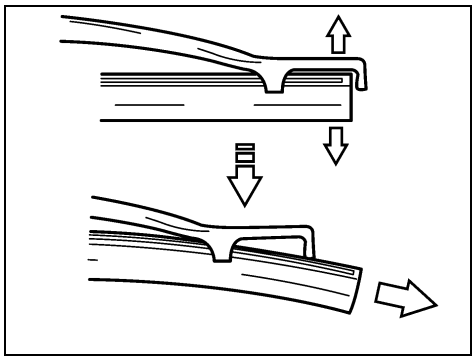

65D151

1) Flex the ends of blade and frame, and slide the blade out as shown.
   But do not flex the frame end more than necessary.
   If you do, it can break off.
2) Install the new blade in the reverse order of removal. Make sure that the blade is properly retained by all the hooks and both ends are in place.

Downloaded from www.Manualslib.com manuals search engine

Air Conditioning System

If you do not use the air conditioner for a long period, such as during winter, it may not give the best performance when you start using it again. To help maintain optimum performance and durability of your air conditioner, it needs to be run periodically. Operate the air conditioner at least once a month for one minute with the engine idling. This circulates the refrigerant and oil and helps protect the internal components.

Downloaded from www.Manualslib.com manuals search engine

MEMO

Downloaded from www.Manualslib.com manuals search engine

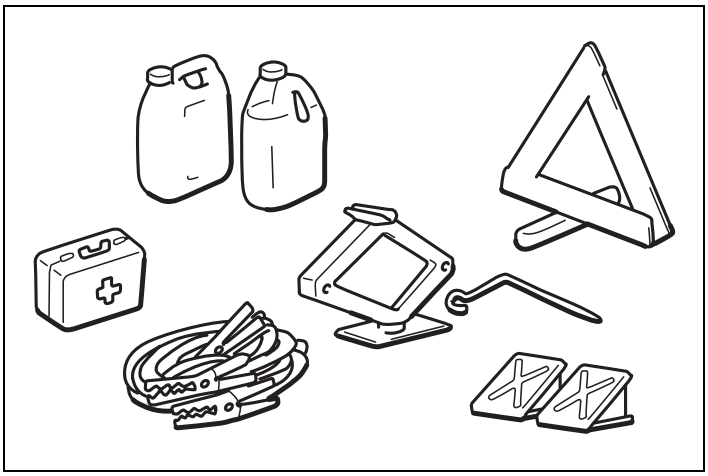

60G411

EMERGENCY SERVICE

Jacking Instructions 10-1
Jump Starting Instructions 10-3
Towing a Disabled Vehicle 10-4
If the Starter Does Not Operate 10-4
If the Engine is Flooded 10-5
If the Engine Overheats 10-5
If You Can Not Shift Automatic Transaxle Gearshift Lever Out of “P” (PARK) 10-6

Downloaded from www.Manualslib.com manuals search engine

EMERGENCY SERVICE

Jacking Instructions

SX4

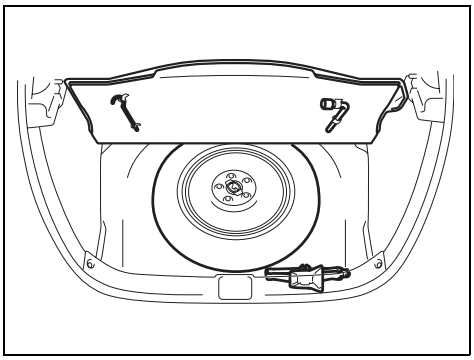

80JC014

SX4 SEDAN

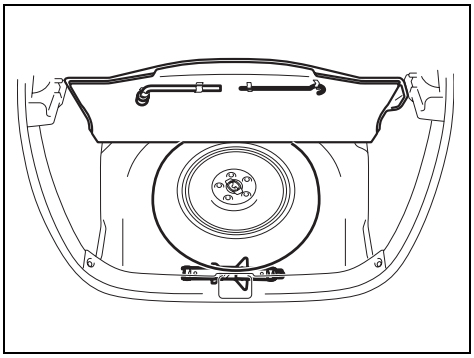

80JC045

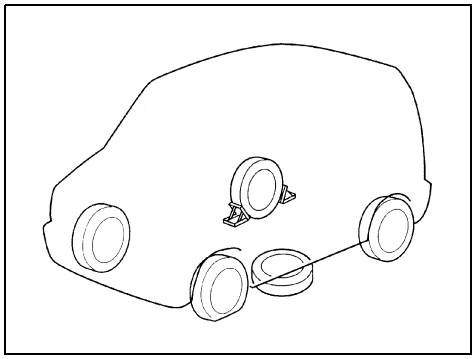

75F062

1) Place the vehicle on level, hard ground.
2) Set the parking brake firmly and shift into “P” (Park) if your vehicle has an automatic transaxle, or shift into “R” (Reverse) if your vehicle has a manual transaxle.

⚠ WARNING

- **Be sure to shift into “P” (Park) for an automatic transaxle vehicle, or into “R” (Reverse) for a manual transaxle vehicle when you jack up the vehicle.**
- **Never jack up the vehicle with the transaxle in “N” (Neutral). Otherwise, an unstable jack may cause an accident.**

3) Turn on the hazard warning flasher if your vehicle is near traffic.
4) Block the front and rear of the wheel diagonally opposite of the wheel being lifted.
5) Place the spare wheel near the wheel being lifted as shown in the illustration in case that the jack slips.

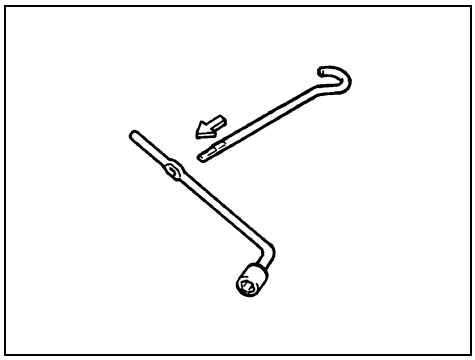

54G253

Downloaded from www.Manualslib.com manuals search engine

Jacking Instructions: 5

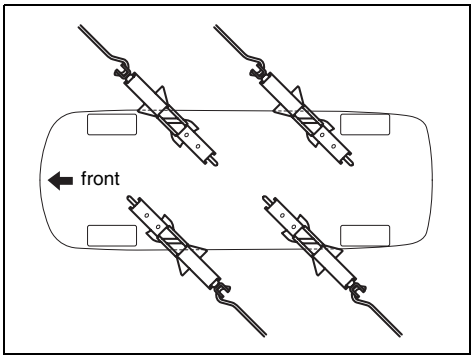

80J085

6) Position the jack at an angle as shown in the illustration and raise the jack by turning the jack handle clockwise until the jack-head groove fits around the jacking bar beneath the vehicle body.
7) Continue to raise the jack slowly and smoothly until the tire clears the ground. Do not raise the vehicle more than necessary.

⚠ WARNING

- **Use the jack only to change wheels.**
- **Never jack up the vehicle on an inclined surface.**
- **Never raise the vehicle with the jack in a location other than the specified jacking point (shown in the illustration) near the wheel to be changed.**
- **Make sure that the jack is raised at least 51 mm (2 inches) before it contacts the flange. Use of the jack when it is within 51 mm (2 inches) of being fully collapsed may result in failure of the jack.**
- **Never get under the vehicle when it is supported by the jack.**
- **Never run the engine when the vehicle is supported by the jack and never allow passengers to remain in the vehicle.**

Front wheel

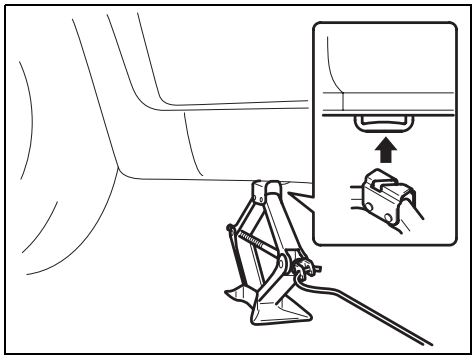

80J086

Rear wheel

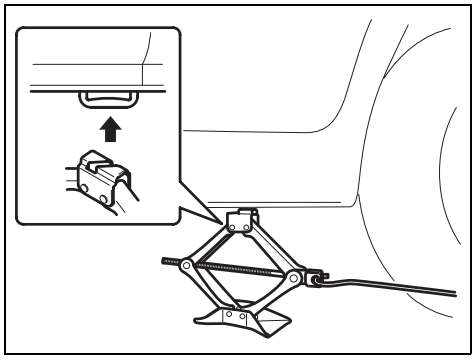

80J087

Downloaded from www.Manualslib.com manuals search engine

EMERGENCY SERVICE

Jump Starting Instructions

⚠ WARNING

- **Never attempt to jump start your vehicle if the battery appears to be frozen. Batteries in this condition may explode or rupture if jump starting is attempted.**
- **When making jumper cable connections, be certain that your hands and the jumper cables remain clear from pulleys, belts or fans.**
- **Batteries produce flammable hydrogen gas. Keep flames and sparks away from the battery or an explosion may occur. Never smoke when working near the battery.**
- **If the booster battery you use for jump starting is installed in another vehicle, make sure the two vehicles are not touching each other.**
- **If your battery discharges repeatedly, for no apparent reason, have your vehicle inspected by an authorized SUZUKI dealer.**
- **To avoid harm to yourself or damage to your vehicle or battery, follow the jump starting instructions below precisely and in order. If you are in doubt, call for qualified road service.**

CAUTION

Your vehicle should not be started by pushing or towing. This starting method could result in permanent damage to the catalytic converter. Use jumper cables to start a vehicle with a weak or run-down battery.

When jump starting your vehicle, use the following procedure:

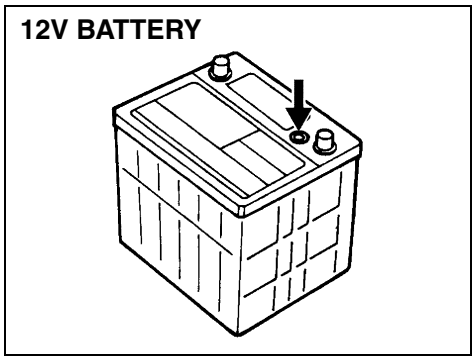

60A269

1) Use only a 12 volt battery to jump start your vehicle. Position the good 12V battery close to your vehicle so that the jumper cables will reach both batteries. When using a battery installed on another vehicle, DO NOT LET THE VEHICLES TOUCH. Set the parking brakes fully on both vehicles.
2) Turn off all vehicle accessories, except those necessary for safety reasons (for example, headlights or hazard lights).

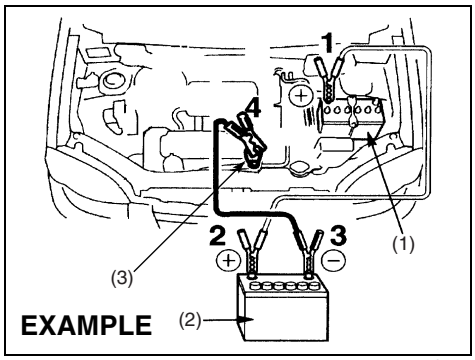

54G079

3) Make jumper cable connections as follows:
   1. Connect one end of the first jumper cable to the positive (+) terminal of the discharged battery (1).
   2. Connect the other end to the positive (+) terminal of the booster battery (2).
   3. Connect one end of the second jumper cable to the negative (–) terminal of the booster battery (2).
   4. Make the final connection to an unpainted, heavy metal part (i.e. engine hook (3)) of the engine of the vehicle with the discharged battery (1).

Downloaded from www.Manualslib.com manuals search engine

Jacking Instructions: 5
Jump Starting Instructions: 7

⚠ WARNING

Never connect the jumper cable directly to the negative (–) terminal of the discharged battery, or an explosion may occur.

4) If the booster battery you are using is installed on another vehicle, start the engine of the vehicle with the booster battery. Run the engine at moderate speed.
5) Start the engine of the vehicle with the discharged battery.
6) Remove the jumper cables in the exact reverse order in which you connected them.

Towing a Disabled Vehicle

Emergency Towing

If your vehicle is disabled, it may be towed by a tow truck using one of the following methods:

1) Tow the vehicle with two wheels lifted by the tow truck and the other two wheels on a towing dolly.
2) Use the appropriate towing method specified for your vehicle in the "Towing Your Vehicle (recreational towing)" section, but with the wheels lifted by the tow truck instead of on a towing dolly. Be sure to carefully follow the specific instructions provided in the "Towing Your Vehicle (recreational towing)" section.

CAUTION

If vehicle damage (such as steering or drivetrain damage, etc.) prevents normal use of the towing procedures for your vehicle described in the "Towing Your Vehicle (recreational towing)" section, have your vehicle towed with two wheels lifted by the tow truck and the other two wheels on a towing dolly.

If the Starter Does Not Operate

1) Try turning the ignition switch to the "START" position with the headlights turned on to determine the battery condition. If the headlights go excessively dim or go off, it usually means that either the battery has run down or battery terminal contact is poor. Recharge the battery or correct battery terminal contact if necessary.
2) If the headlights remain bright, check the fuses. If the reason for failure of the starter is not obvious, there may be a major electrical problem. Have the vehicle inspected by your authorized SUZUKI dealer.

Downloaded from www.Manualslib.com manuals search engine

Jump Starting Instructions: 7
Towing a Disabled Vehicle: 6

If the Engine is Flooded

If the engine is flooded with gasoline, it may be hard to start. If this happens, press the accelerator pedal all the way to the floor and hold it there while cranking the engine. (Do not operate the starter motor for more than 15 seconds).

If the Engine Overheats

The engine could overheat temporarily under severe driving conditions. If the High Engine Coolant Temperature Warning Light in the instrument cluster glows red during driving:

1) Turn off the air conditioner, if equipped.
2) Take the vehicle to a safe place and park.
3) Let the engine run at the normal idle speed for a few minutes until the engine is cooled down to the normal temperature.
   You can determine the engine temperature is normal by either condition below:
   – Both High Engine Coolant Temperature Warning Light and Low Engine Coolant Temperature Light have gone off.
   – Low Engine Coolant Temperature Light is lit in blue, and High Engine Coolant Temperature Warning Light has gone off.

See “High Engine Coolant Temperature Warning Light” and “Low Engine Coolant Temperature Light” in the INDEX for further information.

⚠ WARNING

If you see or hear escaping steam, stop the vehicle in a safe place and immediately turn off the engine to let it cool. Do not open the hood when steam is present. When the steam can no longer be seen or heard, open the hood to see if the coolant is still boiling. If it is, you must wait until it stops boiling before you proceed. Also, be careful not to touch hot engine parts (radiator, water hoses, engine etc.).

Downloaded from www.Manualslib.com manuals search engine

If the Starter Does Not Operate: 2, 9
If the Engine is Flooded: 2, 9
If the Engine Overheats: 2, 9

If the temperature indication does not return to the normal condition:

1) Turn off the engine and check that the water pump belt and pulleys are not damaged or slipping. If any abnormality is found, correct it.
2) Check the coolant level in the reservoir. If it is found to be lower than the "LOW" line, look for leaks at the radiator, water pump and radiator and heater hoses. If you locate any leaks that may have caused the overheating, do not run the engine until these problems have been corrected.
3) If you do not find a leak, carefully add coolant to the reservoir and then the radiator, if necessary. (Refer to "Engine Coolant" in the "INSPECTION AND MAINTENANCE" section.)

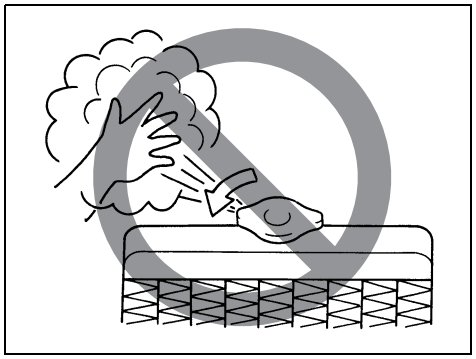

65D614

⚠ WARNING

- **It is hazardous to remove the radiator cap when the water temperature is high, because scalding fluid and steam may be blown out under pressure. The cap should only be taken off when the coolant temperature has lowered.**
- **To prevent personal injury, keep hands, tools and clothing away from the engine cooling fan and air-conditioner fan (if equipped). These electric fans can automatically turn on without warning.**

If You Can Not Shift Automatic Transaxle Gearshift Lever Out of "P" (PARK)

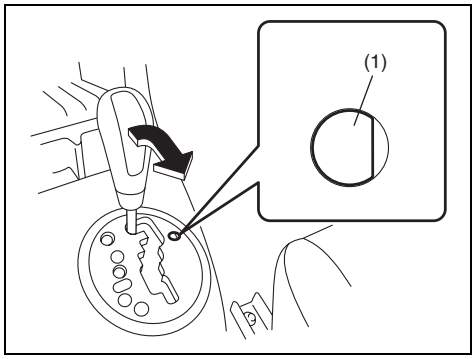

62J083

Vehicles with an automatic transaxle have an electrically operated park-lock feature. If the vehicle's battery is discharged, or there is some other electrical failure, the automatic transaxle cannot be shifted out of Park in the normal way. Jump starting may correct the condition. If not, follow the procedure described below. This procedure will permit changing the transaxle out of Park.

1) Be sure the parking brake is firmly applied.
2) If the engine is running, stop the engine.

Downloaded from www.Manualslib.com manuals search engine

EMERGENCY SERVICE

3) Make sure the key is in the “ON” or “ACC” position.
4) Remove the cover (1) over the button.
5) With pushing the release button by the key or the flat end rod, shift the gear-shift lever to the desired position.

This procedure is for emergency use only. If repeated use of this procedure is necessary, or the procedure does not work as described, take the vehicle to your dealer for repair.

Downloaded from www.Manualslib.com manuals search engine

APPEARANCE CARE

Corrosion Prevention 11-1
Vehicle Cleaning 11-3

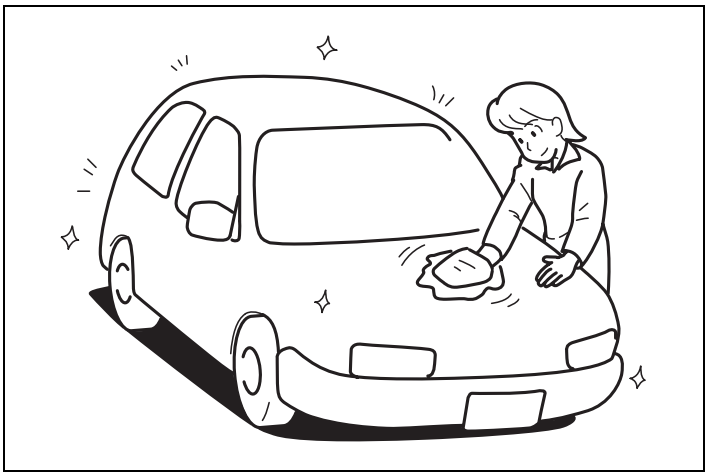

60G412

Downloaded from www.Manualslib.com manuals search engine

Corrosion Prevention

It is important to take good care of your vehicle to protect it from corrosion.

Listed below are instructions for how to maintain your vehicle to prevent corrosion. Please read and follow these instructions carefully.

Important Information About Corrosion

Common causes of corrosion

1) Accumulation of road salt, dirt, moisture or chemicals in hard to reach areas of the vehicle underbody or frame.
2) Chipping, scratches and any damage to treated or painted metal surfaces resulting from minor accidents or impact from stones and gravel.

Environmental conditions which accelerate corrosion

1) Road salt, dust control chemicals, sea air or industrial pollution will all accelerate the corrosion of metal.
2) High humidity will increase the rate of corrosion particularly when the temperature range is just above the freezing point.
3) Moisture in certain areas of a vehicle for an extended period of time may promote corrosion even though other body sections may be completely dry.
4) High temperatures will cause an accelerated rate of corrosion to parts of the vehicle which are not well ventilated to permit quick drying.

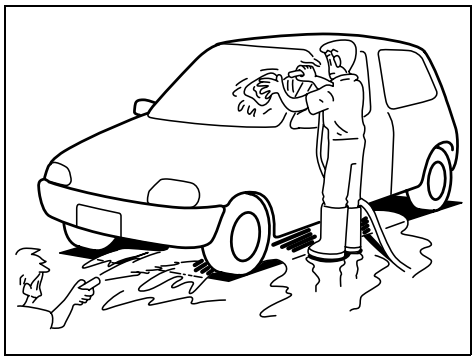

52D151

This information illustrates the necessity of keeping your vehicle (particularly the underbody) as clean and dry as possible. It is equally important to repair any damage to the paint or protective coatings as soon as possible.

How to Help Prevent Corrosion

Wash your vehicle frequently

The best way to preserve the finish on your vehicle and to help avoid corrosion is to keep it clean with frequent washing.

Wash your vehicle at least once during the winter and once immediately after the winter. Keep your vehicle, particularly the underside, as clean and dry as possible.

If you frequently drive on salted roads, your vehicle should be washed at least once a month during the winter. If you live near the ocean, your vehicle should be washed at least once a month throughout the year.

For washing instructions, refer to the “Vehicle Cleaning” section.

Remove foreign material deposits

Foreign material such as salts, chemicals, road oil or tar, tree sap, bird droppings and industrial fall-out may damage the finish of your vehicle if it is left on painted surfaces. Remove these types of deposits as quickly as possible. If these deposits are difficult to wash off, an additional cleaner may be required. Be sure that any cleaner you use is not harmful to painted surfaces and is specifically intended for your purposes. Follow the manufacturer’s directions when using these special cleaners.

Repair finish damage

Carefully examine your vehicle for damage to the painted surfaces, especially if it is used off-road. Should you find any chips or scratches in the paint, touch them up immediately to prevent corrosion from starting. If the chips or scratches have gone through to the bare metal, have a qualified body shop make the repair.

Downloaded from www.Manualslib.com manuals search engine

Corrosion Prevention:

Keep passenger and cargo compartments clean
Moisture, dirt or mud can accumulate under the floor mats and may cause corrosion. Occasionally, check under these mats to ensure that this area is clean and dry. More frequent checks are necessary if the vehicle is used off road or in wet weather.

Certain cargo such as chemicals, fertilizers, cleaners, salts, etc. are extremely corrosive by nature. These products should be transported in sealed containers. If a spill or leak does occur, clean and dry the area immediately.

Use the body trim
The use of the body trim will help protect your vehicle, especially if you frequently drive on gravel or salted roads. The fittings for such guards should also be corrosion resistant. Please check with your authorized SUZUKI dealer for information on these guards.

Store your vehicle in a dry, well-ventilated area
Do not park your vehicle in a damp, poorly ventilated area. If you often wash your vehicle in the garage or if you frequently drive it in when wet, your garage may be damp. The high humidity in the garage may cause or accelerate corrosion. A wet vehicle may corrode even in a heated garage if the ventilation is poor.

⚠ WARNING

Do not apply additional undercoating or rust preventive coating on or around exhaust system components such as the catalytic converter, exhaust pipes, etc. A fire could be started if the undercoating substance becomes overheated.

Cover your vehicle

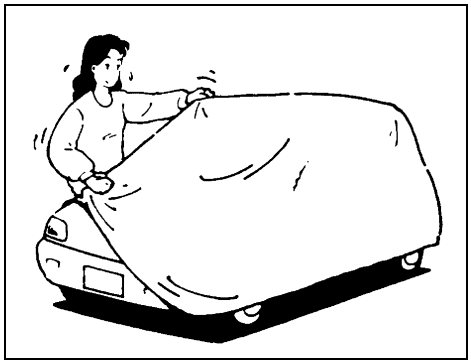

50G203

If you can not regularly park your vehicle in a garage, we recommend you use a vehicle cover. Years of exposure to midday sun can cause the colors in paint, plastic parts and fabrics to fade. Covering your vehicle with a high-quality, “breathable” vehicle cover can help protect the finish from the harmful UV rays in sunlight, and can reduce the amount of dust and air pollution reaching the surface. Your SUZUKI dealer can help you select the right cover for your vehicle.

Downloaded from www.Manualslib.com manuals search engine

Vehicle Cleaning

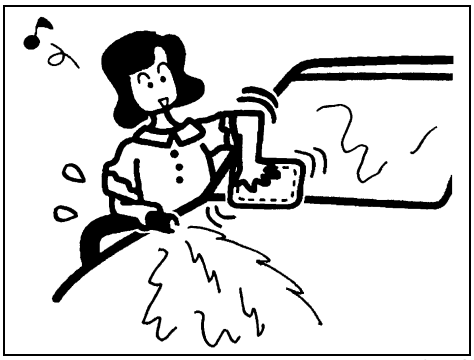

76G044S

⚠ WARNING

When cleaning the interior or exterior of the vehicle, NEVER USE flammable solvents such lacquer thinners, gasoline, benzene or cleaning materials such as bleaches and strong household detergents. The materials could cause personal injury or damage to the vehicle.

Cleaning Interior

Vinyl upholstery
Prepare a solution of soap or mild detergent mixed with warm water. Apply the solution to the vinyl with a sponge or soft cloth and let it soak for a few minutes to loosen dirt. Rub the surface with a clean, damp cloth to remove dirt and the soap solution. If some dirt still remains on the surface, repeat this procedure.

Fabric upholstery
Remove loose dirt with a vacuum cleaner. Using a mild soap solution, rub stained areas with a clean damp cloth. To remove soap, rub the areas again with a cloth dampened with water. Repeat this until the stain is removed, or use a commercial fabric cleaner for tougher stains. If you use a fabric cleaner, carefully follow the manufacturer's instructions and precautions.

Leather upholstery
Remove loose dirt with a vacuum cleaner. Using a mild soap or saddle soap solution, wipe dirt off with a clean damp soft cloth. To remove soap, wipe the areas again with a soft cloth dampened with water. Wipe the areas dry with a soft dry cloth. Repeat this until the dirt or stain is removed, or use a commercial leather cleaner for tougher dirt or stains. If you use a leather cleaner, carefully follow the manufacture's instructions and precautions. Do not use solvent type cleaners or abrasive cleaners.

Seat belts
Clean seat belts with a mild soap and water. Do not use bleach or dye on the belts. They may weaken the fabric in the belts.

Vinyl floor mats
Ordinary dirt can be removed from vinyl with water or mild soap. Use a brush to help loosen dirt. After dirt is loosened, rinse the mat thoroughly with water and dry it in the shade.

Carpets
Remove dirt and soil as much as possible with a vacuum cleaner. Using a mild soap solution, rub stained areas with a clean damp cloth. To remove soap, rub the areas again with a cloth dampened with water. Repeat this until the stain is removed, or use a commercial carpet cleaner for tougher stains. If you use a carpet cleaner, carefully follow the manufacturer's instructions and precautions.

Cleaning the Exterior

CAUTION

It is important that your vehicle be kept clean and free from dirt. Failure to keep your vehicle clean may result in fading of the paint or corrosion to various parts of the vehicle body.

Downloaded from www.Manualslib.com manuals search engine

Vehicle Cleaning:

Washing

⚠ WARNING

- **Never attempt to wash and wax your vehicle with the engine running.**
- **When cleaning the underside of the body and fender, where there may be sharp-edged parts, you should wear gloves and a long-sleeved shirt to protect your hands and arms from being cut.**
- **After washing your vehicle, carefully test the brakes before driving to make sure they have maintained their normal effectiveness.**

When washing the vehicle, follow the instructions below:

1) Flush the underside of body and wheel housings with pressurized water to remove mud and debris. Use plenty of water.

CAUTION

- **When washing the vehicle, avoid directing steam or hot water of more than 80°C (176°F) on plastic parts.**
- **To avoid damaging engine components, do not use pressurized water in the engine compartment.**

2) Rinse the body to loosen the dirt. Remove dirt and mud from the body exterior with running water. You may use a soft sponge or brush. Do not use hard materials which can scratch the paint or plastic. Remember that the headlight covers or lenses are made of plastic in many cases.

CAUTION

To avoid damage to the paint or plastic surface, do not wipe the dirt off without ample water. Be sure to follow above procedure.

3) Wash the entire exterior with a mild detergent or car wash soap using a sponge or soft cloth. The sponge or cloth should be frequently soaked in the soap solution.

CAUTION

When using a commercial car wash product, observe the cautions specified by the manufacturer. Never use strong household detergents or soaps.

4) Once the dirt has been completely removed, rinse off the detergent with running water.
5) After rinsing, wipe off the vehicle body with a wet chamois or cloth and allow it to dry in the shade.
6) Check carefully for damage to painted surfaces. If there is any damage, “touch-up” the damage following the procedure below:
   1. Clean all damaged spots and allow them to dry.
   2. Stir the paint and “touch-up” the damaged spots lightly using a small brush.
   3. Allow the paint to dry completely.

CAUTION

If you use an automatic car wash, make sure that your vehicle’s body parts, such as spoilers, can not be damaged. If you are in doubt, consult the car wash operator for advice.

Downloaded from www.Manualslib.com manuals search engine

APPEARANCE CARE

Waxing

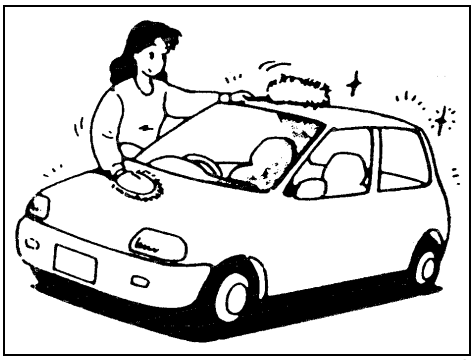

60B211S

After washing the vehicle, waxing and polishing are recommended to further protect and beautify the paint.

- Only use waxes and polishes of good quality.
- When using waxes and polishes, observe the precautions specified by the manufacturers.

Downloaded from www.Manualslib.com manuals search engine

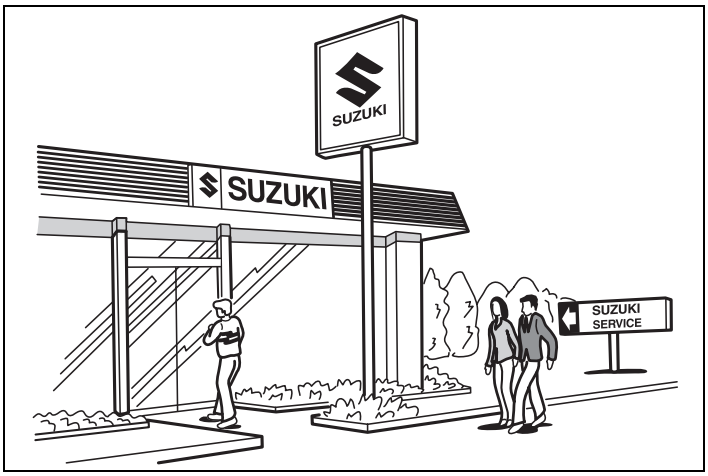

54G072

GENERAL INFORMATION

Identification Numbers 12-1
Safety Certification Label 12-2
Emission Compliance Label (for U.S.A.) 12-2
Warranties 12-2
On-Board Vehicle Computers and Event Data Recorders 12-3
Reporting Safety Defects 12-4

Downloaded from www.Manualslib.com manuals search engine

GENERAL INFORMATION

Identification Numbers

Vehicle Identification Number

EXAMPLE (for some vehicles)

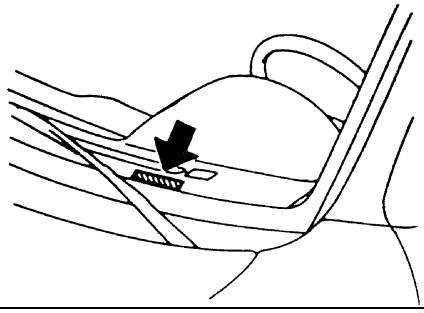

60G152

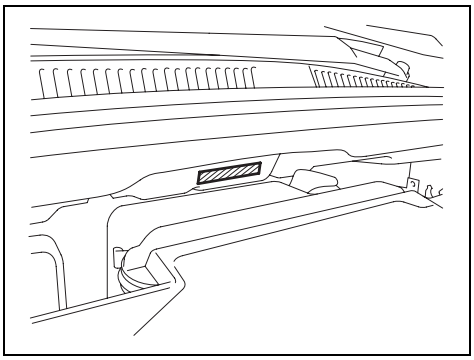

79J019

The Vehicle Identification Number (VIN) may be found in the location shown in the above illustrations. This number is used to register the vehicle. It is also used to assist your dealer when ordering parts or referring to special service information.

Engine Serial Number

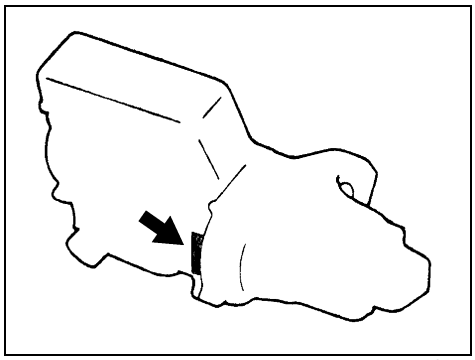

60G128

The engine serial number is stamped on the cylinder block as shown in the above illustration.

Downloaded from www.Manualslib.com manuals search engine

Safety Certification Label: 6
Emission Compliance Label (For U.S.A.): 1, 2
Warranties: NO

Safety Certification Label

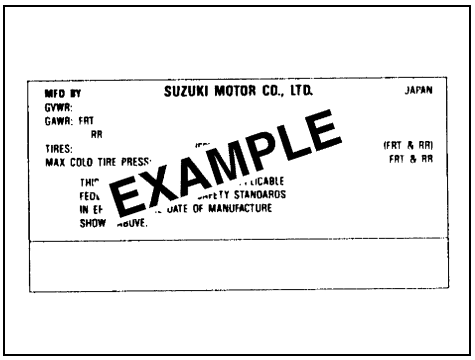

52D059

This label contains important safety-related information about your vehicle. The label is located on the driver's door lock pillar.

Emission Compliance Label (for U.S.A.)

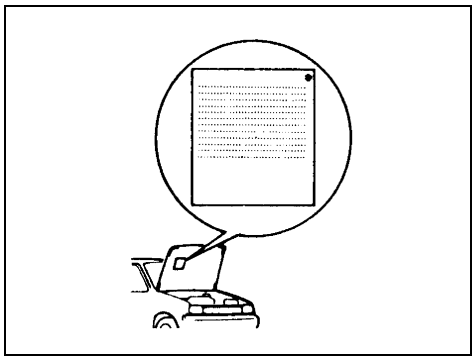

60A412

The EPA emission compliance label is located under the hood.

Warranties

The warranties covering your vehicle are explained in a separate New Vehicle Warranty Information booklet given to you at the time of sale. Please read this booklet carefully so you can understand your rights and responsibilities.

For U.S.A.

The following warranties are provided with your vehicle:

- New Vehicle Limited Warranty
- Limited Warranty For SUZUKI Parts or Accessories
- Emission Components Defect Warranty
- Emission Performance Warranty

Downloaded from www.Manualslib.com manuals search engine

On-Board Vehicle Computers and Event Data Recorders

Your vehicle is equipped with on-board computer systems which monitor and control several aspects of vehicle performance, including the following:

- Emission-related components and engine parameters such as engine speed and throttle position are monitored to provide emissions control and to provide optimum fuel economy. Your vehicle also has an on-board diagnostic system which monitors and records information about emission-related malfunctions.
- Signals from various sensors are monitored to provide air bag deployment.
- If your vehicle is equipped with antilock brakes, conditions such as vehicle speed and brake performance are monitored, so that the ABS system can provide effective antilock braking. If your vehicle has an Electronic Stability Program (ESP®) system, conditions such as yaw rate, lateral acceleration, and brake fluid pressure are monitored, so that the ESP® system can help the driver control the vehicle in difficult driving situations.

Some information may be stored by the on-board computers during normal operation of the vehicle. This stored information can assist technicians in repairing the vehicle when malfunctions occur. Other information is stored only in the event of crash, by computer systems that are commonly called Event Data Recorders (EDRs).

In a crash event, EDRs such as the Airbag Sensing and Diagnostic Module (SDM) in your vehicle may record information about the condition of the vehicle and how it was operated, such as data related to airbag readiness, airbag performance, safety belt usage, and the severity of the collision. These data can help provide a better understanding of the circumstances in which crashes and injuries occur and lead to the designing of safer vehicles. The SDM in your vehicle does not collect or store personal information.

To read the stored information, special equipment is needed and access to the vehicle or storage device is required. SUZUKI will not access information about a crash event or share it with others other than with the consent of the vehicle owner or lessee, in response to an official request from the police or similar government office, as part of SUZUKI's defense of litigation through the discovery process, or as required by law.

In addition, once SUZUKI collects or receives data, SUZUKI may use the data for research conducted by SUZUKI, make the data available for outside research if need is shown and confidentiality is assured, or make summary data which does not identify specific vehicles available for outside research.

Others, such as law enforcement personnel, may have access to the special equipment that can read the information if they have access to the vehicle or storage device.

Downloaded from www.Manualslib.com manuals search engine

Reporting Safety Defects

If you believe that your vehicle has a defect which could cause a crash or could cause injury or death, you should immediately inform the National Highway Traffic Safety Administration (NHTSA) in addition to notifying American Suzuki Motor Corp.

If NHTSA receives similar complaints, it may open an investigation, and if it finds that a safety defect exists in a group of vehicles, it may order a recall and remedy campaign. However, NHTSA cannot become involved in individual problems between you, your dealer, or American Suzuki Motor Corp.

To contact NHTSA, you may call the Vehicle Safety Hotline toll-free at 1-888-327-4236 (TTY: 1-800-424-9153); go to http://www.safercar.gov; or write to: Administrator, NHTSA, 400 Seventh Street, SW., Washington, D.C. 20590. You can also obtain other information about motor vehicle safety from http://www.safercar.gov.

To contact American Suzuki, owners in the continental United States can call toll-free 1-800-934-0934, or write to:

American Suzuki Motor Corporation
Automotive Customer Relations
3251 East Imperial Highway
Brea, CA 92821-6795

For owners outside the continental United States, please refer to the distributor's address listed in your Warranty Information booklet.

For vehicles registered for use and principally operated in Canada please contact Suzuki Canada Inc. at 1-905-889-2677 extension 2254 or write to:

Suzuki Canada Inc.
Customer Relations
100 East Beaver Creek Road
Richmond Hill, On
L4B 1J6

Downloaded from www.Manualslib.com manuals search engine

MEMO

Downloaded from www.Manualslib.com manuals search engine

FUSES AND PROTECTED CIRCUITS

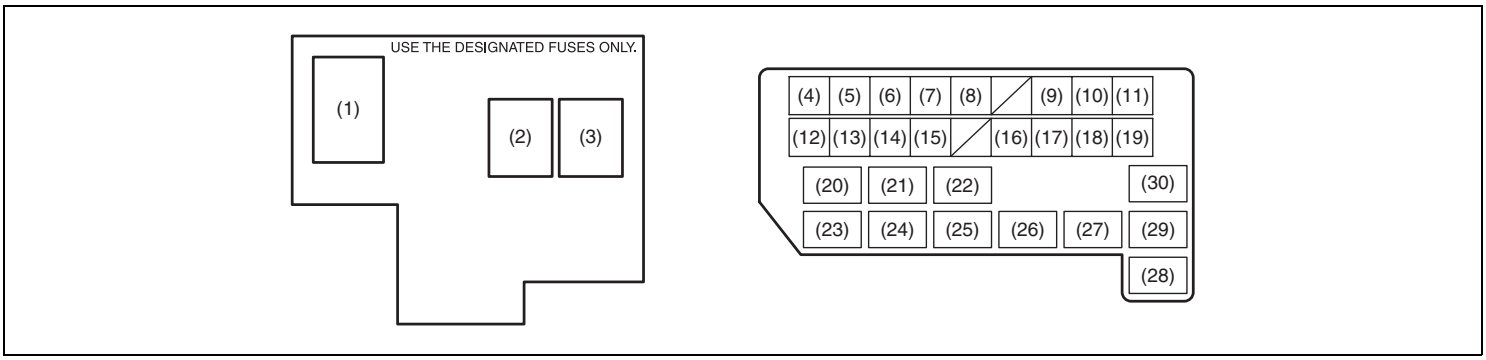

80J101

		COLOR/SIZE (AMPS)	PROTECTED CIRCUIT	
MAIN FUSE BOX	(1)	BLACK (80)	All electric load	In engine compartment
	(2)	RED (50)	Power window, Ignition, Wiper, Starter	
	(3)	RED (50)	Tail light, Rear defogger, Door lock, Hazard/Horn, Dome	
	(4)	–	Blank	
	(5)	–	Blank	
	(6)	BLUE (15)	Head light (Right) fuse	
	(7)	BLUE (15)	Head light (Left) fuse	
	(8)	YELLOW (20)	Front fog light fuse	
	(9)	–	Blank	
	(10)	GREEN (40)	ABS control module fuse	

Downloaded from www.Manualslib.com manuals search engine

FUSES AND PROTECTED CIRCUITS

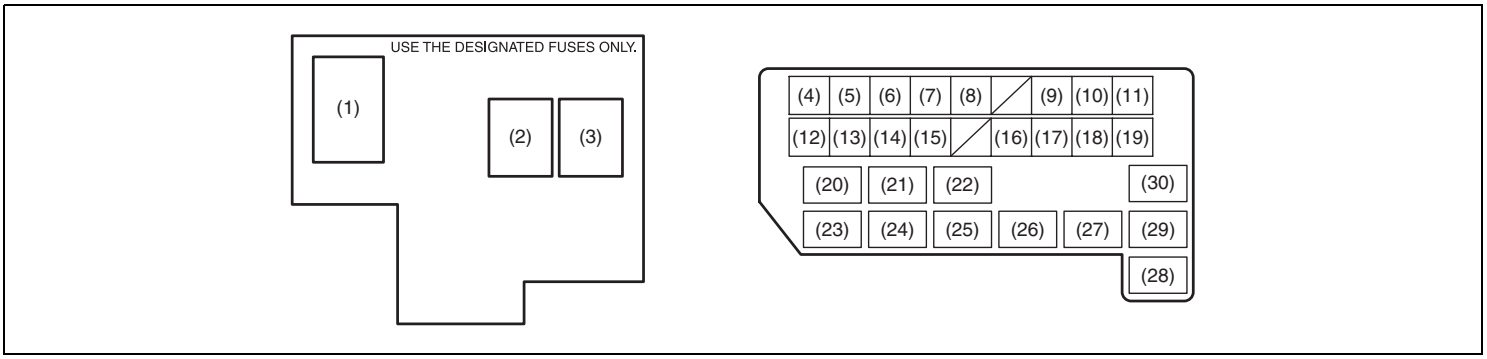

80J101

		COLOR/SIZE (AMPS)	PROTECTED CIRCUIT	
MAIN FUSE BOX	(11)	PINK (30)	Radiator fan fuse	In engine compartment
	(12)	PINK (30)	ABS control module fuse	
	(13)	PINK (30)	Starting motor fuse	
	(14)	RED (50)	Ignition switch fuse	
	(15)	PINK (30)	Blower fan fuse	
	(16)	YELLOW (20)	Air compressor fuse	
	(17)	BLUE (15)	Throttle motor fuse	
	(18)	BLUE (15)	Automatic transaxle fuse	
	(19)	BLUE (15)	Fuel injection fuse	
	(20)	–	Automatic transaxle relay	

Downloaded from www.Manualslib.com manuals search engine

FUSES AND PROTECTED CIRCUITS

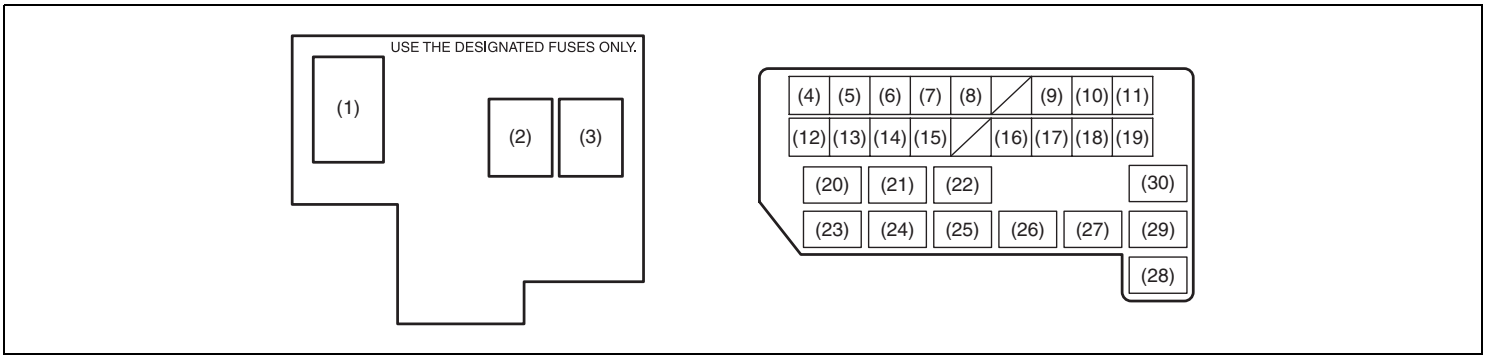

80J101

		COLOR/SIZE (AMPS)	PROTECTED CIRCUIT	
MAIN FUSE BOX	(21)	–	Air compressor relay	In engine compartment
	(22)	–	Fuel pump relay	
	(23)	–	Condensor fan relay	
	(24)	–	Front fog light relay	
	(25)	–	Throttle motor relay	
	(26)	–	FI MAIN	
	(27)	–	Starting motor relay	
	(28)	–	Radiator fan relay	
	(29)	–	Radiator fan relay 2	
	(30)	–	Radiator fan relay 3	

Downloaded from www.Manualslib.com manuals search engine

FUSES AND PROTECTED CIRCUITS

SX4

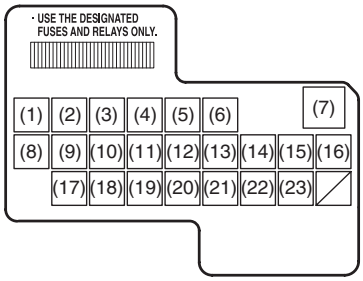

80J053

		COLOR/SIZE (AMPS)	FUSE NAME	PROTECTED CIRCUIT	
FUSE BOX	(1)	BLUE (15)	RR WIP	Rear wiper	Under the dashboard
	(2)	BLUE (15)	IG COIL	Ignition coil	
	(3)	RED (10)	BACK	Back-up light	
	(4)	RED (10)	MTR	Meter	
	(5)	BLUE (15)	ACC	Accessory	
	(6)	BLUE (15)	ACC2	Accessory 2	
	(7)	PINK (30)	P/W	Power window	
	(8)	GREEN (30)	WIP	Wiper	
	(9)	RED (10)	IG1 SIG	IG1 SIG	
	(10)	BLUE (15)	A/B	Air bag	
	(11)	RED (10)	ABS	Anti-lock brake system	

Downloaded from www.Manualslib.com manuals search engine

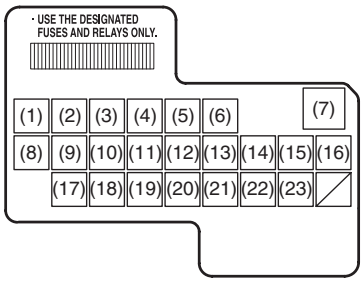

80J053

		COLOR/SIZE (AMPS)	FUSE NAME	PROTECTED CIRCUIT	
FUSE BOX	(12)	BLUE (15)	4WD	4WD	Under the dashboard
	(13)	BLUE (15)	STOP	Stop light	
	(14)	YELLOW (20)	D/L	Door lock	
	(15)	–	–	Blank	
	(16)	RED (10)	ST SIG	ST SIG	
	(17)	BLUE (15)	S/H	Seat heater	
	(18)	RED (10)	IG2 SIG	IG2 SIG	
	(19)	RED (10)	TAIL	Tail light	
	(20)	BLUE (15)	DOME	Dome	
	(21)	GREEN (30)	RR DEF	Rear defogger	
	(22)	BLUE (15)	HORN HAZ	Horn/Hazard	
	(23)	BLUE (15)	AUDIO	Audio	

Downloaded from www.Manualslib.com manuals search engine

FUSES AND PROTECTED CIRCUITS

SX4 SEDAN

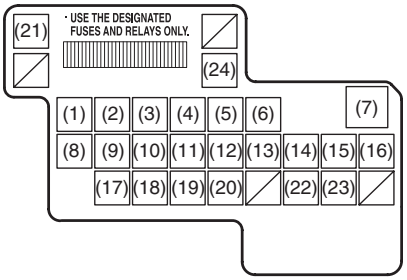

80JC003

		COLOR/SIZE (AMPS)	FUSE NAME	PROTECTED CIRCUIT	
FUSE BOX	(1)	BLUE (15)	RR WIP	Rear wiper	Under the dashboard
	(2)	BLUE (15)	IG COIL	Ignition coil	
	(3)	RED (10)	BACK	Back-up light	
	(4)	RED (10)	MTR	Meter	
	(5)	BLUE (15)	ACC	Accessory	
	(6)	BLUE (15)	ACC2	Accessory 2	
	(7)	PINK (30)	P/W	Power window	
	(8)	GREEN (30)	WIP	Wiper	
	(9)	RED (10)	IG1 SIG	IG1 SIG	
	(10)	BLUE (15)	A/B	Air bag	
	(11)	RED (10)	ABS	Anti-lock brake system	
	(12)	–	–	Blank	

Downloaded from www.Manualslib.com manuals search engine

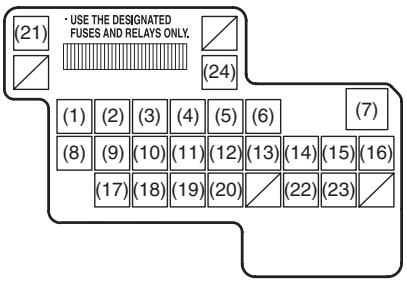

80JC003

		COLOR/SIZE (AMPS)	FUSE NAME	PROTECTED CIRCUIT	
FUSE BOX	(13)	BLUE (15)	STOP	Stop light	Under the dashboard
	(14)	YELLOW (20)	D/L	Door lock	
	(15)	–	–	Blank	
	(16)	RED (10)	ST SIG	ST SIG	
	(17)	BLUE (15)	S/H	Seat heater	
	(18)	RED (10)	IG2 SIG	IG2 SIG	
	(19)	RED (10)	TAIL	Tail light	
	(20)	BLUE (15)	DOME	Dome	
	(21)	GREEN (30)	RR DEF	Rear defogger	
	(22)	BLUE (15)	HORN HAZ	Horn/Hazard	
	(23)	BLUE (15)	AUDIO	Audio	
	(24)	GREEN (30)	RR DEF	Rear defogger	

Downloaded from www.Manualslib.com manuals search engine

MEMO

Downloaded from www.Manualslib.com manuals search engine

Specifications: 1, 2, 5, 6, 7, 10, 11

SPECIFICATIONS

NOTE:
Specifications are subject to change without notice.

M/T: Manual transaxle
A/T: Automatic transaxle

2WD: 2-wheel drive
i-AWD: intelligent All Wheel Drive

ITEM: Dimensions		UNIT: mm (in.)	SX4	SX4 SEDAN
Overall length			4115 – 4135 (162.0 – 162.8)	4490 – 4510 (176.8 – 177.6)
Overall width			1730 – 1755 (68.1 – 69.1)	1730 (68.1)
Overall height	2WD	195 tire	1575 (62.0)	1545 (60.8)
	2WD/i-AWD	205 tire	1605 (63.2)	1545 (60.8)
Wheelbase			2500 (98.4)	←
Track	front	2WD	1500 (59.1)	←
		i-AWD	1500 (59.1)	–
	rear		1495 (58.9)	←
Ground clearance		195 tire	165 (6.5)	←
		205 tire	175 (6.9)	160 (6.3)

ITEM: Weight	
Gross axle weight rating	See the safety certification label and the tire information label which are located on the driver's door lock pillar.
Gross vehicle weight rating	
Vehicle capacity weight	

Downloaded from www.Manualslib.com manuals search engine

SPECIFICATIONS

ITEM: Engine	
Type	J20A (16V DOHC)
Number of cylinders	4
Bore	84.0 mm (3.31 in.)
Stroke	90.0 mm (3.54 in.)
Piston displacement	1995 cm^3 (1995cc, 121.7 cu.in)
Compression ratio	10.5 : 1

ITEM: Electrical	
Ignition timing	3° – 17° B.T.D.C. at idle speed
Standard spark plug	NGK **IFR5J11**
Battery	GP24 12V
Fuses	See “INSPECTION AND MAINTENANCE” and “FUSES AND PROTECTED CIRCUITS” sections.

Downloaded from www.Manualslib.com manuals search engine

Specifications: 1, 2, 5, 6, 7, 10, 11

SPECIFICATIONS

ITEM: Light		WATTAGE	BULB No.
Headlight		12V 65/55W	HB5
Front fog light		12V 55W	H11
Front turn signal light		12V 21W	WY21W
Rear turn signal light		12V 21W	WY21W
Parking light		12V 5W	W5W
Brake/tail light		12V 21/5W	W21/5W
License plate light		12V 5W	W5W
Reversing light		12V 21W	W21W
Dome light		12V 10W	–
Luggage compartment light		12V 5W	–
Spot light		12V 8W	–
High mount stop light	SX4	12V 5W	W5W
	SX4 SEDAN	12V18W	W16W
Side marker light		12V 5W	W5W

Downloaded from www.Manualslib.com manuals search engine

SPECIFICATIONS

ITEM: Wheel		
Tire size, front and rear	SX4	P195/65R15, P205/60R16
	SX4 SEDAN	P195/65R15, P205/50R17
Tire pressure		For the specified tire pressure, see the Tire Information Label located on the driver's door lock pillar.

ITEM: Steering		
Toe	IN 1.0 ± 1.0 mm (0.0393 ± 0.0393 in.)	
Camber angle	P195/65R15, P205/60R16, P195/65R15	–0° 10' ± 1°
	P205/50R17	–0° 17' ± 1°
Caster angle	P195/65R15, P205/60R16, P195/65R15	3° 40' ± 2°
	P205/50R17	3° 46' ± 2°

ITEM: Capacities		
Coolant (including reserve tank)	M/T	7.0 L (14.8 US pt)
	A/T	7.5 L (15.8 US pt)
Fuel tank	2WD	50 L (13.2 US gal)
	i-AWD	45 L (11.9 US gal)
Engine oil (replaced with filter)		4.5 L (4.7 quarts)
Transaxle oil		Manual transaxle: 2.5 L (5.3 US pt)
		4-speed automatic transaxle: 7.3 L (15.4 US pt)
Rear differential oil		0.8 L (1.7 US pt)
Transfer gear box oil		0.6 L (1.2 US pt)

Downloaded from www.Manualslib.com manuals search engine

INDEX

Symbols

"CRUISE" Indicator Light 4-8
"ESP OFF" Indicator Light 4-6, 6-14
"ESP OFF" Switch 4-13
"ESP" (Electronic Stability Program) Warning Light 4-5
"ESP" Warning Light 6-13
"PASS AIRBAG OFF" Indicator 4-20
"SET" Indicator Light 4-8

Numerics

2WD/i-AWD (intelligent All Wheel Drive) Switch 4-14
4-Speed Automatic Transaxle 6-5

A

A/T Selector Position Indicator 4-10
Accelerator Pedal 5-2
Accessory Socket 5-11
Adding Coolant 9-18
Adjusting Seat Position 2-20
Adjusting Seatbacks 2-20
AIR BAG Light 4-7
Air Cleaner 9-19
Air Conditioning System 9-48
All Seat Belts 2-25
Anti-Lock Brake System (ABS) 6-10
Anti-Lock Brake System (ABS) Warning Light 4-5
Anti-Lock Braking System (ABS) 6-12
Assist Grips 5-9
Audio Systems 4-32
Automatic Heating and Air Conditioning System (Climate Control) 4-28
Automatic Locking Retractor (ALR) 2-24
Automatic Transaxle Fluid 9-16

B

Basic Operations 4-35
Battery 9-35
Brake Assist System 6-10
Brake Fluid 9-21
Brake Pedal 5-2, 9-22
Brake System Warning Light 4-4
Brakes 9-21
Braking 6-9
Break-In 6-18
Bulb Replacement 9-39

C

Catalytic Converter 6-19
Changing Engine Oil and Filter 9-12
Changing Wheels 9-31
Charging Light 4-6
Child Lock System (rear doors) 2-13
Child Restraint Systems 2-29
Cigarette Lighter and Ashtray 4-16
Clock 4-17
Clutch Pedal 5-2, 9-24
Compact Spare Tire 9-30
Coolant Level Check 9-18
Coolant Replacement 9-18
Corrosion Prevention 11-1
Cruise Control 3-9
Cup Holder and Storage Area 5-11

D

Daily Inspection Checklist 6-1

Downloaded from www.Manualslib.com manuals search engine

INDEX

Daytime Running Light (D.R.L.) Indicator Light 4-10
Daytime Running Light (D.R.L.) System 3-5
Door Locks 2-1
Driver's Seat Belt Reminder Light 4-6
Driving on Hills 7-1
Driving on Slippery Roads 7-2

E

Electric Power Steering Light 4-8
Electronic Stability Program (ESP®) 6-12
Emergency Locking Retractor (ELR) 2-24
Emission Compliance Label (for U.S.A.) 12-2
Engine Block Heater 6-4
Engine Coolant 9-17
Engine Hood 5-10
Engine Oil and Filter 9-11
Engine Serial Number 12-1
Exhaust Gas Warning 6-1
Eyeglasses Holder 5-10

F

Fluid Level Check 9-16
Fog Light Switch 4-16
Folding Rear Seats 5-4
Frame Hooks 5-12
Front Air Bags 2-42
Front Passenger's Seat Belt Reminder Light 4-19
Fuel Consumption and Driving Range 4-17
Fuel Filler Cap 5-3
Fuel Gauge 4-12
Fuel Pump Labeling 1-1
Fuel Recommendation 1-1
Fuses 9-35
FUSES AND PROTECTED CIRCUITS 13-1
Fuses in the Engine Compartment 9-36
Fuses under the Dash Board 9-37

G

Gasoline Containing MTBE 1-1
Gasoline/Ethanol blends 1-1
Gasoline/Methanol blends 1-1
Gear Oil 9-14
Gear Oil Level Check 9-15
Gear Oil Replacement 9-15
Gearshift Lever 5-2
GLOSSARY OF TIRE TERMINOLOGY 9-32
Glove Box 4-20

H

Hazard Warning Switch 4-13
Head Restraints 2-20
Headlight Aiming 9-39
Heated Rear Window and Heated Outside Rearview Mirrors Switch 4-15
Heating and Air Conditioning System 4-21
Heating System 4-22
High Beam Indicator Light 4-9
Highway Driving 7-1
Horn 3-11
How the ABS Works 6-11

I

Identification Numbers 12-1
If the Engine is Flooded 10-5
If the Engine Overheats 10-5
If the Starter Does Not Operate 10-4

Downloaded from www.Manualslib.com manuals search engine

If You Can Not Shift Automatic Transaxle Gearshift Lever Out of "P" (PARK) 10-6
If Your Vehicle Gets Stuck 7-2
Ignition Key Reminder 2-1
Ignition Switch 3-1
Improving Fuel Economy 6-20
Information Display 4-17
Inside Rearview Mirror 2-18
Installation of Child Restraint with Top Strap 2-37
Installation with Lap-Shoulder Seat Belts (child restraint with no top strap) 2-31
Installation with the LATCH System 2-34
Instrument Cluster 4-2
Instrument Light Brightness Control 4-14
Instrument Panel 4-1
intelligent All Wheel Drive (i-AWD) AUTO Indicator Light 4-9
intelligent All Wheel Drive (i-AWD) LOCK Indicator Light 4-9
Interior Light Switch 5-8

J

Jacking Instructions 10-1
Jump Starting Instructions 10-3

K

Keyless Entry System Transmitter 2-10
Keyless Start System Indicator Light 4-8
Keyless Start System Remote Controller 2-3
Keys 2-1

L

Lap-Shoulder Belt 2-24
Lighting Operation 3-5
Lighting/Turn Signal Control Lever 3-5
Lights "On" reminder 3-5
Listening to a CD 4-39
Listening to a CD from an External CD Changer (Option) 4-50
Listening to a XM Satellite Radio (Option) 4-47
Listening to Audio for AUX (Option) 4-49
Listening to the Radio 4-37
Low Fuel Warning Light 4-8
Low Tire Pressure Warning Light 4-3, 6-15
Luggage Compartment Cover 5-14
Luggage Compartment Light 5-15

M

Maintenance Recommended under Severe Driving Conditions 9-7
Maintenance Schedule 9-2
Malfunction Indicator Light 4-7
Manual Heating and Air Conditioning System 4-25
Manual Transaxle 6-6
Mirrors 2-18

O

Odometer 4-11
Oil Level Check 9-11
Oil Pressure Light 4-6
On-Board Vehicle Computers and Event Data Recorders 12-3
Open Door Warning Light 4-8
Outside Rearview Mirrors 2-19

P

Parking Brake Lever 5-1, 9-23
Pedals 5-1

Downloaded from www.Manualslib.com manuals search engine

INDEX

Periodic Maintenance Schedule 9-3
Power Assisted Brakes 6-9
Power Door Locking System 2-2
Power Mirror Control 2-19
Power Steering 9-23
Power Steering Fluid 9-23
Power Window Controls 2-16

R

Radio Antenna 4-38, 5-16
Rear Window Wiper/Washer Switch 3-8
Refill with Oil and Check for Leaks 9-13
Refilling 9-12
Remote Audio Controls 3-11, 4-53
Replace the Oil Filter 9-13
Replacing Tires and/or Wheels 6-18
Reporting Safety Defects 12-4
Roof Rails or Roof Rack Anchors 5-16

S

Safety Certification Label 12-2
Seat Adjustment 2-19
Seat Belt Extender 2-38
Seat Belt Hanger 2-28
Seat Belt Inspection 2-29
Seat Belt Pretensioner System 2-39
Seat Belt Reminder 2-26
Seat Belts and Child Restraint Systems 2-22
Selection of Coolant 9-17
Shoulder Anchor Height Adjuster 2-28
Side Air Bags and Side Curtain Air Bags 2-43
Side Door Locks 2-1
SLIP Indicator Light 4-5, 6-13
Snow Tires 9-31
Spark Plugs 9-20
SPECIFICATIONS 14-1
Specified Fluid 9-16
Specified Gear Oil 9-14
Specified Oil 9-11
Speedometer 4-11
Spot Light 5-9
Stability Control System 6-12
Starting the Engine 6-2
Steering Wheel 9-23
Sun Visor 5-8
Supplemental Restraint System (air bags) 2-40

T

Tachometer 4-12
Tailgate 2-14
Temperature Gauge 4-13
Theft Deterrent Light 4-20
Thermometer 4-17
Tilt Steering Lock Lever 3-8
Tire Chains 7-3
Tire Changing Tool 5-13
Tire Inflation Pressure 9-26
Tire Inspection 9-27
Tire Pressure Monitoring System (TPMS) 6-14
Tire Rotation 9-29
Tire Sidewall Labeling 9-24
Tire Size 9-25
Tires 9-24
Towing a Disabled Vehicle 10-4
Towing Your Vehicle (recreational towing) 8-2

Downloaded from www.Manualslib.com manuals search engine

Traction Control System 6-12
Trailer Towing 8-2
Trip meter 4-11
Troubleshooting 4-57
Trunk Lid 2-15
Trunk Light 5-15
Turn Signal Indicators 4-9
Turn Signal Operation 3-6
U
Uniform Tire Quality Grading 9-28
Using the 2WD/i-AWD (intelligent All Wheel Drive) Switch 6-7
Using the Transaxle 6-5
V
Vehicle Cleaning 11-3
Vehicle Identification Number 12-1
Vehicle Loading 8-1, 9-33
Vehicle With Keyless Start System 3-2, 6-3
W
Warning and Indicator Lights 4-3
Warranties 12-2
Washing 11-4
Waxing 11-5
Windows 2-16
Windshield Washer 3-7
Windshield Washer Fluid 9-19
Windshield Wiper and Washer Lever 3-6
Windshield Wipers 3-6
Wiper Blades 9-44

Downloaded from www.Manualslib.com manuals search engine

MEMO

Downloaded from www.Manualslib.com manuals search engine

Prepared by
SUZUKI MOTOR CORPORATION

June, 2007

Part No. 99011-80J21-03E
Printed in Japan

TP274

Downloaded from www.Manualslib.com manuals search engine

ENGLISH

SERVICE STATION INFORMATION

Fuel recommendation:
See page 1-1

Engine oil recommendation:
Engine oil with “Starburst” symbol

For further details, see “Engine Oil and Filter” in the “INSPECTION AND MAINTENANCE” section.

Brake and clutch fluid:
DOT3

Automatic transaxle fluid:
An equivalent of DEXRON® -III.

Tire cold pressure:
See the “Tire Information Label” located on the driver’s door lock pillar.

Made from 100% recycled paper, except for cover.

99011-80J21-03E

SUZUKI MOTOR CORPORATION

Printed in Japan

Suzuki Red: Magenta 100%, Yellow 100%
Suzuki Blue: Cyan 100%, Magenta 70%

Downloaded from www.Manualslib.com manuals search engine