Alfa Romeo RZ/SZ

table of contents

RZ/SZ 4
BODY 4
LIGHTNING 4
ENGINE 5
FUEL FEED 5
FUEL PUMP 5
ENGINE GASKETS 6
GASKETS ENGINE 6
HEAD SET 7
FULL SET 8
COOLING SYSTEM 9
RADIATOR 9
THERMOSTAT 10
WATERPUMP 11
HOSES 12
ENGINE MOUNT 13
VALVE GEAR 14
CAMSHAFT 14
VALVE MECHANISM 15
TIMINGBELT 16
AIR SYSTEM 17
V-BELTS 18
FILTER 19
FILTER 19
EXHAUST SYSTEM 20
EXHAUST SYSTEM 20
LAMBDA PROBE 21
DRIVETRAIN 22
DIFFERENTIAL 22
GEARBOX MECHANIK 23
DRIVE SHAFT 24
GEAR MOUNT 25
CLUTCH SET 26
CLUTCH ACTUATION 27
BRAKE 28
BRAKE DISKS 28
BRAKE PADS 29
BRAKE CABLE 30
SUSPENSION 31
ATTACHMENT FRONT 31
ATTACHMENT REAR 32
WHEEL BEARING 33
STEERING 34
STEERING PARTS 34
ELECTRIC 35
SWITCHES 35
ENGINE ELECTRIC 36

THROTTLE POSITION SENSOR 36
SENSOR 37
IGNITION SYSTEM 38
AGGREGATS 39
WIPERS 40
WIPERS 40
INTERIOR 41
CAR MAT 41

RZ/SZ > BODY > LIGHTNING

1	BL50892	OE. 60550892 RLASHER RZ/SZ (ES30) FRONT LEFT SIDE	379.00 EUR
2	BL50943	OE. 60550942 FLASHER RZ/SZ (ES30) FRONT RIGHT SIDE	379.00 EUR
3	RL0945	OE. 60550945 REAR LIGHT COVER RZ/SZ LEFT	305.00 EUR
4	RL0944	OE. 60550944 REAR LIGHT COVER RZ/SZ RIGHT	305.00 EUR
5	RL0946	OE. 60550946 REAR LIGHT COVER RZ/SZ CENTR.	305.00 EUR

Kraftstoffpumpe/Fuel Pump RZ/SZ

1. KP 46091

Alfa-Service.com
Piurtienne

1	KP46091	FUEL PUMP 33 (907), 75,90, RZ, SZ SPIDER'90, GTV/6, ALL FUEL INJECTED MODELLS, RUBBER-COATED	146.99 EUR
1	07 039 0 0	RUBBER FOR ELECTRIC FUEL PUMP SPIDER 90, 33ie,75,155,164,RZ/SZ,GT 03-10	4.30 EUR

Dichtungen Motor/Gaskets Engine RZ/SZ

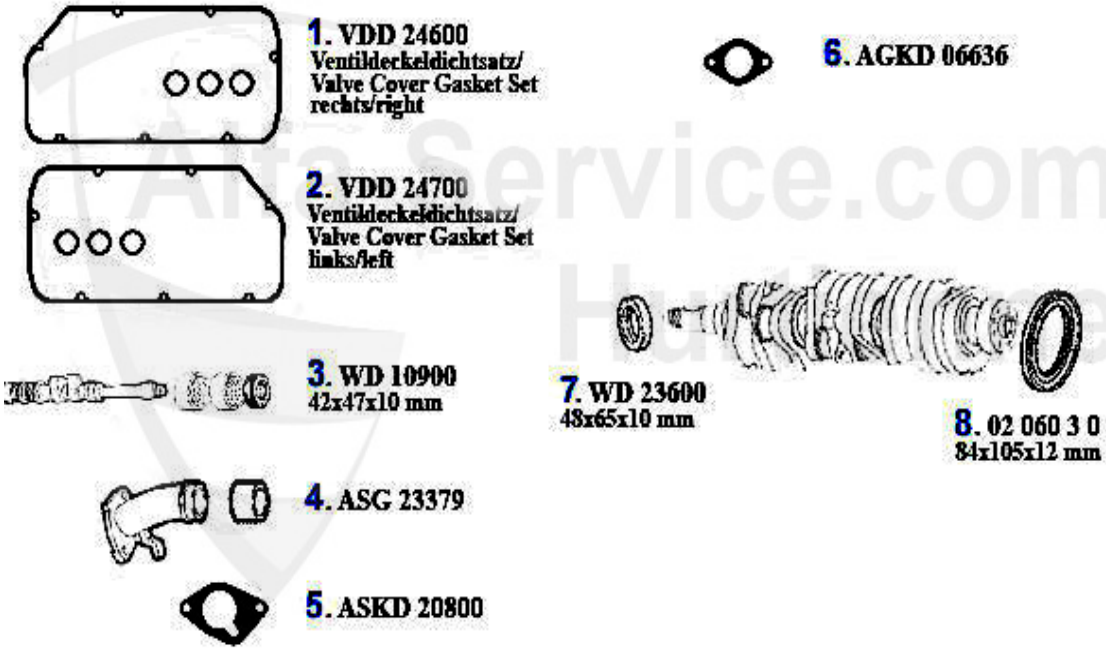

1	VDD24600	CAM COVER GASKET RIGHT 6,75,90	33.34 EUR
2	VDD24700	CAM COVER GASKET LEFT 6,75,90	33.34 EUR
3	WD10900	OIL SEAL 32x47x10 CAMSHAFT GTV 6	16.95 EUR
4	ASG23379	OE. 60523379 RUBBER HOSE f. INTAKE MANIFOLD 116 6-CYLINDER	15.20 EUR
5	ASKD20800	Ansaugkrümmerdichtung 75 V6,RZ/SZ	1.98 EUR
6	AGKD06636	OE. 60506636 GASKET	2.80 EUR
7	WD23600	OE. 60567607 Sealing Gasket	18.85 EUR
8	02 060 3 0	OIL SEAL (84/105/12) CRANKSHAFT REAR Spider 1990-93, 75, 90, 155, 164, GTV 6, 166, 156	24.10 EUR

RZ/SZ > ENGINE > ENGINE GASKETS > HEAD SET

Kopfdichtsatz/Head Gasket Set RZ/SZ

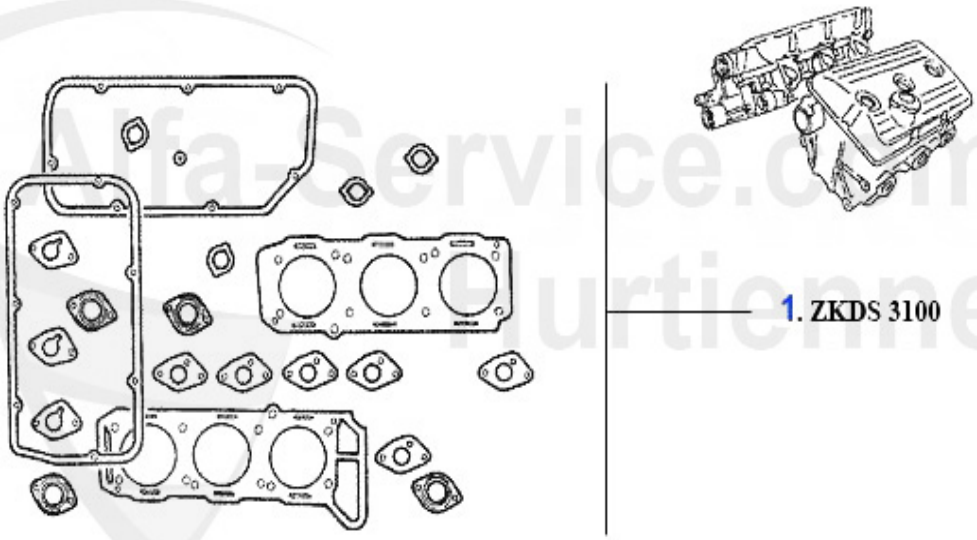

1	ZKDS3100	HEAD GASKET SET 164 3.0 87-89 SPIDER (916) 3.0 95> 75 3.0 87-92 RZ/SZ	282.11 EUR

RZ/SZ > ENGINE > ENGINE GASKETS > FULL SET

Motordichtsatz/Full Set RZ/SZ

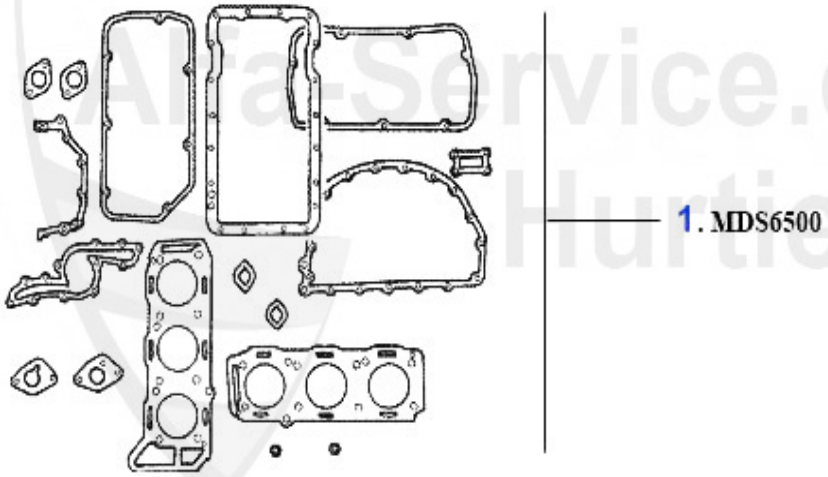

1	MDS6500	ENGINE GASKET SET 75,RZ,SZ 3.0 V6 WITHOUT HEAD GASKETS !	229.00 EUR

RZ/SZ > ENGINE > COOLING SYSTEM > RADIATOR

Kühler/Radiator RZ/SZ

1. MK 22903

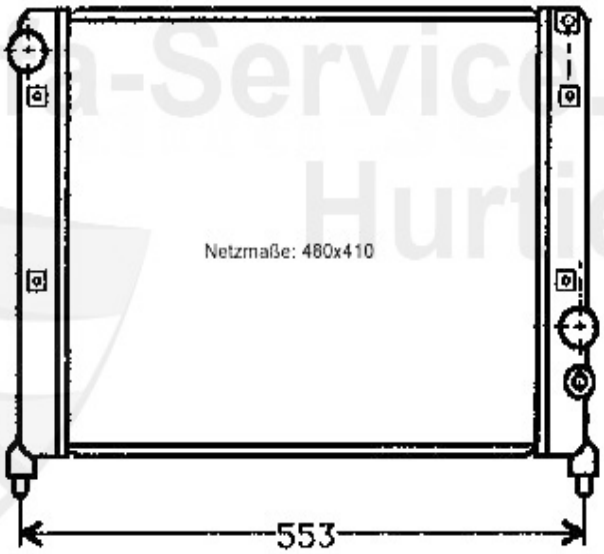

1	MK22903	OE.60534151,RADIATOR 75,SZ,RZ 3.0 V6	***

Thermostat RZ/SZ

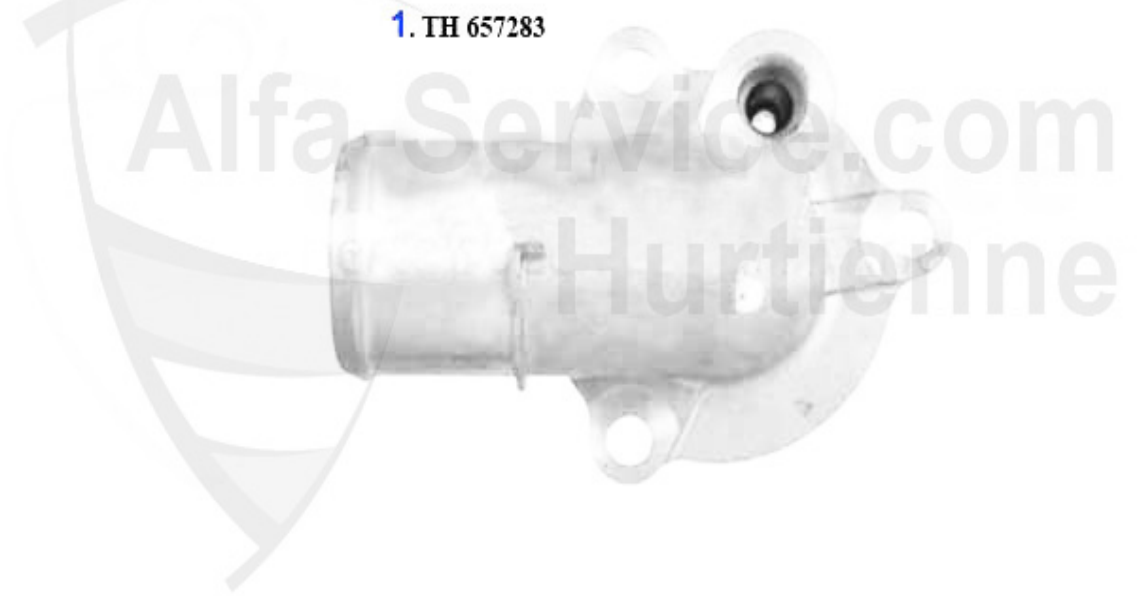

1	TH657283	OE. 60558491 THERMOSTAT 116 6-Cylinder, WITH GASKET	48.50 EUR

Wasserpumpe/Waterpump RZ/SZ

1. WP 53249

Alfa-Service.com
Martienne

1	WP53249	WATER PUMP RZ/SZ 3.0 V6	***

RZ/SZ > ENGINE > COOLING SYSTEM > HOSES

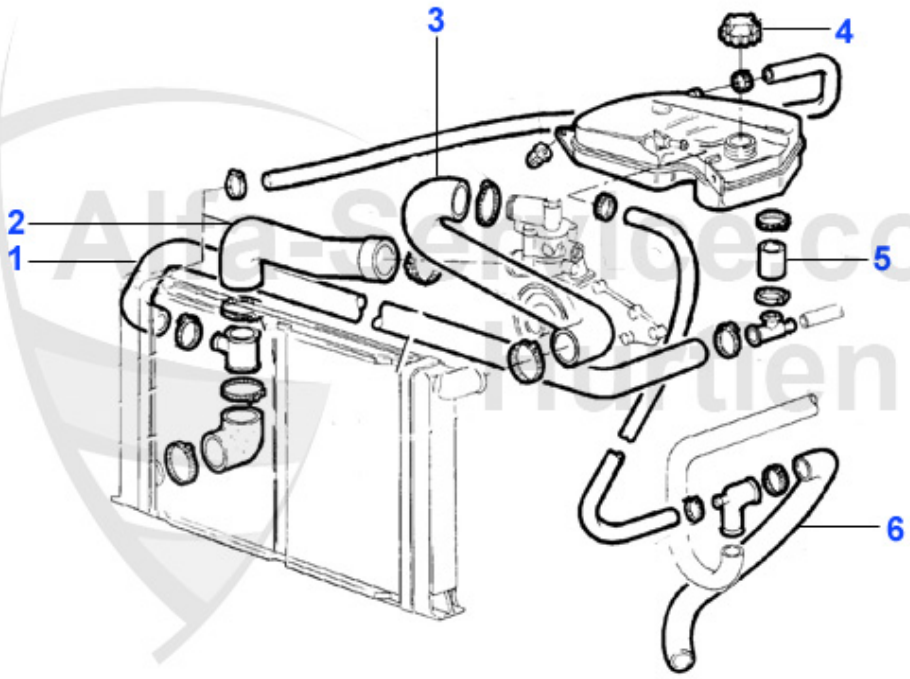

1	KWS33770	OE. 60533770 RADIATOR HOSE "BYPASS" 75 all TYPES	11.50 EUR
2	KWS33864	Kühlwasserschlauch unten 75 6-Zylin der,RZ/SZ	12.30 EUR
3	KWS33866	Kühlwasserschlauch oben 75 6-zylind er,RZ/SZ	21.03 EUR
4	08 037 0 0	CAP for overflow container GTV/6 (116), 33, 145/6, 75, 155, RZ, SZ, SPIDER '90 for 0803600	10.20 EUR
5	03 185 3 0	HOSE valve cover/separator	***
6	KWS28486	REAR WATER HOSE GTV6	17.73 EUR

Motorlager/Enginemount RZ/SZ

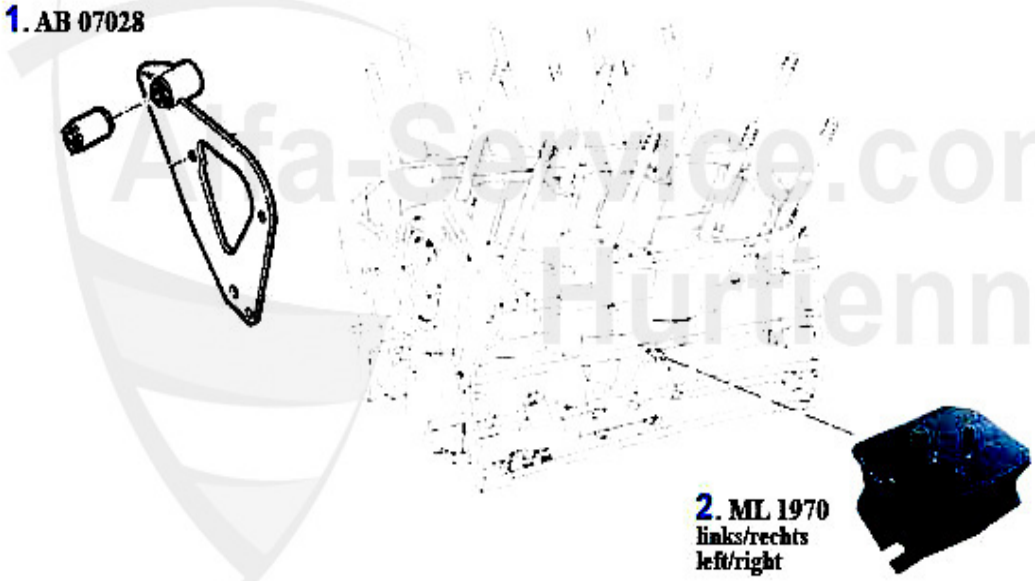

1	AB07028	OE. 60507028 Silent Block	***
2	ML1970	ENGINE MOUNT GTV/6 LEFT/RIGHT 75 V6, RZ/SZ	59.50 EUR

Nockenwelle/Camshaft RZ/SZ

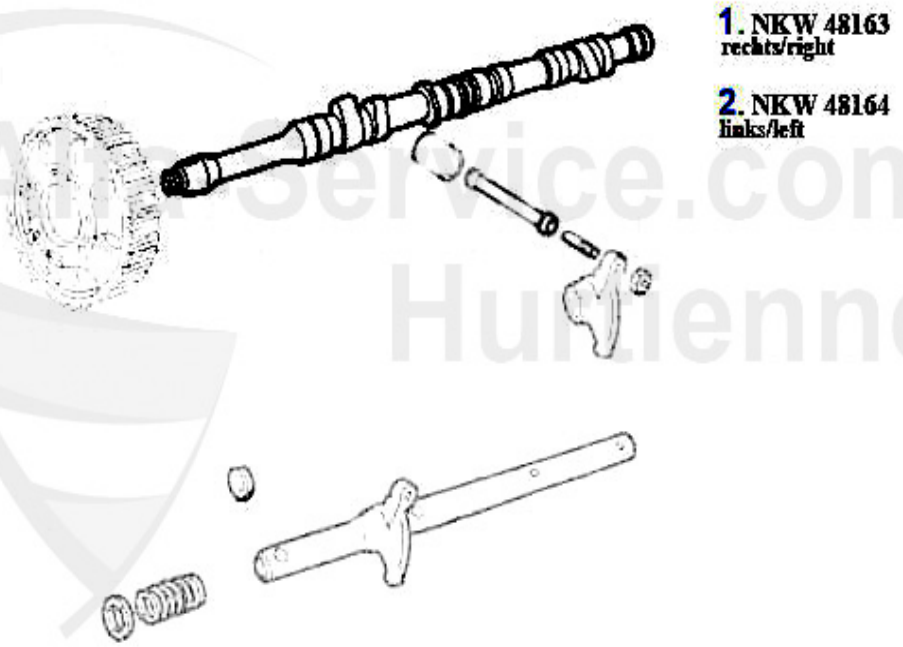

1	NKW48163	CAMSHAFT RIGHT 75 (potenziato),164 QV >1992, RZ, SZ 3.0 V6	579.99 EUR
2	NKW48164	CAMSHAFT LEFT 75 (Potenziato), 164 QV >1992, RZ,SZ 3.0 V6	505.79 EUR

Ventiltrieb/Valve Train RZ/SZ

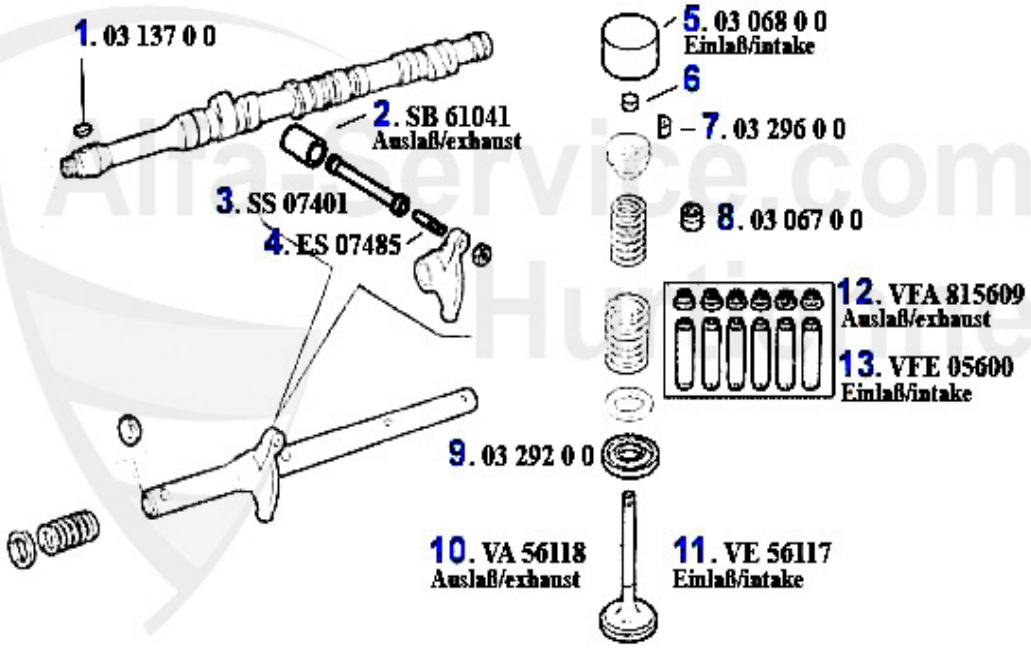

1	03 137 0 0	WEDGE FOR CAMSHAFTS	3.70 EUR
2	SB61041	OE. 60561041 EKHAUST TAPPET 6-CYL.	***
3	SS07401	Stösselstange (Auslasseite) 75,155 164,166,RZ,SZ,gtv/spider (916),GTV/ 6	50.86 EUR
4	ES07485	Einstellschraube f. Kipphebelwelle 75,155,164,166,RZ,SZ,gtv/spider (916),GTV/6	3.45 EUR
5	03 068 0 0	CAM FOLLOWER OE60612178	23.50 EUR
6	03 043 0 0	VALVE ADJUSTING SHIMS	5.40 EUR
6	03 084 0 0	VALVE ADJUSTING SHIMS 205 pcs per box 1.500 - 2.500 mm	279.00 EUR
6	03 114 0 0	VALVE ADJUSTING SHIMS 200 pcs per box 2.525 - 3.500 mm	315.00 EUR
7	03 296 0 0	VALVE COTTERS 9mm	1.20 EUR
8	03 255 0 0	VALVE SEAL WITH SPRING INTAKE AND EXHAUST SIDE (GREEN)	4.86 EUR
9	03 292 0 0	CUP FOR VALVE WASHER	***
10	VA56118	Ventil-Auslaß 75,164/Super,RZ,SZ,gt v/spider (916) 3.0 V6 (nicht 24V)	***
11	VE56117	Ventil-Einlaß 75,164/Super,RZ,SZ,gt v/spider (916) 3.0 V6 (nicht 24V)	***
12	VFA815609	OE. 60605721 Valve Guide-Exhaust 6-Cylinder 116	9.75 EUR
13	VFE05600	OE. 60605725 Valve Giude	13.23 EUR

RZ/SZ > ENGINE > VALVE GEAR > TIMINGBELT

Zahnriemen/Timing Belt RZ/SZ

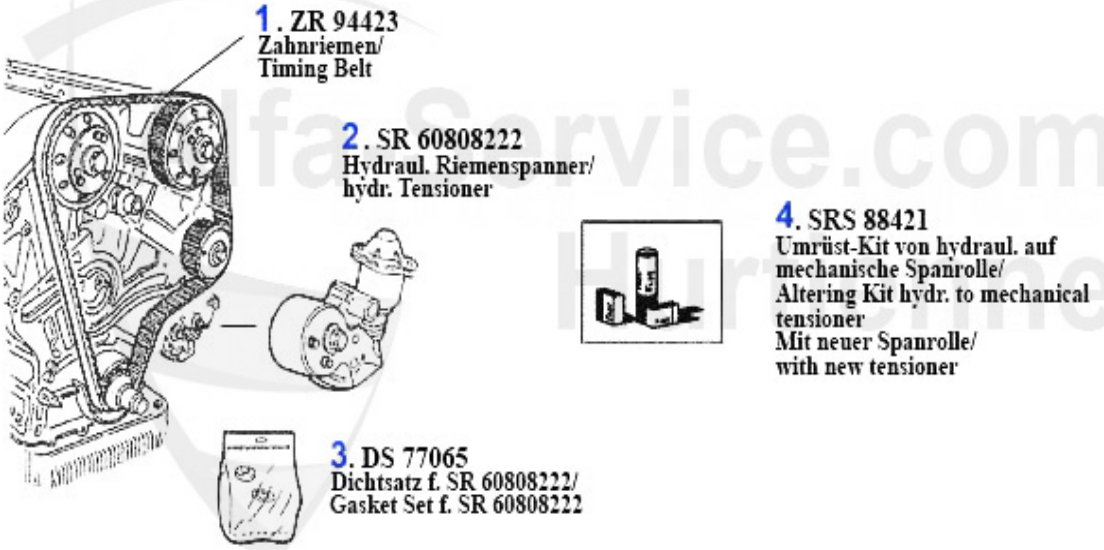

1	ZR94423	OE. 60562106 TIMING BELT	38.57 EUR
2	SR60808222	BELTTENSIONER HYDRAULIC 75,155,RZ,SZ,164	***
3	DS77065	OE. 60777065 GASKET-SET F. BELTSTRETCHER	39.90 EUR
4	SRS88421	ALTERING KIT TIMING BELT TENSIONER HYDRAULIC TO MECHANIC V6	175.00 EUR

Einspritzanlage/Injection System RZ/SZ

1. LMS 34953 2. LMM 23386 3. LV 23388

1	LMS34953	OE. 60534953 RIGID SLEEVE 116 6-CYL.	98.00 EUR
2	LMM23386	OE. 60534959 AIR FLOW METER 2.5 V6 75, 90, 6, GTV/6	***

Keilriemen/V-Belt RZ/SZ

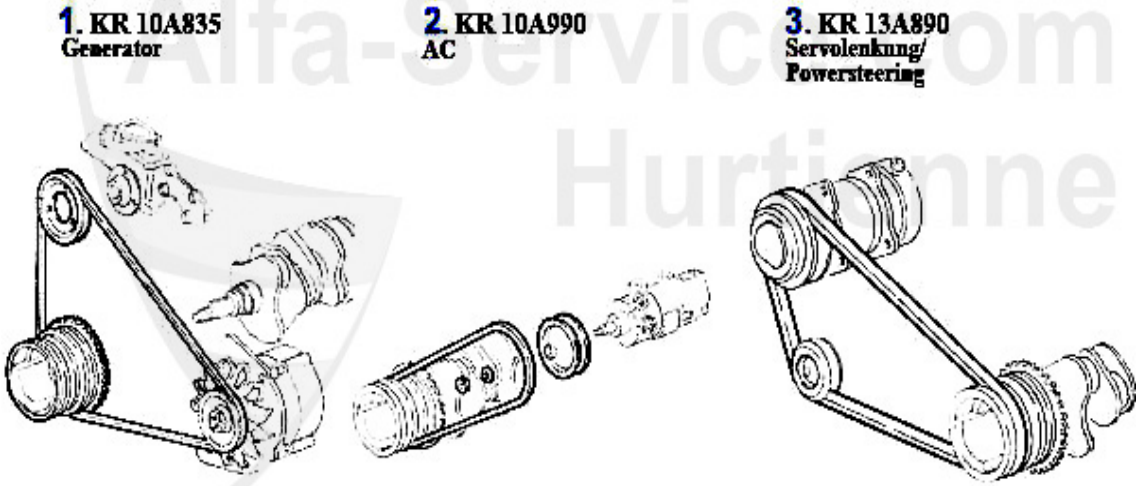

Alfa-Service Hurtienne

2	KR10A990	OE. 60534343 V-BELT 10x990	11.23 EUR
3	KR13A890	OE. 60534863 V-BELT 13x888/890 AC	20.35 EUR

RZ/SZ > FILTER > FILTER

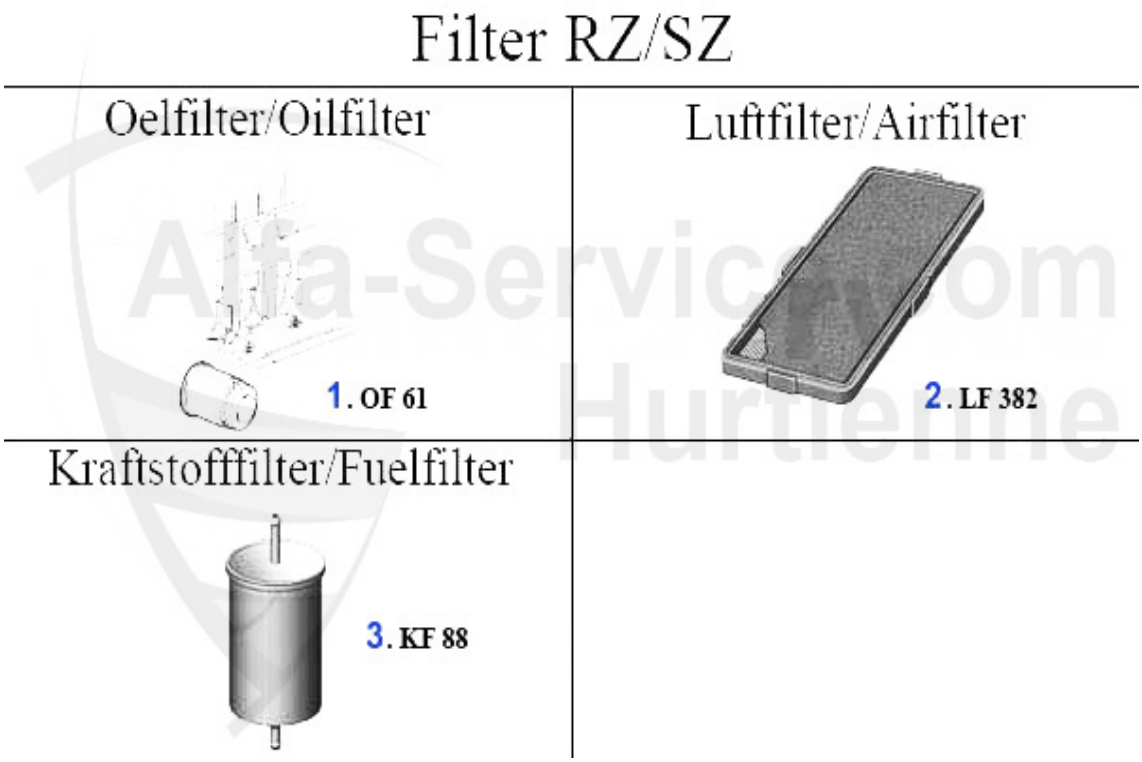

1	OF61	Ölfilter Sud/Sprint 1.2/1.3/ti,RZ/ SZ 3.0 V6 Anschraubfilter	6.66 EUR
2	LF382	AIR FILTER 75/90 GTV/6(116),RZ,SZ 6-CYL. SQUARE	28.99 EUR
3	KF88	FUEL FILTER 75, 90, 164, ALFETTA GIULIETTA, SPIDER (115), GTV (116), RZ, SZ, in-line filter	20.52 EUR

RZ/SZ > EXHAUST SYSTEM > EXHAUST SYSTEM

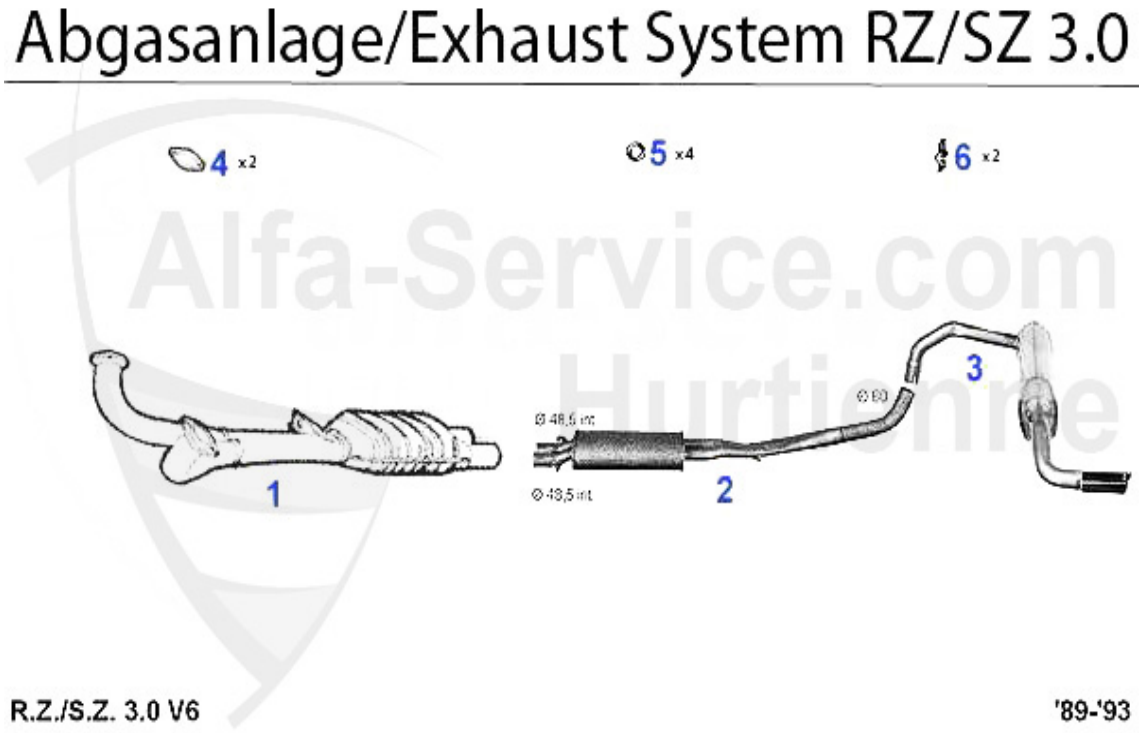

1	KAT55005 OE. 60555005 KATALYSATOR RZ/SZ 3.0 V6	***
2	MSD322468 CENTER MUFFLER RZ/SZ	214.20 EUR
3	ESD555177 OE.60555177 REAR MUFFLER RZ/SZ	359.00 EUR
4	SAT094414 Dichtung VSD 164/Super,RZ,SZ,gtv/sp ider (916) 3.0 V6	4.94 EUR
5	SAT091011 OE 60521386, RUBBER RING EXHAUST MOUNTING DIVERSE TYPES	1.23 EUR

Lambda-Sonde/Lambda Probe RZ/SZ

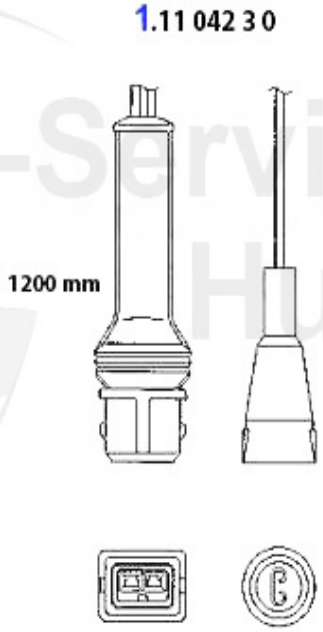

Alfa-Service.com Hurtienne

1	11 042 3 0	OE. 7654221 LAMBDA-PROBE	77.99 EUR

RZ/SZ > DRIVETRAIN > DIFFERENTIAL

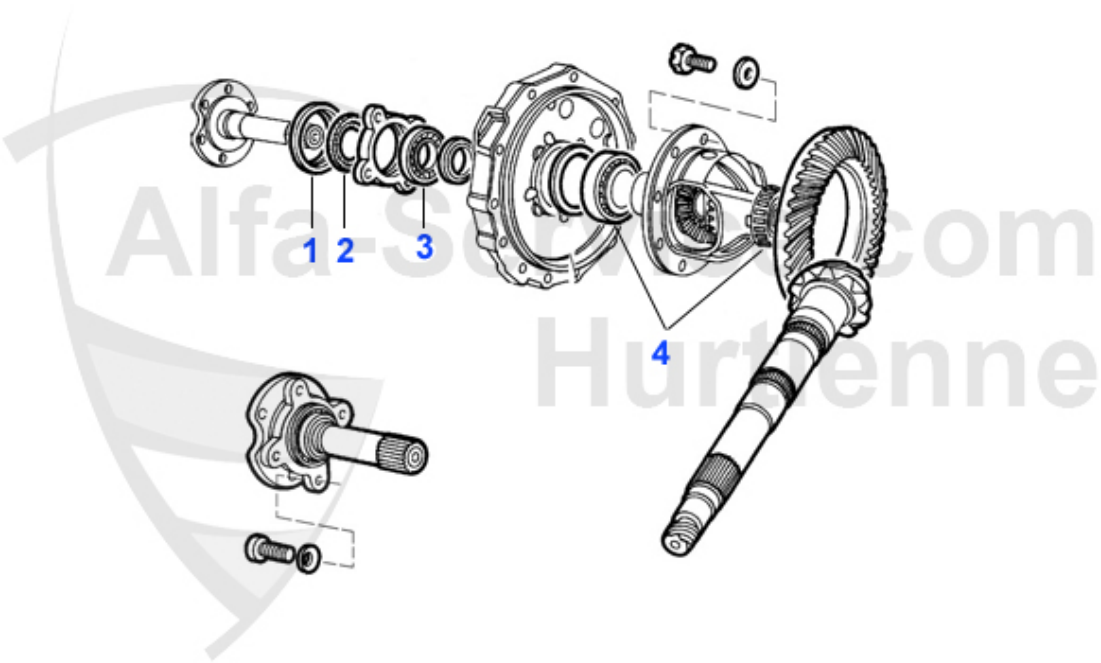

1	WD21228	JOINT RING REAR DIFF. 116,AR 75 4 AND 6 CYL.,RZ/SZ	4.90 EUR
2	WD21231	JOINT RING REAR DIFFENRENTIAL 116,AR 75 4 AND 6 CYLINDER,RZ/SZ	29.00 EUR
3	GL8685	SHOULDER BEARING DIFF. AR75 + GTV6 OE 71728685	23.80 EUR
4	GL8680	Schulterlager Diff.AR116	43.99 EUR

RZ/SZ > DRIVETRAIN > GEARBOX MECHANIK

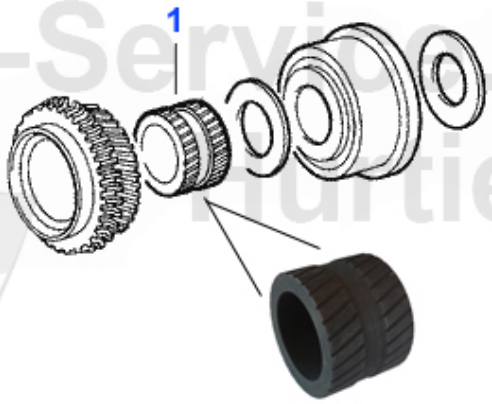

0	GL23042	OE. 60523042 BUSHING	58.99 EUR

RZ/SZ > DRIVETRAIN > DRIVE SHAFT

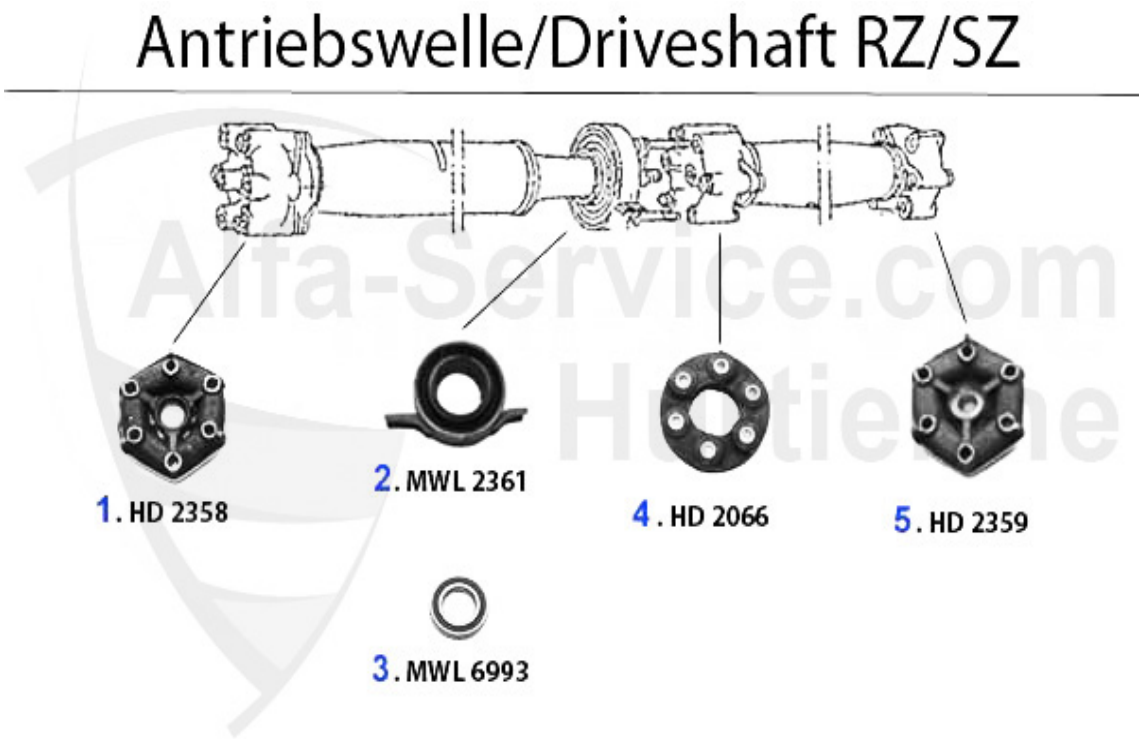

1	HD2358	FRONT FLEX DISC GTV6, 75, 90 2500-3000 OE. 60518193	95.00 EUR
2	MWL2361	OE. 60522599 DRIVE SHAFT SUPPORT 116 6-Cyl.	67.83 EUR
3	MWL6993	OE.71728684, BEARING DRIVE SHAFT SUPPORT 6 CYL.	23.80 EUR
4	HD2066	GTV 6 / 75 3,0 CENTER FLEX DISC	105.01 EUR
5	HD2359	REAR FLEX DISC GTV6, 75, 90 2500-3000 OE. 60522592	119.00 EUR

Getriebeaufhängung/Gear Mount RZ/SZ

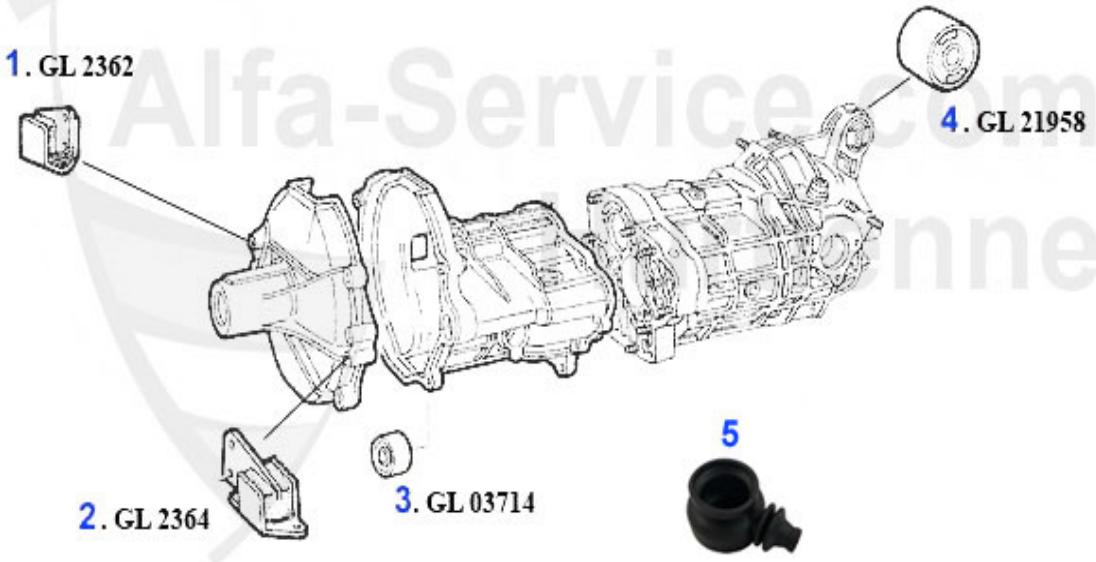

1	GL2362	GEARBOX MOUNT R 6-CYL. 116	38.00 EUR
2	GL2364	GEARBOX MOUNT L 116 6-CYL.	38.00 EUR
3	GL03714	OE.60703714 GEARBOX MOUNT 75,90 RZ,SZ	***
4	GL21958	OE. 60521958 GEAR MOUNT REAR 75,90, RZ/SZ,ALFETTA,GIULIETTA,GT/V(116)	22.05 EUR
5	SMS3119	OE. 60523119 GEAR LEVER COVER 75,90, RZ/SZ	12.50 EUR

RZ/SZ > DRIVETRAIN > CLUTCH SET

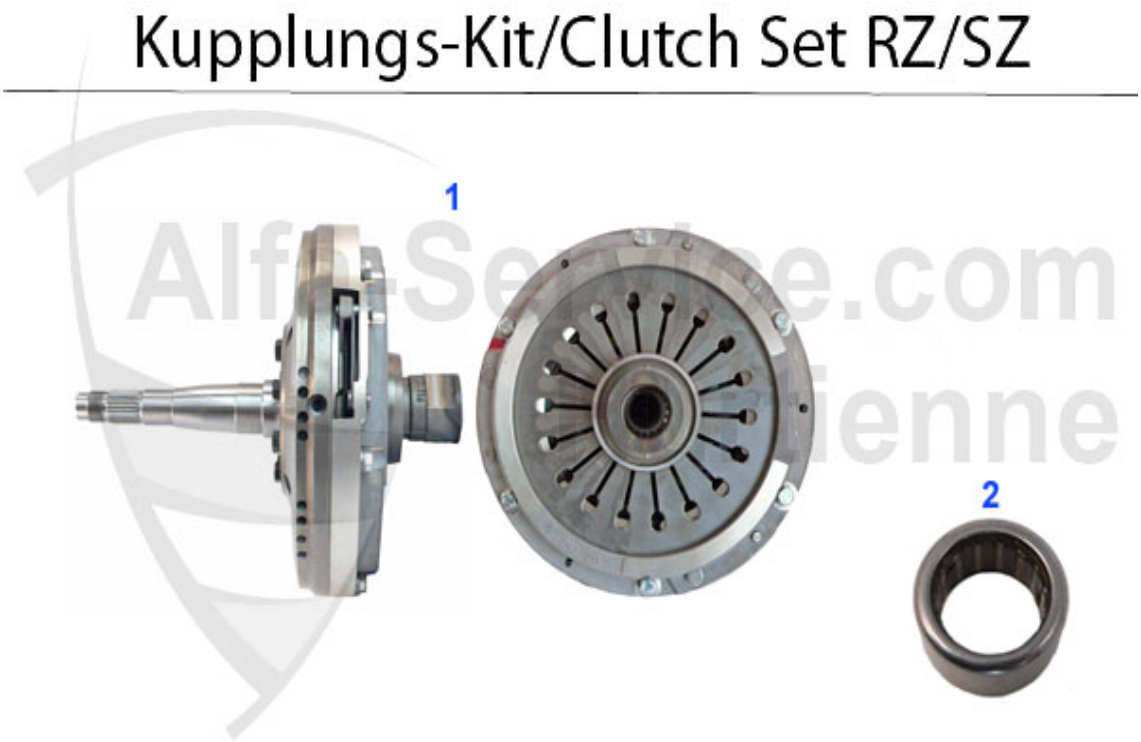

1	KK101301	CLUTCH SYSTEM WITH STRONGER FACING RZ/SZ, 1.8 Turbo	1011.92 EUR
2	KKNL024	NEEDLE BEARING 75,RZ/SZ,ALFETTA, GIULIETTA,GTV (116)	***

RZ/SZ > DRIVETRAIN > CLUTCH ACTUATION

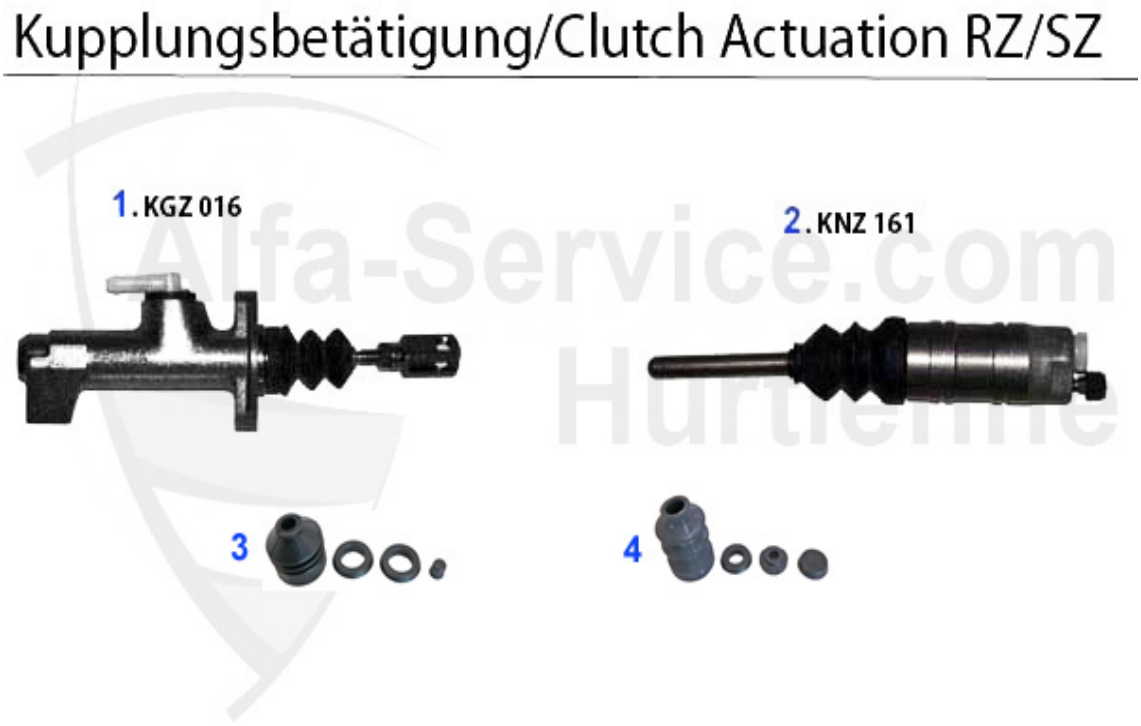

1	KGZ016	OE. 60518194 CLUTCH MASTER CYLINDER 116 1983>	81.04 EUR
2	KNZ161	CLUTCH SLAVE CYLINDER, WITHOUT VALVE PUSH ROD	95.20 EUR
3	RKN3156	REPAIR KIT SLAVE CYLINDER 116 RZ/SZ	26.18 EUR
4	RKG1134	REPAIR KIT MASTER CYLINDER 116 RZ/SZ	26.18 EUR

Bremsscheiben/Brakedisks RZ/SZ

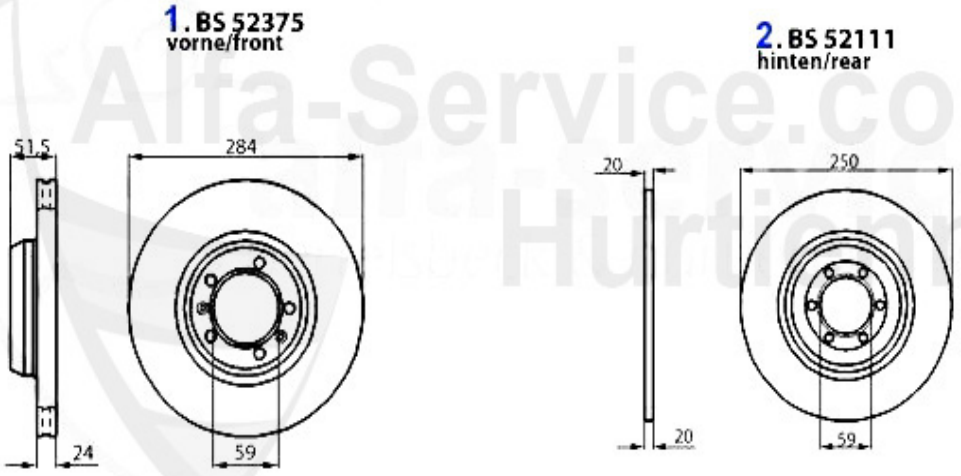

1	BS52375	OE. 60552375 BRAKEDISK FRONT RZ/SZ	***
2	BS52111	OE. 60552111 BRAKE DISC REAR RZ/SZ	***

Bremsbeläge/Brakepads RZ/SZ

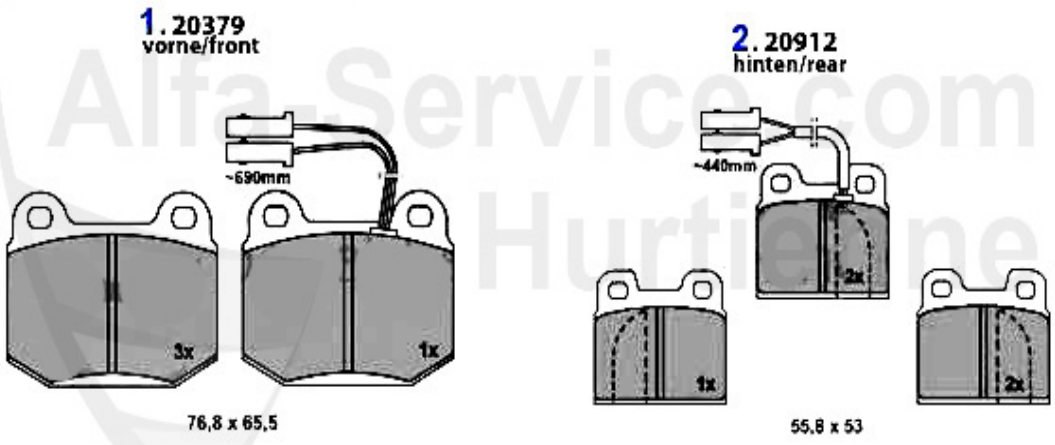

1	20379 165 05	SBB VA mit WE 116 6-Zyl. 75 Turbou/TS/V6/TD Bj. >10.89 Bremssystem : Ate	91.30 EUR
2	20912 150 05	REAR BRAKE PADS WITH WARNING UNIT 1.6/ 1.8/TURBO/2.0 BRAKE SYSTEM:ATE	70.21 EUR

Handbremsseil/Brake Cable RZ/SZ

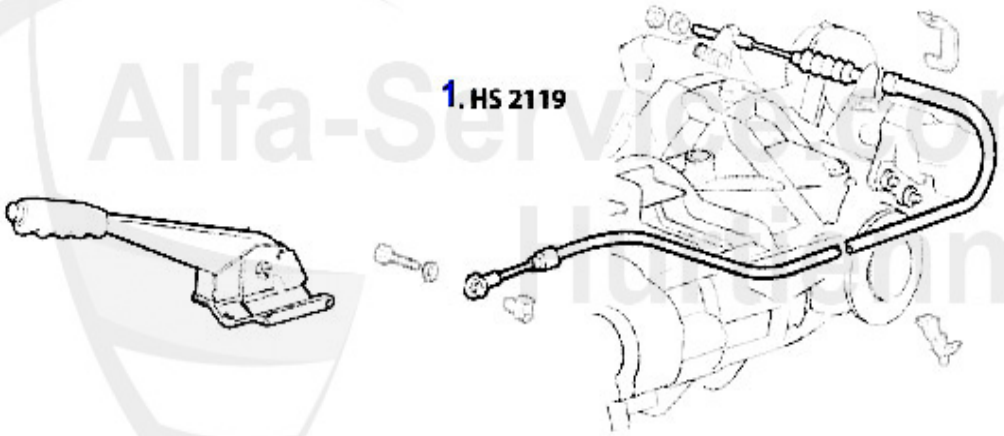

1	HS2119	WIRE	***

RZ/SZ > SUSPENSION > ATTACHMENT FRONT

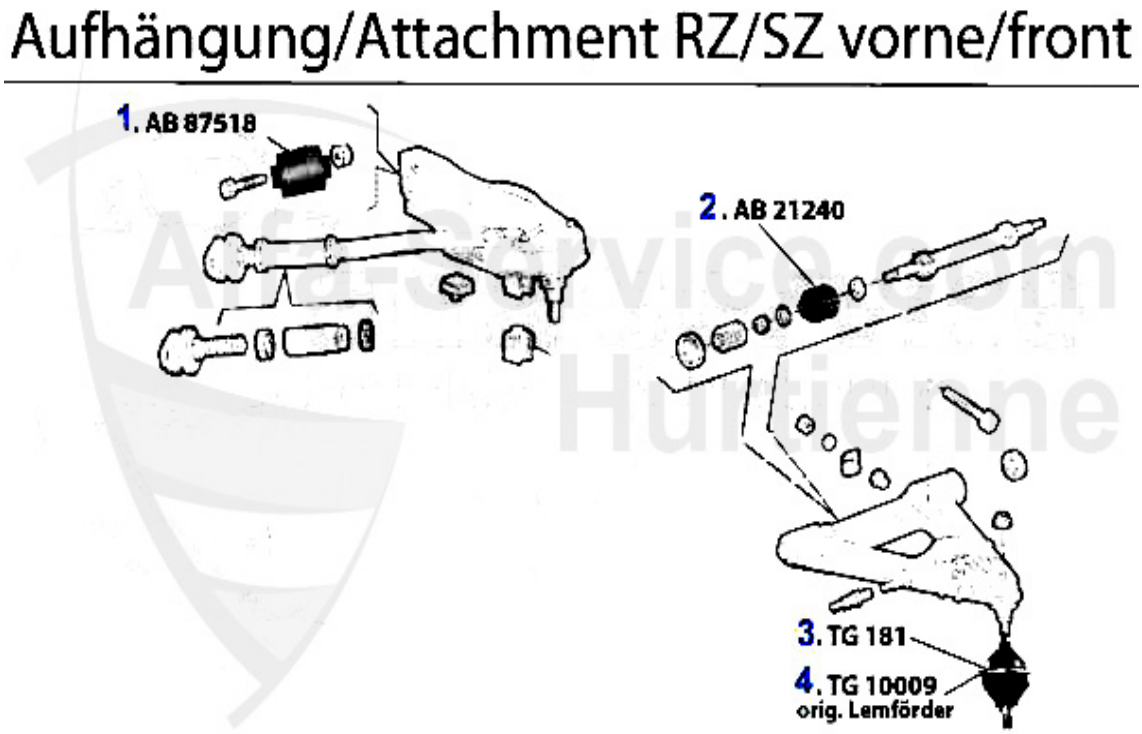

1	AB87518	OE.60521269 SUSPENSION ARM BUSH FRONT, 75,GT/V/6 (116), RZ/SZ	8.21 EUR
2	AB21240	OE. 60521240 LOWER ARM BUSH 116 FA 2 PIECES EACH SIDE NEEDED	40.01 EUR
3	TG181	LOWER BALL JOINT F. 116	40.01 EUR
4	TG10009	OE. 60521236/7 LOWER BALL JOINT LEMFÖRDER	45.65 EUR

RZ/SZ > SUSPENSION > ATTACHMENT REAR

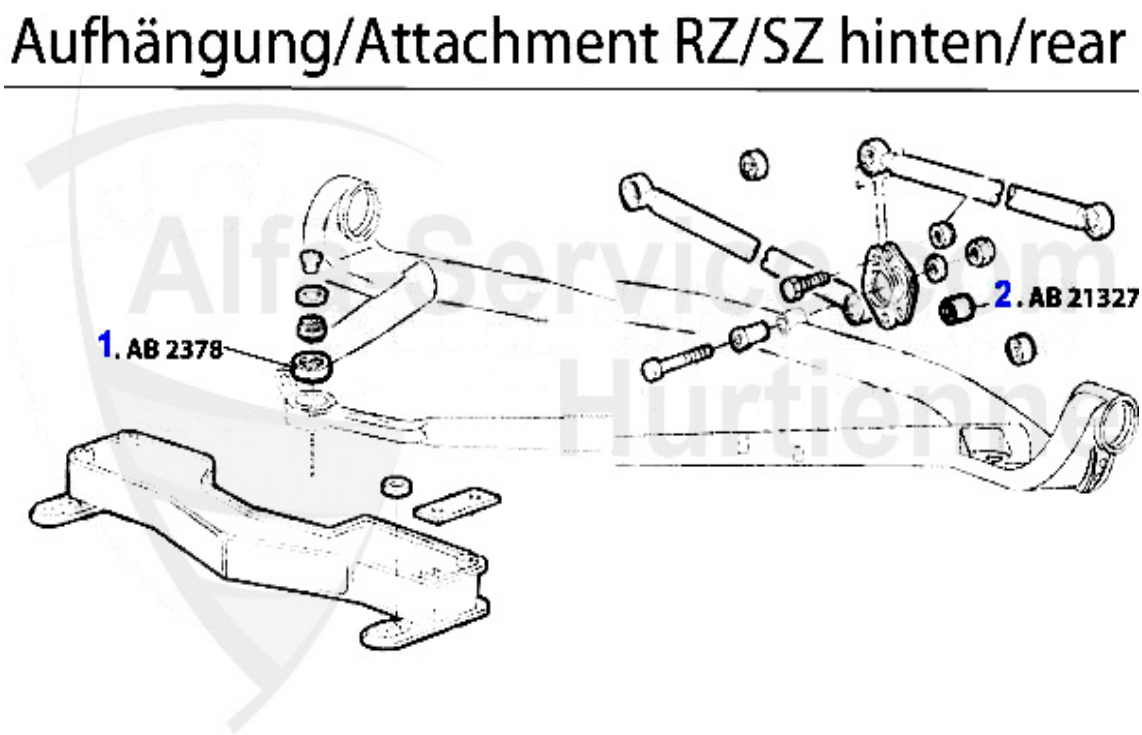

1	AB2378	DEDION BEARING BUSH RZ/SZ OE 60552378	59.39 EUR
2	AB21327	REAR AXLE BUSH MIDDLE 116	17.90 EUR
3	RL23539	REAR WHEEL BEARING RZ/SZ	***

Radlager/Wheel Bearing RZ/SZ

vorne/front:

hinten/rear:

Alfa-Service.com
Hurtienne

1	RL0617	Radlagersatz Alfa 6/75 1,8 Turbo/2,0TS/2,5 V6/3,0 V6 RZ+SZ ab 01/1990	46.16 EUR

RZ/SZ > STEERING > STEERING PARTS

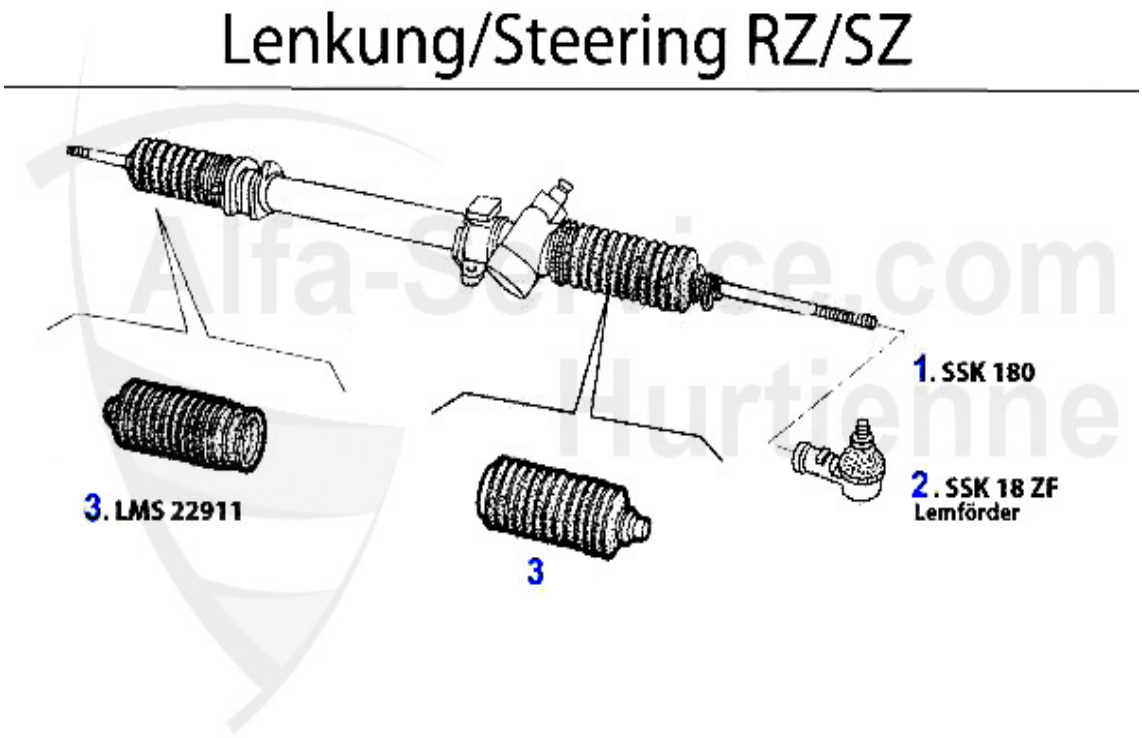

1	SSK180	TIE ROD END ALFETTA,GIULIETTA,GTV/6 (116)75,90,RZ/SZ	32.83 EUR
2	SSK18ZF	OE: 60521320 TIE ROD END 116 Lemförder	***

RZ/SZ > ELECTRIC > SWITCHES

1	SCH50921	OE. 60550921 HAZARD SWITCH ES 30	29.90 EUR
2	SCH2026	SWITCH BOOT LID OPENER	29.96 EUR
3	SCH08234	OE. 60508234 SWITCH	***

RZ/SZ > ELECTRIC > ENGINE ELECTRIC > THROTTLE POSITION SENSOR

0	DKS83003	THROTTLE SWITCH	83.30 EUR

RZ/SZ > ELECTRIC > ENGINE ELECTRIC > SENSOR

1	WTG60145	TEMPERATUR SENSOR 33(905/7),75,155,164 164 /Super,Spider 115,RZ/SZ, Spider/GTV (916)	13.99 EUR

RZ/SZ > ELECTRIC > ENGINE ELECTRIC > IGNITION SYSTEM

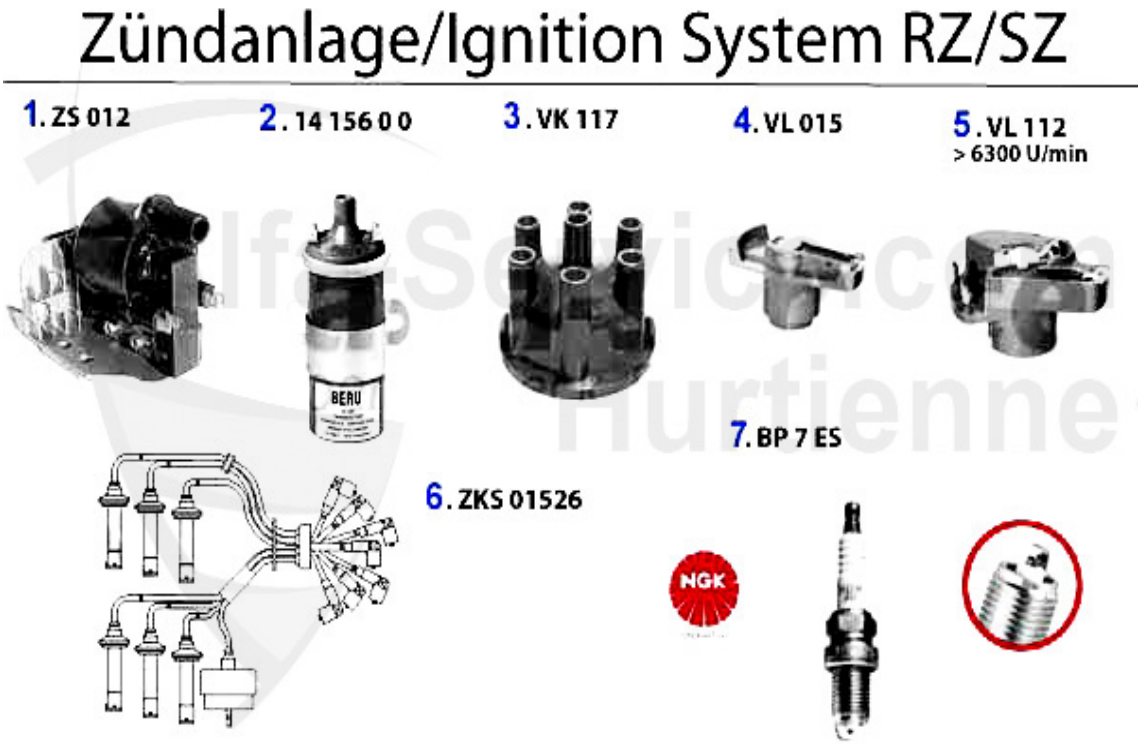

1	ZS012	IGNITION COIL ELECTRONICAL VERSION, 33,75,90,ARNA,SUD/SPRINT,ALFETTA, GIULIETTA YEAR 86 > SYSTEM: BOSCH	***
2	14 156 0 0	IGNITION COIL SPIDER(115),6,33,75,90,164 div. 1986-94	74.49 EUR
3	VK117	OE. 60735405 DISTRIBUTOR CAP 116 6-CYL.	17.40 EUR
4	VL015	OE.60735860 ROTOR BOSCH SYSTEM, 6,GTV6,75,2.5 V6	8.10 EUR
5	VL112	OE. 60735406 ROTOR BOSCH SYSTEM OVERSPEED TRIP UNIT 6300 U/min 116 6-CYL	33.00 EUR
6	ZKS01526	CABLES 75 V6,GTV/6 (116)	173.37 EUR
7	BP 7 ES	Zündkerze NGK 6 2.0/2.5 ie,75 2.5 V 6,90 2.5 V6,164 Super 2.0 TS/V6 Tur bo,GTV/6 (116),gtv/spider (916) 2.0 V6 Turbo	3.39 EUR

RZ/SZ > ELECTRIC > ENGINE ELECTRIC > AGGREGATS

1	AN10790	STARTER 75,90,GTV (116),RZ/SZ 6 CIL. & TURBO	204.14 EUR

RZ/SZ > WIPERS > WIPERS

1	WR57104	Wischer-Relais 75,RZ,SZ,GTV/6	26.57 EUR

RZ/SZ > INTERIOR > CAR MAT

1	FMS RZ SZ FOOT MATS RZ/SZ BLACK VELOUR WITH RED ALFA LOGO	59.90 EUR