STEERING SYSTEM

PRECAUTION

1. HANDLING PRECAUTIONS FOR SRS AIRBAG SYSTEM
(See page RS-1)

2. HANDLING PRECAUTIONS FOR STEERING COLUMN

(a) When handling the steering column assembly.

(1) Avoid any impact to the steering column assembly, especially to the motor or the torque sensor. Replace with a new one if dropped or subjected to any severe impacts.

(2) Do not pull the wire harness when moving the steering column assembly.

(3) When the steering column assembly or other steering-related parts have been removed and either reinstalled or replaced, perform steering center point adjustment (zero point calibration).

(b) When disconnecting or reconnecting the connectors.

(1) When disconnecting connectors related to the electronic motor power steering system, turn the ignition switch to ON (the engine is stopped), center the steering wheel, turn the ignition switch to OFF, and then disconnect the connectors.

(2) When reconnecting connectors related to the electronic motor power steering system, make sure that the ignition switch is turned to OFF. Center the steering wheel and then turn the ignition switch to ON (the engine is stopped).
NOTICE:
Do not turn the ignition switch to ON when the steering wheel is not centered

(3) If the above operations are not carried out correctly, the steering center point (zero point) will deviate, causing a difference in steering effort between right and left turns. If there is a difference in the steering effort between right and left turns, perform the steering center point adjustment (zero point calibration).

PROBLEM SYMPTOMS TABLE

STEERING

Symptom	Suspected area	See page
Hard steering	Front tires (Improperly inflated or unevenly worn)	TW-1
	Front wheel alignment (Incorrect)	SP-2
	Front suspension (lower ball joint)	SP-23
	Steering intermediate shaft (for Sedan)	SR-12
	Steering intermediate shaft (for Hatchback)	SR-30
	Steering column assembly (for Sedan)	SR-12
	Steering column assembly (for Hatchback)	SR-30
	Steering gear assembly (for Sedan)	PS-63
	Steering gear assembly (for Hatchback)	PS-73
	Power steering ECU (for Sedan)	PS-83
	Power steering ECU (for Hatchback)	PS-89
Poor return	Front tires (Improperly inflated or unevenly worn)	TW-1
	Front wheel alignment (Incorrect)	SP-2
	Steering column assembly (for Sedan)	SR-12
	Steering column assembly (for Hatchback)	SR-30
	Steering gear assembly (for Sedan)	PS-63
	Steering gear assembly (for Hatchback)	PS-73
	Power steering ECU (for Sedan)	PS-83
	Power steering ECU (for Hatchback)	PS-89
No free play or excessive play	Steering intermediate shaft (for Sedan)	SR-12
	Steering intermediate shaft (for Hatchback)	SR-30
	Steering gear assembly (for Sedan)	PS-63
	Steering gear assembly (for Hatchback)	PS-73
Knocking (or clunking) sound occurs when steering wheel turned while power steering in operation	Steering intermediate shaft (for Sedan)	SR-12
	Steering intermediate shaft (for Hatchback)	SR-30
	Front suspension (lower ball joint)	SP-23
	Front axle hub (Hub bearing)	AH-6
	Steering gear assembly (for Sedan)	PS-63
	Steering gear assembly (for Hatchback)	PS-73
Friction sound occurs when steering wheel turned during low speed driving	Power steering motor (for Sedan)	SR-12
	Power steering motor (for Hatchback)	SR-30
	Steering column assembly (for Sedan)	SR-12
	Steering column assembly (for Hatchback)	SR-30
High-pitched sound (squealing sound) occurs when steering wheel turned slowly with vehicle stopped	Power steering motor (for Sedan)	SR-12
	Power steering motor (for Hatchback)	SR-30
Steering wheel vibrates and noise occurs when steering wheel turned while vehicle stopped	Power steering motor (for Sedan)	SR-12
	Power steering motor (for Hatchback)	SR-30
	Steering column assembly (for Sedan)	SR-12
	Steering column assembly (for Hatchback)	SR-30

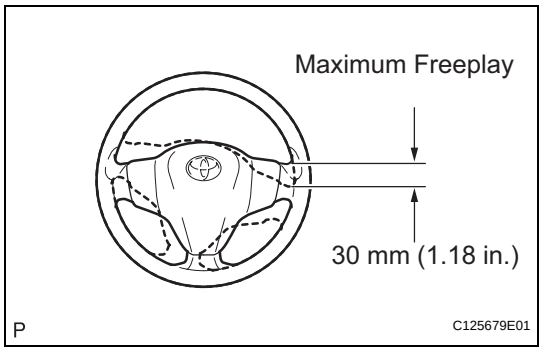

ON-VEHICLE INSPECTION

1. CHECK STEERING WHEEL FREE PLAY

(a) Stop the vehicle and align the tires facing straight ahead.

(b) Turn the steering wheel gently right and left, and check the steering wheel free play.
Maximum Free Play:
30 mm (1.18 in.)

(c) If the freeplay exceeds the maximum, replace the steering intermediate shaft sub-assembly or steering gear.

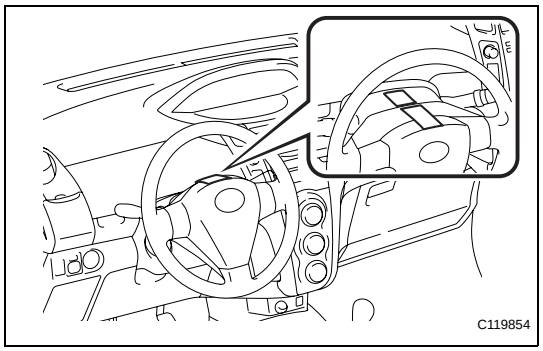

REPAIR

1. CORRECT STEERING OFF CENTER

(a) Check whether the steering wheel is off-center.

(1) Apply masking tape to the top center of the steering wheel and the steering column upper cover.

(2) Drive the vehicle in a straight line for 100 meters at a constant speed of 35 mph (56 km/h), holding the steering wheel to maintain the course.

(3) Draw a line on the masking tape, as shown in the illustration.

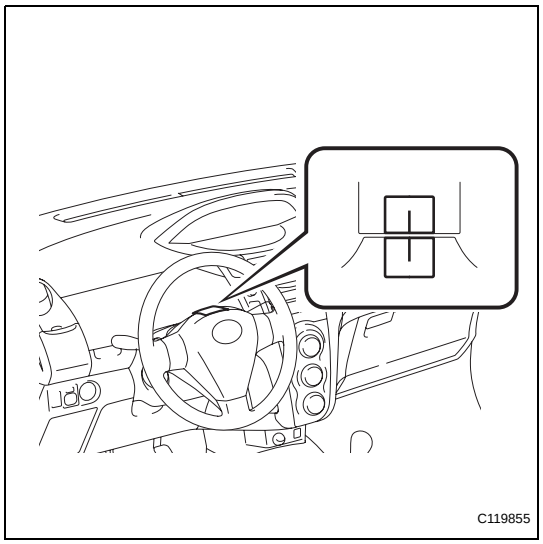

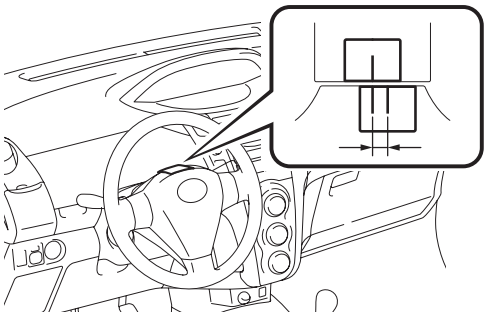

(4) Turn the steering wheel to the straight position.
HINT:
Look at the upper surface of the steering wheel, the steering spokes and the SRS airbag line to determine the straight position.

(5) Draw another line on the masking tape on the steering wheel, as shown in the illustration.

(6) Measure the distance between the 2 lines on the masking tape on the steering wheel.

(7) Convert the measured distance to the steering angle.
HINT:
- Measured distance of 1 mm (0.04 in.) = Approximately 1 degree steering angle.
- Make a note of the steering angle.

(b) Adjust the steering angle

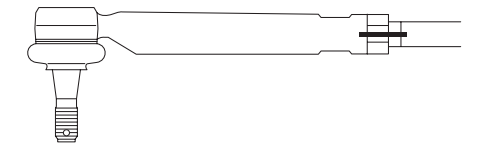

(c) For steps (1) and (2) below, carry out RH and LH procedures separately.

(1) Draw a line on the tie rod and rack end where it can easily be seen.

(2) Using a paper gauge, measure the distance between the tie rod end and the rack end screw.

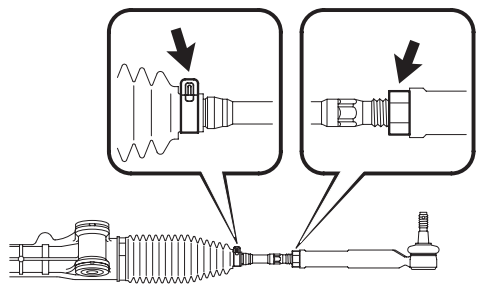

(3) Remove the RH and LH boot clips from the rack boots.

(4) Loosen the RH and LH lock nuts.

(5) Turn the RH and LH rack ends by the same amount (but in opposite directions) in accordance with the steering angle.
HINT:
- Electronic Power Steering:
  1 turn (360°) of rack end (1.25 mm (0.049 in.) horizontal movement) - 10.5° of steering angle.

(6) Tighten the RH and LH lock nuts.
Torque: 74 N*m (755 kgf*cm, 55 ft.*lbf)
NOTICE:
Make sure that the difference in length between the RH and LH tie rod ends and rack end screws is less than 1.5 mm (0.059 in.).

(7) Install the RH and LH boot clips.

STEERING COLUMN ASSEMBLY (for Sedan)

COMPONENTS

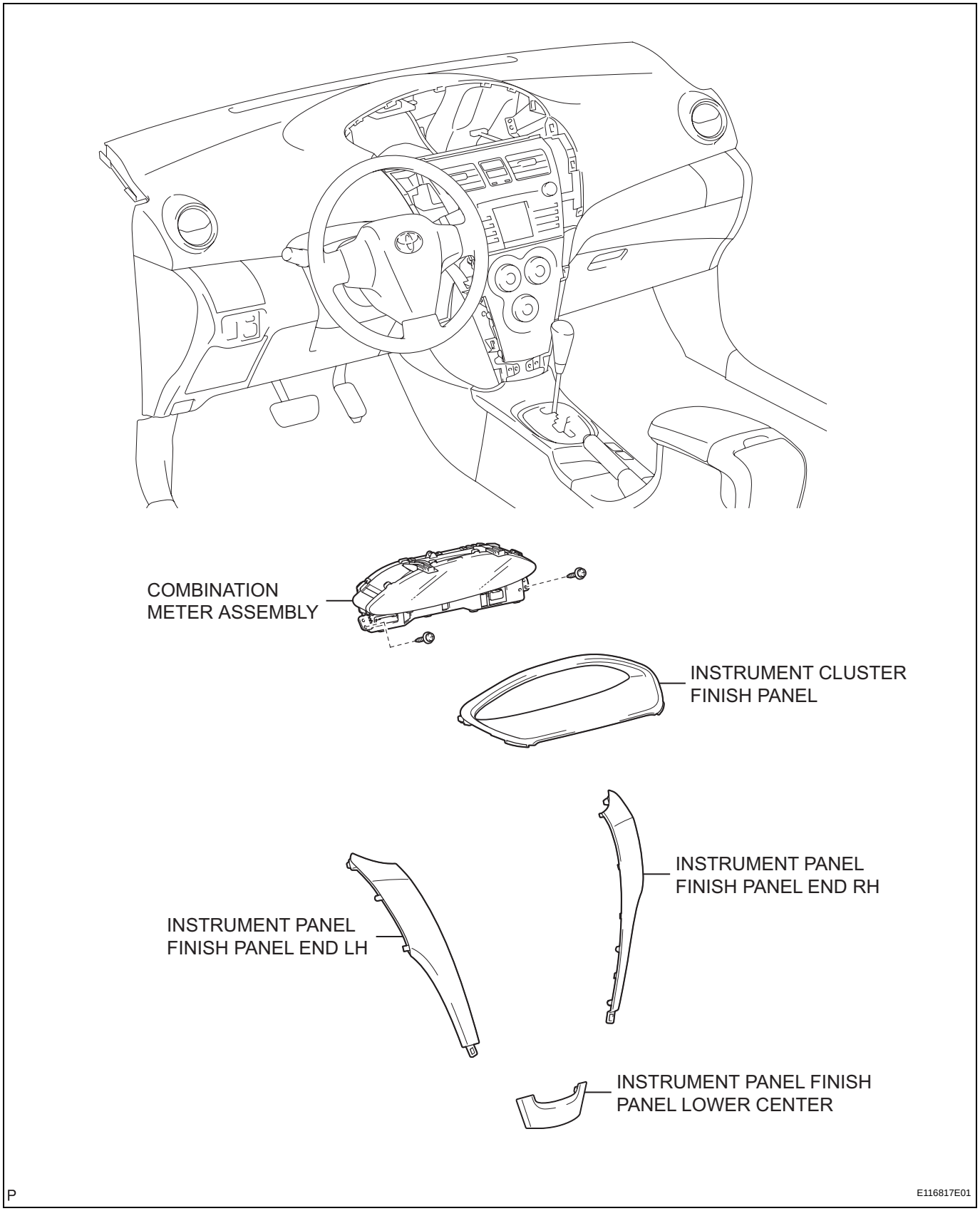

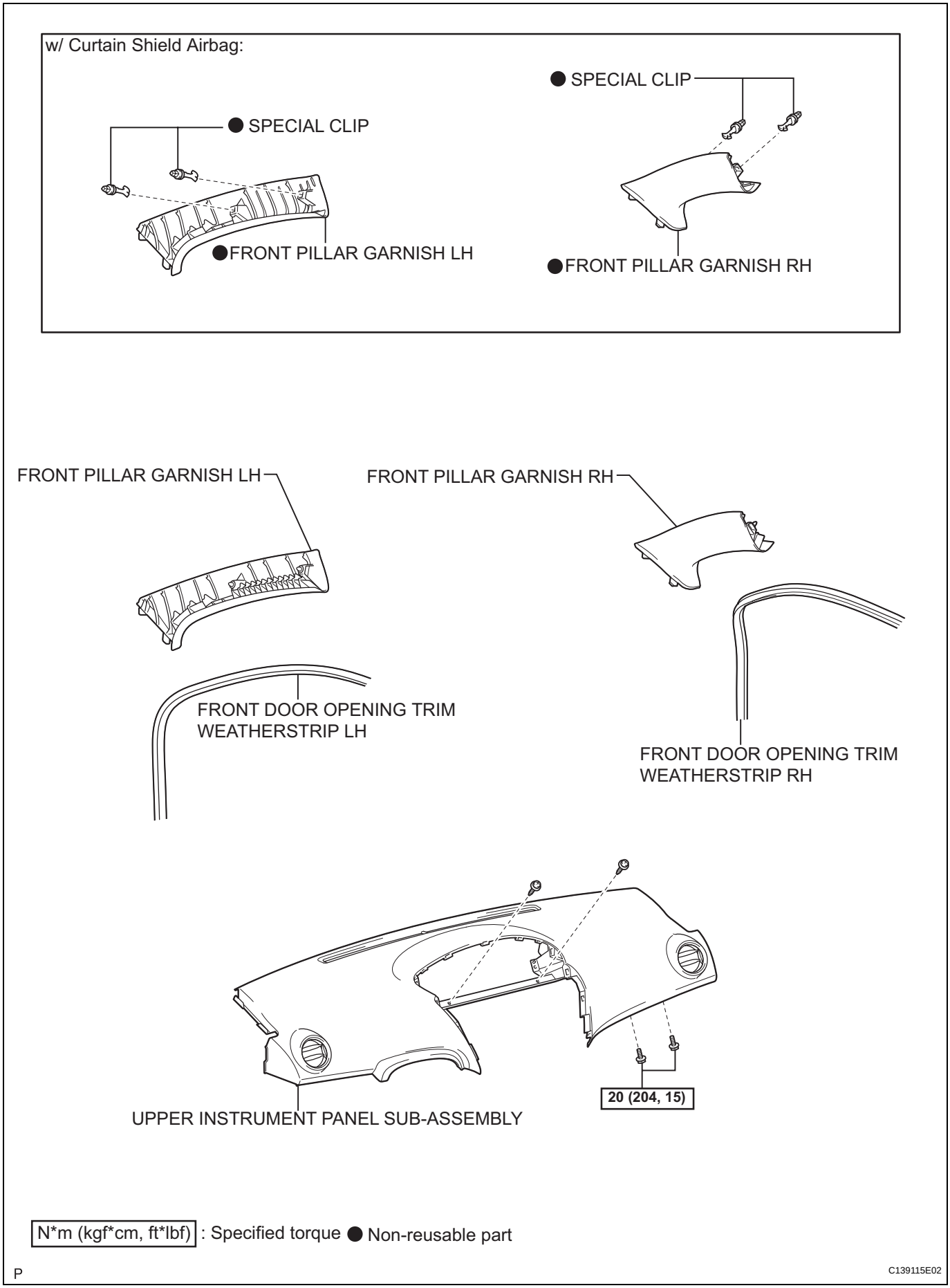
w/ Curtain Shield Airbag:
● SPECIAL CLIP
● SPECIAL CLIP
●FRONT PILLAR GARNISH LH
●FRONT PILLAR GARNISH RH
FRONT PILLAR GARNISH LH
FRONT PILLAR GARNISH RH
FRONT DOOR OPENING TRIM WEATHERSTRIP LH
FRONT DOOR OPENING TRIM WEATHERSTRIP RH
20 (204, 15)
UPPER INSTRUMENT PANEL SUB-ASSEMBLY
N*m (kgf*cm, ft*lbf) : Specified torque ● Non-reusable part
P
C139115E02

SR

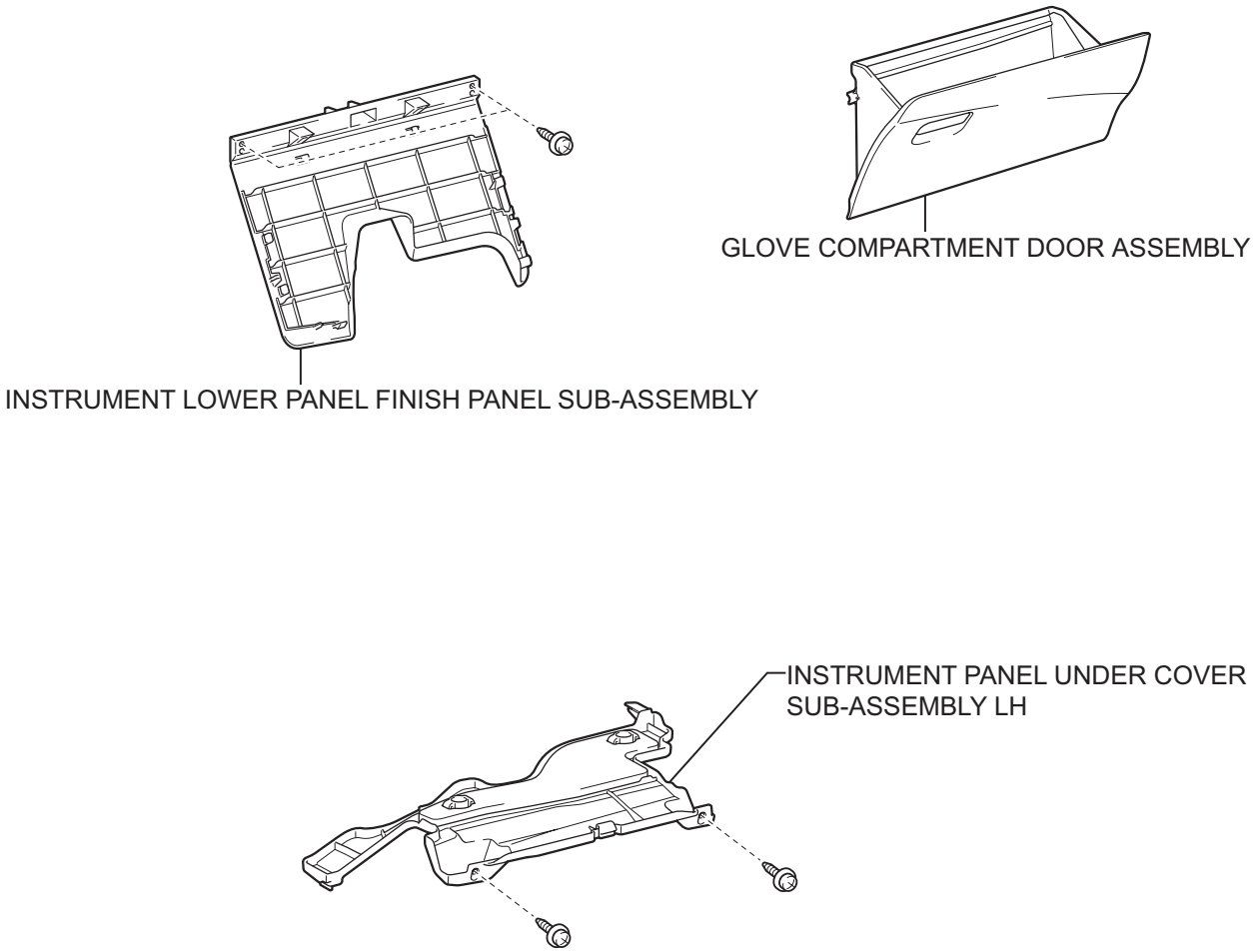

P

C139116E01

for Manual Transaxle:

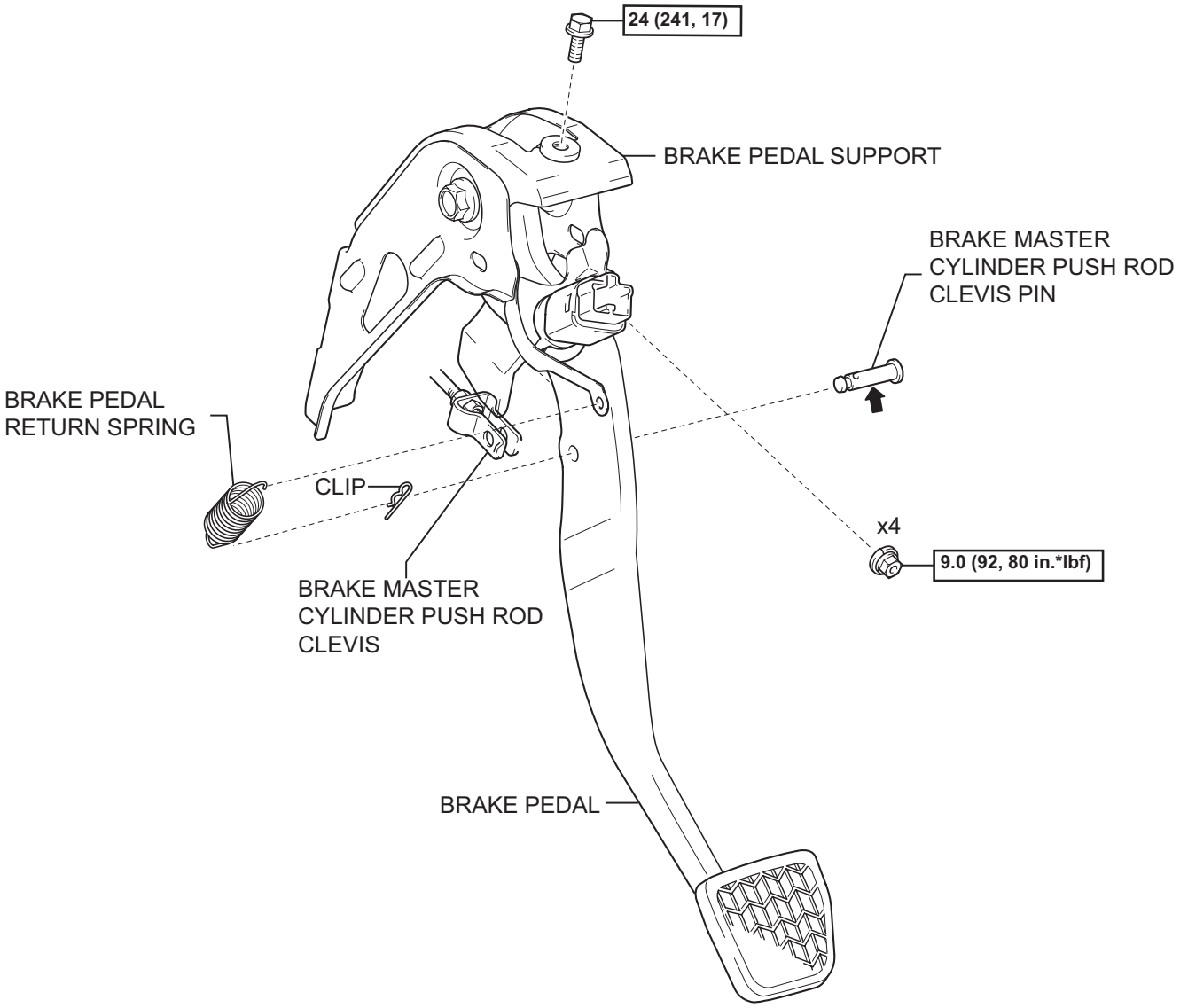

N*m (kgf*cm, ft.*lbf) : Specified torque ⬅ Lithium Soap base glycol grease

P

C118552E01

for Automtic Transaxle:

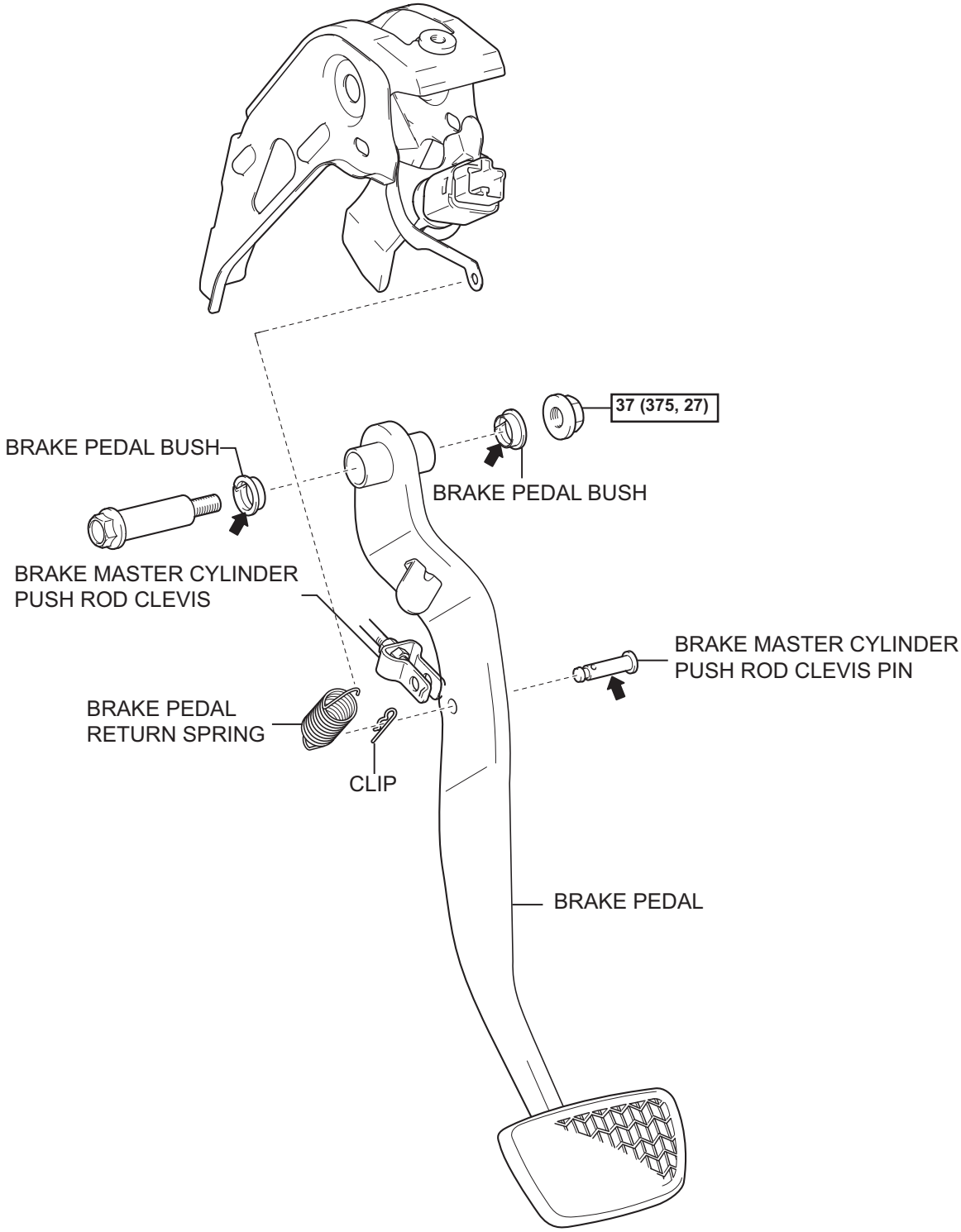

N*m (kgf*cm, ft.*lbf) : Specified torque ⬅ Lithium Soap base glycol grease

P

C118551E01

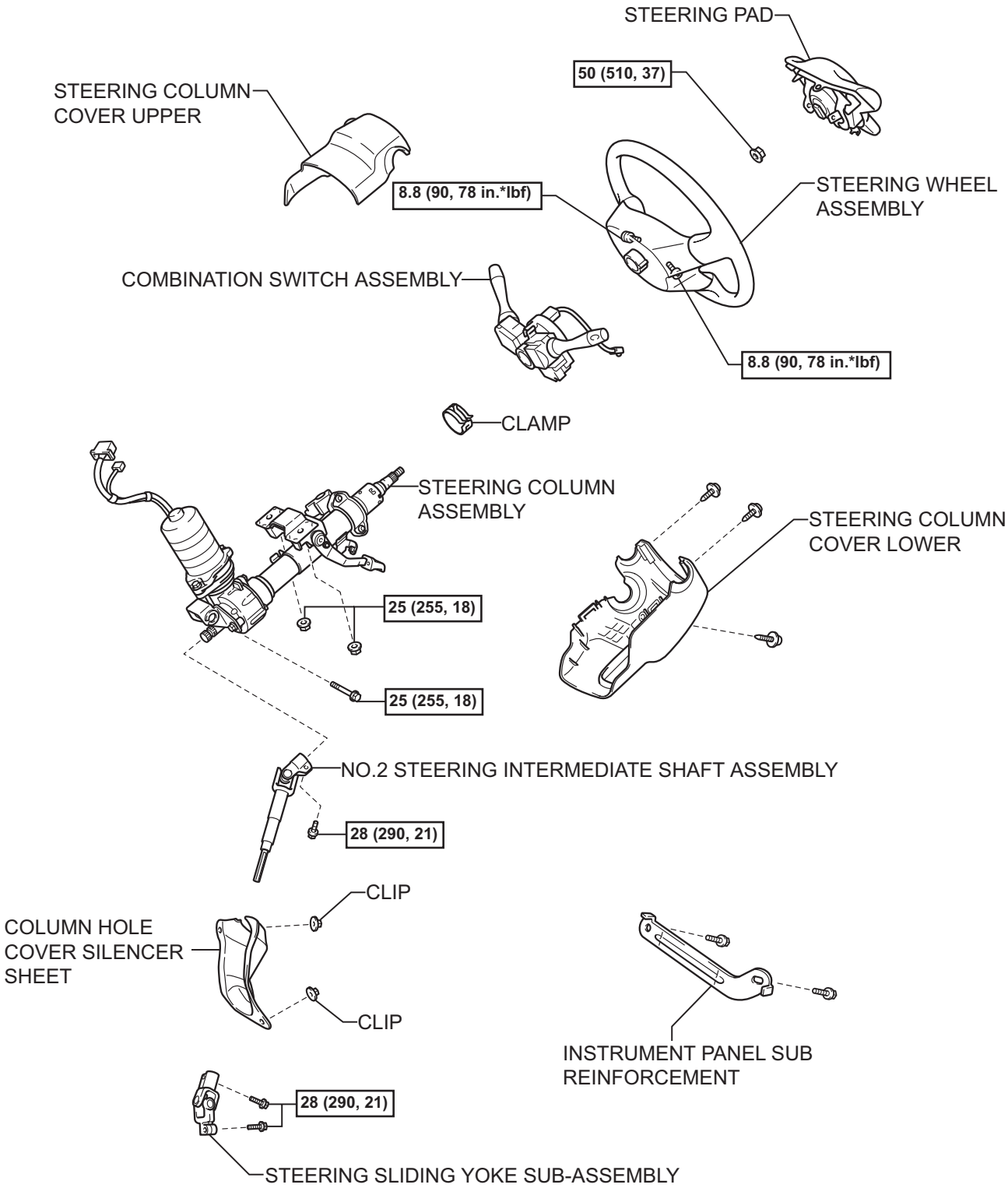

N*m (kgf*cm, ft.*lbf) : Specified torque

N

C139113E01

SR

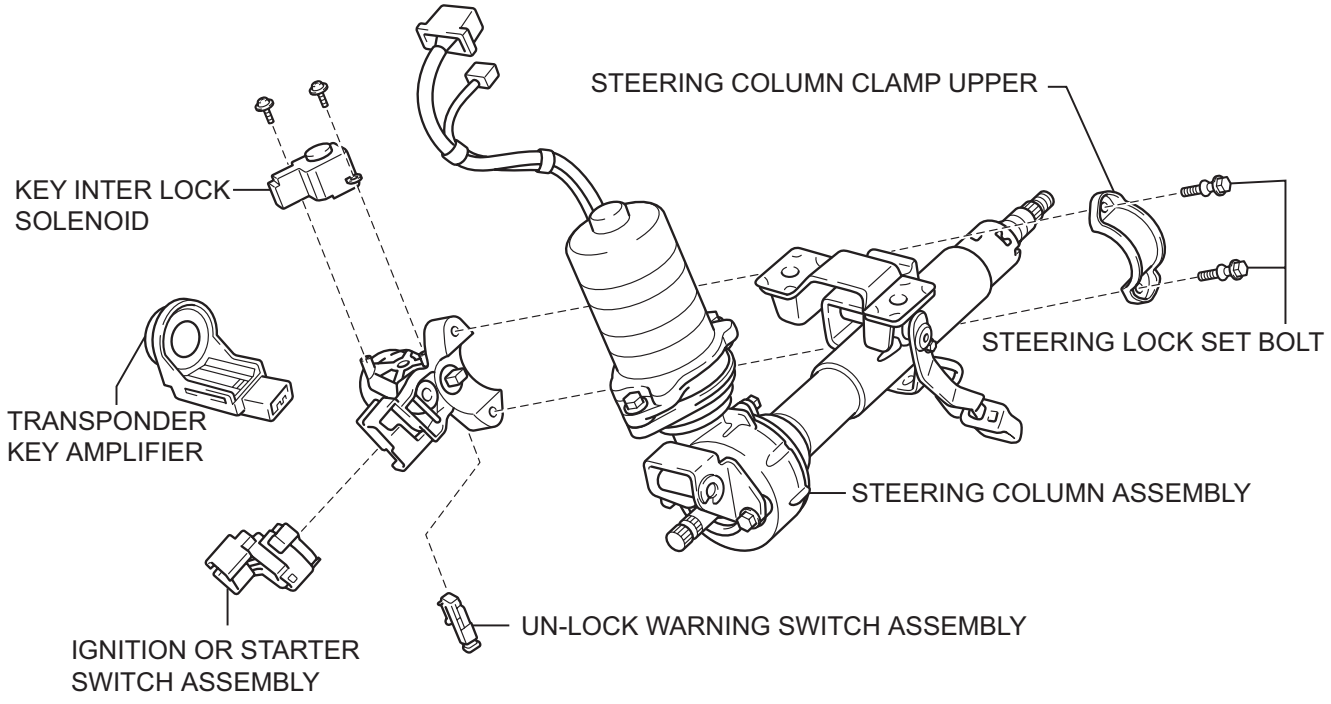

N

C117187E06

REMOVAL

CAUTION:
Some of these service operations affect the SRS airbag system. Read the precautionary notices concerning the SRS airbag system before servicing (See page RS-1).

1. **DISCONNECT CABLE FROM NEGATIVE BATTERY TERMINAL**
2. **PLACE FRONT WHEELS FACING STRAIGHT AHEAD**
3. **REMOVE STEERING PAD (See page RS-309)**
4. **REMOVE STEERING WHEEL ASSEMBLY**
   (a) Remove the nut and place matchmarks on the steering wheel assembly and steering column assembly.

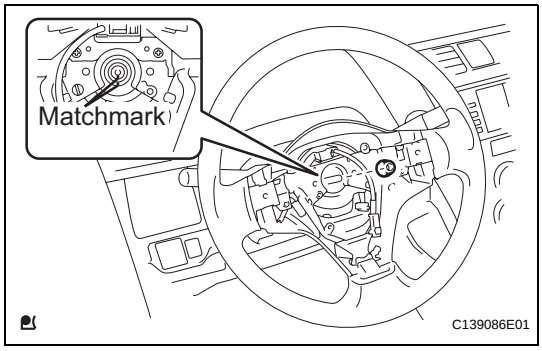

   (b) Using SST, remove the steering wheel assembly.
   NOTICE:
   Apply a small amount of grease to the threads and tip of the SST center bolt before using.

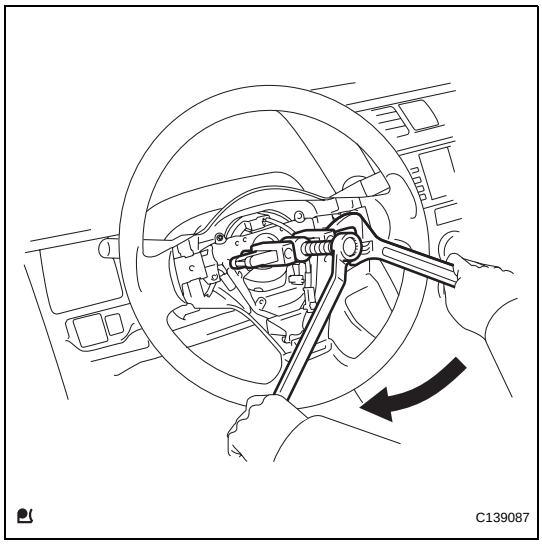

5. **REMOVE STEERING COLUMN COVER**
   (a) Remove the 3 screws, disengage the 2 claws, release the tilt lever and remove the steering column lower cover.

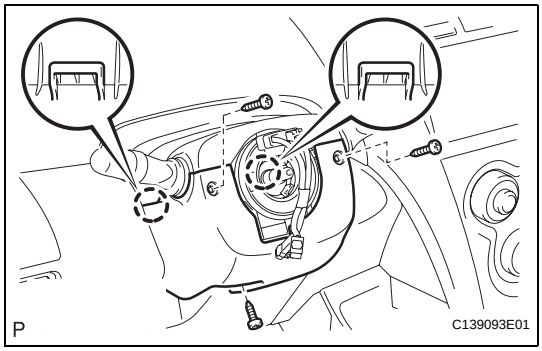

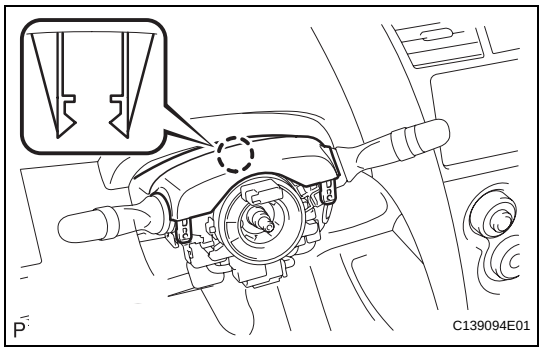

(b) Disengage the claw and remove the steering column upper cover.

6. REMOVE COMBINATION SWITCH ASSEMBLY

(a) Disconnect all connectors from the turn signal switch with spiral cable.

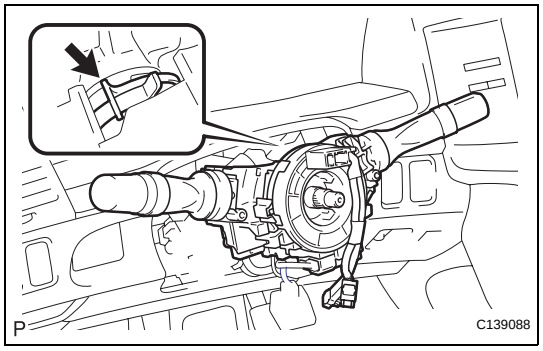

(b) Disengage the clamp indicated by the arrow in the illustration and remove the combination switch assembly from the steering column assembly.

7. REMOVE INSTRUMENT PANEL FINISH PANEL LOWER CENTER (See page ME-138)

8. REMOVE INSTRUMENT PANEL FINISH PANEL END LH (See page ME-138)

9. REMOVE INSTRUMENT PANEL FINISH PANEL END RH (See page ME-138)

10. REMOVE INSTRUMENT CLUSTER FINISH PANEL (See page ME-139)

11. REMOVE COMBINATION METER ASSEMBLY (See page ME-139)

12. SEPARATE FRONT DOOR OPENING TRIM WEATHERSTRIP RH (See page IP-5)

13. SEPARATE FRONT DOOR OPENING TRIM WEATHERSTRIP LH (See page IP-5)

14. REMOVE FRONT PILLAR GARNISH RH (See page IR-18)

15. REMOVE FRONT PILLAR GARNISH LH (See page IR-19)

16. REMOVE GLOVE COMPARTMENT DOOR ASSEMBLY (See page IP-6)

17. REMOVE UPPER INSTRUMENT PANEL SUB-ASSEMBLY (See page IP-6)

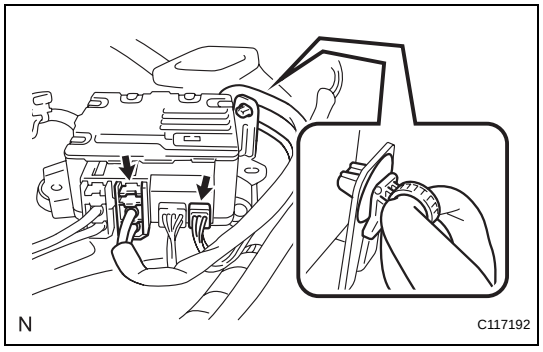

18. DISCONNECT POWER STEERING ECU

(a) Detach the power steering motor harness and torque sensor wire harness clamps from the power steering ECU side.

(b) Disconnect the 2 steering column assembly connectors from the power steering ECU.

19. REMOVE INSTRUMENT PANEL UNDER COVER SUB-ASSEMBLY LH (See page IR-14)

20. REMOVE INSTRUMENT LOWER PANEL FINISH PANEL SUB-ASSEMBLY (See page IP-45)

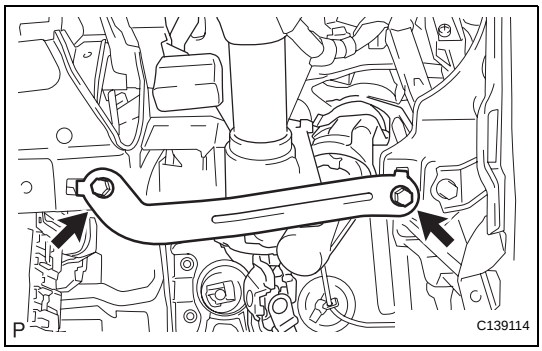

21. REMOVE INSTRUMENT PANEL SUB REINFORCEMENT

(a) Remove the 2 bolts and remove the reinforcement instrument panel sub.

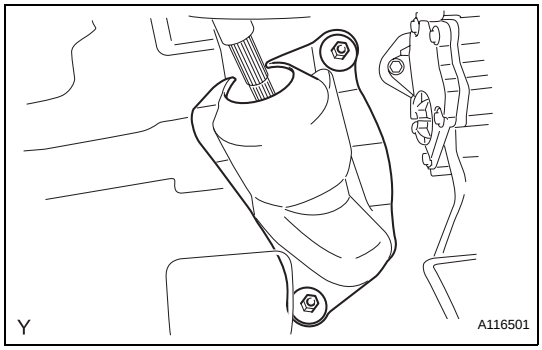

22. REMOVE COLUMN HOLE COVER SILENCER SHEET

(a) Pull back the floor carpet, remove the 2 clips and remove the column hole cover silencer sheet.

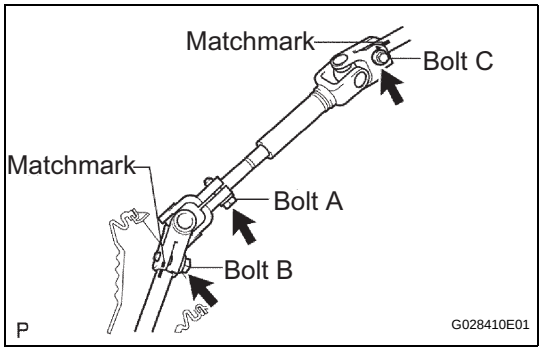

23. REMOVE NO.2 STEERING INTERMEDIATE SHAFT ASSEMBLY

(a) Loosen bolt A.
(b) Place matchmarks on the steering intermediate assembly and steering gear assembly.
(c) Remove bolt B and detach the steering intermediate assembly from the steering gear assembly.
(d) Place matchmarks on the steering intermediate assembly and steering column assembly.
(e) Remove bolt C and detach the steering intermediate shaft assembly from the steering column assembly.

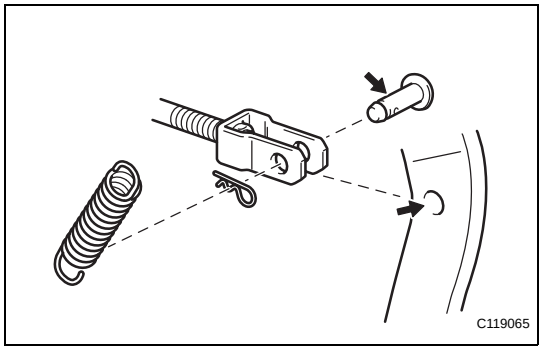

24. REMOVE BRAKE PEDAL PAD (for Automatic Transaxle)

(a) Using needle-nose pliers, remove the brake pedal return spring.
(b) Remove the clip from the brake master cylinder push rod clevis pin.
(c) Remove the brake master cylinder push rod clevis pin and detach the push rod clevis from the brake pedal.
(d) Remove the bolt, nut and 2 brake pedal bushes, and remove the brake pedal assembly.

25. REMOVE BRAKE MASTER CYLINDER PUSH ROD CLEVIS (for Manual Transaxle) (See page BR-20)

26. REMOVE BRAKE PEDAL SUPPORT (for Manual Transaxle) (See page BR-21)

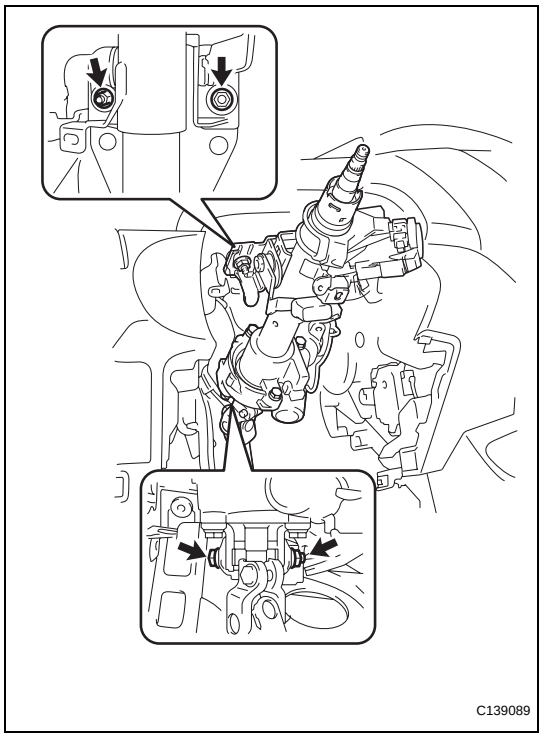

27. REMOVE STEERING COLUMN ASSEMBLY

(a) Disconnect all connectors and detach all wire harness clamps from the steering column assembly.

(b) Remove the bolt and 2 nuts and remove the steering column assembly from the instrument panel reinforcement assembly.

DISASSEMBLY

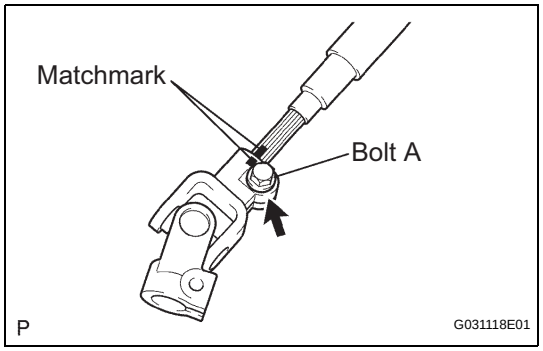

1. REMOVE STEERING SLIDING YOKE SUB-ASSEMBLY

(a) Place matchmarks on steering intermediate shaft assembly No. 2 and the steering sliding yoke.

(b) Remove bolt A and remove the steering sliding yoke from steering intermediate shaft No. 2.

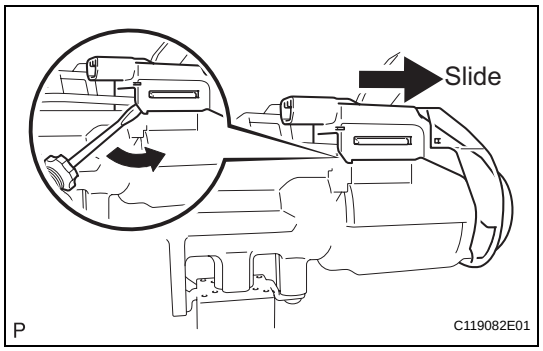

2. REMOVE TRANSPONDER KEY AMPLIFIER

(a) Disengage the 2 claws and slide the transponder key amplifier in the direction shown in the illustration, to detach it from the steering column upper with switch bracket assembly.

3. REMOVE STEERING COLUMN UPPER WITH SWITCH BRACKET ASSEMBLY

(a) Fix the steering column assembly in a vise between aluminum plates.

NOTICE:

Do not overtighten the vise.

(b) Using a drill, drill a hole in each of the 2 steering lock set bolts, to insert an screw extractor.

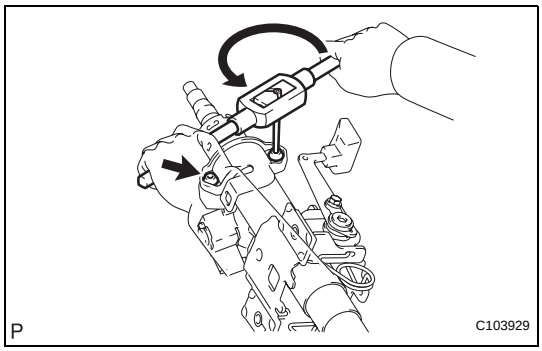

(c) Using the screw extractor, remove the 2 steering lock set bolts and remove the steering column upper with switch bracket assembly and steering column clamp upper.

4. REMOVE IGNITION SWITCH LOCK CYLINDER ASSEMBLY

(a) Turn the ignition switch to on (ACC).

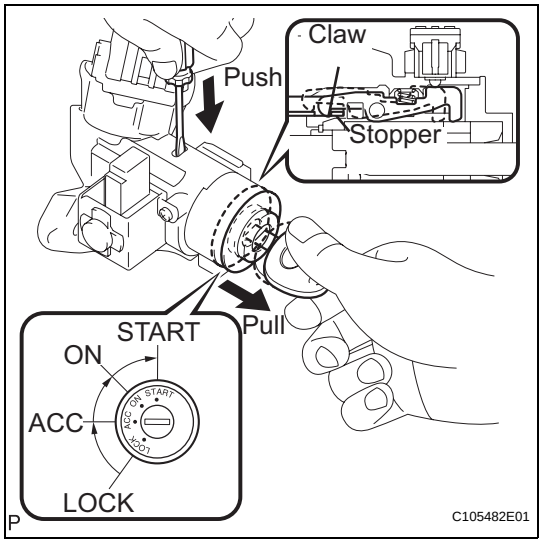

(b) Insert the tip of a screwdriver into the hole in the steering column bracket assembly upper, as shown in the illustration, and pull the ignition switch lock cylinder assembly out until its claw comes into contact with the stopper of the steering column bracket assembly upper.

NOTICE:

Pull the ignition switch lock cylinder assembly out until its claw comes into contact with the stopper of the steering column bracket assembly upper. Otherwise, the following procedure cannot be conducted properly.

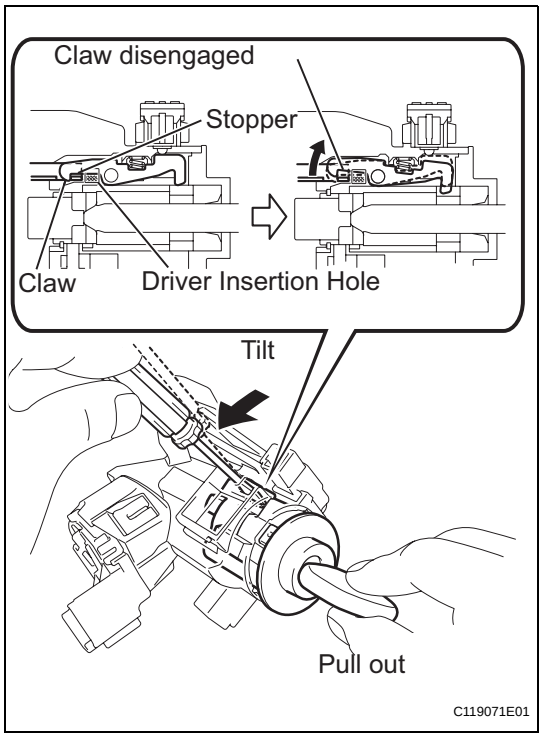

(c) Insert the tip of a screwdriver into the hole in the steering column bracket and tilt it downward, as shown in the illustration, to disengage the claw of the ignition switch lock cylinder. Then pull out the ignition switch lock cylinder.

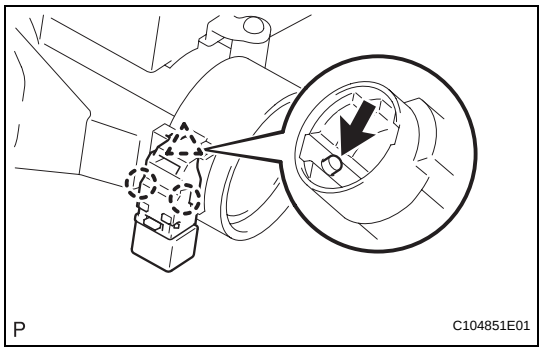

5. REMOVE UN-LOCK WARNING SWITCH ASSEMBLY

(a) Push up the unlock warning switch assembly center portion to disengage the 2 claws.
HINT:
Slide the unlock warning switch assembly, in the direction shown by the arrow in the illustration, to remove it.

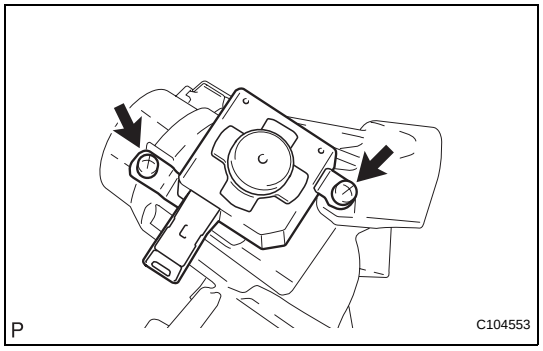

6. REMOVE KEY INTER LOCK SOLENOID

(a) for Automtic Transaxle:
(1) Remove the 2 screws and remove the key lock solenoid from the steering column bracket assembly upper.

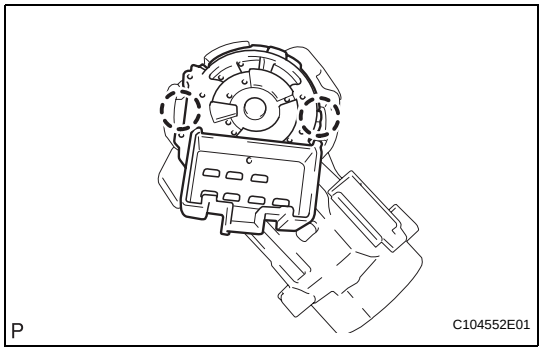

7. REMOVE IGNITION OR STARTER SWITCH ASSEMBLY

(a) Disengage the 2 claws and remove the ignition (starter) switch assembly from the steering column bracket assembly upper.

REASSEMBLY

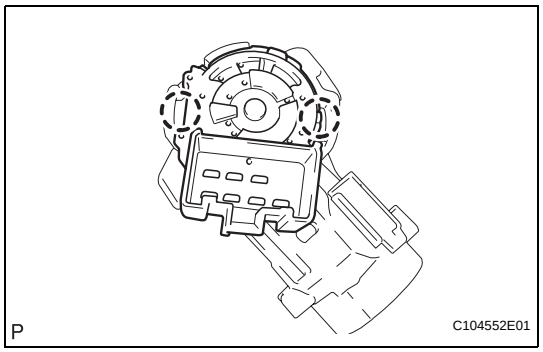

1. INSTALL IGNITION OR STARTER SWITCH ASSEMBLY

(a) Engage the 2 claws to install the ignition (starter) switch assembly onto the steering column bracket assembly upper.

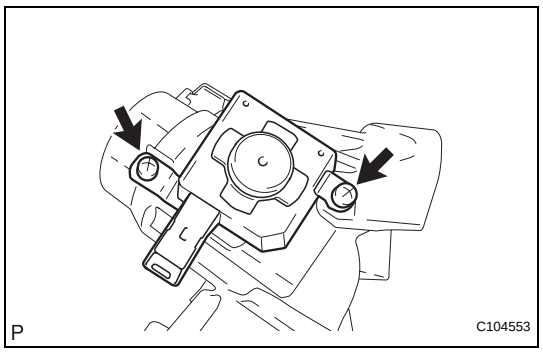

2. INSTALL KEY INTER LOCK SOLENOID

(a) for Automtic Transaxle:
(1) Install the key interlock solenoid onto the steering column bracket assembly upper with the 2 screws.

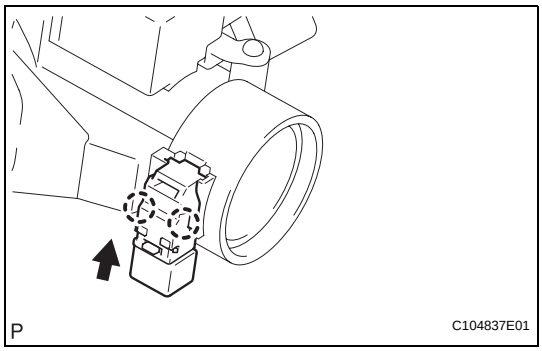

3. INSTALL UN-LOCK WARNING SWITCH ASSEMBLY

(a) Engage the 2 claws to install the un-lock warning switch assembly onto the steering column bracket assembly upper.
HINT:
Slide the unlock warning switch assembly, in the direction shown by the arrow in the illustration, to install it.

4. INSTALL IGNITION SWITCH LOCK CYLINDER ASSEMBLY

(a) Turn the ignition switch to on (ACC).

(b) Install the ignition switch lock cylinder assembly into the steering column bracket assembly upper.

(c) Make sure that the ignition switch lock cylinder assembly is securely fixed onto the ignition switch lock cylinder assembly.

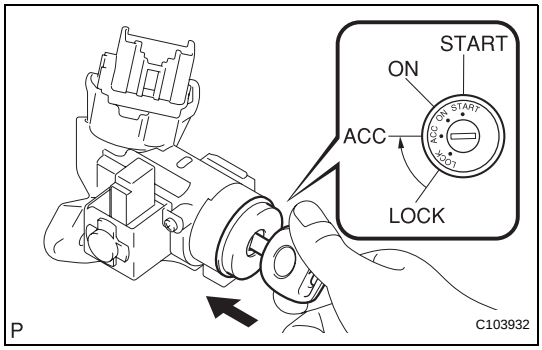

5. INSPECT STEERING LOCK OPERATION

(a) Remove the key and check that the steering lock function is activated.

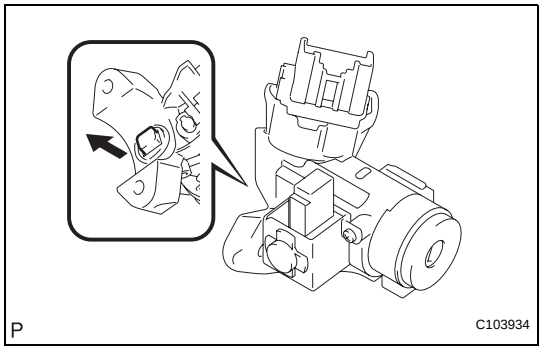

(b) Insert the key, turn the ignition switch to on (ACC) and check that the steering lock function is inactivated.

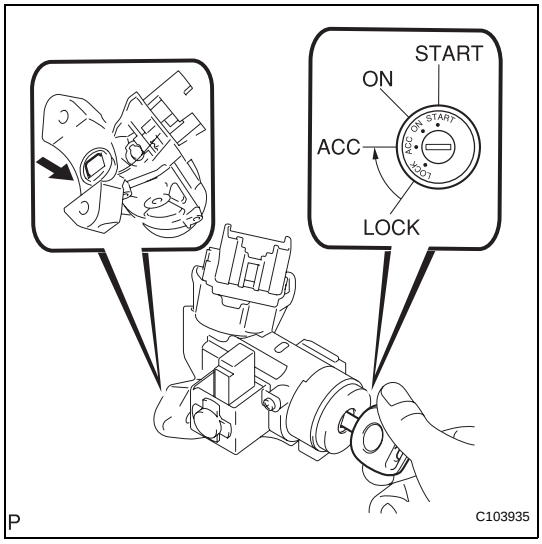

6. INSTALL STEERING COLUMN UPPER W/SWITCH BRACKET ASSEMBLY

(a) Fix the steering column assembly in a vise between aluminum plates.
NOTICE:
Do not overtighten the vise.

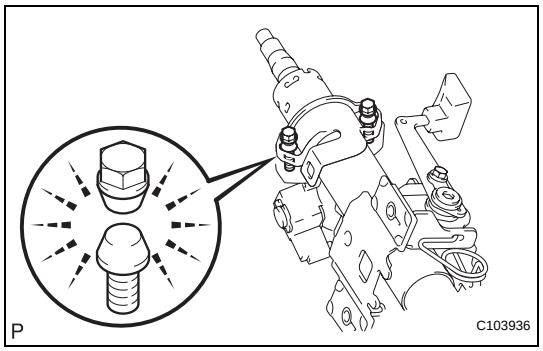

(b) Install the steering column upper with switch bracket assembly and steering column clamp upper with 2 new steering lock set bolts, and then tighten the bolts until their heads come off.

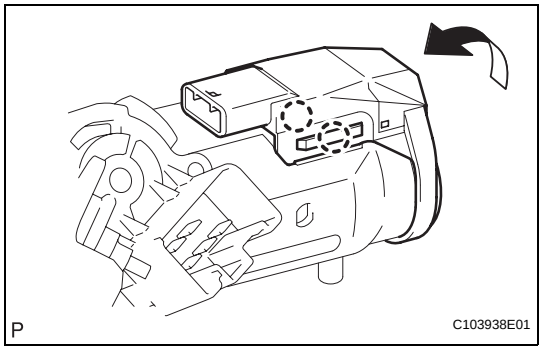

7. INSTALL TRANSPONDER KEY AMPLIFIER

(a) Engage the 2 claws and install the transponder key amplifier onto the steering column upper with the switch bracket.

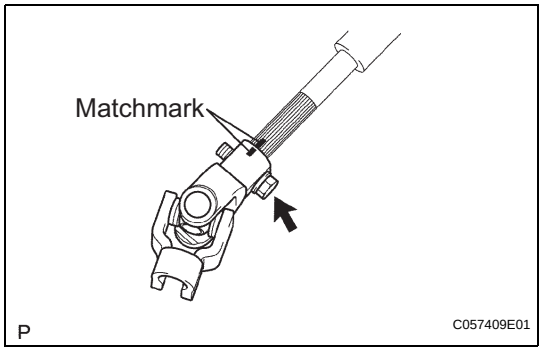

8. INSTALL STEERING SLIDING YOKE SUB-ASSEMBLY

(a) Align the matchmarks on steering intermediate shaft assembly No. 2 and steering sliding yoke and provisionally install them with the bolt.

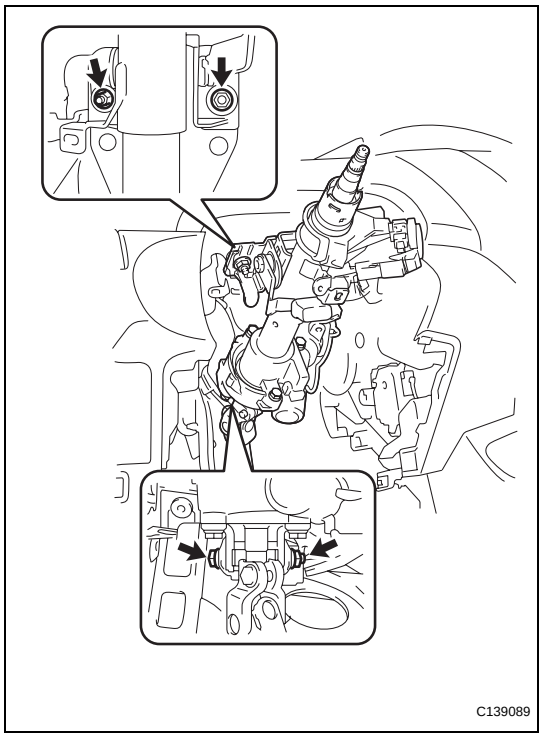

INSTALLATION

1. INSTALL STEERING COLUMN ASSEMBLY

(a) Install the steering column assembly onto the instrument panel reinforcement assembly with the bolt and 2 nuts.
Torque: 25 N*m (255 kgf*cm, 18 ft.*lbf)

(b) Connect all the connectors and clamp the wire harnesses onto the steering column assembly bracket.

2. INSTALL BRAKE PEDAL (for Automatic Transaxle)

(a) Apply MP grease No. 2 to the brake master cylinder push rod clevis pin and installation surfaces.

(b) Install the 2 brake pedal bushes, and install the brake pedal with the nut and brake pedal shaft.
Torque: 37 N*m (375 kgf*cm, 27 ft.*lbf)

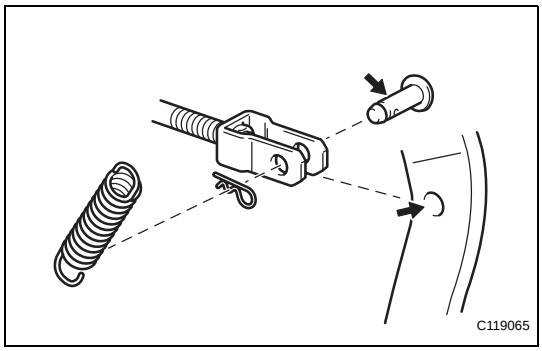

(c) Apply lithium soap base glycol grease to the brake master cylinder push rod clevis pin and installation surfaces.

(d) Connect the brake master cylinder push rod clevis to the brake pedal with the brake master cylinder push rod clevis pin, install the clip onto the brake master cylinder push rod clevis pin, and then install the brake pedal return spring.

3. INSTALL BRAKE PEDAL SUPPORT (for Manual Transaxle) (See page BR-21)

4. INSTALL BRAKE MASTER CYLINDER PUSH ROD CLEVIS (for Manual Transaxle) (See page BR-21)

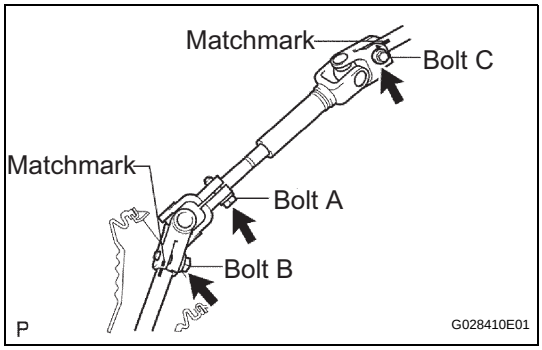

5. INSTALL NO.2 STEERING INTERMEDIATE SHAFT ASSEMBLY

(a) Connect all the connectors and clamp the wire harnesses onto the steering column assembly bracket.

(b) Align the matchmarks on steering intermediate shaft assembly No. 2 and the steering sliding yoke and provisionally install them with bolt C.
Torque: 28 N*m (290 kgf*cm, 21 ft.*lbf)

(c) Align the matchmarks on the steering sliding yoke and steering gear assembly and install them with bolt B.
Torque: 28 N*m (290 kgf*cm, 21 ft.*lbf)

(d) Tighten bolt A.
Torque: 28 N*m (290 kgf*cm, 21 ft.*lbf)

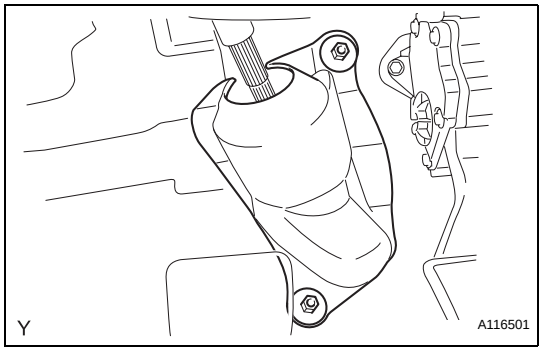

6. INSTALL COLUMN HOLE COVER SILENCER SHEET

(a) Install the column hole cover plate with the 2 clips.

(b) Install the floor carpet.

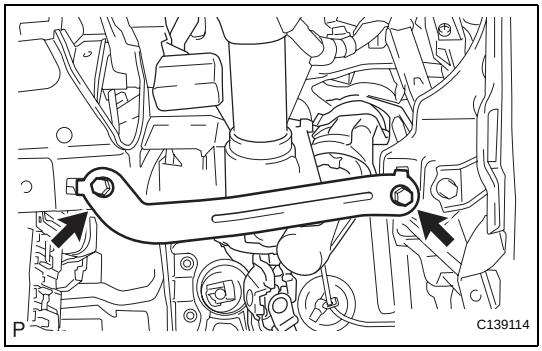

7. INSTALL INSTRUMENT PANEL SUB REINFORCEMENT

(a) Align the 2 claws and install the reinforcement instrument panel sub with the 2 bolts.

8. INSTALL INSTRUMENT LOWER PANEL FINISH PANEL SUB-ASSEMBLY (See page IP-54)

9. INSTALL INSTRUMENT PANEL UNDER COVER SUB-ASSEMBLY LH (See page IR-35)

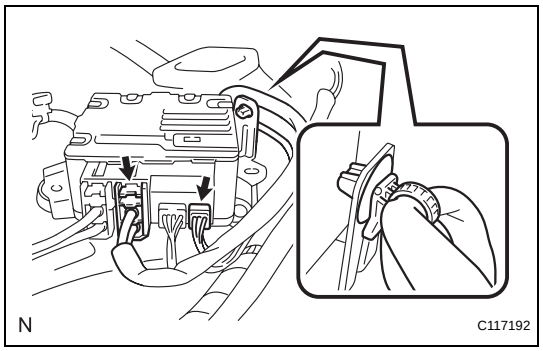

10. INSTALL POWER STEERING ECU

(a) Connect the 2 steering column assembly connectors to the power steering ECU.

(b) Install the power steering motor harness and torque sensor wire harness clamps onto the side of the power steering ECU.

(c) Tilt the steering column assembly up and down to make sure that the power steering motor harness and torque sensor wire harness do not interfere with any components.

11. INSTALL UPPER INSTRUMENT PANEL SUB-ASSEMBLY (See page IP-11)

12. INSTALL GLOVE COMPARTMENT DOOR ASSEMBLY (See page IP-13)

13. INSTALL FRONT PILLAR GARNISH RH (See page IR-29)

14. INSTALL FRONT PILLAR GARNISH LH (See page IR-30)

15. INSTALL FRONT DOOR OPENING TRIM WEATHERSTRIP RH (See page IP-14)

16. INSTALL FRONT DOOR OPENING TRIM WEATHERSTRIP LH (See page IP-14)

17. INSTALL COMBINATION METER ASSEMBLY (See page ME-140)

18. INSTALL INSTRUMENT CLUSTER FINISH PANEL (See page ME-140)

19. INSTALL INSTRUMENT PANEL FINISH PANEL END RH (See page ME-141)

20. INSTALL INSTRUMENT PANEL FINISH PANEL END LH (See page ME-141)

21. INSTALL INSTRUMENT PANEL FINISH PANEL LOWER CENTER (See page ME-142)

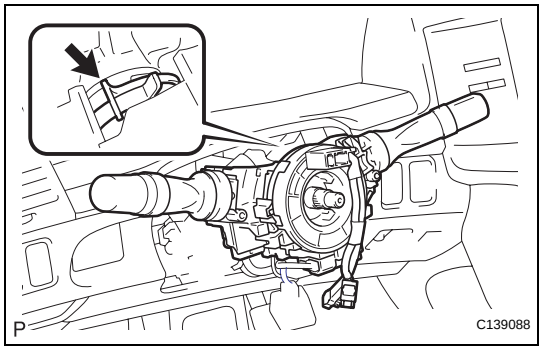

22. INSTALL COMBINATION SWITCH ASSEMBLY

(a) Install the combination switch assembly onto the steering column assembly with the clamp.

(b) Connect all the connectors to the turn signal switch with spiral cable.

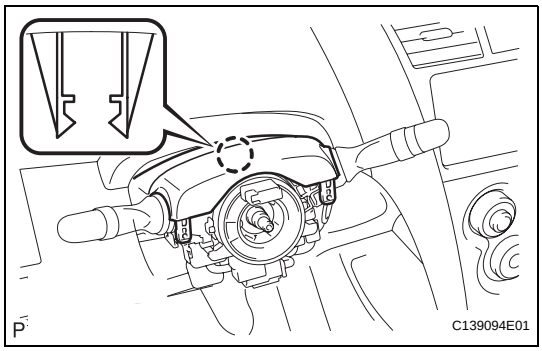

23. INSTALL STEERING COLUMN COVER

(a) Engage the claw to install the steering column upper cover.

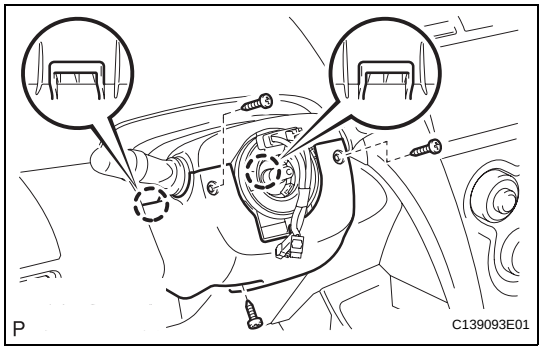

(b) Engage the 2 claws to install the steering column lower cover.

(c) Install the 3 screws.

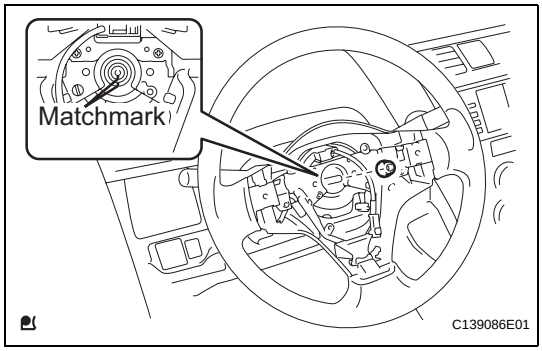

24. INSTALL STEERING WHEEL ASSEMBLY

(a) Align the matchmarks and install the steering wheel assembly onto the steering column assembly.

(b) Install the nut.
Torque: 50 N*m (510 kgf*cm, 37 ft.*lbf)

(c) Connect all connectors to the spiral cable.

25. INSTALL STEERING PAD (See page RS-310)

26. POSITION FRONT WHEELS FACING STRAIGHT AHEAD

27. CHECK SRS WARNING LIGHT
(See page RS-31)

28. PERFORM CALIBRATION OF TORQUE SENSOR ZERO POINT
(See page PS-12)

STEERING COLUMN ASSEMBLY (for Hatchback)

COMPONENTS

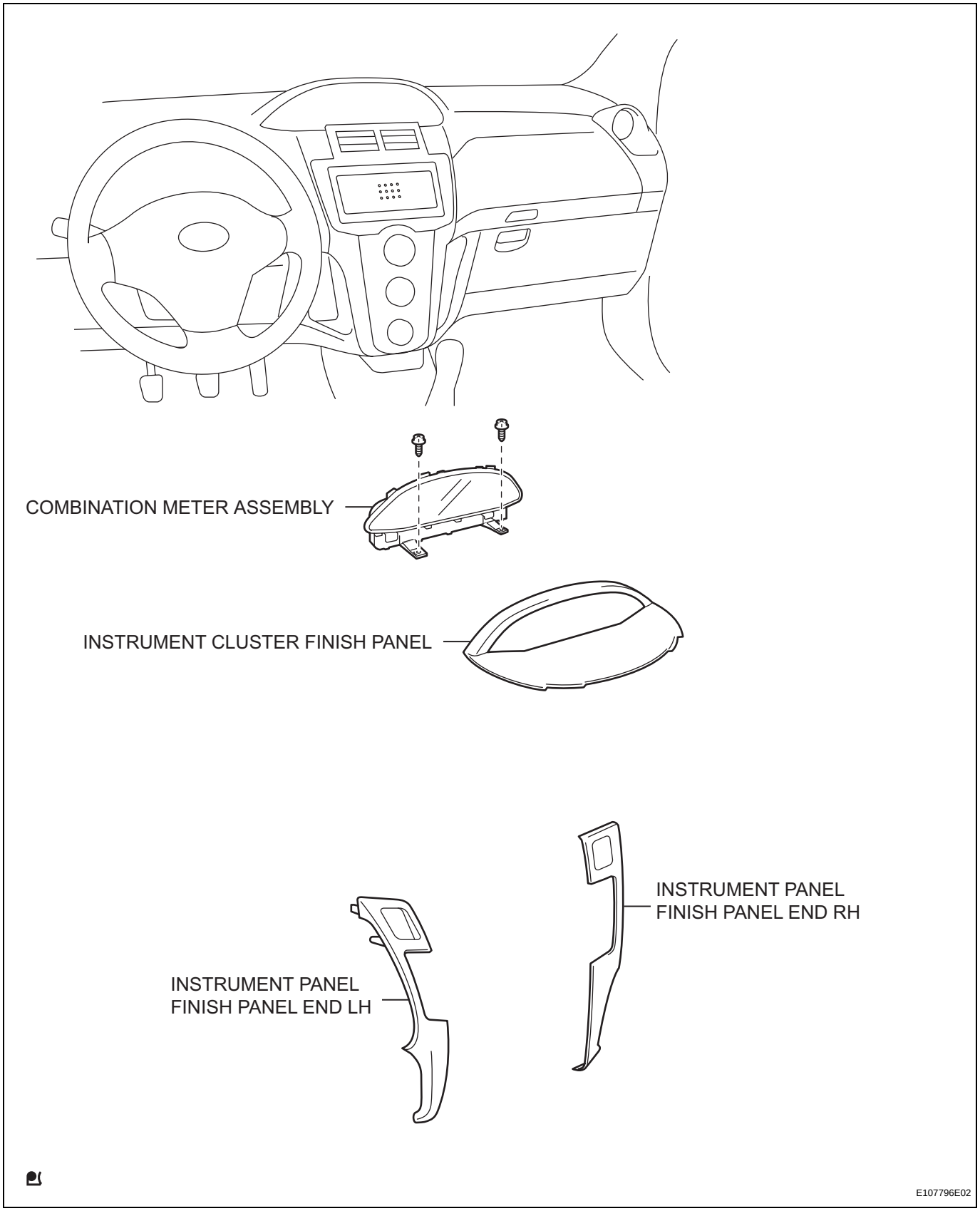

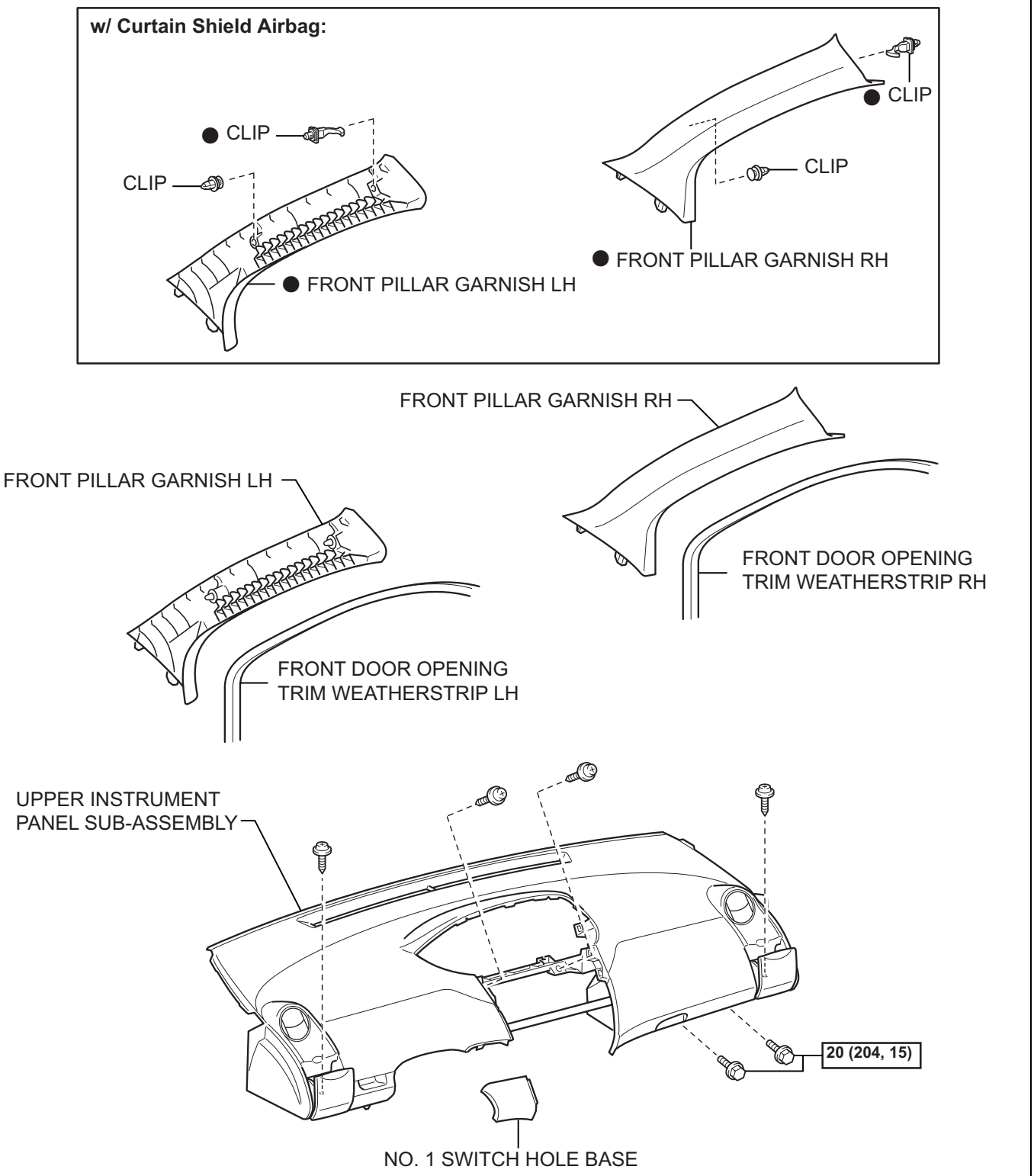

SR

N*m (kgf*cm, ft.*lbf) : Specified torque ● Non-reusable part

O

C119857E02

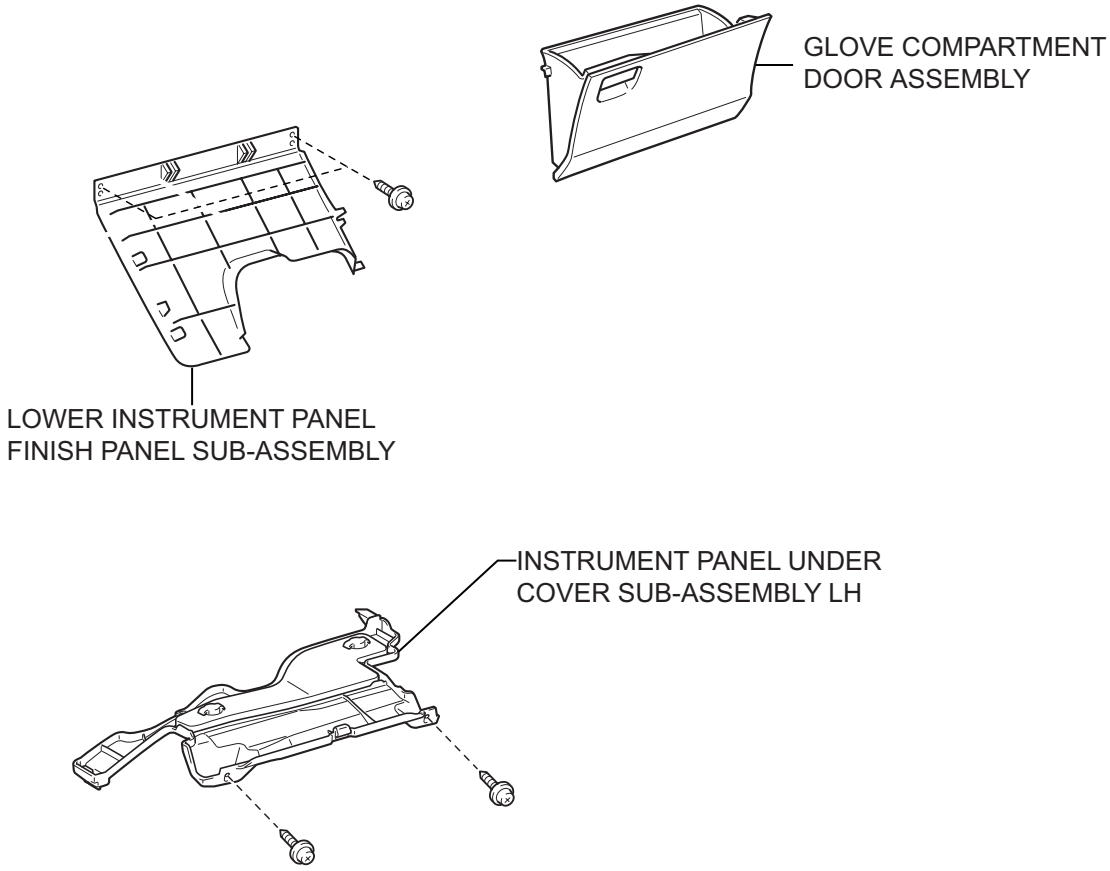
GLOVE COMPARTMENT
DOOR ASSEMBLY
LOWER INSTRUMENT PANEL
FINISH PANEL SUB-ASSEMBLY
INSTRUMENT PANEL UNDER
COVER SUB-ASSEMBLY LH

C119858E02

for Manual Transaxle:

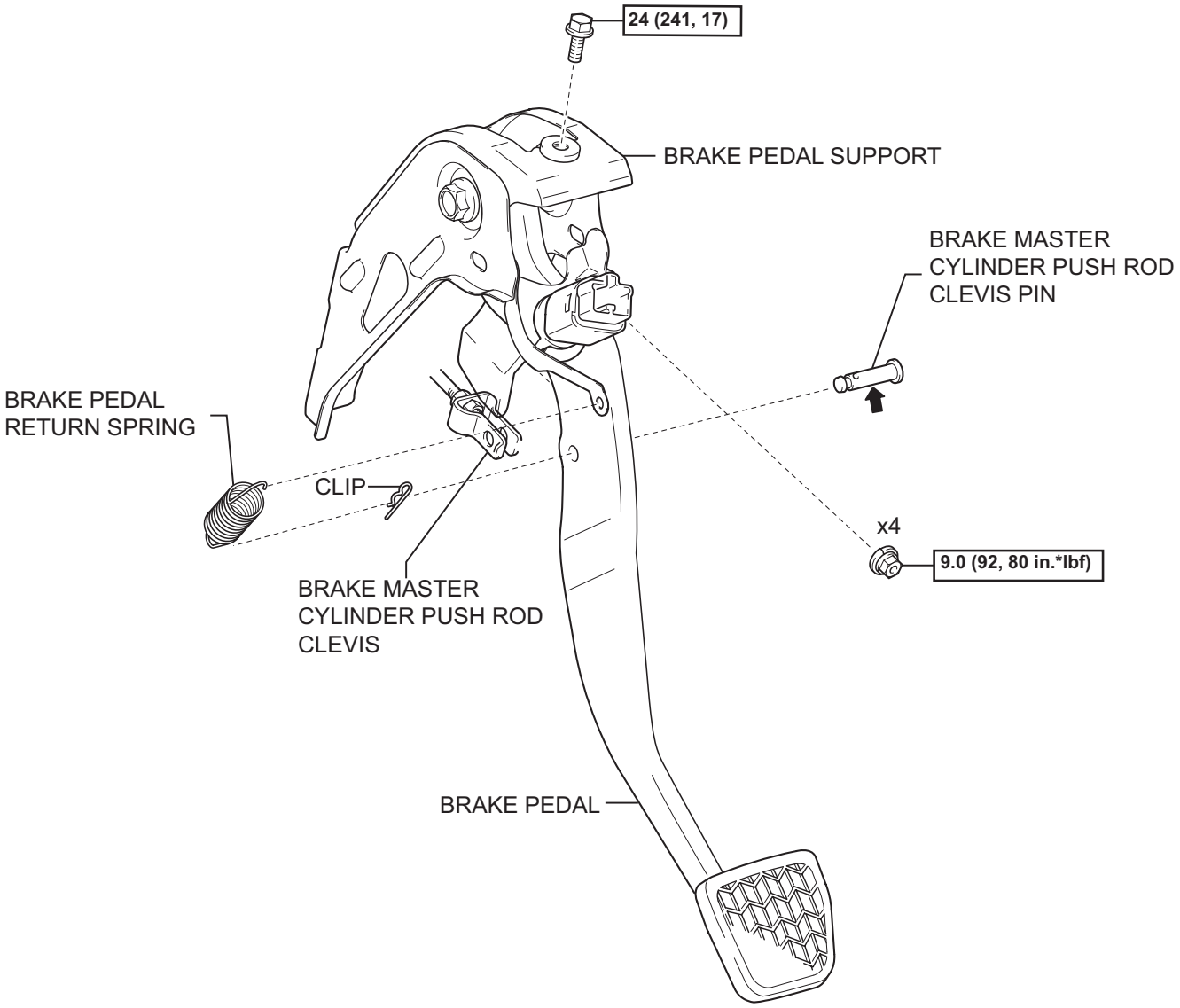

N*m (kgf*cm, ft.*lbf) : Specified torque ⬅ Lithium Soap base glycol grease

P

C118552E01

for Automtic Transaxle:

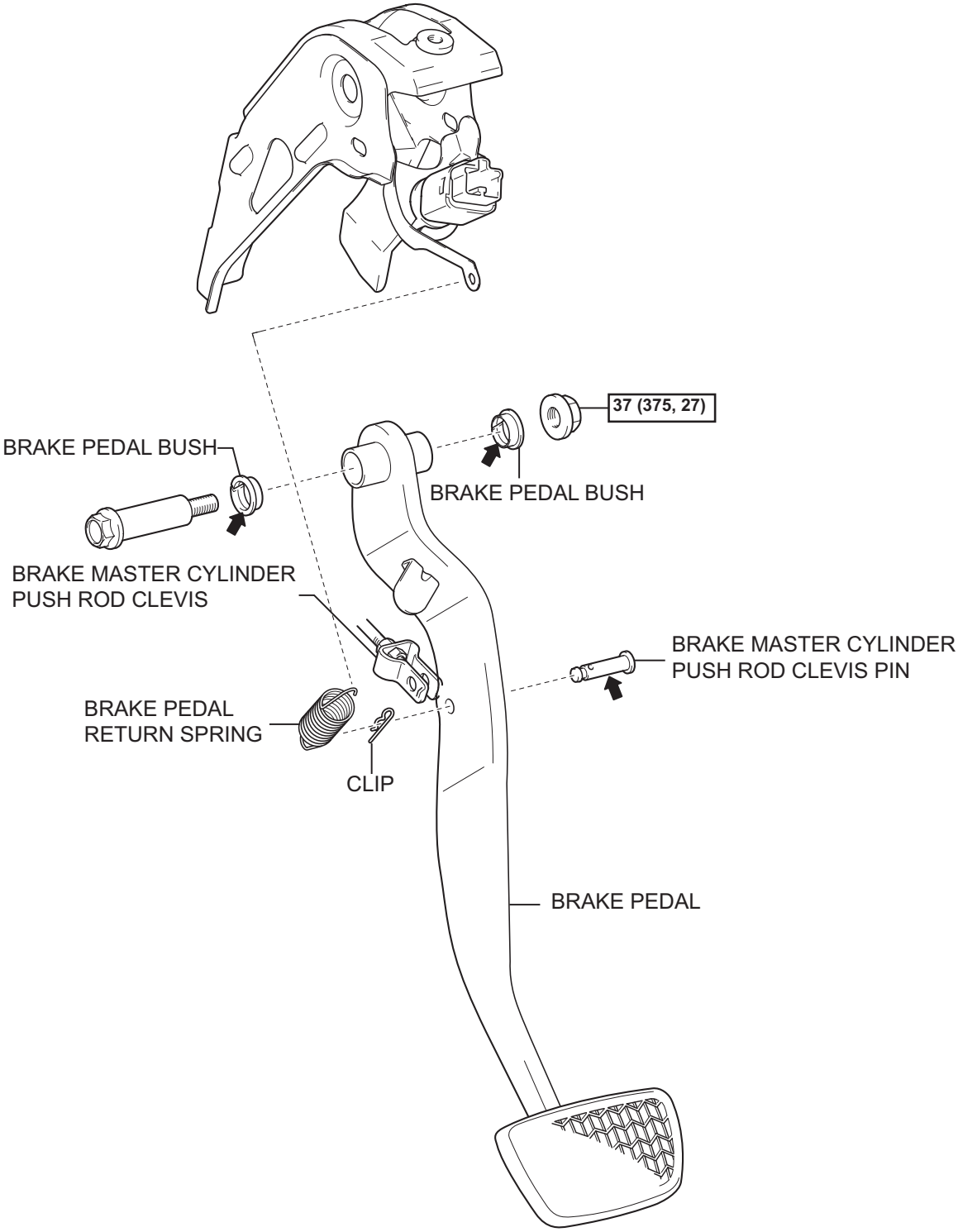

N*m (kgf*cm, ft.*lbf) : Specified torque ⬅ Lithium Soap base glycol grease

P

C118551E01

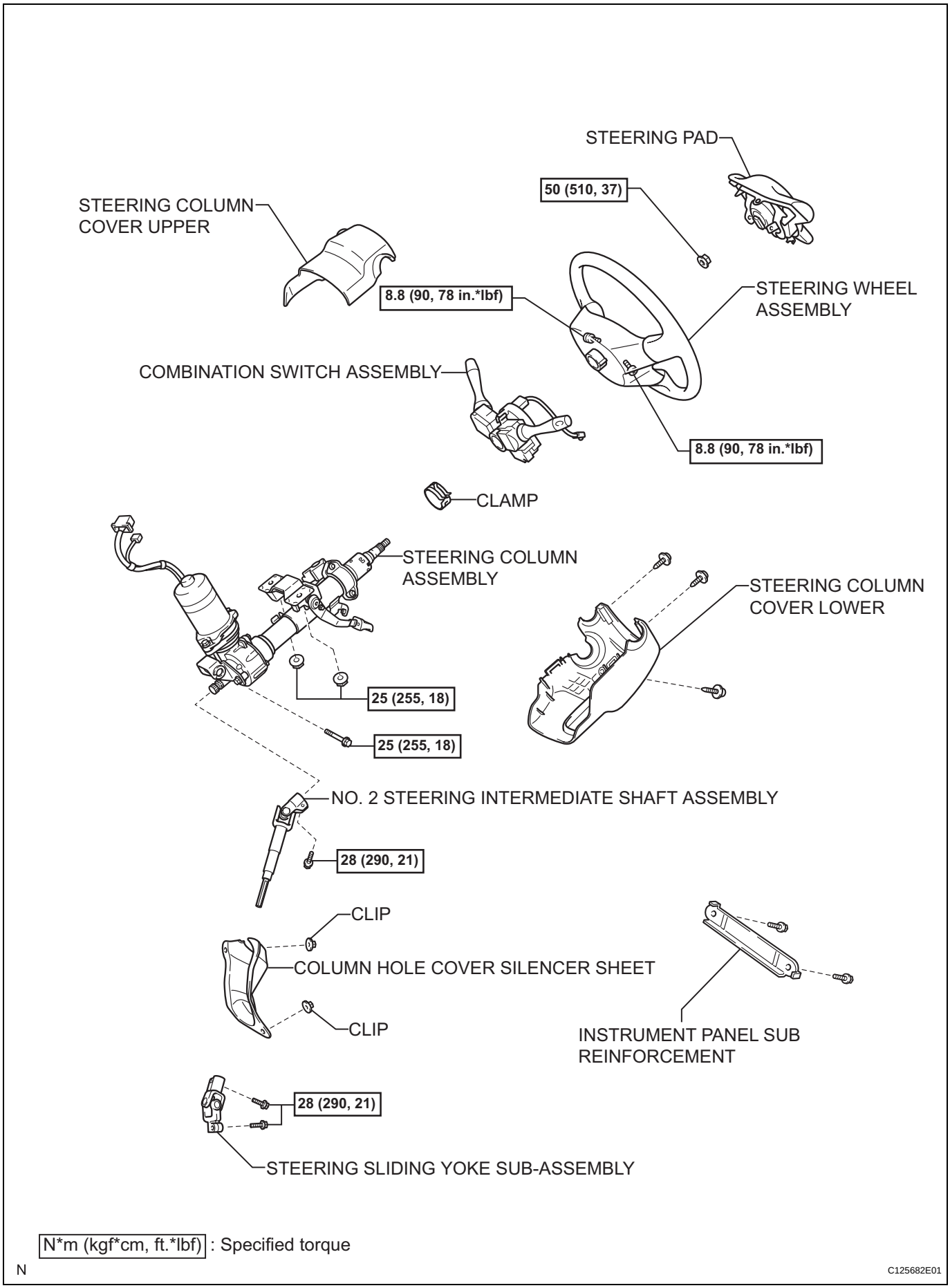
STEERING PAD
50 (510, 37)
STEERING COLUMN COVER UPPER
8.8 (90, 78 in.*lbf)
STEERING WHEEL ASSEMBLY
COMBINATION SWITCH ASSEMBLY
8.8 (90, 78 in.*lbf)
CLAMP
STEERING COLUMN ASSEMBLY
STEERING COLUMN COVER LOWER
25 (255, 18)
25 (255, 18)
NO. 2 STEERING INTERMEDIATE SHAFT ASSEMBLY
28 (290, 21)
CLIP
COLUMN HOLE COVER SILENCER SHEET
CLIP
INSTRUMENT PANEL SUB REINFORCEMENT
28 (290, 21)
STEERING SLIDING YOKE SUB-ASSEMBLY
N*m (kgf*cm, ft.*lbf) : Specified torque
N
C125682E01

SR

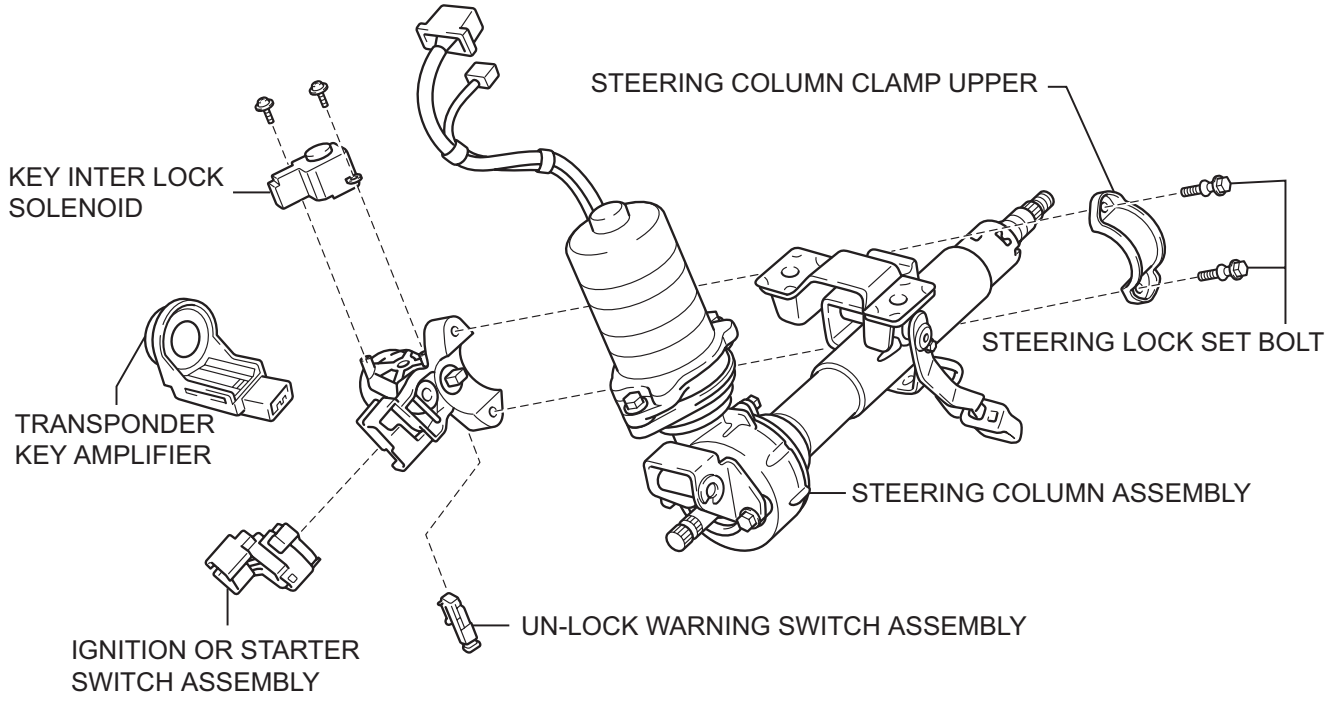

N

C117187E05

REMOVAL

CAUTION:
Some of these service operations affect the SRS airbag system. Read the precautionary notices concerning the SRS airbag system before servicing
RS-1

1. **POSITION FRONT WHEELS FACING STRAIGHT AHEAD**
2. **DISCONNECT CABLE FROM NEGATIVE BATTERY TERMINAL**
3. **REMOVE STEERING PAD (See page RS-309)**
4. **REMOVE STEERING WHEEL ASSEMBLY**
   (a) Remove the nut and place matchmarks on the steering wheel assembly and steering column assembly.

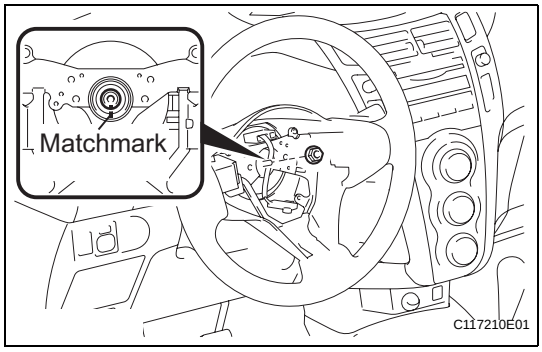

   (b) Using SST, remove the steering wheel assembly.
   SST 09950-50013 (09951-05010, 09952-05010, 09953-05020, 09954-05021)
   NOTICE:
   Apply a small amount of grease to the threads and tip of the SST center bolt before using.

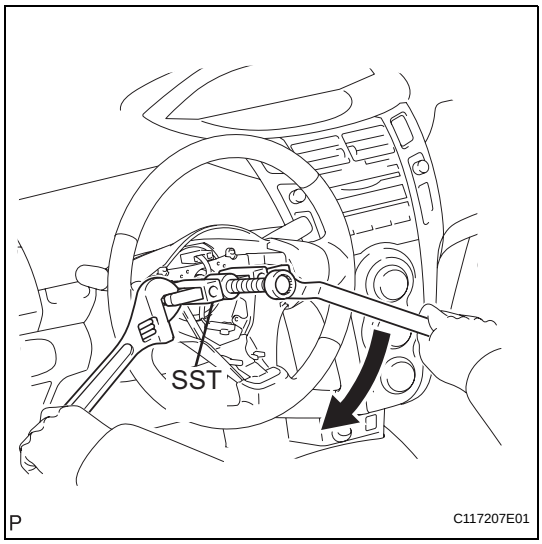

5. **REMOVE STEERING COLUMN COVER**
   (a) Remove the 3 screws, disengage the 2 claws, release the tilt lever and remove the steering column lower cover.

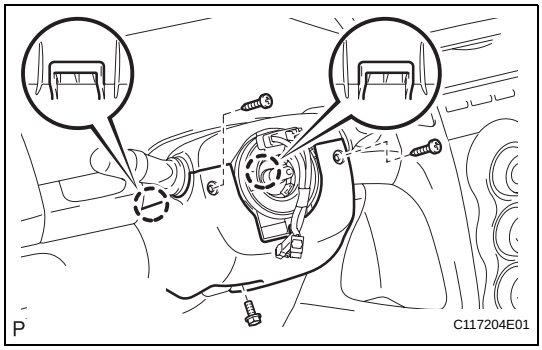

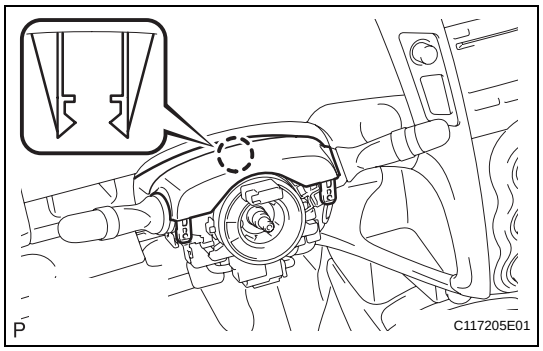

(b) Disengage the claw and remove the steering column upper cover.

6. REMOVE COMBINATION SWITCH ASSEMBLY

(a) Disconnect all connectors from the turn signal switch with spiral cable.

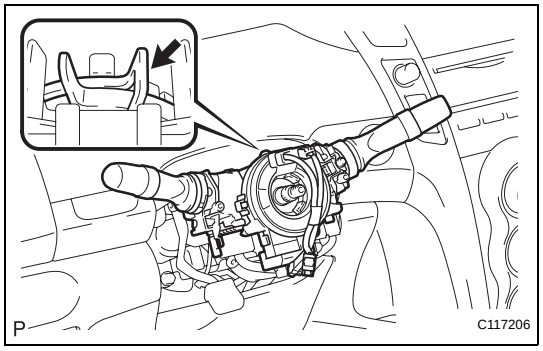

(b) Disengage the clamp indicated by the arrow in the illustration and remove the turn signal switch assembly with spiral cable from the steering column assembly.

7. REMOVE INSTRUMENT PANEL FINISH PANEL END LH (See page ME-145)

8. REMOVE INSTRUMENT PANEL FINISH PANEL END RH (See page ME-145)

9. REMOVE INSTRUMENT CLUSTER FINISH PANEL (See page ME-145)

10. REMOVE COMBINATION METER ASSEMBLY (See page ME-146)

11. REMOVE FRONT DOOR OPENING TRIM WEATHERSTRIP RH (See page IR-50)

12. REMOVE FRONT DOOR OPENING TRIM WEATHERSTRIP LH

HINT:
Use the same procedure for the RH side as for the LH side.

13. REMOVE FRONT PILLAR GARNISH RH (See page IR-58)

14. REMOVE FRONT PILLAR GARNISH LH (See page IR-59)

15. REMOVE GLOVE COMPARTMENT DOOR ASSEMBLY (See page IP-20)

16. REMOVE NO. 1 SWITCH HOLE BASE (See page IP-20)

17. REMOVE UPPER INSTRUMENT PANEL SUB-ASSEMBLY (See page IP-21)

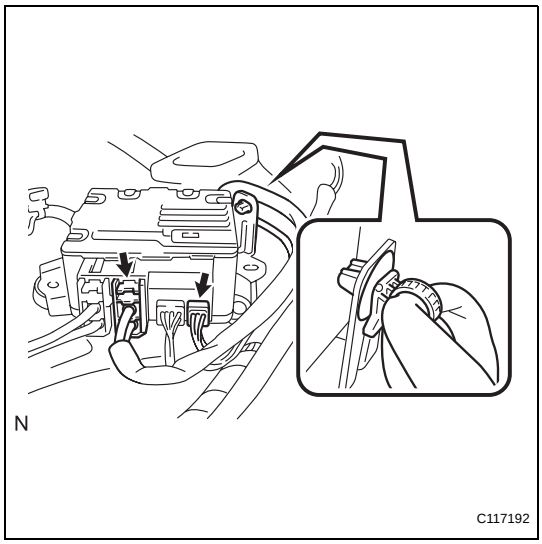

18. DISCONNECT POWER STEERING ECU

(a) Detach the power steering motor harness and torque sensor wire harness clamps from the power steering ECU side.

(b) Disconnect the 2 steering column assembly connectors from the power steering ECU.

19. REMOVE INSTRUMENT PANEL UNDER COVER SUB-ASSEMBLY LH (See page IR-50)

20. REMOVE LOWER INSTRUMENT PANEL FINISH PANEL SUB-ASSEMBLY (See page IP-69)

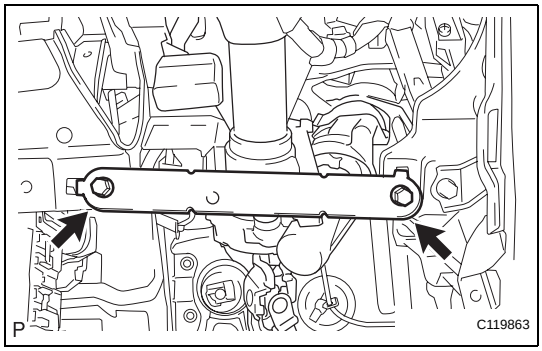

21. REMOVE INSTRUMENT PANEL SUB REINFORCEMENT

(a) Remove the 2 bolts and remove the reinforcement instrument panel sub.

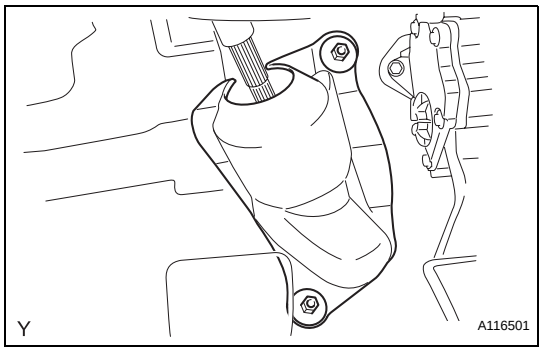

22. REMOVE COLUMN HOLE COVER SILENCER SHEET

(a) Pull back the floor carpet, remove the 2 clips and remove the column hole cover silencer sheet.

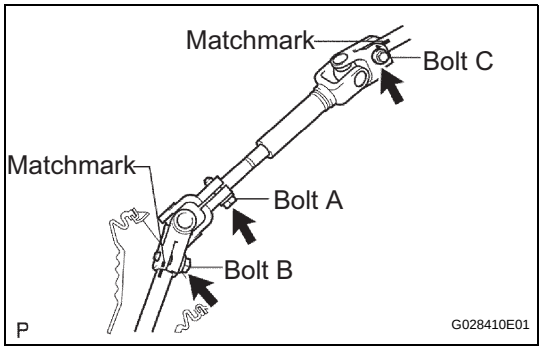

23. REMOVE NO. 2 STEERING INTERMEDIATE SHAFT ASSEMBLY

(a) Loosen bolt A.

(b) Place matchmarks on the steering intermediate assembly and steering gear assembly.

(c) Remove bolt B and detach the steering intermediate assembly from the steering gear assembly.

(d) Place matchmarks on the steering intermediate assembly and steering column assembly.

(e) Remove bolt C and detach the steering intermediate shaft assembly from the steering column assembly.

24. REMOVE BRAKE PEDAL (for Automatic Transaxle)

(a) Using needle-nose pliers, remove the brake pedal return spring.

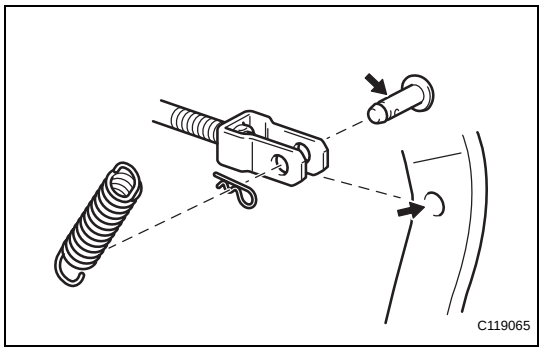

(b) Remove the clip from the brake master cylinder push rod clevis pin.
(c) Remove the brake master cylinder push rod clevis pin and detach the push rod clevis from the brake pedal
(d) Remove the bolt, nut and 2 brake pedal bushes, and remove the brake pedal assembly.

25. REMOVE BRAKE MASTER CYLINDER PUSH ROD CLEVIS (for Manual Transaxle) (See page BR-20)

26. REMOVE BRAKE PEDAL SUPPORT (for Manual Transaxle) (See page BR-21)

27. REMOVE STEERING COLUMN ASSEMBLY

(a) Disconnect all connectors and detach all wire harness clamps from the steering column assembly.

(b) Remove the 3 bolts and remove the steering column assembly from the instrument panel reinforcement assembly.

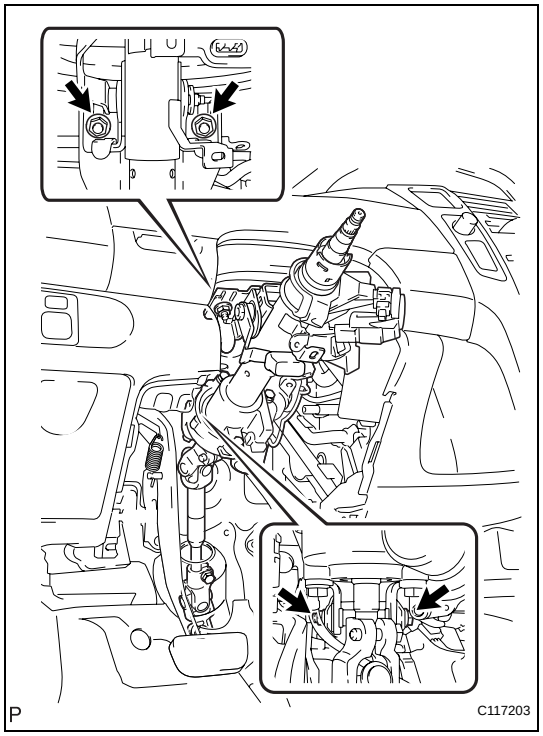

DISASSEMBLY

1. REMOVE STEERING SLIDING YOKE SUB-ASSEMBLY

(a) Place matchmarks on No. 2 steering intermediate shaft assembly and the steering sliding yoke.
(b) Remove bolt A and remove the steering sliding yoke from No. 2 steering intermediate shaft.

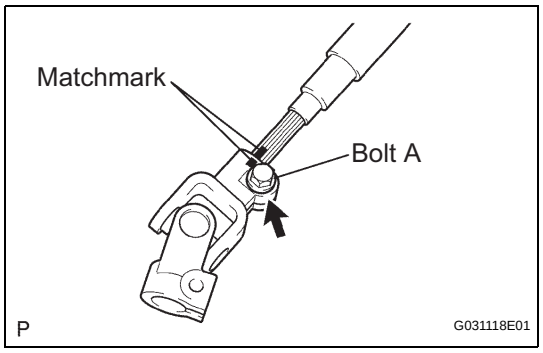

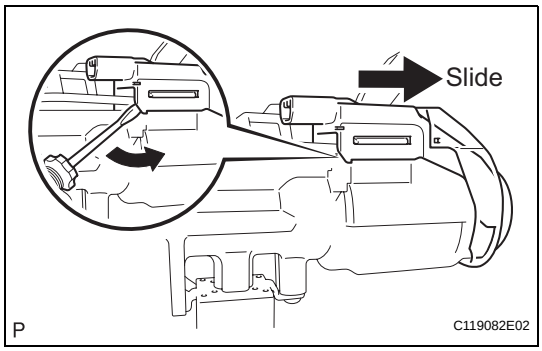

2. REMOVE TRANSPONDER KEY AMPLIFIER

(a) Disengage the 2 claws and slide the transponder key amplifier in the direction shown in the illustration, to detach it from the steering column upper with switch bracket assembly.

3. REMOVE STEERING COLUMN UPPER

(a) Fix the steering column assembly in a vise between aluminum plates.
NOTICE:
Do not overtighten the vise.

(b) Using a drill, drill a hole in each of the 2 steering lock set bolts, to insert a screw extractor.

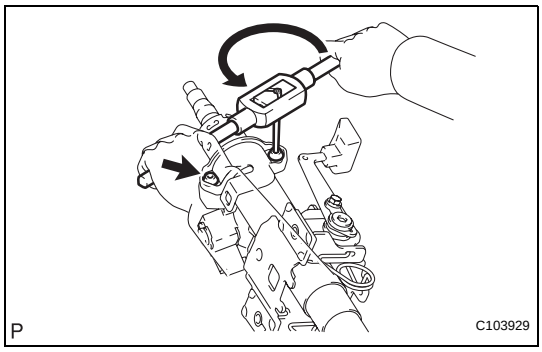

(c) Using the screw extractor, remove the 2 steering lock set bolts and remove the steering column upper w/ switch bracket assembly and steering column clamp upper.

4. REMOVE IGNITION SWITCH LOCK CYLINDER ASSEMBLY

(a) Turn the ignition switch to ACC.

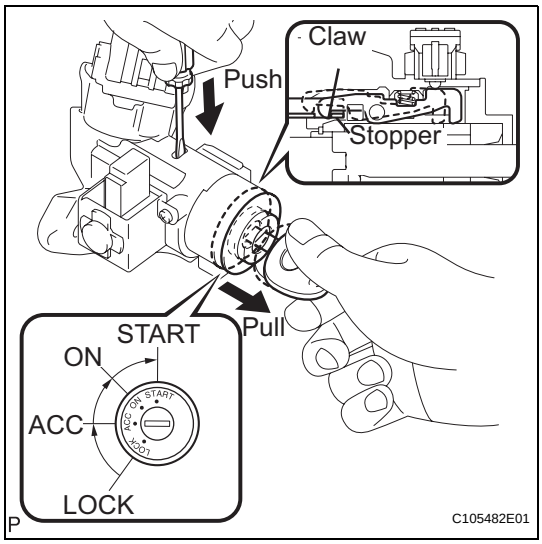

(b) Insert the tip of a screwdriver into the hole in the steering column bracket assembly upper, as shown in the illustration, and pull the ignition switch lock cylinder assembly out until its claw comes into contact with the stopper of the steering column bracket assembly upper.
NOTICE:
Pull the ignition switch lock cylinder assembly out until its claw comes into contact with the stopper of the steering column bracket assembly upper. Otherwise, the following procedure cannot be conducted properly.

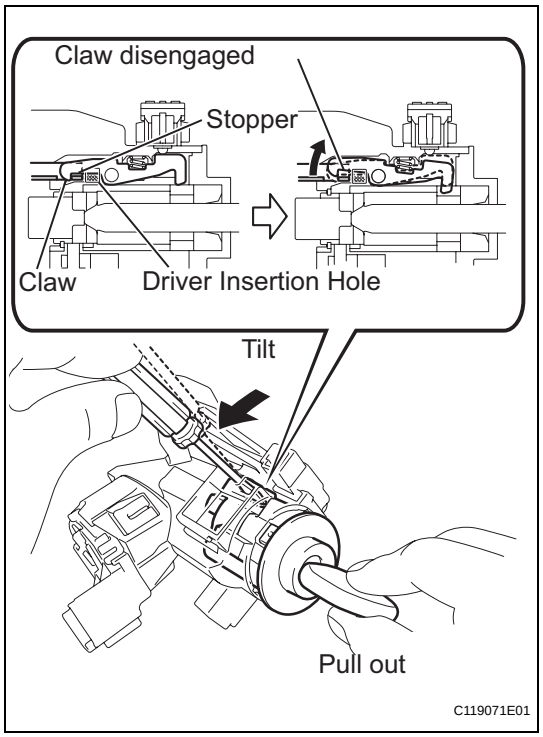

(c) Insert the tip of a screwdriver into the hole in the steering column bracket and tilt it downward, as shown in the illustration, to disengage the claw of the ignition switch lock cylinder. Then pull out the ignition switch lock cylinder.

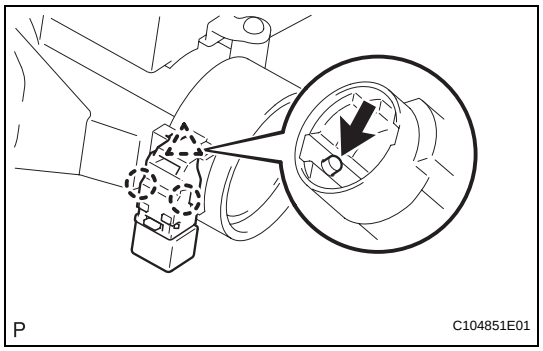

5. REMOVE UN-LOCK WARNING SWITCH ASSEMBLY

(a) Push up the un-lock warning switch assembly center portion to disengage the 2 claws.
HINT:
Slide the un-lock warning switch assembly, in the direction shown by the arrow in the illustration, to remove it.

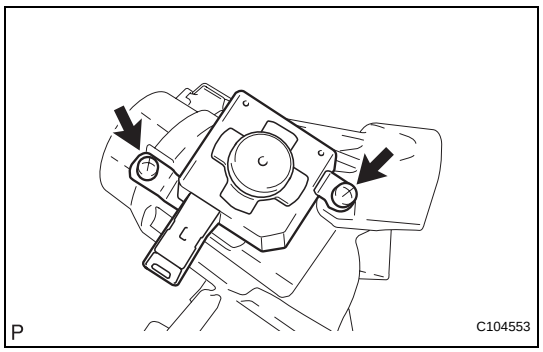

6. REMOVE KEY INTER LOCK SOLENOID (for Automatic Transaxle)

(a) Remove the 2 screws and remove the key lock solenoid from the steering column bracket assembly upper.

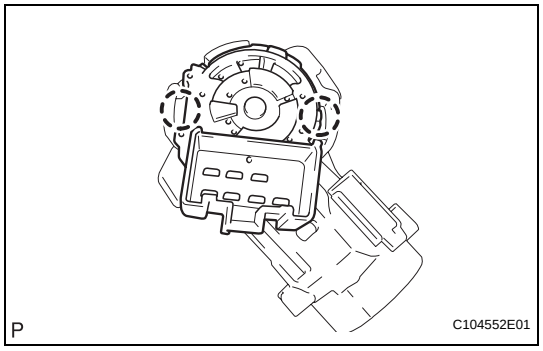

7. REMOVE IGNITION OR STARTER SWITCH ASSEMBLY

(a) Disengage the 2 claws and remove the ignition (starter) switch assembly from the steering column bracket assembly upper.

REASSEMBLY

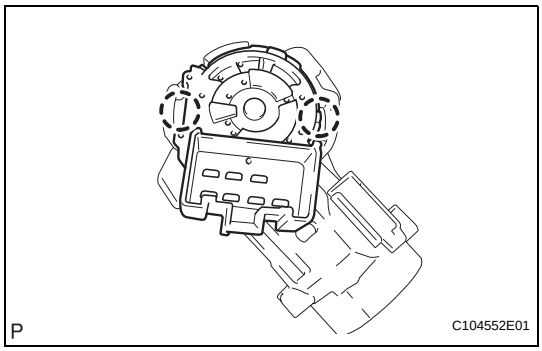

1. INSTALL IGNITION OR STARTER SWITCH ASSEMBLY

(a) Engage the 2 claws to install the ignition (starter) switch assembly onto the steering column bracket assembly upper.

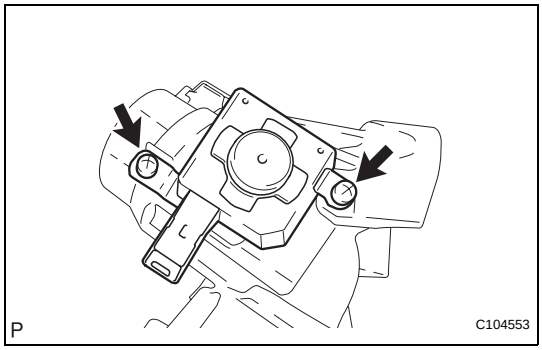

2. INSTALL KEY INTER LOCK SOLENOID (for Automatic Transaxle)

(a) Install the key inter lock solenoid onto the steering column bracket assembly upper with the 2 screws.

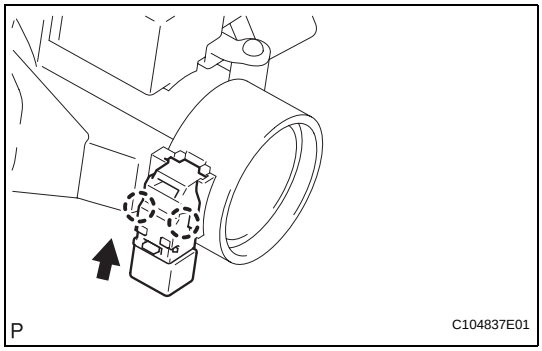

3. INSTALL UN-LOCK WARNING SWITCH ASSEMBLY

(a) Engage the 2 claws to install the un-lock warning switch assembly onto the steering column bracket assembly upper.
HINT:
Slide the un-lock warning switch assembly, in the direction shown by the arrow in the illustration, to install it.

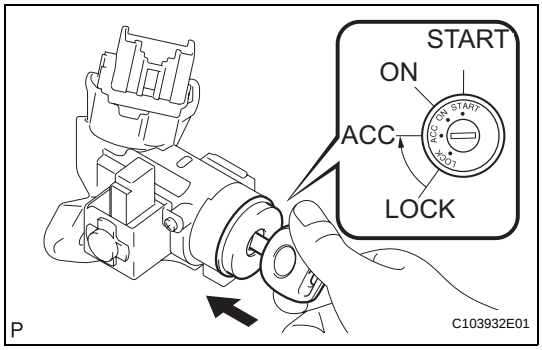

4. INSTALL IGNITION SWITCH LOCK CYLINDER ASSEMBLY

(a) Turn the ignition switch to ACC.

(b) Install the ignition switch lock cylinder assembly into the steering column bracket assembly upper.

(c) Make sure that the ignition switch lock cylinder assembly is securely fixed onto the ignition switch lock cylinder assembly.

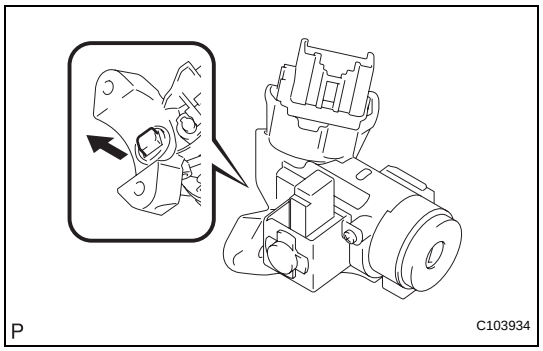

5. INSPECT STEERING LOCK OPERATION

(a) Remove the key and check that the steering lock function is activated.

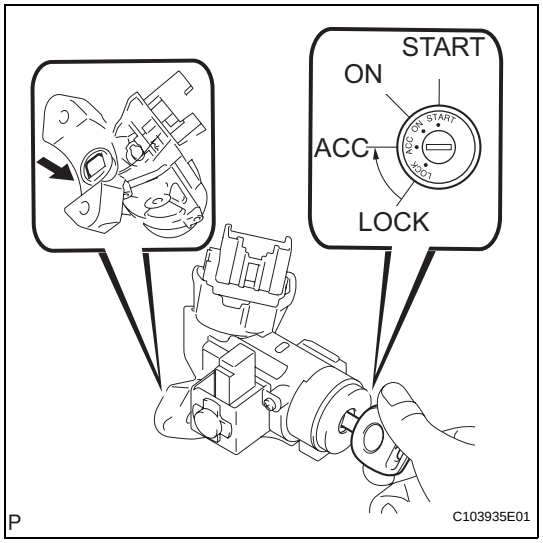

(b) Insert the key, turn the ignition switch to ACC and check that the steering lock function is inactivated.

6. INSTALL STEERING COLUMN UPPER W/SWITCH BRACKET ASSEMBLY

(a) Fix the steering column assembly in a vise between aluminum plates.
NOTICE:
Do not overtighten the vise.

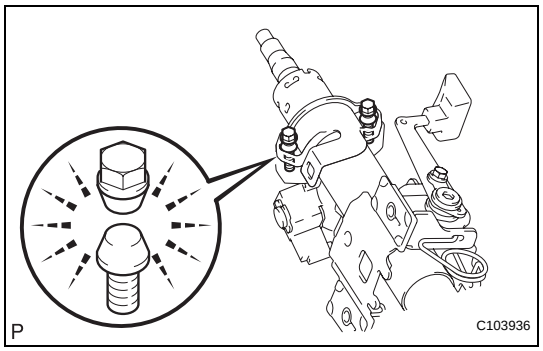

(b) Install the steering column upper with switch bracket assembly and steering column clamp upper with 2 new steering lock set bolts, and then tighten the bolts until their heads come off.

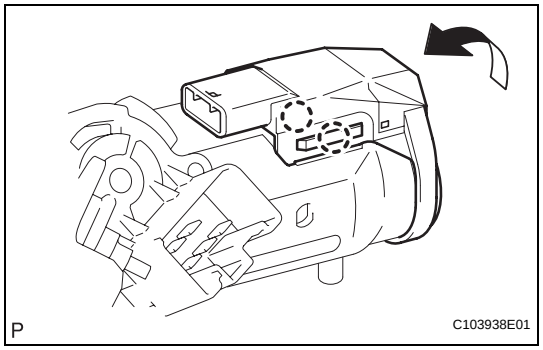

7. INSTALL TRANSPONDER KEY AMPLIFIER

(a) Engage the 2 claws and install the transponder key amplifier onto the steering column upper with the switch bracket.

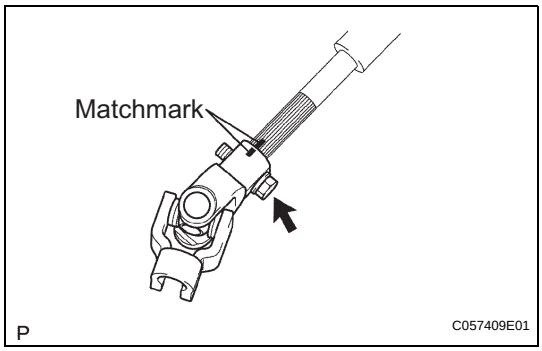

8. INSTALL STEERING SLIDING YOKE SUB-ASSEMBLY

(a) Align the matchmarks on steering intermediate shaft assembly No. 2 and the steering sliding yoke and provisionally install them with the bolt.

INSTALLATION

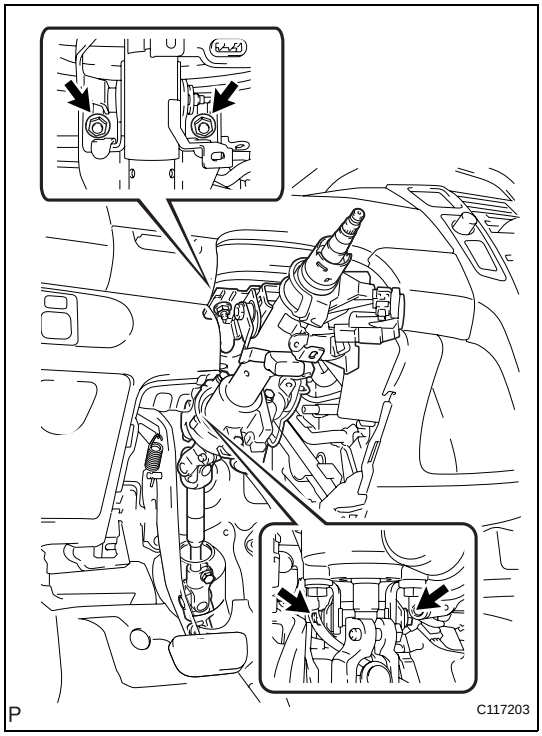

1. INSTALL STEERING COLUMN ASSEMBLY

(a) Install the steering column assembly onto the instrument panel reinforcement assembly with the 3 bolts.
Torque: 25 N*m (255 kgf*cm, 18 ft.*lbf)

(b) Connect all the connectors and clamp the wire harnesses onto the steering column assembly bracket.

2. INSTALL BRAKE PEDAL (for Automatic Transaxle)

(a) Apply MP grease No. 2 to the brake pedal bush and its installation surfaces.

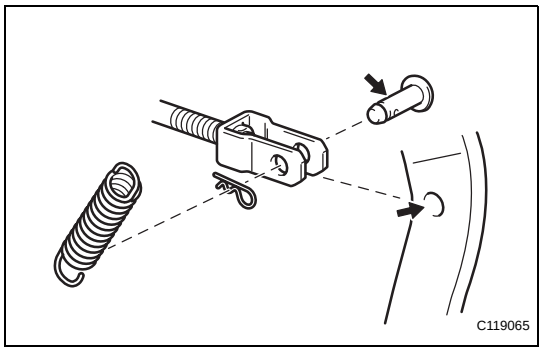

(b) Install the 2 brake pedal bushes, and install the brake pedal with the nut and brake pedal shaft.
Torque: 37 N*m (375 kgf*cm, 27 ft.*lbf)

(c) Apply lithium soap base glycol grease to the brake master cylinder push rod clevis pin and its installation point.

(d) Connect the brake master cylinder push rod clevis to the brake pedal with the brake master cylinder push rod clevis pin, install the clip onto the brake master cylinder push rod clevis pin, and then install the brake pedal return spring.

(e) Connect all the connectors and clamp the wire harnesses onto the steering column assembly bracket.

3. INSTALL BRAKE PEDAL SUPPORT (for Manual Transaxle) (See page BR-21)

4. INSTALL BRAKE MASTER CYLINDER PUSH ROD CLEVIS (for Manual Transaxle) (See page BR-21)

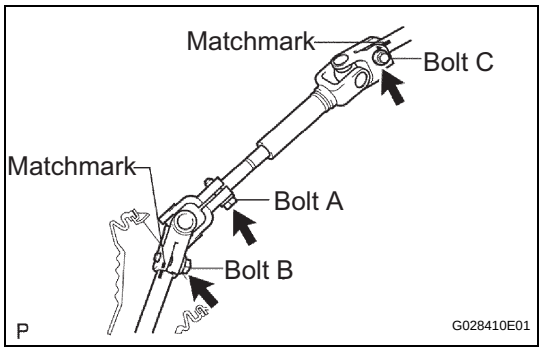

5. INSTALL NO. 2 STEERING INTERMEDIATE SHAFT ASSEMBLY

(a) Align the matchmarks on steering intermediate shaft assembly No. 2 and the steering sliding yoke and provisionally install them with bolt C.
Torque: 28 N*m (290 kgf*cm, 21 ft.*lbf)

(b) Align the matchmarks on the steering sliding yoke and steering gear assembly and install them with bolt B.
Torque: 28 N*m (290 kgf*cm, 21 ft.*lbf)

(c) Tighten bolt A.
Torque: 28 N*m (290 kgf*cm, 21 ft.*lbf)

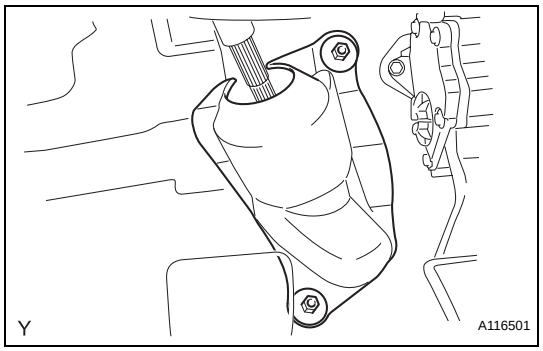

6. INSTALL COLUMN HOLE COVER SILENCER SHEET

(a) Install the column hole cover plate with the 2 clips.

(b) Install the floor carpet.

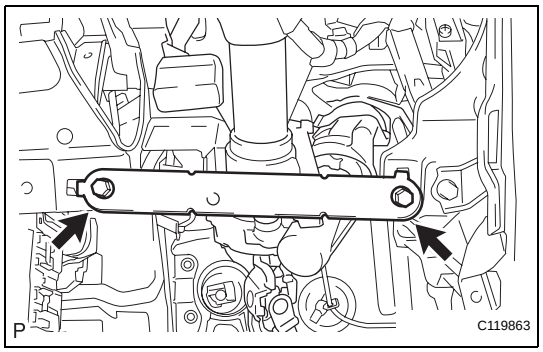

7. INSTALL INSTRUMENT PANEL SUB REINFORCEMENT

(a) Align the 2 claws and install the reinforcement instrument panel sub with the 2 bolts.

8. INSTALL LOWER INSTRUMENT PANEL FINISH PANEL SUB-ASSEMBLY (See page IP-78)

9. INSTALL INSTRUMENT PANEL UNDER COVER SUB-ASSEMBLY LH (See page IR-82)

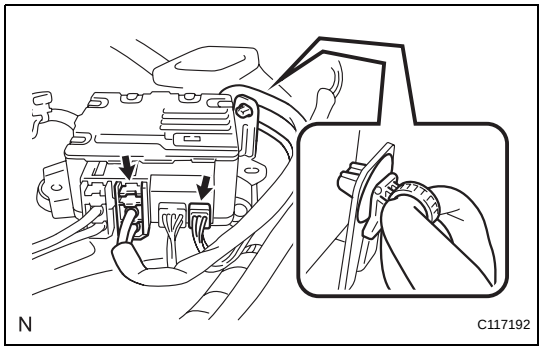

10. CONNECT POWER STEERING ECU

(a) Connect the 2 steering column assembly connectors to the power steering ECU.

(b) Install the power steering motor harness and torque sensor wire harness clamps onto the side of the power steering ECU.

(c) Tilt the steering column assembly up and down to make sure that the power steering motor harness and torque sensor wire harness do not interfere with any components.

11. INSTALL UPPER INSTRUMENT PANEL SUB-ASSEMBLY (See page IP-29)

12. INSTALL GLOVE COMPARTMENT DOOR ASSEMBLY (See page IP-32)

13. INSTALL NO. 1 SWITCH HOLE BASE (See page IP-32)

14. INSTALL FRONT PILLAR GARNISH RH (See page IR-71)

15. INSTALL FRONT PILLAR GARNISH LH (See page IR-72)

16. INSTALL FRONT DOOR OPENING TRIM WEATHERSTRIP RH (See page IR-81)

17. INSTALL FRONT DOOR OPENING TRIM WEATHERSTRIP LH

HINT:
Use the same procedure for the RH side as for the LH side.

18. INSTALL COMBINATION METER ASSEMBLY (See page ME-148)

19. INSTALL INSTRUMENT CLUSTER FINISH PANEL (See page ME-148)

20. INSTALL INSTRUMENT PANEL FINISH PANEL END RH (See page ME-149)

21. INSTALL INSTRUMENT PANEL FINISH PANEL END LH (See page ME-149)

22. INSTALL COMBINATION SWITCH ASSEMBLY

(a) Install the turn signal switch assembly with spiral cable onto the steering column assembly with the clamp

(b) Connect all the connectors to the turn signal switch with spiral cable.

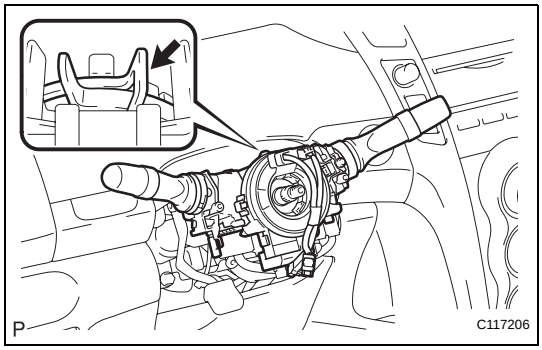

23. INSTALL STEERING COLUMN COVER

(a) Engage the claw to install the steering column upper cover.

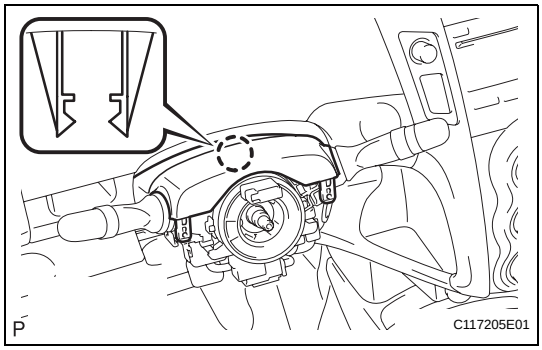

(b) Engage the 2 claws to install the steering column lower cover.

(c) Install the 3 screws.

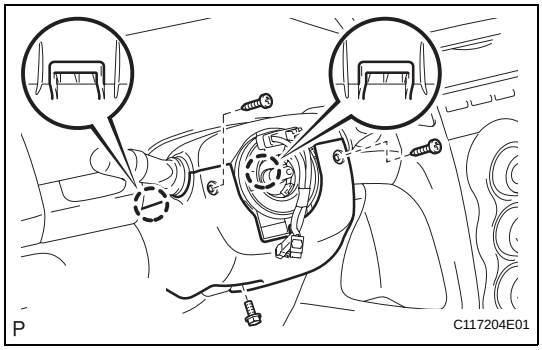

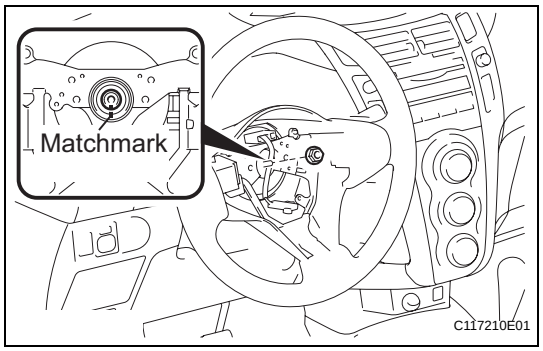

24. INSTALL STEERING WHEEL ASSEMBLY

(a) Align the matchmarks and install the steering wheel assembly onto the steering column assembly.

(b) Install the nut.
Torque: 50 N*m (510 kgf*cm, 37 ft.*lbf)

(c) Connect all the connectors to the spiral cable.

25. INSTALL STEERING PAD (See page RS-310)

26. POSITION FRONT WHEELS FACING STRAIGHT AHEAD

27. CONNECT CABLE TO NEGATIVE BATTERY TERMINAL
Torque: 5.4 N*m (55 kgf*cm, 48 in.*lbf)

28. INSPECT SRS WARNING LIGHT TURNS OFF
(See page RS-31)

29. PERFORM CALIBRATION OF TORQUE SENSOR ZERO POINT
(See page PS-12)