SECTION BT

CONTENTS

PRECAUTIONS 2
Service Notice....2
Supplemental Restraint System (SRS) "AIR BAG"....2
Maintenance 2
CLIP AND FASTENER....3
Description....3
BODY FRONT END....6
Removal and Installation 6
FRONT BUMPER ASSEMBLY 6
BODY REAR END AND OPENER....10
Removal and Installation 10
REAR BUMPER ASSEMBLY 10
DOOR....13
Adjustment....13
STRIKER ADJUSTMENT....13
Door Glass....14
DOOR GLASS AND REGULATOR....14
Door Glass Fitting Adjustment....16
IN-OUT ADJUSTMENT (AT THE GLASS WAIST)....17
FORE-AFT TILT ADJUSTMENT 17
IN-OUT TILT ADJUSTMENT (AT GLASS UPPER STOP)....17
UP-STOP ADJUSTMENT....18
FORE-AFT ADJUSTMENT....18
Door Limit Switch Reset (Driver side only) 19
RESET CONDITIONS 19
RESET PROCEDURES....19
Door Lock 20
BELL CRANK ADJUSTMENT....20
OUTSIDE HANDLE ROD ADJUSTMENT 20
REMOVAL....21
INSTRUMENT PANEL ASSEMBLY 22
Removal and Installation 22
SIDE AND FLOOR TRIM....26
Removal and Installation 26
DOOR TRIM....29
Removal and Installation 29
ROOF TRIM 31
Removal and Installation 31
TRUNK ROOM TRIM....33
Removal and Installation 33
EXTERIOR 34
Removal and Installation 34
FRONT SEAT 38
Removal and Installation 38
REAR SEAT....39
Removal and Installation 39
SUNROOF....40
Adjustment....40
Removal....40
Trouble Diagnoses....44
DIAGNOSTIC TABLE....44
WIND DEFLECTOR 44
ADJUSTMENT....45
DRAIN HOSES 46
WEATHERSTRIP 47
LINK AND WIRE ASSEMBLY....47
WINDSHIELD AND WINDOWS 48
Removal and Installation 48
REMOVAL....48
INSTALLATION....48
WINDSHIELD AND WINDOWS 49
DOOR MIRROR....52
Removal and Installation 52
BODY (ALIGNMENT) 53
Alignment....53
ENGINE COMPARTMENT....54
UNDERBODY....56

Service Notice

NMBT0001

- When removing or installing various parts, place a cloth or padding onto the vehicle body to prevent scratches.
- Handle trim, molding, instruments, grille, etc. carefully during removing or installing. Be careful not to soil or damage them.
- Apply sealing compound where necessary when installing parts.
- When applying sealing compound, be careful that the sealing compound does not protrude from parts.
- When replacing any metal parts (for example body outer panel, members, etc.), be sure to take rust prevention measures.

Supplemental Restraint System (SRS) “AIR BAG”

NMBT0002

The Supplemental Restraint System such as “AIR BAG” and “SEAT BELT PRE-TENSIONER” used along with a seat belt, helps to reduce the risk or severity of injury to the driver and front passenger for certain types of collision. The SRS system composition which is available to NISSAN MODEL S15 is as follows:
The Supplemental Restraint System consists of driver air bag module (located in the center of the steering wheel), front passenger air bag module (located on the instrument panel on passenger side), a diagnosis sensor unit, warning lamp, wiring harness and spiral cable.
Information necessary to service the system safely is included in the **RS section** of this Service Manual.

WARNING:

- **To avoid rendering the SRS inoperative, which could increase the risk of personal injury or death in the event of a collision which would result in air bag inflation, all maintenance should be performed by an authorized NISSAN dealer.**
- **Improper maintenance, including incorrect removal and installation of the SRS, can lead to personal injury caused by unintentional activation of the system. For removal of Spiral Cable and Air Bag Module, see the RS section.**
- **Do not use electrical test equipment on any circuit related to the SRS unless instructed to in this Service Manual. SRS wiring harnesses can be identified with yellow harness connector.**

Maintenance

NMBT0035

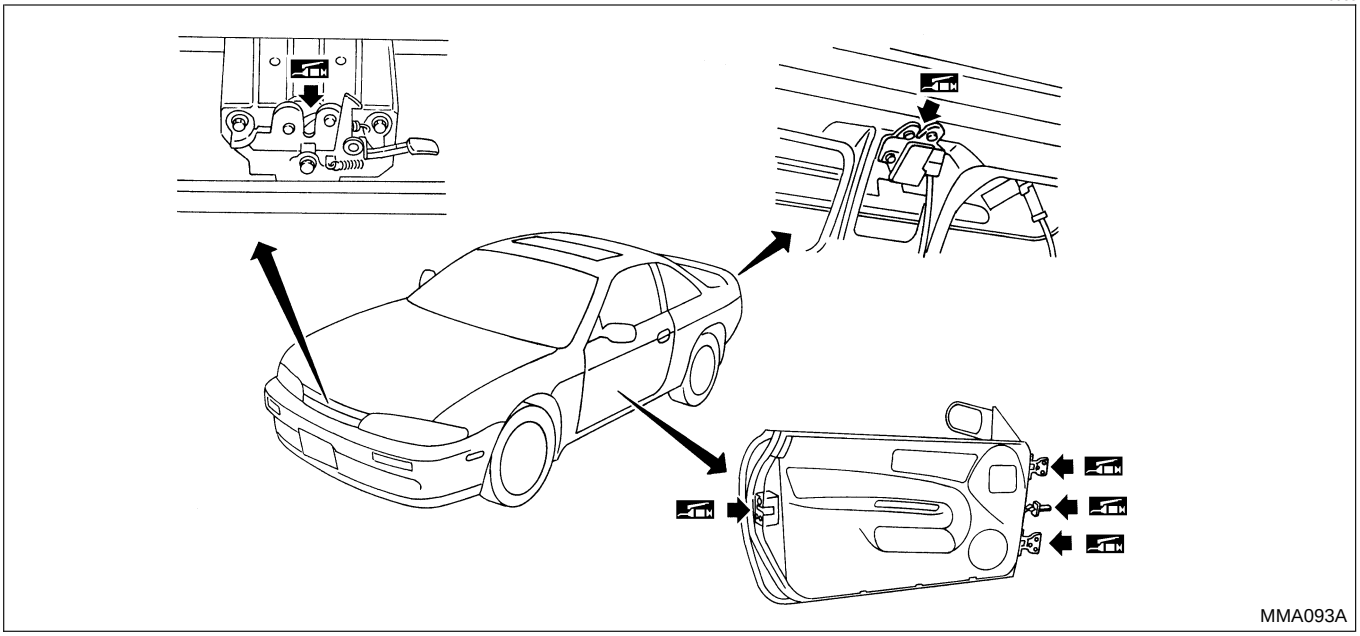

Description

NMBT0003

- Clips and fasteners in BT section correspond to the following numbers and symbols.
- Replace any clips and/or fasteners which are damaged during removal or installation.

Symbol No.	Shapes	Removal & Installation
C101	SBF302H	**Removal:** Remove by bending up with flat-bladed screwdrivers or clip remover. SBF367BA
C103	SBT095	**Removal:** Remove with a clip remover. SBF423H
C203	SBF258G	Push center pin to catching position. (Do not remove center pin by hitting it.) Push Push **Installation:** SBF708E
C205	MBT080A	**Removal:** Flat-bladed screwdriver Clip Finisher SBF638CA
C206	MBF519B	MBF520B

Description (Cont'd)

Symbol No.	Shapes	Removal & Installation
CE103	SBF104B	**Removal:** SBF147B
CF110	Clip-A, Seal rubber, Clip-B SBF648B	**Removal:** Clip-A, Finisher, Weatherstrip, Clip-B, Rubber seal, Flat-bladed screwdriver SBF649B
CF118	Clip-A, Clip-B (Grommet), Sealing washer SBF151D	**Removal:** Flat-bladed screwdriver, Finisher, Clip-B (Grommet), Body panel, Clip-A, Sealing washers SBF259G
CR103	SBF768B	**Removal:** Holder portion of clip must be spread out to remove rod. SBF770B
CS101	SBF078B	**Removal:** 1. Screw out with a Phillips screwdriver. 2. Remove female portion with flat-bladed screwdriver. SBF992G

Symbol No.	Shapes	Removal & Installation
CS102	SBT117A	SBT118A

Removal and Installation

NMBT0004

- When removing or installing hood, place a cloth or other padding on hood. This prevents vehicle body from being scratched.
- Bumper fascia is made of plastic. Do not use excessive force and be sure to keep oil away from it.
- Hood adjustment: Adjust at hinge portion.
- Hood lock adjustment: After adjusting, check hood lock control operation. Apply a coat of grease to hood locks engaging mechanism.
- Hood opener: Do not attempt to bend cable forcibly. Doing so increases effort required to unlock hood.

FRONT BUMPER ASSEMBLY

NMBT0004S01

1. Remove clips and screws securing left and right sides of fender protectors.
2. Remove bolts securing left and right front fenders to bumper fascia.
3. Remove bolts securing engine undercover to bumper fascia.
4. Remove clips securing bumper facia.
5. Extract bumper fascia assembly.
6. Remove bolts securing bumper grille. Then remove bumper grille.
7. Remove bolts and nuts securing bumper reinforcement to left and right bumper stays.
8. Extract bumper reinforcement.
9. Remove bolts and screws securing bumper upper retainer, then remove bumper upper retainer.

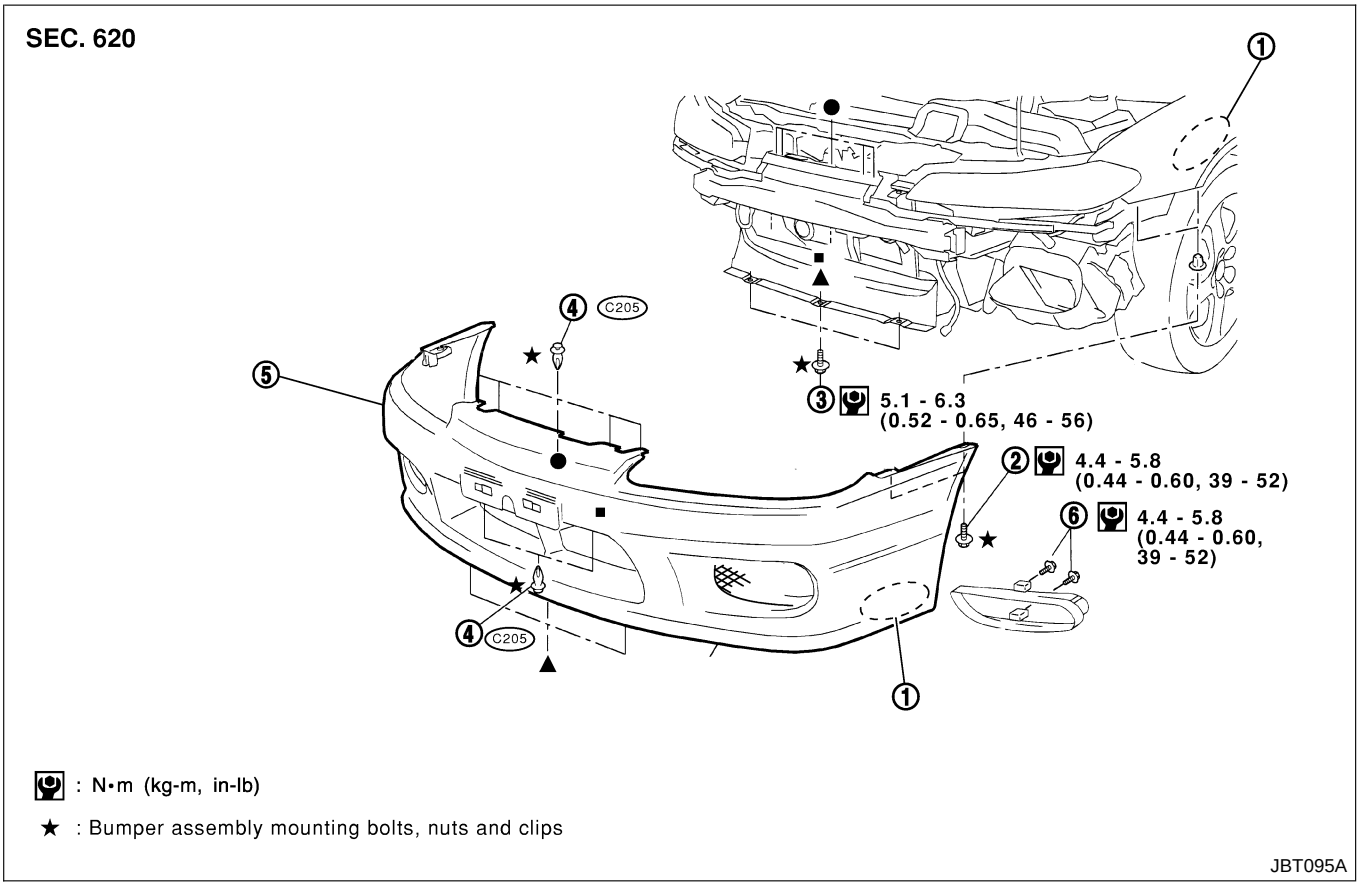

SEC. 620

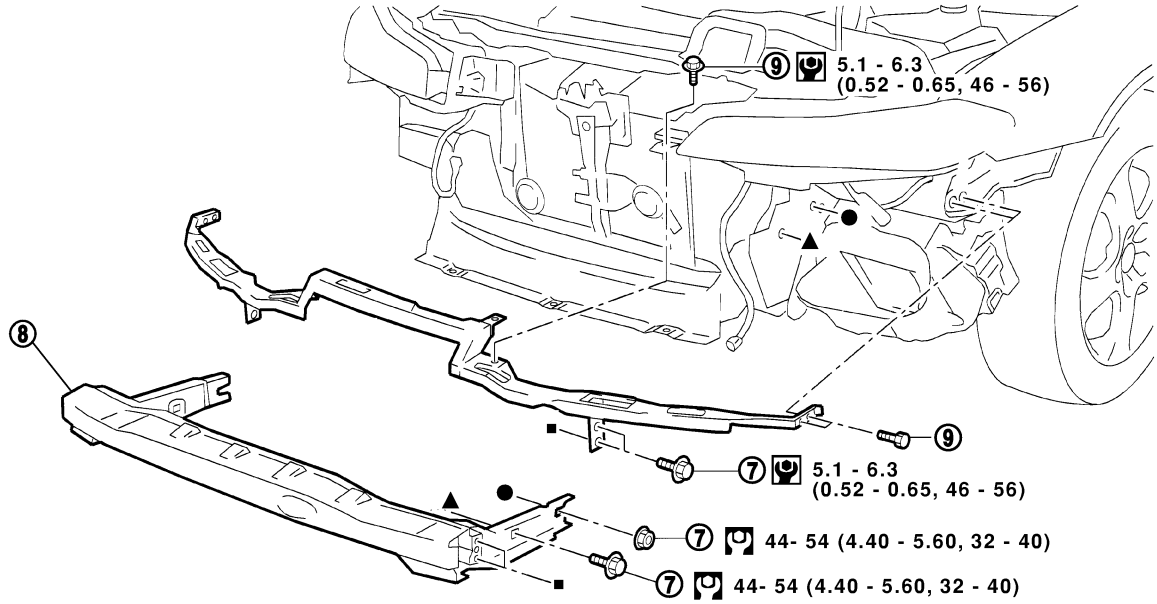

: N•m (kg-m, ft-lb)

: N•m (kg-m, in-lb)

JBT096A

SEC. 630

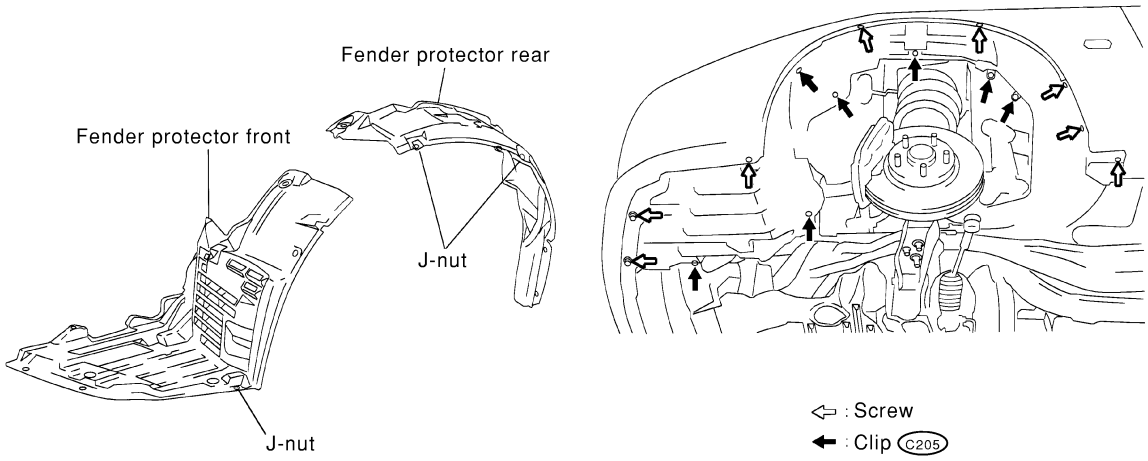

JBT097A

SEC. 650

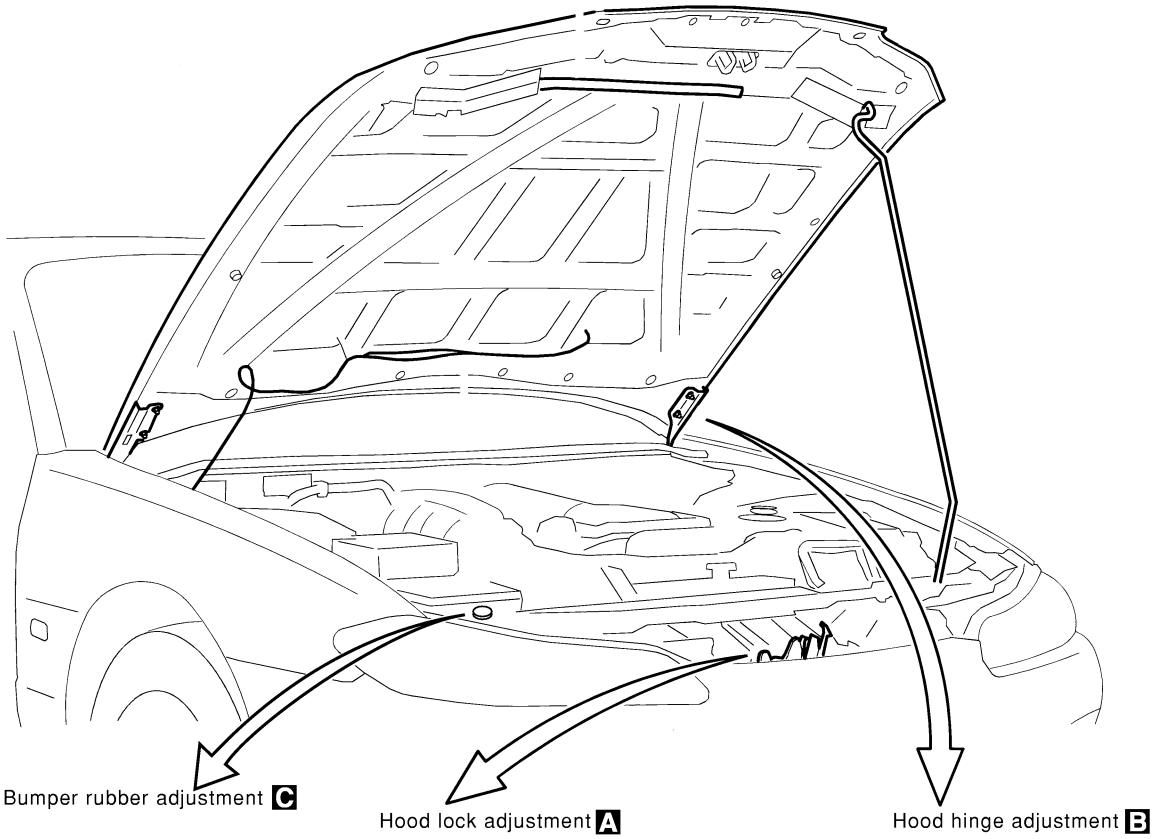

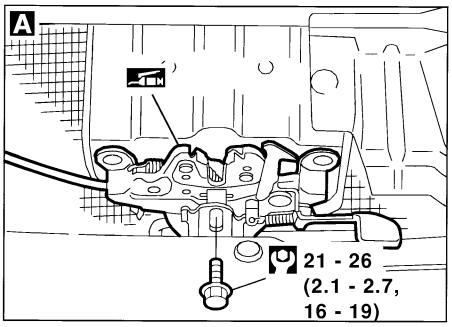

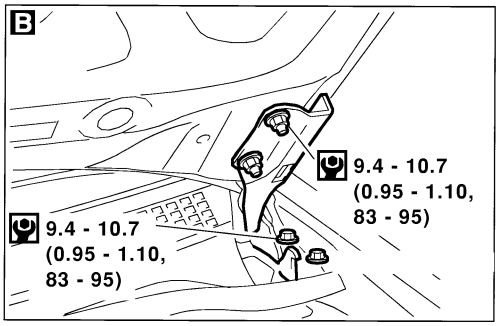

C Bumper rubber adjustment

- Remove hood lock. Rotate bumper rubber so that hood is 1 to 1.5 mm (0.039 to 0.059 in) lower than fender.
- Temporarily tighten hood lock. After marking sure that There is no striker free play, tighten hood lock securing bolts to specified torque.
- Adjust bumper rubber so that hood is flush with fender, or the surface difference between the two is 0 mm (0 in).

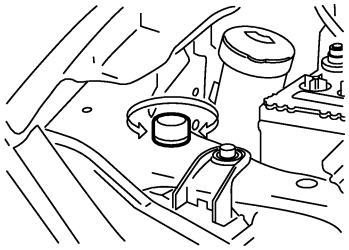

: Body grease

: N•m (kg-m, in-lb)

: N•m (kg-m, ft-lb)

JBT100A

Hood clearance adjustment

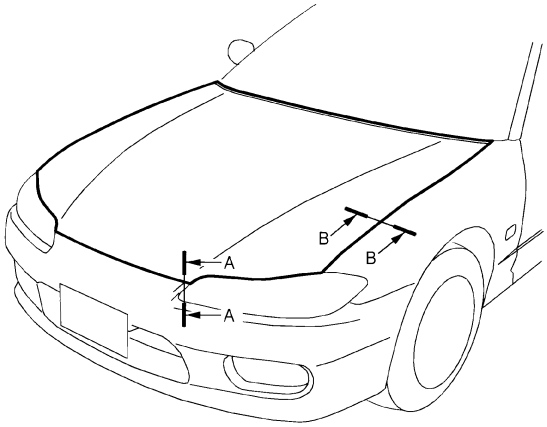

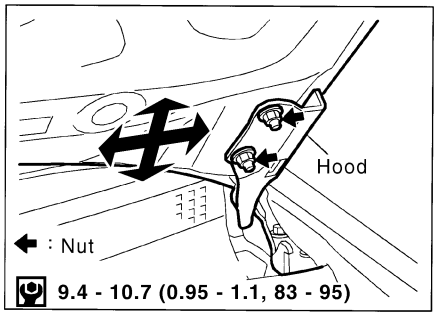

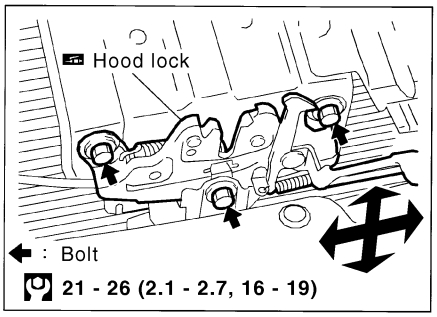

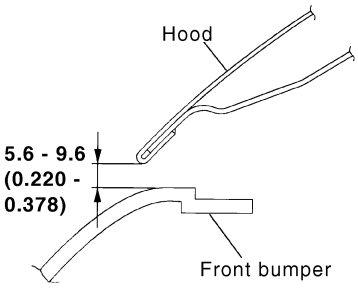

A – A

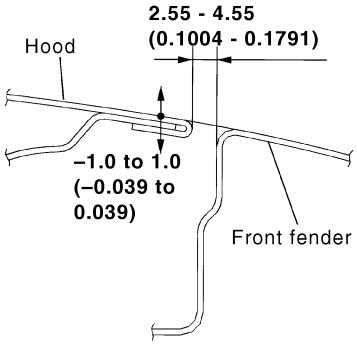

B – B

Unit: mm (in)

: N•m (kg-m, in-lb)

: N•m (kg-m, ft-lb)

JBT119A

Removal and Installation

NMBT0005

- When removing or installing trunk lid, place a cloth or other padding on trunk lid. This prevents vehicle body from being scratched.
- Bumper fascia is made of plastic. Do not use excessive force and be sure to keep oil away from it.
- Trunk lid adjustment: Adjust at hinge-trunk lid portion for proper trunk lid fit.
- Trunk lid lock system adjustment: Adjust striker so that it is in the center of the lock. After adjustment, check trunk lid lock operation.
- After installation, make sure that trunk lid and fuel filler lid open smoothly.

REAR BUMPER ASSEMBLY

NMBT0005S01

1. Remove left and right rear wheel house finishers. Refer to “TRUNK ROOM TRIM”, BT-33.
2. Remove licence plate lamp. Then disconnect harness connectors.
3. Remove clips securing left and right chipping protectors.
4. Remove screws securing left and right rear fenders to bumper fascia.
5. Remove bolts and nuts securing left and right bumper fascia assemblies.
6. Remove clips securing bumper fascia assembly.
7. Extract bumper fascia assembly.
8. Remove screws securing licence plate lamp bracket, then remove the licence plate lamp bracket.
9. Remove clips securing left and right bumper side brackets, then remove the bumper side brackets.

SEC. 843•850

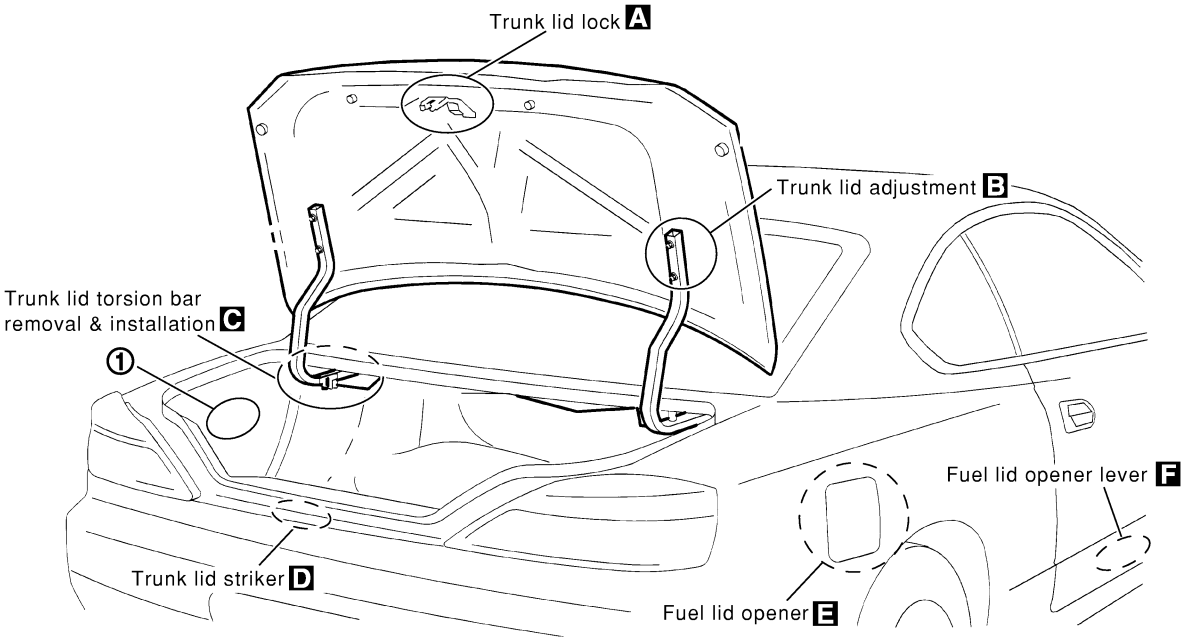

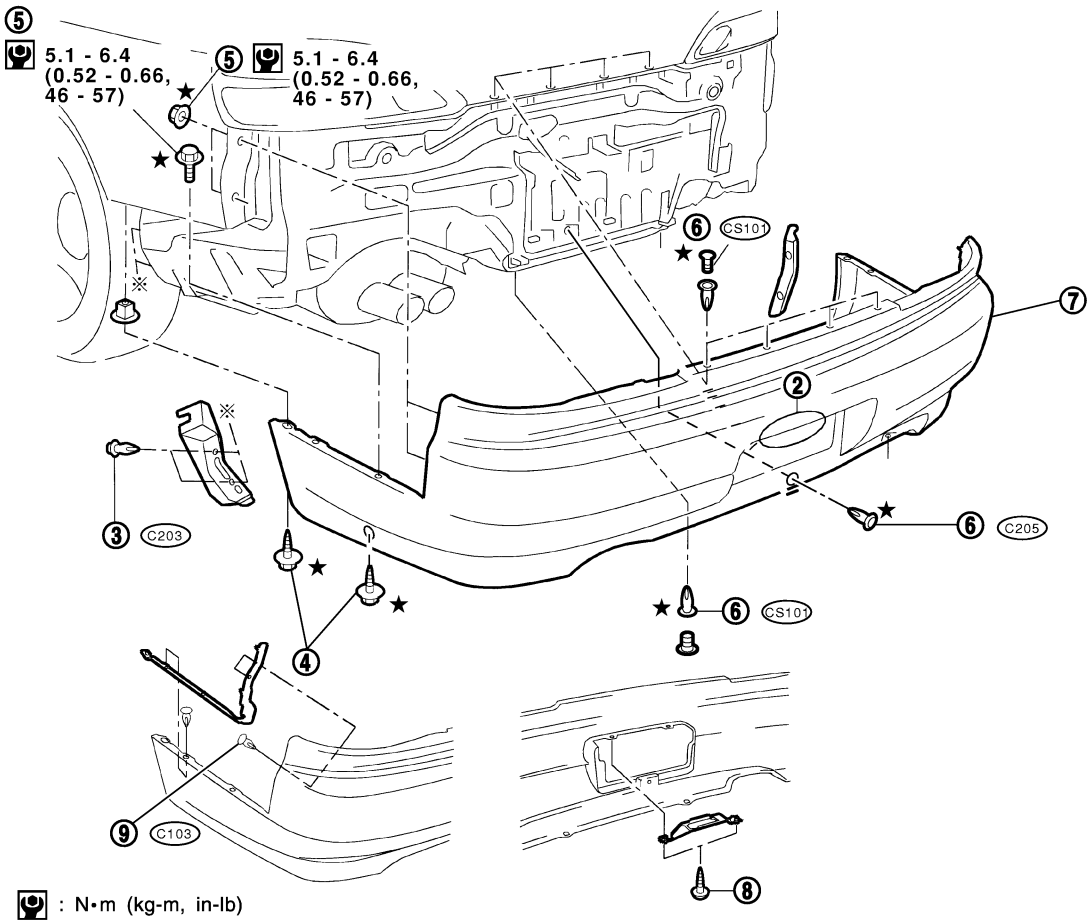

: N•m (kg-m, in-lb)

★ : Bumper assembly mounting bolts, screws, nuts and clips

JBT098A

②

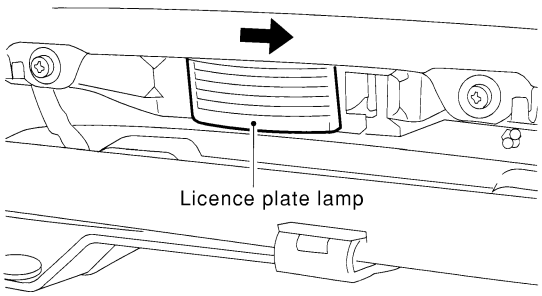

A

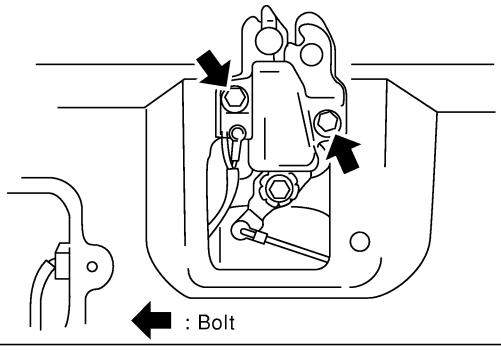

B

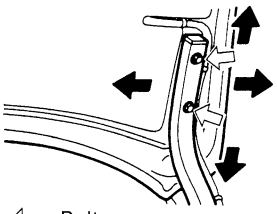

⇦ : Bolt

4.9 - 6.4 (0.5 - 0.66, 44 - 57)

C

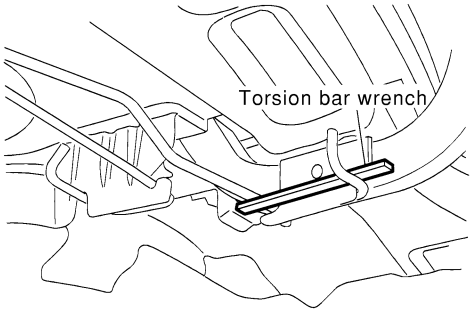

D

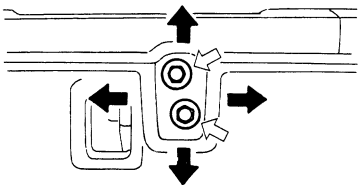

⇦ : Bolt

12 - 15 (1.15 - 1.6, 9 - 10)

E

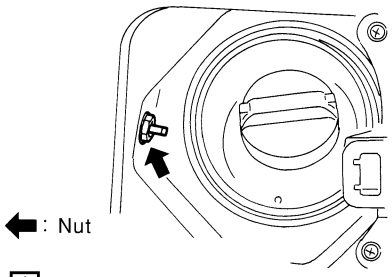

1.0 - 1.4 (0.1 - 0.15, 9 - 13)

F

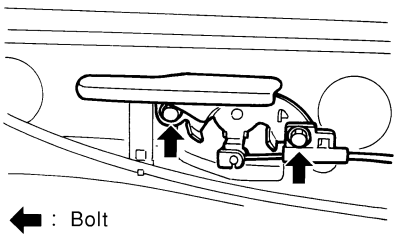

: Bolt

5.0 - 6.4 (0.51 - 0.66, 45 - 57)

: N•m (kg-m, in-lb)

: N•m (kg-m, ft-lb)

JBT099A

Adjustment

NMBT0006

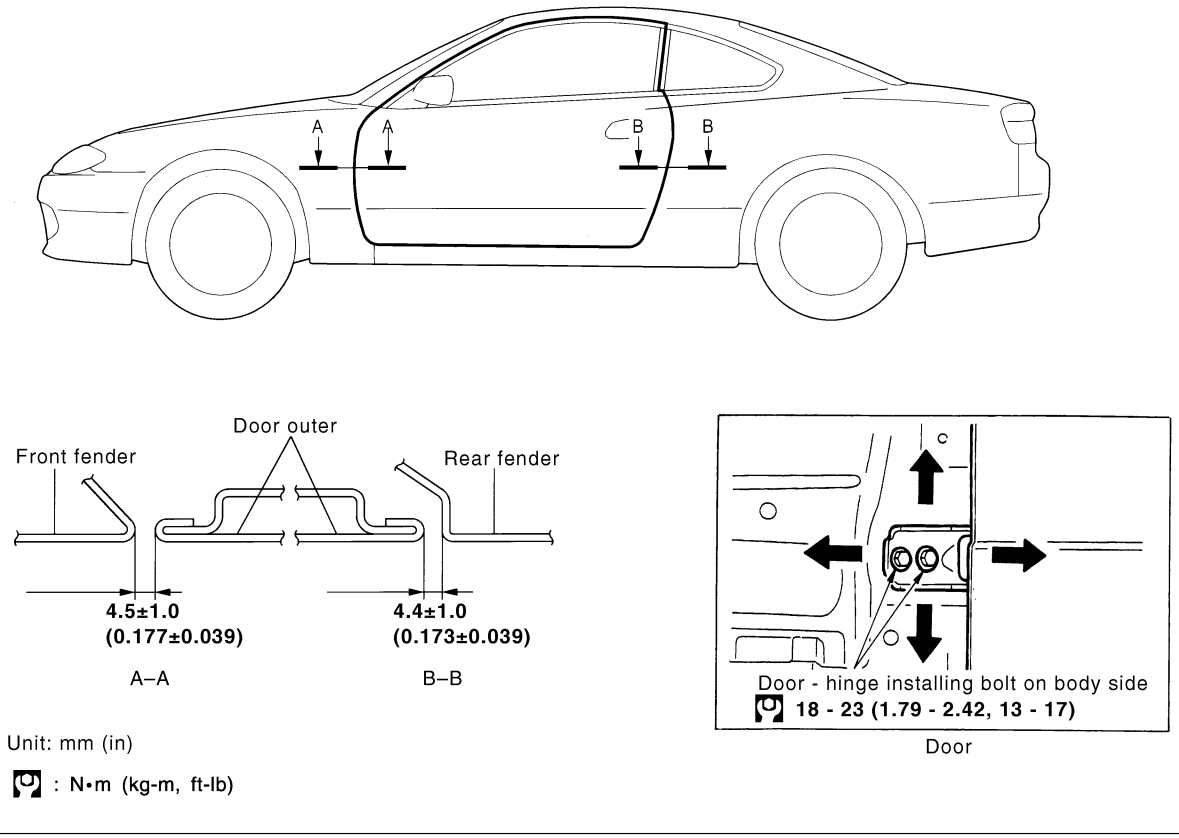

JBT120A

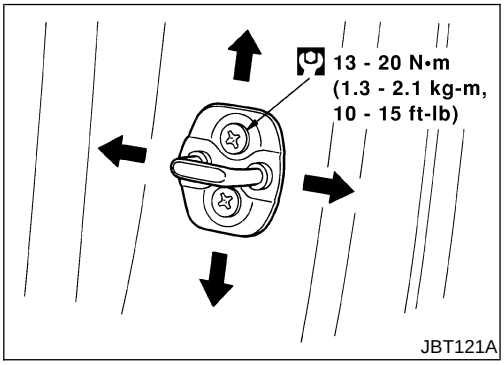

JBT121A

STRIKER ADJUSTMENT

NMBT0006S01

Adjust striker so that it is parallel with advancing direction of door lock.

Door Glass

=NMBT0007

- Make sure that door glass is positioned in glass run groove.
- Make sure that there is no abnormality when door glass is raised or lowered.

DOOR GLASS AND REGULATOR

NMBT0007S01

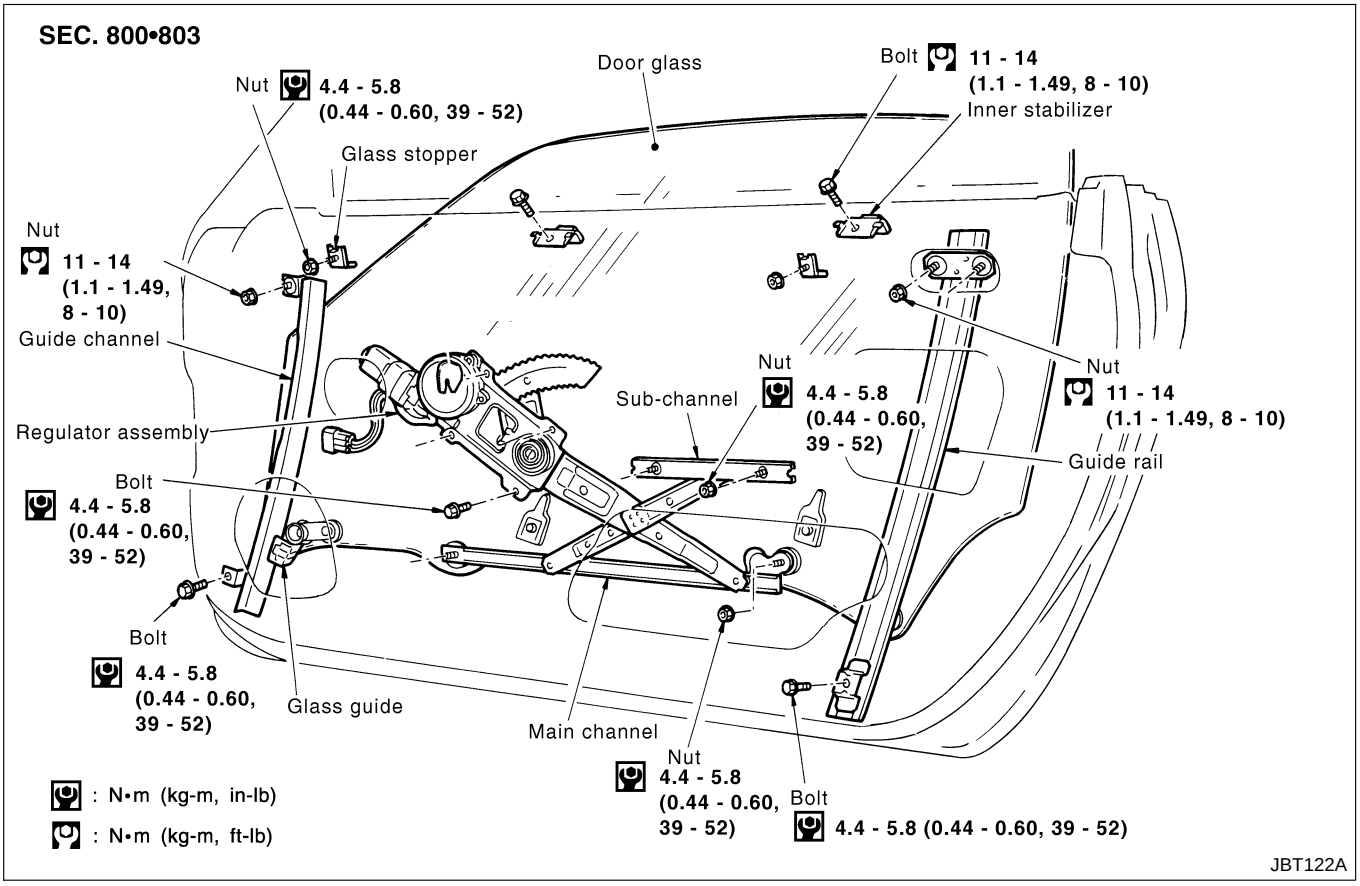

- For removal of door finisher, refer to “DOOR TRIM”, BT-29.
- Remove sealing screen.
- For removal of outside door molding, refer to “EXTERIOR”, BT-34.

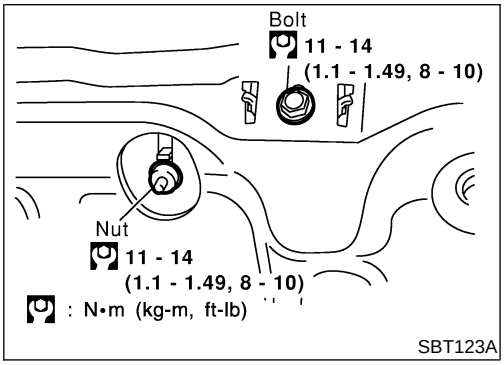

1. Remove glass stopper.
2. Remove inner stabilizer.

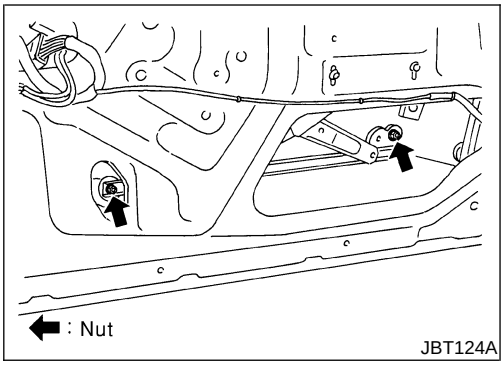

3. Using power window main switch, raise or lower door glass until main channel securing nuts are visible.
4. Remove nuts securing main channel.
5. After removing the glass rear-end roller from the guide rail, remove the glass guide from the guide channel.
6. Lift the glass up and out from the door opening to remove.
7. Remove nuts securing sub-channel.

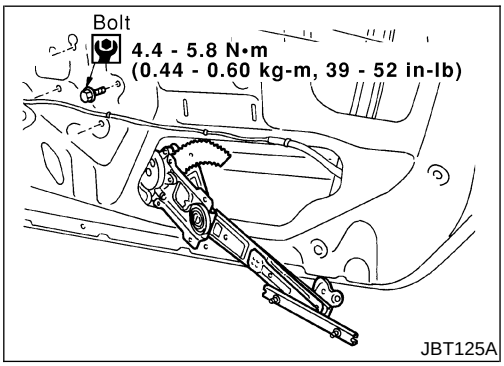

8. Remove regulator assembly.
9. Remove guide channel and guide rail.

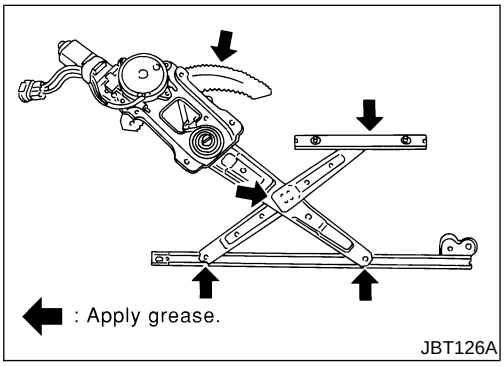

Inspection

NMBT0007S0101

Check regulator assembly for the following parts. Replace faulty parts with new ones.

- Regulator for deformation
- Sliding parts for lubrication
- Gear for wear
- Spring for damage

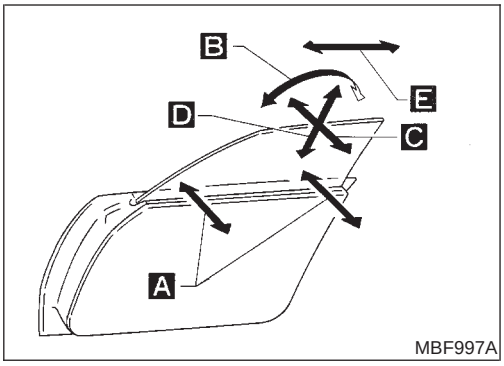

Door Glass Fitting Adjustment

=NMBT0034

The door glass is properly adjusted using the following five methods:

- A In-out adjustment (at the glass waist)
- B Fore-aft tilt adjustment
- C In-out tilt adjustment (at the glass upper stop)
- D Up-stop adjustment
- E Fore-aft adjustment

NOTICE:

When adjusting the door glass, it is not necessary to remove the outside door molding.

Adjustment locations

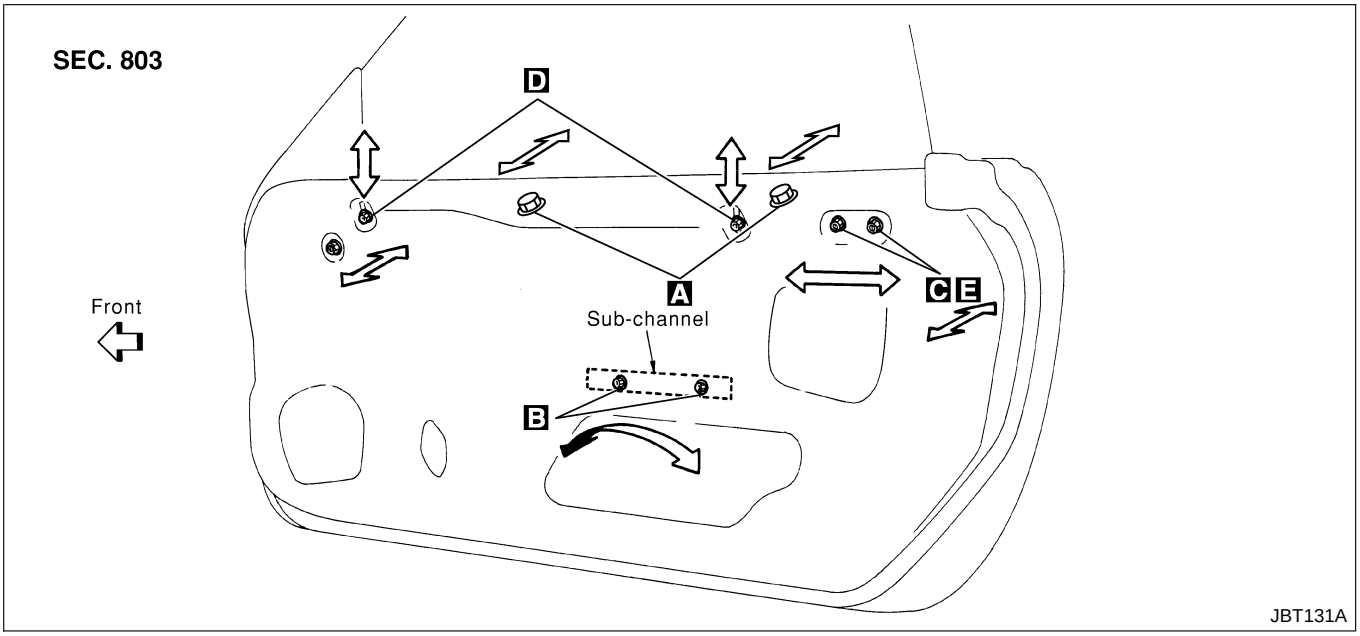

Adjustment standard clearance

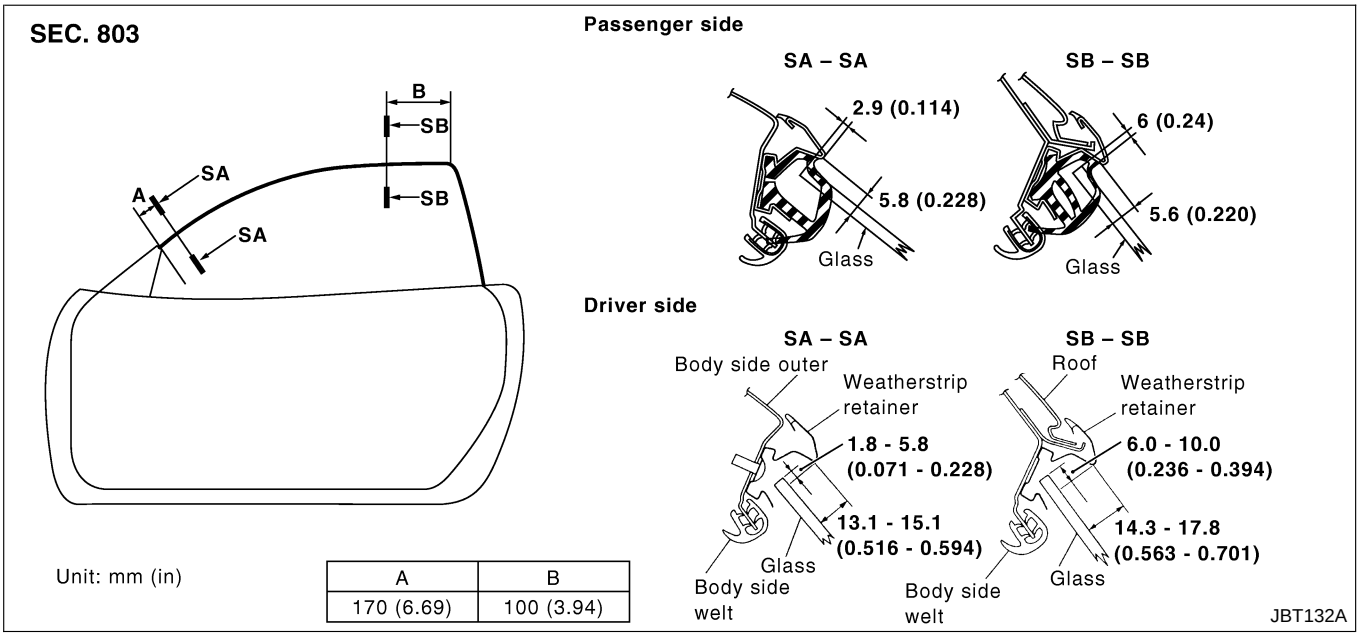

Unit: mm (in)

A	B
170 (6.69)	100 (3.94)

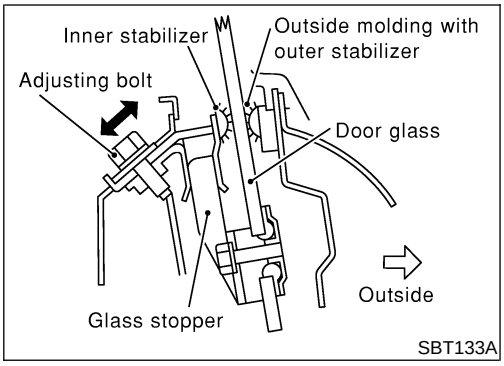

IN-OUT ADJUSTMENT (AT THE GLASS WAIST)

NMBT0034S01

1. Raise door glass until glass stopper is in contact with inner stabilizer, just before the window stops.
2. Loosen adjusting bolts.
3. Lightly press door glass upper end outward so that glass outer surface contacts outer stabilizer. With glass held in that position, press inner stabilizer to glass inner surface and tighten adjusting bolt.

CAUTION:

Make sure nap portions of stabilizers are clean and free from oil, grease, etc.

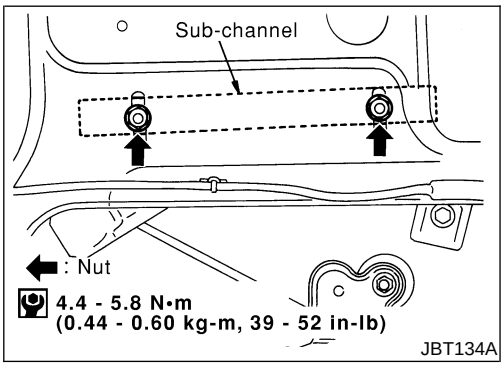

FORE-AFT TILT ADJUSTMENT

NMBT0034S02

- Adjust door glass sub-channel so that the adjustment standard clearances A − A, B − B and C − C (Refer to BT-16) are obtained at the glass and retainer holder/body side weather-strip locations.

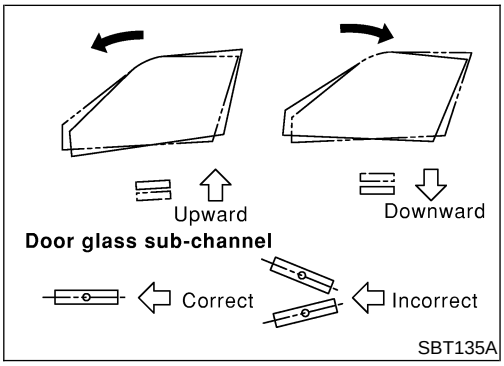

- For sub-channel adjustment procedures, refer to figure at left as a guide.

CAUTION:

- **Make sure door glass sub-channel is horizontal.**
- **The fore-aft tilt adjustment must be made at the same time the fore-aft adjustment is made.**

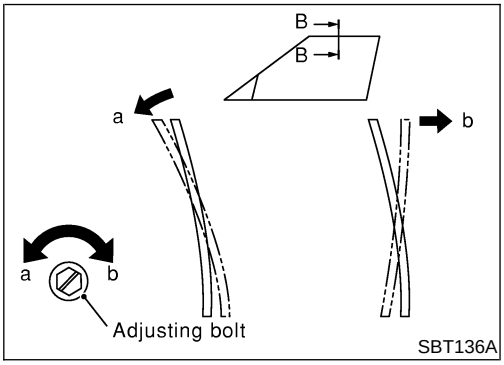

IN-OUT TILT ADJUSTMENT (AT GLASS UPPER STOP)

NMBT0034S03

1. Turn the adjusting bolt at the top edge of the guide rail so that the top edge of the glass is in the fitting standard position. Then lightly press the front inner stabilizer against the glass and tighten the bolt enough [29 to 49 N (3 to 5 kg, 7 to 11 lb)] that there is no change in the glass fitting.

CAUTION:

- **Turn adjusting bolt clockwise to move door glass upper end outward.**
- **Turn adjusting bolt counterclockwise to move door glass upper end inward.**

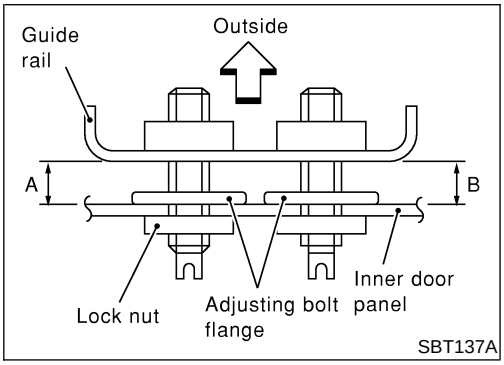

2. After adjusting, check that the glass stopper is inside the opening on the rear inner stabilizer before tightening the bolts.

CAUTION:

- **Make sure door glass sub-channel is horizontal.**
- **The fore-aft tilt adjustment must be made at the same time the fore-aft adjustment is made.**

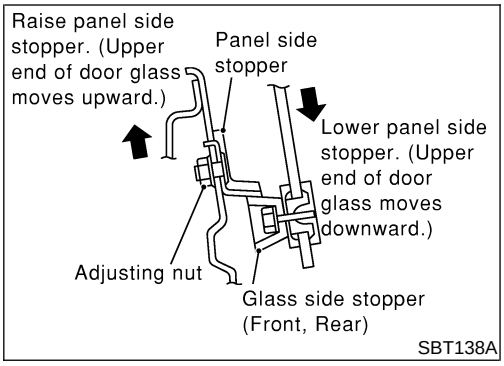

UP-STOP ADJUSTMENT

NMBT0034S04

1. Adjust panel stopper height so that clearance at upper edge of door meets the adjustment standard clearance B − B (Refer to BT-16). Make sure front and rear glass stoppers lightly contact front and rear panel stoppers, then tighten adjusting nuts.
2. If stoppers do not contact each other, adjust sub-channel nut. Refer to "Fore-aft tilt adjustment".
3. Open and close doors to make sure upper end of door glass does not contact retainer holder.

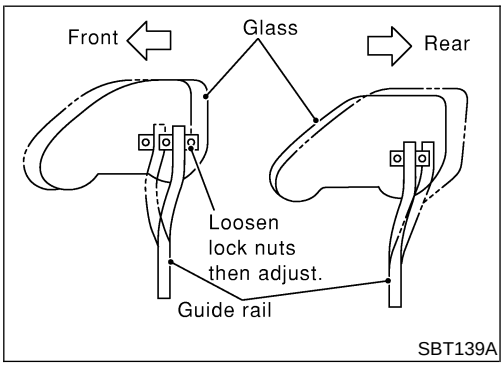

FORE-AFT ADJUSTMENT

NMBT0034S05

1. Adjust guide rail in the fore-aft direction so that when door is closed or opened, the clearance between upper edge of door glass and holder conforms to the adjustment standard clearance B − B (Refer to BT-16).
2. If outer perimeter of door glass interferes with retainer holder when door is opened or closed, refer to "Fore-aft tilt adjustment" for procedures.

CAUTION:

When loosening guide rail lock nut, prevent adjusting bolt from turning by holding it with a standard screwdriver.

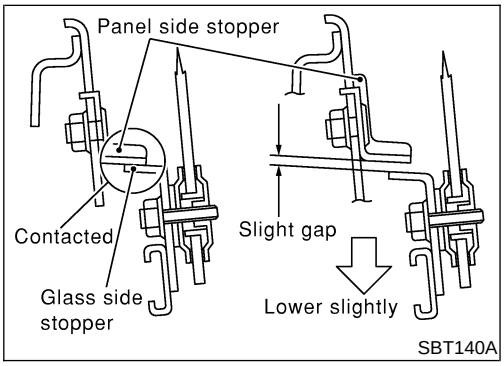

NOTE:

Lower the glass slightly [5 to 10 mm (0.20 to 0.39 in)] until the glass side stopper comes off the panel side stopper.

CAUTION:

Do not lower the glass excessively.

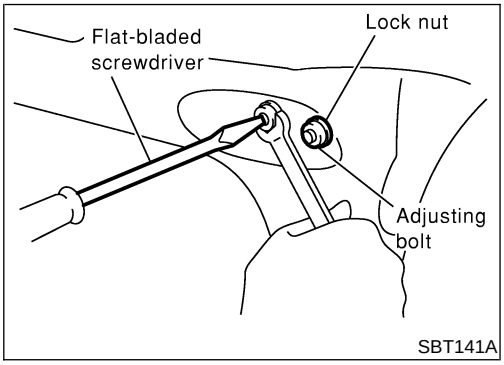

- **After completing door glass adjustment, retighten all lock nuts.**

CAUTION:

While tightening lock nuts, hold adjusting bolts using a standard screwdriver to prevent them from turning.

Door Limit Switch Reset (Driver side only)

=NMBT0008

RESET CONDITIONS

NMBT0008S01

After each of the following operations are performed, reset the limit switch (with built-in motor).

- Regulator removal and installation
- Removal of motor from regulator
- Operation of regulator as a single unit
- Door glass removal and installation
- Glass run removal and installation
- Fitting adjustment

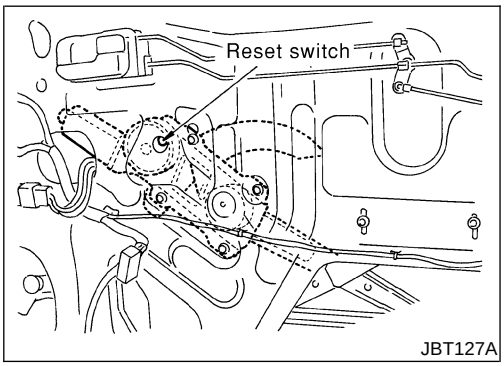

RESET PROCEDURES

NMBT0008S02

After installing parts, proceed as follows:

1. Close the door window completely.
2. Press the reset switch and open the door window completely.
3. Release the reset switch. After making sure the reset switch has returned to the original position, close the door window completely.
4. The limit switch is now reset.

CAUTION:

Be sure to manually open or close the door window. (Do not use the automatic open-close procedures.)

Door Lock

=NMBT0010

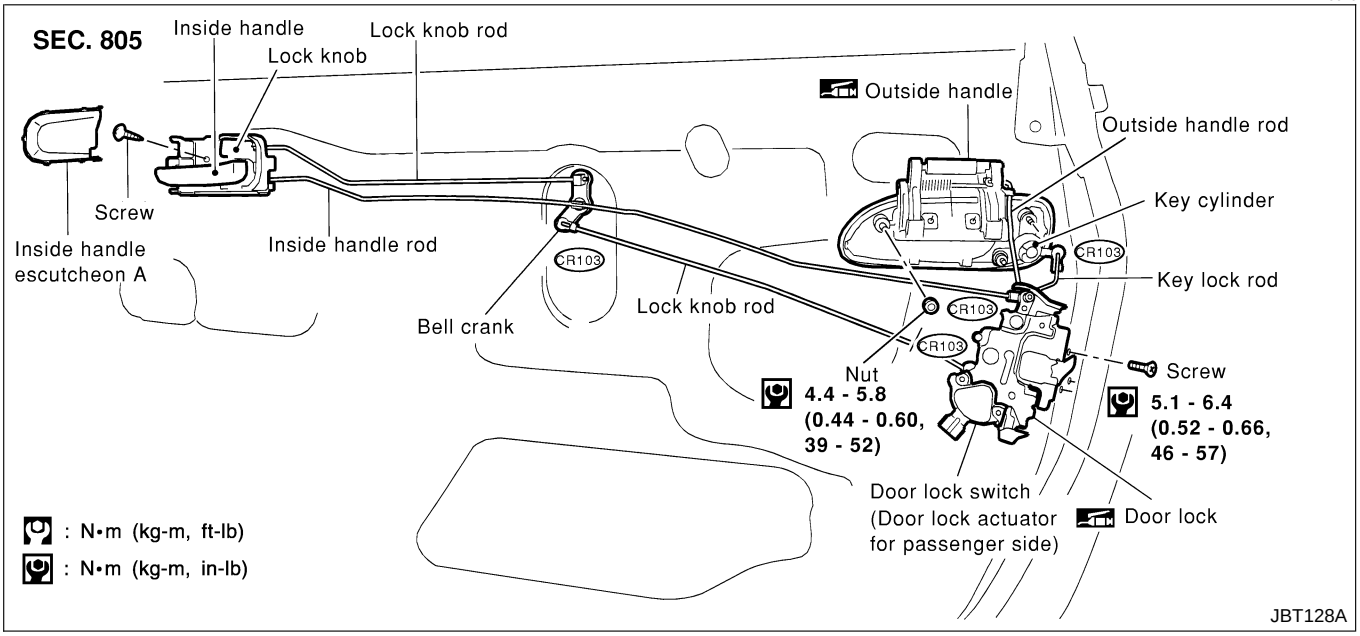

- For removal of door finisher, refer to “DOOR TRIM”, BT-29.
- Remove sealing screen.

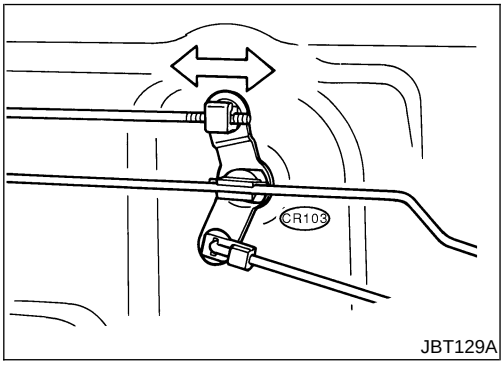

BELL CRANK ADJUSTMENT

NMBT0010S01

CAUTION:

Before adjusting bell crank, make sure that rod is installed to inside handle.

After installing door lock and inside handle, set them in the lock position. Expand rod holder. Remove rod free play at joining area and set rod in position.

After adjusting bell crank adjustments have been made, operate door lock knob, door lock switch and door key to make sure that they lock and unlock properly.

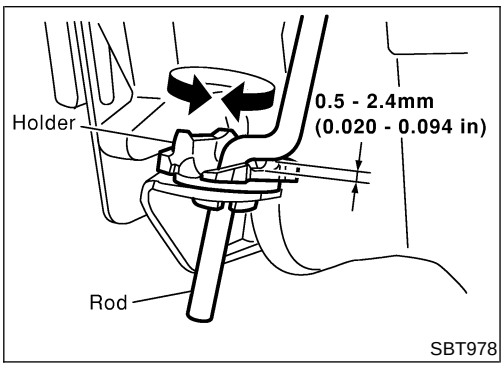

OUTSIDE HANDLE ROD ADJUSTMENT

NMBT0010S02

Rotate rod holder so that rod-to-holder clearance is adjusted as shown in the figure at left.

CAUTION:

Make sure that rod-to-holder clearance is not “0” mm (0 in), and that rod is not held pressed.

REMOVAL

=NMBT0010S03

- For removal of front door finisher, refer to "DOOR TRIM", BT-29.
- Remove sealing screen.
- For removal of front door glass and guide rail, refer to "Door Glass", BT-14.

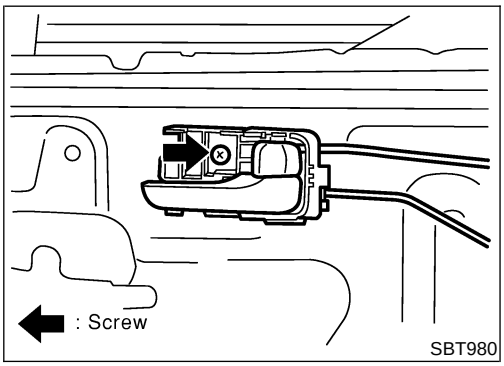

1. Remove inside handle escutcheon A.
2. Remove screw securing inside handle.
3. Detach bell crank at lock knob joining area.
4. Detach inside handle rod on the door lock assembly side.
5. Slide inside handle backward and remove inside handle.
6. Remove rod from inside handle.
7. Detach key lock rod and outside handle rod at joining area (on the outside handle side).
8. Disconnect door lock actuator connector.
9. Remove screws securing door lock assembly, then remove door lock assembly.

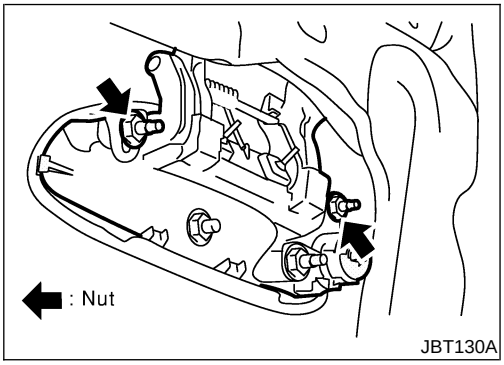

10. Remove nuts securing outside handle, then remove outside handle assembly.
11. Remove nuts securing key cylinder, then remove key cylinder.

Removal and Installation

NMBT0012

CAUTION:

- **Disconnect ground terminal from battery in advance.**
- **Disconnect air bag system line in advance.**
- **Never tamper with or force air bag lid open, as this may adversely affect air bag performance.**
- **Be careful not to scratch pad and other parts.**

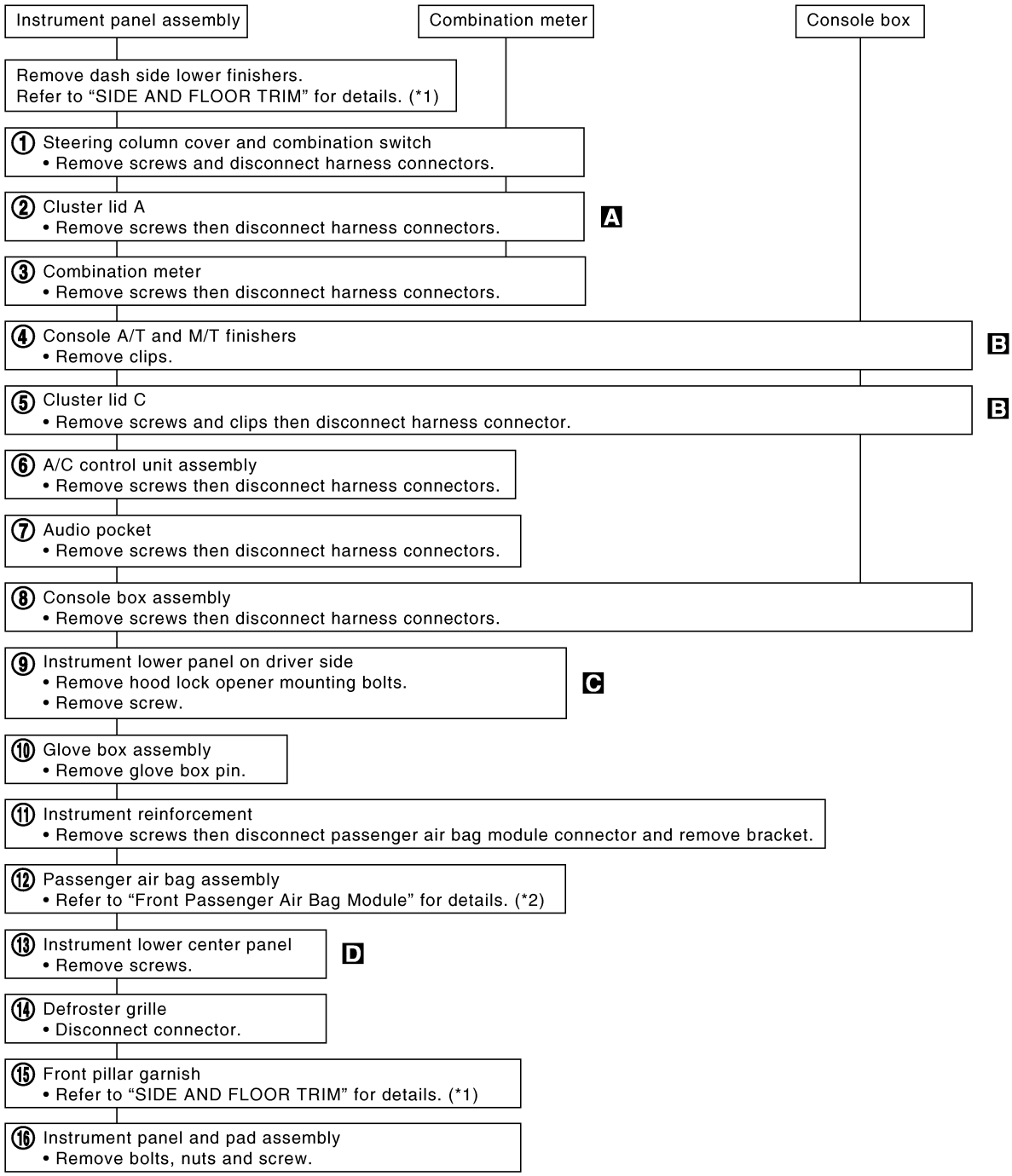

SBT101A

*1 BT-26 *2 RS-14

SEC. 248•251•280•487•680•685

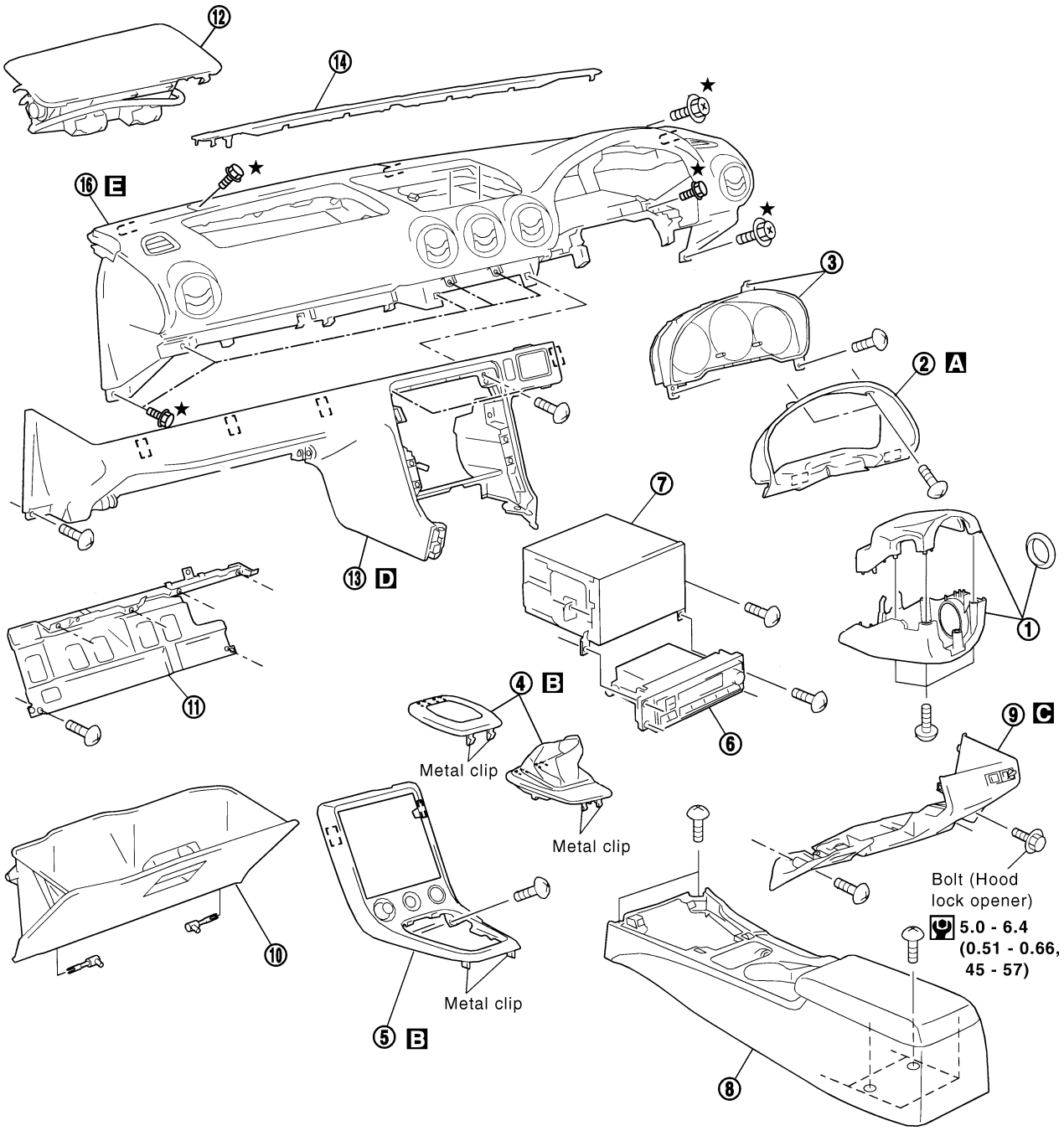

: N•m (kg-m, in-lb)

★ : Instrument panel assembly mounting bolts

JBT102A

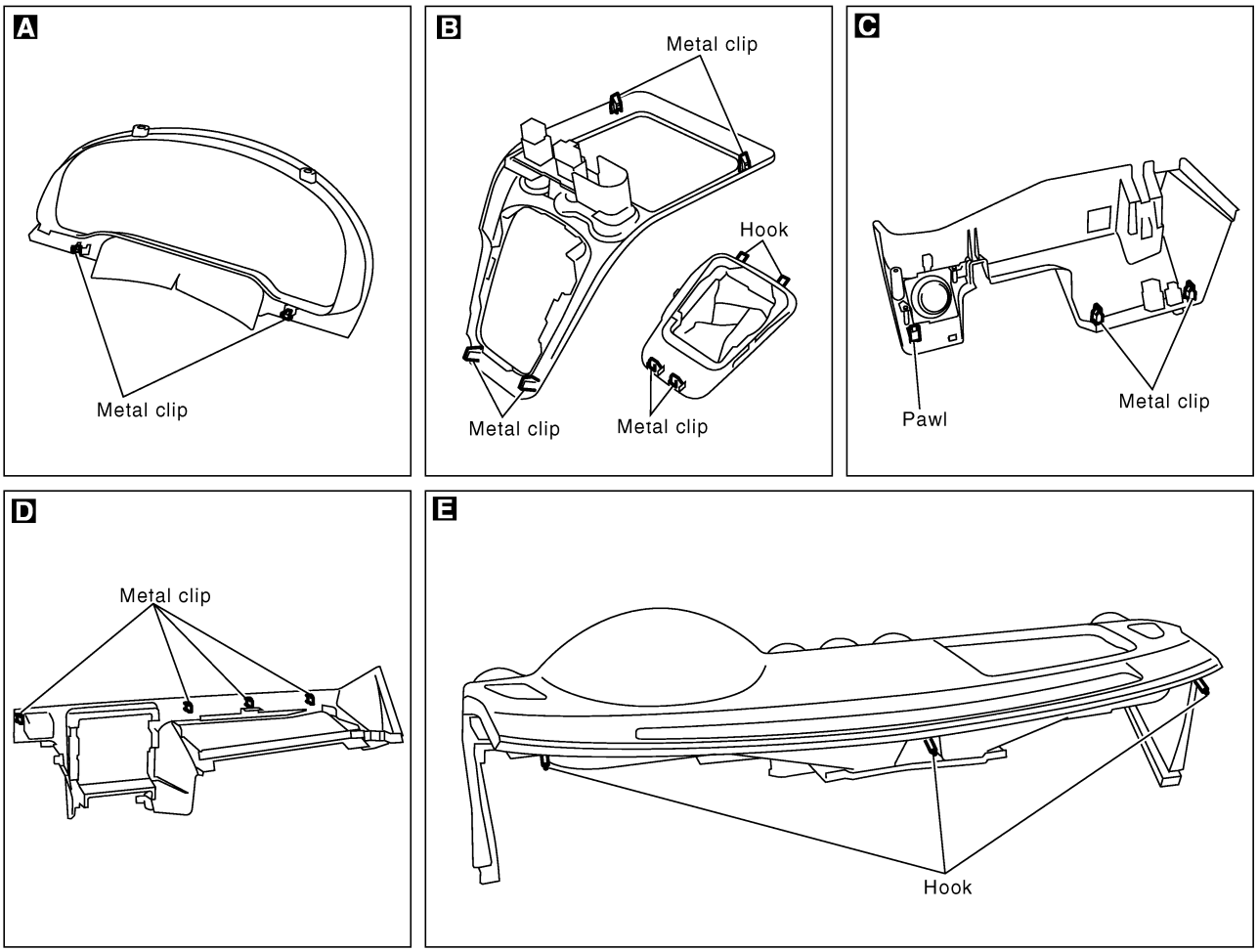

SBT103A

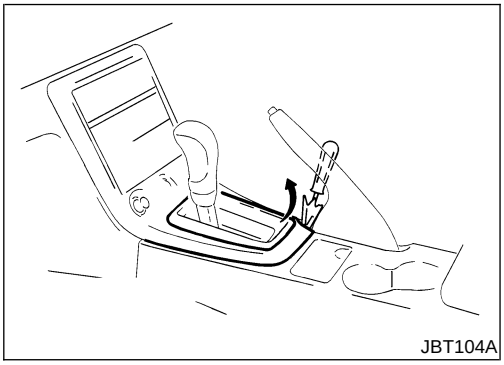

JBT104A

A/T console finisher and cluster lid C

1. Insert a flat-bladed screwdriver with a cloth wrapped around it into the cut-out to remove the rear metal clip.
2. While holding down the rear part of cluster lid C, grasp the rear part of the A/T console finisher and lift up to remove.

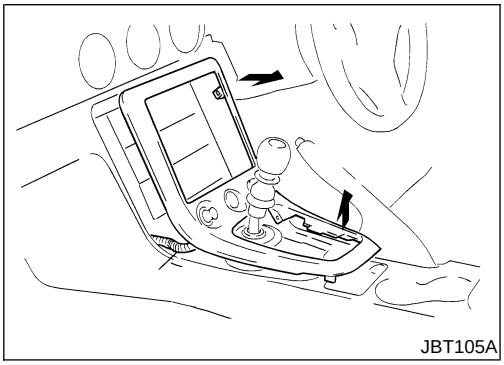

JBT105A

3. Remove screws.
4. First remove the lower metal clip, then the upper metal clip. Then remove cluster lid C.

CAUTION:

Be careful not to trap the harness when attaching cluster lid C.

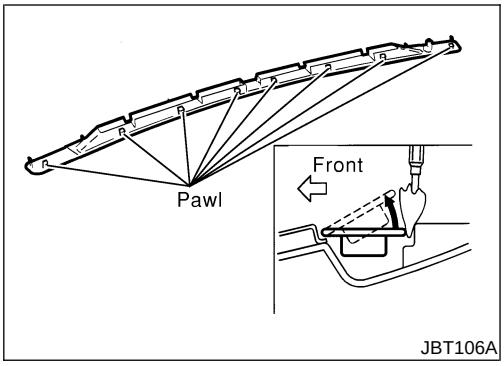

Defroster grille

Insert a flat-bladed screwdriver (or similar tool) with a cloth wrapped around it into the front defroster grille to remove the pawls.

Removal and Installation

NMBT0013

CAUTION:

- **Wrap the tip of flat-bladed screwdriver with a cloth when removing metal clips from garnishes.**

1. Remove front and rear seats. Refer to “FRONT SEAT” and “REAR SEAT” for details, BT-38 and BT-39.
2. Remove front and rear seat belts. Refer to RS-4 and RS-5, “Front Seat Belt” and “Rear Seat Belt” for details.
3. Remove kicking plates. B
4. Remove body side welts.
5. Remove dash side finishers. C
6. Remove front pillar garnishes. D
7. Remove rear side finishers. E
8. Remove high-mounted stop lamp. F
9. Remove rear parcel shelf finisher. L
10. Remove seatback center and side finishers.
11. Remove rear pillar finishers. G
12. Remove foot rest.
13. Remove accelerator pedal stopper.
14. Remove carpet hook.
15. Remove floor carpet.

SEC. 769

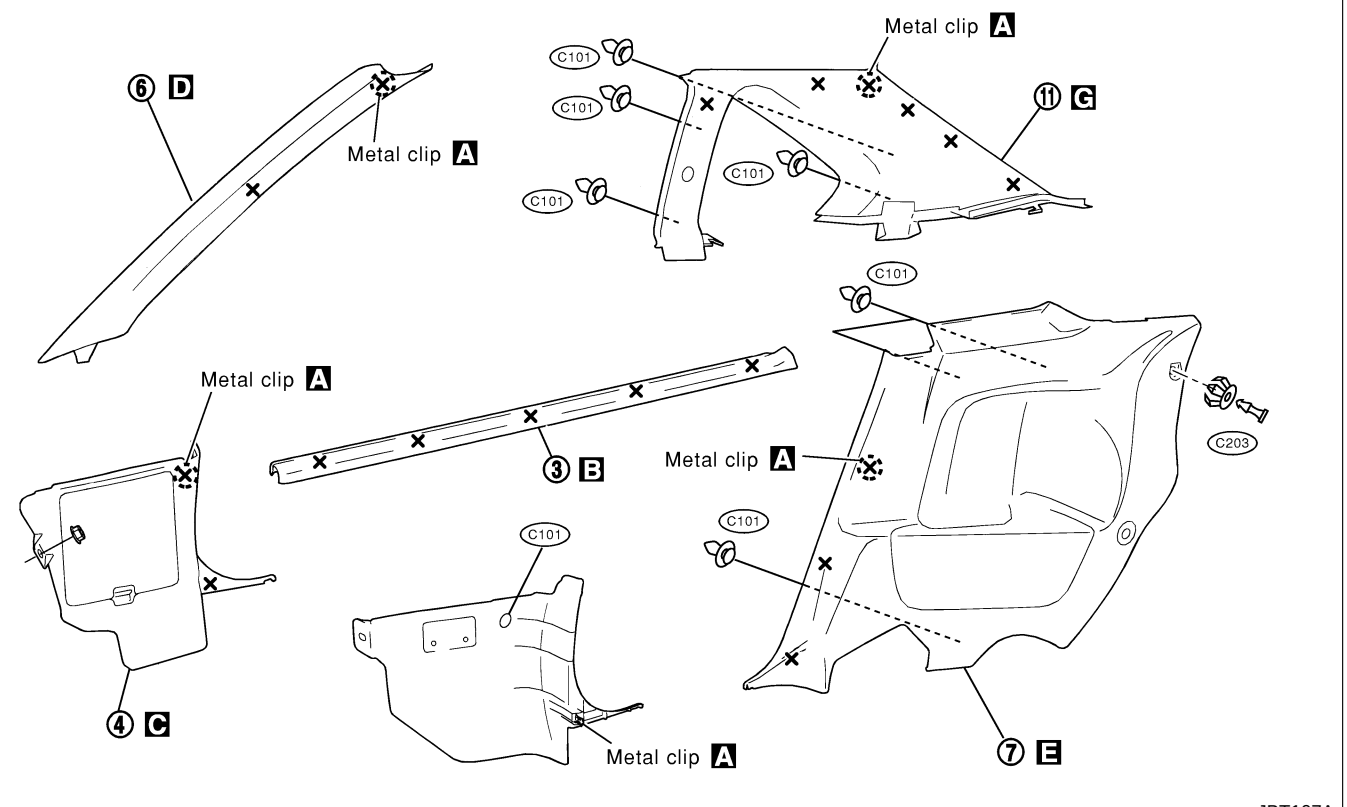

JBT107A

SEC. 799

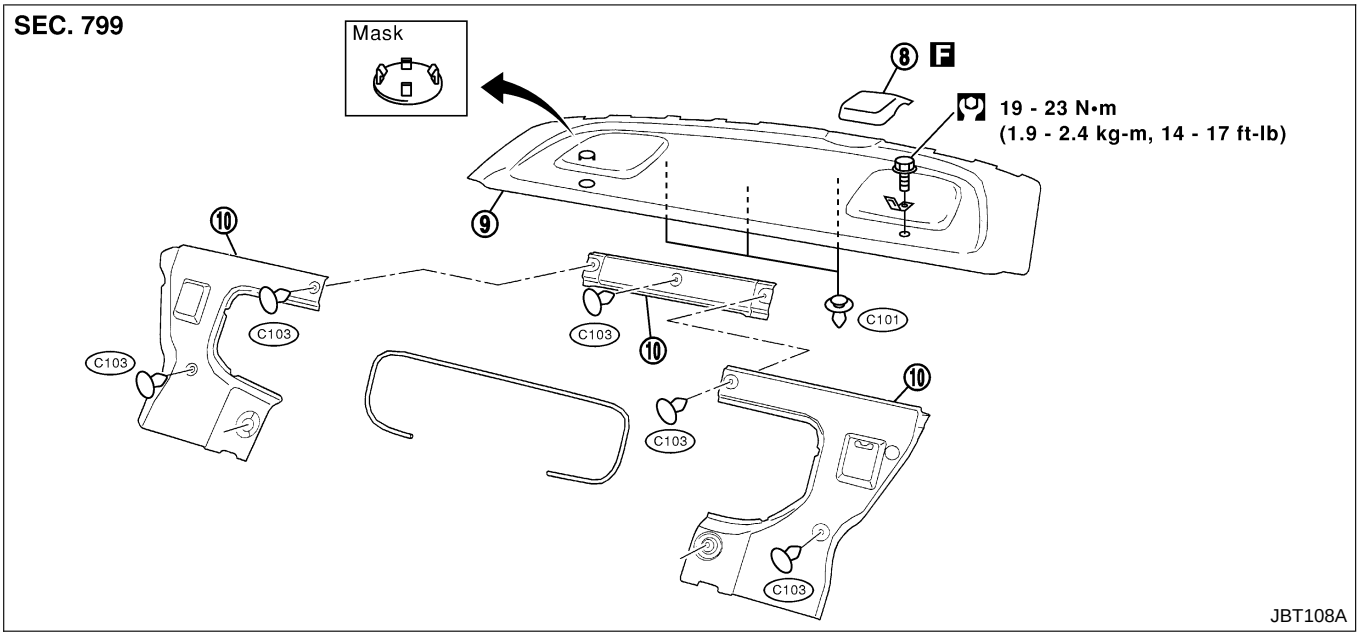

SEC. 749

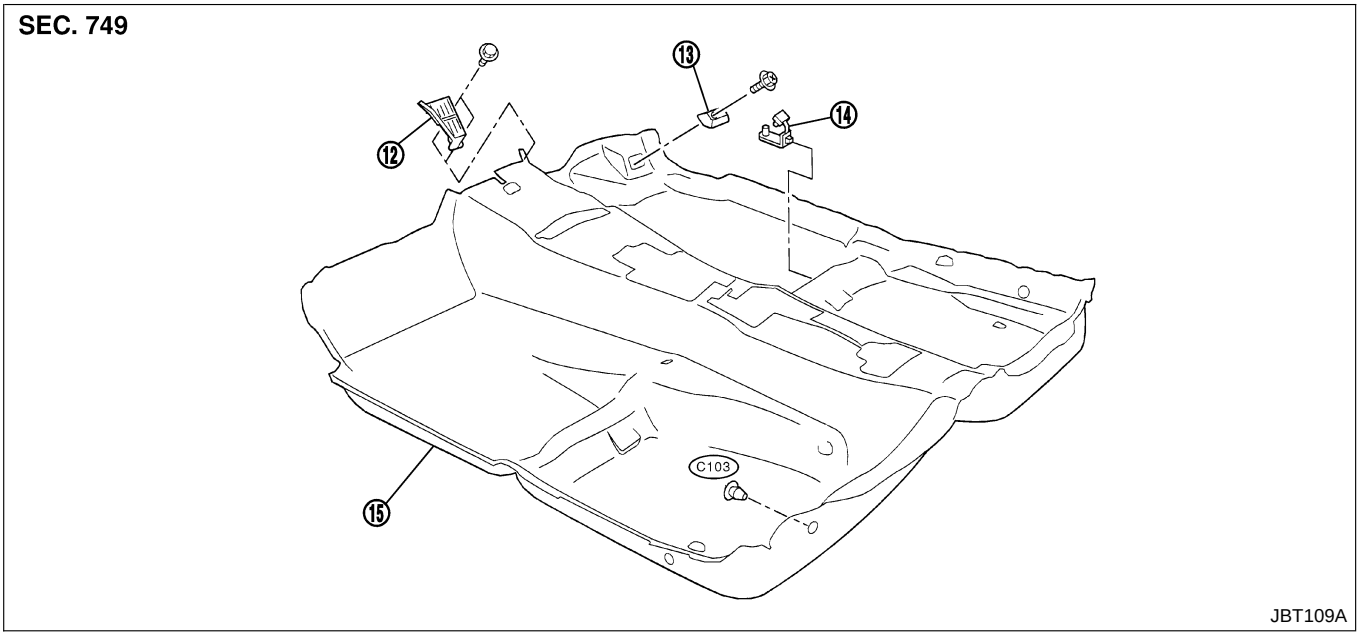

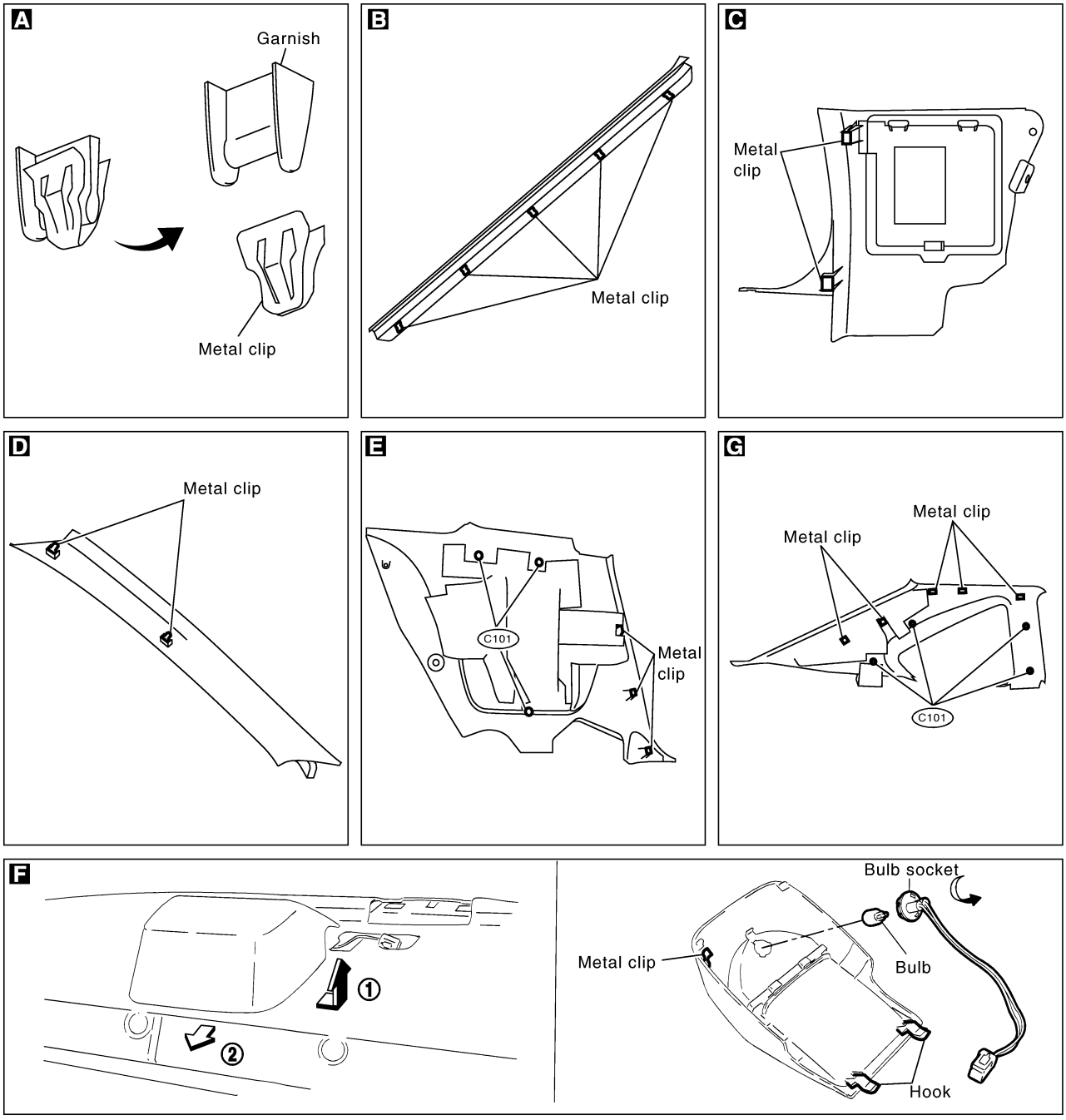
A
Garnish
Metal clip
B
Metal clip
C
Metal clip
D
Metal clip
E
C101
Metal clip
G
Metal clip
Metal clip
C101
F
①
②
Bulb socket
Metal clip
Bulb
Hook

JBT110A

Removal and Installation

NMBT0014

1. Remove inside handle escutcheon. A
2. Remove door pull handle.
3. Remove grip cover. (Passenger side) B
4. Remove screw. (Passenger side)
5. Remove screw and clip securing door finisher.
6. Remove clips securing door finisher.
7. Lift out door finisher.
   Disconnect the connectors, then remove power window switch finisher. C

SEC. 251•805•809

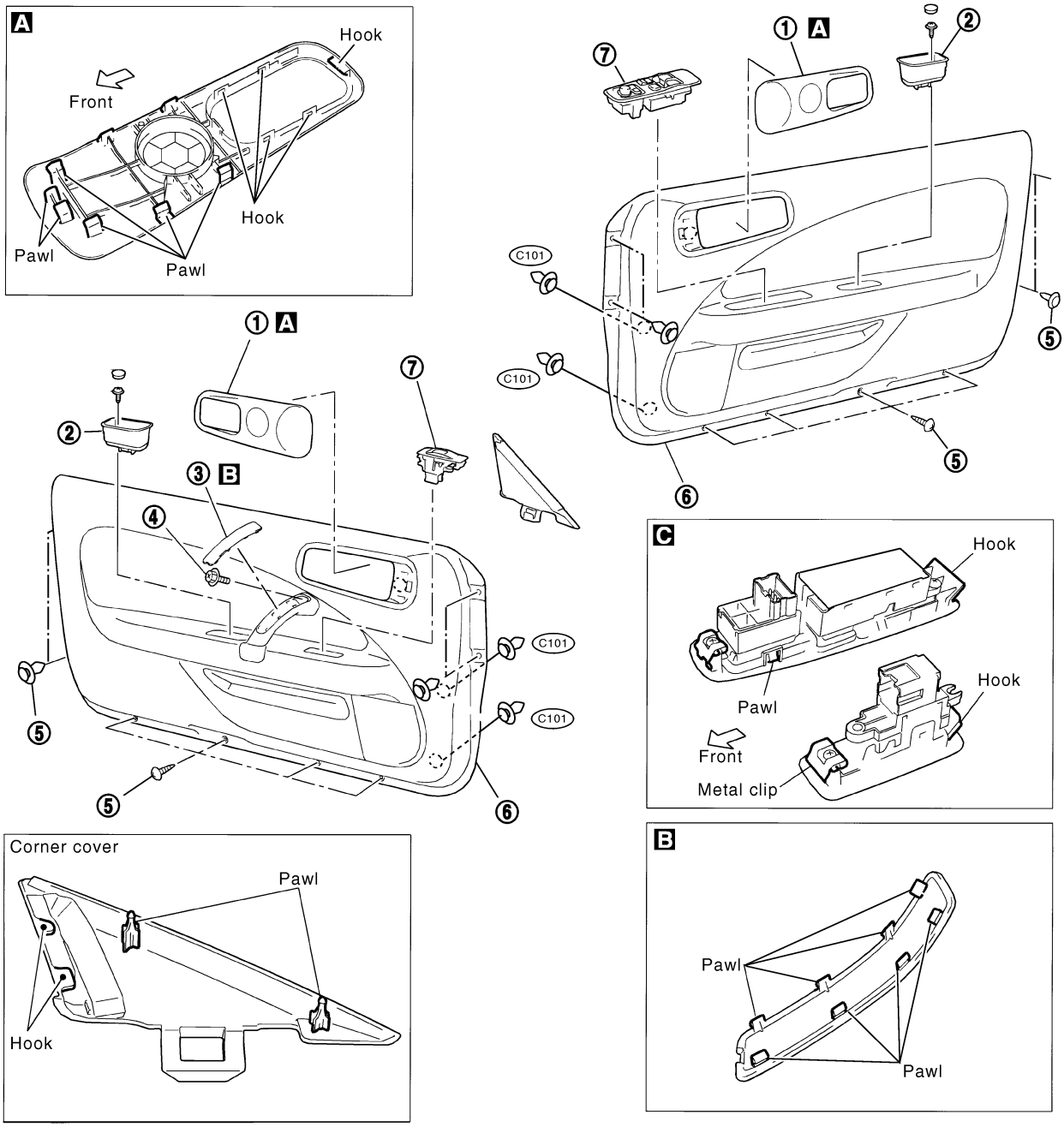

JBT111A

Removal and Installation

NMBT0015

1. Remove rear seat. Refer to “REAR SEAT” for details, BT-39.
2. Remove shoulder anchor bolts. Refer to RS-4, “Front Seat Belt” for details.
3. Remove front pillar garnishes, kicking plates, rear side finishers, rear parcel shelf finisher and rear pillar finishers. Refer to “SIDE AND FLOOR TRIM” for details, BT-26.
4. Push back the front seatback.
5. Remove spot lamp switch, then disconnect connectors. (Except model with sunroof) A
6. Remove sunroof and spot lamp switch, then disconnect connectors. (Model with sunroof) B
7. Remove sunroof welt. (Model with sunroof)
8. Remove interior lamp assembly, then disconnect connectors. C
9. Remove inside mirror.
10. Remove sun visors.
11. Remove clips securing headlining, then remove headlining from vehicle through front passenger side.

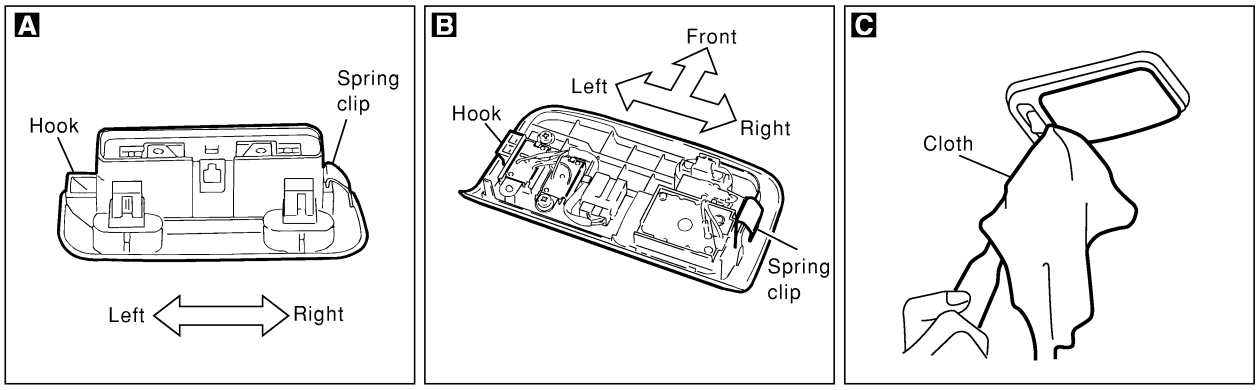

JBT112A

SEC. 264•738•963•964

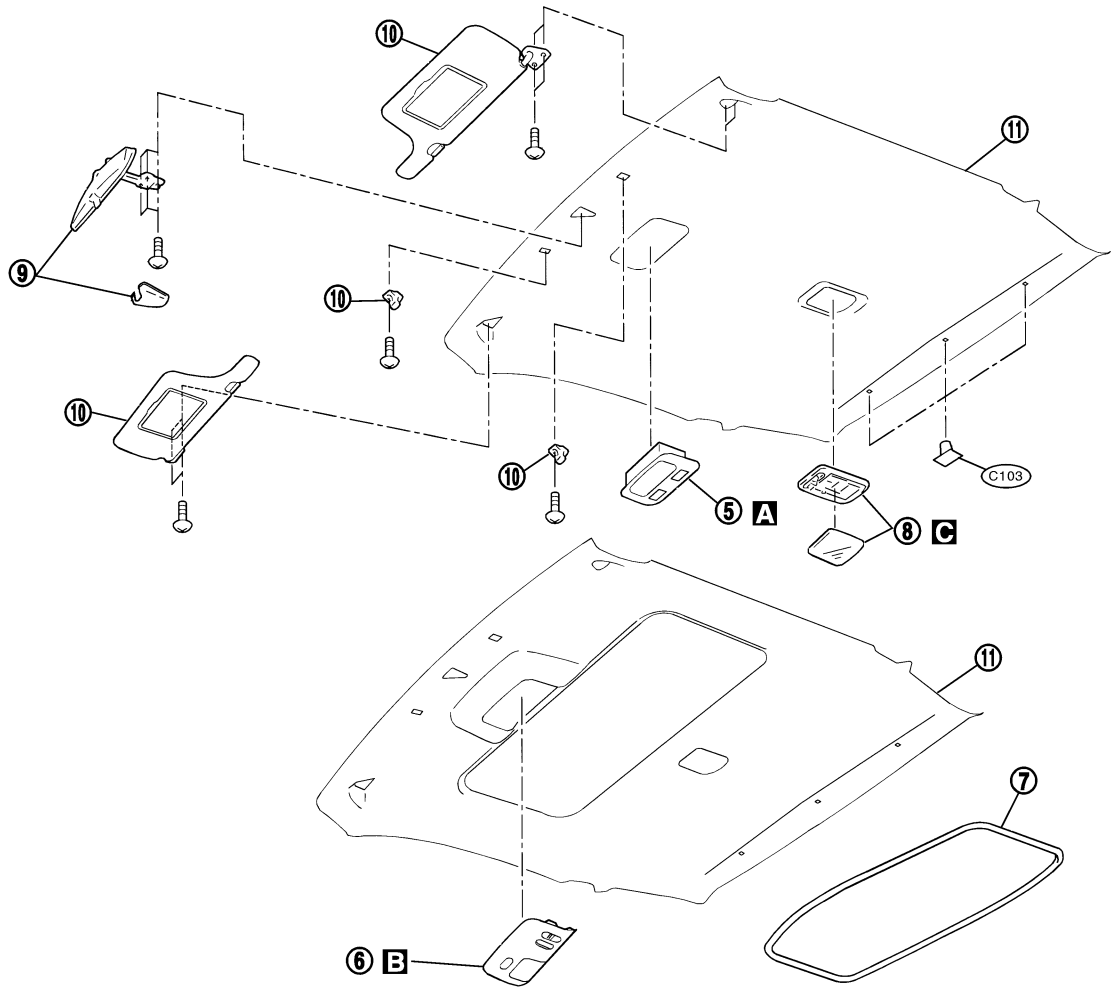

JBT113A

Removal and Installation

NMBT0016

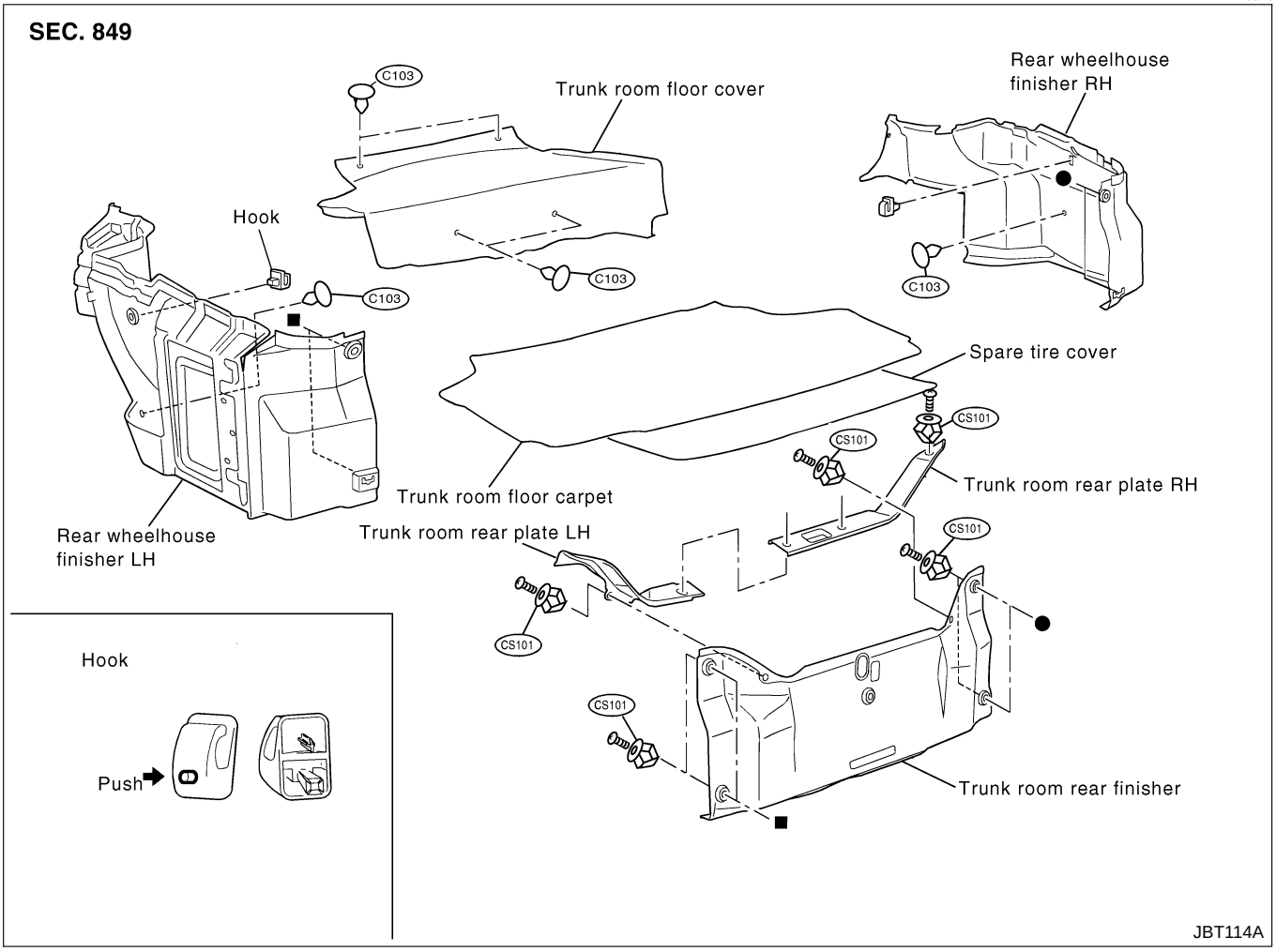

Removal and Installation

NMBT0017

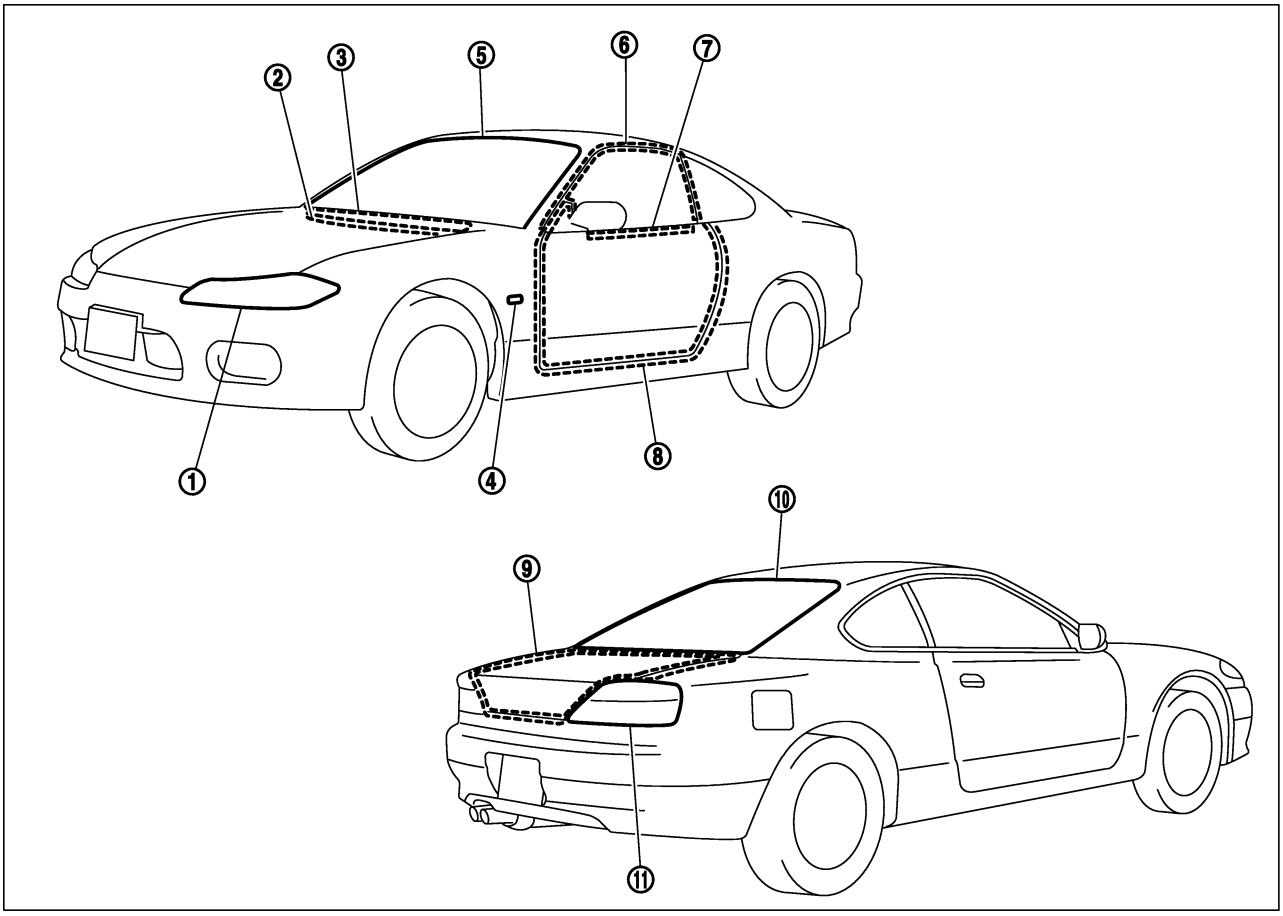

① Headlamp

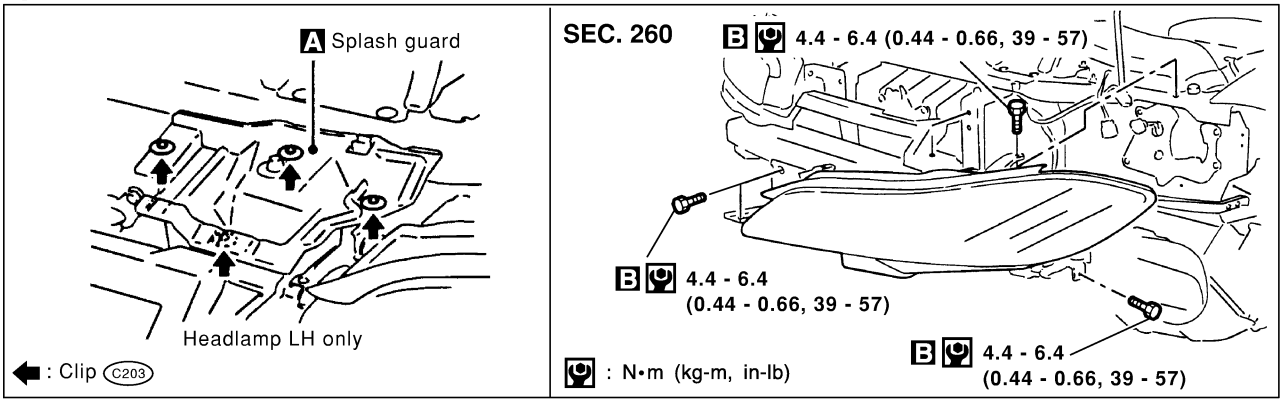

JBT142A

1. Remove front bumper fascia assembly. Refer to “BODY FRONT END”, BT-6 for details.
2. Remove splash guard. (Only left side) A
3. Remove bolts. B
4. Extract headlamp assembly.

②③ Cowl top seal and cowl top grille

SEC. 660

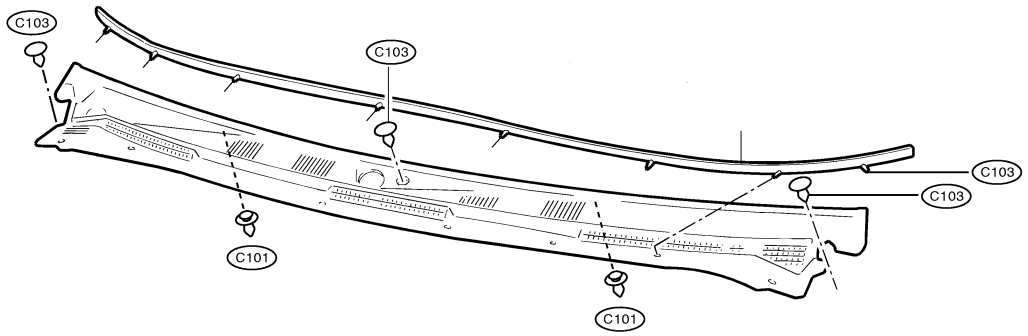

④ Side turn signal lamp

SEC. 262

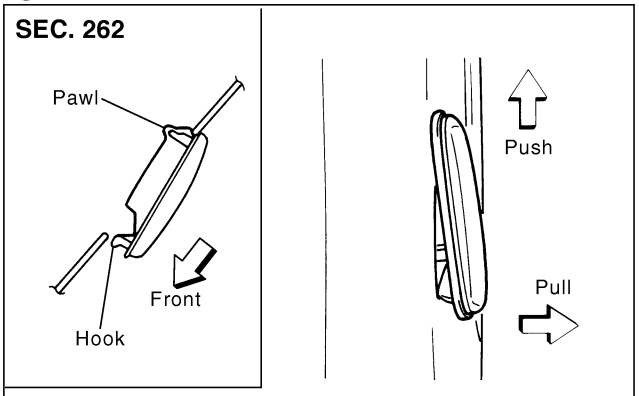

⑤ Windshield molding

SEC. 720

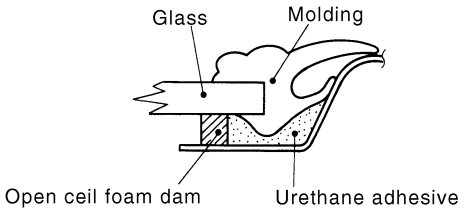

⑥ Drip molding

SEC. 766

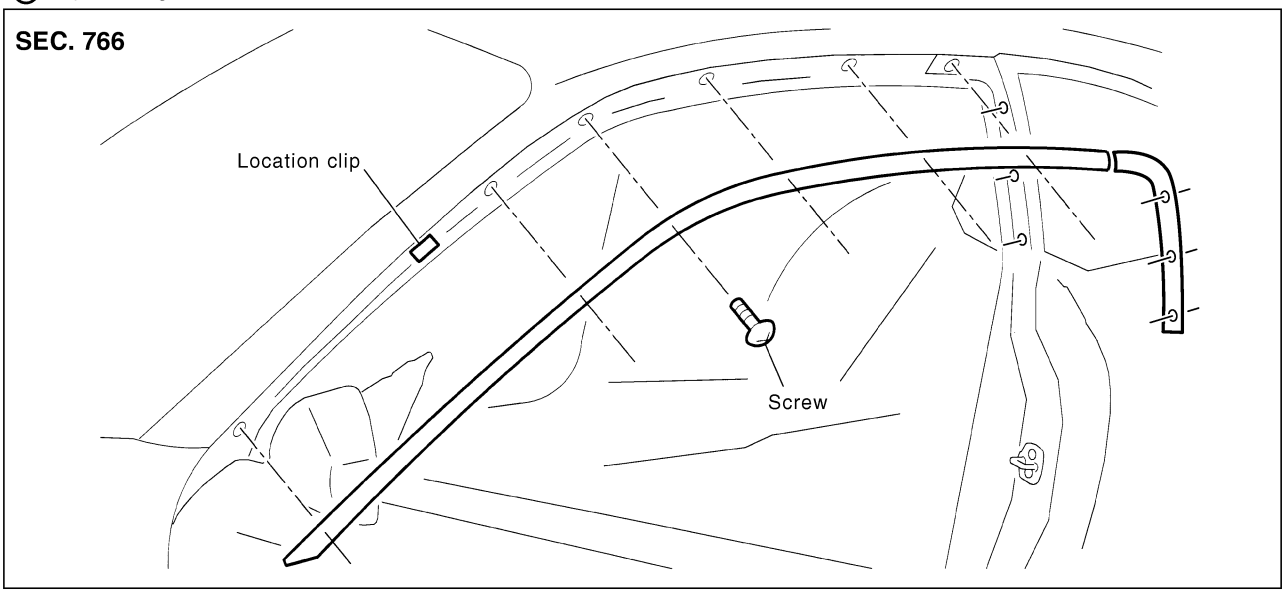

JBT143A

⑦ Door outside molding

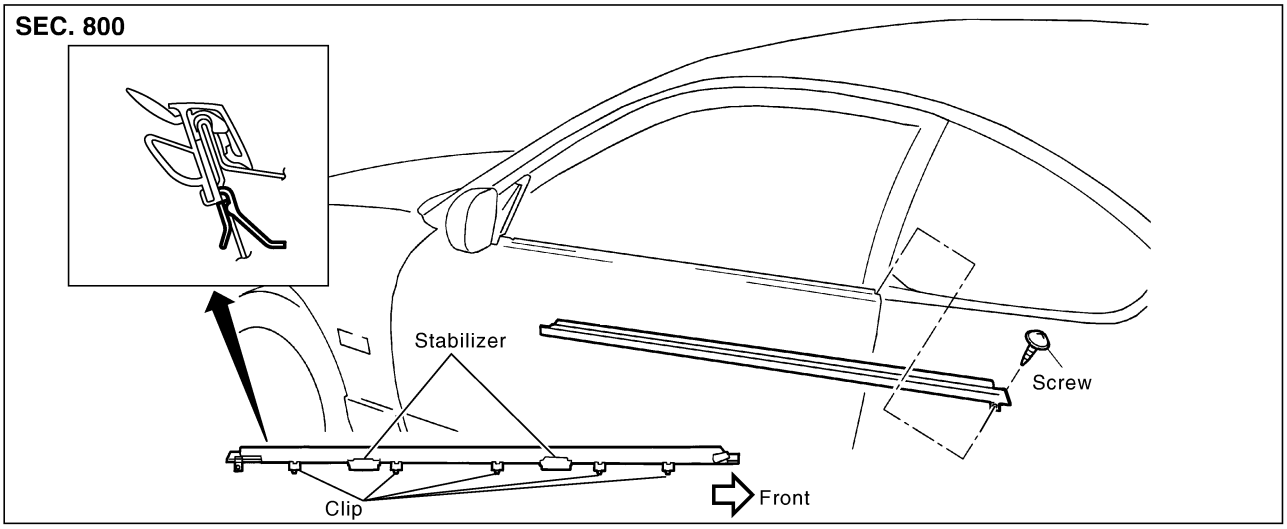

⑧ Door weatherstrip

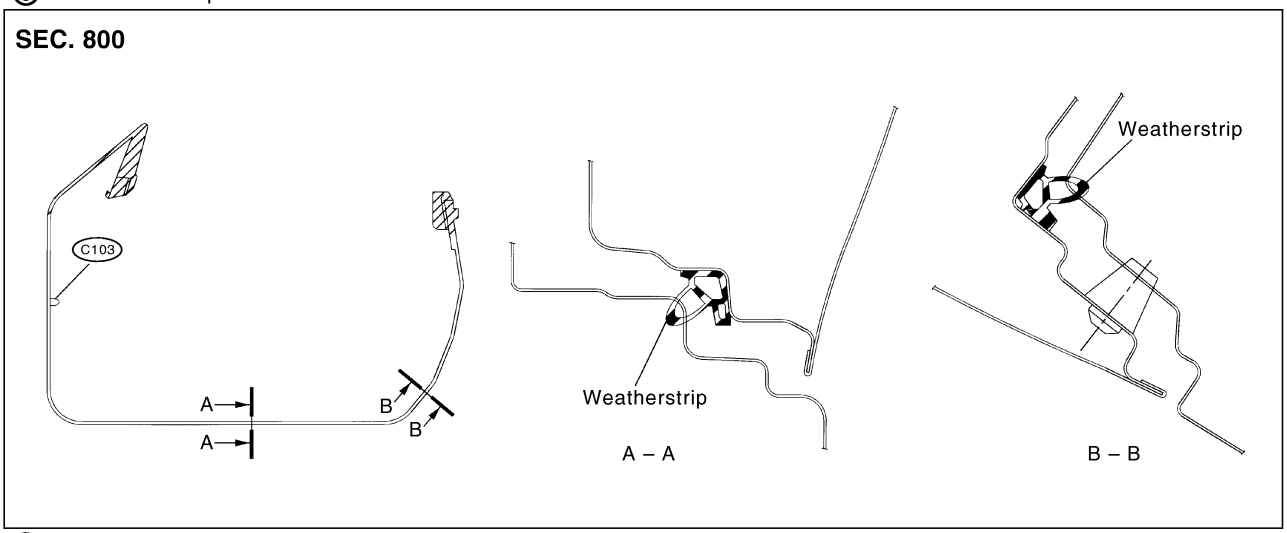

⑨ Trunk lid weatherstrip

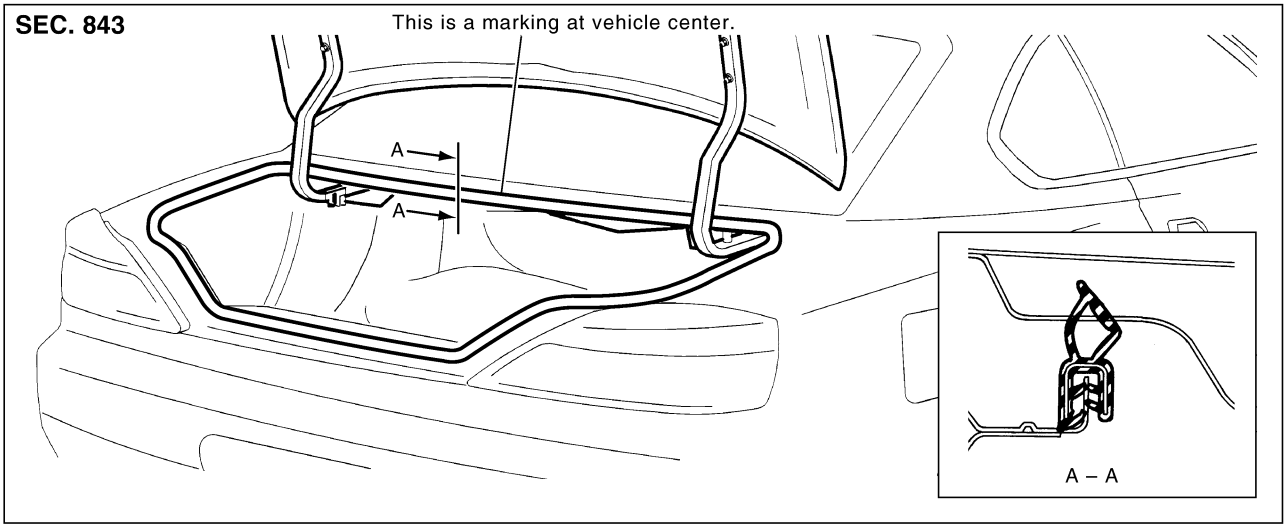

JBT144A

⑩ Rear window molding

SEC. 720

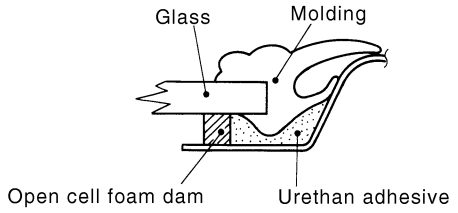

⑪ Rear combination lamp

SEC. 265

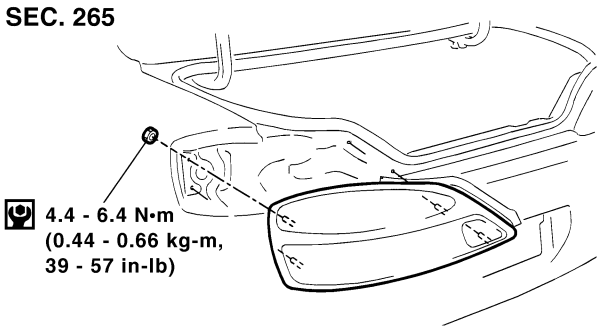

JBT145A

For removal of rear combination lamp, remove left and right rear wheel house finishers. Refer to "TRUNK ROOM TRIM", BT-33.

Removal and Installation

NMBT0018

- When removing or installing the seat trim, carefully handle it to keep dirt out and avoid damage.

SEC. 868 • 870

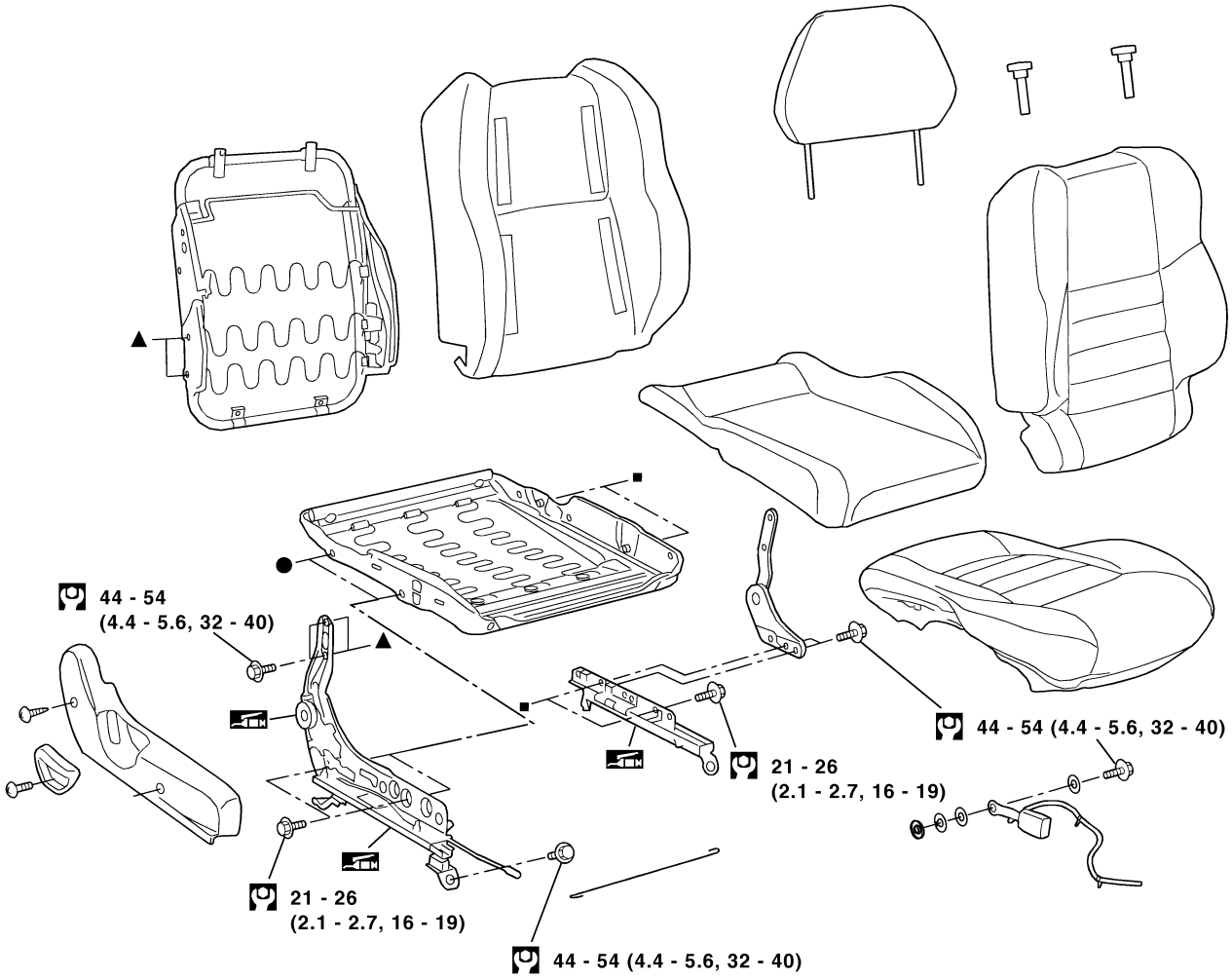

: N•m (kg-m, ft-lb)

JBT115A

Removal and Installation

NMBT0019

SEC. 880

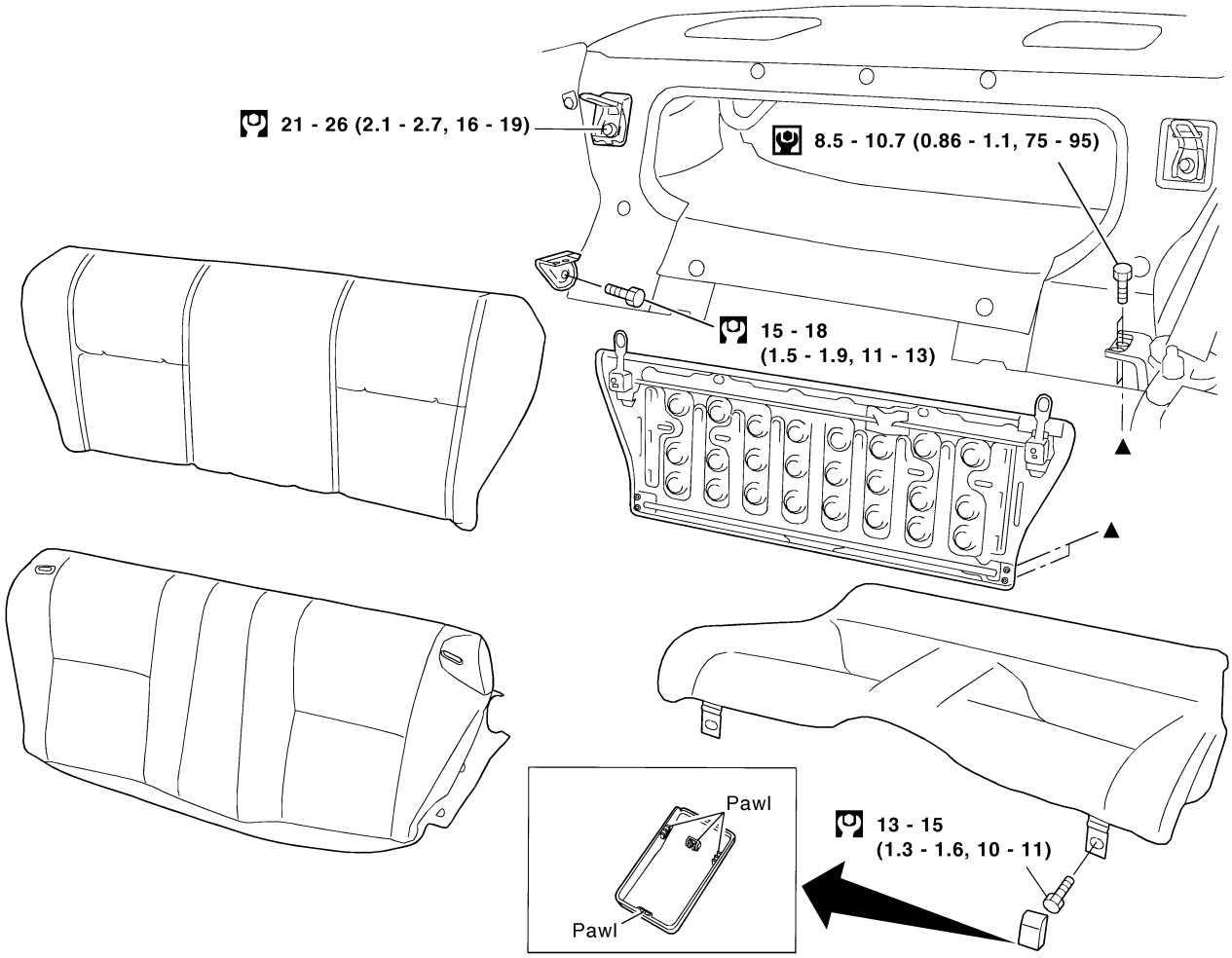

: N•m (kg-m, in-lb)

: N•m (kg-m, ft-lb)

JBT116A

Adjustment

NMBT0020

Install motor & limit SW assembly and sunroof rail assembly in the following sequence:

1. Arrange equal lengths of link and wire assemblies on both sides of sunroof opening.
2. Connect sunroof connector to sunroof switch and positive (+) power supply.
3. Set lid assembly to fully closed position A by operating OPEN switch and TILT switch.
4. Fit outer side of lid assembly to the surface of roof on body outer panel.
5. Remove motor, and keep OPEN switch pressed until motor pinion gear reaches the end of its rotating range.
6. Install motor.
7. Check that motor drive gear fits properly in wires.
8. Press TILT-UP switch to check lid assembly for normal tilting.
9. Check sunroof lid assembly for normal operations (tilt-up, tilt-down, open, and close).

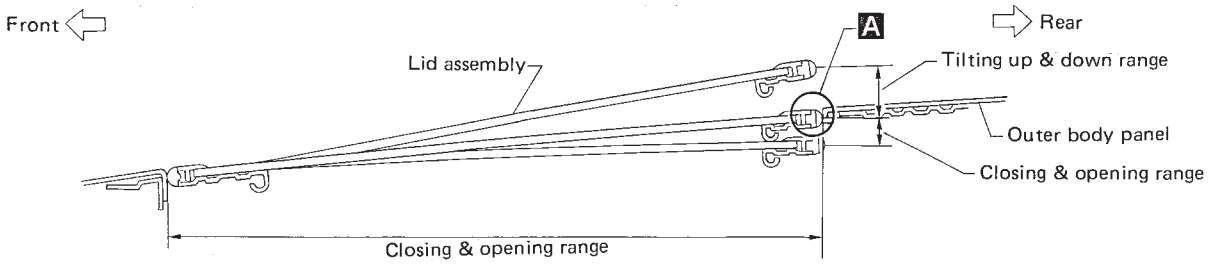

SBF920F

Removal

NMBT0021

- After any adjustment, check sunroof operation and lid alignment.
- Handle finisher plate and glass lid with care so not to cause damage.
- It is desirable for easy installation to mark each point before removal.

CAUTION:

- **Always work with a helper.**
- **Before removal, fully close glass lid assembly, then after removal, do not move motor assembly.**

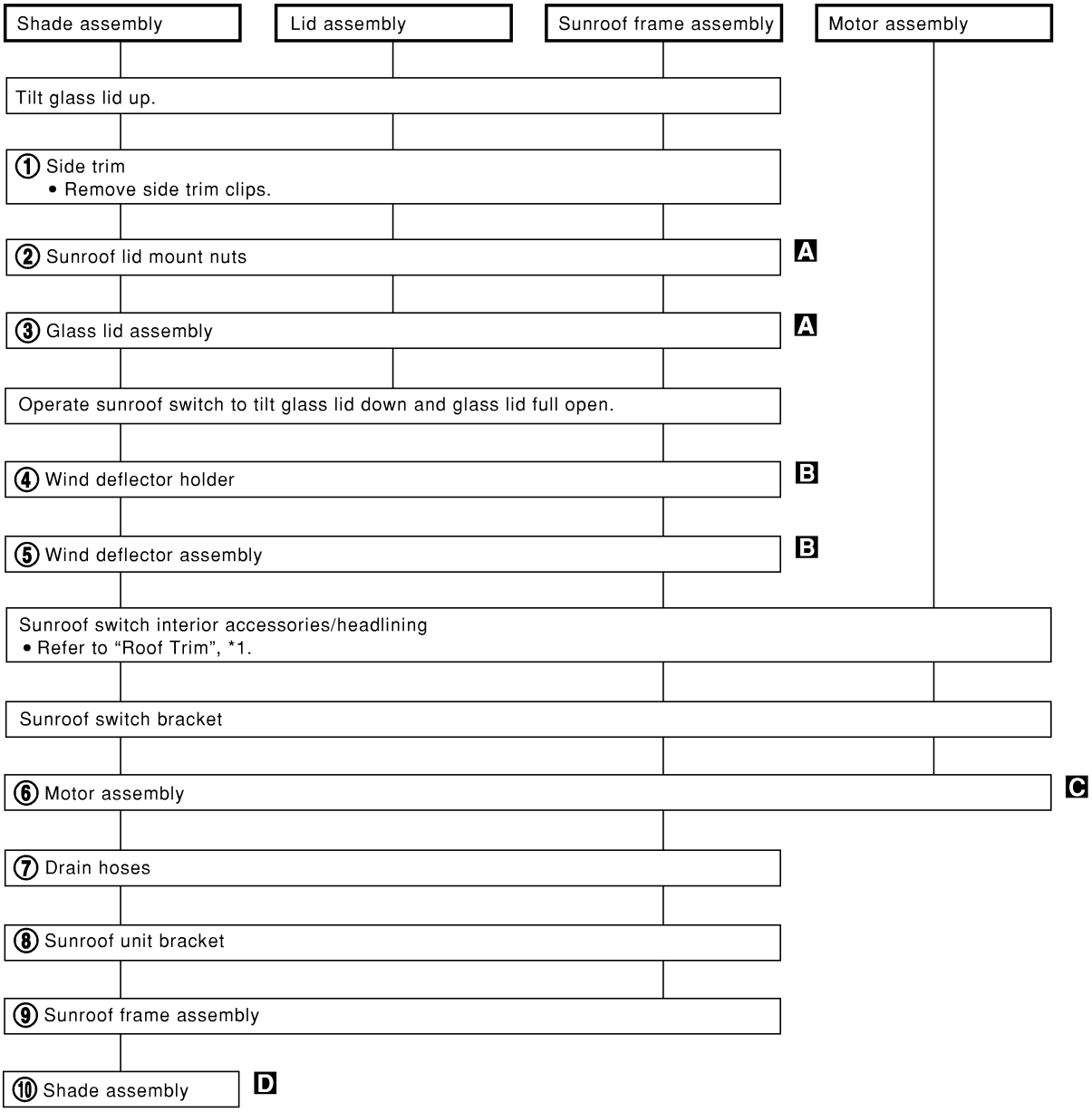

★ For Wiring Diagram, refer to (*2), "POWER SUNROOF" for details.

SBT838

*1 BT-31

*2 EL-107

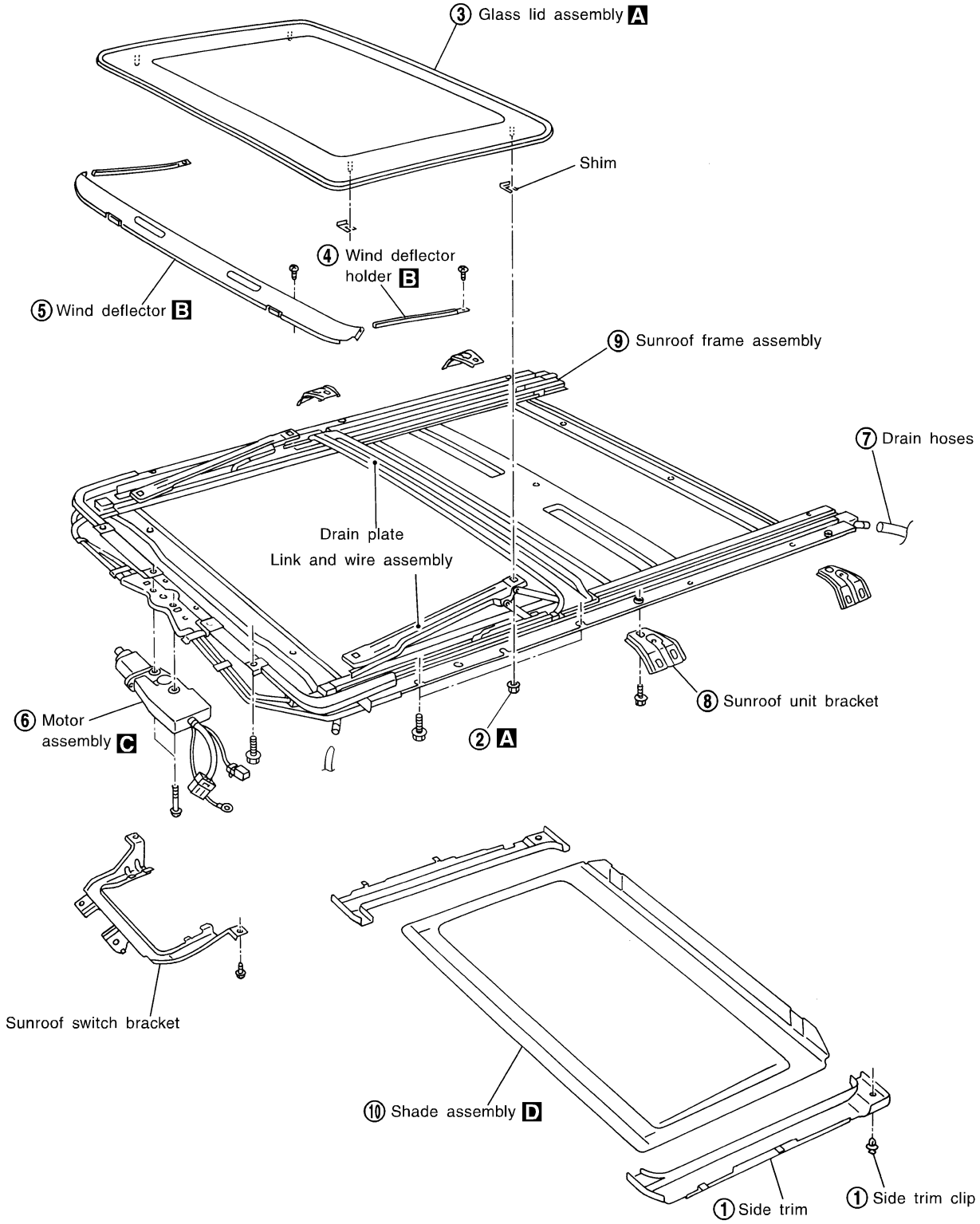
③ Glass lid assembly A
Shim
④ Wind deflector holder B
⑤ Wind deflector B
⑨ Sunroof frame assembly
⑦ Drain hoses
Drain plate
Link and wire assembly
⑧ Sunroof unit bracket
⑥ Motor assembly C
② A
Sunroof switch bracket
⑩ Shade assembly D
① Side trim
① Side trim clip

SBT016A

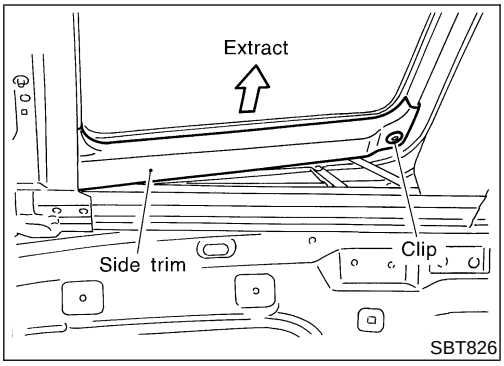

A Record the number of shims placed between glass lid assembly and link and wire assembly. Remove securing nuts and glass lid assembly.

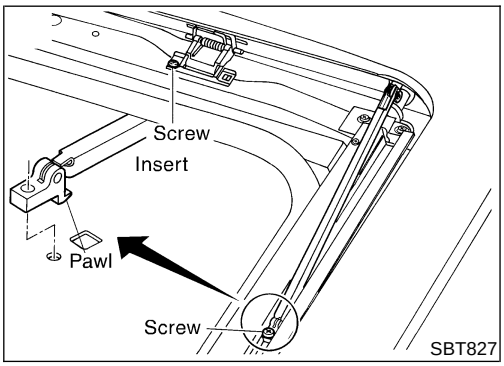

B Remove screws from left and right sides of each wind deflector holder. Extract pawls through rail holes, then remove left and right sides of wind deflector holder. Remove screws from front end of sunroof unit. Extract pawls through frame holes, then remove wind deflector from frame assembly.

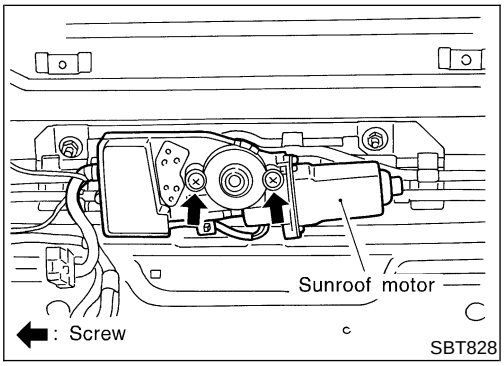

C

CAUTION:

- **Before removing sunroof motor, make sure that sunroof is fully closed.**
- **After removing sunroof motor, never attempt to rotate sunroof motor as a single unit.**

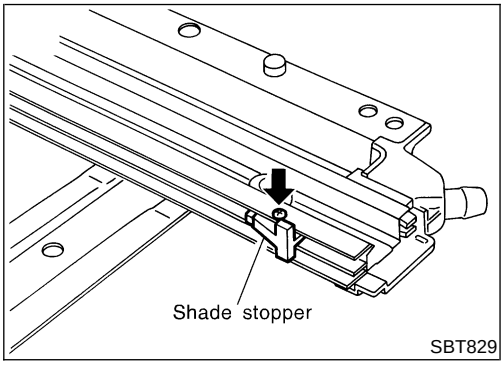

D Remove shade stoppers (2 points) from rear end of sunroof frame assembly. Remove sun shade from rear end of sunroof frame assembly.

Trouble Diagnoses

=NMBT0022

DIAGNOSTIC TABLE

NMBT0022S01

NOTE:
For diagnosing electric malfunction, refer to “ELECTRIC SUNROOF” in EL section.

		Check items (Components)				
		Wind deflector	Adjustment	Drain hoses	Weatherstrip	Link and wire assembly
	Reference page	BT-44	BT-45	BT-46	BT-47	BT-47
Symptom	Excessive wind noise	1	2		3	
	Water leaks		1	2	3	
	Sunroof rattles		1	4	2	3
	Excessive operation noise		1		2	3

The numbers in this table mean checking order.

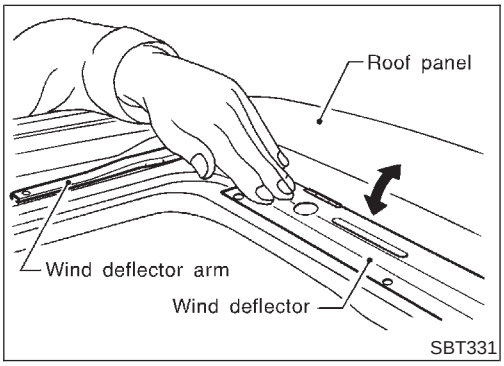

SBT331

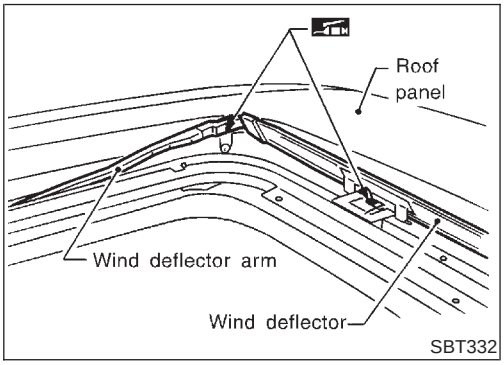

SBT332

WIND DEFLECTOR

NMBT0022S02

1. Open lid.
2. Check visually for proper installation.
3. Check to ensure a proper amount of petroleum jelly has been applied to wind deflector connection points; apply if necessary.
4. Check that wind deflector is properly retracted by hand. If it is not, remove and visually check condition. (Refer to removal procedures, BT-40.) If wind deflector is damaged, replace with new one. If wind deflector is not damaged, re-install properly.

ADJUSTMENT

NMBT0022S03

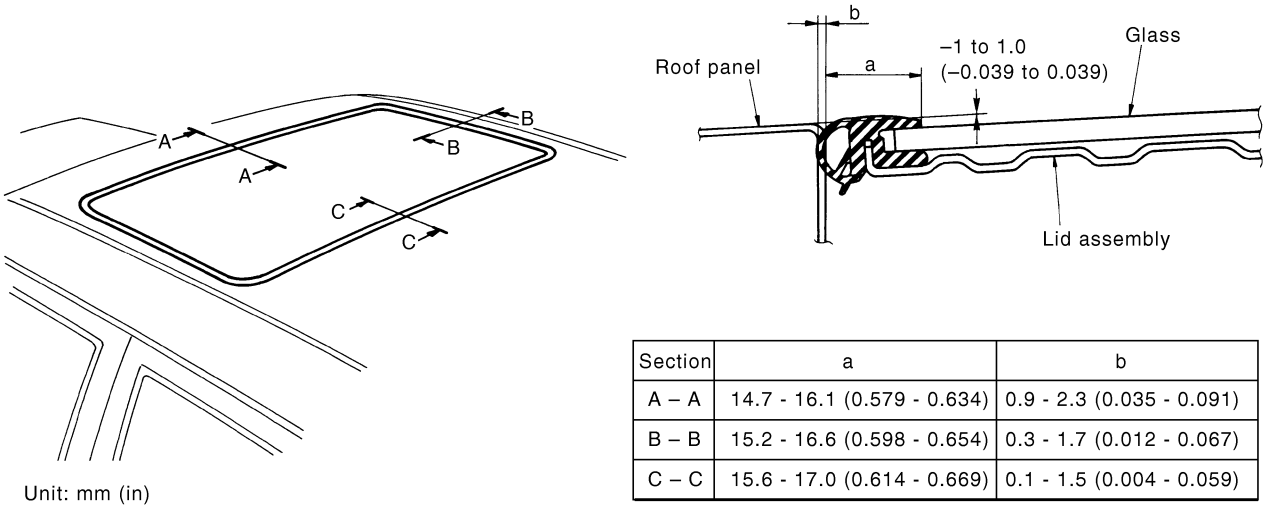

Section	a	b
A – A	14.7 - 16.1 (0.579 - 0.634)	0.9 - 2.3 (0.035 - 0.091)
B – B	15.2 - 16.6 (0.598 - 0.654)	0.3 - 1.7 (0.012 - 0.067)
C – C	15.6 - 17.0 (0.614 - 0.669)	0.1 - 1.5 (0.004 - 0.059)

JBT146A

If any height difference between glass lid and roof is found, check glass lid fit and adjust as follows:

Clearance Adjustment

NMBT0022S0303

Remove side trim and roof trim. Refer to "SIDE AND FLOOR TRIM", BT-26 and "ROOF TRIM", BT-31 for details.

1. After loosening the glass lid assembly attachment nuts, tilt the glass lid assembly downwards.
2. Adjust the glass lid assembly so that the dimensions of sections A – A, B – B and C – C match the figure above.
3. Check that the glass lid assembly operates smoothly.

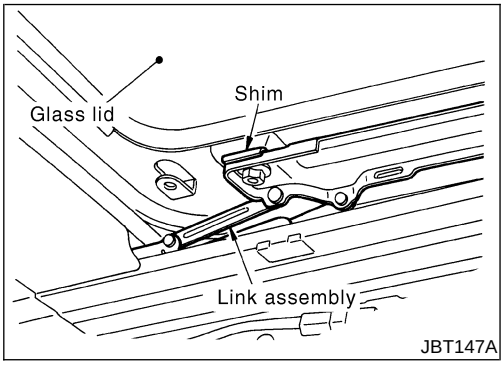

JBT147A

Height Difference Adjustment

NMBT0022S0302

1. Tilt glass lid up and down.
2. Check height differences between roof panel and glass lid to see if they are as "A – A" and "C – C" as shown in the figure above.
3. If necessary, adjust it by using one of following procedures.

- Adjust by adding or removing adjustment shim(s) between glass lid and link assembly.
- If glass lid protrudes above roof panel, add shim(s) or plain washer(s) at sunroof mounting bracket or stud bolt locations to adjust sunroof installation as required.

DRAIN HOSES

NMBT0022S04

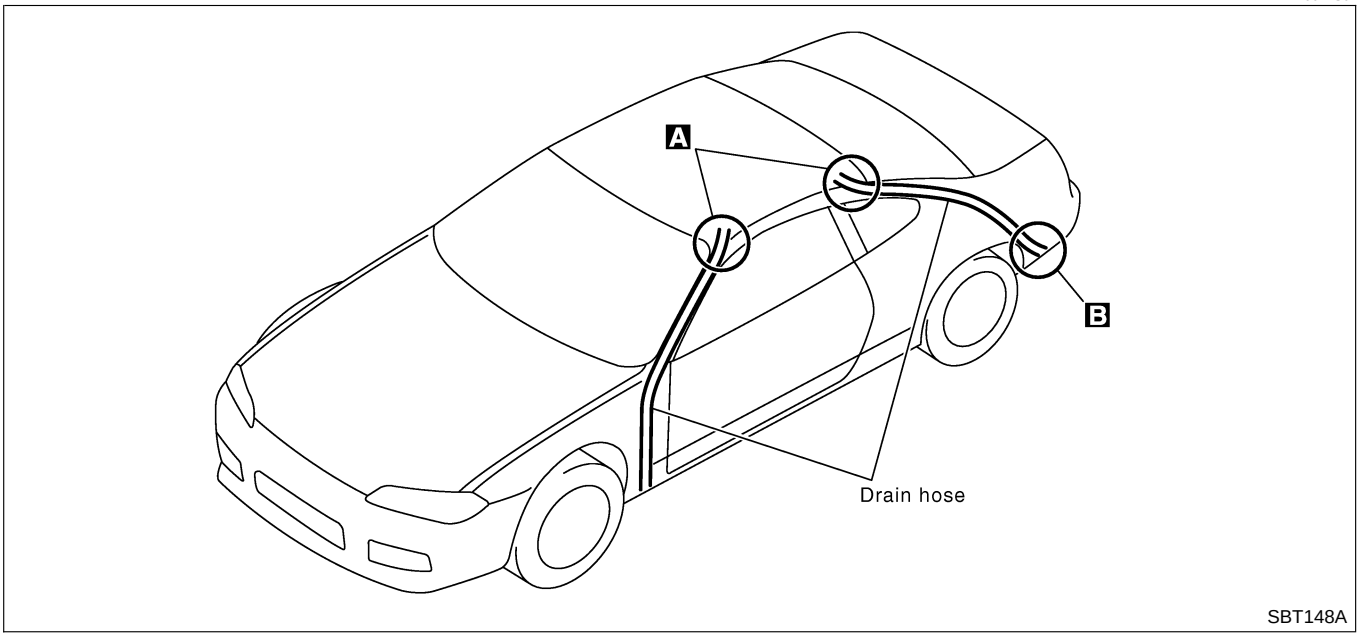

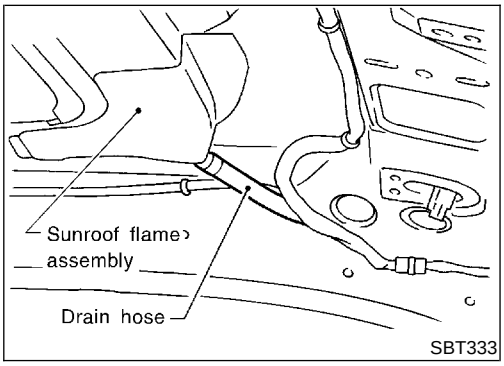

1. Remove headlining to access drain hose connections. (Refer to "ROOF TRIM", BT-31, for detail.)
2. Check visually for proper connections, damage or deterioration. **A** (The figure shows only the front side.)

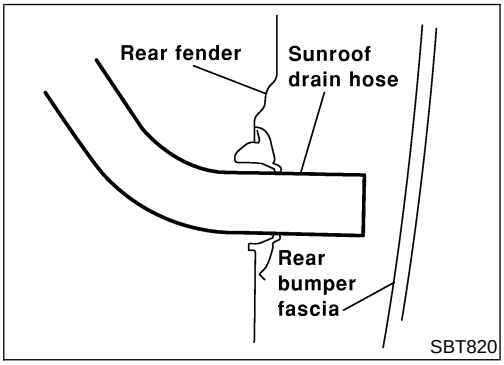

3. If leakage occurs around luggage room, remove luggage room side trim and check connecting area. Check for proper connection, damage or tear. **B**
4. Remove drain hoses and check visually for any damage, cracks, or deterioration.
5. Pour water into drain hoses and find damaged portion.

- If any damaged portion is found at each step, replace the damaged part.

WEATHERSTRIP

=NMBT0022S05

- In the case of leakage around glass lid, close glass lid and pour water over glass lid to find damaged or gap portion.

1. Remove glass lid assembly. (Refer to removal procedures, BT-40, for details.)
2. Visually check weatherstrip for proper installation. If a gap exists between glass lid and weatherstrip, check for sufficient amount of butyl seal. If required, remove weatherstrip and apply butyl seal.
   Refer to "ADJUSTMENT", BT-45, for details.
3. Check weatherstrip visually for any damage, deterioration, or flattening.

- If any damage is found, replace weatherstrip.

CAUTION:

Do not remove weatherstrip except when replacing, or filling up butyl seal.

LINK AND WIRE ASSEMBLY

NMBT0022S06

NOTE:

Before replacing a suspect part, carefully ensure it is the source of noise being experienced.

1. Check link to determine if coating film has peeled off to such an extent that substrate is visible. Check also to determine if link is the source of noise. If it is, replace it.
2. Visually check to determine if a sufficient amount of petroleum jelly has been applied to wire or rail groove. If not, add petroleum jelly as required.
3. Check wire for any damage or deterioration. If any damage is found, remove rear guide (refer to removal procedures, BT-40, for details), then replace wire.

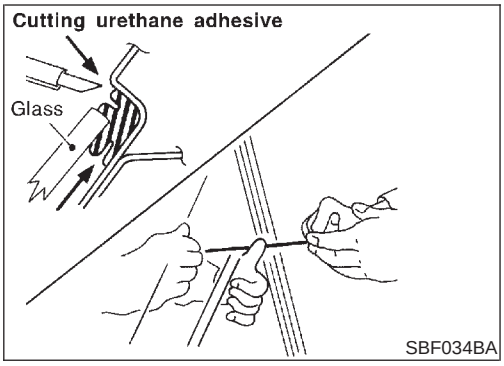

Removal and Installation

NMBT0023

REMOVAL

NMBT0023S01

After removing moldings, remove glass using piano wire or power cutting tool and an inflatable pump bag.

WARNING:

When cutting the glass from the vehicle, always wear safety glasses and heavy gloves to help prevent glass splinters from entering your eyes or cutting your hands.

CAUTION:

- **Be careful not to scratch the glass when removing.**
- **Do not set or stand the glass on its edge. Small chips may develop into cracks.**

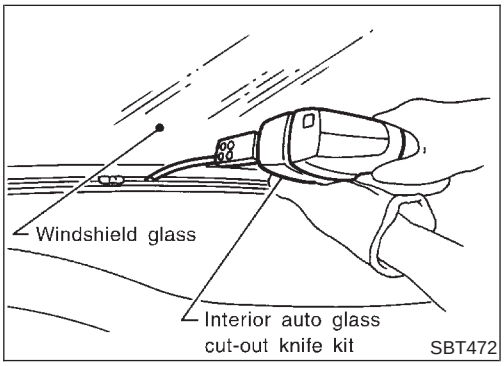

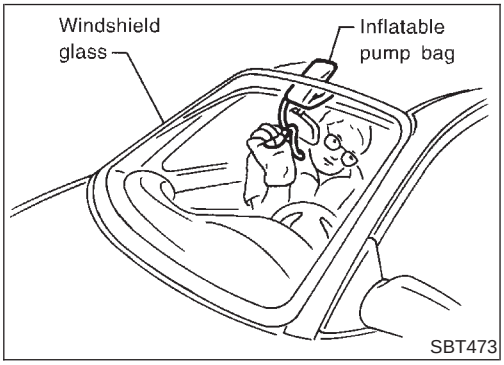

INSTALLATION

NMBT0023S02

- **Use a genuine Nissan Urethane Adhesive Kit or equivalent and follow the instructions furnished with it.**
- **While the urethane adhesive is curing, open a door window. This will prevent the glass from being forced out by passenger compartment air pressure when a door is closed.**
- **The molding must be installed securely so that it is in position and leaves no gap.**
- **Inform the customer that the vehicle should remain stationary until the urethane adhesive has completely cured (preferably 24 hours). Curing time varies with temperature and humidity.**

WARNING:

- **Keep heat and open flames away as primers and adhesive are flammable.**
- **The materials contained in the kit are harmful if swallowed, and may irritate skin and eyes. Avoid contact with the skin and eyes.**
- **Use in an open, well ventilated location. Avoid breathing the vapors. They can be harmful if inhaled. If affected by vapor inhalation, immediately move to an area with fresh air.**
- **Driving the vehicle before the urethane adhesive has completely cured may affect the performance of the windshield in case of an accident.**

CAUTION:

- **Do not use an adhesive which is past its usable term. Shelf life of this product is limited to six months after the date of manufacture. Carefully adhere to the expiration or manufacture date printed on the box.**
- **Keep primers and adhesive in a cool, dry place. Ideally, they should be stored in a refrigerator.**

- **Do not leave primers or adhesive cartridge unattended with their caps open or off.**
- **The vehicle should not be driven for at least 24 hours or until the urethane adhesive has completely cured. Curing time varies depending on temperature and humidities. The curing time will increase under higher temperatures and lower humidities.**

WINDSHIELD AND WINDOWS

NMBT0023S03

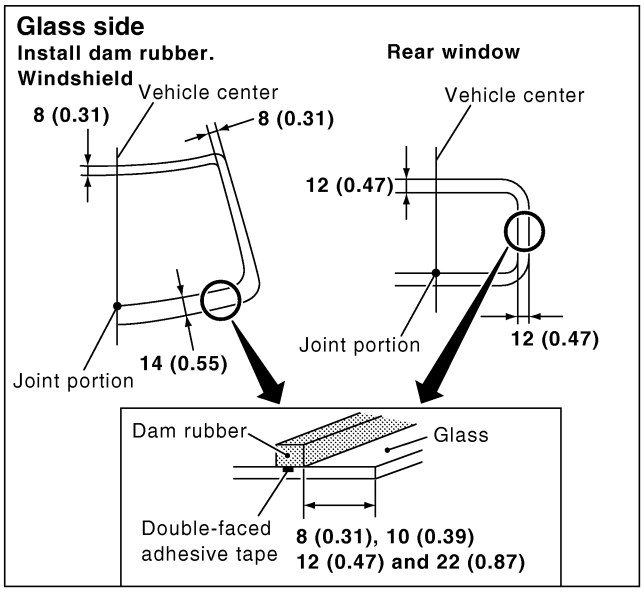

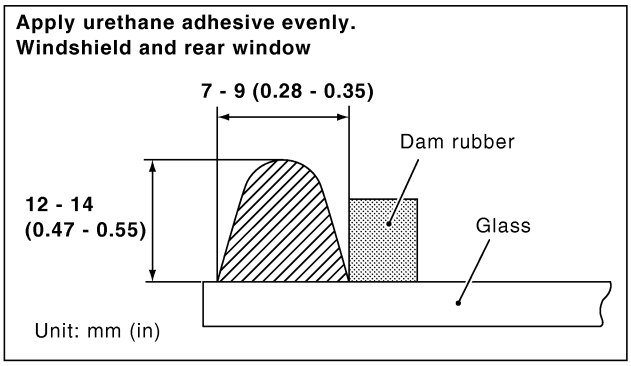

SBT149A

SEC. 720•797

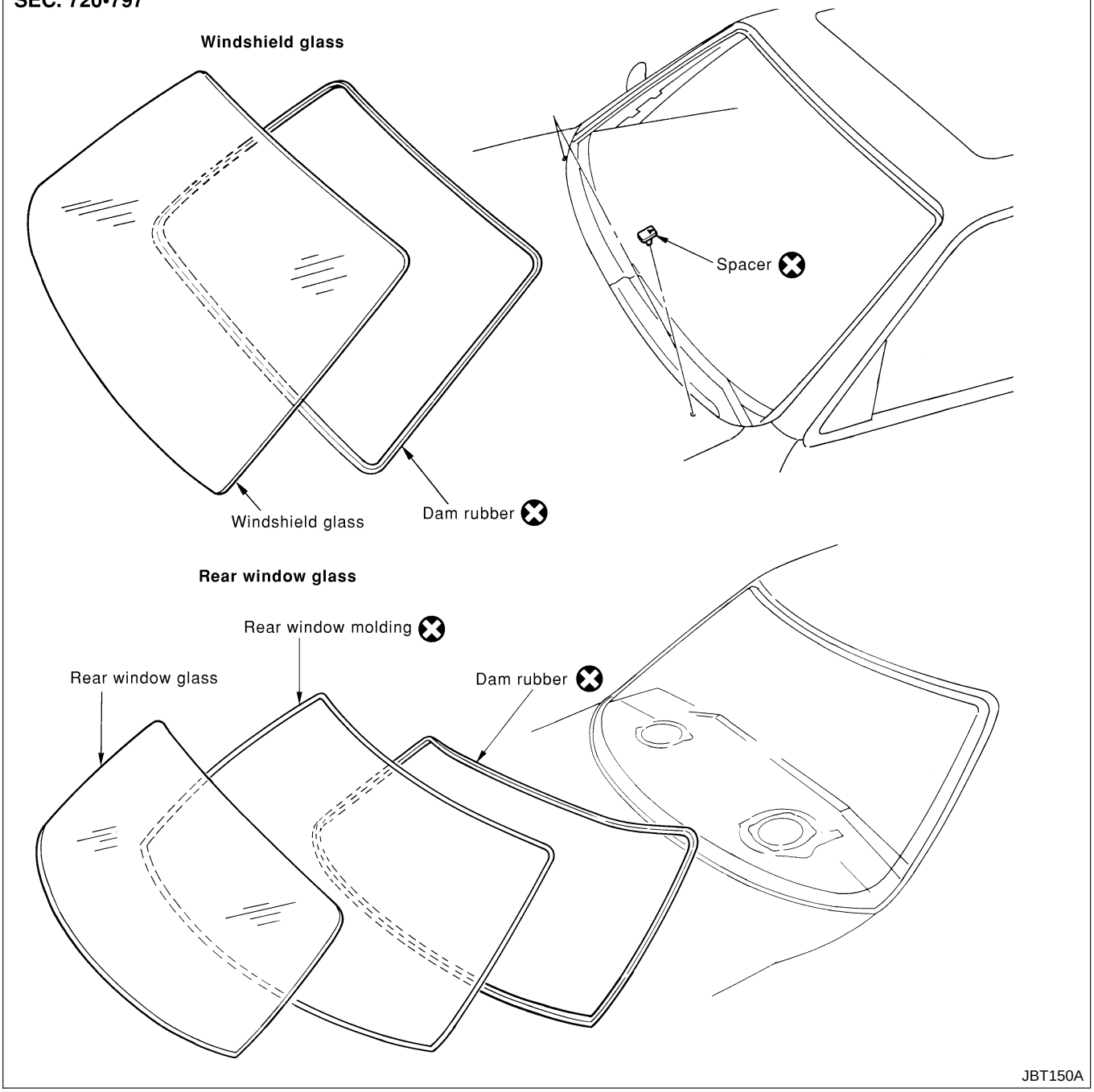
Windshield glass
Spacer
Windshield glass
Dam rubber
Rear window glass
Rear window molding
Rear window glass
Dam rubber
JBT150A

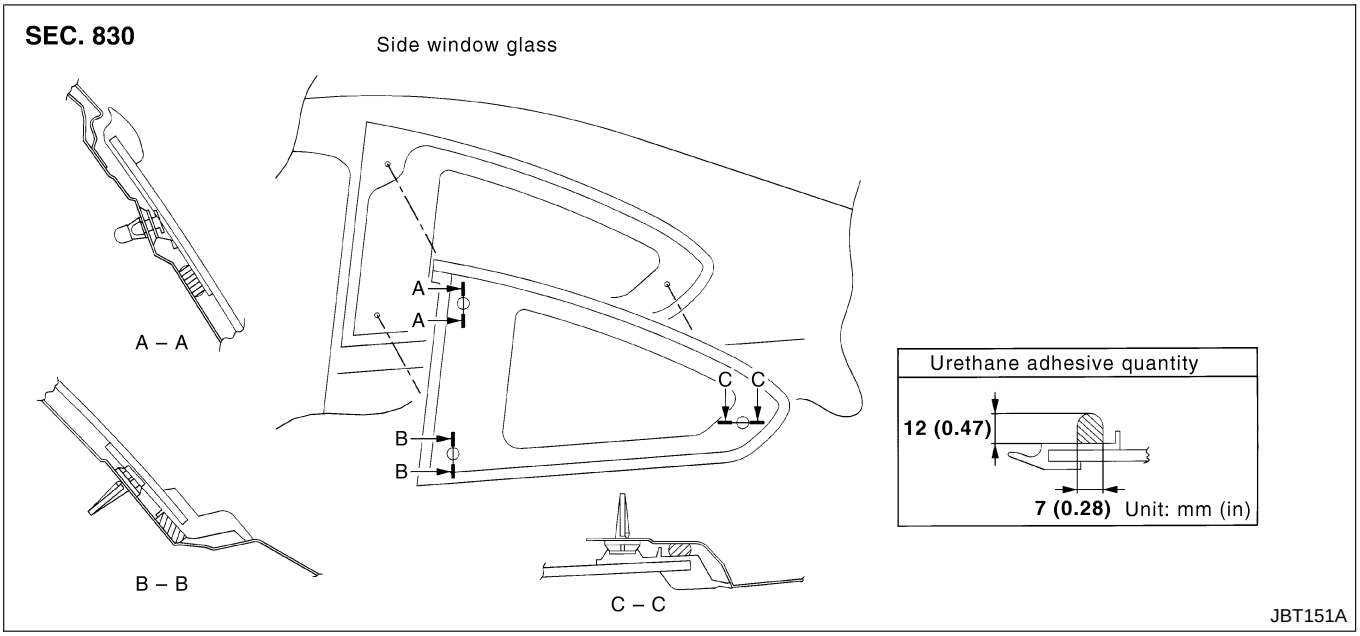

Repairing Water Leaks for Windshield and Windows

NMBT0023S0301

Leaks can be repaired without removing and reinstalling glass.

If water is leaking between the urethane adhesive material and body or glass, determine the extent of leakage. This can be done by applying water to the windshield area while pushing glass outward.

To stop the leak, apply primer (if necessary) and then urethane adhesive to the leak point.

Removal and Installation

NMBT0024

CAUTION:
Be careful not to scratch door rearview mirror body.

★ For Wiring Diagram, refer to EL-110, "DOOR MIRROR" for details.

1. Remove front corner of door inner cover.
2. Disconnect door mirror harness connector.
3. Remove nuts securing door mirror assembly.
4. Remove the mirror glass. Do not insert flat-bladed screwdriver too far.

SEC. 800 963

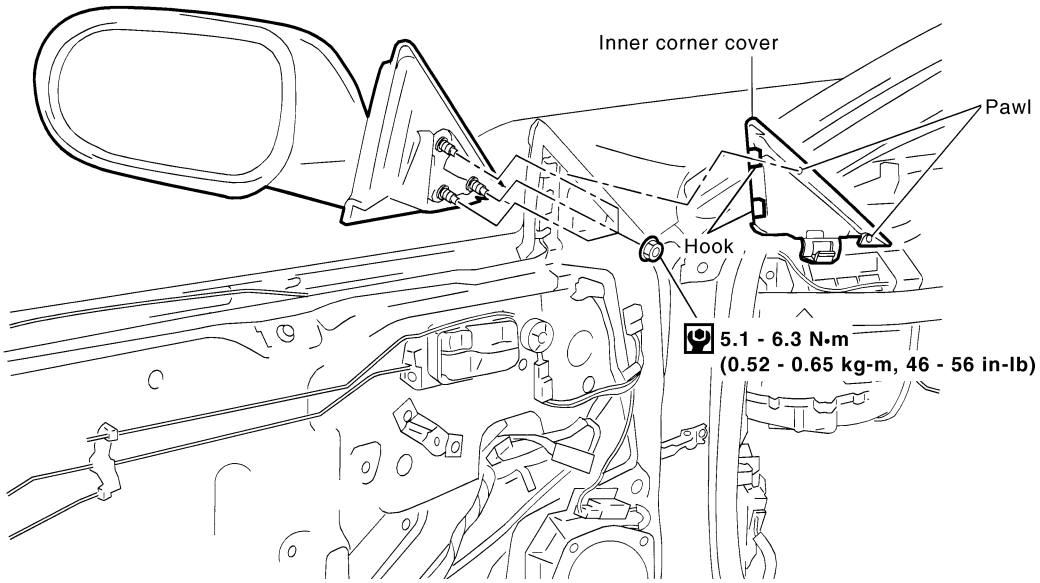

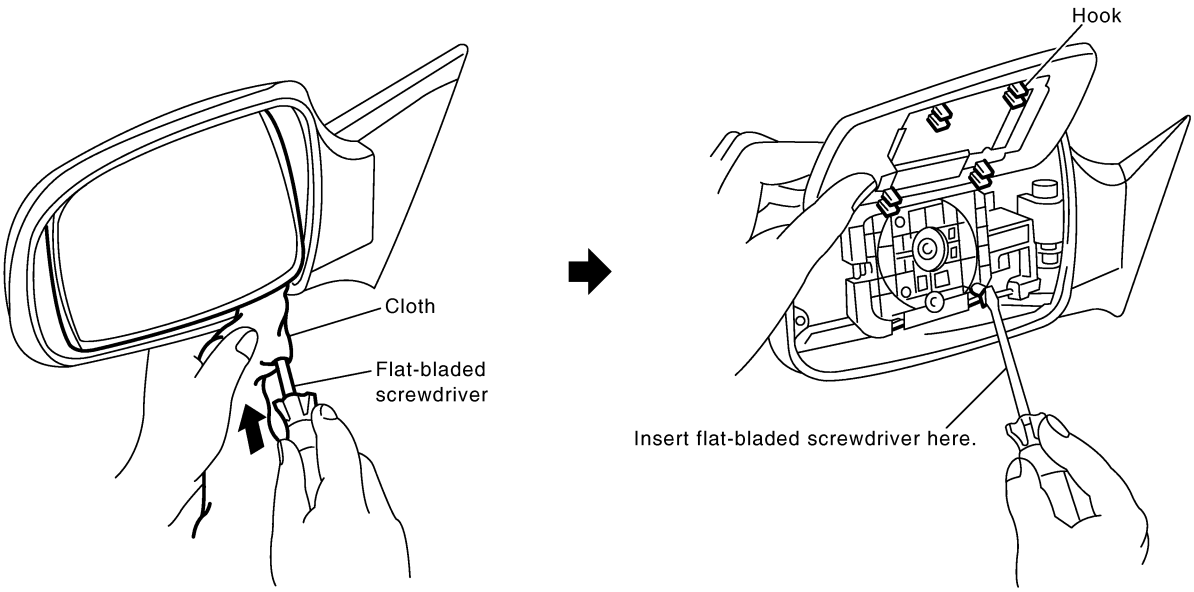

JBT152A

Alignment

NMBT0026

- All dimensions indicated in figures are actual ones.
- When using a tracking gauge, adjust both pointers to equal length. Then check the pointers and gauge itself to make sure there is no free play.
- When a measuring tape is used, check to be sure there is no elongation, twisting or bending.
- Measurements should be taken at the center of the mounting holes.
- An asterisk (*) following the value at the measuring point indicates that the measuring point on the other side is symmetrically the same value.
- The coordinates of the measurement points are the distances measured from the standard line of “X”, “Y” and “Z”.

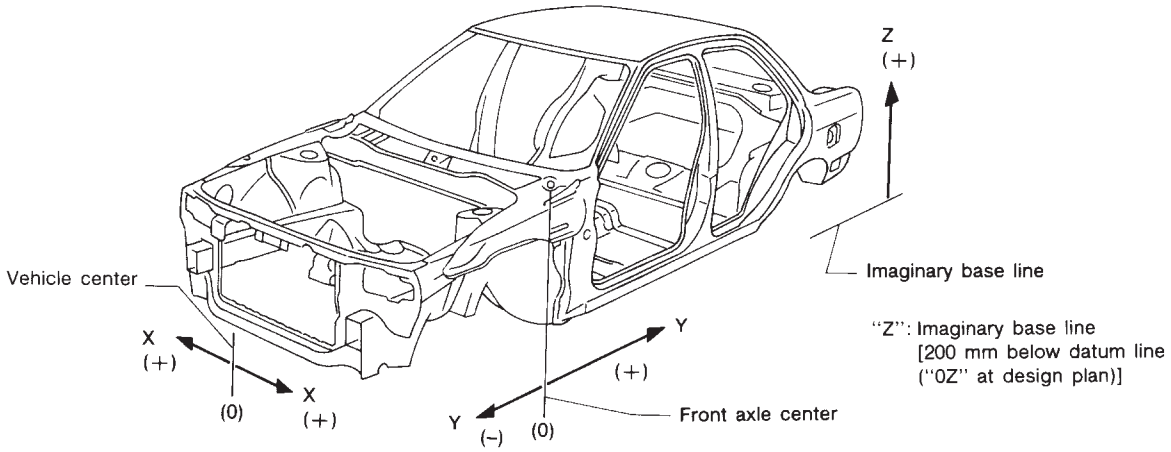

SBF874GB

ENGINE COMPARTMENT

Measurement

NMBT0026S01

NMBT0026S0101

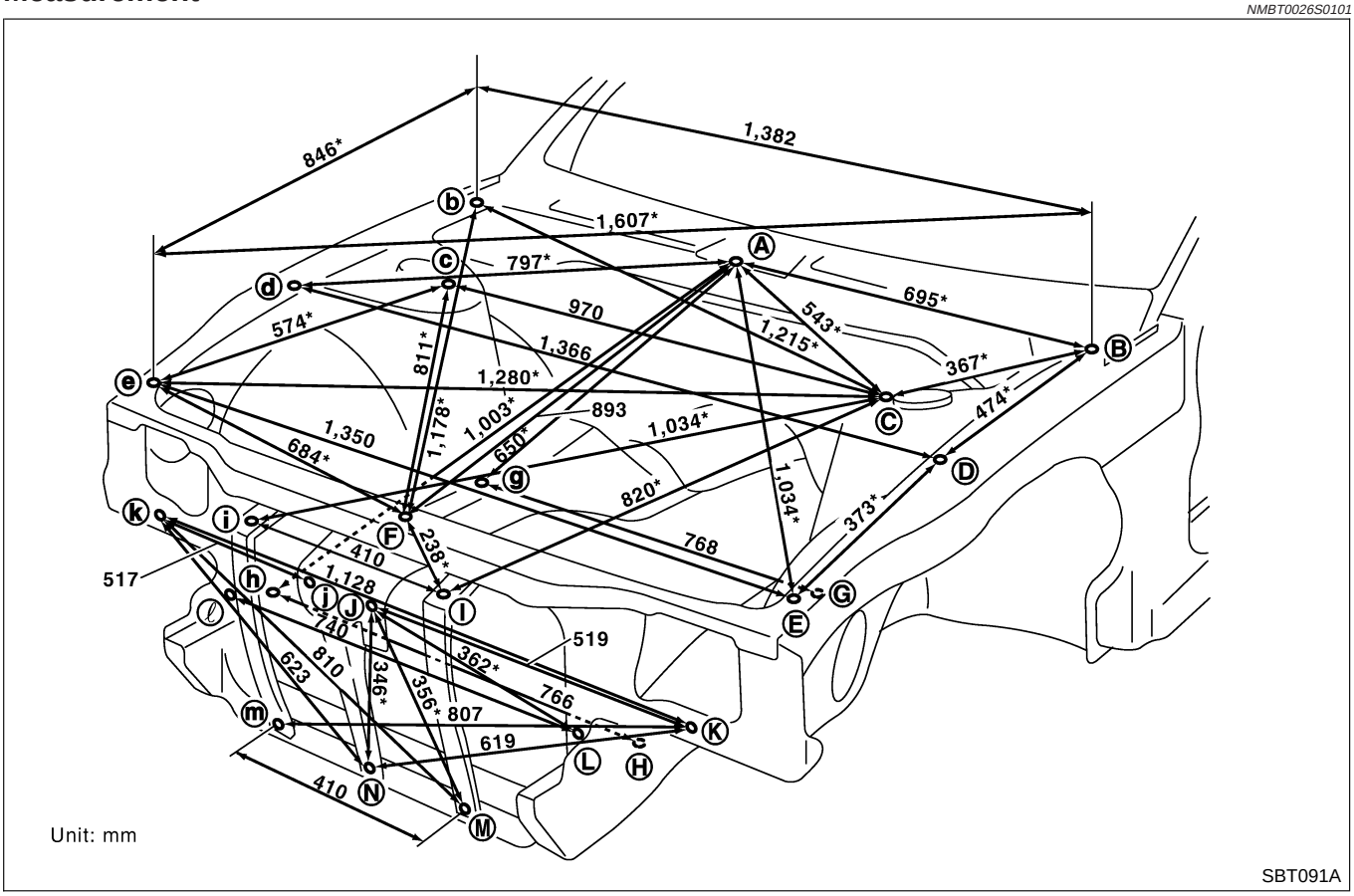

Measurement Points

NMBT0026S0102

Ⓐ : Cowl top hole center of center positioning mark (5 dia.)

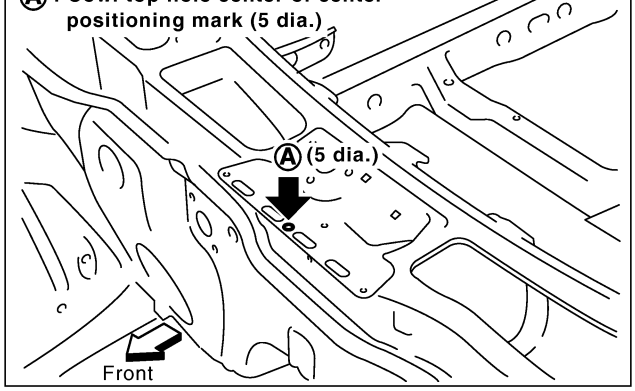

Ⓑ,ⓑ,Ⓓ,ⓓ : Fender installing hole center (7 dia.)
Ⓒ,ⓒ : Strut installing hole center (11 dia.)

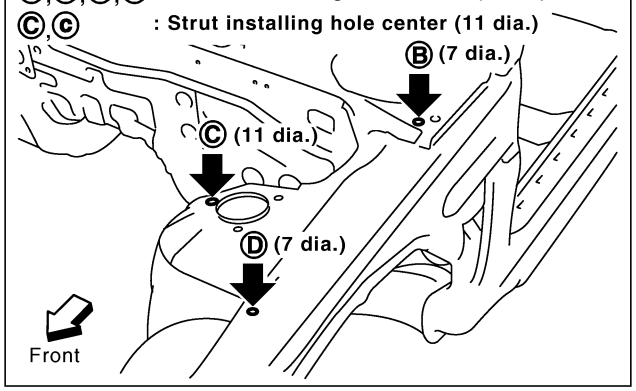

Ⓕ : Upper radiator core support hole center of center positioning mark (5 dia.)
Ⓘ,ⓘ : Hood bumper rubber installing hole center (8 dia.)
Ⓙ,ⓙ : Hood lock installing hole center (9 dia.)

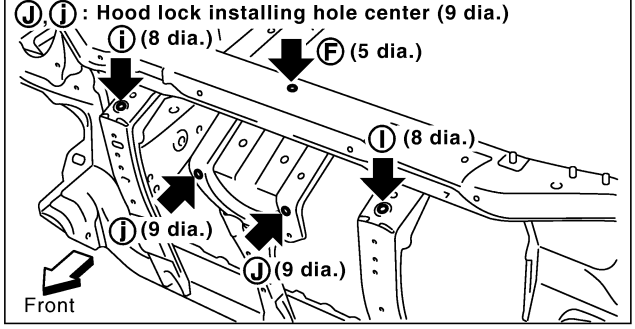

Ⓔ,ⓔ : Fender installing hole center (7 dia.)
Ⓚ,ⓚ : Side radiator core support hole center (8 dia.)
Ⓛ,ⓛ : Lower radiator core conner hole center (8 dia.)

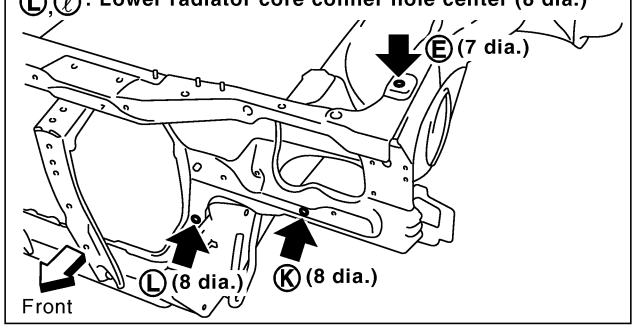

Ⓜ,ⓜ : Headlamp stay installing hole center (7 dia.)
Ⓝ : Hood lock stay hole center (11 dia.)

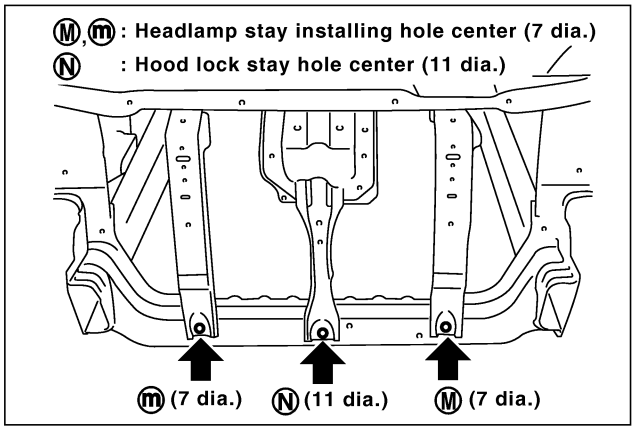

Ⓖ,Ⓗ : Front side member LH side hole center
(Ⓖ : 13 dia., Ⓗ : 10 dia.)

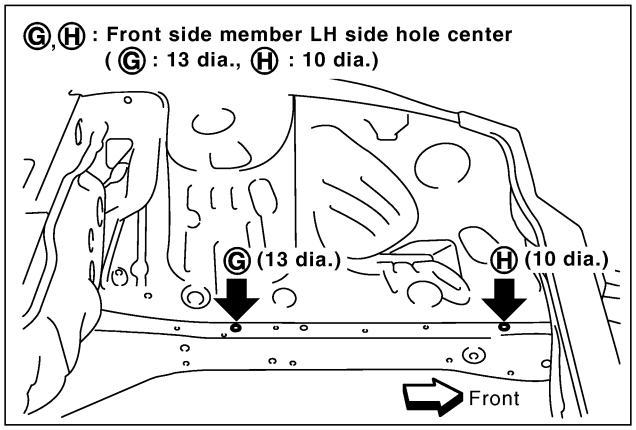

ⓖ,ⓗ : Front side member RH side hole center
(ⓖ : 13 dia., ⓗ : 10 dia.)

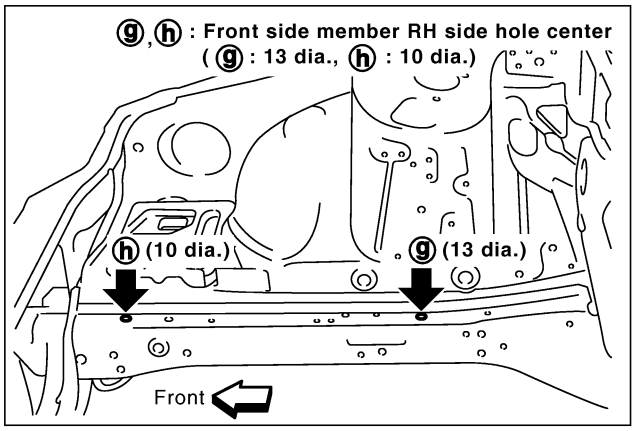

SBT092A

UNDERBODY
Measurement

NMBT0026S02

NMBT0026S0201

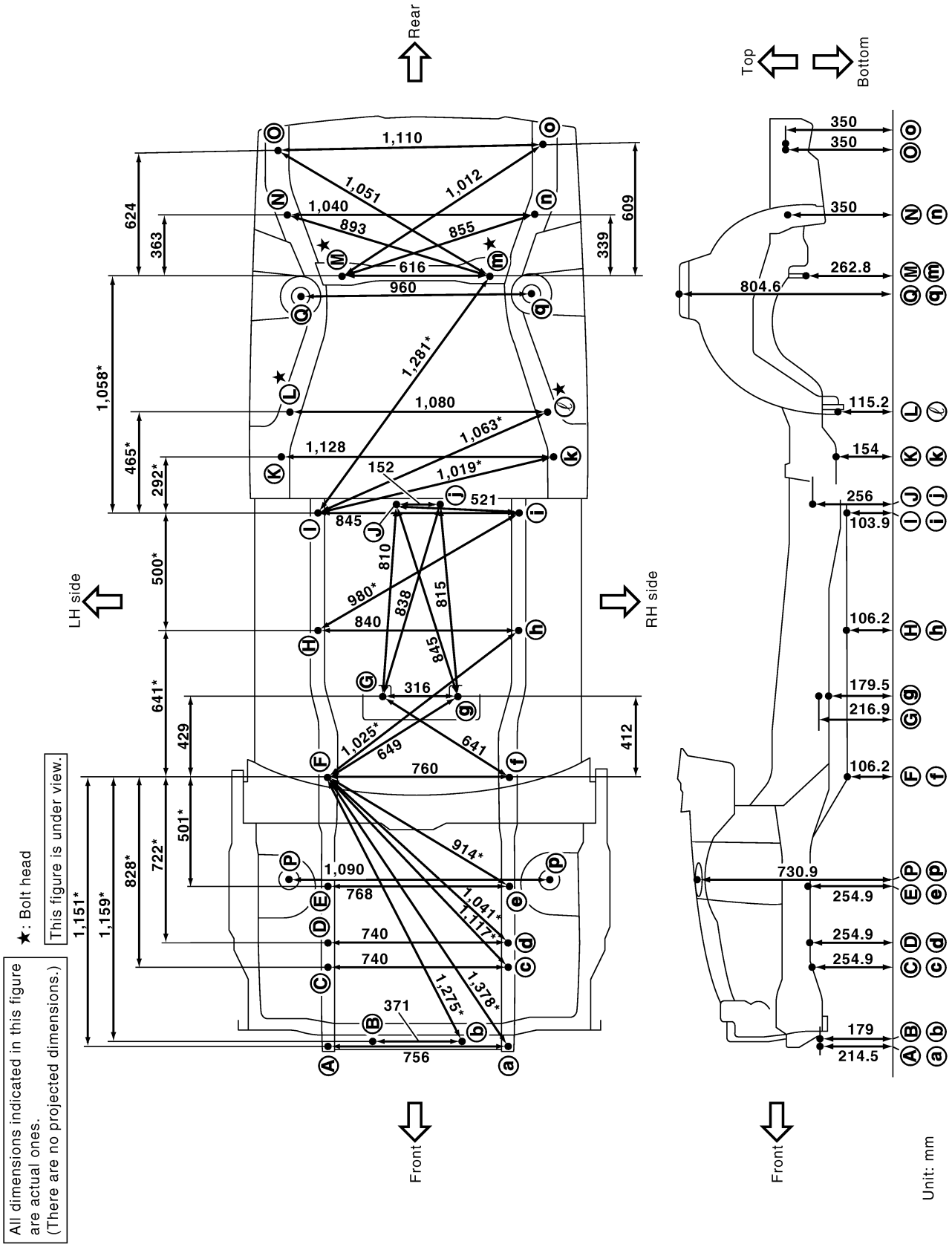

★: Bolt head

This figure is under view.

All dimensions indicated in this figure are actual ones. (There are no projected dimensions.)

SBT093A

Measurement Points

NMBT0026S0202

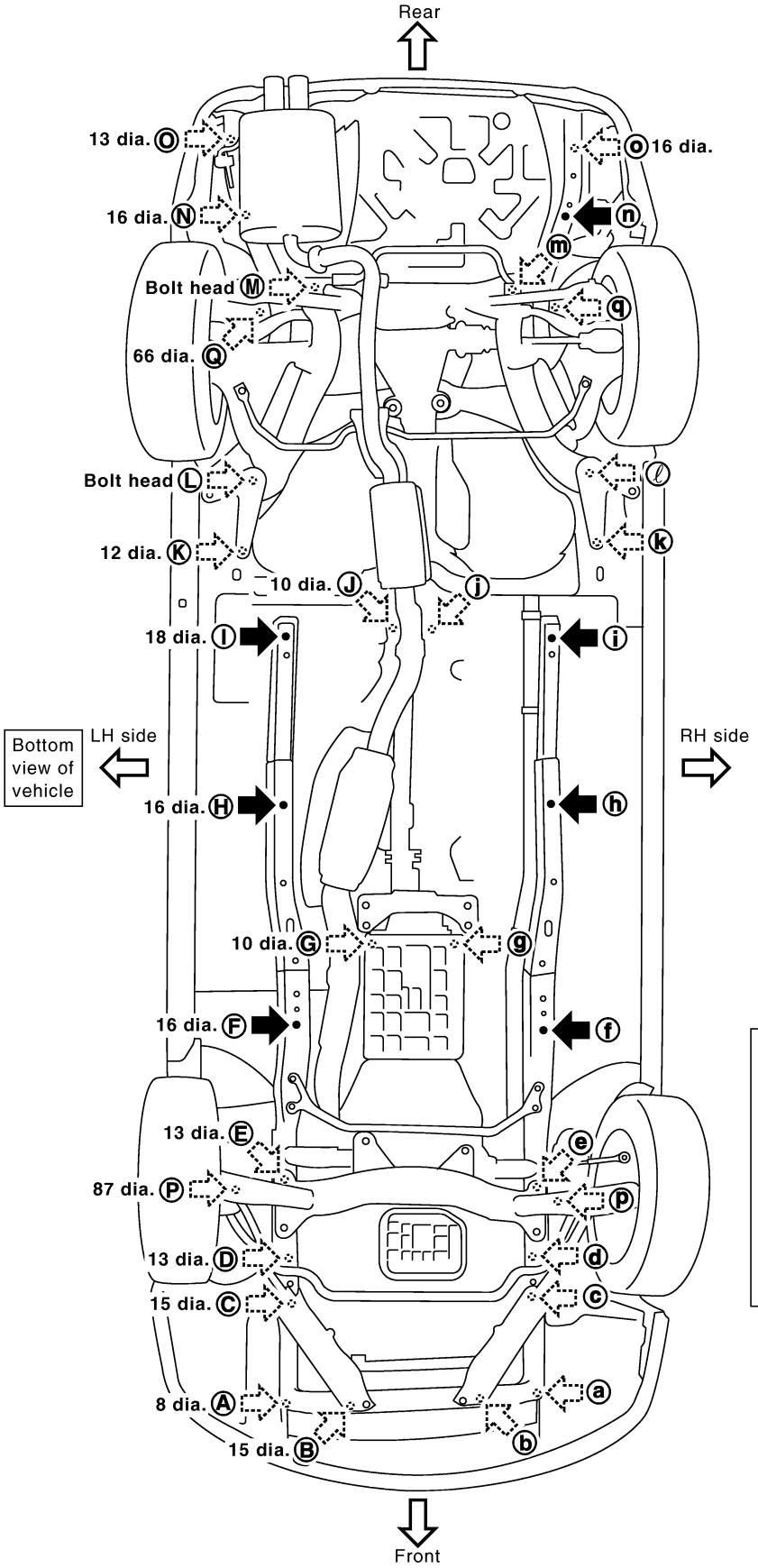

Coordinates

Ⓐ,ⓐ X: 378 Y: –635.5 Z: 214.5	Ⓘ,ⓘ X: 422.5 Y: 1,650 Z: 103.9
Ⓑ,ⓑ X: 185.3 Y: –630 Z: 179	Ⓙ,ⓙ X: 76 Y: 1,660 Z: 256
Ⓒ,ⓒ X: 370 Y: –304 Z: 254.9	Ⓚ,ⓚ X: 564 Y: 1,900 Z: 154
Ⓓ,ⓓ X: 370 Y: –196.5 Z: 254.9	Ⓛ,ⓛ X: 540 Y: 2,100 Z: 115.2
Ⓔ,ⓔ X: 384.2 Y: 32 Z: 254.9	Ⓜ,ⓜ X: 308 Y: 2,690 Z: 262.8
Ⓕ,ⓕ X: 380 Y: 510 Z: 106.2	Ⓝ X: 540 Y: 2,955 Z: 350
Ⓖ X: 149 Y: 854 Z: 216.9	ⓝ X: –500 Y: 2,955 Z: 350
ⓖ X: –165 Y: 854 Z: 179.5	Ⓞ X: 580 Y: 3,245 Z: 350
Ⓗ,ⓗ X: 420 Y: 1,150 Z: 106.2	ⓞ X: –530 Y: 3,250 Z: 350

Front and rear strut tower centers
Coordinates:

Ⓟ,ⓟ
X: 545.1
Y: 63.6
Z: 730.9

Ⓠ,ⓠ
X: 479.8
Y: 2,608
Z: 804.6

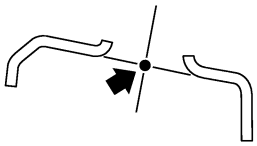

Front: Ⓟ,ⓟ 87 dia.
Rear: Ⓠ,ⓠ 66 dia.

SBT094A

NOTES