2018 Journey

OWNER'S MANUAL

VEHICLES SOLD IN CANADA

With respect to any Vehicles Sold in Canada, the name FCA US LLC shall be deemed to be deleted and the name FCA Canada Inc. used in substitution therefore.

DRIVING AND ALCOHOL

Drunken driving is one of the most frequent causes of accidents.

Your driving ability can be seriously impaired with blood alcohol levels far below the legal minimum. If you are drinking, don't drive. Ride with a designated non-drinking driver, call a cab, a friend, or use public transportation.

WARNING!
Driving after drinking can lead to an accident. Your perceptions are less sharp, your reflexes are slower, and your judgment is impaired when you have been drinking. Never drink and then drive.

This manual illustrates and describes the operation of features and equipment that are either standard or optional on this vehicle. This manual may also include a description of features and equipment that are no longer available or were not ordered on this vehicle. Please disregard any features and equipment described in this manual that are not on this vehicle.

FCA US LLC reserves the right to make changes in design and specifications, and/or make additions to or improvements to its products without imposing any obligation upon itself to install them on products previously manufactured.

Copyright © 2017 FCA US LLC

TABLE OF CONTENTS

SECTION		PAGE
1	INTRODUCTION	3
2	GRAPHICAL TABLE OF CONTENTS	7
3	GETTING TO KNOW YOUR VEHICLE	13
4	GETTING TO KNOW YOUR INSTRUMENT PANEL	135
5	SAFETY	159
6	STARTING AND OPERATING	231
7	IN CASE OF EMERGENCY	279
8	SERVICING AND MAINTENANCE	311
9	TECHNICAL SPECIFICATIONS	371
10	MULTIMEDIA	385
11	CUSTOMER ASSISTANCE	493
12	INDEX	499

INTRODUCTION

CONTENTS

■ INTRODUCTION 4
■ HOW TO USE THIS MANUAL 4
□ Essential Information 4
□ Symbols 5
■ WARNINGS AND CAUTIONS 6
■ VEHICLE MODIFICATIONS/ALTERATIONS 6

INTRODUCTION

Dear Customer,

Congratulations on selecting your new vehicle. Be assured that it represents precision workmanship, distinctive styling, and high quality. This Owner's Manual has been prepared with the assistance of service and engineering specialists to acquaint you with the operation and maintenance of your vehicle. It is supplemented by Warranty Information, and customer oriented documents. In the attached Warranty Booklet, you will find a description of the services that FCA offers to its customers, the Warranty Certificate and the details of the terms and conditions for maintaining its validity. Please take the time to read all of these publications carefully before driving your vehicle for the first time. Following the instructions, recommendations, tips, and important warnings in this manual will help assure safe and enjoyable operation of your vehicle. Be sure you are familiar with all vehicle controls, particularly those used for braking, steering, transmission, and transfer case shifting (if equipped). Learn how your vehicle handles on different road surfaces. Your driving skills will improve with experience.

This Owner's Manual describes all versions of this vehicle. Options and equipment dedicated to specific markets or versions are not expressly indicated in the text. Therefore, you should only consider the information which is related to the trim level, engine, and version that you have purchased. Any content introduced throughout the Owner's Information, that may or may not be applicable to your vehicle, will be identified with the wording "If Equipped". All data contained in this publication are intended to help you use your vehicle in the best possible way. FCA aims at a constant improvement of the vehicles produced. For this reason, it reserves the right to make changes to the model described for technical and/or commercial reasons. For further information, contact an authorized dealer.

NOTE: After reviewing the Owner's Information, it should be stored in the vehicle for convenient referencing, and remain with the vehicle when sold.

When it comes to service, remember that your authorized dealer knows your vehicle best, has factory-trained technicians and genuine MOPAR® parts, and cares about your satisfaction.

HOW TO USE THIS MANUAL

Essential Information

Consult the Table of Contents to determine which section contains the information you desire.

Since the specification of your vehicle depends on the items of equipment ordered, certain descriptions and illustrations may differ from your vehicle's equipment.

The detailed index at the back of this Owner's Manual contains a complete listing of all subjects.

Symbols

Consult the following table for a description of the symbols that may be used on your vehicle or throughout this Owner's Manual:

WARNINGS AND CAUTIONS

This Owner's Manual contains **WARNINGS** against operating procedures that could result in a collision, bodily injury and/or death. It also contains **CAUTIONS** against procedures that could result in damage to your vehicle. If you do not read this entire Owner's Manual, you may miss important information. Observe all Warnings and Cautions.

VEHICLE MODIFICATIONS/ALTERATIONS

WARNING!
Any modifications or alterations to this vehicle could seriously affect its roadworthiness and safety and may lead to a collision resulting in serious injury or death.

GRAPHICAL TABLE OF CONTENTS

CONTENTS

- FRONT VIEW 8
- REAR VIEW 9
- INSTRUMENT PANEL 10
- INTERIOR 11

FRONT VIEW

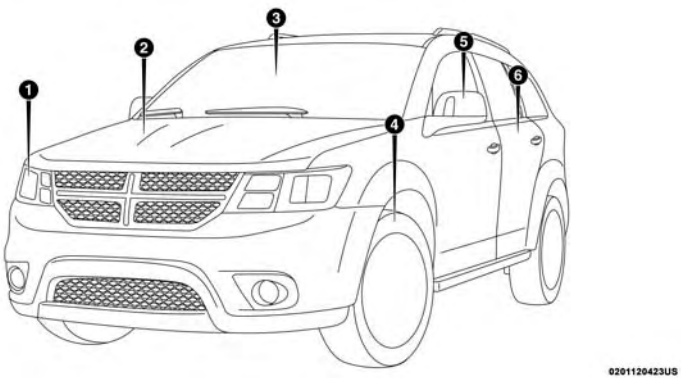

Front View

1 — Headlights
2 — Hood/Engine Compartment
3 — Windshield
4 — Wheels/Tires
5 — Exterior Mirrors
6 — Doors

REAR VIEW

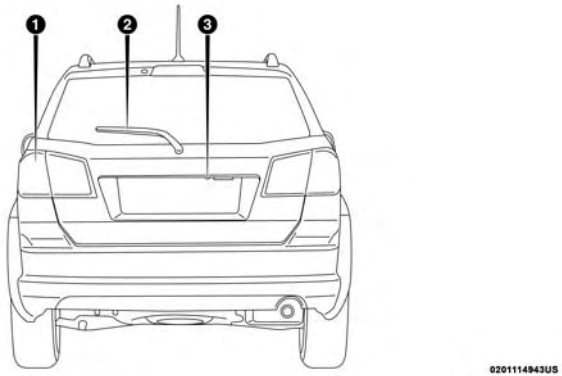

Rear View

1 — Rear Lights
2 — Rear Windshield Wiper
3 — Liftgate

INSTRUMENT PANEL

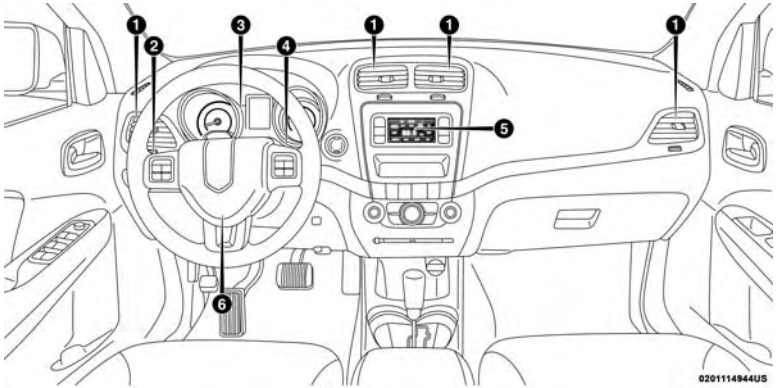

Instrument Panel

1 — Air Vents
2 — Multifunction Lever (Behind Steering Wheel)
3 — Instrument Cluster
4 — Windshield Wiper Lever (Behind Steering Wheel)
5 — Radio
6 — Steering Wheel

INTERIOR

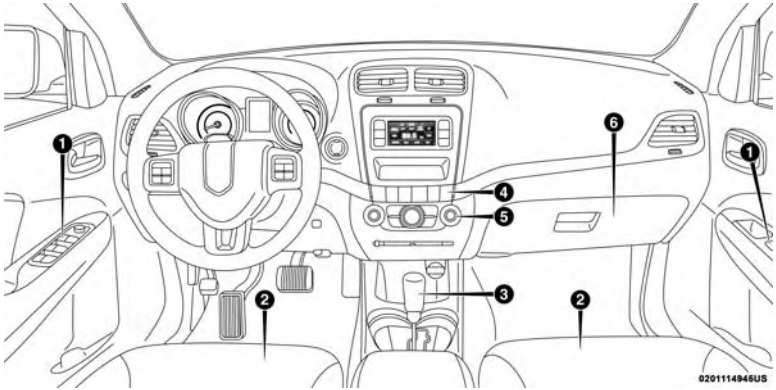

Interior

1 — Door Locks/Window Switches
2 — Seats
3 — Gear Selector
4 — Switch Panel
5 — Climate Controls
6 — Glove Compartment

GETTING TO KNOW YOUR VEHICLE

CONTENTS

■ KEYS 17
- □ Key Fob 17

■ IGNITION SWITCH 21
- □ Keyless Push Button Ignition 21
- □ Ignition Or Accessory On Message 23

■ REMOTE START — IF EQUIPPED 24
- □ How To Use Remote Start. 24
- □ Remote Start Abort Message 25
- □ To Enter Remote Start Mode 25
- □ To Exit Remote Start Mode Without Driving The Vehicle 26
- □ To Exit Remote Start Mode And Drive The Vehicle 26
- □ Remote Start Comfort Systems — If Equipped . . .26
- □ General Information 26

■ SENTRY KEY 27
- □ Customer Key Programming 27
- □ Replacement Keys 28
- □ General Information 28

■ VEHICLE SECURITY ALARM — IF EQUIPPED . . .28
- □ To Arm The System 29
- □ To Disarm The System 29
- □ Rearming Of The System 30
- □ Security System Manual Override 30
- □ Tamper Alert. 30

■ DOORS 30
- □ Manual Door Locks 30
- □ Power Door Locks 32

- Keyless Enter-N-Go — Passive Entry (If Equipped) 33
- Child-Protection Door Lock System — Rear Doors 37

■ SEATS 39

- Manual Adjustment (Front Seats) 39
- Manual Adjustment (Rear Seats) 42
- Power Adjustment (Front Seat) 44
- Front Heated Seats — If Equipped 46
- Manual Folding Second Row Seat 47
- Stadium Tip 'n Slide (Easy Entry/Exit Seat) — Seven Passenger Models 48
- Manual Folding Third Row Seats 50
- Seatback/Armrest — Second Row Passenger Seat .52

■ HEAD RESTRAINTS 52

- Supplemental Active Head Restraints (AHR) — Front Seats 53
- Rear Head Restraint Adjustment 55
- Rear Head Restraint Removal 56

■ STEERING WHEEL 56

- Tilt/Telescoping Steering Column 56
- Heated Steering Wheel — If Equipped. 57

■ MIRRORS 58

- Inside Day/Night Mirror — If Equipped 58
- Electrochromic Mirror — If Equipped 59
- Outside Mirrors 60
- Interior Observation Mirror 61
- Power Mirrors 62
- Heated Mirrors — If Equipped 62
- Power Folding Mirrors — If Equipped. 62
- Illuminated Vanity Mirrors — If Equipped 63

■ EXTERIOR LIGHTS 64

- Multifunction Lever 64
- Headlights 64
- Daytime Running Lights (DRL) 65

- High Beam/Low Beam Select Switch 65
- Flash-To-Pass 65
- Automatic Headlights 65
- Headlights On With Wipers (Available With Automatic Headlights Only) 66
- Headlight Time Delay 66
- Lights-On Reminder 66
- Fog Lights — If Equipped 67
- Turn Signals 67
- Lane Change Assist — If Equipped 67

■ INTERIOR LIGHTS 68
- Courtesy/Interior Lighting 68

■ WIPERS AND WASHERS 69
- Windshield Wiper Operation. 69
- Rear Window Wiper/Washer 72

■ CLIMATE CONTROLS 74
- Manual Climate Control Overview 74
- Automatic Climate Controls Overview. 86
- Climate Control Functions 98
- Operating Tips 100

■ WINDOWS 102
- Power Windows 102
- Wind Buffeting 104

■ POWER SUNROOF — IF EQUIPPED 105
- Opening Sunroof 105
- Closing Sunroof 106
- Wind Buffeting 106
- Sunshade Operation 106
- Anti Pinch Protect Feature 106
- Venting Sunroof — Express 107
- Sunroof Maintenance 107
- Ignition Off Operation 107

■ HOOD 107
- Opening 107

- Closing 109

■ LIFTGATE 109

- Opening 109
- Cargo Area Features 110

■ GARAGE DOOR OPENER — IF EQUIPPED 114

- Before You Begin Programming HomeLink 115
- Canadian/Gate Operator Programming 118
- Using HomeLink 119
- Security 119
- Troubleshooting Tips 119
- General Information 120

■ INTERNAL EQUIPMENT 120

- Storage 120
- Cupholders 125
- Power Outlets 126
- Power Inverter — If Equipped 130
- Sunglasses Storage 131

■ ROOF LUGGAGE RACK — IF EQUIPPED 132

KEYS

Key Fob

Your vehicle uses a keyless ignition system. The ignition system consists of a key fob with Remote Keyless Entry (RKE) and a START/STOP push button ignition system. The Remote Keyless Entry system consists of a key fob and Keyless Enter-N-Go feature if equipped.

NOTE: The key fob may not be found if it is located next to a mobile phone, laptop or other electronic device; these devices may block the key fob's wireless signal.

The Remote Keyless Entry (RKE) key fob and an emergency key, which stores in the rear of the key fob.

The emergency key allows for entry into the vehicle should the battery in the vehicle or the key fob go dead. The emergency key is also for locking the glove compartment. You can keep the emergency key with you when valet parking.

To remove the emergency key, slide the mechanical latch on the back of the key fob sideways with your thumb and then pull the key out with your other hand.

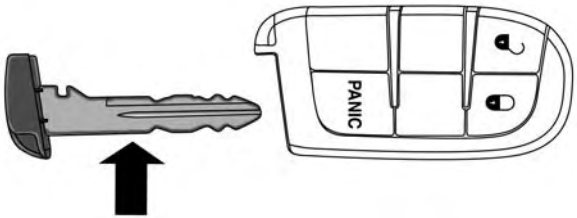

0301114788US

Emergency Key Removal

NOTE: You can insert the double-sided emergency key into the lock cylinders with either side up.

The Remote Keyless Entry system allows you to lock or unlock the doors, open the liftgate, or activate the Panic Alarm from distances up to approximately 66 ft (20 m) using a hand-held key fob with key fob. The key fob does not need to be pointed at the vehicle to activate the system.

NOTE: Driving at speeds 5 MPH (8 km/h) and above disables the system from responding to all key fob buttons for all key fobs.

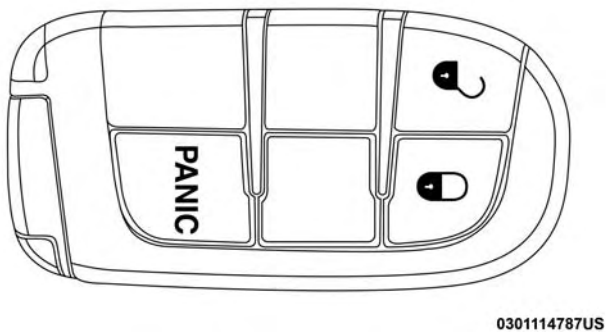

Key Fob

To Unlock The Doors And Liftgate

Push the interior door unlock button on the door panel.

Push and release the unlock button on the key fob once to unlock the driver's door or twice within five seconds to unlock all doors and the liftgate.

All doors can be programmed to unlock on the first push of the unlock button. Refer to "Uconnect Settings" in "Multimedia" for further information.

The turn signal lights will flash to acknowledge the unlock signal. The illuminated entry system will be activated.

1st Push Of Key Fob Unlock Button

This feature lets you program the system to unlock either the driver's door or all doors on the first push of the unlock button on the key fob. To change the current setting, refer to "Uconnect Settings" in "Multimedia" for further information.

NOTE: If the vehicle is equipped with Passive Entry, refer to "Keyless Enter-N-Go — Passive Entry" located in "Doors" in "Getting To Know Your Vehicle" for further information.

Headlight Illumination On Approach

This feature activates the headlights for up to 90 seconds when the doors are unlocked with the key fob. The time for this feature is programmable on vehicles equipped through Uconnect. To change the current setting, refer to "Uconnect Settings" in "Multimedia" for further information.

To Lock The Doors And Liftgate

Push and release the lock button on the key fob to lock all doors and liftgate.

The turn signal lights will flash and the horn will chirp to acknowledge the signal. Refer to "Uconnect Settings" located in "Multimedia" for further programmable information.

If the vehicle is equipped with Passive Entry, refer to "Keyless Enter-N-Go — Passive Entry" located in "Doors" in "Getting To Know Your Vehicle" for further information.

Vehicles Equipped With Keyless Enter-N-Go — Passive Entry

If one or more doors are open, or the liftgate is open, the doors will lock. The doors will unlock again automatically if the key is left inside the passenger compartment, otherwise the doors will stay locked.

Sound Horn With Lock

This feature will cause the horn to chirp when the doors are locked with the key fob. This feature can be turned on or turned off. To change the current setting, refer to "Uconnect Settings" in "Multimedia" for further information.

Using The Panic Alarm

To turn the Panic Alarm feature on or off, push the Panic button on the key fob. When the Panic Alarm is activated, the turn signals will flash, the horn will pulse on and off, and the interior lights will turn on.

The Panic Alarm will stay on for three minutes unless you turn it off by either pushing the Panic button a second time or drive the vehicle at a speed of 15 mph (24 km/h) or greater.

NOTE:

- The interior lights will turn off if you place the ignition in the ACC or ON/RUN position while the Panic Alarm is activated. However, the exterior lights and horn will remain on.
- You may need to be less than 35 ft (11 m) from the vehicle when using the key fob to turn off the Panic Alarm due to the radio frequency noises emitted by the system.

Key Fob Battery Replacement

The recommended replacement battery is one CR2032 battery.

NOTE:

- Perchlorate Material — special handling may apply. See www.dtsc.ca.gov/hazardouswaste/perchlorate
- Do not touch the battery terminals that are on the back housing or the printed circuit board.

1. Remove the emergency key by sliding the mechanical latch on the back of the key fob sideways with your thumb and then pull the key out with your other hand.

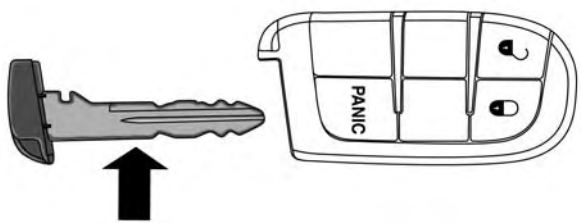

0301114788US

Emergency Key Removal

2. Insert the tip of the emergency key or a #2 flat blade screwdriver into the slot and gently pry the two halves of the key fob apart. Make sure not to damage the seal during removal.

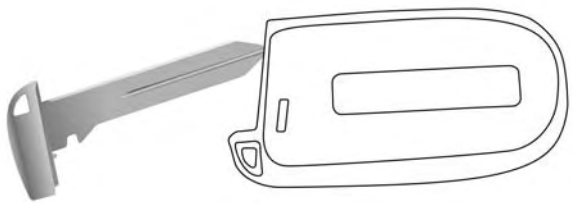

0301101915NA

Separating Key Fob Case

3. Remove the battery by turning the back cover over (battery facing downward) and tapping it lightly on a solid surface such as a table or similar, then replace the battery. When replacing the battery, match the + sign on the battery to the + sign on the inside of the battery clip, located on the back cover. Avoid touching the new

battery with your fingers. Skin oils may cause battery deterioration. If you touch a battery, clean it with rubbing alcohol.

4. To assemble the key fob case, snap the two halves together.

Programming Additional Key Fobs

Programming the key fob may be performed by an authorized dealer.

General Information

The following regulatory statement applies to all radio frequency (RF) devices equipped in this vehicle:

This device complies with Part 15 of the FCC Rules and with Industry Canada license-exempt RSS standard(s). Operation is subject to the following two conditions:

1. This device may not cause harmful interference, and
2. This device must accept any interference received, including interference that may cause undesired operation.

NOTE: Changes or modifications not expressly approved by the party responsible for compliance could void the user's authority to operate the equipment.

IGNITION SWITCH

Keyless Push Button Ignition

This feature allows the driver to operate the ignition with the push of a button as long as the key fob is in the passenger compartment.

The Keyless Push Button Ignition has four operating positions, three of which are labeled and will illuminate when in position. The three positions are OFF, ACC, and ON/RUN. The fourth position is START. During start, ON/RUN will illuminate.

NOTE: If the ignition switch does not change with the push of a button, the key fob may have a low or dead battery. In this situation, a back up method can be used to operate the ignition switch. Put the nose side (side opposite of the emergency key) of the key fob against the ENGINE START/STOP button and push to operate the ignition switch.

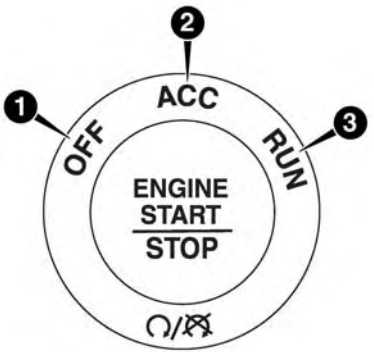

START/STOP Ignition Button

1 — OFF
2 — ACC
3 — RUN

The push button ignition can be placed in the following modes:

OFF

- The engine is stopped.
- Some electrical devices (e.g. Central locking, alarm, etc.) are still available.

ACC

- Engine is not started.
- Some electrical devices are available.

RUN

- Driving position.
- All the electrical devices are available.

START

- The engine will start.

WARNING!

- **When exiting the vehicle, always remove the key fob from the vehicle and lock your vehicle.**

(Continued)

WARNING! *(Continued)*

- **Never leave children alone in a vehicle, or with access to an unlocked vehicle.**
- **Allowing children to be in a vehicle unattended is dangerous for a number of reasons. A child or others could be seriously or fatally injured. Children should be warned not to touch the parking brake, brake pedal or the gear selector.**
- **Do not leave the key fob in or near the vehicle, or in a location accessible to children, and do not leave the ignition of a vehicle equipped with Keyless Enter-N-Go in the ON/RUN mode. A child could operate power windows, other controls, or move the vehicle.**
- **Do not leave children or animals inside parked vehicles in hot weather. Interior heat build-up may cause serious injury or death.**

CAUTION!

An unlocked vehicle is an invitation for thieves. Always remove key fob from the vehicle and lock all doors when leaving the vehicle unattended.

NOTE: Refer to "Starting The Engine," in "Starting And Operating" for further information.

Ignition Or Accessory On Message

Opening the driver's door when the ignition is in ACC or ON (engine not running), a chime will sound to remind you to cycle the ignition to OFF. In addition to the chime, the ignition or accessory on message will display in the cluster.

NOTE: With the Uconnect system, the power window switches, radio, power sunroof (if equipped), and power outlets will remain active for up to 10 minutes after the ignition is cycled to the OFF position. Opening either front door will cancel this feature. The time for this feature is programmable. Refer to "Uconnect Settings" in "Multimedia" for further information.

WARNING!

- **Before exiting a vehicle, always shift the automatic transmission into PARK and apply the parking brake. Always make sure the keyless ignition node is in the "OFF" mode, remove the key fob from the vehicle and lock the vehicle.**
- **Never leave children alone in a vehicle, or with access to an unlocked vehicle.**

(Continued)

WARNING! *(Continued)*

- **Allowing children to be in a vehicle unattended is dangerous for a number of reasons. A child or others could be seriously or fatally injured. Children should be warned not to touch the parking brake, brake pedal or the gear selector.**
- **Do not leave the key fob in or near the vehicle, or in a location accessible to children, and do not leave the ignition of a vehicle equipped with Keyless Enter-N-Go in the ACC or ON/RUN mode. A child could operate power windows, other controls, or move the vehicle.**
- **Do not leave children or animals inside parked vehicles in hot weather. Interior heat build-up may cause serious injury or death.**

CAUTION!

An unlocked vehicle is an invitation. Always remove the key fobs from vehicle, place the ignition in the OFF position and lock all doors when leaving the vehicle unattended.

REMOTE START — IF EQUIPPED

How To Use Remote Start

All of the following conditions must be met before the engine will remote start:

- Gear selector in PARK
- Doors closed
- Hood closed
- Liftgate closed
- HAZARD switch off
- BRAKE switch inactive (brake pedal not pushed)
- Battery at an acceptable charge level
- System not disabled from previous remote start event
- Vehicle security alarm not active
- Ignition in OFF position

WARNING!

- **Do not start or run an engine in a closed garage or confined area. Exhaust gas contains Carbon Monoxide (CO) which is odorless and colorless. Carbon Monoxide is poisonous and can cause serious injury or death when inhaled.**
- **Keep key fobs away from children. Operation of the Remote Start System, windows, door locks or other controls could cause serious injury or death.**

Remote Start Abort Message

The following messages will appear in the instrument cluster display if the vehicle fails to remote start or exits remote start prematurely if equipped with Remote Start:

- Remote Start Aborted — Door Open
- Remote Start Aborted — Hood Open
- Remote Start Aborted — Fuel Low
- Remote Start Aborted — L/Gate Open
- Remote Start Disabled — Start Vehicle To Reset

The message stays active until the ignition is cycled to the ON/RUN position.

To Enter Remote Start Mode

Push and release the remote start button on the key fob twice within five seconds. The vehicle doors will lock, the parking lights will flash and the horn will chirp twice (if programmed). Then, the engine will start and the vehicle will remain in the Remote Start mode for a 15-minute cycle.

NOTE:

- If an engine fault is present or fuel level is low, the vehicle will start and then shut down in 10 seconds.
- The park lamps will turn on and remain on during Remote Start mode.
- For security, power window and power sunroof operation (if equipped) are disabled when the vehicle is in the Remote Start mode.
- The engine can be started two consecutive times (two 15-minute cycles) with the key fob. However, the ignition must be cycled to the RUN position before you can repeat the start sequence for a third cycle.

To Exit Remote Start Mode Without Driving The Vehicle

Push and release the remote start button one time or allow the engine to run for the entire 15-minute cycle.

NOTE: To avoid unintentional shutdowns, the system will disable the one time push of the remote start button for two seconds after receiving a valid Remote Start request.

To Exit Remote Start Mode And Drive The Vehicle

Before the end of 15-minute cycle, push and release the unlock button on the key fob to unlock the doors and disarm the vehicle security alarm (if equipped). Then, prior to the end of the 15-minute cycle, push and release the ignition START/STOP button.

NOTE: The message "Push Start Button" will appear in the instrument cluster display until you push the ignition START/STOP button.

Remote Start Comfort Systems — If Equipped

When Remote Start is activated, the driver heated seat feature will automatically turn on in cold weather. This feature will stay on through the duration of Remote Start or until the ignition switch is turned to the ON/RUN position.

The Remote Start Comfort System can be activated and deactivated through the Uconnect system. Refer to "Uconnect Settings" in "Multimedia" for further information on Remote Start Comfort System operation.

General Information

The following regulatory statement applies to all radio frequency (RF) devices equipped in this vehicle:

This device complies with Part 15 of the FCC Rules and with Industry Canada license-exempt RSS standard(s). Operation is subject to the following two conditions:

1. This device may not cause harmful interference, and
2. This device must accept any interference received, including interference that may cause undesired operation.

NOTE: Changes or modifications not expressly approved by the party responsible for compliance could void the user's authority to operate the equipment.

SENTRY KEY

The Sentry Key Immobilizer system prevents unauthorized vehicle operation by disabling the engine. The system does not need to be armed or activated. Operation is automatic, regardless of whether the vehicle is locked or unlocked.

The system uses a key fob and a Keyless Push Button Ignition, and a RF receiver to prevent unauthorized vehicle operation. Therefore, only key fobs that are programmed to the vehicle can be used to start and operate the vehicle. If an invalid key fob is used to attempt to start and operate the vehicle, the system will not allow the engine to crank. If an invalid key fob is used to start the engine, the system will shut the engine off in two seconds.

After placing the ignition to the ON/RUN mode, the vehicle security light will turn on for three seconds for a bulb check. If the light remains on after the bulb check, it indicates that there is a problem with the electronics. In addition, if the light begins to flash after the bulb check, it indicates that someone used an invalid key fob to start the engine. Either of these conditions will result in the engine being shut off after two seconds.

If the vehicle security light turns on during normal vehicle operation (vehicle running for longer than 10 seconds), it indicates that there is a fault in the electronics. Should this occur, have the vehicle serviced as soon as possible by an authorized dealer.

CAUTION!

The Sentry Key Immobilizer system is not compatible with some aftermarket remote starting systems. Use of these systems may result in vehicle starting problems and loss of security protection.

All of the key fobs provided with your new vehicle have been programmed to the vehicle electronics.

Customer Key Programming

Programming key fobs may be performed at an authorized dealer.

Replacement Keys

NOTE: Only key fobs that are programmed to the vehicle electronics can be used to start and operate the vehicle. Once a key fob is programmed to a vehicle, it cannot be programmed to any other vehicle.

CAUTION!

- **Always remove the key fobs from the vehicle and lock all doors when leaving the vehicle unattended.**
- **For vehicles equipped with Keyless Enter-N-Go — Ignition, always remember to place the ignition in the OFF position.**

NOTE: Duplication of key fobs may be performed at an authorized dealer. This procedure consists of programming a blank key fob to the vehicle electronics. A blank key fob is one that has never been programmed.

When having the Sentry Key Immobilizer System serviced, bring all vehicle keys with you to an authorized dealer.

General Information

The following regulatory statement applies to all radio frequency (RF) devices equipped in this vehicle:

This device complies with Part 15 of the FCC Rules and with Industry Canada license-exempt RSS standard(s). Operation is subject to the following two conditions:

1. This device may not cause harmful interference, and
2. This device must accept any interference received, including interference that may cause undesired operation.

NOTE: Changes or modifications not expressly approved by the party responsible for compliance could void the user's authority to operate the equipment.

VEHICLE SECURITY ALARM — IF EQUIPPED

The vehicle security alarm monitors the vehicle doors and liftgate for unauthorized entry and the Keyless Enter-N-Go Start/Stop button for unauthorized operation. While the vehicle security alarm is armed, interior switches for door locks are disabled. If something triggers the alarm, the vehicle security alarm will provide the following audible and visible signals: the horn will pulse, the headlights will

turn on, the park lamps and/or turn signals will flash, and the vehicle security light in the instrument cluster will flash.

To Arm The System

Follow these steps to arm the vehicle security alarm:

1. Make sure the vehicle ignition system is OFF (refer to "Starting The Engine" in "Starting And Operating" for further information).
2. Perform one of the following methods to lock the vehicle:
   - Push lock on the interior power door lock switch with the driver and/or passenger door open.
   - Push the lock button on the exterior Passive Entry Door Handle with a valid key fob available in the same exterior zone (refer to "Keyless Enter-N-Go — Passive Entry" in "Getting To Know Your Vehicle" for further information).
   - Push the lock button on the key fob.
3. If any doors are open, close them.

To Disarm The System

The vehicle security alarm can be disarmed using any of the following methods:

- Push the unlock button on the key fob.
- Grasp the Passive Entry Unlock Door Handle with a valid key fob within 5 ft (1.5 m) of the passive entry door handle (if equipped, refer to "Keyless Enter-N-Go — Passive Entry" in "Getting To Know Your Vehicle" for further information).
- Cycle the vehicle ignition system out of the OFF position.
  - For vehicles equipped with Keyless Enter-N-Go — Passive Entry, push the Keyless Enter-N-Go — Ignition Start/Stop button (requires at least one valid key fob in the vehicle).
  - For vehicles not equipped with Keyless Enter-N-Go, insert a valid key into the ignition switch and turn the key to the ON position.

NOTE:

- The driver's door key cylinder and the liftgate button on the key fob cannot arm or disarm the vehicle security alarm.
- When the vehicle security alarm is armed, the interior power door lock switches will not unlock the doors.

The vehicle security alarm is designed to protect your vehicle; however, you can create conditions where the system will give you a false alarm. If one of the previously described arming sequences has occurred, the vehicle security alarm will arm regardless of whether you are in the vehicle or not. If you remain in the vehicle and open a door, the alarm will sound. If this occurs, disarm the vehicle security alarm.

If the vehicle security alarm is armed and the battery becomes disconnected, the vehicle security alarm will remain armed when the battery is reconnected; the exterior lights will flash, the horn will sound. If this occurs, disarm the vehicle security alarm.

Rearming Of The System

If something triggers the alarm, and no action is taken to disarm it, the vehicle security alarm will turn the horn off after 3 minutes, turn all of the visual signals off after 15 additional minutes, and then the vehicle security alarm will rearm itself.

Security System Manual Override

The vehicle security alarm will not arm if you lock the doors using the manual door lock plunger.

Tamper Alert

If something has triggered the vehicle security alarm in your absence, the horn will sound three times and the exterior lights will blink three times when you disarm the vehicle security alarm. Check the vehicle for tampering.

DOORS

Manual Door Locks

To lock each door, push the door lock knob on each door trim panel downward. To unlock the front doors, pull the inside door handle to the first detent. To unlock the rear doors, pull the door lock knob on the door trim panel upward.

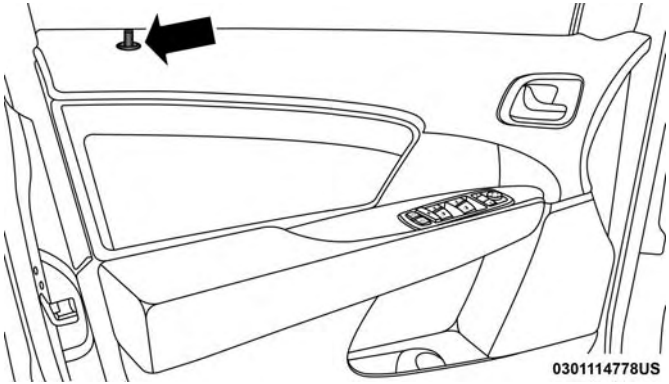

Manual Door Lock Knob

If the door lock knob is down when you shut the door, the door will lock. Therefore, make sure the key fob is not inside the vehicle before closing the door.

NOTE: The manual door locks will not lock or unlock the liftgate.

WARNING!

- **For personal security and safety in the event of a collision, lock the vehicle doors before you drive as well as when you park and leave the vehicle.**
- **When leaving the vehicle, always remove the key fob from the vehicle and lock your vehicle. Unsupervised use of vehicle equipment may cause severe personal injuries or death.**
- **Never leave children alone in a vehicle, or with access to an unlocked vehicle. Allowing children to be in a vehicle unattended is dangerous for a number of reasons. A child or others could be seriously or fatally injured. Children should be warned not to touch the parking brake, brake pedal or the gear selector.**
- **Do not leave the key fob in or near the vehicle or in a location accessible to children, and do not leave the ignition of a vehicle equipped with Keyless Enter-N-Go in the ACC or ON/RUN mode. A child could operate power windows, other controls, or move the vehicle.**

Power Door Locks

A power door lock switch is on each front door trim panel. Use this switch to lock or unlock the doors and liftgate.

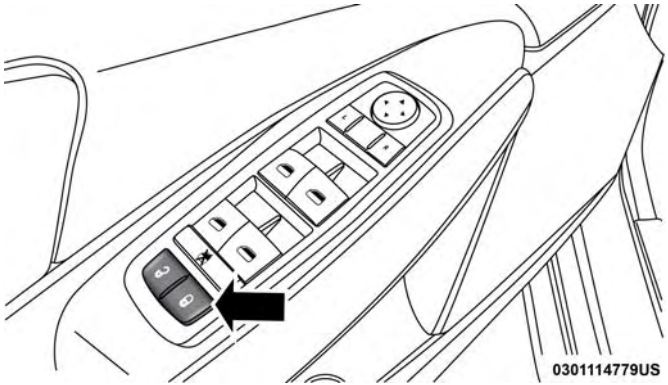

Power Door Lock Switch Location

The doors can also be locked and unlocked with the Keyless Enter-N-Go (Passive Entry) system. Refer to "Keyless Enter-N-Go" in "Getting To Know Your Vehicle" for further information.

If you push the power door lock switch, with the ignition in the ON/RUN or ACC position and any front door is open, the power locks will not operate. This prevents you from accidentally locking the key fob in the vehicle. Turning off the ignition or closing the door will allow the locks to operate. If a door is open, and the ignition is in the ON/RUN or ACC position, a chime will sound as a reminder to remove the key fob.

Automatic Door Locks — If Equipped

The auto door lock feature default condition is enabled. When enabled, the door locks will lock automatically when the vehicle's speed exceeds 15 mph (24 km/h). The auto door lock feature can be enabled or disabled by your authorized dealer per written request of the customer. Please see your authorized dealer for service.

Auto Unlock On Exit

The doors will unlock automatically on vehicles with power door locks if:

1. The Automatic Unlock Doors On Exit feature is enabled.
2. The transmission was in gear and the vehicle speed returned to 0 mph (0 km/h).
3. The transmission is in PARK.
4. Any vehicle door is opened.
5. The doors were not previously unlocked.
6. The vehicle speed is 0 mph (0 km/h).

To change the current setting, refer to "Uconnect Settings" in "Multimedia" for further information.

NOTE: Use the Automatic Unlock Doors On Exit feature in accordance with local laws.

Keyless Enter-N-Go — Passive Entry (If Equipped)

The Passive Entry system is an enhancement to the vehicle's Remote Keyless Entry (RKE) system and a feature of Keyless Enter-N-Go. This feature allows you to lock and unlock the vehicle's door(s) without having to push the key fob lock or unlock buttons.

NOTE:

- Passive Entry may be programmed ON/OFF; refer to "Uconnect Settings" in "Multimedia" for further information.
- If wearing gloves on your hands, or if it has been raining/snowing on the Passive Entry door handle, the unlock sensitivity can be affected, resulting in a slower response time.
- If the vehicle is unlocked by Passive Entry and no door is opened within 60 seconds, the vehicle will re-lock and if equipped will arm the security alarm.
- The key fob may not be detected by the vehicle passive entry system if it is located next to a mobile phone, laptop, or other electronic device; these devices may interfere with the key fob's wireless signal and prevent the passive entry system from locking/unlocking the vehicle.

To Unlock From The Driver's Side:

With a valid Passive Entry key fob within 5 ft (1.5 m) of the driver's door handle, grab the driver's front door handle to unlock the driver's door automatically. The interior door panel lock knob will raise when the door is unlocked.

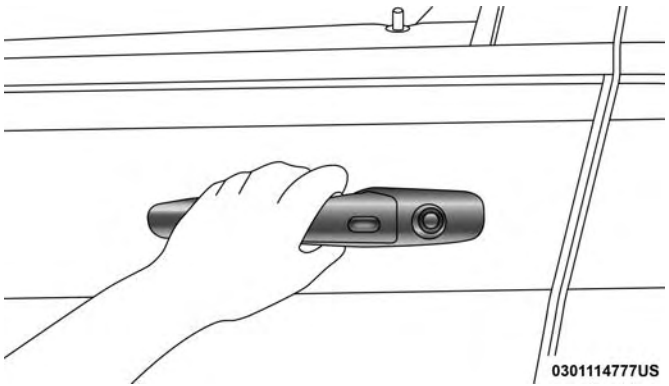

Grab The Door Handle To Unlock

NOTE: If "Unlock All Doors 1st Press" is programmed all doors will unlock when you grab hold of the driver's front door handle. To select between "Unlock Driver Door 1st Press" and "Unlock All Doors 1st Press," refer to "Uconnect Settings" in "Multimedia" for further information.

To Unlock From The Passenger Side:

With a valid Passive Entry key fob within 5 ft (1.5 m) of the passenger door handle, grab the front passenger door handle to unlock all four doors and the liftgate automatically.

NOTE: All doors and the liftgate will unlock when the front passenger door handle is grabbed regardless of the driver's door unlock preference setting ("Unlock Driver Door 1st Press" or "Unlock All Doors 1st Press").

Preventing Inadvertent Locking Of Passive Entry Key Fob In Vehicle:

To minimize the possibility of unintentionally locking a Passive Entry key fob inside your vehicle, the Passive Entry system is equipped with an automatic door unlock feature which will function if the ignition is OFF.

If one of the vehicle doors is open and the vehicle is locked with a door panel switch, key fob button or door handle button, once all open doors have been closed the vehicle checks the inside and outside of the vehicle for any valid Passive Entry key fobs. If one of the vehicle's Passive Entry key fobs is detected inside the vehicle, and no other valid Passive Entry key fobs are detected outside the vehicle, the Passive Entry System automatically unlocks all vehicle doors and chirps the horn three times (on the third attempt, ALL doors will lock and the Passive Entry key fob can be locked in the vehicle).

To Enter The Liftgate:

With a valid Passive Entry key fob within 5 ft (1.5 m) of the liftgate, push the button underneath the left side of the accent bar, which is located on the liftgate below the glass, to lock or unlock the vehicle.

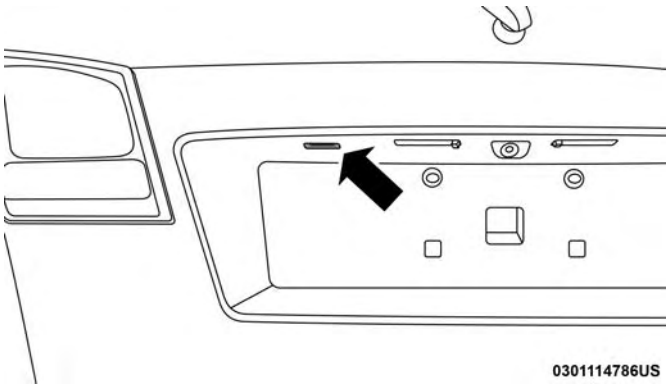

Liftgate Unlock/Lock Button

To Lock The Vehicle's Doors:

With one of the vehicle's Passive Entry key fobs within 5 ft (1.5 m) of the driver or passenger front door handle, push the door handle lock button to lock all four doors and liftgate.

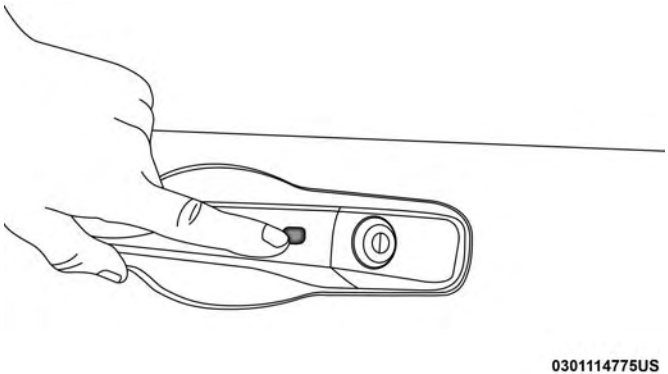

Push The Door Handle Button To Lock

Do NOT grab the door handle, when pushing the door handle button. This could unlock the door(s).

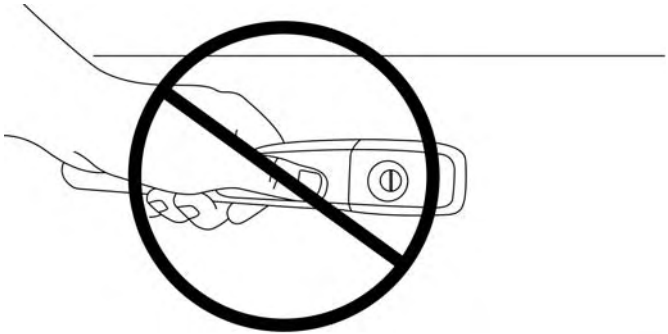

0301114776US

Do NOT Grab The Door Handle When Locking

NOTE:

- After pushing the door handle button, you must wait two seconds before you can lock or unlock the doors, using either Passive Entry door handle. This is done to allow you to check if the vehicle is locked by pulling the door handle, without the vehicle reacting and unlocking.
- If Passive Entry is disabled using Uconnect System, the key protection described in "Preventing Inadvertent Locking of Passive Entry key fob in Vehicle" remains active/functional.
- The Passive Entry system will not operate if the key fob battery is dead.

The vehicle doors can also be locked by using the key fob lock button or the lock button located on the vehicle's interior door panel.

Child-Protection Door Lock System — Rear Doors

To Engage The Child-Protection Door Lock System

To provide a safer environment for small children riding in the rear seats, the rear doors are equipped with a Child-Protection Door Lock system.

1. Open the rear door.
2. Insert the tip of the emergency key (or alike) into the child lock control and rotate it to the lock position.

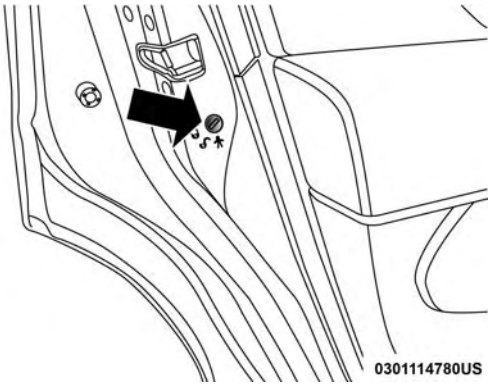

Child-Protection Door Lock Location

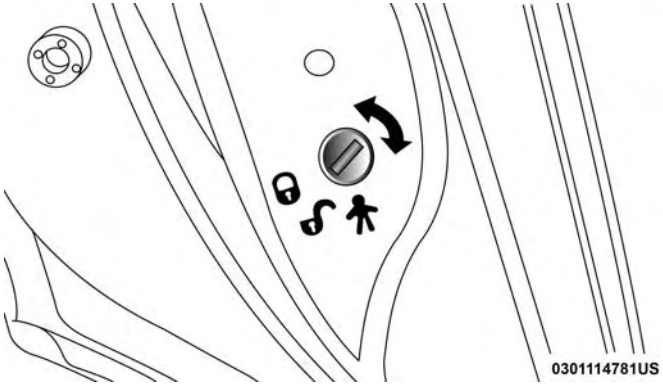

Child-Protection Door Lock Function

3. Repeat steps 1 and 2 for the opposite rear door.

NOTE: When the Child-Protection Door lock system is engaged, the door can be opened only by using the outside door handle even though the inside door lock is in the unlocked position.

WARNING!

Avoid trapping anyone in a vehicle in a collision. Remember that the rear doors can only be opened from the outside when the Child-Protection locks are engaged. Failure to follow this warning may result in serious injury or death.

NOTE:

- After engaging the Child-Protection Door lock system, always test the door from the inside to make certain it is in the desired position.
- For emergency exit with the system engaged, move the lock knob up to the unlock position, roll down the window, and open the door with the outside door handle.

To Disengage The Child-Protection Door Lock System

1. Open the rear door.
2. Insert the tip of the emergency key (or alike) into the child lock control and rotate it to the unlock position.

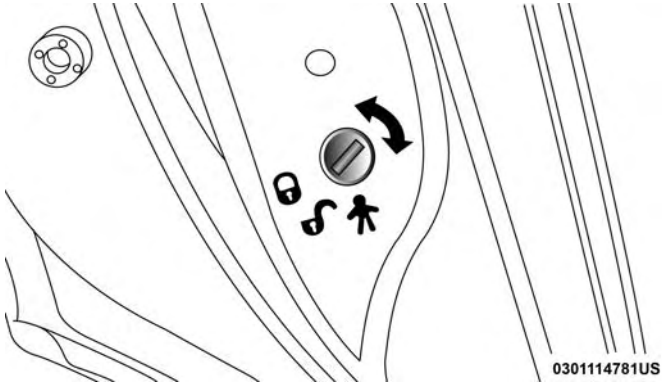

Child-Protection Door Lock Function

3. Repeat steps 1 and 2 for the opposite rear door.

NOTE: After disengaging the Child-Protection Door Lock system, always test the door from the inside to make certain it is in the desired position.

SEATS

Seats are a part of the Occupant Restraint System of the vehicle.

WARNING!

- **It is dangerous to ride in a cargo area, inside or outside of a vehicle. In a collision, people riding in these areas are more likely to be seriously injured or killed.**
- **Do not allow people to ride in any area of your vehicle that is not equipped with seats and seat belts. In a collision, people riding in these areas are more likely to be seriously injured or killed.**
- **Be sure everyone in your vehicle is in a seat and using a seat belt properly.**

Manual Adjustment (Front Seats)

WARNING!

- **Adjusting a seat while the vehicle is moving is dangerous. The sudden movement of the seat could cause you to lose control. The seat belt might not be adjusted properly and you could be injured. Adjust the seat only while the vehicle is parked.**
- **Do not ride with the seatback reclined so that the shoulder belt is no longer resting against your chest. In a collision you could slide under the seat belt and be seriously or even fatally injured. Use the recliner only when the vehicle is parked.**

Forward/Rearward Adjustment

For models equipped with manual seats, the driver and passenger seats can be adjusted forward or rearward by using a bar located by the front of the seat cushion, near the floor.

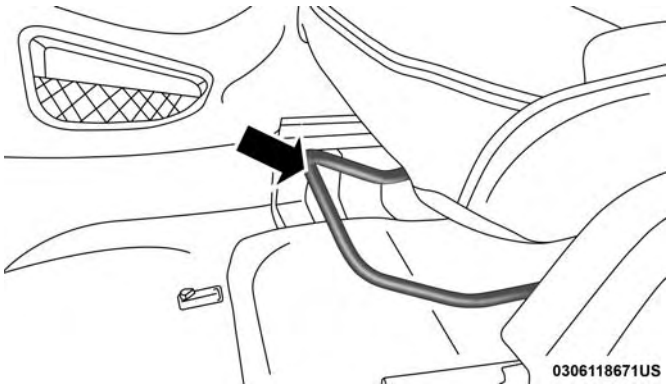

Forward/Rearward Seat Adjustment Bar

While sitting in the seat, lift up on the bar and move the seat forward or rearward. Release the bar once the desired position has been reached. Then, using body pressure, move forward and rearward on the seat to be sure that the seat adjusters have latched.

WARNING!

- **Adjusting a seat while driving may be dangerous. Moving a seat while driving could result in loss of control which could cause a collision and serious injury or death.**
- **Seats should be adjusted before fastening the seat belts and while the vehicle is parked. Serious injury or death could result from a poorly adjusted seat belt.**

Driver's Seat Height Adjustment — If Equipped

The seat height control lever is located on the outboard side of the seat. Raise the lever to raise the seat. Lower the lever to lower the seat. The total seat travel is approximately 2.15 inches (55 mm).

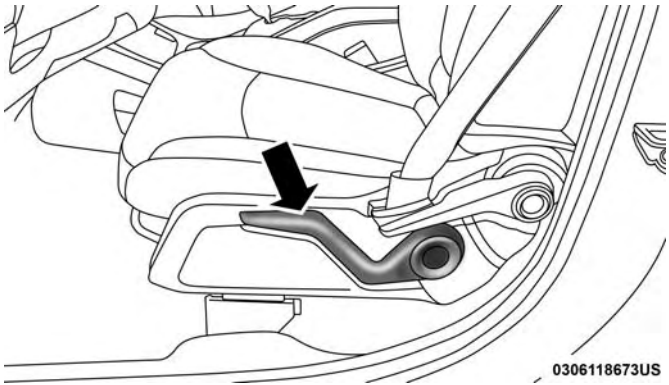

Seat Height Adjustment Lever

Recliner Adjustment

The recline lever is located on the outboard side of the seat. To recline the seat, lean forward slightly, lift the lever, lean back to the desired position and release the lever. To return the seatback to its normal upright position, lean forward and lift the lever. Release the lever once the seatback is in the upright position.

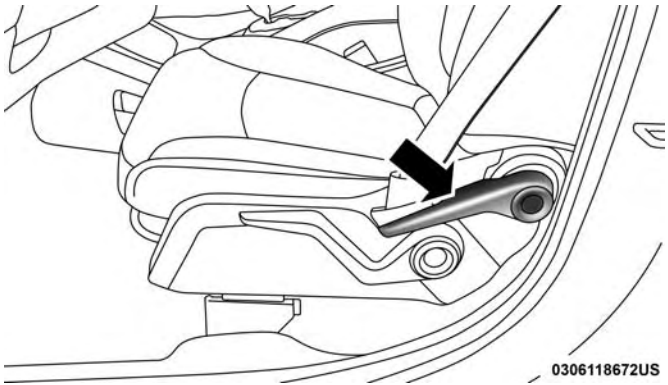

Recline Lever

WARNING!

- **Adjusting a seat while the vehicle is moving is dangerous. The sudden movement of the seat could cause you to lose control. The seat belt might not be adjusted properly and you could be injured. Adjust the seat only while the vehicle is parked.**
- **Do not ride with the seatback reclined so that the shoulder belt is no longer resting against your chest. In a collision you could slide under the seat belt and be seriously or even fatally injured. Use the recliner only when the vehicle is parked.**

Manual Adjustment (Rear Seats)

To provide additional storage area, each second-row passenger seat can be folded flat. This allows for extended cargo space and still maintains some seating room if needed.

NOTE: Prior to folding the second-row passenger seat, make sure the front seatback is not in a reclined position. This will allow the second-row seat to fold easily.

WARNING!

- **It is extremely dangerous to ride in a cargo area, inside or outside of a vehicle. In a collision, people riding in these areas are more likely to be seriously injured or killed.**
- **Do not allow people to ride in any area of your vehicle that is not equipped with seats and seat belts.**
- **Be sure everyone in your vehicle is in a seat and using a seat belt properly.**
- **On seven passenger models, do not allow a passenger to sit in a third row seat with the second row seatback(s) folded flat. In a collision, the passenger could slide underneath the seat belt and be seriously or even fatally injured.**

Recliner Adjustment

The recline lever is on the outboard side of the seat. To recline the seatback, lean back, lift the lever, position the seatback as desired, and then release the lever. To return the seatback to its normal upright position, lean back, lift the lever, lean forward, and then release the lever once the seatback is in the upright position.

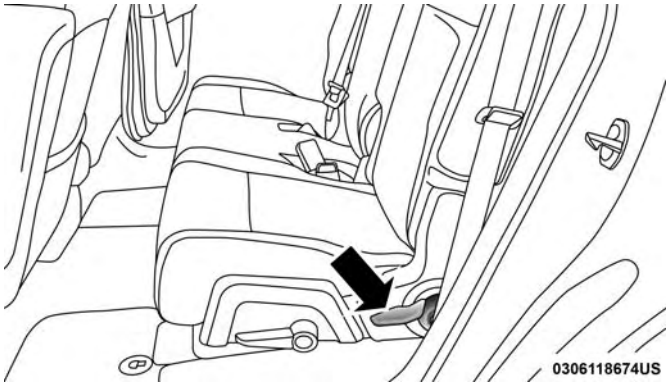

Recline Lever

WARNING!

- **Adjusting a seat while the vehicle is moving is dangerous. The sudden movement of the seat could cause you to lose control. The seat belt might not be adjusted properly and you could be injured. Adjust the seat only while the vehicle is parked.**
- **Do not ride with the seatback reclined so that the shoulder belt is no longer resting against your chest. In a collision you could slide under the seat belt and be seriously or even fatally injured. Use the recliner only when the vehicle is parked.**

Forward And Rearward Adjustment

The control lever is on the outboard side of the seat. Lift the lever to move the seat forward or rearward. Release the lever once the seat is in the desired position. Then, using body pressure, move forward and rearward on the seat to be sure that the seat adjusters have latched.

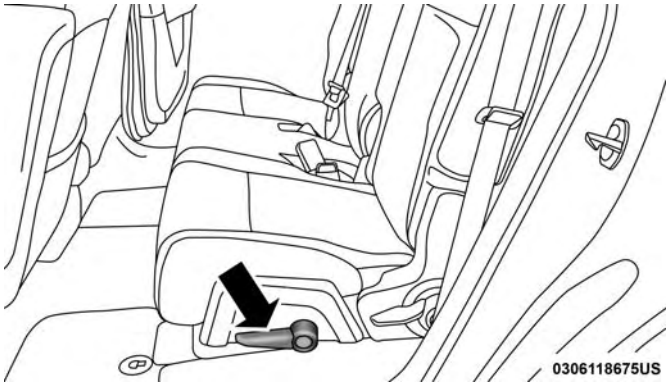

Manual Seat Adjustment

WARNING!

Adjusting a seat while the vehicle is moving is dangerous. The sudden movement of the seat could cause you to lose control. The seat belt might not be adjusted properly and you could be injured. Adjust any seat only while the vehicle is parked.

Power Adjustment (Front Seat)

The power seat switch is on the outboard side of the seat near the floor. Use this switch to move the seat up, down, forward, rearward or to tilt the seat.

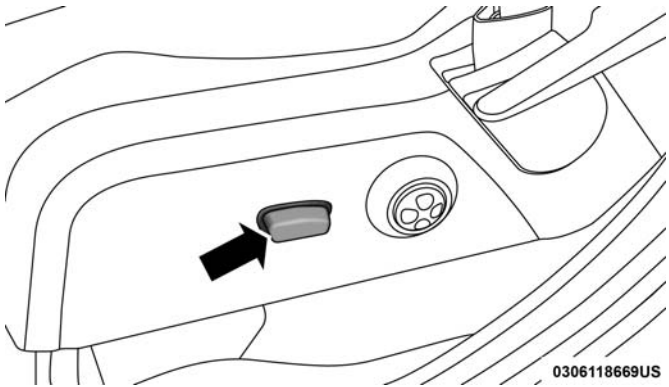

Power Seat Switch

Adjusting The Seat Forward Or Rearward

The seat can be adjusted both forward and rearward. Push the seat switch forward or rearward, and the seat will move in the direction of the switch. Release the switch when the desired position has been reached.

Adjusting The Seat Up Or Down

The height of the seats can be adjusted up or down. Pull upward or push downward on the rear of seat switch, the seat will move in the direction of the switch. Release the switch when the desired position has been reached.

Tilting The Seat Up Or Down

The angle of the seat cushion can be adjusted in four directions. Pull upward or push downward on the front or rear of the seat switch; the front or rear of the seat cushion will move in the direction of the switch. Release the switch when the desired position is reached.

WARNING!

- **Adjusting a seat while driving may be dangerous. Moving a seat while driving could result in loss of control which could cause a collision and serious injury or death.**
- **Seats should be adjusted before fastening the seat belts and while the vehicle is parked. Serious injury or death could result from a poorly adjusted seat belt.**
- **Do not ride with the seatback reclined so that the shoulder belt is no longer resting against your chest. In a collision you could slide under the seat belt, which could result in serious injury or death.**

CAUTION!

Do not place any article under a power seat or impede its ability to move as it may cause damage to the seat controls. Seat travel may become limited if movement is stopped by an obstruction in the seat's path.

Power Lumbar — If Equipped

The Power Lumbar switch is located on the outboard side of the driver's seat. Push the switch forward to increase the lumbar support. Push the switch rearward to decrease the lumbar support. Pushing upward or downward on the switch will raise or lower the position of the support.

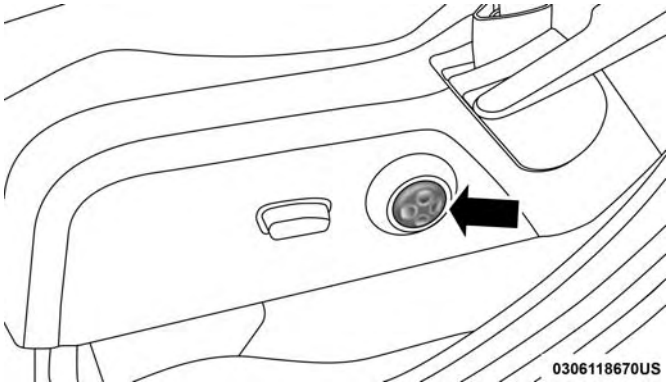

Power Lumbar Switch

Front Heated Seats — If Equipped

The front heated seats control buttons are located within the Uconnect system. You can gain access to the control buttons through the climate screen or the controls screen.

- Press the heated seat button once to turn the HI setting on.
- Press the heated seat button a second time to turn the LO setting on.
- Press the heated seat button a third time to turn the heating elements off.

If the HI-level setting is selected, the system will automatically switch to LO-level after approximately 60 minutes of continuous operation. At that time, the display will change from HI to LO, indicating the change. The LO-level setting will turn off automatically after approximately 45 minutes.

NOTE: The engine must be running for the heated seats to operate.

Vehicles Equipped With Remote Start

On models that are equipped with remote start, the heated seats can be programmed to come on during a remote start.

This feature can be programmed through the Uconnect system. Refer to "Uconnect Settings" in "Multimedia" for further information.

WARNING!

- **Persons who are unable to feel pain to the skin because of advanced age, chronic illness, diabetes, spinal cord injury, medication, alcohol use, exhaustion or other physical condition must exercise care when using the seat heater. It may cause burns even at low temperatures, especially if used for long periods of time.**
- **Do not place anything on the seat or seatback that insulates against heat, such as a blanket or cushion. This may cause the seat heater to overheat. Sitting in a seat that has been overheated could cause serious burns due to the increased surface temperature of the seat.**

Manual Folding Second Row Seat

To Fold The Seat

1. Locate the control lever on the lower outboard side of the seat.

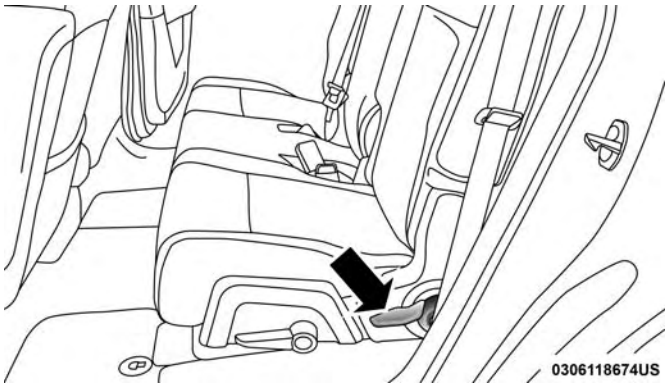

Seatback Release

2. Place one hand on the seatback and apply a gentle pressure.
3. Lift the control lever with the other hand, allow the seatback to move forward slightly, and then release the lever.

WARNING!

To prevent personal injury or damage to objects, keep your head, arms, and objects out of the folding path of the seatback.

4. Gently guide the seatback into the folded position.

NOTE: You may experience deformation in the seat cushion from the seat belt buckles if the seats are left folded for an extended period of time. This is normal and by simply opening the seats to the open position, over time the seat cushion will return to its normal shape.

To Unfold The Seat

Raise the seatback and lock it in place.

WARNING!

Be certain that the seatback is securely locked into position. If the seatback is not securely locked into position the seat will not provide the proper stability for child seats and/or passengers. An improperly latched seat could cause serious injury.

Stadium Tip 'n Slide (Easy Entry/Exit Seat) — Seven Passenger Models

This feature allows passengers to easily enter or exit the third-row passenger seats from either side of the vehicle.

To Move The Second-Row Passenger Seat Forward

NOTE: Raise the seatback/armrest before moving the seat to allow for full seat travel.

Move the control lever on the upper outboard side of the seatback forward. Then, in one fluid motion, the seat cushion flips upward and the seat moves forward on its tracks.

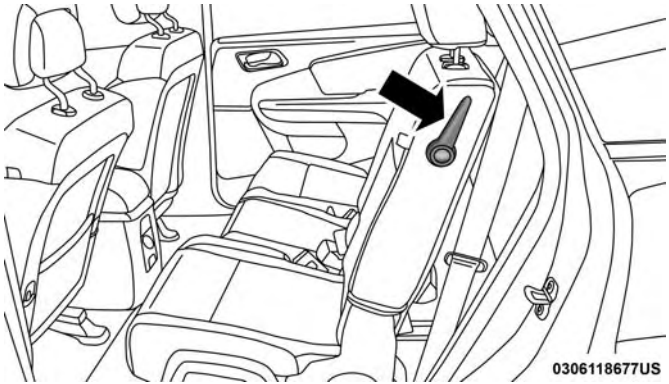

Tip 'n Slide Control Lever

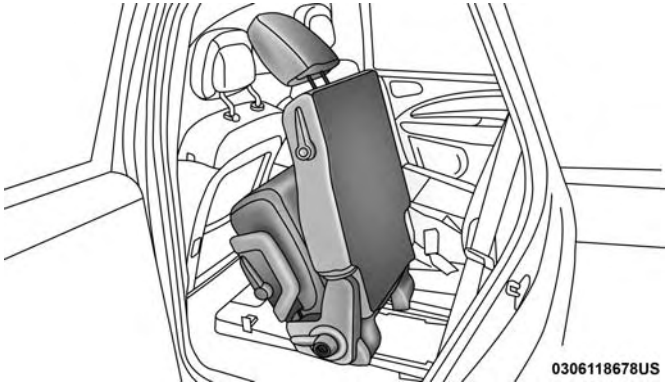

Tip 'n Slide Seat

NOTE: A hand-grip is molded into the front of each quarter trim panel near the door opening to assist entry and exit from the third-row passenger seats.

WARNING!
Do not drive the vehicle with the seat in this position, as it is only intended for entering and exiting the third row seats. Failure to follow this warning may result in personal injury.

To Unfold And Move The Second-Row Passenger Seat Rearward

Move the seatback rearward until it locks in place and then continue sliding the seat rearward on its tracks until it locks in place.

Push the seat cushion downward to lock it in place.

Adjust the seat track position as desired. Using body pressure, move forward and rearward on the seat to be sure that the seat adjusters have latched.

WARNING!

Be certain that the seatback is securely locked into position. If the seatback is not securely locked into position the seat will not provide the proper stability for child seats and/or passengers. An improperly latched seat could cause serious injury.

Manual Folding Third Row Seats

To provide additional storage area, each third-row passenger seatback can be folded flat. This allows for extended cargo space and still maintains some rear seating room if needed.

NOTE: Prior to folding the third-row passenger seatback, make sure the second-row passenger seatback is not in a reclined position. This will allow the seatback to fold easily.

To Fold The Seatback

Pull the latch release-loop located at the top of the seatback upward, push the seatback forward slightly, and release the release-loop. Then, continue to push the seatback forward. The head restraints will fold automatically as the seatback moves forward.

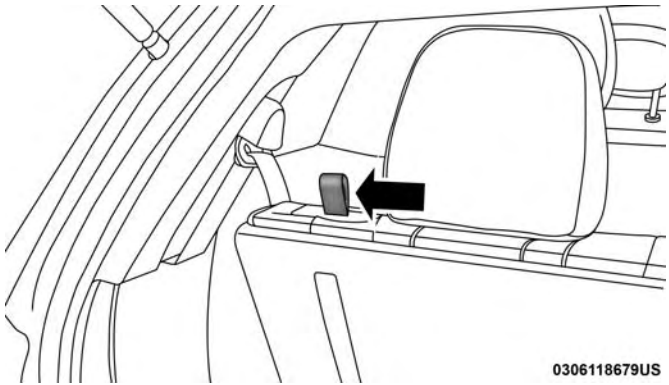

Seatback Release

NOTE: You may experience deformation in the seat cushion from the seat belt buckles if the seats are left folded for an extended period of time. This is normal and by simply opening the seats to the open position, over time the seat cushion will return to its normal shape.

To Unfold The Seatback

Grasp the assist strap loop on the seatback and pull it toward you to raise the seatback. Continue to raise the seatback until it locks in place. Raise the head restraint to lock it in place.

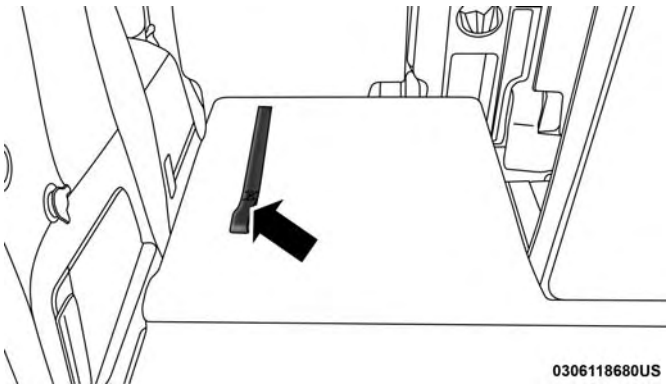

Assist Strap

The seatback can also be locked in the reclined position. To do so, pull the latch release-loop located at the top of the seatback upward, allow the seatback to recline, and release the release-loop.

WARNING!

- **Be certain that the seatback is locked securely into position. Otherwise, the seat will not provide the proper stability for passengers. An improperly latched seat could cause serious injury.**
- **Do not allow a passenger to sit in a third row seat without having the head restraint unfolded and locked in place. Failure to follow this warning may result in personal injury to the passenger in the event of a collision.**
- **Do not allow a passenger to sit in a third row seat with the second row seatback(s) folded flat. In a collision, the passenger could slide underneath the seat belt and be seriously or even fatally injured.**

Seatback/Armrest — Second Row Passenger Seat

The latch release-loop is located at the top of the seatback/armrest. Pull the release-loop forward to release the latch and then downward to lower the seatback/armrest.

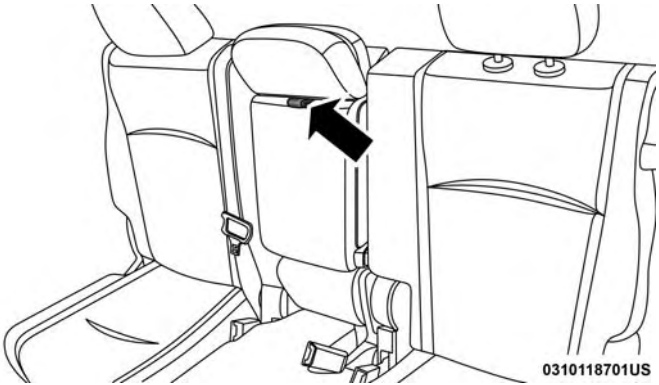

Seatback/Armrest

Raise the seatback/armrest and lock it in place when not in use, or when additional seating area is required.

WARNING!

Keep the latch clean and free of objects and be certain that the seatback/armrest is locked securely into position. Otherwise, the seat will not provide the proper stability for child seats and/or passengers. An improperly latched seat could cause serious injury.

HEAD RESTRAINTS

Head restraints are designed to reduce the risk of injury by restricting head movement in the event of a rear impact. Head restraints should be adjusted so that the top of the head restraint is located above the top of your ear.

WARNING!

- **All occupants, including the driver, should not operate a vehicle or sit in a vehicle's seat until the head restraints are placed in their proper positions in order to minimize the risk of neck injury in the event of a crash.**
- **Head restraints should never be adjusted while the vehicle is in motion. Driving a vehicle with the head restraints improperly adjusted or removed could cause serious injury or death in the event of a collision.**

Supplemental Active Head Restraints (AHR) — Front Seats

Supplemental Active Head Restraints are passive, deployable components, and vehicles with this equipment can not be readily identified by any markings, only through visual inspection of the head restraint. The head restraint will be split in two halves, with the front half being soft foam and trim, the back half being decorative plastic.

When AHRs deploy during a rear impact, the front half of the head restraint extends forward to minimize the gap between the back of the occupant's head and the AHR. This system is designed to help prevent or reduce the extent of injuries to the driver and front passenger in certain types of rear impacts. Refer to "Occupant Restraints" in "Safety" for further information.

To raise the head restraint, pull upward on the head restraint. To lower the head restraint, push the adjustment button, located at the base of the head restraint, and push downward on the head restraint.

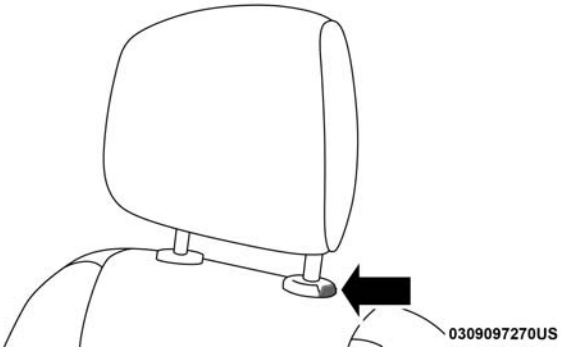

Adjustment Button

For comfort, the Active Head Restraints can be tilted forward and backward. To tilt the head restraint closer to the back of your head, pull forward on the bottom of the head restraint. Push rearward on the bottom of the head restraint to move the head restraint away from your head.

Active Head Restraint (Normal Position)

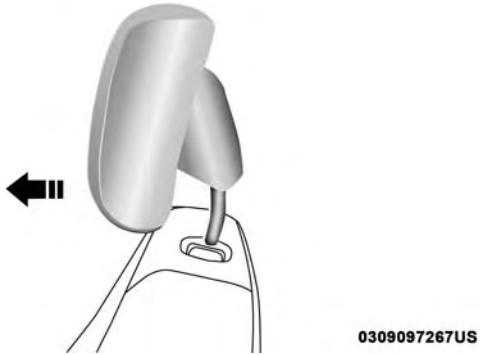

Active Head Restraint (Tilted)

NOTE:

- The head restraints should only be removed by qualified technicians, for service purposes only. If either of the head restraints require removal, see your authorized dealer.
- In the event of deployment of an Active Head Restraint, refer to “Occupant Restraints/Supplemental Active Head Restraints (AHR)/Resetting Active Head Restraints (AHR)” in “Safety” for further information.

WARNING!

- **All occupants, including the driver, should not operate a vehicle or sit in a vehicle's seat until the head restraints are placed in their proper positions in order to minimize the risk of neck injury in the event of a collision.**
- **Do not place items over the top of the Active Head Restraint, such as coats, seat covers or portable DVD players. These items may interfere with the operation of the Active Head Restraint in the event of a collision and could result in serious injury or death.**
- **Active Head Restraints may be deployed if they are struck by an object such as a hand, foot or loose cargo. To avoid accidental deployment of the Active Head Restraint ensure that all cargo is secured, as loose cargo could contact the Active Head Restraint during sudden stops. Failure to follow this warning could cause personal injury if the Active Head Restraint is deployed.**

Rear Head Restraint Adjustment

The second row seats are equipped with adjustable and removable head restraints. To raise the head restraint, pull upward on the head restraint. To lower the head restraint, push the adjustment button located on the base of the head restraint, and push downward on the head restraint.

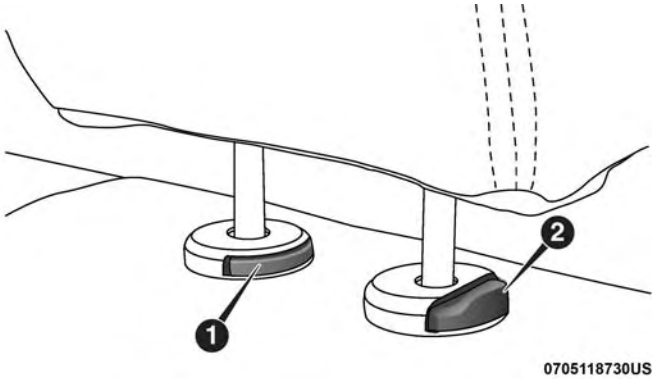

Rear Head Restraint

1 — Release Button
2 — Adjustment Button

WARNING!

A loose head restraint thrown forward in a collision or hard stop could cause serious injury or death to occupants of the vehicle. Always securely stow removed head restraints in a location outside the occupant compartment.

Rear Head Restraint Removal

To remove the head restraint, push the adjustment and the release buttons while pulling upward on the whole assembly and raise it up as far as it can go. To reinstall the headrest, put the headrest posts into the holes while pushing the release buttons. Then adjust it to the appropriate height.

WARNING!

ALL the head restraints MUST be reinstalled in the vehicle to properly protect the occupants. Follow the re-installation instructions above prior to operating the vehicle or occupying a seat.

NOTE: For proper routing of a Child Seat Tether, refer to "Occupant Restraints" in "Safety".

WARNING!

Driving a vehicle with the head restraints removed or improperly adjusted could cause serious injury or death in the event of a collision. The head restraints should be checked prior to operating the vehicle and never adjusted while the vehicle is in motion.

STEERING WHEEL

Tilt/Telescoping Steering Column

This feature allows you to tilt the steering column upward or downward. It also allows you to lengthen or shorten the steering column. The tilt/telescoping control handle is located below the steering wheel at the end of the steering column.

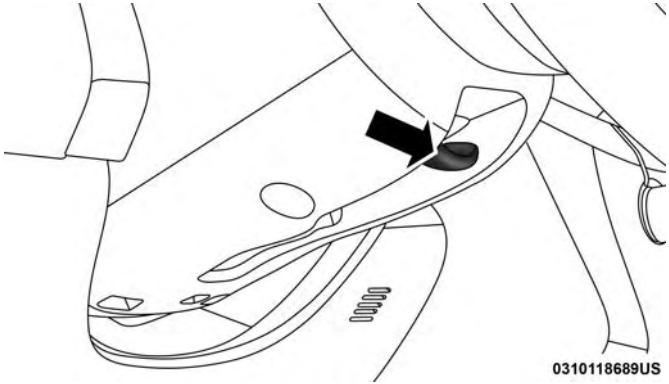

Tilt/Telescoping Steering Control Handle

To unlock the steering column, push the control handle downward. To tilt the steering column, move the steering wheel upward or downward as desired. To lengthen or shorten the steering column, pull the steering wheel outward or push it inward as desired. To lock the steering column in position, pull the control handle upward until fully engaged.

WARNING!

Do not adjust the steering column while driving. Adjusting the steering column while driving or driving with the steering column unlocked, could cause the driver to lose control of the vehicle. Failure to follow this warning may result in serious injury or death.

Heated Steering Wheel — If Equipped

The steering wheel contains a heating element that helps warm your hands in cold weather. The heated steering wheel has only one temperature setting. Once the heated steering wheel has been turned on, it will stay on for an average of 80 minutes or more before automatically shutting off. This time will vary based on environmental temperatures. The heated steering wheel can shut off early or may not turn on when the steering wheel is already warm.

The heated steering wheel control button is located within the Uconnect system. You can gain access to the control button through the climate screen or the controls screen.

- Press the heated steering wheel button once to turn the heating element on.
- Press the heated steering wheel button a second time to turn the heating element off.

If your vehicle is equipped with automatic temperature controls with an integrated center stack, or manual temperature controls, you'll find the heated steering wheel switch on the switch bank below the radio screen.

NOTE: The engine must be running for the heated steering wheel to operate.

Vehicles Equipped With Remote Start

On models that are equipped with remote start, the heated steering wheel can be programmed to come on during a remote start through the Uconnect system. Refer to "Uconnect Settings" in "Multimedia" for further information.

WARNING!

- **Persons who are unable to feel pain to the skin because of advanced age, chronic illness, diabetes, spinal cord injury, medication, alcohol use, exhaustion, or other physical conditions must exercise care when using the steering wheel heater. It may cause burns even at low temperatures, especially if used for long periods.**
- **Do not place anything on the steering wheel that insulates against heat, such as a blanket or steering wheel covers of any type and material. This may cause the steering wheel heater to overheat.**

MIRRORS

Inside Day/Night Mirror — If Equipped

The mirror head can be adjusted up, down, left, and right for various drivers. The mirror should be adjusted to center on the view through the rear window.

Headlight glare from vehicles behind you can be reduced by moving the small control under the mirror to the night position (toward the rear of the vehicle). The mirror should be adjusted while set in the day position (toward the windshield).

NOTE: A single ball joint mirror is provided in the vehicle. It is a twist on mirror that has a fixed position at the windshield. The mirror installs on the windshield button with a counterclockwise rotation and requires no tools for mounting. The mirror head can be adjusted left and right and tilted up and down for various drivers. The mirror should be adjusted to center on the view through the rear window.

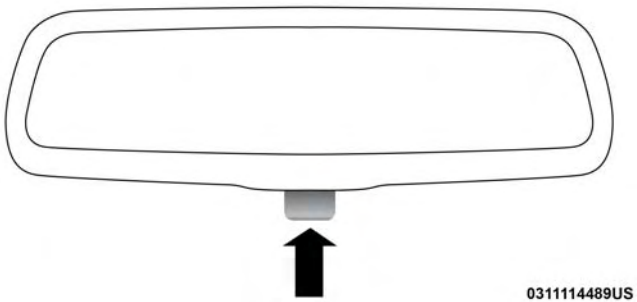

Adjusting Rearview Mirror

Electrochromic Mirror — If Equipped

A single ball joint mirror is provided in the vehicle. It is a twist on mirror that has a fixed position at the windshield. The mirror installs on the windshield button with a counterclockwise rotation and requires no tools for mounting. The mirror head can be adjusted up, down, left, and right for various drivers. The mirror should be adjusted to center on the view through the rear window.

This mirror automatically adjusts for headlight glare from vehicles behind you.

NOTE:

- The Automatic Dimming Mirror feature is disabled when the vehicle is in REVERSE to improve rear view viewing.
- The Automatic Dimming Mirror feature can be turned on or off using the Uconnect System. Refer to “Uconnect Settings” in “Multimedia” for further information.

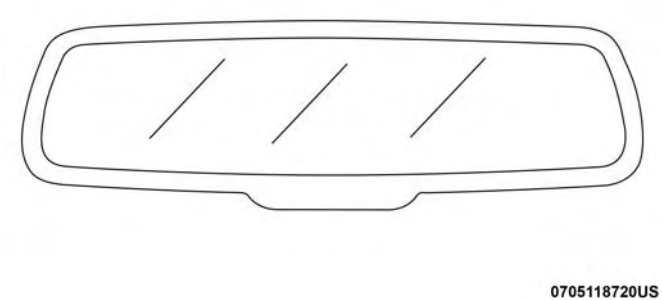

Automatic Dimming Mirror

CAUTION!

To avoid damage to the mirror during cleaning, never spray any cleaning solution directly onto the mirror. Apply the solution onto a clean cloth and wipe the mirror clean.

Outside Mirrors

To receive maximum benefit, adjust the outside mirrors to center on the adjacent lane of traffic and a slight overlap of the view obtained from the inside mirror.

NOTE: The passenger side convex outside mirror will give a much wider view to the rear, and especially of the lane next to your vehicle.

WARNING!

Vehicles and other objects seen in the passenger side convex mirror will look smaller and farther away than they really are. Relying too much on your passenger side convex mirror could cause you to collide with another vehicle or other object. Use your inside mirror when judging the size or distance of a vehicle seen in the passenger side convex mirror.

Outside Mirrors Folding Feature

All outside mirrors are hinged and may be moved either forward or rearward to resist damage. The hinges have three detent positions:

- Full forward position
- Full rearward position
- Normal position

Interior Observation Mirror

The convex interior observation mirror provides the driver and front seat passenger a wide field of view to conveniently view passengers sitting in the rear passenger seats. To use the interior observation mirror, push on the raised bars on the compartment door and release (the door will swing downward), then raise the door until it is almost closed and release. The door will latch in position to use the interior observation mirror.

NOTE: From the "observation mirror" position, the door can only be closed.

To return to the full open position, the door must first be closed and then opened by pushing the latch again to release.

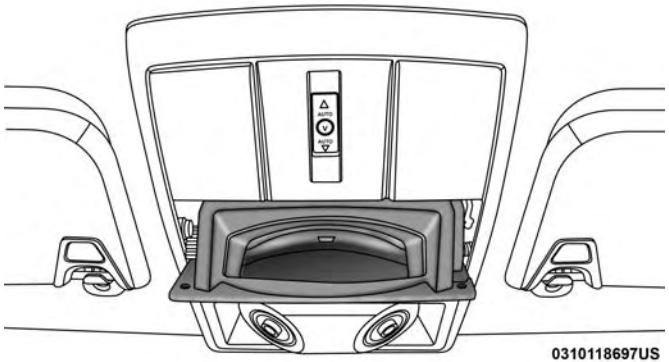

Observation Mirror

Power Mirrors

The power mirror switch is located on the driver's door trim panel.

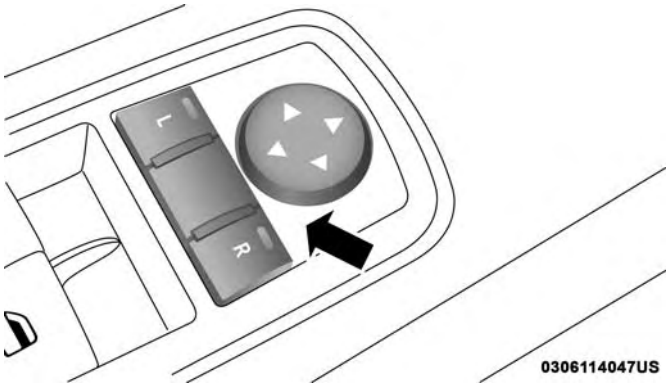

Power Mirror Switches

Models Without Express Window Feature

Push the mirror select button marked L (left) or R (right). Then, push one of the four arrow buttons to move the mirror in the direction the arrow is pointing.

Models With Express Window Feature

Push and release the mirror select button marked L (left) or R (right). Then, push one of the four arrow buttons to move the mirror in the direction the arrow is pointing. The selection times out after 30 seconds of inactivity in order to guard against accidentally changing a mirror position following an adjustment.

NOTE: A light in the selected button will illuminate indicating the mirror is activated and can be adjusted.

Heated Mirrors — If Equipped

These mirrors are heated to melt frost or ice. This feature will be activated whenever you turn on the rear window defroster (if equipped). Refer to "Climate Controls" in this section for further information.

Power Folding Mirrors — If Equipped

The switch for the power folding mirrors is located between the power mirror switches L (left) and R (right). Push the switch once and the mirrors will fold in, pushing the switch a second time will return the mirrors to the normal driving position.

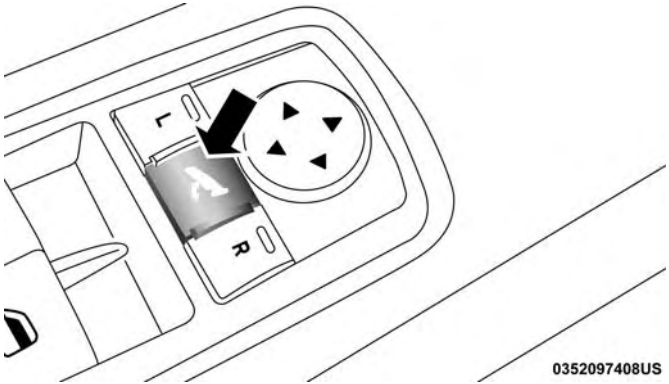

Power Folding Mirror Switch

NOTE: If the vehicle speed is greater than 10 mph (16 km/h), the folding feature will be disabled.

If the mirrors are in the folded position, and vehicle speed is equal or greater than 10 mph (16 km/h), they will automatically unfold.

Resetting The Power Folding Outside Mirrors

You may need to reset the power folding mirrors if the following occurs:

- The mirrors are accidentally blocked while folding.
- The mirrors are accidentally manually folded/unfolded.
- The mirrors come out of the unfolded position.
- The mirrors shake and vibrate at normal driving speeds.

To reset the power folding mirrors: fold and unfold them by pushing the button. (this may require multiple button pushes). This resets them to their normal position.

Illuminated Vanity Mirrors — If Equipped

An illuminated vanity mirror is on each sun visor. To use the mirror, rotate the sun visor downward and swing the mirror cover upward. The light will turn on automatically. Closing the mirror cover will turn off the light.

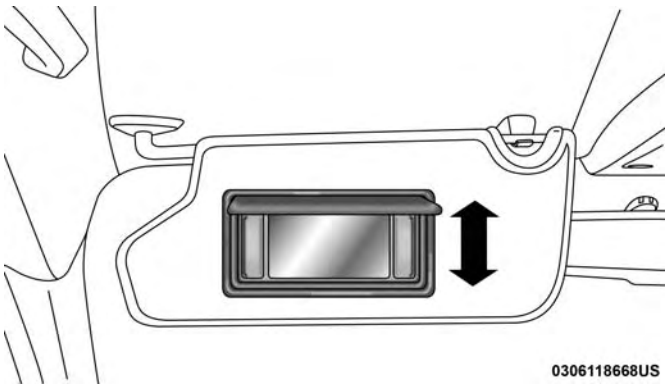

Illuminated Vanity Mirror

Sun Visor "Slide-On-Rod" Feature — If Equipped

The sun visor "Slide-On-Rod" feature allows for additional flexibility in positioning the sun visor to block out the sun.

1. Fold down the sun visor.
2. Unclip the visor from the center clip.
3. Pull the sun visor toward the inside rearview mirror to extend it.

EXTERIOR LIGHTS

Multifunction Lever

The multifunction lever controls the operation of the turn signals, headlight beam selection and passing lights. The multifunction lever is located on the left side of the steering column.

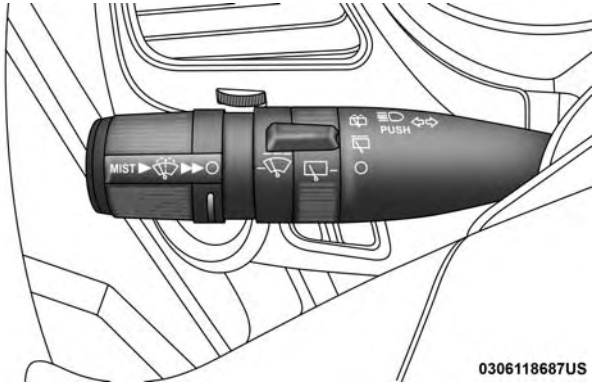

Multifunction Lever

Headlights

The headlight switch is located on the left side of the instrument panel. This switch controls the operation of the headlights, parking lights, instrument panel lights, instrument panel light dimming, interior lights and fog lights.

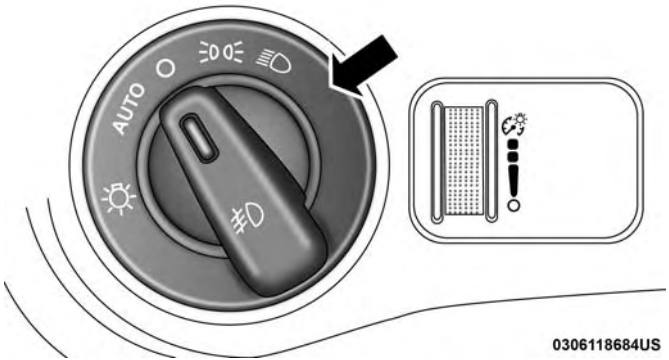

Headlight Switch

Rotate the headlight switch clockwise to the first detent for parking lights and instrument panel light operation. Rotate the headlight switch to the second detent for headlight, parking light and instrument panel light operation.

Daytime Running Lights (DRL)

The Daytime Running Lights will turn on the first time the vehicle is shifted out of PARK, and remain on unless the parking brake is applied. Upon returning to the PARK position, the DRLs will turn off. DRLs will turn off when the ignition is switched off.

NOTE: The daytime running lights can be turned on and off using the Uconnect System, refer to "Uconnect Settings" in "Multimedia" for further information.

High Beam/Low Beam Select Switch

Pull the multifunction lever toward you to switch the headlights to high beam. Pull the lever a second time to switch the headlights back to low beam.

Flash-To-Pass

You can signal another vehicle with your headlights by lightly pulling the multifunction lever toward you. This will cause the high beam headlights to turn on, and remain on, until the lever is released.

Automatic Headlights

This system automatically turns the headlights on or off according to ambient light levels. To turn the system on, rotate the headlight switch counterclockwise to the AUTO position. When the system is on, the headlight time delay feature is also on. This means the headlights will stay on for up to 90 seconds after you place the ignition into the OFF position. The headlight time delay can be programmed 0/30/60/90 seconds.

Refer to “Uconnect Settings” in “Multimedia” for further information.

To turn the automatic system off, move the headlight switch out of the AUTO position.

NOTE: The engine must be running before the headlights will come on in the automatic mode.

Headlights On With Wipers (Available With Automatic Headlights Only)

When this feature is active, the headlights will turn on after the wipers are turned on if the headlight switch is placed in the AUTO position and programmable feature is set to ON. In addition, the headlights will turn off when the wipers are turned off if they were turned on by this feature.

NOTE: The Headlights On with Wipers feature can be turned on or off using the Uconnect System. Refer to “Uconnect Settings” in “Mutimedia” for further information.

Headlight Time Delay

This feature provides the safety of headlight illumination for up to 90 seconds when leaving your vehicle in an unlit area.

To activate the delay feature, turn OFF the ignition switch while the headlights are still on. Then, turn off the headlights within 45 seconds. The delay interval begins when the headlight switch is turned off.

NOTE: The lights must be turned off within 45 seconds of turning the ignition OFF to activate this feature.

If you turn the headlights, parking lights or ignition switch ON again, the system will cancel the delay.

If you turn the headlights off before the ignition, they will turn off in the normal manner.

NOTE: The Headlight Time Delay is programmable using the Uconnect System, refer to “Uconnect Settings” in “Multimedia” for further information.

Lights-On Reminder

If the headlights or parking lights are on after the ignition is in the OFF position, a chime will sound to alert the driver when the driver’s door is opened.

Fog Lights — If Equipped

The front fog light switch is built into the headlight switch.

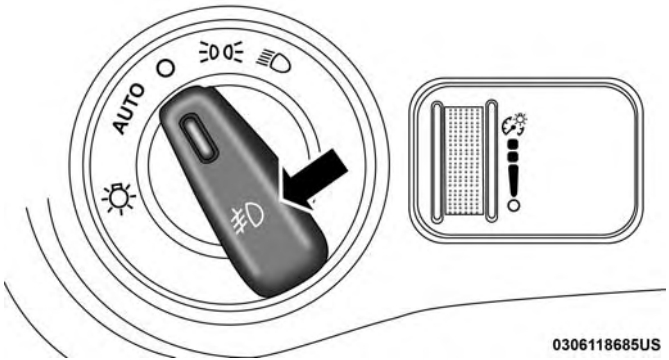

Fog Light Switch

To activate the front fog lights, turn on the parking lights or the low beam headlights and push the headlight switch. To turn off the front fog lights, either push the headlight switch a second time or turn off the headlight switch.

An indicator light in the instrument cluster illuminates when the fog lights are turned on.

NOTE: The fog lights will operate when the low beam headlights or parking lights are on. However, selecting the high beam headlights will turn off the fog lights.

Turn Signals

Move the multifunction lever up or down and the arrows on each side of the instrument cluster display flash to show proper operation of the front and rear turn signal lights.

NOTE:

- If either light remains on and does not flash, or there is a very fast flash rate, check for a defective outside light bulb. If an indicator fails to light when the lever is moved, it would suggest that the indicator bulb is defective.
- A “Turn Signal On” message will appear in the instrument cluster display and a continuous chime will sound if the vehicle is driven more than 1 mile (1.6 km) with either turn signal on.

Lane Change Assist — If Equipped

Tap the lever up or down once, without moving beyond the detent, and the turn signal (right or left) will flash three times then automatically turn off.

INTERIOR LIGHTS

Courtesy/Interior Lighting

The interior lights come on when a door is opened.

To protect the battery, the interior lights will turn off automatically 10 minutes after the ignition is moved to the LOCK position. This will occur if the interior lights were switched on manually or are on because a door is open. The Battery Protection also includes the glove compartment light. To restore interior light operation after automatic battery protection is enabled (Lights off), either place the ignition in the ON/RUN position or cycle the light switch.

Front Lights

The overhead console has two courtesy lights. The lights turn on when a front door, a rear door or the liftgate is opened. If your vehicle is equipped with Remote Keyless Entry the lights will also turn on when the unlock button on the key fob is pushed. The courtesy lights also function as reading lights. Push in on each lens to turn these lights on while inside the vehicle. Push the lens a second time to turn each light off. You may adjust the direction of these lights by pushing the outside ring, which is identified with four directional arrows.

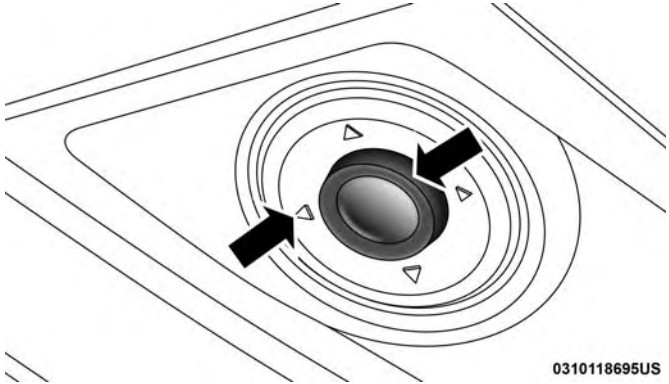

Courtesy/Reading Light

Rear Dome Light

Rotate the instrument panel dimmer control completely upward to the second detent to turn on the interior lights. The interior lights will remain on when the dimmer control is in this position.

Rotate the dimmer control downward to the last detent (off position). The interior lights will remain off when the doors are open.

Parade Mode (Daytime Brightness Feature)

Rotate the dimmer control upward to the first detent. This feature brightens all text displays such as the odometer, instrument cluster display, and radio when the parking lights or headlights are on.

WIPERS AND WASHERS

The windshield wiper/washer control lever is located on the left side of the steering column.

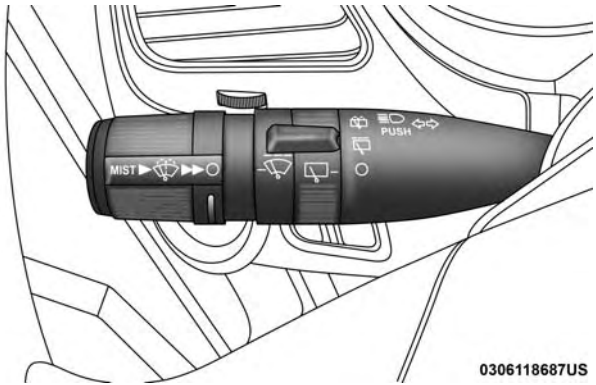

Windshield Wiper/Washer Lever

The front wipers are operated by rotating a switch, located at the end of the lever. For information on using the rear window wiper/washer, refer to "Rear Wiper Operation" in this section.

Windshield Wiper Operation

Rotate the end of the lever upward, to the first detent past the intermittent settings for low-speed wiper operation. Rotate the end of the lever upward to the second detent past the intermittent settings for high-speed wiper operation.

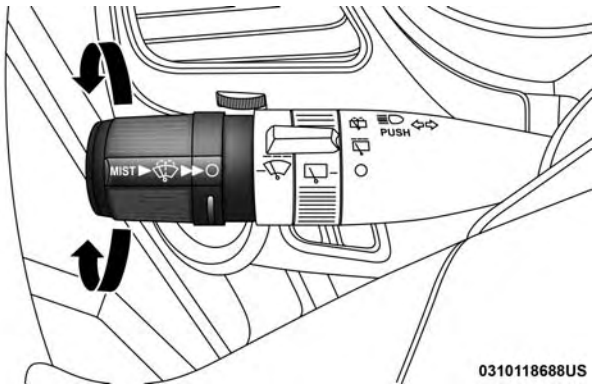

Front Wiper Control

NOTE: The wipers will automatically return to the "park" position if you turn OFF the ignition switch while they are operating. The wipers will resume operation when you turn the ignition switch back to the ON position.

CAUTION!

- **Turn the windshield wipers off when driving through an automatic car wash. Damage to the windshield wipers may result if the wiper control is left in any position other than off.**
- **In cold weather, always turn off the wiper switch and allow the wipers to return to the park position before turning off the engine. If the wiper switch is left on and the wipers freeze to the windshield, damage to the wiper motor may occur when the vehicle is restarted.**
- **Always remove any buildup of snow that prevents the windshield wiper blades from returning to the off position. If the windshield wiper control is turned off and the blades cannot return to the off position, damage to the wiper motor may occur.**

Intermittent Wiper System

Use the intermittent wiper system when weather conditions make a single wiping cycle, with a variable pause between cycles, desirable. Rotate the end of the windshield wiper/washer control lever to one of the first five detents to select the desired delay interval.

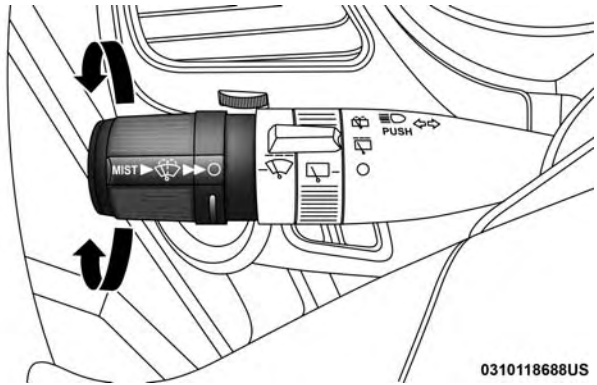

Front Wiper Control

There are five delay settings, which allow you to regulate the wipe interval from a minimum of one cycle every two seconds to a maximum of approximately 36 seconds between cycles at vehicle speeds below 10 mph (16 km/h). At speeds greater than 10 mph (16 km/h), the delay varies from a minimum of one cycle every second to a maximum of approximately 18 seconds between cycles.

NOTE: The wiper delay times depend on vehicle speed. If the vehicle is moving less than 10 mph (16 km/h), delay times will be doubled.

Windshield Washers

To use the windshield washer, push the washer knob, located on the end of the multifunction lever, inward to the second detent.

If you activate the washer while the wiper control is in the delay range, the wipers will operate in low-speed for two or three wipe cycles after releasing the lever and then resume the intermittent interval previously selected.

If you activate the washer while the wiper control is in the off position, the wipers will operate for two or three wipe cycles and then turn off.

WARNING!

Sudden loss of visibility through the windshield could lead to a collision. You might not see other vehicles or other obstacles. To avoid sudden icing of the windshield during freezing weather, warm the windshield with the defroster before and during windshield washer use.

Mist Feature

Push the washer knob, located on the end of the multifunction lever, inward to the first detent to activate a single wipe cycle to clear the windshield of road mist or spray from a passing vehicle. The wipers will continue to operate until you release the lever.

NOTE: The mist feature does not activate the washer pump; therefore, no washer fluid will be sprayed on the windshield. The wash function must be used in order to spray the windshield with washer fluid.

Rear Window Wiper/Washer

The rear window wiper/washer control is located on the left side of the steering column.

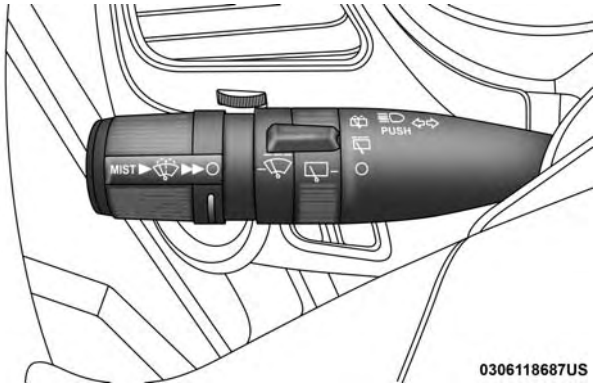

Rear Wiper/Washer

Rotate the switch upward to the first detent position for rear wiper operation.

Rotate the switch upward past the first detent position to activate the rear washer. The washer pump will continue to operate as long as the switch is held. Upon release, the wiper will cycle three times before returning to the set position.

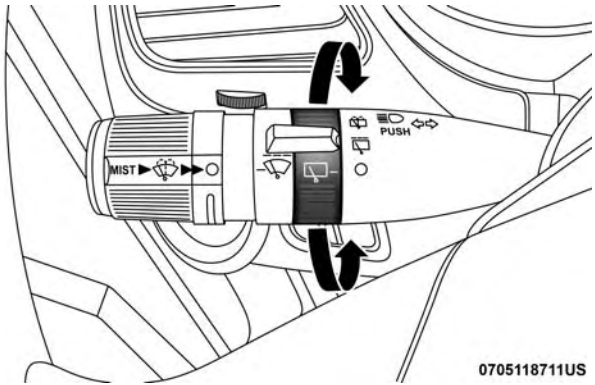

Rear Wiper/Washer Control

If the rear wiper is operating when the ignition is turned to the LOCK position, the wiper will automatically return to the "park" position. When the vehicle is restarted, the wiper will resume function at whichever position the switch is set at.

CAUTION!

- **Turn the windshield wipers off when driving through an automatic car wash. Damage to the windshield wipers may result if the wiper control is left in any position other than off.**

(Continued)

CAUTION! ***(Continued)***

- **In cold weather, always turn off the wiper switch and allow the wipers to return to the park position before turning off the engine. If the wiper switch is left on and the wipers freeze to the windshield, damage to the wiper motor may occur when the vehicle is restarted.**
- **Always remove any buildup of snow that prevents the windshield wiper blades from returning to the off position. If the windshield wiper control is turned off and the blades cannot return to the off position, damage to the wiper motor may occur.**

CLIMATE CONTROLS

The air conditioning and heating system is designed to make you comfortable in all types of weather. This system can be operated through either the instrument panel or through the Uconnect system display.

When the Uconnect system is in different modes (Radio, Player, Settings, More, etc.) the driver and passenger temperature settings will be indicated at the top of the display.

Manual Climate Control Overview

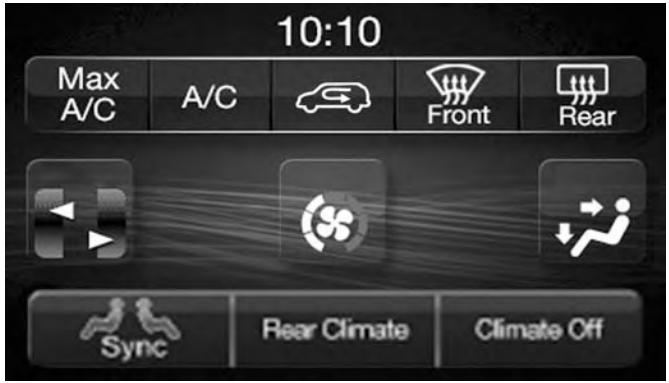

Radio 4.3 Manual 3 Zone Temperature Controls

Uconnect 3/3 NAV with 8.4–inch display Manual Dual Zone Temperature Controls

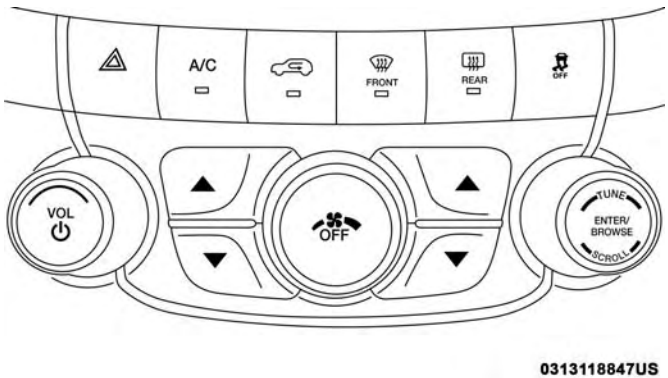

Manual Temperature Controls — Buttons On The Faceplate

Manual Climate Control Descriptions

Icon	Description
MAX A/C	**MAX A/C Button** Press to change the current setting, the indicator illuminates when MAX A/C is on. Pressing the button again turns the MAX A/C operation to switch into manual mode and the MAX A/C indicator turn offs.
Faceplate Knob OFF **Touchscreen Buttons**	**Blower Control** Blower Control is used to regulate the amount of air forced through the climate system. There are seven blower speeds available. The speeds can be selected using either the blower control knob on the faceplate or the buttons on the touchscreen. • **Faceplate:** The blower speed increases as you turn the blower control knob clockwise from the lowest blower setting. The blower speed decreases as you turn the blower control knob counterclockwise. • **Touchscreen:** Use the small blower icon to reduce the blower setting and the large blower icon to increase the blower setting. The blower can also be selected by pressing the blower bar area between the icons.
	Temperature Control Provides the driver and passenger with independent temperature control. Push the red button on the faceplate or touchscreen or press and slide the temperature bar towards the red arrow button on the touchscreen for warmer temperature settings. Push the blue button on the faceplate or touchscreen or press and slide the temperature bar towards the blue arrow button on the touchscreen for cooler temperature settings.

Icon	Description
SYNC	**SYNC Button — If Equipped** Press the SYNC button on the touchscreen to toggle the SYNC feature on/off. The SYNC indicator is illuminated when this feature is enabled. SYNC is used to synchronize the rear passenger temperature setting with the driver temperature setting. The SYNC feature also synchronizes the front passenger's temperature to the driver temperature setting. Changing the rear passenger temperature setting while in SYNC will automatically exit this feature.
REAR CLIMATE	**Rear Climate Control Button** Press and release this button to access the rear climate controls. The indicator will illuminate when the rear climate controls are ON.
Panel Mode	**Panel Mode** Air comes from the outlets in the instrument panel. Each of these outlets can be individually adjusted to direct the flow of air. The air vanes of the center outlets and outboard outlets can be moved up and down or side to side to regulate airflow direction. There is a shut off wheel located below the air vanes to shut off or adjust the amount of airflow from these outlets.
Bi-Level Mode	**Bi-Level Mode** Air comes from the instrument panel outlets and floor outlets. A slight amount of air is directed through the defrost and side window demister outlets. **NOTE:** Bi-Level mode is designed under comfort conditions to provide cooler air out of the panel outlets and warmer air from the floor outlets.

Icon	Description
Floor Mode	**Floor Mode** Air comes from the floor outlets. A slight amount of air is directed through the defrost and side window demister outlets.
Mix Mode	**Mix Mode** Air is directed through the floor, defrost, and side window demister outlets. This setting works best in cold or snowy conditions that require extra heat to the windshield. This setting is good for maintaining comfort while reducing moisture on the windshield.
A/C	**A/C Button** Press and release to change the current setting, the indicator illuminates when A/C is on.
	Recirculation Button Push and release this button to change the system between recirculation mode and outside air mode. Recirculation can be used when outside conditions such as smoke, odors, dust, or high humidity are present. **NOTE:** • Continuous use of the Recirculation mode may make the inside air stuffy and window fogging may occur. Extended use of this mode is not recommended. • The use of the Recirculation mode in cold or damp weather could cause windows to fog on the inside, because of moisture buildup inside the vehicle. Select the outside air position for maximum defogging.

Icon	Description
	• Recirculation can be used in all modes except for Defrost. • The A/C can be deselected manually without disturbing the mode control selection.
FRONT	**Front Defrost Setting** Turn the Mode Control knob to the Front Defrost position. Air comes from the windshield and side window demist outlets. When the defrost setting is selected, the blower level will increase. Use Defrost mode with maximum temperature settings for best windshield and side window defrosting and defogging.
REAR	**Rear Defrost Button** Push and release the Rear Defrost Control button to turn on the rear window defroster and the heated outside mirrors (if equipped). An indicator will illuminate when the rear window defroster is on. The rear window defroster automatically turns off after ten minutes.
OFF	**Climate Control OFF Button** Press and release this button to turn the Climate Controls off.

Economy Mode

If ECONOMY mode is desired, push the A/C button to turn off the LED indicator and the A/C compressor. Rotate the temperature control knob to the desired temperature. Also, make sure to select only Panel, Bi-Level, or Floor modes.

Stop/Start System — If Equipped

While in an Autostop, the Climate Controls system may automatically adjust airflow to maintain cabin comfort. Customer settings will be maintained upon return to an engine running condition.

Controlling The Rear Climate Controls From The Front MTC Panel

The rear MTC system has floor air outlets at the rear right side of the 3rd Row seats and overhead outlets at each outboard rear seating position. The system provides heated air through the floor outlets or cool, dehumidified air through the headliner outlets.

The rear system temperature control buttons on the touch-screen are located in the Uconnect touch system, located on the instrument panel.

The Three-Zone climate control system allows for adjustment of the rear climate controls from the front climate panel.

To change the rear system settings:

- Press the "REAR CLIMATE" button to change control to rear control mode, Rear display (below) will appear. Control functions now operate rear system.
- To return to Front screen, press the "FRONT CLIMATE" button.

Rear Lock

- Pressing the Rear Temperature Lock button on the touchscreen on the Uconnect touchscreen, illuminates a lock symbol in the rear display. The rear temperature and air source are controlled from the front Uconnect system.
- Rear occupants can only adjust the rear control when the Rear Temperature Lock button is turned off.
- The rear Manual Temperature Control (MTC) is located in the headliner, near the center of the vehicle.

Radio 4.3 Manual Rear Climate Controls

Uconnect 3/3 NAV Manual Rear Climate Controls

Icon	Description
LOCK REAR	**Rear Lock Button** Press and release to lock out the rear manual temperature controls from adjusting the rear temperature and blower settings.
FRONT CLIMATE	**Front Climate Button** Press and release this button to change the display on the Uconnect radio back to the Front Climate Controls.
▲ ▼	**Rear Passenger Temperature Up and Down Buttons** Provides the rear passengers with independent temperature control. Push the up arrow button on the touchscreen to increase the temperature. Push the down arrow button on the touchscreen to decrease the temperature. When the SYNC feature is active, the passenger's temperature will move up and down with the driver's temperature.
▲ ▼	**Blower Control** Blower Control is used to regulate the amount of air forced through the climate system. There are seven blower speeds available. Adjusting the blower will cause automatic mode to switch to manual operation. The speeds can be selected using the buttons on the touchscreen.
REAR OFF	**Rear Passenger Climate Control OFF Button** Press and release this button to turn the Rear Climate Controls off.

Icon	Description
Panel Mode	**Panel Mode** Press this button on the touchscreen to change the air distribution mode to Panel Mode. In Panel Mode, air comes from the outlets in the instrument panel. Each of these outlets can be individually adjusted to direct the flow of air. The air vanes of the center outlets and outboard outlets can be moved up and down or side to side to regulate airflow direction. There is a shut off wheel located below the air vanes to shut off or adjust the amount of airflow from these outlets.
Bi-Level Mode	**Bi-Level Mode** Press this button on the touchscreen to change the air distribution mode to Bi-Level Mode. In Bi-Level Mode, air comes from the instrument panel outlets and floor outlets. A slight amount of air is directed through the defrost and side window demister outlets. **NOTE:** Bi-Level mode is designed under comfort conditions to provide cooler air out of the panel outlets and warmer air from the floor outlets.
Floor Mode	**Floor Mode** Press this button on the touchscreen to change the air distribution mode to Floor Mode. In Floor Mode, air comes from the floor outlets. A slight amount of air is directed through the defrost and side window demister outlets.

Rear Manual Temperature Control

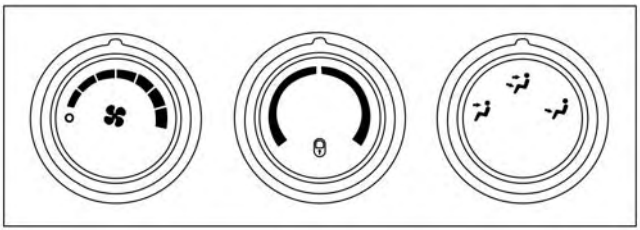

0313118841US

Rear MTC Control Knobs

Icon	Description
Panel Mode	**Panel Mode** Air comes from the outlets in the headliner. Each of these outlets can be individually adjusted to direct the flow of air. Moving the air vanes of the outlets to one side will shut off the airflow.

Icon	Description
Bi-Level Mode	**Bi-Level Mode** Air comes from both the headliner outlets and the floor outlets. **NOTE:** In many temperature positions, the Bi-Level mode is designed to provide cooler air out of the headliner outlets and warmer air from the floor outlets.
Floor Mode	**Floor Mode** Air comes from the floor outlets.
	Rear Temperature Control Knob To change the temperature in the rear of the vehicle, turn the Temperature Control Knob. Turn it to the right to raise the temperature, or turn it to the left to lower the temperature. The rear temperature settings are displayed in control head. When rear controls are locked by the front system, the Rear Temperature Lock symbol on the control head is illuminated and any rear overhead adjustments are ignored.
	Rear Blower Control Knob The rear blower control can be manually set to off, or any fixed blower speed by rotating the Blower Control Knob in the rear of the vehicle. This allows the rear seat occupants to control the volume of air circulated in the rear of the vehicle.

Automatic Climate Controls Overview

Radio 4.3 Automatic 3 Zone Temperature Controls

Uconnect 3/3 NAV Automatic 3 Zone Temperature Controls

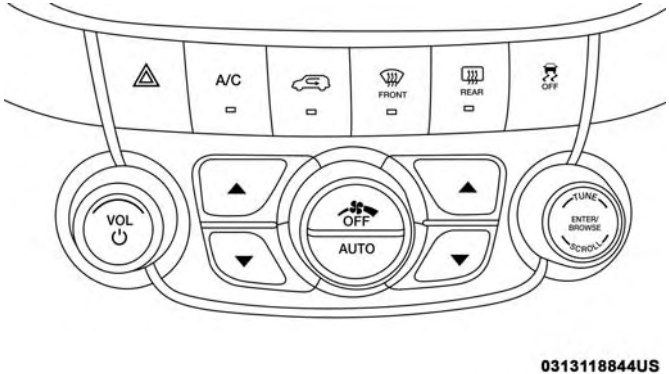

Automatic Temperature Controls — Buttons On The Faceplate

Automatic Climate Controls Descriptions

Icon	Description
MAX A/C	**MAX A/C Button** Press to change the current setting, the indicator illuminates when MAX A/C is on. Pressing it again turns the MAX A/C operation to switch into manual mode and the MAX A/C indicator turns off.
A/C	**A/C Button** Press and release to change the current setting. The indicator illuminates when A/C is on.

Icon	Description
	Recirculation Button Press and release this button on the touchscreen, or push the button on the faceplate, to change the system between recirculation mode and outside air mode. Recirculation can be used when outside conditions such as smoke, odors, dust, or high humidity are present. Recirculation can be used in all modes. The A/C can be deselected manually without disturbing the mode control selection. Continuous use of the Recirculation mode may make the inside air stuffy and window fogging may occur. Extended use of this mode is not recommended.
AUTO	**AUTO Button** Automatically controls the interior cabin temperature by adjusting airflow distribution and amount. Toggling this function will cause the system to switch between manual mode and automatic modes. Refer to "Automatic Operation" for more information.
FRONT	**Front Defrost Button** The Front Defrost button changes the current airflow setting to Defrost mode. The indicator illuminates when this feature is on. Air comes from the windshield and side window demist outlets. When the defrost button is selected, the blower level may increase. Use Defrost mode with maximum temperature settings for best windshield and side window defrosting and defogging. When toggling the front defrost mode button, the climate system will return to previous setting.
REAR	**Rear Defrost Button** The Rear Defrost Control button turns on the rear window defroster and the heated outside mirrors (if equipped). An indicator will illuminate when the rear window defroster is on. The rear window defroster automatically turns off after ten minutes.

Icon	Description
REAR CLIMATE	**Rear Climate Control Button** Press and release this button to access the rear climate controls. The indicator will illuminate when the rear climate controls are ON.
△ ▽	**Driver And Passenger Temperature Up And Down Buttons** Provides the driver and passenger with independent temperature control. Push the red button on the faceplate or touchscreen or press and slide the temperature bar towards the red arrow button on the touchscreen for warmer temperature settings. Push the blue button on the faceplate or touchscreen or press and slide the temperature bar towards the blue arrow button on the touchscreen for cooler temperature settings.
SYNC	**SYNC Button** Press the SYNC button on the touchscreen to toggle the SYNC feature on/off. The SYNC indicator is illuminated when this feature is enabled. SYNC is used to synchronize the passenger temperature setting with the driver temperature setting. Changing the passenger's temperature setting while in SYNC will automatically exit this feature.

Icon	Description
Faceplate Knob **Touchscreen Buttons** 	**Blower Control** Blower Control is used to regulate the amount of air forced through the climate system. There are seven blower speeds available. The speeds can be selected using either the blower control knob on the faceplate or the buttons on the touchscreen. • **Faceplate:** The blower speed increases as you turn the blower control knob clockwise from the lowest blower setting. The blower speed decreases as you turn the blower control knob counterclockwise. • **Touchscreen:** Use the small blower icon to reduce the blower setting and the large blower icon to increase the blower setting. The blower can also be selected by pressing the blower bar area between the icons.
Panel Mode 	**Panel Mode** Air comes from the outlets in the instrument panel. Each of these outlets can be individually adjusted to direct the flow of air. The air vanes of the center outlets and outboard outlets can be moved up and down or side to side to regulate airflow direction. There is a shut off wheel located below the air vanes to shut off or adjust the amount of airflow from these outlets.
Bi-Level Mode 	**Bi-Level Mode** Air comes from the instrument panel outlets and floor outlets. A slight amount of air is directed through the defrost and side window demister outlets. **NOTE:** Bi-Level mode is designed under comfort conditions to provide cooler air out of the panel outlets and warmer air from the floor outlets.

Icon	Description
Floor Mode	**Floor Mode** Air comes from the floor outlets. A slight amount of air is directed through the defrost and side window demister outlets.
Mix Mode	**Mix Mode** Air is directed through the floor, defrost, and side window demister outlets. This setting works best in cold or snowy conditions that require extra heat to the windshield. This setting is good for maintaining comfort while reducing moisture on the windshield.
OFF	**Climate Control OFF Button** This button turns the Climate Control System off.

CAUTION!

Failure to follow these cautions can cause damage to the heating elements:

- **Use care when washing the inside of the rear window. Do not use abrasive window cleaners on the interior surface of the window. Use a soft cloth and a mild washing solution, wiping parallel to the heating elements. Labels can be peeled off after soaking with warm water.**
- **Do not use scrapers, sharp instruments, or abrasive window cleaners on the interior surface of the window.**
- **Keep all objects a safe distance from the window.**

Controlling The Rear Climate Controls From The Front ATC Panel

The rear ATC system has floor air outlets at the rear right side of the 3rd Row seats and overhead outlets at each outboard rear seating position. The system provides heated air through the floor outlets or cool, dehumidified air through the headliner outlets. The rear system temperature control buttons are located in the Uconnect system, located on the instrument panel.

The Three-Zone ATC system allows for adjustment of the rear climate controls from the front ATC panel. To change the rear system settings:

- Press the "REAR CLIMATE" button to change control to rear control mode, Rear display (below) will appear. Control functions now operate rear system.

- To return to Front screen, press the "FRONT CLIMATE" button.

Uconnect 4.3 Automatic Rear Climate Buttons On The Touchscreen

Uconnect 3/3 NAV Automatic Rear Climate Buttons On The Touchscreen

Icon	Description
REAR AUTO	**Rear Auto Button** Automatically controls the rear interior cabin temperature by adjusting airflow distribution and amount. Performing this function will cause the system to switch between manual mode and automatic modes. Refer to "Automatic Operation" for more information.
LOCK REAR	**Rear Lock Button** Press and release to lock out the rear manual temperature controls from adjusting the rear temperature and blower settings.

Icon	Description
FRONT CLIMATE	**Front Climate Button/Done** Press and release this button to change the display on the Uconnect radio back to the Front Climate Controls.
△ ▽	**Rear Passenger Temperature Up and Down Buttons** Provides the rear passengers with independent temperature control. Push the up arrow button on the touchscreen to increase the temperature. Push the down arrow button on the touchscreen to decrease the temperature. When the SYNC feature is active, the passenger's temperature will move up and down with the driver's temperature.
SYNC	**SYNC Button — If Equipped** Press the SYNC button on the touchscreen to toggle the SYNC feature on/off. The SYNC indicator is illuminated when this feature is enabled. SYNC is used to synchronize the rear passenger temperature setting with the driver temperature setting. The SYNC feature also synchronizes the front passenger's temperature to the driver temperature setting. Changing the rear passenger temperature setting while in SYNC will automatically exit this feature.
▲S▼	**Blower Control** Blower Control is used to regulate the amount of air forced through the climate system. There are seven blower speeds available. Adjusting the blower will cause automatic mode to switch to manual operation. The speeds can be selected using the buttons on the touchscreen.

Icon	Description
REAR OFF	**Rear Passenger Climate Control OFF Button** Press and release this button to turn the Rear Climate Controls off.
Panel Mode	**Panel Mode** Press this button on the touchscreen to change the air distribution mode to Panel Mode. In Panel Mode, air comes from the outlets in the instrument panel. Each of these outlets can be individually adjusted to direct the flow of air. The air vanes of the center outlets and outboard outlets can be moved up and down or side to side to regulate airflow direction. There is a shut off wheel located below the air vanes to shut off or adjust the amount of airflow from these outlets.
Bi-Level Mode	**Bi-Level Mode** Press this button on the touchscreen to change the air distribution mode to Bi-Level Mode. In Bi-Level Mode, air comes from the instrument panel outlets and floor outlets. A slight amount of air is directed through the defrost and side window demister outlets. **NOTE:** Bi-Level mode is designed under comfort conditions to provide cooler air out of the panel outlets and warmer air from the floor outlets.
Floor Mode	**Floor Mode** Press this button on the touchscreen to change the air distribution mode to Floor Mode. In Floor Mode, air comes from the floor outlets. A slight amount of air is directed through the defrost and side window demister outlets.

Rear Automatic Temperature Control (ATC) — If Equipped

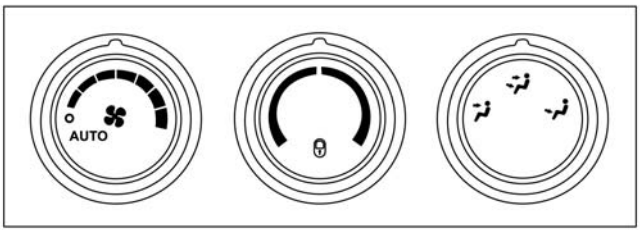

0313118850US

Rear ATC Control Features

1. Adjust the Rear Blower, Rear Temperature and the Rear Modes to suit your comfort needs.
2. ATC is selected by adjusting the knob to the AUTO position.

Once the desired temperature is displayed, the ATC System will automatically achieve and maintain that comfort level. When the system is set up for your comfort level, it is not necessary to change the settings. You will experience the greatest efficiency by simply allowing the system to function automatically.

NOTE:

- It is not necessary to move the temperature settings. The system automatically adjusts the temperature, mode and fan speed to provide comfort as quickly as possible.

Icon	Description
Panel Mode	**Panel Mode** Air comes from the outlets in the headliner. Each of these outlets can be individually adjusted to direct the flow of air. Moving the air vanes of the outlets to one side will shut off the airflow.

Icon	Description
Bi-Level Mode	**Bi-Level Mode** Air comes from both the headliner outlets and the floor outlets. **NOTE:** In many temperature positions, the Bi-Level mode is designed to provide cooler air out of the headliner outlets and warmer air from the floor outlets.
Floor Mode	**Floor Mode** Air comes from the floor outlets.
	Rear Temperature Control Knob To change the temperature in the rear of the vehicle, turn the Temperature Control Knob. Turn it to the right to raise the temperature, or turn it to the left to lower the temperature. The rear temperature settings are displayed in control head. When rear controls are locked by the front system, the Rear Temperature Lock symbol on the control head is illuminated and any rear overhead adjustments are ignored.
	Rear Blower Control Knob The rear blower control can be manually set to off, or any fixed blower speed by rotating the Blower Control Knob in the rear of the vehicle. This allows the rear seat occupants to control the volume of air circulated in the rear of the vehicle.
AUTO	**AUTO Button — If Equipped** Automatically controls the interior cabin temperature by adjusting airflow distribution and amount. Performing this function will cause the system to switch between manual mode and automatic modes. Refer to “Automatic Operation” for more information.

Icon	Description
OFF	**Rear Climate Control/Blower Off** To manually set the rear blower controls to off, press the Rear Climate Control/Blower Off button.

Climate Control Functions

Air Conditioning (A/C)

The Air Conditioning (A/C) button allows the operator to manually activate or deactivate the air conditioning system. When in A/C mode with the ATC set to a cool temperature, dehumidified air flows through the air outlets. If Economy mode is desired, push the A/C button to turn off the A/C mode in the ATC display and deactivate the A/C system.

NOTE:

- If the system is in Mix or Defrost Mode, the A/C can be turned off, but the A/C system shall remain active to prevent fogging of the windows.
- If not operating in AUTO mode, the system will not automatically sense the presence of fog, mist or ice on the windshield. Defrost Mode must be manually selected to clear the windshield and side glass.
- If fog or mist appears on the windshield or side glass, select Defrost Mode and adjust blower speed if needed.

MAX A/C

MAX A/C sets the control for maximum cooling performance. Press and release to toggle between MAX A/C and the prior settings. The button illuminates when MAX A/C is on. In MAX A/C, the blower level and mode position can be adjusted to desired user settings. Pressing other settings will cause the MAX A/C operation to switch to the selected setting and MAX A/C to exit.

Recirculation For Automatic Temperature Control

When outside air contains smoke, odors, or high humidity, or if rapid cooling is desired, you may wish to recirculate interior air by pressing the Recirculation control button. The recirculation indicator will illuminate when this button is selected. Press the button a second time to turn off the Recirculation mode and allow outside air into the vehicle.

NOTE: In cold weather, use of recirculation mode may lead to excessive window fogging. The recirculation feature may be unavailable (button on the touchscreen greyed out) if conditions exist that could create fogging on the inside of the windshield. On systems with Manual Climate Controls, the Recirculation mode is not allowed in Defrost mode to improve window clearing operation. Recirculation will be disabled automatically if this mode is selected. Attempting to use Recirculation while in this mode will cause the LED in the control button to blink and then turn off.

Automatic Temperature Control (ATC) — If Equipped

Automatic Operation

1. Push the AUTO button on the faceplate, or the AUTO button on the touchscreen on the Automatic Temperature Control (ATC) Panel.
2. Next, adjust the temperature you would like the system to maintain by adjusting the driver and passenger temperature control buttons. Once the desired temperature is displayed, the system will achieve and automatically maintain that comfort level.
3. When the system is set up for your comfort level, it is not necessary to change the settings. You will experience the greatest efficiency by simply allowing the system to function automatically.

NOTE:

- It is not necessary to move the temperature settings for cold or hot vehicles. The system automatically adjusts the temperature, mode, and blower speed to provide comfort as quickly as possible.
- The temperature can be displayed in U.S. or Metric units by selecting the US/Metric customer programmable feature. Refer to the “Uconnect Settings” in “Multimedia” for further information. To provide you with maximum comfort in the Automatic mode during cold startups, the blower fan will remain on low until the engine warms up. The blower will increase in speed and transition into Auto mode.

Manual Operation Override

This system offers a full complement of manual override features. The AUTO symbol in the front ATC display will be turned off when the system is being used in the manual mode.

Operating Tips

NOTE: Refer to the chart at the end of this section for suggested control settings for various weather conditions.

Summer Operation

The engine cooling system must be protected with a high-quality antifreeze coolant to provide proper corrosion protection and to protect against engine overheating. OAT coolant (conforming to MS.90032) is recommended. Refer to "Fluids And Lubricants" in "Technical Specifications" for proper coolant selection.

Winter Operation

To ensure the best possible heater and defroster performance, make sure the engine cooling system is functioning properly and the proper amount, type, and concentration of coolant is used. Refer to "Dealer Service" in "Servicing And Maintenance" for proper coolant selection. Use of the air Recirculation mode during Winter months is not recommended, because it may cause window fogging.

Vacation/Storage

Before you store your vehicle, or keep it out of service (i.e., vacation) for two weeks or more, run the air conditioning system at idle for about five minutes, in fresh air with the blower setting on high. This will ensure adequate system lubrication to minimize the possibility of compressor damage when the system is started again.

Window Fogging

Vehicle windows tend to fog on the inside in mild, rainy, and/or humid weather. To clear the windows, select Defrost or Mix mode and increase the front blower speed. Do not use the Recirculation mode without A/C for long periods, as fogging may occur.

Outside Air Intake

Make sure the air intake, located directly in front of the windshield, is free of obstructions such as leaves. Leaves collected in the air intake may reduce airflow, and if they enter the plenum, they could plug the water drains. In winter months, make sure the air intake is clear of ice, slush, and snow.

A/C Air Filter

The climate control system filters out dust and pollen from the air. Refer to an authorized dealer for filter replacement instructions.

Operating Tips Chart

WEATHER	CONTROL SETTINGS
Hot weather and vehicle interior is very hot	Set the mode control to , on, and blower on high. Roll down the windows for a minute to flush out the hot air. Once comfort is achieved adjust controls for comfort.
Warm weather	Turn on and set the mode control to the position.
Cool Sunny	Operate in position.
Cool & Humid conditions	Set the mode control to and turn on to keep windows clear.
Cold Weather	Set the mode control to the position. If windshield fogging starts to occur, move the control towards the position.

8000cb71

WINDOWS

Power Windows

The window controls on the driver's door trim panel control all of the door windows.

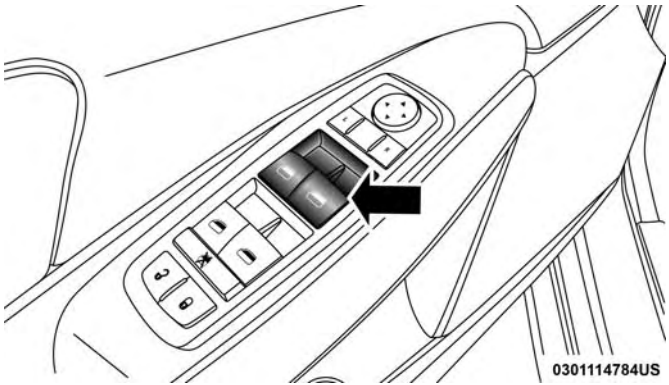

Power Window Switches

There are single window controls on each passenger door trim panel, which operate the passenger door windows. The window controls will operate when the ignition is in the ON/RUN or ACC position.

NOTE: For vehicles equipped with Uconnect, the power window switches will remain active for up to 10 minutes after the ignition is cycled to the OFF position. Opening either front door will cancel this feature. The time is programmable. Refer to "Uconnect Settings" in "Multimedia" for further information.

WARNING!

Never leave children unattended in a vehicle. Do not leave the key fob in or near the vehicle or in a location accessible to children, and do not leave the ignition of a vehicle equipped with Keyless Enter-N-Go in the ACC or ON/RUN mode. Occupants, particularly unattended children, can become entrapped by the windows while operating the power window switches. Such entrapment may result in serious injury or death.

Auto-Down Feature

The driver's power window switch has an Auto-Down feature. Push the window switch past the first detent, release, and the window will go down automatically.

To open the window part way, push the window switch to the first detent and release it when you want the window to stop.

To stop the window from going all the way down during the Auto-Down operation, pull up on the switch briefly.

Auto-Up Feature With Anti-Pinch Protection

On some models, the driver and front passenger power window switches have an Auto-Up feature. Pull the window switch up to the second detent, release, and the window will go up automatically.

To stop the window from going all the way up during the Auto-Up operation, push down on the switch briefly.

To close the window part way, pull the window switch up to the first detent and release it when you want the window to stop.

NOTE:

- If the window runs into any obstacle during Auto-Closure, it will reverse direction and then go back down. Remove the obstacle and use the window switch again to close the window.
- Any impact due to rough road conditions may trigger the Auto-Reverse function unexpectedly during Auto-Closure. If this happens, pull the switch lightly to the first detent and hold to close window manually.

WARNING!

There is no anti-pinch protection when the window is almost closed. To avoid personal injury, be sure to clear your arms, hands, fingers, and objects from the window path before closing the window. Such entrapment may result in serious injury.

Reset Auto-Up

Should the Auto-Up feature stop working, the window may need to be reset. To reset Auto-Up:

1. Make sure the door is fully closed.
2. Pull the window switch up to close the window completely and continue to hold the switch up for an additional two seconds after the window is closed.
3. Push the window switch down firmly to the second detent to open the window completely and continue to hold the switch down for an additional two seconds after the window is fully open.

Window Lockout Switch

The window lockout switch on the driver's door trim panel allows you to disable the window control on the rear passenger doors. To disable the window controls, push and release the window lockout button (setting it in the down position). To enable the window controls, push and release the window lockout button again (setting it in the up position).

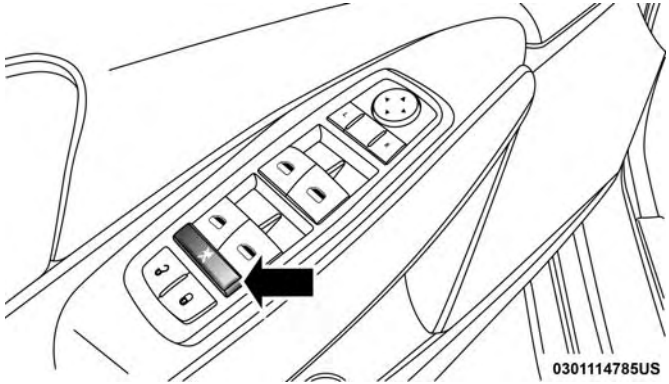

Window Lockout Switch

Wind Buffeting

Wind buffeting can be described as the perception of pressure on the ears or a helicopter-type sound in the ears. Your vehicle may exhibit wind buffeting with the windows down, or the sunroof (if equipped) in certain open or partially open positions. This is a normal occurrence and can be minimized. If the buffeting occurs with the rear windows open, open the front and rear windows together to minimize the buffeting. If the buffeting occurs with the sunroof open, adjust the sunroof opening to minimize the buffeting or open any window.

POWER SUNROOF — IF EQUIPPED

The power sunroof switch is located between the sun visors on the overhead console.

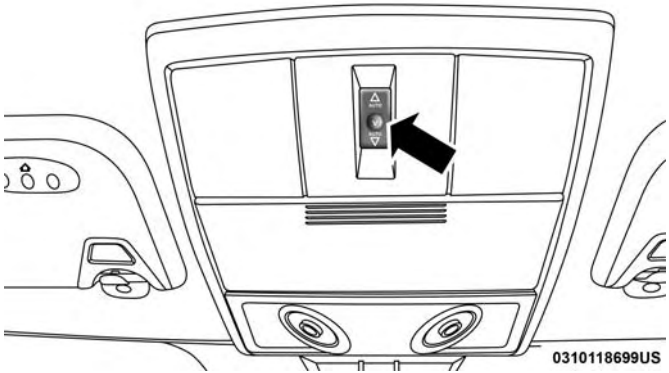

Power Sunroof Switch

WARNING!

- **Never leave children unattended in a vehicle, or with access to an unlocked vehicle. Never leave the key fob in or near the vehicle, or in a location accessible to children. Do not leave the ignition of a vehicle**

(Continued)

WARNING! *(Continued)*

equipped with Keyless Enter-N-Go in the ACC or ON/RUN mode. Occupants, particularly unattended children, can become entrapped by the power sunroof while operating the power sunroof switch. Such entrapment may result in serious injury or death.

- **In a collision, there is a greater risk of being thrown from a vehicle with an open sunroof. You could also be seriously injured or killed. Always fasten your seat belt properly and make sure all passengers are also properly secured.**
- **Do not allow small children to operate the sunroof. Never allow your fingers, other body parts, or any object, to project through the sunroof opening. Injury may result.**

Opening Sunroof

Express

Push the switch rearward and release it within one-half second. The sunroof and sunshade will open automatically and stop when the full open position is reached. This is called "Express Open." During Express Open operation, any other actuation of the sunroof switch will stop the sunroof.

Manual Mode

To open the sunroof, push and hold the switch rearward. The sunroof will move rearward and automatically stop at full open position. Any release of the switch will stop the movement. The sunroof and sunshade will remain in a partially opened condition until the sunroof switch is pushed again.

Closing Sunroof

Express

Push the switch forward and release it within one-half second and the sunroof will close automatically from any position. The sunroof will close fully and stop automatically. This is called "Express Close." During Express Close operation, any other actuation of the switch will stop the sunroof.

Manual Mode

To close the sunroof, push and hold the switch forward. The sunroof will move forward and automatically stop at full closed position. Any release of the switch will stop the movement and the sunroof will remain in a partially closed condition until the sunroof switch is pushed again.

Wind Buffeting

Wind buffeting can be described as the perception of pressure on the ears or a helicopter-type sound in the ears. Your vehicle may exhibit wind buffeting with the windows down, or the sunroof (if equipped) in certain open or partially open positions. This is a normal occurrence and can be minimized. If the buffeting occurs with the rear windows open, open the front and rear windows together to minimize the buffeting. If the buffeting occurs with the sunroof open, adjust the sunroof opening to minimize the buffeting or open any window.

Sunshade Operation

The sunshade can be opened manually. However, the sunshade will open automatically as the sunroof opens.

NOTE: The sunshade cannot be closed if the sunroof is open.

Anti Pinch Protect Feature

This feature will detect an obstruction in the opening of the sunroof during Express Close operation. If an obstruction in the path of the sunroof is detected, the sunroof will automatically retract. Remove the obstruction if this occurs. Next, push the switch forward and release to Express Close.

Venting Sunroof — Express

Push and release the Vent button within one half second and the sunroof will open to the vent position. This is called "Express Vent", and it will occur regardless of sunroof position. During Express Vent operation, any other actuation of the switch will stop the sunroof.

Sunroof Maintenance

Use only a non-abrasive cleaner and a soft cloth to clean the glass panel.

Ignition Off Operation

The power sunroof switch will remain active for up to approximately ten minutes after the ignition switch is turned to the LOCK position. Opening either front door will cancel this feature.

NOTE: Ignition Off time is programmable through the Uconnect System. Refer to "Uconnect Settings/Customer Programmable Features" in "Multimedia" for further information.

HOOD

Opening

Two latches must be released to open the hood.

1. Pull the hood release lever located under the left side of the instrument panel.

Hood Release

2. Outside of the vehicle, locate the safety latch lever near the center of the grille between the grille and hood opening. Push the safety latch lever to the left and raise the hood.

Underhood Safety Latch

3. Use the hood prop rod to secure the hood in the open position. Place the upper end of the prop rod in the hole on the underside of the hood.

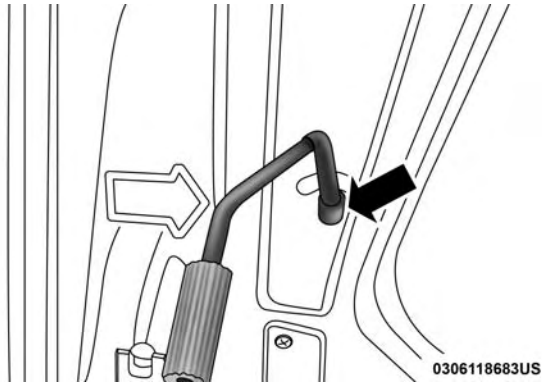

Hood Prop Rod

Closing

WARNING!

Be sure the hood is fully latched before driving your vehicle. If the hood is not fully latched, it could open when the vehicle is in motion and block your vision. Failure to follow this warning could result in serious injury or death.

CAUTION!

To prevent possible damage:

- **Before closing hood, make sure the hood prop rod is fully seated into its storage retaining clips.**
- **Do not slam the hood to close it. Use a firm downward push at the center front edge of the hood to ensure that both latches engage. Never drive your vehicle unless the hood is fully closed, with both latches engaged.**

LIFTGATE

Opening

The liftgate can be unlocked or locked pushing the unlock or lock button on the Remote Keyless Entry key fob, the Keyless Enter-N-Go (Passive Entry) lock/unlock button underneath the left side of the accent bar, which is located on the liftgate below the glass or by activating the power door lock switch located on either front door trim panel.

Refer to “Keyless Enter-N-Go” in “Getting To Know Your Vehicle” for further information on Keyless Enter-N-Go (Passive Entry).

NOTE: The liftgate cannot be unlocked or locked with the manual door lock plungers on the door trim panels or the door lock cylinder on the driver’s door.

To open the unlocked liftgate, squeeze the handle and pull the liftgate toward you. Gas props will raise and support the liftgate in the open position.

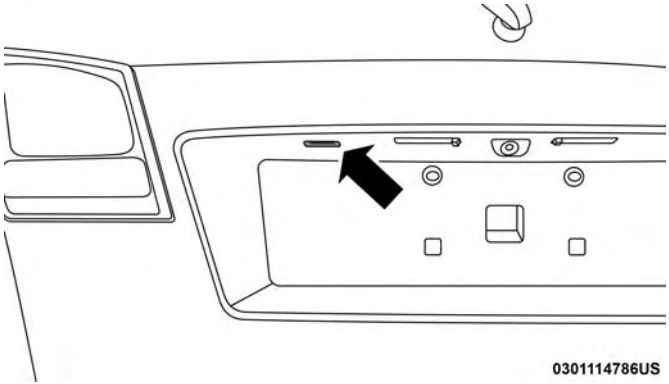

Liftgate Release

NOTE: Because the gas pressure drops with temperature, it may be necessary to assist the props when opening the liftgate in cold weather.

WARNING!

- **Driving with the liftgate open can allow poisonous exhaust gases into your vehicle. You and your passengers could be injured by these fumes. Keep the liftgate closed when you are operating the vehicle.**
- **If you are required to drive with the liftgate open, make sure that all windows are closed, and the climate control blower switch is set at high speed. Do not use the recirculation mode.**

Cargo Area Features

Cargo Management System

Five Passenger System Features

- A raised load floor that sits on top of a large built-in storage bin.
- A tri-fold door built into the load floor that allows easy access to items in the built-in storage bin.

- 60/40 split second-row passenger seats with fold flat feature, which allows for extended cargo space. Refer to "Seats" in "Getting To Know Your Vehicle" for further information.
- An optional front passenger seat with fold flat feature, which extends cargo space even further. Refer to "Seats" in "Getting To Know Your Vehicle" for further information.
- Cargo tie-downs.
- A retractable cargo area cover (if equipped).

Seven Passenger System Features

- A large built-in storage bin with a hinged hardcover located in the floor behind the third-row passenger seats.
- 60/40 split second-row passenger seats with fold flat feature, which allows for extended cargo space. Refer to "Seats" in "Getting To Know Your Vehicle" for further information.
- 50/50 split third-row passenger seats with fold flat feature, which allows for extended cargo space. Refer to "Seats" in "Getting To Know Your Vehicle" for further information.
- An optional front passenger seat with fold flat feature, which extends cargo space even further. Refer to "Seats" in "Getting To Know Your Vehicle" for further information.
- Cargo tie-downs.

Retractable Cargo Area Cover (If Equipped) — Five Passenger Models

NOTE: The purpose of this cover is for privacy, not to secure loads. It will not prevent cargo from shifting or protect passengers from loose cargo.

The removable retractable cargo area cover mounts in the cargo area behind the top of the rear seats.

The cover, when extended, covers the cargo area to keep items out of sight. Notches in the trim panels near the liftgate opening secure the extended cover in place.

The cover rolls away neatly inside its housing when not in use. You can also remove the cover from the vehicle to make more room in the cargo area.

To Install The Cover:

1. Position the cover in the vehicle so that the flat side of the housing faces upward.
2. Insert either the left or the right spring-loaded post (located on the ends of the cover housing) into the left attachment point or the right attachment point (shown).

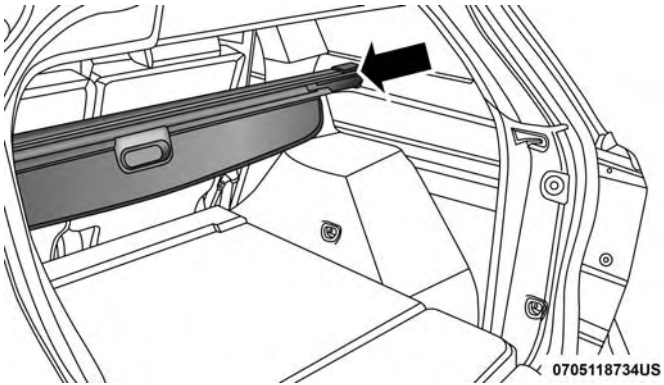

Installing Retractable Cargo Area Cover

3. Insert the spring-loaded post on the opposite end of the cover housing into the attachment point on the opposite side of the vehicle.
4. Grab the cover handle and pull it toward you. As the cover nears the liftgate opening, guide the rear attachment posts (on both ends of the cover) into the notches in the trim panels. Lower the cover to position the posts into the bottom of the notches and release the handle.

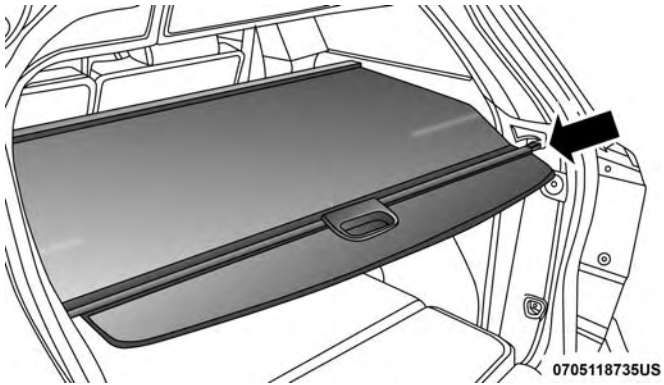

Positioning Retractable Cargo Area Cover

WARNING!

In a collision, a loose cargo cover in the vehicle could cause injury. It could fly around in a sudden stop and strike someone in the vehicle. Do not store the cargo cover on the cargo floor or in the passenger compartment. Remove the cover from the vehicle when taken from its mounting. Do not store it in the vehicle.

Cargo Tie-Downs

WARNING!

Cargo tie-downs are not safe anchors for a child seat tether strap. In a sudden stop or collision, a tie-down could pull loose and allow the child seat to come loose. A child could be badly injured. Use only the anchors provided for child seat tethers.

Cargo tie-downs are located on both rear trim panels. These tie-downs should be used to secure loads safely when the vehicle is moving.

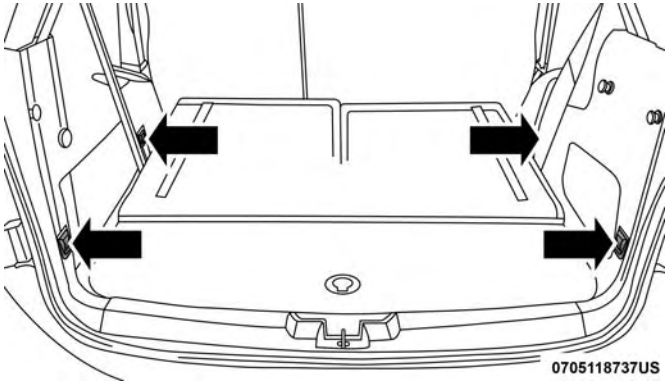

Cargo Tie-Downs

WARNING!

The weight and position of cargo and passengers can change the vehicle center of gravity and vehicle handling. To avoid loss of control resulting in personal injury, follow these guidelines for loading your vehicle:

- **Do not carry loads that exceed the load limits described on the label attached to the left door or left door center pillar.**
- **Always place cargo evenly on the cargo floor. Put heavier objects as low and as far forward as possible.**
- **Place as much cargo as possible in front of the rear axle. Too much weight or improperly placed weight over or behind the rear axle can cause the vehicle to sway.**
- **Do not pile luggage or cargo higher than the top of the seatback. This could impair visibility or become a dangerous projectile in a sudden stop or collision.**
- **To help protect against personal injury, passengers should not be seated in the rear cargo area. The rear cargo space is intended for load carrying purposes only, not for passengers, who should sit in seats and use seat belts.**

GARAGE DOOR OPENER — IF EQUIPPED

HomeLink replaces up to three remote controls (hand-held transmitters) that operate devices such as garage door openers, motorized gates, lighting or home security systems. The HomeLink unit operates off your vehicle's battery.

The HomeLink buttons, located on either the overhead console, headliner or sunvisor, designate the three different HomeLink channels. The HomeLink indicator is located above the center button.

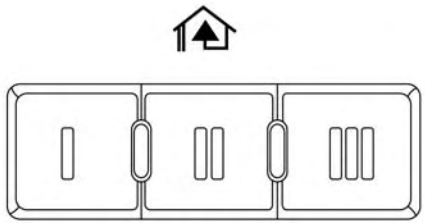

0313115280US

HomeLink Buttons/Overhead Consoles

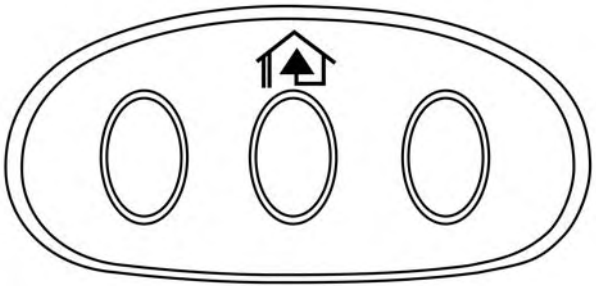

0313115279US

HomeLink Buttons/Sunvisor/Headliner

NOTE: HomeLink is disabled when the Vehicle Security Alarm is active.

Before You Begin Programming HomeLink

Be sure that your vehicle is parked outside of the garage before you begin programming.

For more efficient programming and accurate transmission of the radio-frequency signal it is recommended that a new battery be placed in the hand-held transmitter of the device that is being programmed to the HomeLink system.

To erase the channels, place the ignition in the ON/RUN position, and push and hold the two outside HomeLink buttons (I and III) for up to 20 seconds or until the orange indicator flashes.

NOTE:

- Erasing all channels should only be performed when programming HomeLink for the first time. Do not erase channels when programming additional buttons.
- If you have any problems, or require assistance, please call toll-free 1-800-355-3515 or, on the Internet at HomeLink.com for information or assistance.

Programming A Rolling Code

For programming garage door openers that were manufactured after 1995:

These garage door openers can be identified by the “LEARN” or “TRAIN” button located where the hanging antenna is attached to the garage door opener. It is NOT the button that is normally used to open and close the door. The name and color of the button may vary by manufacturer.

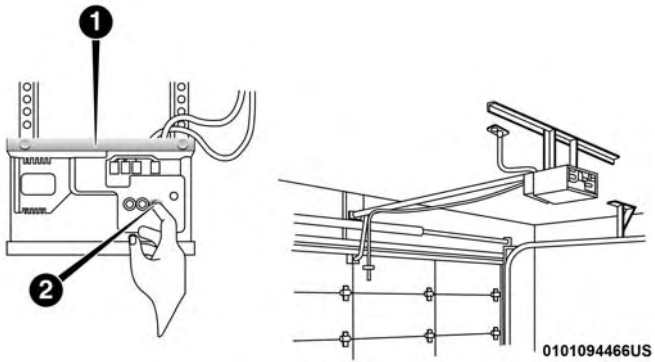

Training The Garage Door Opener

1 — Door Opener
2 — Training Button

1. Place the ignition in the ON/RUN position.

NOTE: For vehicles equipped with Keyless Enter-N-Go, place the ignition in the RUN position with the engine ON. Make sure while programming HomeLink with the engine ON that your vehicle is outside of your garage, or that the garage door remains open at all times.

2. Place the hand-held transmitter 1 to 3 inches (3 to 8 cm) away from the HomeLink button you wish to program while keeping the HomeLink indicator light in view.
3. Push and hold the HomeLink button you want to program while you push and hold the hand-held transmitter button.
4. Continue to hold both buttons and observe the indicator light. The HomeLink indicator will flash slowly and then rapidly after HomeLink has received the frequency signal from the hand-held transmitter. Release both buttons after the indicator light changes from slow to rapid.
5. At the garage door opener motor (in the garage), locate the “LEARN” or “TRAINING” button. This can usually be found where the hanging antenna wire is attached to the garage door opener/device motor. Firmly push and release the “LEARN” or “TRAINING” button. On some garage door openers/devices there may be a light that blinks when the garage door opener/device is in the LEARN/TRAIN mode.

NOTE: You have 30 seconds in which to initiate the next step after the LEARN button has been pushed.

6. Return to the vehicle and push the programmed HomeLink button twice (holding the button for two seconds each time). If the garage door opener/device activates, programming is complete.

NOTE: If the garage door opener/device does not activate, push the button a third time (for two seconds) to complete the training.

To program the remaining two HomeLink buttons, repeat each step for each remaining button. DO NOT erase the channels.

Programming A Non-Rolling Code

For programming Garage Door Openers manufactured before 1995:

1. Place the ignition in the ON/RUN position.

NOTE: For vehicles equipped with Keyless Enter-N-Go, place the ignition in the RUN position with the engine ON. Make sure while programming HomeLink with the engine ON that your vehicle is outside of your garage, or that the garage door remains open at all times.

2. Place the hand-held transmitter 1 to 3 inches (3 to 8 cm) away from the HomeLink button you wish to program while keeping the HomeLink indicator light in view.
3. Push and hold the HomeLink button you want to program while you push and hold the hand-held transmitter button.
4. Continue to hold both buttons and observe the indicator light. The HomeLink indicator will flash slowly and then rapidly after HomeLink has received the frequency signal from the hand-held transmitter. Release both buttons after the indicator light changes from slow to rapid.
5. Push and hold the programmed HomeLink button and observe the indicator light.
   - If the indicator light stays on constantly, programming is complete and the garage door/device should activate when the HomeLink button is pushed.
   - To program the two remaining HomeLink buttons, repeat each step for each remaining button. DO NOT erase the channels.

Canadian/Gate Operator Programming

For programming transmitters in Canada/United States that require the transmitter signals to "time-out" after several seconds of transmission:

Canadian radio frequency laws require transmitter signals to time-out (or quit) after several seconds of transmission, which may not be long enough for HomeLink to pick up the signal during programming. Similar to this Canadian law, some U.S. gate operators are designed to time-out in the same manner.

It may be helpful to unplug the device during the cycling process to prevent possible overheating of the garage door or gate motor.

1. Cycle the ignition to the ON/RUN position.

NOTE: For vehicles equipped with Keyless Enter-N-Go, place the ignition in the RUN position with the engine ON. Make sure while programming HomeLink with the engine ON that your vehicle is outside of your garage, or that the garage door remains open at all times.

2. Place the hand-held transmitter 1 to 3 inches (3 to 8 cm) away from the HomeLink button you wish to program while keeping the HomeLink indicator light in view.
3. Continue to push and hold the HomeLink button while you push and release ("cycle") your hand-held transmitter every two seconds until HomeLink has successfully accepted the frequency signal. The indicator light will flash slowly and then rapidly when fully trained.
4. Watch for the HomeLink indicator to change flash rates. When it changes, it is programmed. It may take up to 30 seconds or longer in rare cases. The garage door may open and close while you are programming.
5. Push and hold the programmed HomeLink button and observe the indicator light.

NOTE:

- If the indicator light stays on constantly, programming is complete and the garage door/device should activate when the HomeLink button is pushed.
- To program the two remaining HomeLink buttons, repeat each step for each remaining button. DO NOT erase the channels.

If you unplugged the garage door opener/device for programming, plug it back in at this time.

Using HomeLink

To operate, push and release the programmed HomeLink button. Activation will now occur for the programmed device (i.e. garage door opener, gate operator, security system, entry door lock, home/office lighting, etc.) The hand-held transmitter of the device may also be used at any time.

Security

It is advised to erase all channels before you sell or turn in your vehicle.

To do this, push and hold the two outside buttons for 20 seconds until the red indicator flashes.

NOTE: All channels will be erased. Individual channels cannot be erased.

The HomeLink Universal Transceiver is disabled when the Vehicle Security Alarm is active.

Troubleshooting Tips

If you are having trouble programming HomeLink, here are some of the most common solutions:

- Replace the battery in the Garage Door Opener hand-held transmitter.
- Push the LEARN button on the Garage Door Opener to complete the training for a Rolling Code.
- Did you unplug the device for programming and remember to plug it back in?

If you have any problems, or require assistance, please call toll-free 1-800-355-3515 or, on the Internet at HomeLink.com for information or assistance.

WARNING!

- **Vehicle exhaust contains carbon monoxide, a dangerous gas. Do not run your vehicle in the garage while programming the transceiver. Exhaust gas can cause serious injury or death.**
- **Your motorized door or gate will open and close while you are programming the universal transceiver. Do not program the transceiver if people, pets or other objects are in the path of the door or gate. Only use this transceiver with a garage door opener that has a "stop and reverse" feature as required by Federal safety standards. This includes most garage door opener models manufactured after 1982. Do not**

(Continued)

WARNING! *(Continued)*

use a garage door opener without these safety features. Call toll-free 1-800-355-3515 or, on the Internet at HomeLink.com for safety information or assistance.

General Information

The following regulatory statement applies to all Radio Frequency (RF) devices equipped in this vehicle:

This device complies with Part 15 of the FCC Rules and with Industry Canada license-exempt RSS standard(s). Operation is subject to the following two conditions:

1. This device may not cause harmful interference, and
2. This device must accept any interference received, including interference that may cause undesired operation.

NOTE: Changes or modifications not expressly approved by the party responsible for compliance could void the user's authority to operate the equipment.

INTERNAL EQUIPMENT

Storage

Glove Compartment

The glove compartment is located on the passenger side of the instrument panel.

To open the glove compartment, pull the release handle.

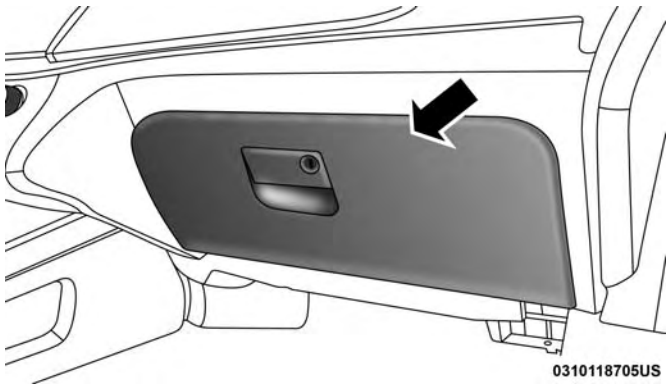

Glove Compartment

Floor Console Storage

An open storage area, or cubby bin, is located in the floor console.

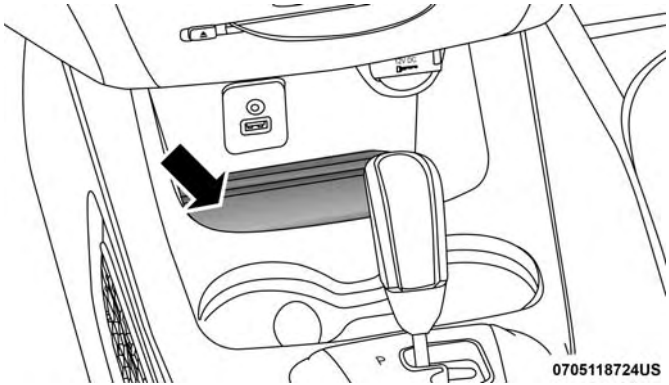

Floor Console Cubby Bin

Center Console Storage

There is a storage tray and storage compartment located under the center console armrest.

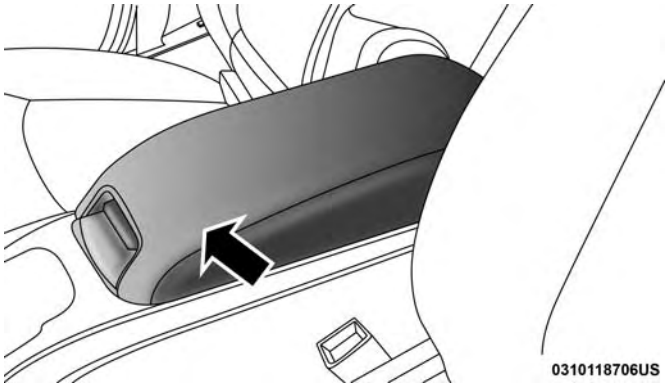

Center Console

Pull upward on the release handle, located on the front of the lid, to gain access to the storage tray and storage compartment.

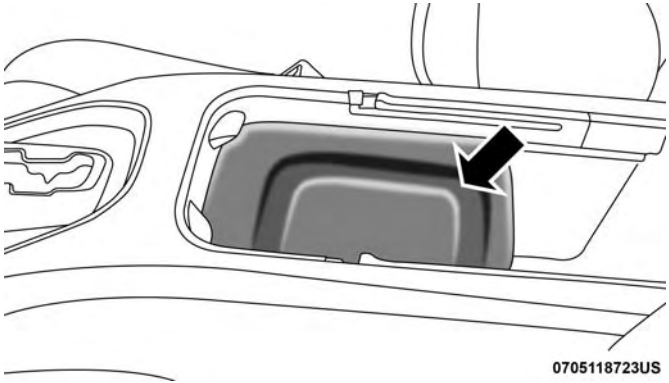

Center Console Storage Tray

The storage tray can be slid forward and rearward or removed to access the center console storage compartment.

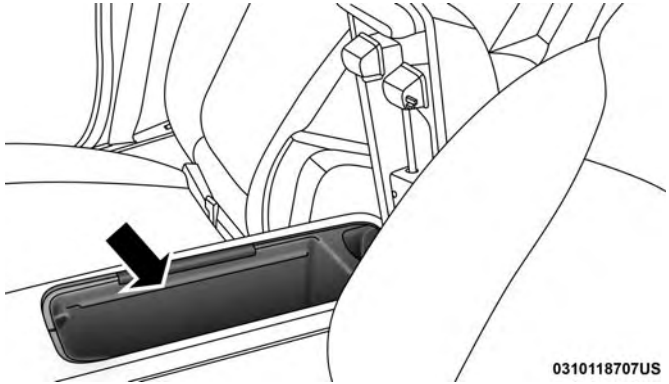

Center Console Storage Compartment

WARNING!

Do not operate this vehicle with a console compartment lid in the open position. Driving with the console compartment lid open may result in injury in a collision.

Sliding Armrest

The center console armrest can also slide rearward for easy access to the storage area.

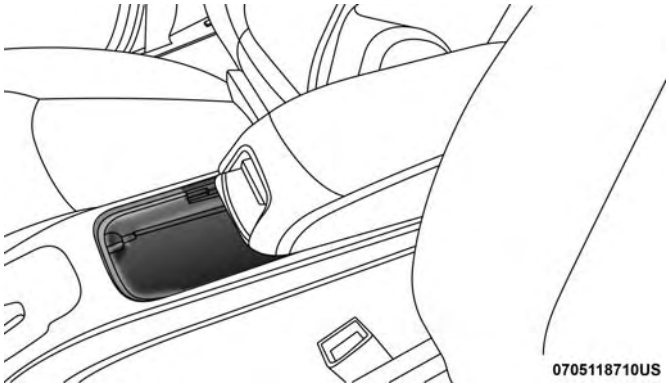

Sliding Armrest

WARNING!

Do not operate this vehicle with a console compartment lid in the open position. Driving with the console compartment lid open may result in injury in a collision.

Second-Row Map Pocket And Grocery Retainers — If Equipped

A map storage pocket and grocery retainers are located on the back of the driver's and passenger's seatbacks.

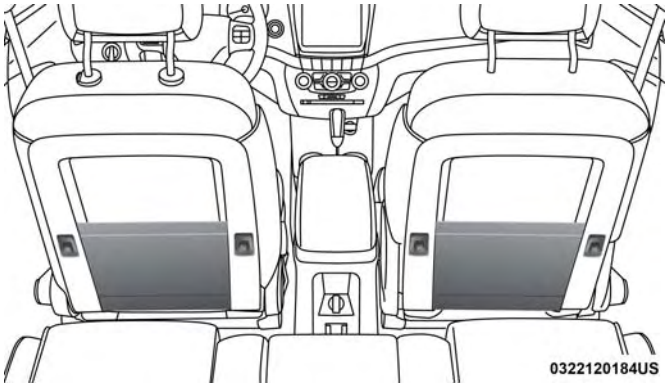

Seat Storage And Grocery Retainers

In-Floor Storage Bin With Removable Liner

NOTE: Position the front seat to at least a mid-track position to provide easier access to the storage bin.

An in-floor storage bin is located behind each front seat. Each 1.6 gal (5.9L) bin can hold up to 12, 12 oz (0.35L) cans, plus ice, or other items. The removable bin liner allows for easy filling, emptying, and cleaning.

To access the bin, position the floor mat aside (if equipped). Pull the door latch release-loop upward to release the latch and then forward to open the bin door.

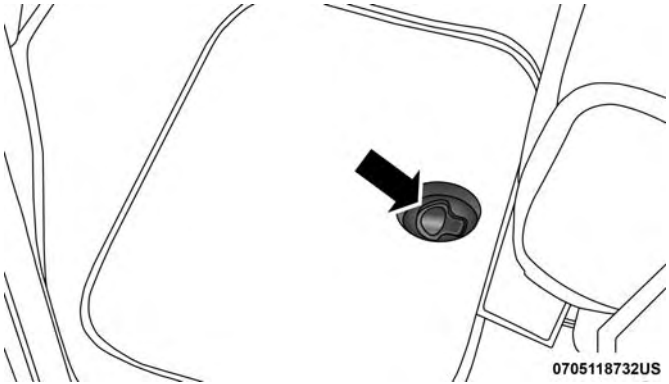

In-Floor Storage

The liner can be removed for easy cleaning.

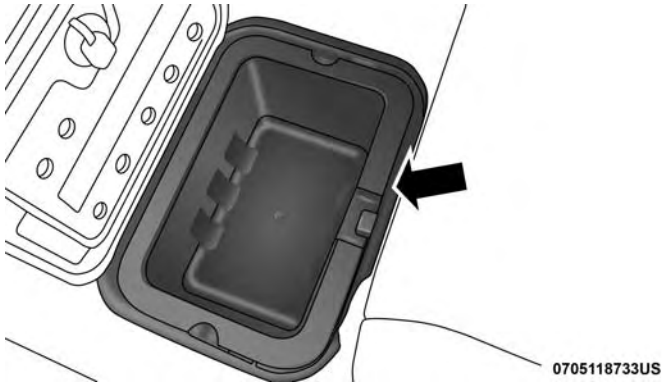

Removable Liner

Cupholders

There are two cupholders, located in the center floor console, for the front passengers.

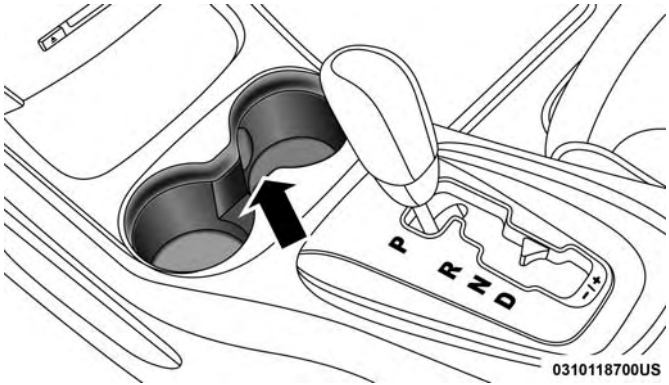

Floor Console Cupholders

For passengers in the second row there are two cupholders, located in the center armrest between the two seats.

When the armrest is folded flat the cupholders are in the back of the Head Restraint. The Head Restraint can be adjusted to better position the cupholders.

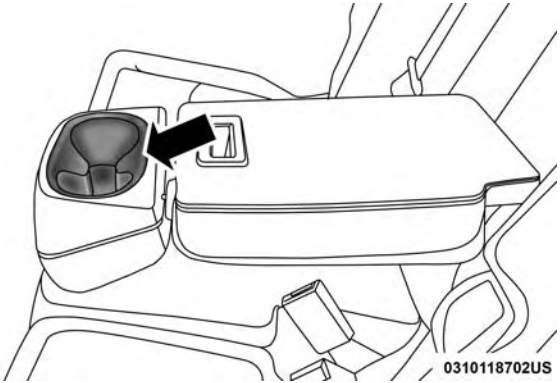

Armrest Cupholders

For vehicles equipped with third row seating, there are additional cupholders located in the trim panels.

In addition to cupholders, vehicles may also be equipped with bottle holders. The bottle holders are located on the door trim panels.

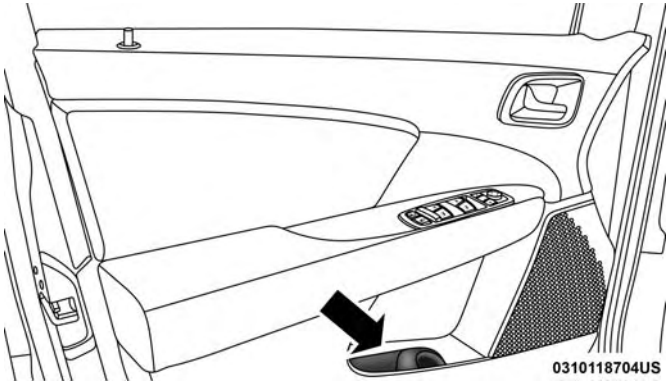

Door Bottle Holder

WARNING!

If containers of hot liquid are placed in the bottle holder, they can spill when the door is closed, burning the occupants. Be careful when closing the doors to avoid injury.

Power Outlets

A 12 Volt (13 Amp) power outlet is located in the center console below the radio. The power outlet has power available when the ignition is in the ON/RUN or ACC position.

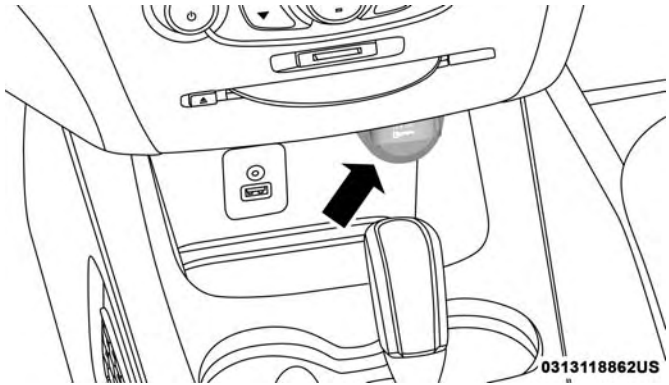

Front 12 Volt Power Outlet

This power outlet will also operate a conventional cigar lighter unit. **To preserve the heating element, do not hold the lighter in the heating position.**

A second 12 Volt (13 Amp) power outlet is located inside the center console storage area. Power is available with the ignition is in the ON/RUN, ACC or LOCK position.

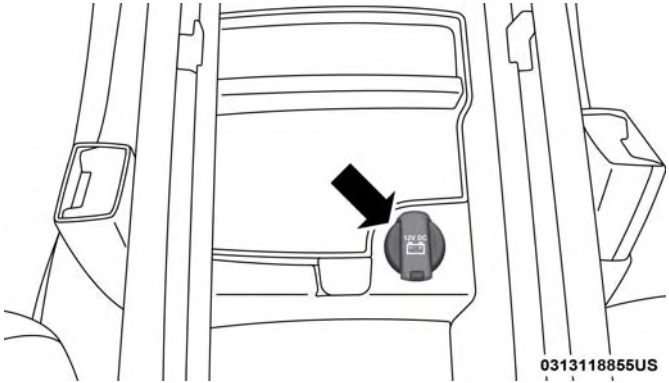

Center Console 12 Volt Power Outlet

A third fused 12 Volt power outlet is located on the back of the center console. This power outlet has power available when the ignition is in the LOCK, ON or ACC position.

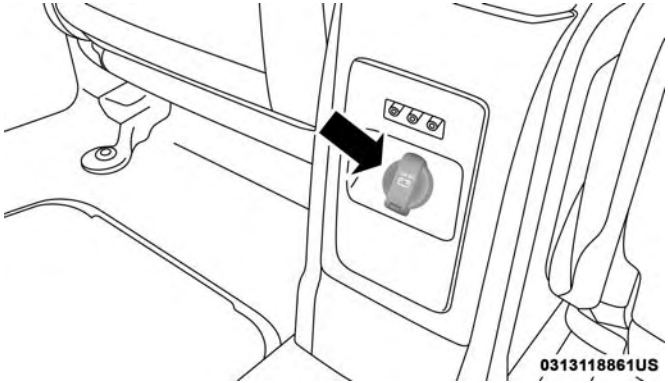

Rear Seat 12 Volt Power Outlet

A fourth fused 12 Volt power outlet is located on the left quarter trim panel in the cargo area. This power outlet has power available when the ignition is in the ON or ACC position.

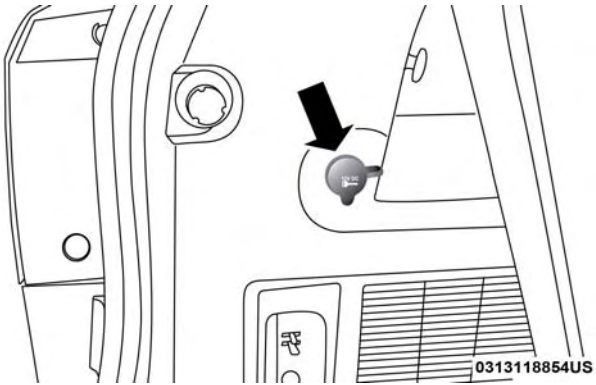

Rear Cargo Area Power Outlet

NOTE: To ensure proper operation a Mopar knob and element must be used.

CAUTION!

- **Do not exceed the maximum power of 160 Watts (13 Amps) at 12 Volts. If the 160 Watt (13 Amp) power rating is exceeded the fuse protecting the system will need to be replaced.**
- **The power outlet on the bottom of the center console shares the fuse with the power outlet on the back of the console. The combined usage must not exceed 160 Watts (13 Amps) at 12 Volts.**
- **Power outlets are designed for accessory plugs only. Do not insert any other object in the power outlets as this will damage the outlet and blow the fuse. Improper use of the power outlet can cause damage not covered by your New Vehicle Limited Warranty.**

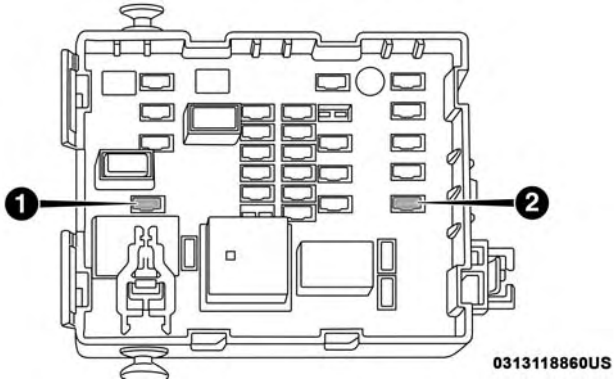

Power Outlet Fuses

1 — F103 20 A Yellow Power Outlet Console Bin And Power Outlet Console Rear
2 — F102 20 A Yellow Cigar Lighter Instrument Panel And Power Outlet Left Rear Cargo Area

WARNING!

To avoid serious injury or death:
- **Only devices designed for use in this type of outlet should be inserted into any 12 Volt outlet.**
- **Do not touch with wet hands.**

(Continued)

WARNING! *(Continued)*

- **Close the lid when not in use and while driving the vehicle.**
- **If this outlet is mishandled, it may cause an electric shock and failure.**

CAUTION!

- **Many accessories that can be plugged in draw power from the vehicle's battery, even when not in use (i.e., cellular phones, etc.). Eventually, if plugged in long enough, the vehicle's battery will discharge sufficiently to degrade battery life and/or prevent the engine from starting.**
- **Accessories that draw higher power (i.e., coolers, vacuum cleaners, lights, etc.) will degrade the battery even more quickly. Only use these intermittently and with greater caution.**
- **After the use of high power draw accessories, or long periods of the vehicle not being started (with accessories still plugged in), the vehicle must be driven a sufficient length of time to allow the alternator to recharge the vehicle's battery.**

(Continued)

CAUTION! *(Continued)*

- **Power outlets are designed for accessory plugs only. Do not hang any type of accessory or accessory bracket from the plug.**

Power Inverter — If Equipped

Your vehicle may be equipped with a 115 or 230 Volt AC (150 Watt maximum) power outlet located on the back of the center console. This outlet can power mobile phones, electronics and other low power devices requiring power up to 150 Watts. Certain high-end video game consoles will exceed this power limit, as will most power tools.

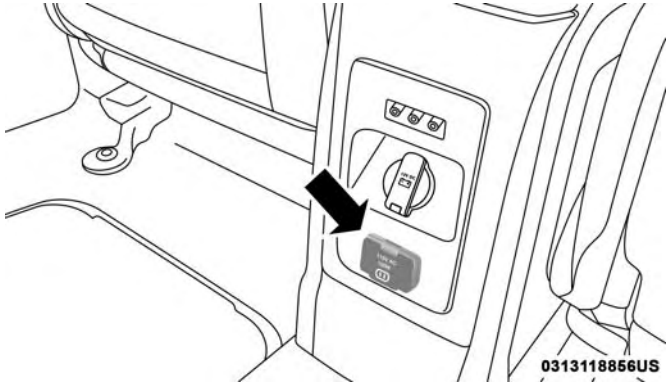

Power Inverter

The power inverter is designed with built-in overload protection. If the power rating of 150 Watts is exceeded, the power inverter will automatically shut down. Once the electrical device has been removed from the outlet the inverter should automatically reset. If the power rating exceeds approximately 170 Watts, the power inverter may have to be reset manually. To reset the inverter manually press the power inverter button OFF and ON. To avoid overloading the circuit, check the power ratings on electrical devices prior to using the inverter.

NOTE: Due to built-in overload protection, the power outlet will shut down if the 115 Volt AC (150 Watt maximum) power rating is exceeded.

WARNING!

To avoid serious injury or death:
- **Do not use a three-prong adaptor.**
- **Do not insert any objects into the receptacles.**
- **Do not touch with wet hands.**
- **Close the lid when not in use.**
- **If this outlet is mishandled, it may cause an electric shock and failure.**

Power Inverter Operation

The power inverter is turned On and Off using the Uconnect System.

Vehicles Equipped With Radio 4.3

To turn the power inverter on or off perform the following:

1. Press the "More" button on the faceplate (located next to the Uconnect display).
2. Press the "Outlet" button on the touchscreen (located on the Uconnect display) to turn the power inverter On or Off.

Vehicles Equipped With Uconnect 3/3 NAV

To turn the power inverter on or off perform the following:

1. Press the "Controls" button on the touchscreen.
2. Press the "Outlet" button on the touchscreen to turn the power inverter On or Off.

Sunglasses Storage

To access the storage compartment, push on the raised bars on the compartment door in the center of the console and release and the door will swing downward.

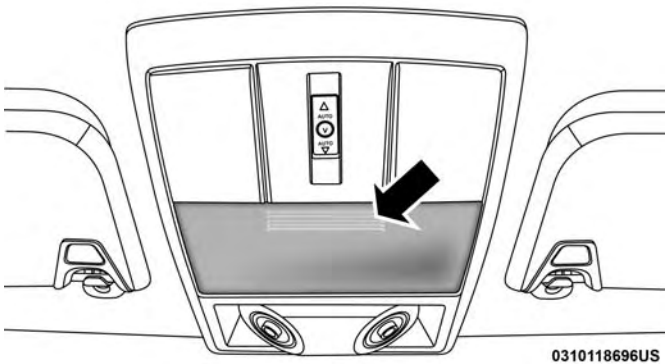

Sunglasses Storage Compartment

ROOF LUGGAGE RACK — IF EQUIPPED

The roof rack cross rails and side rails are designed to carry cargo weight. The load must not exceed 150 lbs (68 kg), and it should be distributed uniformly over the cross rails. In addition, the roof rack does not increase the total load carrying capacity of the vehicle. Be sure the total load of cargo inside the vehicle plus that on the roof rack does not exceed the maximum vehicle load capacity.

NOTE: The roof rack side rails on your vehicle are NOT designed to carry a load without the addition of crossbars.

Metal crossbars are offered by Mopar accessories to provide a functional roof rack system. See your authorized dealer.

To Move The Crossbars

1. Loosen the knobs on top of each crossbar approximately six turns to disengage the clamp tooth from the side rail.

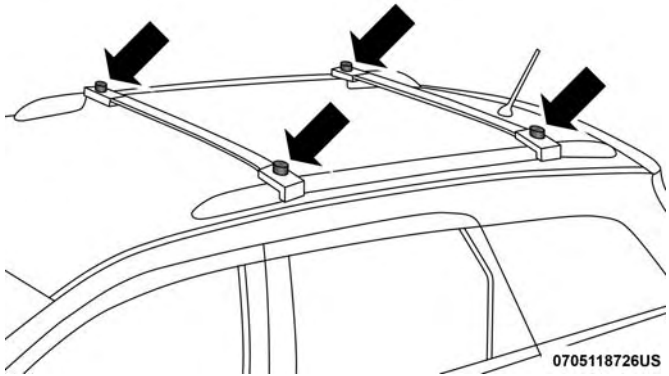

Crossbar Knobs

2. Relocate the crossbars, aligning the crossbar stanchions (end pieces) with one of the vertical marks on the outboard surface of the side rail for proper positioning. There are four frontward marks for the front crossbar and four rearward marks for the rear crossbar. Make sure the crossbars remain equally spaced or parallel at any position for proper function.
3. Tighten the knobs on each crossbar to lock it in position. As you tighten the knob, make sure the clamp tooth engages completely into the side rail slot.

4. Attempt to move the crossbar to ensure that it is locked in position.

NOTE:

- To help control wind noise when installing the crossbars, make sure the arrows marked on the underside of the crossbars face the front of the vehicle.
- To help reduce the amount of wind noise when the crossbars are not in use, fasten the front crossbar in the fourth position from the front and the rear crossbar in the eighth position. The tie down holes on the crossbar ends should always be used to tie down the load. Check the straps frequently to be sure that the load remains securely attached.

WARNING!

Cargo must be securely tied down before driving your vehicle. Improperly secured loads can fly off the vehicle, particularly at high speeds, resulting in personal injury or property damage. Follow the roof rack cautions when carrying cargo on your roof rack.

CAUTION!

- **To prevent damage to the roof of your vehicle, DO NOT carry any loads on the roof rack without the crossbars installed. The load should be secured and placed on top of the crossbars, not directly on the roof. If it is necessary to place the load on the roof, place a blanket or other protective layer between the load and the roof surface.**
- **Crossbars should remain equally spaced or parallel at any roof rack position for proper function. Noncompliance could result in damage to the roof rack, cargo, and vehicle.**
- **To avoid damage to the roof rack and vehicle, do not exceed the maximum roof rack load capacity of 150 lb (68 kg). Always distribute heavy loads as evenly as possible and secure the load appropriately.**
- **Long loads, which extend over the windshield, such as wood panels or surfboards, should be secured to both the front and rear of the vehicle.**
- **Travel at reduced speeds and turn corners carefully when carrying large or heavy loads on the roof rack. Wind forces, due to natural causes or nearby truck traffic, can add sudden upward loads. This is especially true on large flat loads and may result in damage to the cargo or your vehicle.**

GETTING TO KNOW YOUR INSTRUMENT PANEL

CONTENTS

■ INSTRUMENT CLUSTER 136

□ Instrument Cluster Descriptions 136

■ INSTRUMENT CLUSTER DISPLAY 138

□ Instrument Cluster Display Location And Controls 138

□ Oil Change Due 139

□ Display Menu Items 140

□ Battery Saver On/Battery Saver Mode Message — Electrical Load Reduction Actions — If Equipped 143

■ WARNING LIGHTS AND MESSAGES 145

□ Red Warning Lights 146

□ Yellow Warning Lights 150

□ Green Indicator Lights 153

□ White Indicator Lights 154

□ Blue Indicator Lights 154

■ ONBOARD DIAGNOSTIC SYSTEM — OBD II . . .154

□ Onboard Diagnostic System (OBD II) Cybersecurity 155

■ EMISSIONS INSPECTION AND MAINTENANCE PROGRAMS 156

INSTRUMENT CLUSTER

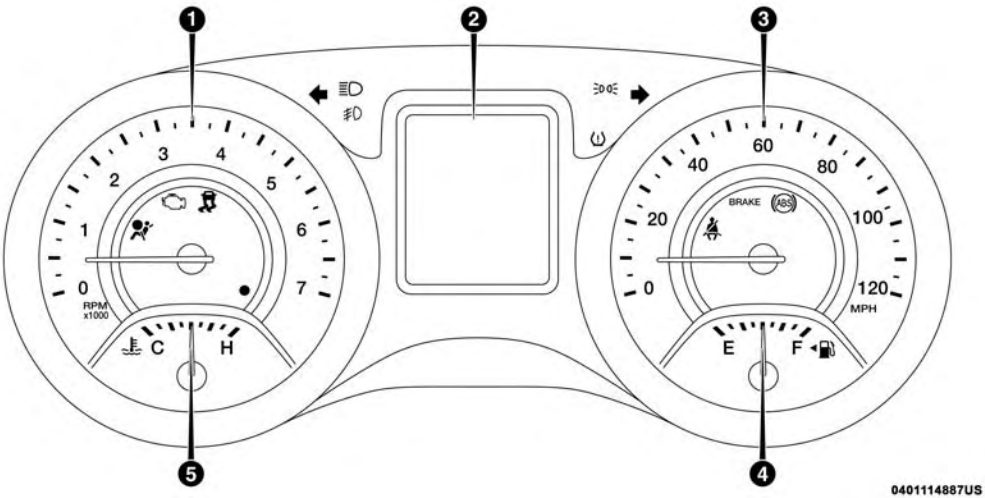

Instrument Cluster

Instrument Cluster Descriptions

1. Tachometer
   - Indicates the engine speed in revolutions per minute (RPM x 1000).
2. Instrument Cluster Display
   - When the appropriate conditions exist, this display shows the instrument cluster display messages. Refer to “Instrument Cluster Display” in “Getting To Know Your Instrument Panel” for further information.

3. Speedometer
   - Indicates vehicle speed.
4. Fuel Gauge
   - The pointer shows the level of fuel in the fuel tank when the Keyless Push Button Ignition is in the ON/RUN position.
   - The fuel pump symbol points to the side of the vehicle where the fuel door is located.
5. Temperature Gauge
   - The temperature gauge shows engine coolant temperature. Any reading within the normal range indicates that the engine cooling system is operating satisfactorily.
   - The gauge pointer will likely indicate a higher temperature when driving in hot weather, up mountain grades, or when towing a trailer. It should not be allowed to exceed the upper limits of the normal operating range.

WARNING!

A hot engine cooling system is dangerous. You or others could be badly burned by steam or boiling

(Continued)

WARNING! *(Continued)*

coolant. You may want to call an authorized dealer for service if your vehicle overheats. If you decide to look under the hood yourself, see "Servicing And Maintenance." Follow the warnings under the Cooling System Pressure Cap paragraph.

CAUTION!

Driving with a hot engine cooling system could damage your vehicle. If the temperature gauge reads "H," pull over and stop the vehicle. Idle the vehicle with the air conditioner turned off until the pointer drops back into the normal range. If the pointer remains on the "H," turn the engine off immediately and call an authorized dealer for service.

NOTE: The hard telltales will illuminate for a bulb check when the ignition is first cycled.

INSTRUMENT CLUSTER DISPLAY

Your vehicle may be equipped with an instrument cluster display, which offers useful information to the driver. With the ignition in the STOP/OFF mode, opening/closing of a door will activate the display for viewing, and display the total miles, or kilometers, in the odometer. Your instrument cluster display is designed to display important information about your vehicle's systems and features. Using a driver interactive display located on the instrument panel, your instrument cluster display can show you how systems are working and give you warnings when they are not. The steering wheel mounted controls allow you to scroll through the main menus and submenus. You can access the specific information you want and make selections and adjustments.

Instrument Cluster Display Location And Controls

The instrument cluster display features a driver-interactive display that is located in the instrument cluster.

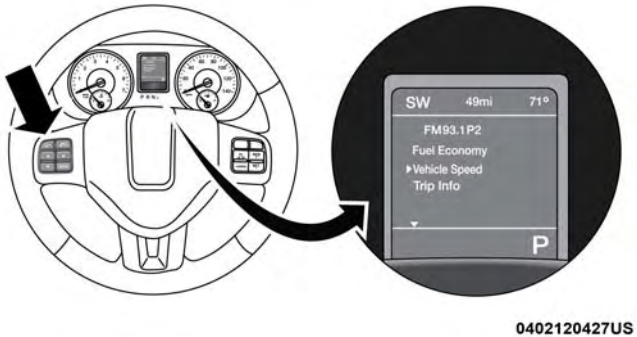

Instrument Cluster Display

This system allows the driver to select a variety of useful information by pushing the switches mounted on the steering wheel. The menu items consist of the following:

- Radio Info
- Fuel Economy
- Vehicle Speed
- Trip Info
- Tire Pressure
- Vehicle Information

- Messages
- Turn Menu OFF

The system allows the driver to select information by pushing the following buttons mounted on the steering wheel:

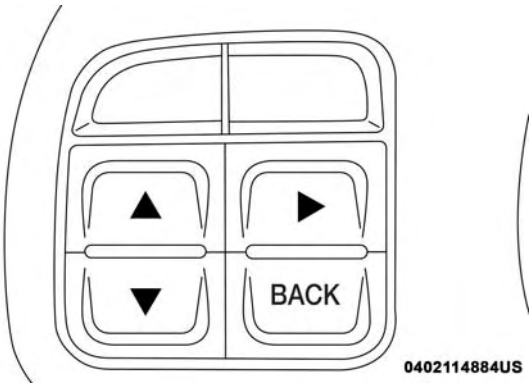

Instrument Cluster Display Controls

- Up Arrow Button

△

  - Push and release the **up** arrow button to scroll upward through the main menus and submenus.

- Down Arrow Button

▽

  - Push and release the **down** arrow button to scroll downward through the main menus and submenus.

- Right Arrow Button

▷

  - Push and release the **right** arrow button for access to main menus or submenus. Push and hold the **right** arrow button for two seconds to reset features.

- BACK Button

BACK

  - Push and release the **BACK** button to scroll back to a previous menu.

Oil Change Due

Your vehicle is equipped with an engine oil change indicator system. The "Oil Change Due" message will appear in the instrument cluster display for five seconds after a single chime has sounded to indicate the next scheduled oil change interval. The engine oil change indicator system is duty cycle based, which means the engine oil change interval may fluctuate dependent upon your personal driving style.

Unless reset, this message will continue to display each time you cycle the ignition to the ON/RUN position. To turn off the message temporarily, push and release the **up** arrow button. To reset the oil change indicator system (after performing the scheduled maintenance), perform the following procedure:

1. Without pushing the brake pedal, push and release the ENGINE START/STOP button and cycle the ignition to the ON/RUN position (do not start the engine).
2. Fully push the accelerator pedal, slowly, three times within 10 seconds.
3. Without pushing the brake pedal, push and release the ENGINE START/STOP button once to return the ignition to the OFF/LOCK position.

NOTE: If the indicator message illuminates when you start the vehicle, the oil change indicator system did not reset. If necessary, repeat this procedure.

Display Menu Items

Fuel Economy

Push and release the **up** or **down** arrow button until "Fuel Economy" displays highlighted in the instrument cluster display and push the **right** arrow button. The following Fuel Economy functions will display in the instrument cluster display:

- Average Fuel Economy
- Distance To Empty (DTE)
- Instantaneous Fuel Economy

Average Fuel Economy

Shows the average fuel economy since the last reset. When the fuel economy is reset, the display will read "RESET" or show dashes for two seconds. Then, the history information will be erased, and the averaging will continue from the last fuel average reading before the reset.

041041460

Fuel Economy

Distance To Empty (DTE)

Shows the estimated distance that can be traveled with the fuel remaining in the tank. This estimated distance is determined by a weighted average of the instantaneous and average fuel economy, according to the current fuel tank level. DTE cannot be reset through the **right** arrow button.

NOTE: Significant changes in driving style or vehicle loading will greatly affect the actual drivable distance of the vehicle, regardless of the DTE displayed value.

When the DTE value is less than 30 miles (48 km) estimated driving distance, the DTE display will change to a "LOW FUEL" message. This display will continue until the vehicle runs out of fuel. Adding a significant amount of fuel to the vehicle will turn off the "LOW FUEL" message and a new DTE value will display.

Instantaneous Fuel Economy

This display shows the instantaneous fuel economy MPG or L/ 100 km in bar graph form while driving. This will monitor the gas mileage in real-time as you drive and can be used to modify driving habits in order to increase fuel economy.

Vehicle Speed

Push and release the **up** or **down** arrow button until "Vehicle Speed" displays highlighted in the instrument cluster display. Push the **right** arrow button to display the current speed in MPH or km/h. Pushing the **right** arrow button a second time will toggle the unit of measure between MPH or km/h.

NOTE: Changing the unit of measure in the Vehicle Speed menu will not change the unit of measure in the instrument cluster display.

Trip Info

Push and release the **up** or **down** arrow button until "Trip Info" displays highlighted in the instrument cluster display and push the **right** arrow button. Pushing the **right** arrow button with "Trip Info" highlighted will cause the instrument cluster display to show Trip A, Trip B, and Elapsed Time all in one display. If you want to reset one of the three functions you use the **up** or **down** arrow button to highlight (select) the feature that you want to reset. Pushing the **right** arrow button will cause the selected feature to reset individually. The three features can only be reset individually. The following Trip functions display in the instrument cluster display:

- Trip A
- Trip B
- Elapsed Time

The Trip Functions mode displays the following information:

Trip A

- Shows the total distance traveled for Trip A since the last reset.
- Shows the elapsed time traveled for Trip A since the last reset.

Trip B

- Shows the total distance traveled for Trip B since the last reset.
- Shows the elapsed time traveled for Trip B since the last reset.

Elapsed Time

Shows the total elapsed time of travel since the last reset. Elapsed time will increment when the ignition is in the ON/RUN position.

To Reset The Display

Reset will only occur while a resettable function is being displayed. Push and release the right arrow button once to clear the resettable function.

Tire Pressure

Push and release the **up** or **down** arrow button until "Tire PSI:" displays highlighted in the instrument cluster display. Push and release the **right** arrow button to view a graphic of the vehicle with a tire pressure value at each corner of the graphic.

Vehicle Info (Customer Information Features)

Push and release the **up** or **down** arrow button until "Vehicle Info" displays in the instrument cluster display and push the **right** arrow button. Push the **up** or **down** arrow button to scroll through the available information displays.

- *Coolant Temperature*

Displays the actual coolant temperature.

- *Oil Temperature*

Displays the actual oil temperature.

- *Oil Pressure — If Equipped*

Displays the actual oil pressure.

- *Transmission Temperature*

Displays the actual transmission temperature.

- *Engine Hours*

Displays the number of hours of engine operation.

Messages

Push and release the **up** or **down** arrow button until "Messages: XX" displays highlighted in the instrument cluster display. If there is more than one message, pushing the **right** arrow button will display a stored warning message. Push and release the **up** or **down** arrow button if there is more than one message to step through the remaining stored messages. If there are no messages, pushing the **right** arrow button will not change the display.

Turn Menu OFF

Select from Main Menu using the **up** or **down** arrow button. Pushing the **right** arrow button clears the menu display. Pushing any one of the four Display control buttons will bring the menu back.

Battery Saver On/Battery Saver Mode Message — Electrical Load Reduction Actions — If Equipped

This vehicle is equipped with an Intelligent Battery Sensor (IBS) to perform additional monitoring of the electrical system and status of the vehicle battery.

In cases when the IBS detects charging system failure, or the vehicle battery conditions are deteriorating, electrical load reduction actions will take place to extend the driving time and distance of the vehicle. This is done by reducing power to or turning off non-essential electrical loads.

Load reduction is only active when the engine is running. It will display a message if there is a risk of battery

depletion to the point where the vehicle may stall due to lack of electrical supply, or will not restart after the current drive cycle.

When load reduction is activated, the message “Battery Saver On” or “Battery Saver Mode” will appear in the instrument cluster.

These messages indicate the vehicle battery has a low state of charge and continues to lose electrical charge at a rate that the charging system cannot sustain.

NOTE:

- The charging system is independent from load reduction. The charging system performs a diagnostic on the charging system continuously.
- If the Battery Charge Warning Light is on it may indicate a problem with the charging system. Refer to “Battery Charge Warning Light” in “Getting To Know Your Instrument Panel” for further information.

The electrical loads that may be switched off (if equipped), and vehicle functions which can be affected by load reduction:

- Heated Seat/Vented Seats/Heated Wheel
- Heated/Cooled Cup Holders — If Equipped
- Rear Defroster And Heated Mirrors
- HVAC System
- 115V AC Power Inverter System
- Audio and Telematics System

Loss of the battery charge may indicate one or more of the following conditions:

- The charging system cannot deliver enough electrical power to the vehicle system because the electrical loads are larger than the capability of charging system. The charging system is still functioning properly.
- Turning on all possible vehicle electrical loads (e.g. HVAC to max settings, exterior and interior lights, overloaded power outlets +12V, 115V AC, USB ports) during certain driving conditions (city driving, towing, frequent stopping).
- Installing options like additional lights, upfitter electrical accessories, audio systems, alarms and similar devices.
- Unusual driving cycles (short trips separated by long parking periods).

- The vehicle was parked for an extended period of time (weeks, months).
- The battery was recently replaced and was not charged completely.
- The battery was discharged by an electrical load left on when the vehicle was parked.
- The battery was used for an extended period with the engine not running to supply radio, lights, chargers, +12V portable appliances like vacuum cleaners, game consoles and similar devices.

What to do when an electrical load reduction action message is present ("Battery Saver On" or "Battery Saver Mode")

During a trip:

- Reduce power to unnecessary loads if possible:
  - Turn off redundant lights (interior or exterior)
  - Check what may be plugged in to power outlets +12V, 115V AC, USB ports
  - Check HVAC settings (blower, temperature)
  - Check the audio settings (volume)

After a trip:

- Check if any aftermarket equipment was installed (additional lights, upfitter electrical accessories, audio systems, alarms) and review specifications if any (load and Ignition Off Draw currents).
- Evaluate the latest driving cycles (distance, driving time and parking time).
- The vehicle should have service performed if the message is still present during consecutive trips and the evaluation of the vehicle and driving pattern did not help to identify the cause.

WARNING LIGHTS AND MESSAGES

The warning/indicator lights will illuminate in the instrument panel together with a dedicated message and/or acoustic signal when applicable. These indications are indicative and precautionary and as such must not be considered as exhaustive and/or alternative to the information contained in the Owner's Manual, which you are advised to read carefully in all cases. Always refer to the information in this chapter in the event of a failure indication. All active telltales will display first if applicable. The system check menu may appear different based upon equipment options and current vehicle status. Some telltales are optional and may not appear.

Red Warning Lights

— Seat Belt Reminder Warning Light

This light indicates when the driver or passenger seat belt is unbuckled. When the ignition is first placed in the ON/RUN or ACC/ON/RUN position and if the driver's seat belt is unbuckled, a chime will sound and the light will turn on. When driving, if the driver or front passenger seat belt remains unbuckled, the Seat Belt Reminder Light will flash or remain on continuously and a chime will sound. Refer to "Occupant Restraints Systems" in "Safety" for further information.

— Air Bag Warning Light

This light indicates a fault with the air bag, and will turn on for four to eight seconds as a bulb check when the ignition is placed in the ON/RUN or ACC/ON/RUN position. This light will illuminate with a single chime when a fault with the air bag has been detected, it will stay on until the fault is cleared. If the light is either not on during startup, stays on, or turns on while driving, have the system inspected at an authorized dealer as soon as possible.

BRAKE — Brake Warning Light

This light monitors various brake functions, including brake fluid level and parking brake application. If the brake light turns on it may indicate that the parking brake is applied, that the brake fluid level is low, or that there is a problem with the anti-lock brake system reservoir.

If the light remains on when the parking brake has been disengaged, and the fluid level is at the full mark on the master cylinder reservoir, it indicates a possible brake hydraulic system malfunction or that a problem with the Brake Booster has been detected by the Anti-Lock Brake System (ABS) / Electronic Stability Control (ESC) system. In this case, the light will remain on until the condition has been corrected. If the problem is related to the brake booster, the ABS pump will run when applying the brake, and a brake pedal pulsation may be felt during each stop.

The dual brake system provides a reserve braking capacity in the event of a failure to a portion of the hydraulic system. A leak in either half of the dual brake system is indicated by the Brake Warning Light, which will turn on when the brake fluid level in the master cylinder has dropped below a specified level.

The light will remain on until the cause is corrected.

NOTE: The light may flash momentarily during sharp cornering maneuvers, which change fluid level conditions. The vehicle should have service performed, and the brake fluid level checked.

If brake failure is indicated, immediate repair is necessary.

WARNING!
Driving a vehicle with the red brake light on is dangerous. Part of the brake system may have failed. It will take longer to stop the vehicle. You could have a collision. Have the vehicle checked immediately.

Vehicles equipped with the Anti-Lock Brake System (ABS) are also equipped with Electronic Brake Force Distribution (EBD). In the event of an EBD failure, the Brake Warning Light will turn on along with the ABS Light. Immediate repair to the ABS system is required.

Operation of the Brake Warning Light can be checked by turning the ignition switch from the OFF position to the ON/RUN position. The light should illuminate for approximately two seconds. The light should then turn off unless the parking brake is applied or a brake fault is detected. If the light does not illuminate, have the light inspected by your authorized dealer.

The light also will turn on when the parking brake is applied with the ignition switch in the ON/RUN position.

NOTE: This light shows only that the parking brake is applied. It does not show the degree of brake application.

● — Vehicle Security Warning Light — If Equipped

This light will flash at a fast rate for approximately 15 seconds when the vehicle security alarm is arming, and then will flash slowly until the vehicle is disarmed.

— Engine Coolant Temperature Warning Light

This light warns of an overheated engine condition. If the engine coolant temperature is too high, this indicator will illuminate and a single chime will sound. If the temperature reaches the upper limit, a continuous chime will be sound for four minutes or until the engine is able to cool: whichever comes first.

If the light turns on while driving, safely pull over and stop the vehicle. If the A/C system is on, turn it off. Also, shift the transmission into NEUTRAL and idle the vehicle. If the temperature reading does not return to normal, turn the engine off immediately and call for service. Refer to “If Your Engine Overheats” in “In Case Of Emergency” for further information.

— Transmission Temperature Warning Light — If Equipped

This light indicates high transmission fluid temperature. This may occur with strenuous usage such as trailer towing. If this light turns on, stop the vehicle and run the engine at idle or slightly faster, with the transmission in PARK or NEUTRAL, until the light turns off. Once the light turns off, you may continue to drive normally.

WARNING!

If you continue operating the vehicle when the Transmission Temperature Warning Light is illuminated you could cause the fluid to boil over, come in contact with hot engine or exhaust components and cause a fire.

CAUTION!

Continuous driving with the Transmission Temperature Warning Light illuminated will eventually cause severe transmission damage or transmission failure.

— Battery Charge Warning Light

This light illuminates when the battery is not charging properly. If it stays on while the engine is running, there may be a malfunction with the charging system. Contact your authorized dealer as soon as possible.

This indicates a possible problem with the electrical system or a related component.

— Oil Pressure Warning Light

This light indicates low engine oil pressure. If the light turns on while driving, stop the vehicle and shut off the engine as soon as possible. A chime will sound when this light turns on.

Do not operate the vehicle until the cause is corrected. This light does not indicate how much oil is in the engine. The engine oil level must be checked under the hood.

— Electronic Throttle Control (ETC) Warning Light

This light informs you of a problem with the Electronic Throttle Control (ETC) system. If a problem is detected while the vehicle is running, the light will either stay on or flash depending on the nature of the problem. Cycle the ignition when the vehicle is safely and completely stopped and the transmission is placed in the PARK position. The light should turn off. If the light remains on with the vehicle running, your vehicle will usually be drivable; however, see an authorized dealer for service as soon as possible.

NOTE: This light may turn on if the accelerator and brake pedals are pressed at the same time.

If the light continues to flash when the vehicle is running, immediate service is required and you may experience reduced performance, an elevated/rough idle, or engine stall and your vehicle may require towing. The light will come on when the ignition is placed in the ON/RUN or ACC/ON/RUN position and remain on briefly as a bulb check. If the light does not come on during starting, have the system checked by an authorized dealer.

— Electric Power Steering Fault Warning Light

This light will turn on when there's a fault with the EPS (Electric Power Steering) system. Refer to "Power Steering" in "Starting And Operating" for further information.

WARNING!

Continued operation with reduced assist could pose a safety risk to yourself and others. Service should be obtained as soon as possible.

— Door Open Warning Light — If Equipped

This indicator will illuminate when a door is ajar/open and not fully closed.

NOTE: If the vehicle is moving, there will also be a single chime.

— Liftgate Open Warning Light

This indicator will turn when the liftgate is open.

NOTE: If the vehicle is moving, there will also be a single chime.

Yellow Warning Lights

— Engine Check/Malfunction Indicator Warning Light (MIL)

The Engine Check/Malfunction Indicator Light (MIL) is a part of an Onboard Diagnostic System called OBD II that monitors engine and automatic transmission control systems. The light will illuminate when the ignition is in the ON/RUN position before engine start. If the bulb does not come on when turning the ignition switch from OFF to ON/RUN, have the condition checked promptly.

Certain conditions, such as a loose or missing gas cap, poor quality fuel, etc., may illuminate the light after engine start. The vehicle should be serviced if the light stays on through several typical driving styles. In most situations, the vehicle will drive normally and will not require towing.

When the engine is running, the MIL may flash to alert serious conditions that could lead to immediate loss of power or severe catalytic converter damage. The vehicle should be serviced as soon as possible if this occurs.

WARNING!

A malfunctioning catalytic converter, as referenced above, can reach higher temperatures than in normal operating conditions. This can cause a fire if you drive slowly or park over flammable substances such as dry plants, wood, cardboard, etc. This could result in death or serious injury to the driver, occupants or others.

CAUTION!

Prolonged driving with the Malfunction Indicator Light (MIL) on could cause damage to the vehicle control system. It also could affect fuel economy and driveability. If the MIL is flashing, severe catalytic converter damage and power loss will soon occur. Immediate service is required.

— Electronic Stability Control (ESC) Active Warning Light — If Equipped

This light will indicate when the Electronic Stability Control system is Active. The "ESC Indicator Light" in the instrument cluster will come on when the ignition is placed in the ON/RUN or ACC/ON/RUN position, and when ESC is activated. It should go out with the engine running. If the "ESC Indicator Light" comes on continuously with the engine running, a malfunction has been detected in the ESC system. If this light remains on after several ignition cycles, and the vehicle has been driven several miles (kilometers) at speeds greater than 30 mph (48 km/h), see your authorized dealer as soon as possible to have the problem diagnosed and corrected.

- The "ESC Off Indicator Light" and the "ESC Indicator Light" come on momentarily each time the ignition is placed in the ON/RUN or ACC/ON/RUN position.
- The ESC system will make buzzing or clicking sounds when it is active. This is normal; the sounds will stop when ESC becomes inactive.
- This light will come on when the vehicle is in an ESC event.

— Electronic Stability Control (ESC) Off Warning Light — If Equipped

This light indicates the Electronic Stability Control (ESC) is off.

Each time the ignition is turned to ON/RUN or ACC/ON/RUN, the ESC system will be on, even if it was turned off previously.

— Tire Pressure Monitoring System (TPMS) Warning Light

The warning light switches on and a message is displayed to indicate that the tire pressure is lower than the recommended value and/or that slow pressure loss is occurring. In these cases, optimal tire duration and fuel consumption may not be guaranteed.

Should one or more tires be in the condition mentioned above, the display will show the indications corresponding to each tire in sequence.

CAUTION!

Do not continue driving with one or more flat tires as handling may be compromised. Stop the vehicle, avoiding sharp braking and steering. If a tire puncture occurs, repair immediately using the dedicated tire repair kit and contact your authorized dealer as soon as possible.

Each tire, including the spare (if provided), should be checked monthly when cold and inflated to the inflation pressure recommended by the vehicle manufacturer on the vehicle placard or tire inflation pressure label. (If your vehicle has tires of a different size than the size indicated on the vehicle placard or tire inflation pressure label, you should determine the proper tire inflation pressure for those tires.)

As an added safety feature, your vehicle has been equipped with a tire pressure monitoring system (TPMS) that illuminates a low tire pressure telltale when one or more of your tires is significantly under-inflated. Accordingly, when the low tire pressure telltale illuminates, you should stop and check your tires as soon as possible, and inflate them to the proper pressure. Driving on a significantly under-inflated tire causes the tire to overheat and can lead to tire failure. Under-inflation also reduces fuel efficiency and tire tread life, and may affect the vehicle's handling and stopping ability.

Please note that the TPMS is not a substitute for proper tire maintenance, and it is the driver's responsibility to maintain correct tire pressure, even if under-inflation has not reached the level to trigger illumination of the TPMS low tire pressure telltale.

Your vehicle has also been equipped with a TPMS malfunction indicator to indicate when the system is not operating properly. The TPMS malfunction indicator is combined with the low tire pressure telltale. When the system detects a malfunction, the telltale will flash for approximately one minute and then remain continuously illuminated. This sequence will continue upon subsequent vehicle start-ups as long as the malfunction exists. When the malfunction indicator is illuminated, the system may not be able to detect or signal low tire pressure as intended. TPMS malfunctions may occur for a variety of reasons, including the installation of replacement or alternate tires or wheels on the vehicle that prevent the TPMS from functioning properly. Always check the TPMS malfunction telltale after replacing one or more tires or wheels on your vehicle to

ensure that the replacement or alternate tires and wheels allow the TPMS to continue to function properly.

CAUTION!

The TPMS has been optimized for the original equipment tires and wheels. TPMS pressures and warning have been established for the tire size equipped on your vehicle. Undesirable system operation or sensor damage may result when using replacement equipment that is not of the same size, type, and/or style. Aftermarket wheels can cause sensor damage. Using aftermarket tire sealants may cause the Tire Pressure Monitoring System (TPMS) sensor to become inoperable. After using an aftermarket tire sealant it is recommended that you take your vehicle to your authorized dealer to have your sensor function checked.

(ABS) — Anti-Lock Brake (ABS) Warning Light

This light monitors the Anti-Lock Brake System (ABS). The light will turn on when the ignition is placed in the ON/RUN or ACC/ON/RUN position and may stay on for as long as four seconds.

If the ABS light remains on or turns on while driving, then the Anti-Lock portion of the brake system is not functioning and service is required as soon as possible. However, the conventional brake system will continue to operate normally, assuming the Brake Warning Light is not also on.

If the ABS light does not turn on when the ignition is placed in the ON/RUN or ACC/ON/RUN position, have the brake system inspected by an authorized dealer.

— Low Fuel Warning Light

When the fuel level reaches approximately 2 gal (7.5 L), this light will turn on and a chime will sound. The light will remain on until fuel is added.

— Low Washer Fluid Warning Light — If Equipped

This indicator will illuminate when the windshield washer fluid is low.

Green Indicator Lights

— Park/Headlight On Indicator Light

This indicator will illuminate when the park lights or headlights are turned on.

— Front Fog Indicator Light — If Equipped

This indicator will illuminate when the front fog lights are on.

— Turn Signal Indicator Lights

When the left or right turn signal is activated, the turn signal indicator will flash independently and the corresponding exterior turn signal lamps will flash. Turn signals can be activated when the multifunction lever is moved down (left) or up (right).

NOTE:

- A continuous chime will sound if the vehicle is driven more than 1 mile (1.6 km) with either turn signal on.
- Check for an inoperative outside light bulb if either indicator flashes at a rapid rate.

— Cruise Control Set Indicator Light — If Equipped

This light will turn on when the speed control is set to the desired speed. Refer to “Speed Control” in “Starting And Operating” for further information.

White Indicator Lights

— Cruise Control Ready Indicator

This light will turn on when the speed control is ready, but not set.

Blue Indicator Lights

— High Beam Indicator Light

This indicator shows that the high beam headlights are on. With the low beams activated, push the multifunction lever forward (toward the front of the vehicle) to turn on the high beams. Pull the multifunction lever rearward (toward the rear of the vehicle) to turn off the high beams. If the high beams are off, pull the lever toward you for a temporary high beam on, ″flash to pass″ scenario.

ONBOARD DIAGNOSTIC SYSTEM — OBD II

Your vehicle is equipped with a sophisticated Onboard Diagnostic system called OBD II. This system monitors the performance of the emissions, engine, and transmission control systems. When these systems are operating properly, your vehicle will provide excellent performance and fuel economy, as well as engine emissions well within current government regulations.

If any of these systems require service, the OBD II system will turn on the Malfunction Indicator Light (MIL). It will also store diagnostic codes and other information to assist your service technician in making repairs. Although your vehicle will usually be drivable and not need towing, see your authorized dealer for service as soon as possible.

CAUTION!

- **Prolonged driving with the MIL on could cause further damage to the emission control system. It could also affect fuel economy and driveability. The vehicle must be serviced before any emissions tests can be performed.**
- **If the MIL is flashing while the vehicle is running, severe catalytic converter damage and power loss will soon occur. Immediate service is required.**

Onboard Diagnostic System (OBD II) Cybersecurity

Your vehicle is required to have an Onboard Diagnostic system (OBD II) and a connection port to allow access to information related to the performance of your emissions controls. Authorized service technicians may need to access this information to assist with the diagnosis and service of your vehicle and emissions system.

WARNING!

- **ONLY an authorized service technician should connect equipment to the OBD II connection port in order to diagnose or service your vehicle.**
- **If unauthorized equipment is connected to the OBD II connection port, such as a driver-behavior tracking device, it may:**
  - **Be possible that vehicle systems, including safety related systems, could be impaired or a loss of vehicle control could occur that may result in an accident involving serious injury or death.**
  - **Access, or allow others to access, information stored in your vehicle systems, including personal information.**

For further information, refer to “Cybersecurity” in “Multimedia”.

EMISSIONS INSPECTION AND MAINTENANCE PROGRAMS

In some localities, it may be a legal requirement to pass an inspection of your vehicle's emissions control system. Failure to pass could prevent vehicle registration.

For states that require an Inspection and Maintenance (I/M), this check verifies the "Malfunction Indicator Light (MIL)" is functioning and is not on when the engine is running, and that the OBD II system is ready for testing.

Normally, the OBD II system will be ready. The OBD II system may **not** be ready if your vehicle was recently serviced, recently had a dead battery or a battery replacement. If the OBD II system should be determined not ready for the I/M test, your vehicle may fail the test.

Your vehicle has a simple ignition actuated test, which you can use prior to going to the test station. To check if your vehicle's OBD II system is ready, you must do the following:

1. Cycle the ignition switch to the ON position, but do not crank or start the engine.

NOTE: If you crank or start the engine, you will have to start this test over.

2. As soon as you cycle the ignition switch to the ON position, you will see the "Malfunction Indicator Light (MIL)" symbol come on as part of a normal bulb check.
3. Approximately 15 seconds later, one of two things will happen:

- The MIL will flash for about ten seconds and then return to being fully illuminated until you turn OFF the ignition or start the engine. This means that your vehicle's OBD II system is **not ready** and you should **not** proceed to the I/M station.
- The MIL will not flash at all and will remain fully illuminated until you place the ignition in the off position or start the engine. This means that your vehicle's OBD II system is **ready** and you can proceed to the I/M station.

If your OBD II system is **not ready,** you should see your authorized dealer or repair facility. If your vehicle was recently serviced or had a battery failure or replacement, you may need to do nothing more than drive your vehicle as you normally would in order for your OBD II system to update. A recheck with the above test routine may then indicate that the system is **now ready**.

Regardless of whether your vehicle's OBD II system is ready or not, if the MIL is illuminated during normal vehicle operation you should have your vehicle serviced before going to the I/M station. The I/M station can fail your vehicle because the MIL is on with the engine running.

SAFETY

CONTENTS

■ SAFETY FEATURES 160
- □ Anti-Lock Brake System (ABS) 160
- □ Electronic Brake Control System 161

■ AUXILIARY DRIVING SYSTEMS 170
- □ Tire Pressure Monitoring System (TPMS) 170

■ OCCUPANT RESTRAINT SYSTEMS 176
- □ Occupant Restraint Systems Features 176
- □ Important Safety Precautions 176
- □ Seat Belt Systems 177
- □ Supplemental Restraint Systems (SRS) 190
- □ Child Restraints 203
- □ Transporting Pets 225

■ SAFETY TIPS 225
- □ Transporting Passengers 225
- □ Exhaust Gas 226
- □ Safety Checks You Should Make Inside The Vehicle 226
- □ Periodic Safety Checks You Should Make Outside The Vehicle 229

SAFETY FEATURES

Anti-Lock Brake System (ABS)

The Anti-Lock Brake System (ABS) provides increased vehicle stability and brake performance under most braking conditions. The system automatically prevents wheel lock, and enhances vehicle control during braking.

The ABS performs a self-check cycle to ensure that the ABS is working properly each time the vehicle is started and driven. During this self-check, you may hear a slight clicking sound as well as some related motor noises.

ABS is activated during braking when the system detects one or more wheels begin to lock. Road conditions such as ice, snow, gravel, bumps, railroad tracks, loose debris, or panic stops may increase the likelihood of ABS activation(s).

You also may experience the following when ABS activates:

- The ABS motor noise (it may continue to run for a short time after the stop).
- The clicking sound of solenoid valves.
- Brake pedal pulsations.
- A slight drop of the brake pedal at the end of the stop.

These are all normal characteristics of ABS.

WARNING!

- **The ABS contains sophisticated electronic equipment that may be susceptible to interference caused by improperly installed or high output radio transmitting equipment. This interference can cause possible loss of anti-lock braking capability. Installation of such equipment should be performed by qualified professionals.**
- **Pumping of the Anti-Lock Brakes will diminish their effectiveness and may lead to a collision. Pumping makes the stopping distance longer. Just press firmly on your brake pedal when you need to slow down or stop.**
- **The ABS cannot prevent the natural laws of physics from acting on the vehicle, nor can it increase braking or steering efficiency beyond that afforded by the condition of the vehicle brakes and tires or the traction afforded.**
- **The ABS cannot prevent collisions, including those resulting from excessive speed in turns, following another vehicle too closely, or hydroplaning.**

(Continued)

WARNING! ***(Continued)***

- **The capabilities of an ABS equipped vehicle must never be exploited in a reckless or dangerous manner that could jeopardize the user's safety or the safety of others.**

ABS is designed to function with the OEM tires. Modification may result in degraded ABS performance.

Anti-Lock Brake Warning Light

The yellow "Anti-Lock Brake Warning Light" will turn on when the ignition is turned to the ON/RUN mode and may stay on for as long as four seconds.

If the "Anti-Lock Brake Warning Light" remains on or comes on while driving, it indicates that the anti-lock portion of the brake system is not functioning and that service is required. However, the conventional brake system will continue to operate normally if the "Brake System Warning Light" is not on.

If the "Anti-Lock Brake Warning Light" is on, the brake system should be serviced as soon as possible to restore the benefits of anti-lock brakes. If the "Anti-Lock Brake Warning Light" does not come on when the ignition is turned to the ON/RUN mode, have the light repaired as soon as possible.

Electronic Brake Control System

Your vehicle is equipped with an advanced Electronic Brake Control system (EBC). This system includes Electronic Brake Force Distribution (EBD), Anti-Lock Brake System (ABS), Brake Assist System (BAS), Hill Start Assist (HSA), Traction Control System (TCS), Electronic Stability Control (ESC), and Electronic Roll Mitigation (ERM). These systems work together to enhance both vehicle stability and control in various driving conditions.

Your vehicle may also be equipped with Trailer Sway Control (TSC).

Brake Assist System (BAS)

The BAS is designed to optimize the vehicle's braking capability during emergency braking maneuvers. The system detects an emergency braking situation by sensing the rate and amount of brake application and then applies optimum pressure to the brakes. This can help reduce braking distances. The BAS complements the anti-lock brake system (ABS). Applying the brakes very quickly results in the best BAS assistance. To receive the benefit of the system, you must apply continuous braking pressure during the stopping sequence, (do not "pump" the brakes). Do not reduce brake pedal pressure unless braking is no longer desired. Once the brake pedal is released, the BAS is deactivated.

WARNING!

The Brake Assist System (BAS) cannot prevent the natural laws of physics from acting on the vehicle, nor can it increase the traction afforded by prevailing road conditions. BAS cannot prevent collisions, including those resulting from excessive speed in turns, driving on very slippery surfaces, or hydroplaning. The capabilities of a BAS-equipped vehicle must never be

(Continued)

WARNING! *(Continued)*

exploited in a reckless or dangerous manner, which could jeopardize the user's safety or the safety of others.

Brake System Warning Light

The red "Brake System Warning Light" will turn on when the ignition is turned to the ON/RUN mode and may stay on for as long as four seconds.

If the "Brake System Warning Light" remains on or comes on while driving, it indicates that the brake system is not functioning properly and that immediate service is required. If the "Brake System Warning Light" does not come on when the ignition is turned to the ON/RUN mode, have the light repaired as soon as possible.

Electronic Brake Force Distribution (EBD)

This function manages the distribution of the braking torque between the front and rear axles by limiting braking pressure to the rear axle. This is done to prevent overslip of the rear wheels to avoid vehicle instability, and to prevent the rear axle from entering ABS before the front axle.

Electronic Roll Mitigation (ERM)

This system anticipates the potential for wheel lift by monitoring the driver's steering wheel input and the speed of the vehicle. When ERM determines that the rate of change of the steering wheel angle and vehicle's speed are sufficient to potentially cause wheel lift, it then applies the appropriate brake and may also reduce engine power to lessen the chance that wheel lift will occur. ERM can only reduce the chance of wheel lift occurring during severe or evasive driving maneuvers; it cannot prevent wheel lift due to other factors, such as road conditions, leaving the roadway, or striking objects or other vehicles.

WARNING!

Many factors, such as vehicle loading, road conditions and driving conditions, influence the chance that wheel lift or rollover may occur. ERM cannot prevent all wheel lift or roll overs, especially those that involve leaving the roadway or striking objects or other vehicles. The capabilities of an ERM-equipped vehicle must never be exploited in a reckless or dangerous manner which could jeopardize the user's safety or the safety of others.

Electronic Stability Control (ESC)

This system enhances directional control and stability of the vehicle under various driving conditions. ESC corrects for oversteering or understeering of the vehicle by applying the brake of the appropriate wheel(s) to assist in counteracting the oversteer or understeer condition. Engine power may also be reduced to help the vehicle maintain the desired path.

ESC uses sensors in the vehicle to determine the vehicle path intended by the driver and compares it to the actual path of the vehicle. When the actual path does not match the intended path, ESC applies the brake of the appropriate wheel to assist in counteracting the oversteer or understeer condition.

- Oversteer — when the vehicle is turning more than appropriate for the steering wheel position.
- Understeer — when the vehicle is turning less than appropriate for the steering wheel position.

The "ESC Activation/Malfunction Indicator Light" located in the instrument cluster will start to flash as soon as the ESC system becomes active. The "ESC Activation/Malfunction Indicator Light" also flashes when the TCS is active. If the "ESC Activation/Malfunction Indicator Light" begins to flash during acceleration, ease up on the accelerator and apply as little throttle as possible. Be sure to adapt your speed and driving to the prevailing road conditions.

WARNING!

- **Electronic Stability Control (ESC) cannot prevent the natural laws of physics from acting on the vehicle, nor can it increase the traction afforded by prevailing road conditions. ESC cannot prevent accidents, including those resulting from excessive speed in turns, driving on very slippery surfaces, or hydroplaning. ESC also cannot prevent accidents resulting from loss of vehicle control due to inappropriate**

(Continued)

WARNING! ***(Continued)***

driver input for the conditions. Only a safe, attentive, and skillful driver can prevent accidents. The capabilities of an ESC equipped vehicle must never be exploited in a reckless or dangerous manner which could jeopardize the user's safety or the safety of others.

- **Vehicle modifications, or failure to properly maintain your vehicle, may change the handling characteristics of your vehicle, and may negatively affect the performance of the ESC system. Changes to the steering system, suspension, braking system, tire type and size or wheel size may adversely affect ESC performance. Improperly inflated and unevenly worn tires may also degrade ESC performance. Any vehicle modification or poor vehicle maintenance that reduces the effectiveness of the ESC system can increase the risk of loss of vehicle control, vehicle rollover, personal injury and death.**

ESC Operating Modes

NOTE: Depending upon model and mode of operation, the ESC system may have multiple operating modes.

ESC On

This is the normal operating mode for the ESC. Whenever the vehicle is started, the ESC system will be in this mode. This mode should be used for most driving conditions. Alternate ESC modes should only be used for specific reasons as noted in the following paragraphs.

Partial Off

The "Partial Off" mode is intended for times when a more spirited driving experience is desired. This mode may modify TCS and ESC thresholds for activation, which allows for more wheel spin than normally allowed. This mode may be useful if the vehicle becomes stuck.

To enter the "Partial Off" mode, momentarily push the "ESC Off" switch and the "ESC Off Indicator Light" will illuminate. To turn the ESC on again, momentarily push the "ESC Off" switch and the "ESC Off Indicator Light" will turn off.

WARNING!

- **When in "Partial Off" mode, the TCS functionality of ESC, (except for the limited slip feature described in the TCS section), has been disabled and the "ESC Off Indicator Light" will be illuminated. When in "Partial Off" mode, the engine power reduction feature of TCS is disabled, and the enhanced vehicle stability offered by the ESC system is reduced.**
- **Trailer Sway control (TSC) is disabled when the ESC system is in the "Partial Off" mode.**

WARNING!

The Electronic Stability Control (ESC) cannot prevent the natural laws of physics from acting on the vehicle, nor can it increase the traction afforded by prevailing road conditions. ESC cannot prevent all accidents, including those resulting from excessive speed in turns, driving on very slippery surfaces, or hydroplaning. ESC also cannot prevent collisions.

ESC Activation/Malfunction Indicator Light And ESC OFF Indicator Light

The "ESC Activation/Malfunction Indicator Light" in the instrument cluster will come on when the ignition is turned to the ON mode. It should go out with the engine running. If the "ESC Activation/Malfunction Indicator Light" comes on continuously with the engine running, a malfunction has been detected in the ESC system. If this light remains on after several ignition cycles, and the vehicle has been driven several miles (kilometers) at speeds greater than 30 mph (48 km/h), see your authorized dealer as soon as possible to have the problem diagnosed and corrected.

The "ESC Activation/Malfunction Indicator Light" (located in the instrument cluster) starts to flash as soon as the tires lose traction and the ESC system becomes active. The "ESC Activation/Malfunction Indicator Light" also flashes when TCS is active. If the "ESC Activation/Malfunction Indicator Light" begins to flash during acceleration, ease up on the accelerator and apply as little throttle as possible. Be sure to adapt your speed and driving to the prevailing road conditions.

NOTE:

- The "ESC Activation/Malfunction Indicator Light" and the "ESC OFF Indicator Light" come on momentarily each time the ignition is turned ON.
- Each time the ignition is turned ON, the ESC system will be on even if it was turned off previously.
- The ESC system will make buzzing or clicking sounds when it is active. This is normal; the sounds will stop when ESC becomes inactive following the maneuver that caused the ESC activation.

The "ESC OFF Indicator Light" indicates the customer has elected to have the Electronic Stability Control (ESC) in a reduced mode.

Hill Start Assist (HSA)

The HSA system is designed to mitigate roll back from a complete stop while on an incline. If the driver releases the brake while stopped on an incline, HSA will continue to hold the brake pressure for a short period. If the driver does not apply the throttle before this time expires, the system will release brake pressure and the vehicle will roll down the hill as normal.

The following conditions must be met in order for HSA to activate:

- The feature must be enabled.
- The vehicle must be stopped.
- Park brake must be off.
- Driver door must be closed.
- The vehicle must be on a sufficient grade.
- The gear selection must match vehicle uphill direction (i.e., vehicle facing uphill is in forward gear; vehicle backing uphill is in REVERSE gear).
- HSA will work in REVERSE gear and all forward gears. The system will not activate if the transmission is in PARK or NEUTRAL. For vehicles equipped with a manual transmission, if the clutch is pressed, HSA will remain active.

WARNING!

There may be situations where the Hill Start Assist (HSA) will not activate and slight rolling may occur, such as on minor hills or with a loaded vehicle, or while pulling a trailer. HSA is not a substitute for active driving involvement. It is always the driver's responsibility to be attentive to distance to other vehicles, people, and objects, and most importantly brake operation to ensure safe operation of the vehicle under all road conditions. Your complete attention is always required while driving to maintain safe control of your vehicle. Failure to follow these warnings can result in a collision or serious personal injury.

Towing With HSA

HSA will also provide assistance to mitigate roll back while towing a trailer.

WARNING!

- **If you use a trailer brake controller with your trailer, the trailer brakes may be activated and deactivated with the brake switch. If so, there may not be enough brake pressure to hold both the vehicle and the trailer on a hill when the brake pedal is released. In order to avoid rolling down an incline while resuming acceleration, manually activate the trailer brake or apply more vehicle brake pressure prior to releasing the brake pedal.**
- **HSA is not a parking brake. Always apply the parking brake fully when exiting your vehicle. Also, be certain to place the transmission in PARK.**
- **Failure to follow these warnings can result in a collision or serious personal injury.**

Disabling And Enabling HSA

This feature can be turned on or turned off. To change the current setting, proceed as follows:

- If disabling HSA using your instrument cluster display, refer to "Instrument Cluster Display" in "Getting To Know Your Instrument Panel" for further information.
- If disabling HSA using Uconnect Settings, refer to "Uconnect Settings" in "Multimedia" for further information.

For vehicles not equipped with an instrument cluster display, perform the following steps:

1. Center the steering wheel (front wheels pointing straight forward).
2. Shift the transmission into PARK.
3. Apply the parking brake.
4. Start the engine.
5. Rotate the steering wheel slightly more than one-half turn to the left.
6. Push the "ESC Off" button located in the lower switch bank below the climate control four times within 20 seconds. The "ESC Off Indicator Light" should turn on and turn off two times.
7. Rotate the steering wheel back to center and then an additional slightly more than one-half turn to the right.

8. Turn the ignition to the OFF mode and then back to ON. If the sequence was completed properly, the "ESC Off Indicator Light" will blink several times to confirm HSA is disabled.

9. Repeat these steps if you want to return this feature to its previous setting.

Traction Control System (TCS)

This system monitors the amount of wheel spin of each of the driven wheels. If wheel spin is detected, the TCS may apply brake pressure to the spinning wheel(s) and/or reduce engine power to provide enhanced acceleration and stability. A feature of the TCS, Brake Limited Differential (BLD), functions similar to a limited slip differential and controls the wheel spin across a driven axle. If one wheel on a driven axle is spinning faster than the other, the system will apply the brake of the spinning wheel. This will allow more engine torque to be applied to the wheel that is not spinning. BLD may remain enabled even if TCS and ESC are in a reduced mode.

Trailer Sway Control (TSC)

TSC uses sensors in the vehicle to recognize an excessively swaying trailer and will take the appropriate actions to attempt to stop the sway. TSC will become active automatically once an excessively swaying trailer is recognized. Note that TSC cannot stop all trailers from swaying. Always use caution when towing a trailer and follow the trailer tongue weight recommendations. Refer to "Trailer Towing" in "Starting And Operating" for further information.

When TSC is functioning, the "ESC Activation/ Malfunction Indicator Light" will flash, the engine power may be reduced and you may feel the brakes being applied to individual wheels to attempt to stop the trailer from swaying. TSC is disabled when the ESC system is in the "Partial Off" mode.

WARNING!

If TSC activates while driving, slow the vehicle down, stop at the nearest safe location, and adjust the trailer load to eliminate trailer sway.

AUXILIARY DRIVING SYSTEMS

Tire Pressure Monitoring System (TPMS)

The Tire Pressure Monitor System (TPMS) will warn the driver of a low tire pressure based on the vehicle recommended cold placard pressure.

The tire pressure will vary with temperature by about 1 psi (7 kPa) for every 12°F (6.5°C). This means that when the outside temperature decreases, the tire pressure will decrease. Tire pressure should always be set based on cold inflation tire pressure. This is defined as the tire pressure after the vehicle has not been driven for at least three hours, or driven less than 1 mile (1.6 km) after a three hour period. The cold tire inflation pressure must not exceed the maximum inflation pressure molded into the tire sidewall. Refer to "Tires" in "Servicing And Maintenance" for information on how to properly inflate the vehicle's tires. The tire pressure will also increase as the vehicle is driven. This is normal and there should be no adjustment for this increased pressure.

The TPMS will warn the driver of a low tire pressure if the tire pressure falls below the low-pressure warning limit for any reason, including low temperature effects and natural pressure loss through the tire.

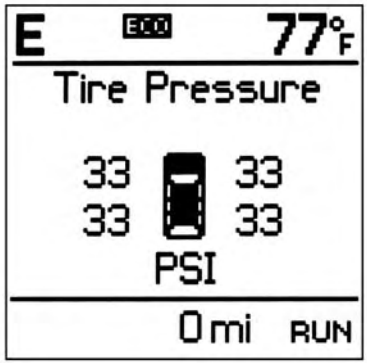

Tire Pressure Monitor Display

The TPMS will continue to warn the driver of low tire pressure as long as the condition exists, and will not turn off until the tire pressure is at or above the recommended cold placard pressure. Once the low tire pressure warning (Tire Pressure Monitoring Telltale Light) illuminates, you must increase the tire pressure to the recommended cold placard pressure in order for the "Tire Pressure Monitoring Telltale Light" to turn off.

NOTE: When filling warm tires, the tire pressure may need to be increased up to an additional 4 psi (30 kPa) above the recommended cold placard pressure in order to turn the Tire Pressure Monitoring Telltale Light off.

The system will automatically update and the "Tire Pressure Monitoring Telltale Light" will turn off once the system receives the updated tire pressures. The vehicle may need to be driven for up to 20 minutes above 15 mph (24 km/h) in order for the TPMS to receive this information.

For example, your vehicle may have a recommended cold (parked for more than three hours) placard pressure of 33 psi (227 kPa). If the ambient temperature is 68°F (20°C) and the measured tire pressure is 28 psi (193 kPa), a temperature drop to 20°F (-7°C) will decrease the tire pressure to approximately 24 psi (165 kPa). This tire pressure is low enough to turn ON the "Tire Pressure Monitoring Telltale Light". Driving the vehicle may cause the tire pressure to rise to approximately 28 psi (193 kPa), but the "Tire Pressure Monitoring Telltale Light" will still be on. In this situation, the "Tire Pressure Monitoring Telltale Light" will turn off only after the tires are inflated to the vehicle's recommended cold placard pressure value.

CAUTION!

- **The TPMS has been optimized for the original equipment tires and wheels. TPMS pressures and**

(Continued)

CAUTION! ***(Continued)***

warnings have been established for the tire size equipped on your vehicle. Undesirable system operation or sensor damage may result when using replacement equipment that is not of the same size, type, and/or style. The TPM sensor is not designed for use on aftermarket wheels and may contribute to a poor overall system performance or sensor damage. Customers are encouraged to use OEM wheels to assure proper TPM feature operation.

- **Using aftermarket tire sealants may cause the Tire Pressure Monitoring System (TPMS) sensor to become inoperable. After using an aftermarket tire sealant it is recommended that you take your vehicle to an authorized dealership to have your sensor function checked.**
- **After inspecting or adjusting the tire pressure, always reinstall the valve stem cap. This will prevent moisture and dirt from entering the valve stem, which could damage the TPM sensor.**

NOTE:

- The TPMS is not intended to replace normal tire care and maintenance, or to provide warning of a tire failure or condition.
- The TPMS should not be used as a tire pressure gauge while adjusting your tire pressure.
- Driving on a significantly under-inflated tire causes the tire to overheat and can lead to tire failure. Under-inflation also reduces fuel efficiency and tire tread life, and may affect the vehicle's handling and stopping ability.
- The TPMS is not a substitute for proper tire maintenance, and it is the driver's responsibility to maintain correct tire pressure using an accurate tire pressure gauge, even if under-inflation has not reached the level to trigger illumination of the "Tire Pressure Monitoring Telltale Light".
- Seasonal temperature changes will affect tire pressure, and the TPMS will monitor the actual tire pressure in the tire.

Premium System

The Tire Pressure Monitor System (TPMS) uses wireless technology with wheel rim mounted electronic sensors to monitor tire pressure levels. Sensors, mounted to each wheel as part of the valve stem, transmit tire pressure readings to the receiver module.

NOTE: It is particularly important for you to check the tire pressure in all of the tires on your vehicle monthly and to maintain the proper pressure.

The TPMS consists of the following components:

- Receiver module
- Four tire pressure monitoring sensors
- Various tire pressure monitoring system messages, which display in the instrument cluster
- Tire pressure monitoring telltale light

Tire Pressure Monitoring Low Pressure Warnings

The "Tire Pressure Monitoring Telltale Light" will illuminate in the instrument cluster and a chime will sound when tire pressure is low in one or more of the four active road tires. In addition, the instrument cluster will display a graphic of each tire with the low tire pressure values in a different color, an "Inflate to XX" message will also be displayed.

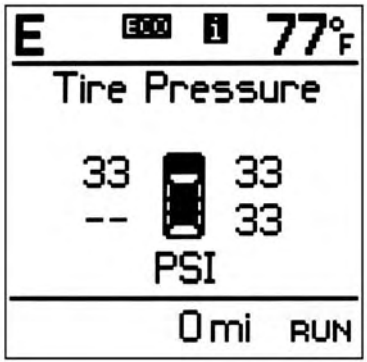

055838856

Tire Pressure Monitor Display

Should this occur, you should stop as soon as possible and inflate the tires with low pressure (those in a different color in the instrument cluster display graphic) to the vehicle's recommended cold placard pressure value as shown in the "Inflate to XX"" message. Once the system receives the updated tire pressures, the system will automatically update and the graphic display in the instrument cluster will change color back to the original color, and the "Tire Pressure Monitoring Telltale Light" will turn off.

NOTE: When filling warm tires, the tire pressure may need to be increased up to an additional 4 psi (30 kPa) above the recommended cold placard pressure in order to turn the Tire Pressure Monitoring Telltale Light off.
The vehicle may need to be driven for up to 20 minutes above 15 mph (24 km/h) in order for the TPMS to receive this information.

Service TPMS Warning

When a system fault is detected, the "Tire Pressure Monitoring Telltale Light" will flash on and off for 75 seconds and then remain on solid. The system fault will also sound a chime. In addition, the instrument cluster will display a "SERVICE TPM SYSTEM" message for a minimum of five seconds and then display dashes (- -) in place of the pressure value to indicate which sensor is not being received.

If the ignition switch is cycled, this sequence will repeat, providing the system fault still exists. If the system fault no longer exists, the "Tire Pressure Monitoring Telltale Light" will no longer flash, and the "SERVICE TPM SYSTEM" message will no longer display, and a pressure value will display in place of the dashes. A system fault can occur due to any of the following:

- Jamming due to electronic devices or driving next to facilities emitting the same radio frequencies as the TPMS sensors.
- Installing some form of aftermarket window tinting that affects radio wave signals.
- Lots of snow or ice around the wheels or wheel housings.
- Using tire chains on the vehicle.
- Using wheels/tires not equipped with TPMS sensors.

NOTE:

- The compact spare tire does not have a tire pressure monitoring sensor. Therefore, the TPMS will not monitor the pressure in the compact spare tire.
- If you install the compact spare tire in place of a road tire that has a pressure below the low-pressure warning limit, upon the next ignition switch cycle, the "Tire Pressure Monitoring Telltale Light" will remain on and a chime will sound. In addition, the graphic in the instrument cluster will still display a pressure value in a different color and an "Inflate to XX" message.
- After driving the vehicle for up to 20 minutes above 15 mph (24 km/h), the "Tire Pressure Monitoring Telltale Light" will flash on and off for 75 seconds and then remain on solid. In addition, the instrument cluster will display a "SERVICE TPM SYSTEM" message for a minimum of five seconds and then display dashes (- -) in place of the pressure value.

- For each subsequent ignition switch cycle, a chime will sound, the "Tire Pressure Monitoring Telltale Light" will flash on and off for 75 seconds and then remain on solid, and the instrument cluster will display a "SERVICE TPM SYSTEM" message for a minimum of five seconds and then display dashes (- -) in place of the pressure value.
- Once you repair or replace the original road tire and reinstall it on the vehicle in place of the compact spare, the TPMS will update automatically. In addition, the "Tire Pressure Monitoring Telltale Light" will turn off and the graphic in the instrument cluster will display a new pressure value instead of dashes (- -), as long as no tire pressure is below the low-pressure warning limit in any of the four active road tires. The vehicle may need to be driven for up to 20 minutes above 15 mph (24 km/h) in order for the TPMS to receive this information.

TPMS Deactivation — If Equipped

The TPMS can be deactivated if replacing all four wheel and tire assemblies (road tires) with wheel and tire assemblies that do not have TPMS Sensors, such as when installing winter wheel and tire assemblies on your vehicle.

To deactivate the TPMS, first replace all four wheel and tire assemblies (road tires) with tires not equipped with Tire Pressure Monitoring (TPM) Sensors. Then, drive the vehicle for 20 minutes above 15 mph (24 km/h). The TPMS will chime, the "TPM Telltale Light" will flash on and off for 75 seconds and then remain on. The instrument cluster will display the "Service Tire Pressure System" message and then display dashes (--) in place of the pressure values.

Beginning with the next ignition cycle, the TPMS will no longer chime or display the "Service Tire Pressure System" message in the instrument cluster but dashes (--) will remain in place of the pressure values.

To reactivate the TPMS, replace all four wheel and tire assemblies (road tires) with tires equipped with TPM sensors. Then, drive the vehicle for up to 20 minutes above 15 mph (24 km/h). The TPMS will chime, the "TPM Telltale Light" will flash on and off for 75 seconds and then turn off. The instrument cluster will display the "Service Tire Pressure System" message and then display pressure values in place of the dashes. On the next ignition cycle the "Service Tire Pressure System" message will no longer be displayed as long as no system fault exists.

General Information

The following regulatory statement applies to all radio frequency (RF) devices equipped in this vehicle:

This device complies with Part 15 of the FCC Rules and with Industry Canada license-exempt RSS standard(s). Operation is subject to the following two conditions:

(1) This device may not cause harmful interference, and

(2) This device must accept any interference received, including interference that may cause undesired operation.

NOTE: Changes or modifications not expressly approved by the party responsible for compliance could void the user's authority to operate the equipment.

OCCUPANT RESTRAINT SYSTEMS

Some of the most important safety features in your vehicle are the restraint systems:

Occupant Restraint Systems Features

- Seat Belt Systems
- Supplemental Restraint Systems (SRS) Air Bags
- Supplemental Active Head Restraints
- Child Restraints

Some of the safety features described in this section may be standard equipment on some models, or may be optional equipment on others. If you are not sure, ask your authorized dealer.

Important Safety Precautions

Please pay close attention to the information in this section. It tells you how to use your restraint system properly, to keep you and your passengers as safe as possible.

Here are some simple steps you can take to minimize the risk of harm from a deploying air bag:

1. Children 12 years old and under should always ride buckled up in a vehicle with a rear seat.
2. If a child from 2 to 12 years old (not in a rear-facing child restraint) must ride in the front passenger seat, move the seat as far back as possible and use the proper child restraint (refer to "Child Restraints" in this section for further information).
3. Children that are not big enough to wear the vehicle seat belt properly (refer to "Child Restraints" in this section for further information) should be secured in a vehicle with a rear seat in child restraints or belt-positioning booster seats. Older children who do not use child

restraints or belt-positioning booster seats should ride properly buckled up in a vehicle with a rear seat.

4. Never allow children to slide the shoulder belt behind them or under their arm.
5. You should read the instructions provided with your child restraint to make sure that you are using it properly.
6. All occupants should always wear their lap and shoulder belts properly.
7. The driver and front passenger seats should be moved back as far as practical to allow the front air bags room to inflate.
8. Do not lean against the door or window. If your vehicle has side air bags, and deployment occurs, the side air bags will inflate forcefully into the space between occupants and the door and occupants could be injured.
9. If the air bag system in this vehicle needs to be modified to accommodate a disabled person, refer to the "Customer Assistance" section for customer service contact information.

WARNING!

- **Never place a rear-facing child restraint in front of an air bag. A deploying passenger front air bag can cause death or serious injury to a child 12 years or younger, including a child in a rear-facing child restraint.**
- **Only use a rear-facing child restraint in a vehicle with a rear seat.**

Seat Belt Systems

Buckle up even though you are an excellent driver, even on short trips. Someone on the road may be a poor driver and could cause a collision that includes you. This can happen far away from home or on your own street.

Research has shown that seat belts save lives, and they can reduce the seriousness of injuries in a collision. Some of the worst injuries happen when people are thrown from the vehicle. Seat belts reduce the possibility of ejection and the risk of injury caused by striking the inside of the vehicle. Everyone in a motor vehicle should be belted at all times.

Enhanced Seat Belt Use Reminder System (BeltAlert)

Driver and Passenger BeltAlert (if equipped)

BeltAlert is a feature intended to remind the driver and outboard front seat passenger (if equipped with outboard front passenger seat BeltAlert) to buckle their seat belts. The Belt Alert feature is active whenever the ignition switch is in the START or ON/RUN position.

Initial Indication

If the driver is unbuckled when the ignition switch is first in the START or ON/RUN position, a chime will signal for a few seconds. If the driver or outboard front seat passenger (if equipped with outboard front passenger seat BeltAlert) is unbuckled when the ignition switch is first in the START or ON/RUN position the Seat Belt Reminder Light will turn on and remain on until both outboard front seat belts are buckled. The outboard front passenger seat BeltAlert is not active when an outboard front passenger seat is unoccupied.

BeltAlert Warning Sequence

The BeltAlert warning sequence is activated when the vehicle is moving above a specified vehicle speed range and the driver or outboard front seat passenger is unbuckled (if equipped with outboard front passenger seat BeltAlert) (the outboard front passenger seat BeltAlert is not active when the outboard front passenger seat is unoccupied). The BeltAlert warning sequence starts by blinking the Seat Belt Reminder Light and sounding an intermittent chime. Once the BeltAlert warning sequence has completed, the Seat Belt Reminder Light will remain on until the seat belts are buckled. The BeltAlert warning sequence may repeat based on vehicle speed until the driver and occupied outboard front seat passenger seat belts are buckled. The driver should instruct all occupants to buckle their seat belts.

Change of Status

If the driver or outboard front seat passenger (if equipped with outboard front passenger seat BeltAlert) unbuckles their seat belt while the vehicle is traveling, the BeltAlert warning sequence will begin until the seat belts are buckled again.

The outboard front passenger seat BeltAlert is not active when the outboard front passenger seat is unoccupied. BeltAlert may be triggered when an animal or other items are placed on the outboard front passenger seat or when the seat is folded flat (if equipped). It is recommended that pets be restrained in the rear seat (if equipped) in pet harnesses or pet carriers that are secured by seat belts, and cargo is properly stowed.

BeltAlert can be activated or deactivated by your authorized dealer. FCA US LLC does not recommend deactivating BeltAlert.

NOTE: If BeltAlert has been deactivated and the driver or outboard front seat passenger (if equipped with outboard front passenger seat BeltAlert) is unbuckled the Seat Belt Reminder Light will turn on and remain on until the driver and outboard front seat passenger seat belts are buckled.

Lap/Shoulder Belts

All seating positions in your vehicle are equipped with lap/shoulder belts.

The seat belt webbing retractor will lock only during very sudden stops or collisions. This feature allows the shoulder part of the seat belt to move freely with you under normal conditions. However, in a collision the seat belt will lock and reduce your risk of striking the inside of the vehicle or being thrown out of the vehicle.

WARNING!

- **Relying on the air bags alone could lead to more severe injuries in a collision. The air bags work with your seat belt to restrain you properly. In some collisions, the air bags won't deploy at all. Always wear your seat belt even though you have air bags.**
- **In a collision, you and your passengers can suffer much greater injuries if you are not properly buckled up. You can strike the interior of your vehicle or other passengers, or you can be thrown out of the vehicle. Always be sure you and others in your vehicle are buckled up properly.**

(Continued)

WARNING! *(Continued)*

- It is dangerous to ride in a cargo area, inside or outside of a vehicle. In a collision, people riding in these areas are more likely to be seriously injured or killed.
- Do not allow people to ride in any area of your vehicle that is not equipped with seats and seat belts.
- Be sure everyone in your vehicle is in a seat and using a seat belt properly. Occupants, including the driver, should always wear their seat belts whether or not an air bag is also provided at their seating position to minimize the risk of severe injury or death in the event of a crash.
- Wearing your seat belt incorrectly could make your injuries in a collision much worse. You might suffer internal injuries, or you could even slide out of the seat belt. Follow these instructions to wear your seat belt safely and to keep your passengers safe, too.
- Two people should never be belted into a single seat belt. People belted together can crash into one another in a collision, hurting one another badly. Never use a lap/shoulder belt or a lap belt for more than one person, no matter what their size.

WARNING!

- A lap belt worn too high can increase the risk of injury in a collision. The seat belt forces won't be at the strong hip and pelvic bones, but across your abdomen. Always wear the lap part of your seat belt as low as possible and keep it snug.
- A twisted seat belt may not protect you properly. In a collision, it could even cut into you. Be sure the seat belt is flat against your body, without twists. If you can't straighten a seat belt in your vehicle, take it to your authorized dealer immediately and have it fixed.
- A seat belt that is buckled into the wrong buckle will not protect you properly. The lap portion could ride too high on your body, possibly causing internal injuries. Always buckle your seat belt into the buckle nearest you.
- A seat belt that is too loose will not protect you properly. In a sudden stop, you could move too far forward, increasing the possibility of injury. Wear your seat belt snugly.
- A seat belt that is worn under your arm is dangerous. Your body could strike the inside surfaces of the

(Continued)

WARNING! ***(Continued)***

vehicle in a collision, increasing head and neck injury. A seat belt worn under the arm can cause internal injuries. Ribs aren't as strong as shoulder bones. Wear the seat belt over your shoulder so that your strongest bones will take the force in a collision.

- **A shoulder belt placed behind you will not protect you from injury during a collision. You are more likely to hit your head in a collision if you do not wear your shoulder belt. The lap and shoulder belt are meant to be used together.**
- **A frayed or torn seat belt could rip apart in a collision and leave you with no protection. Inspect the seat belt system periodically, checking for cuts, frays, or loose parts. Damaged parts must be replaced immediately. Do not disassemble or modify the seat belt system. Seat belt assemblies must be replaced after a collision.**

Lap/Shoulder Belt Operating Instructions

1. Enter the vehicle and close the door. Sit back and adjust the seat.
2. The seat belt latch plate is above the back of the front seat, and next to your arm in the rear seat (for vehicles equipped with a rear seat). Grasp the latch plate and pull out the seat belt. Slide the latch plate up the webbing as far as necessary to allow the seat belt to go around your lap.

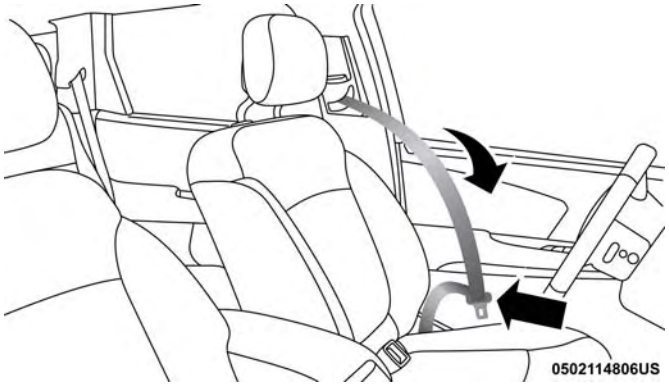

Pulling Out The Latch Plate

3. When the seat belt is long enough to fit, insert the latch plate into the buckle until you hear a "click."

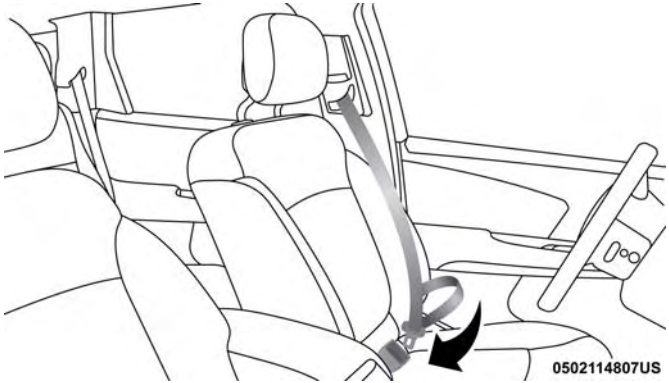

Inserting Latch Plate Into Buckle

4. Position the lap belt so that it is snug and lies low across your hips, below your abdomen. To remove slack in the lap belt portion, pull up on the shoulder belt. To loosen the lap belt if it is too tight, tilt the latch plate and pull on the lap belt. A snug seat belt reduces the risk of sliding under the seat belt in a collision.

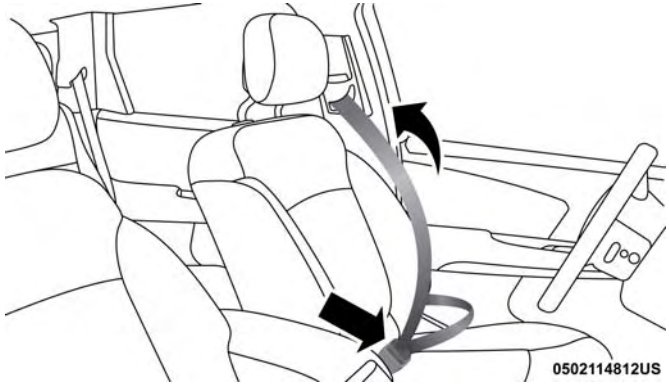

Positioning The Lap Belt

5. Position the shoulder belt across the shoulder and chest with minimal, if any slack so that it is comfortable and not resting on your neck. The retractor will withdraw any slack in the shoulder belt.

6. To release the seat belt, push the red button on the buckle. The seat belt will automatically retract to its stowed position. If necessary, slide the latch plate down the webbing to allow the seat belt to retract fully.

Lap/Shoulder Belt Untwisting Procedure

Use the following procedure to untwist a twisted lap/shoulder belt.

1. Position the latch plate as close as possible to the anchor point.
2. At about 6 to 12 inches (15 to 30 cm) above the latch plate, grasp and twist the seat belt webbing 180 degrees to create a fold that begins immediately above the latch plate.
3. Slide the latch plate upward over the folded webbing. The folded webbing must enter the slot at the top of the latch plate.
4. Continue to slide the latch plate up until it clears the folded webbing and the seat belt is no longer twisted.

Adjustable Upper Shoulder Belt Anchorage

In the driver and front passenger seats, the top of the shoulder belt can be adjusted upward or downward to position the seat belt away from your neck. Push or squeeze the anchorage button to release the anchorage, and move it up or down to the position that serves you best.

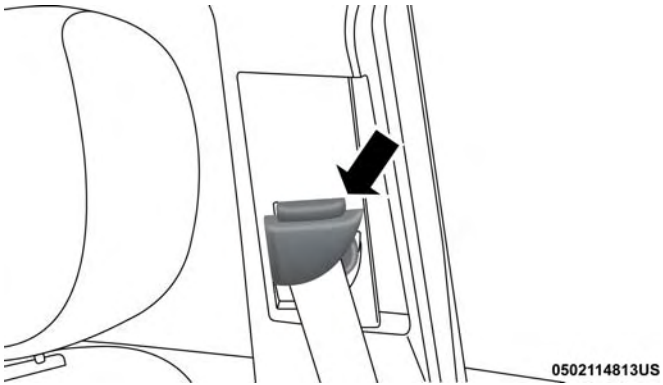

Adjustable Upper Anchorage

As a guide, if you are shorter than average, you will prefer the shoulder belt anchorage in a lower position, and if you are taller than average, you will prefer the shoulder belt anchorage in a higher position. After you release the anchorage button, try to move it up or down to make sure that it is locked in position.

NOTE: The adjustable upper shoulder belt anchorage is equipped with an Easy Up feature. This feature allows the shoulder belt anchorage to be adjusted in the upward position without pushing or squeezing the release button. To verify the shoulder belt anchorage is latched, pull downward on the shoulder belt anchorage until it is locked into position.

WARNING!

- **Wearing your seat belt incorrectly could make your injuries in a collision much worse. You might suffer internal injuries, or you could even slide out of the**

(Continued)

WARNING! *(Continued)*

seat belt. Follow these instructions to wear your seat belt safely and to keep your passengers safe, too.
- **Position the shoulder belt across the shoulder and chest with minimal, if any slack so that it is comfortable and not resting on your neck. The retractor will withdraw any slack in the shoulder belt.**
- **Misadjustment of the seat belt could reduce the effectiveness of the safety belt in a crash.**

Seat Belt Extender

If a seat belt is not long enough to fit properly, even when the webbing is fully extended and the adjustable upper shoulder belt anchorage (if equipped) is in its lowest position, your authorized dealer can provide you with a Seat Belt Extender. The Seat Belt Extender should be used only if the existing seat belt is not long enough. When the Seat Belt Extender is not required for a different occupant, it must be removed.

WARNING!

- **ONLY use a Seat Belt Extender if it is physically required in order to properly fit the original seat belt system. DO NOT USE the Seat Belt Extender if, when worn, the distance between the front edge of the Seat Belt Extender buckle and the center of the occupant's body is LESS than 6 inches.**
- **Using a Seat Belt Extender when not needed can increase the risk of serious injury or death in a collision. Only use the Seat Belt Extender when the lap belt is not long enough and only use in the recommended seating positions. Remove and store the Seat Belt Extender when not needed.**

Seat Belts And Pregnant Women

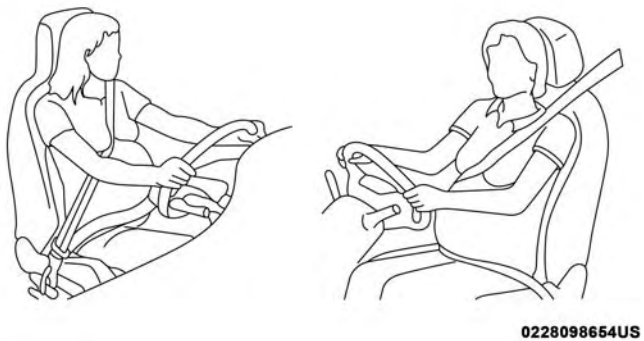

Pregnant Women And Seat Belts

Seat belts must be worn by all occupants including pregnant women: the risk of injury in the event of an accident is reduced for the mother and the unborn child if they are wearing a seat belt.

Position the lap belt snug and low below the abdomen and across the strong bones of the hips. Place the shoulder belt across the chest and away from the neck. Never place the shoulder belt behind the back or under the arm.

Seat Belt Pretensioner

The front seat belt system is equipped with pretensioning devices that are designed to remove slack from the seat belt in the event of a collision. These devices may improve the performance of the seat belt by removing slack from the seat belt early in a collision. Pretensioners work for all size occupants, including those in child restraints.

NOTE: These devices are not a substitute for proper seat belt placement by the occupant. The seat belt still must be worn snugly and positioned properly.

The pretensioners are triggered by the Occupant Restraint Controller (ORC). Like the air bags, the pretensioners are single use items. A deployed pretensioner or a deployed air bag must be replaced immediately.

Energy Management Feature — If Equipped

The front seat belt system is equipped and the second row outboard seat belt system may be equipped with an Energy Management feature that may help further reduce the risk of injury in the event of a collision. The seat belt system has a retractor assembly that is designed to release webbing in a controlled manner.

Switchable Automatic Locking Retractors (ALR)

The seat belts in the passenger seating positions are equipped with a Switchable Automatic Locking Retractor (ALR) which is used to secure a child restraint system. For additional information, refer to "Installing Child Restraints Using The Vehicle Seat Belt" under the "Child Restraints" section of this manual. The figure below illustrates the locking feature for each seating position.

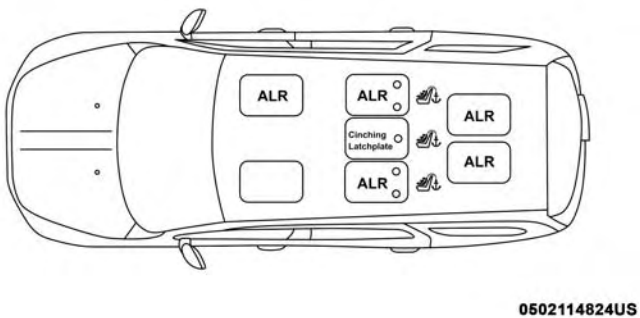

ALR — Switchable Automatic Locking Retractor (Third Row Shown — If Equipped)

If the passenger seating position is equipped with an ALR and is being used for normal usage, only pull the seat belt webbing out far enough to comfortably wrap around the occupant's mid-section so as to not activate the ALR. If the ALR is activated, you will hear a clicking sound as the seat belt retracts. Allow the webbing to retract completely in this case and then carefully pull out only the amount of webbing necessary to comfortably wrap around the occupant's mid-section. Slide the latch plate into the buckle until you hear a "click."

In Automatic Locking Mode, the shoulder belt is automatically pre-locked. The seat belt will still retract to remove any slack in the shoulder belt. Use the Automatic Locking Mode anytime a child restraint is installed in a seating position that has a seat belt with this feature. Children 12 years old and under should always be properly restrained in a vehicle with a rear seat.

WARNING!

- **Never place a rear-facing child restraint in front of an air bag. A deploying passenger front air bag can cause death or serious injury to a child 12 years or younger, including a child in a rear-facing child restraint.**
- **Only use a rear-facing child restraint in a vehicle with a rear seat.**

How To Engage The Automatic Locking Mode

1. Buckle the combination lap and shoulder belt.
2. Grasp the shoulder portion and pull downward until the entire seat belt is extracted.
3. Allow the seat belt to retract. As the seat belt retracts, you will hear a clicking sound. This indicates the seat belt is now in the Automatic Locking Mode.

How To Disengage The Automatic Locking Mode

Unbuckle the combination lap/shoulder belt and allow it to retract completely to disengage the Automatic Locking Mode and activate the vehicle sensitive (emergency) locking mode.

WARNING!

- **The seat belt assembly must be replaced if the switchable Automatic Locking Retractor (ALR) feature or any other seat belt function is not working properly when checked according to the procedures in the Service Manual.**
- **Failure to replace the seat belt assembly could increase the risk of injury in collisions.**
- **Do not use the Automatic Locking Mode to restrain occupants who are wearing the seat belt or children who are using booster seats. The locked mode is only used to install rear-facing or forward-facing child restraints that have a harness for restraining the child.**

Supplemental Active Head Restraints (AHR)

These head restraints are passive, deployable components, and vehicles with this equipment cannot be readily identified by any markings, only through visual inspection of the head restraint. The head restraint will be split in two halves, with the front half being soft foam and trim, the back half being decorative plastic.

How The Active Head Restraints (AHR) Work

The Occupant Restraint Controller (ORC) determines whether the severity or type of rear impact will require the Active Head Restraints (AHR) to deploy. If a rear impact requires deployment, both the driver and front passenger seat AHRs will be deployed.

When AHRs deploy during a rear impact, the front half of the head restraint extends forward to minimize the gap between the back of the occupant's head and the AHR. This system is designed to help prevent or reduce the extent of injuries to the driver and front passenger in certain types of rear impacts.

NOTE: The Active Head Restraints (AHR) may or may not deploy in the event of a front or side impact. However, if during a front impact, a secondary rear impact occurs, the AHR may deploy based on the severity and type of the impact.

Active Head Restraint (AHR) Components:

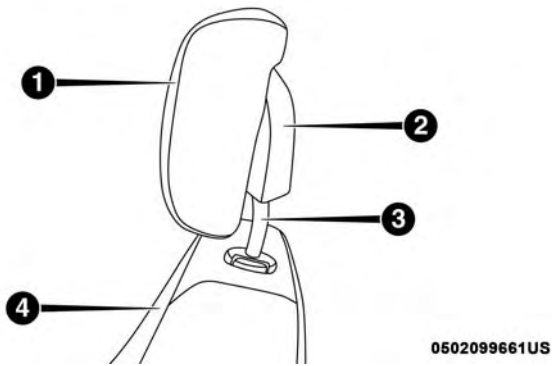

Active Head Restraint (AHR) Components

1 — Head Restraint Front Half (Soft Foam And Trim)
2 — Head Restraint Back Half (Decorative Plastic Rear Cover)
3 — Head Restraint Guide Tubes
4 — Seat Back

WARNING!

- **All occupants, including the driver, should not operate a vehicle or sit in a vehicle's seat until the head restraints are placed in their proper positions in order to minimize the risk of neck injury in the event of a collision.**
- **Do not place items over the top of the Active Head Restraint, such as coats, seat covers or portable DVD players. These items may interfere with the operation of the Active Head Restraint in the event of a collision and could result in serious injury or death.**
- **Active Head Restraints may be deployed if they are struck by an object such as a hand, foot or loose cargo. To avoid accidental deployment of the Active Head Restraint, ensure that all cargo is secured, as loose cargo could contact the Active Head Restraint during sudden stops. Failure to follow this warning could cause personal injury if the Active Head Restraint is deployed.**

NOTE: For more information on properly adjusting and positioning the head restraint, refer to "Head Restraints" in "Getting To Know Your Vehicle."

Resetting Active Head Restraints (AHR)

Active Head Restraint (AHR) Deployed

If the Active Head Restraints are triggered during a collision, the front half of the head restraint will be extended forward and separated from the rear half of the head restraint (See Image). Do not drive your vehicle after the AHRs have deployed. The head restraint must be reset into the original position to best protect the occupant for all types of collisions. An authorized FCA US LLC dealer must reset the AHRs on the driver's and front passenger's seat before driving. Personally attempting to reset the AHRs may result in damage to the AHRs that could impair their function.

WARNING!

Deployed AHRs are not able to best protect you in all types of collisions. Have deployed AHRs reset by an authorized dealer immediately.

Supplemental Restraint Systems (SRS)

Some of the safety features described in this section may be standard equipment on some models, or may be optional equipment on others. If you are not sure, ask your authorized dealer.

The air bag system must be ready to protect you in a collision. The Occupant Restraint Controller (ORC) monitors the internal circuits and interconnecting wiring associated with the electrical Air Bag System Components. Your vehicle may be equipped with the following Air Bag System Components:

Air Bag System Components

- Occupant Restraint Controller (ORC)
- Air Bag Warning Light

- Steering Wheel and Column
- Instrument Panel
- Knee Impact Bolsters
- Driver and Front Passenger Air Bags
- Seat Belt Buckle Switch
- Supplemental Side Air Bags
- Supplemental Knee Air Bags
- Front and Side Impact Sensors
- Seat Belt Pretensioners
- Seat Track Position Sensors

Air Bag Warning Light

The ORC monitors the readiness of the electronic parts of the air bag system whenever the ignition switch is in the START or ON/RUN position. If the ignition switch is in the OFF position or in the ACC position, the air bag system is not on and the air bags will not inflate.

The ORC contains a backup power supply system that may deploy the air bag system even if the battery loses power or it becomes disconnected prior to deployment.

The ORC turns on the Air Bag Warning Light in the instrument panel for approximately four to eight seconds for a self-check when the ignition switch is first in the ON/RUN position. After the self-check, the Air Bag Warning Light will turn off. If the ORC detects a malfunction in any part of the system, it turns on the Air Bag Warning Light, either momentarily or continuously. A single chime will sound to alert you if the light comes on again after initial startup.

The ORC also includes diagnostics that will illuminate the instrument panel Air Bag Warning Light if a malfunction is detected that could affect the air bag system. The diagnostics also record the nature of the malfunction. While the air bag system is designed to be maintenance free, if any of the following occurs, have an authorized dealer service the air bag system immediately.

- The Air Bag Warning Light does not come on during the four to eight seconds when the ignition switch is first in the ON/RUN position.
- The Air Bag Warning Light remains on after the four to eight-second interval.
- The Air Bag Warning Light comes on intermittently or remains on while driving.

NOTE: If the speedometer, tachometer, or any engine related gauges are not working, the Occupant Restraint Controller (ORC) may also be disabled. In this condition the air bags may not be ready to inflate for your protection. Have an authorized dealer service the air bag system immediately.

WARNING!

Ignoring the Air Bag Warning Light in your instrument panel could mean you won't have the air bag system to protect you in a collision. If the light does not come on as a bulb check when the ignition is first turned on, stays on after you start the vehicle, or if it comes on as you drive, have an authorized dealer service the air bag system immediately.

Front Air Bags

This vehicle has front air bags and lap/shoulder belts for both the driver and front passenger. The front air bags are a supplement to the seat belt restraint systems. The driver front air bag is mounted in the center of the steering wheel. The passenger front air bag is mounted in the instrument panel, above the glove compartment. The words "SRS AIRBAG" or "AIRBAG" are embossed on the air bag covers.

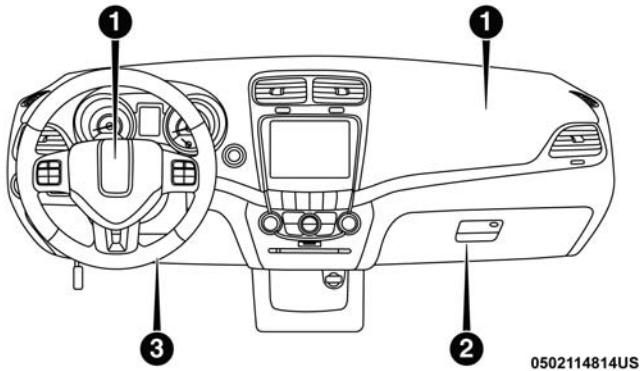

Front Air Bag/Knee Bolster Locations

1 — Driver And Passenger Front Air Bags
2 — Passenger Knee Impact Bolster
3 — Driver Knee Impact Bolster/Supplemental Driver Knee Air Bag

WARNING!

- **Being too close to the steering wheel or instrument panel during front air bag deployment could cause serious injury, including death. Air bags need room to inflate. Sit back, comfortably extending your arms to reach the steering wheel or instrument panel.**
- **Never place a rear-facing child restraint in front of an air bag. A deploying passenger front air bag can cause death or serious injury to a child 12 years or younger, including a child in a rear-facing child restraint.**
- **Only use a rear-facing child restraint in a vehicle with a rear seat.**

Driver And Passenger Front Air Bag Features

The Advanced Front Air Bag system has multistage driver and front passenger air bags. This system provides output appropriate to the severity and type of collision as determined by the Occupant Restraint Controller (ORC), which may receive information from the front impact sensors (if equipped) or other system components.

The first stage inflator is triggered immediately during an impact that requires air bag deployment. A low energy output is used in less severe collisions. A higher energy output is used for more severe collisions.

This vehicle may be equipped with a driver and/or front passenger seat belt buckle switch that detects whether the driver or front passenger seat belt is buckled. The seat belt buckle switch may adjust the inflation rate of the Advanced Front Air Bags.

This vehicle may be equipped with driver and/or front passenger seat track position sensors that may adjust the inflation rate of the Advanced Front Air Bags based upon seat position.

WARNING!

- **No objects should be placed over or near the air bag on the instrument panel or steering wheel because any such objects could cause harm if the vehicle is in a collision severe enough to cause the air bag to inflate.**
- **Do not put anything on or around the air bag covers or attempt to open them manually. You may damage**

(Continued)

WARNING! ***(Continued)***

the air bags and you could be injured because the air bags may no longer be functional. The protective covers for the air bag cushions are designed to open only when the air bags are inflating.

- **Relying on the air bags alone could lead to more severe injuries in a collision. The air bags work with your seat belt to restrain you properly. In some collisions, air bags won't deploy at all. Always wear your seat belts even though you have air bags.**

Front Air Bag Operation

Front Air Bags are designed to provide additional protection by supplementing the seat belts. Front air bags are not expected to reduce the risk of injury in rear, side, or rollover collisions. The front air bags will not deploy in all frontal collisions, including some that may produce substantial vehicle damage — for example, some pole collisions, truck underrides, and angle offset collisions.

On the other hand, depending on the type and location of impact, front air bags may deploy in crashes with little vehicle front-end damage but that produce a severe initial deceleration.

Because air bag sensors measure vehicle deceleration over time, vehicle speed and damage by themselves are not good indicators of whether or not an air bag should have deployed.

Seat belts are necessary for your protection in all collisions, and also are needed to help keep you in position, away from an inflating air bag.

When the ORC detects a collision requiring the front air bags, it signals the inflator units. A large quantity of non-toxic gas is generated to inflate the front air bags.

The steering wheel hub trim cover and the upper right side of the instrument panel separate and fold out of the way as the air bags inflate to their full size. The front air bags fully inflate in less time than it takes to blink your eyes. The front air bags then quickly deflate while helping to restrain the driver and front passenger.

Knee Impact Bolsters

The Knee Impact Bolsters help protect the knees of the driver and front passenger, and position the front occupants for improved interaction with the front air bags.

WARNING!

- **Do not drill, cut, or tamper with the knee impact bolsters in any way.**
- **Do not mount any accessories to the knee impact bolsters such as alarm lights, stereos, citizen band radios, etc.**

Supplemental Driver Knee Air Bag

This vehicle is equipped with a Supplemental Driver Knee Air Bag mounted in the instrument panel below the steering column. The Supplemental Driver Knee Air Bag provides enhanced protection during a frontal impact by working together with the seat belts, pretensioners, and front air bags.

Supplemental Side Air Bags

Supplemental Seat-Mounted Side Air Bags (SABs)

This vehicle is equipped with Supplemental Seat-Mounted Side Air Bags (SABs).

Supplemental Seat-Mounted Side Air Bags (SABs) are located in the outboard side of the front seats. The SABs are marked with a “SRS AIRBAG” or “AIRBAG” label sewn into the outboard side of the seats.

The SABs may help to reduce the risk of occupant injury during certain side impacts, in addition to the injury reduction potential provided by the seat belts and body structure.

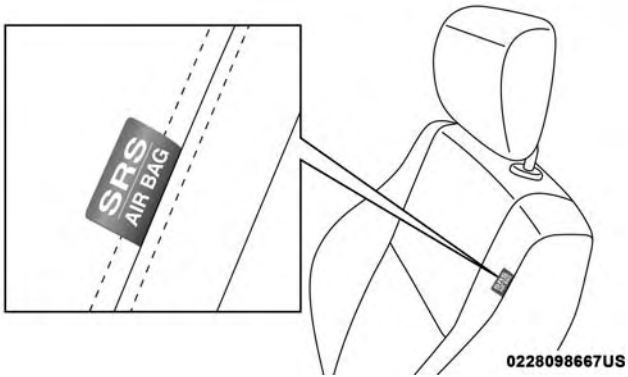

Front Supplemental Seat-Mounted Side Air Bag Label

When the SAB deploys, it opens the seam on the outboard side of the seatback's trim cover. The inflating SAB deploys through the seat seam into the space between the occupant and the door. The SAB moves at a very high speed and with such a high force that it could injure occupants if they are not seated properly, or if items are positioned in the area where the SAB inflates. Children are at an even greater risk of injury from a deploying air bag.

WARNING!

Do not use accessory seat covers or place objects between you and the Side Air Bags; the performance could be adversely affected and/or objects could be pushed into you, causing serious injury.

Supplemental Side Air Bag Inflatable Curtains (SABICs)

This vehicle is equipped with Supplemental Side Air Bag Inflatable Curtains (SABICs).

Supplemental Side Air Bag Inflatable Curtains (SABICs) are located above the side windows. The trim covering the SABICs is labeled "SRS AIRBAG" or "AIRBAG."

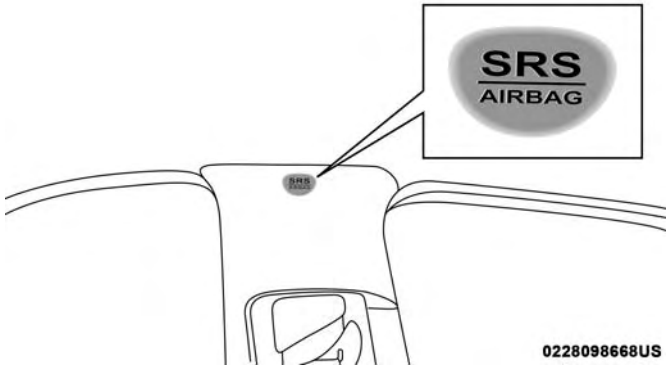

Supplemental Side Air Bag Inflatable Curtain (SABIC) Label Location

SABICs may help reduce the risk of head and other injuries to front and rear seat outboard occupants in certain side impacts, in addition to the injury reduction potential provided by the seat belts and body structure.

The SABIC deploys downward, covering the side windows. An inflating SABIC pushes the outside edge of the headliner out of the way and covers the window. The SABICs inflate with enough force to injure occupants if they are not belted and seated properly, or if items are

positioned in the area where the SABICs inflate. Children are at an even greater risk of injury from a deploying air bag.

The SABICs may help reduce the risk of partial or complete ejection of vehicle occupants through side windows in certain side impact events.

WARNING!

- **Do not mount equipment, or stack luggage or other cargo up high enough to block the deployment of the SABICs. The trim covering above the side windows where the SABIC and its deployment path are located should remain free from any obstructions.**
- **In order for the SABICs to work as intended, do not install any accessory items in your vehicle which could alter the roof. Do not add an aftermarket sunroof to your vehicle. Do not add roof racks that require permanent attachments (bolts or screws) for installation on the vehicle roof. Do not drill into the roof of the vehicle for any reason.**

Side Impacts

The Side Air Bags are designed to activate in certain side impacts. The Occupant Restraint Controller (ORC) determines whether the deployment of the Side Air Bags in a particular impact event is appropriate, based on the severity and type of collision. The side impact sensors aid the ORC in determining the appropriate response to impact events. The system is calibrated to deploy the Side Air Bags on the impact side of the vehicle during impacts that require Side Air Bag occupant protection. In side impacts, the Side Air Bags deploy independently; a left side impact deploys the left Side Air Bags only and a right-side impact deploys the right Side Air Bags only. Vehicle damage by itself is not a good indicator of whether or not Side Air Bags should have deployed.

The Side Air Bags will not deploy in all side collisions, including some collisions at certain angles, or some side collisions that do not impact the area of the passenger compartment. The Side Air Bags may deploy during angled or offset frontal collisions where the front air bags deploy.

Side Air Bags are a supplement to the seat belt restraint system. Side Air Bags deploy in less time than it takes to blink your eyes.

WARNING!

- **Occupants, including children, who are up against or very close to Side Air Bags can be seriously injured or killed. Occupants, including children, should never lean on or sleep against the door, side windows, or area where the side air bags inflate, even if they are in an infant or child restraint.**
- **Seat belts (and child restraints where appropriate) are necessary for your protection in all collisions. They also help keep you in position, away from an inflating Side Air Bag. To get the best protection from the Side Air Bags, occupants must wear their seat belts properly and sit upright with their backs against the seats. Children must be properly restrained in a child restraint or booster seat that is appropriate for the size of the child.**

WARNING!

- **Side Air Bags need room to inflate. Do not lean against the door or window. Sit upright in the center of the seat.**
- **Being too close to the Side Air Bags during deployment could cause you to be severely injured or killed.**
- **Relying on the Side Air Bags alone could lead to more severe injuries in a collision. The Side Air Bags work with your seat belt to restrain you properly. In some collisions, Side Air Bags won't deploy at all. Always wear your seat belt even though you have Side Air Bags.**

NOTE: Air bag covers may not be obvious in the interior trim, but they will open during air bag deployment.

Rollover Events

Side Air Bags are designed to activate in certain rollover events. The ORC determines whether the deployment of the Side Air Bags in a particular rollover event is appropriate, based on the severity and type of collision. Vehicle damage by itself is not a good indicator of whether or not Side Air Bags should have deployed.

The Side Air Bags will not deploy in all rollover events. The rollover sensing system determines if a rollover event may be in progress and whether deployment is appropriate. In the event the vehicle experiences a rollover or near rollover event, and deployment of the Side Air Bags is appropriate, the rollover sensing system will also deploy the seat belt pretensioners on both sides of the vehicle.

The SABICs may help reduce the risk of partial or complete ejection of vehicle occupants through side windows in certain rollover or side impact events.

Air Bag System Components

NOTE: The Occupant Restraint Controller (ORC) monitors the internal circuits and interconnecting wiring associated with electrical Air Bag System Components listed below:

- Occupant Restraint Controller (ORC)
- Air Bag Warning Light
- Steering Wheel and Column
- Instrument Panel
- Knee Impact Bolsters
- Driver and Front Passenger Air Bags
- Seat Belt Buckle Switch
- Supplemental Side Air Bags
- Supplemental Knee Air Bags
- Front and Side Impact Sensors
- Seat Belt Pretensioners
- Seat Track Position Sensors

If A Deployment Occurs

The front air bags are designed to deflate immediately after deployment.

NOTE: Front and/or side air bags will not deploy in all collisions. This does not mean something is wrong with the air bag system.

If you do have a collision which deploys the air bags, any or all of the following may occur:

- The air bag material may sometimes cause abrasions and/or skin reddening to the occupants as the air bags deploy and unfold. The abrasions are similar to friction rope burns or those you might get sliding along a carpet or gymnasium floor. They are not caused by contact with chemicals. They are not permanent and normally heal quickly. However, if you haven't healed significantly within a few days, or if you have any blistering, see your doctor immediately.

- As the air bags deflate, you may see some smoke-like particles. The particles are a normal by-product of the process that generates the non-toxic gas used for air bag inflation. These airborne particles may irritate the skin, eyes, nose, or throat. If you have skin or eye irritation, rinse the area with cool water. For nose or throat irritation, move to fresh air. If the irritation continues, see your doctor. If these particles settle on your clothing, follow the garment manufacturer's instructions for cleaning.

Do not drive your vehicle after the air bags have deployed. If you are involved in another collision, the air bags will not be in place to protect you.

WARNING!

Deployed air bags and seat belt pretensioners cannot protect you in another collision. Have the air bags, seat belt pretensioners, and the seat belt retractor assemblies replaced by an authorized dealer immediately. Also, have the Occupant Restraint Controller System serviced as well.

NOTE:

- Air bag covers may not be obvious in the interior trim, but they will open during air bag deployment.
- After any collision, the vehicle should be taken to an authorized dealer immediately.

Enhanced Accident Response System

In the event of an impact, if the communication network remains intact, and the power remains intact, depending on the nature of the event, the ORC will determine whether to have the Enhanced Accident Response System perform the following functions:

- Cut off fuel to the engine.
- Flash hazard lights as long as the battery has power or until the hazard light button is pressed. The hazard lights can be deactivated by pressing the hazard light button.
- Turn on the interior lights, which remain on as long as the battery has power.
- Unlock the power door locks.

Enhanced Accident Response System Reset Procedure

In order to reset the Enhanced Accident Response System functions after an event, the ignition switch must be changed from ignition START or ON/RUN to ignition OFF. Carefully check the vehicle for fuel leaks in the engine compartment and on the ground near the engine compartment and fuel tank before resetting the system and starting the engine.

Maintaining Your Air Bag System

WARNING!

- **Modifications to any part of the air bag system could cause it to fail when you need it. You could be injured if the air bag system is not there to protect you. Do not modify the components or wiring, including adding any kind of badges or stickers to the steering wheel hub trim cover or the upper right side**

(Continued)

WARNING! *(Continued)*

of the instrument panel. Do not modify the front bumper, vehicle body structure, or add aftermarket side steps or running boards.

- **It is dangerous to try to repair any part of the air bag system yourself. Be sure to tell anyone who works on your vehicle that it has an air bag system.**
- **Do not attempt to modify any part of your air bag system. The air bag may inflate accidentally or may not function properly if modifications are made. Take your vehicle to an authorized dealer for any air bag system service. If your seat, including your trim cover and cushion, needs to be serviced in any way (including removal or loosening/tightening of seat attachment bolts), take the vehicle to your authorized dealer. Only manufacturer approved seat accessories may be used. If it is necessary to modify the air bag system for persons with disabilities, contact your authorized dealer.**

Event Data Recorder (EDR)

This vehicle is equipped with an event data recorder (EDR). The main purpose of an EDR is to record, in certain crash or near crash-like situations, such as an air bag deployment or hitting a road obstacle, data that will assist in understanding how a vehicle's systems performed. The EDR is designed to record data related to vehicle dynamics and safety systems for a short period of time, typically 30 seconds or less. The EDR in this vehicle is designed to record such data as:

- How various systems in your vehicle were operating;
- Whether or not the driver and passenger safety belts were buckled/fastened;
- How far (if at all) the driver was depressing the accelerator and/or brake pedal; and,
- How fast the vehicle was traveling.

These data can help provide a better understanding of the circumstances in which crashes and injuries occur.

NOTE: EDR data are recorded by your vehicle only if a non-trivial crash situation occurs; no data are recorded by the EDR under normal driving conditions and no personal data (e.g., name, gender, age, and crash location) are recorded. However, other parties, such as law enforcement, could combine the EDR data with the type of personally identifying data routinely acquired during a crash investigation.

To read data recorded by an EDR, special equipment is required, and access to the vehicle or the EDR is needed. In addition to the vehicle manufacturer, other parties, such as law enforcement, that have the special equipment, can read the information if they have access to the vehicle or the EDR.

Child Restraints

Everyone in your vehicle needs to be buckled up at all times, including babies and children. Every state in the United States, and every Canadian province, requires that small children ride in proper restraint systems. This is the law, and you can be prosecuted for ignoring it.

Children 12 years or younger should ride properly buckled up in a rear seat, if available. According to crash statistics, children are safer when properly restrained in the rear seats rather than in the front.

WARNING!

In a collision, an unrestrained child can become a projectile inside the vehicle. The force required to hold even an infant on your lap could become so great that you could not hold the child, no matter how strong you are. The child and others could be badly injured or killed. Any child riding in your vehicle should be in a proper restraint for the child's size.

There are different sizes and types of restraints for children from newborn size to the child almost large enough for an adult safety belt. Always check the child seat Owner's Manual to make sure you have the correct seat for your child. Carefully read and follow all the instructions and warnings in the child restraint Owner's Manual and on all the labels attached to the child restraint.

Before buying any restraint system, make sure that it has a label certifying that it meets all applicable Safety Standards. You should also make sure that you can install it in the vehicle where you will use it.

NOTE:

- For additional information, refer to www.safercar.gov/parents/index.htm or call: 1–888–327–4236
- Canadian residents should refer to Transport Canada's website for additional information: http://www.tc.gc.ca/eng/motorvehiclesafety/safedrivers-childsafety-index-53.htm

Summary Of Recommendations For Restraining Children In Vehicles

	Child Size, Height, Weight Or Age	Recommended Type Of Child Restraint
Infants and Toddlers	Children who are two years old or younger and who have not reached the height or weight limits of their child restraint	Either an Infant Carrier or a Convertible Child Restraint, facing rearward in the rear seat of the vehicle
Small Children	Children who are at least two years old or who have outgrown the height or weight limit of their rear-facing child restraint	Forward-Facing Child Restraint with a five-point Harness, facing forward in the rear seat of the vehicle
Larger Children	Children who have outgrown their forward-facing child restraint, but are too small to properly fit the vehicle's seat belt	Belt Positioning Booster Seat and the vehicle seat belt, seated in the rear seat of the vehicle
Children Too Large for Child Restraints	Children 12 years old or younger, who have outgrown the height or weight limit of their booster seat	Vehicle Seat Belt, seated in the rear seat of the vehicle

Infant And Child Restraints

Safety experts recommend that children ride rear-facing in the vehicle until they are two years old or until they reach either the height or weight limit of their rear-facing child restraint. Two types of child restraints can be used rear-facing: infant carriers and convertible child seats.

The infant carrier is only used rear-facing in the vehicle. It is recommended for children from birth until they reach the weight or height limit of the infant carrier. Convertible child seats can be used either rear-facing or forward-facing in the vehicle. Convertible child seats often have a higher weight limit in the rear-facing direction than infant carriers do, so they can be used rear-facing by children who have outgrown their infant carrier but are still less than at least two years old. Children should remain rear-facing until they reach the highest weight or height allowed by their convertible child seat.

WARNING!

- **Never place a rear-facing child restraint in front of an air bag. A deploying passenger front air bag can cause death or serious injury to a child 12 years or younger, including a child in a rear-facing child restraint.**
- **Only use a rear-facing child restraint in a vehicle with a rear seat.**

WARNING!

Do not install a rear-facing car seat using a rear support leg in this vehicle. The floor of this vehicle is not designed to manage the crash forces of this type of car seat. In a crash, the support leg may not function as it was designed by the car seat manufacturer, and your child may be more severely injured as a result.

Older Children And Child Restraints

Children who are two years old or who have outgrown their rear-facing convertible child seat can ride forward-facing in the vehicle. Forward-facing child seats and convertible child seats used in the forward-facing direction are for children who are over two years old or who have outgrown the rear-facing weight or height limit of their rear-facing convertible child seat. Children should remain in a forward-facing child seat with a harness for as long as possible, up to the highest weight or height allowed by the child seat.

All children whose weight or height is above the forward-facing limit for the child seat should use a belt-positioning booster seat until the vehicle's seat belts fit properly. If the child cannot sit with knees bent over the vehicle's seat cushion while the child's back is against the seatback, they should use a belt-positioning booster seat. The child and belt-positioning booster seat are held in the vehicle by the seat belt.

WARNING!

- **Improper installation can lead to failure of an infant or child restraint. It could come loose in a collision. The child could be badly injured or killed. Follow the child restraint manufacturer's directions exactly when installing an infant or child restraint.**
- **After a child restraint is installed in the vehicle, do not move the vehicle seat forward or rearward because it can loosen the child restraint attachments. Remove the child restraint before adjusting the vehicle seat position. When the vehicle seat has been adjusted, reinstall the child restraint.**
- **When your child restraint is not in use, secure it in the vehicle with the seat belt or LATCH anchorages, or remove it from the vehicle. Do not leave it loose in the vehicle. In a sudden stop or accident, it could strike the occupants or seatbacks and cause serious personal injury.**

Integrated Child Booster Seat — If Equipped

The Integrated Child Booster Seat is located in each outboard second-row passenger seat.

WARNING!

DEATH or SERIOUS INJURY can occur,

- **Follow all instructions on the child restraint and in the vehicle's owner's manual.**
- **The second row bench with Integrated Child Booster Seat must remain in the full rear position during use.**
- **Use only with children who weigh between 48 and 85 pounds (22 and 39 kg) and whose height is between 47 and 57 in (119 and 145 cm).**

To position a child into the Integrated Child Booster Seat follow these steps:

1. Slide the second row seat to the full rear position to use the Integrated Child Booster Seat.

NOTE: The second row bench with Integrated Child Booster Seat must remain in the full rear position during use.

2. Pull the release loop forward to release the latch and seat cushion.

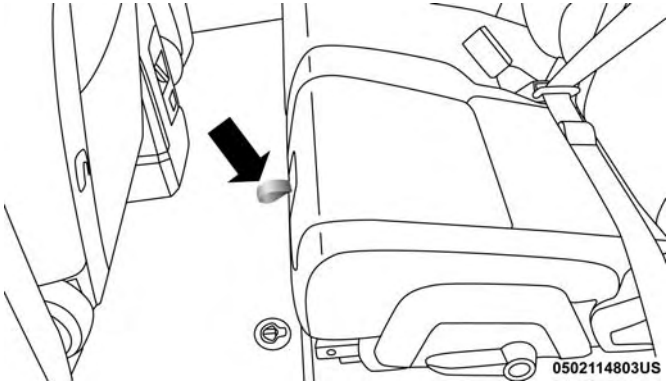

Release Loop

3. Lift the seat cushion up and push back to lock it in the booster seat position.

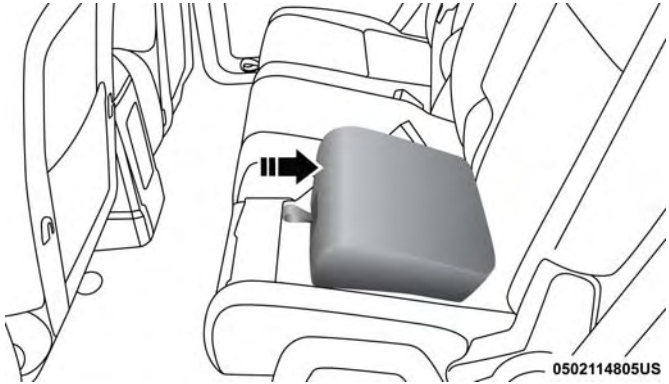

Booster Seat

4. Place the child upright in the seat with their back firmly against the seatback.
5. Grasp the latch plate and pull out the seat belt.
6. Slide the latch plate up the webbing as far as necessary to allow the seat belt to go around the child's lap.

NOTE: The lap portion of the seat belt should be low on the hips and as snug as possible.

7. Once the seat belt is long enough to fit properly, insert the latch plate into the buckle until you hear a "click."

Proper Belt Use

8. To remove the slack from the lap belt, pull upward on the shoulder portion of the seat belt.
9. To release the seat belt, push the red button on the buckle.

WARNING!

Securely lock the seat cushion into position before using the seat. Otherwise, the seat will not provide the proper stability for child seats and/or passengers. An improperly latched seat cushion could cause serious injury or death.

WARNING!

In a severe collision, the booster seat may be damaged and should be inspected by an authorized dealer and possibly replaced before it is used again. The integrated booster seat must be replaced following a collision that meets any of the following criteria:

- **The vehicle cannot be driven away from the scene.**
- **The vehicle door nearest the seat has been damaged.**
- **At least one occupant was injured in the crash.**
- **At least one air bag in the vehicle deployed in the crash.**

Children Too Large For Booster Seats

Children who are large enough to wear the shoulder belt comfortably, and whose legs are long enough to bend over the front of the seat when their back is against the seatback, should use the seat belt in a rear seat. Use this simple 5-step test to decide whether the child can use the vehicle's seat belt alone:

1. Can the child sit all the way back against the back of the vehicle seat?
2. Do the child's knees bend comfortably over the front of the vehicle seat – while the child is still sitting all the way back?
3. Does the shoulder belt cross the child's shoulder between their neck and arm?
4. Is the lap part of the belt as low as possible, touching the child's thighs and not the stomach?
5. Can the child stay seated like this for the whole trip?

If the answer to any of these questions was "no," then the child still needs to use a booster seat in this vehicle. If the child is using the lap/shoulder belt, check seat belt fit periodically and make sure the seat belt buckle is latched. A child's squirming or slouching can move the belt out of position. If the shoulder belt contacts the face or neck, move the child closer to the center of the vehicle, or use a booster seat to position the seat belt on the child correctly.

WARNING!

Never allow a child to put the shoulder belt under an arm or behind their back. In a crash, the shoulder belt will not protect a child properly, which may result in serious injury or death. A child must always wear both the lap and shoulder portions of the seat belt correctly.

Recommendations For Attaching Child Restraints

Restraint Type	Combined Weight of the Child + Child Restraint	Use Any Attachment Method Shown With An "X" Below			
		LATCH – Lower Anchors Only	Seat Belt Only	LATCH – Lower Anchors + Top Tether Anchor	Seat Belt + Top Tether Anchor
Rear-Facing Child Restraint	Up to 65 lbs (29.5 kg)	X	X		
Rear-Facing Child Restraint	More than 65 lbs (29.5 kg)		X		
Forward-Facing Child Restraint	Up to 65 lbs (29.5 kg)			X	X
Forward-Facing Child Restraint	More than 65 lbs (29.5 kg)				X

Lower Anchors And Tethers For CHildren (LATCH) Restraint System

LATCH Label

Your vehicle is equipped with the child restraint anchorage system called LATCH, which stands for Lower Anchors and Tethers for CHildren. The LATCH system has three vehicle anchor points for installing LATCH-equipped child seats. There are two lower anchorages located at the back of the seat cushion where it meets the seatback and one top tether anchorage located behind the seating position. These anchorages are used to install LATCH-equipped child seats without using the vehicle's seat belts. Some seating positions may have a top tether anchorage but no lower anchorages. In these seating positions, the seat belt must be used with the top tether anchorage to install the child restraint. Please see the following table for more information.

LATCH Positions For Installing Child Restraints In This Vehicle

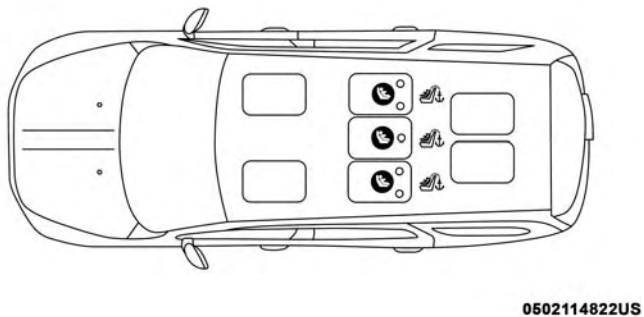

Lower Anchor / Top Tether Locations (Third Row Shown – If Equipped)

Lower Anchorage Symbol (2 Anchorages Per Seating Position)
Top Tether Anchorage Symbol

Frequently Asked Questions About Installing Child Restraints With LATCH		
What is the weight limit (child's weight + weight of the child restraint) for using the LATCH anchorage system to attach the child restraint?	65 lbs (29.5 kg)	Use the LATCH anchorage system until the combined weight of the child and the child restraint is 65 lbs (29.5 kg). Use the seat belt and tether anchor instead of the LATCH system once the combined weight is more than 65 lbs (29.5 kg).
Can the LATCH anchorages and the seat belt be used together to attach a rear-facing or forward-facing child restraint?	No	Do not use the seat belt when you use the LATCH anchorage system to attach a rear-facing or forward-facing child restraint. Booster seats may be attached to the LATCH anchorages if allowed by the booster seat manufacturer. See your booster seat owner's manual for more information.
Can two child restraints be attached using a common lower LATCH anchorage?	No	Never "share" a LATCH anchorage with two or more child restraints. If the center position does not have dedicated LATCH lower anchorages, use the seat belt to install a child seat in the center position next to a child seat using the LATCH anchorages in an outboard position.

Frequently Asked Questions About Installing Child Restraints With LATCH		
Can the rear-facing child restraint touch the back of the front passenger seat?	Yes	The child seat may touch the back of the front passenger seat if the child restraint manufacturer also allows contact. See your child restraint Owner's Manual for more information.
Can the head restraints be removed?	Yes	All second row head restraints are removable.

Locating The LATCH Anchorages

The lower anchorages are round bars that are found at the rear of the seat cushion where it meets the seatback. They are just visible when you lean into the rear seat to install the child restraint. You will easily feel them if you run your finger along the gap between the seatback and seat cushion.

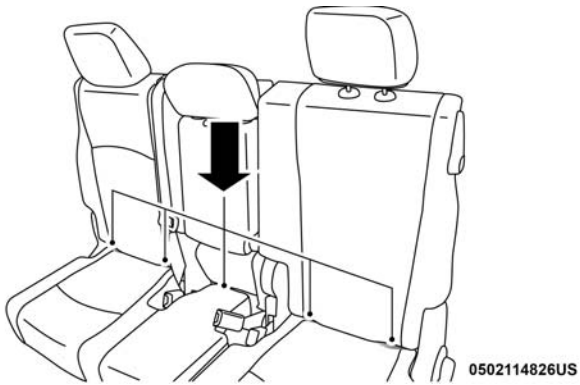

Rear Seat Lower Anchorages (Second Row 60/40)

Locating The Upper Tether Anchorages

There are tether strap anchorages behind each second row seating position, located on the back of the seat, near the floor.

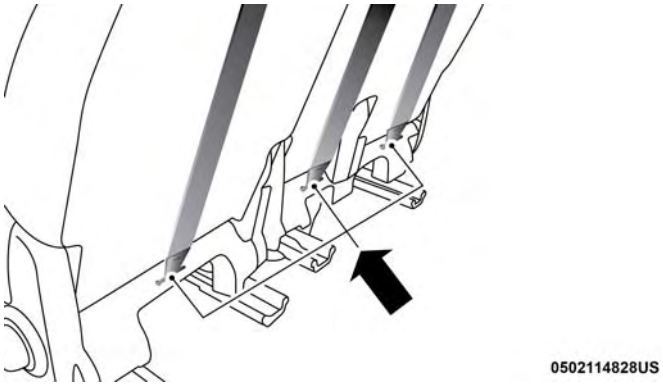

Tether Anchorages (Second Row 60/40)

LATCH-compatible child restraint systems will be equipped with a rigid bar or a flexible strap on each side. Each will have a hook or connector to attach to the lower anchorage and a way to tighten the connection to the anchorage. Forward-facing child restraints and some rear-facing child restraints will also be equipped with a tether strap. The tether strap will have a hook at the end to attach to the top tether anchorage and a way to tighten the strap after it is attached to the anchorage.

Center Seat LATCH

This vehicle has 5 lower LATCH anchorages in the rear seat. Anchorages A and B are used for the right outboard position behind the front passenger (1). Anchorages D and E are used for the left outboard position behind the driver (3). Anchorages B and C are used for the center seating position (2). Do not install a LATCH-compatible child restraint using anchorages C and D. This is not a LATCH-compatible position in your vehicle.

You can install up to two child seats using the LATCH system at the same time. If you are installing three child restraints, you must use the seat belt to install the center child restraint. You can use either the LATCH anchors for positions (1) and (3) or the vehicle's seat belt for installing the child seats in the outboard positions.

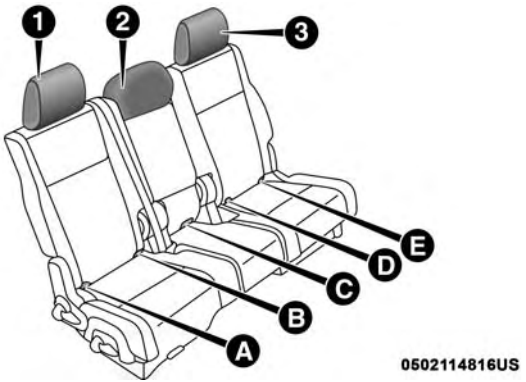

Lower Anchors

Options for installing two child seats using the LATCH anchorages in this vehicle:

1. Right and left outboard seating positions (1 and 3): Install the child seats in the right and left outboard seating positions using lower anchorages A and B, and D and E. Do not use the center seat anchorage, C. If the child seats do not block the center seat belt webbing and buckle, the center seat belt can be used to restrain an occupant or child restraint in the center seating position.
2. Left outboard and center seating positions (3 and 2): Install the first child seat in the left outboard seating position using lower anchorages D and E. Install the second child seat using the center anchorages, B and C. Do not use the outer anchorage closest to the opposite door, A. Do not use the remaining right outboard seating position (1) for any occupant. The center child restraint will block the seat belt buckle for this position.

WARNING!

- **Use anchorages B and C to install a LATCH-compatible child restraint in the center seating position (2). Do not install a LATCH-compatible child restraint using anchorages C and D. This is not a LATCH-compatible position in your vehicle.**
- **A child restraint installed in the center position (2) will block the seat belt buckle for the empty right outboard seat behind the front passenger (1). Do not use this seat for another occupant.**

(Continued)

WARNING! ***(Continued)***

- **Never use the same lower anchorage to attach more than one child restraint.**
- **If you are installing three child restraints next to each other, you must use the seat belt and the center tether anchor for the center position. You can then use either the LATCH anchors or the vehicle's seat belt for installing the child seats in the outboard positions. Please refer to "Installing the LATCH-Compatible Child Restraint System" for typical installation instructions.**

Always follow the directions of the child restraint manufacturer when installing your child restraint. Not all child restraint systems will be installed as described here.

To Install A LATCH-Compatible Child Restraint

If the selected seating position has a Switchable Automatic Locking Retractor (ALR) seat belt, stow the seat belt, following the instructions below. See the section "Installing Child Restraints Using the Vehicle Seat Belt" to check what type of seat belt each seating position has.

1. Loosen the adjusters on the lower straps and on the tether strap of the child seat so that you can more easily attach the hooks or connectors to the vehicle anchorages.
2. Place the child seat between the lower anchorages for that seating position. For some second row seats, you may need to recline the seat and / or raise the head restraint to get a better fit. If the rear seat can be moved forward and rearward in the vehicle, you may wish to move it to its rear-most position to make room for the child seat. You may also move the front seat forward to allow more room for the child seat.
3. Attach the lower hooks or connectors of the child restraint to the lower anchorages in the selected seating position.
4. If the child restraint has a tether strap, connect it to the top tether anchorage. See the section "Installing Child Restraints Using the Top Tether Anchorage" for directions to attach a tether anchor.
5. Tighten all of the straps as you push the child restraint rearward and downward into the seat. Remove slack in the straps according to the child restraint manufacturer's instructions.

6. Test that the child restraint is installed tightly by pulling back and forth on the child seat at the belt path. It should not move more than 1 inch (25.4 mm) in any direction.

How To Stow An Unused Switchable-ALR (ALR) Seat Belt:

When using the LATCH attaching system to install a child restraint, stow all ALR seat belts that are not being used by other occupants or being used to secure child restraints. An unused belt could injure a child if they play with it and accidentally lock the seat belt retractor. Before installing a child restraint using the LATCH system, buckle the seat belt behind the child restraint and out of the child's reach. If the buckled seat belt interferes with the child restraint installation, instead of buckling it behind the child restraint, route the seat belt through the child restraint belt path and then buckle it. Do not lock the seat belt. Remind all children in the vehicle that the seat belts are not toys and that they should not play with them.

WARNING!

- **Improper installation of a child restraint to the LATCH anchorages can lead to failure of the restraint. The child could be badly injured or killed. Follow the child restraint manufacturer's directions exactly when installing an infant or child restraint.**
- **Child restraint anchorages are designed to withstand only those loads imposed by correctly-fitted child restraints. Under no circumstances are they to be used for adult seat belts, harnesses, or for attaching other items or equipment to the vehicle.**

Installing Child Restraints Using The Vehicle Seat Belt

Child restraint systems are designed to be secured in vehicle seats by lap belts or the lap belt portion of a lap/shoulder belt.

WARNING!

- **Improper installation or failure to properly secure a child restraint can lead to failure of the restraint. The child could be badly injured or killed.**
- **Follow the child restraint manufacturer's directions exactly when installing an infant or child restraint.**

The seat belts in the passenger seating positions are equipped with either a Switchable Automatic Locking Retractor (ALR) or a cinching latch plate or both. Both types of seat belts are designed to keep the lap portion of the seat belt tight around the child restraint so that it is not necessary to use a locking clip. The ALR retractor can be "switched" into a locked mode by pulling all of the webbing out of the retractor and then letting the webbing retract back into the retractor. If it is locked, the ALR will make a clicking noise while the webbing is pulled back into the retractor. Refer to the "Automatic Locking Mode" description in "Switchable Automatic Locking Retractors (ALR)" under "Occupant Restraint Systems" for additional information on ALR. The cinching latch plate is designed to hold the lap portion of the seat belt tight when webbing is pulled tight and straight through a child restraint's belt path.

Please see the table below and the following sections for more information.

Lap/Shoulder Belt Systems For Installing Child Restraints In This Vehicle

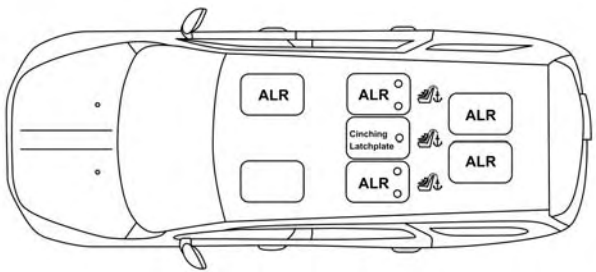

Automatic Locking Retractor (ALR) And CINCH Locations (Third Row Shown)

Cinching Latchplate = CINCH
ALR = Switchable Automatic Locking Retractor
Top Tether Anchorage Symbol

Frequently Asked Questions About Installing Child Restraints With Seat Belts		
What is the weight limit (child's weight + weight of the child restraint) for using the Tether Anchor with the seat belt to attach a forward facing child restraint?	Weight limit of the Child Restraint	Always use the tether anchor when using the seat belt to install a forward facing child restraint, up to the recommended weight limit of the child restraint.
Can the rear-facing child restraint touch the back of the front passenger seat?	Yes	Contact between the front passenger seat and the child restraint is allowed, if the child restraint manufacturer also allows contact.
Can the head restraints be removed?	Yes	All second row head restraints are removable.
Can the buckle stalk be twisted to tighten the seat belt against the belt path of the child restraint?	Yes – CINCH No – ALR	In positions with cinching latch plates (CINCH), the buckle stalk may be twisted up to 3 full turns. Do not twist the buckle stalk in a seating position with an ALR retractor.

Installing A Child Restraint With A Switchable Automatic Locking Retractor (ALR):

Child restraint systems are designed to be secured in vehicle seats by lap belts or the lap belt portion of a lap/shoulder belt.

WARNING!

- **Improper installation or failure to properly secure a child restraint can lead to failure of the restraint. The child could be badly injured or killed.**

WARNING! ***(Continued)***

- **Follow the child restraint manufacturer's directions exactly when installing an infant or child restraint.**

1. Place the child seat in the center of the seating position. For some second row seats, you may need to recline the seat and/or raise the head restraint to get a better fit. If the rear seat can be moved forward and rearward in the vehicle, you may wish to move it to its rear-most position to make room for the child seat. You may also move the front seat forward to allow more room for the child seat.
2. Pull enough of the seat belt webbing from the retractor to pass it through the belt path of the child restraint. Do not twist the belt webbing in the belt path.
3. Slide the latch plate into the buckle until you hear a "click."
4. Pull on the webbing to make the lap portion tight against the child seat.
5. To lock the seat belt, pull down on the shoulder part of the belt until you have pulled all the seat belt webbing out of the retractor. Then, allow the webbing to retract back into the retractor. As the webbing retracts, you will hear a clicking sound. This means the seat belt is now in the Automatic Locking mode.
6. Try to pull the webbing out of the retractor. If it is locked, you should not be able to pull out any webbing. If the retractor is not locked, repeat step 5.
7. Finally, pull up on any excess webbing to tighten the lap portion around the child restraint while you push the child restraint rearward and downward into the vehicle seat.
8. If the child restraint has a top tether strap and the seating position has a top tether anchorage, connect the tether strap to the anchorage and tighten the tether strap. See the section "Installing Child Restraints Using the Top Tether Anchorage" for directions to attach a tether anchor.
9. Test that the child restraint is installed tightly by pulling back and forth on the child seat at the belt path. It should not move more than 1 inch (25.4 mm) in any direction.

Any seat belt system will loosen with time, so check the belt occasionally, and pull it tight if necessary.

Installing A Child Restraint With A Cinching Latch Plate (CINCH) — If Equipped:

Child restraint systems are designed to be secured in vehicle seats by lap belts or the lap belt portion of a lap/shoulder belt.

WARNING!

- **Improper installation or failure to properly secure a child restraint can lead to failure of the restraint. The child could be badly injured or killed.**
- **Follow the child restraint manufacturer's directions exactly when installing an infant or child restraint.**

1. Place the child seat in the center of the seating position. For some second row seats, you may need to recline the seat and / or raise the head restraint to get a better fit. If the rear seat can be moved forward and rearward in the vehicle, you may wish to move it to its rear-most position to make room for the child seat. You may also move the front seat forward to allow more room for the child seat.
2. Next, pull enough of the seat belt webbing from the retractor to pass it through the belt path of the child restraint. Do not twist the belt webbing in the belt path.
3. Slide the latch plate into the buckle until you hear a "click."
4. Finally, pull up on any excess webbing to tighten the lap portion around the child restraint while you push the child restraint rearward and downward into the vehicle seat.
5. If the child restraint has a top tether strap and the seating position has a top tether anchorage, connect the tether strap to the anchorage and tighten the tether strap. See the section "Installing Child Restraints Using the Top Tether Anchorage" for directions to attach a tether anchor.
6. Test that the child restraint is installed tightly by pulling back and forth on the child seat at the belt path. It should not move more than 1 inch (25.4 mm) in any direction.

Any seat belt system will loosen with time, so check the belt occasionally, and pull it tight if necessary.

If the buckle or the cinching latch plate is too close to the belt path opening of the child restraint, you may have trouble tightening the seat belt. If this happens, disconnect the latch plate from the buckle and twist the short buckle-end belt up to three full turns to shorten it. Insert the latch plate into the buckle with the release button facing out, away from the child restraint. Repeat steps 4 to 6, above, to complete the installation of the child restraint.

If the belt still cannot be tightened after you shorten the buckle, disconnect the latch plate from the buckle, turn the buckle around one half turn, and insert the latch plate into the buckle again. If you still cannot make the child restraint installation tight, try a different seating position.

Installing Child Restraints Using The Top Tether Anchorage

WARNING!

Do not attach a tether strap for a rear-facing car seat to any location in front of the car seat, including the seat frame or a tether anchorage. Only attach the tether strap of a rear-facing car seat to the tether anchorage that is approved for that seating position, located

(Continued)

WARNING! ***(Continued)***

behind the top of the vehicle seat. See the section "Lower Anchors and Tethers for CHildren (LATCH) Restraint System" for the location of approved tether anchorages in your vehicle.

1. Look behind the seating position where you plan to install the child restraint to find the tether anchorage. You may need to move the seat forward to provide better access to the tether anchorage. If there is no top tether anchorage for that seating position, move the child restraint to another position in the vehicle if one is available.

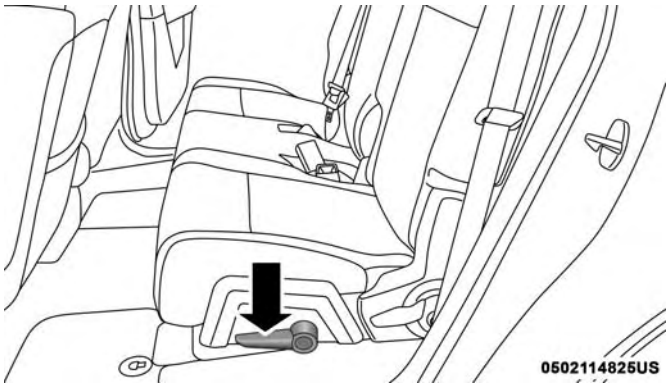

Seat Track Release Lever

2. Route the tether strap to provide the most direct path for the strap between the anchor and the child seat. If your vehicle is equipped with adjustable rear head restraints, raise the head restraint, and where possible, route the tether strap under the head restraint and between the two posts. If not possible, lower the head restraint and pass the tether strap around the outboard side of the head restraint.
3. Attach the tether strap hook of the child restraint to the top tether anchorage as shown in the diagram.
4. Remove slack in the tether strap according to the child restraint manufacturer's instructions.

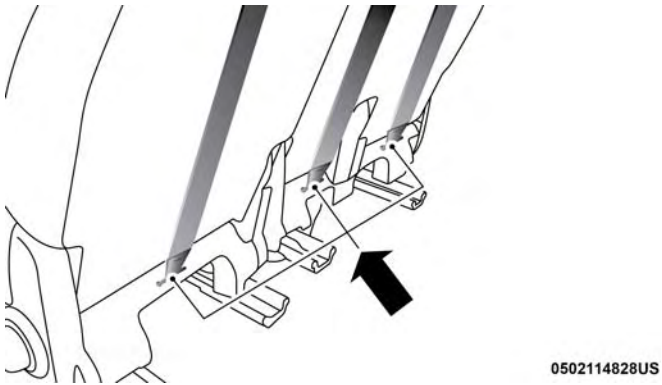

Rear Seat Tether Strap Mounting (Second Row 60/40)

WARNING!

- **An incorrectly anchored tether strap could lead to increased head motion and possible injury to the child. Use only the anchorage position directly behind the child seat to secure a child restraint top tether strap.**
- **If your vehicle is equipped with a split rear seat, make sure the tether strap does not slip into the opening between the seatbacks as you remove slack in the strap.**

Transporting Pets

Air Bags deploying in the front seat could harm your pet. An unrestrained pet will be thrown about and possibly injured, or injure a passenger during panic braking or in a collision.

Pets should be restrained in the rear seat in pet harnesses or pet carriers that are secured by seat belts.

SAFETY TIPS

Transporting Passengers

NEVER TRANSPORT PASSENGERS IN THE CARGO AREA.

WARNING!

- **Do not leave children or animals inside parked vehicles in hot weather. Interior heat build-up may cause serious injury or death.**
- **It is extremely dangerous to ride in a cargo area, inside or outside of a vehicle. In a collision, people riding in these areas are more likely to be seriously injured or killed.**
- **Do not allow people to ride in any area of your vehicle that is not equipped with seats and seat belts.**
- **Be sure everyone in your vehicle is in a seat and using a seat belt properly.**

Exhaust Gas

WARNING!

Exhaust gases can injure or kill. They contain carbon monoxide (CO), which is colorless and odorless. Breathing it can make you unconscious and can eventually poison you. To avoid breathing (CO), follow these safety tips:

- **Do not run the engine in a closed garage or in confined areas any longer than needed to move your vehicle in or out of the area.**
- **If you are required to drive with the trunk/liftgate/rear doors open, make sure that all windows are closed and the climate control BLOWER switch is set at high speed. DO NOT use the recirculation mode.**
- **If it is necessary to sit in a parked vehicle with the engine running, adjust your heating or cooling controls to force outside air into the vehicle. Set the blower at high speed.**

The best protection against carbon monoxide entry into the vehicle body is a properly maintained engine exhaust system.

Whenever a change is noticed in the sound of the exhaust system, when exhaust fumes can be detected inside the vehicle, or when the underside or rear of the vehicle is damaged, have a competent mechanic inspect the complete exhaust system and adjacent body areas for broken, damaged, deteriorated, or mispositioned parts. Open seams or loose connections could permit exhaust fumes to seep into the passenger compartment. In addition, inspect the exhaust system each time the vehicle is raised for lubrication or oil change. Replace as required.

Safety Checks You Should Make Inside The Vehicle

Seat Belts

Inspect the seat belt system periodically, checking for cuts, frays, and loose parts. Damaged parts must be replaced immediately. Do not disassemble or modify the system.

Front seat belt assemblies must be replaced after a collision. Rear seat belt assemblies must be replaced after a collision if they have been damaged (i.e., bent retractor, torn webbing, etc.). If there is any question regarding seat belt or retractor condition, replace the seat belt.

Air Bag Warning Light

The Air Bag warning light will turn on for four to eight seconds as a bulb check when the ignition switch is first turned to ON/RUN. If the light is either not on during starting, stays on, or turns on while driving, have the system inspected at your authorized dealer as soon as possible. After the bulb check, this light will illuminate with a single chime when a fault with the Air Bag System has been detected. It will stay on until the fault is removed. If the light comes on intermittently or remains on while driving, have your authorized dealer service the vehicle immediately. Refer to "Occupant Restraint Systems" in "Safety" for further information.

Defroster

Check operation by selecting the defrost mode and place the blower control on high speed. You should be able to feel the air directed against the windshield. See your authorized dealer for service if your defroster is inoperable.

Floor Mat Safety Information

Always use floor mats designed to fit your vehicle. Only use a floor mat that does not interfere with the operation of the accelerator, brake or clutch pedals. Only use a floor mat that is securely attached using the floor mat fasteners so it cannot slip out of position and interfere with the accelerator, brake or clutch pedals or impair safe operation of your vehicle in other ways.

WARNING!

An improperly attached, damaged, folded, or stacked floor mat, or damaged floor mat fasteners may cause your floor mat to interfere with the accelerator, brake, or clutch pedals and cause a loss of vehicle control. To prevent SERIOUS INJURY or DEATH:

- **ALWAYS securely attach your floor mat using the floor mat fasteners. DO NOT install your floor mat upside down or turn your floor mat over. Lightly pull to confirm mat is secured using the floor mat fasteners on a regular basis.**

(Continued)

WARNING! *(Continued)*

- **ALWAYS REMOVE THE EXISTING FLOOR MAT FROM THE VEHICLE before installing any other floor mat. NEVER install or stack an additional floor mat on top of an existing floor mat.**
- **ONLY install floor mats designed to fit your vehicle. NEVER install a floor mat that cannot be properly attached and secured to your vehicle. If a floor mat needs to be replaced, only use a FCA approved floor mat for the specific make, model, and year of your vehicle.**
- **ONLY use the driver's side floor mat on the driver's side floor area. To check for interference, with the vehicle properly parked with the engine off, fully depress the accelerator, the brake, and the clutch pedal (if present) to check for interference. If your floor mat interferes with the operation of any pedal, or is not secure to the floor, remove the floor mat from the vehicle and place the floor mat in your trunk.**
- **ONLY use the passenger's side floor mat on the passenger's side floor area.**

(Continued)

WARNING! *(Continued)*

- **ALWAYS make sure objects cannot fall or slide into the driver's side floor area when the vehicle is moving. Objects can become trapped under accelerator, brake, or clutch pedals and could cause a loss of vehicle control.**
- **NEVER place any objects under the floor mat (e.g., towels, keys, etc.). These objects could change the position of the floor mat and may cause interference with the accelerator, brake, or clutch pedals.**
- **If the vehicle carpet has been removed and re-installed, always properly attach carpet to the floor and check the floor mat fasteners are secure to the vehicle carpet. Fully depress each pedal to check for interference with the accelerator, brake, or clutch pedals then re-install the floor mats.**
- **It is recommended to only use mild soap and water to clean your floor mats. After cleaning, always check your floor mat has been properly installed and is secured to your vehicle using the floor mat fasteners by lightly pulling mat.**

Periodic Safety Checks You Should Make Outside The Vehicle

Tires

Examine tires for excessive tread wear and uneven wear patterns. Check for stones, nails, glass, or other objects lodged in the tread or sidewall. Inspect the tread for cuts and cracks. Inspect sidewalls for cuts, cracks, and bulges. Check the wheel nuts for tightness. Check the tires (including spare) for proper cold inflation pressure.

Lights

Have someone observe the operation of brake lights and exterior lights while you work the controls. Check turn signal and high beam indicator lights on the instrument panel.

Door Latches

Check for proper closing, latching, and locking.

Fluid Leaks

Check area under the vehicle after overnight parking for fuel, coolant, oil, or other fluid leaks. Also, if gasoline fumes are detected or if fuel, or brake fluid leaks are suspected. The cause should be located and corrected immediately.

STARTING AND OPERATING

CONTENTS

■ STARTING THE ENGINE 233
- □ Automatic Transmission 233
- □ Normal Starting 234
- □ Keyless Enter-N-Go — Ignition 235
- □ Cold Weather Operation (Below –22°F Or –30°C) 236
- □ If Engine Fails To Start 236
- □ After Starting. 236

■ ENGINE BLOCK HEATER — IF EQUIPPED 236

■ ENGINE BREAK-IN RECOMMENDATIONS 237

■ PARKING BRAKE 237

■ AUTOMATIC TRANSMISSION 239
- □ Ignition Park Interlock 240
- □ Brake/Transmission Shift Interlock System 241
- □ Four-Speed Or Six-Speed Automatic Transmission 241
- □ Gear Ranges 242

■ POWER STEERING 248
- □ Power Steering Fluid Check 249

■ ALL WHEEL DRIVE (AWD) — IF EQUIPPED . . .250

■ SPEED CONTROL — IF EQUIPPED 250
- □ To Activate 251
- □ To Set A Desired Speed. 251
- □ To Vary The Speed Setting 251
- □ To Accelerate For Passing 252
- □ To Resume Speed 253
- □ To Deactivate 253

■ PARKSENSE REAR PARK ASSIST — IF EQUIPPED 253

- ParkSense Sensors 253
- ParkSense Warning Display. 254
- ParkSense Display 254
- Enabling And Disabling ParkSense 257
- Service The ParkSense Rear Park Assist System. .257
- Cleaning The ParkSense System. 258
- ParkSense System Usage Precautions 258

■ PARKVIEW REAR BACK UP CAMERA — IF EQUIPPED 259

■ REFUELING THE VEHICLE 261
- Loose Fuel Filler Cap Message 262

■ VEHICLE LOADING 263
- Vehicle Certification Label 263
- Gross Vehicle Weight Rating (GVWR) 263
- Gross Axle Weight Rating (GAWR) 263
- Overloading 264
- Loading 264

■ TRAILER TOWING 264
- Common Towing Definitions. 264
- Trailer Hitch Classification 266
- Trailer Towing Weights (Maximum Trailer Weight Ratings) 267
- Trailer And Tongue Weight 269
- Towing Requirements 269
- Towing Tips 273

■ RECREATIONAL TOWING (BEHIND MOTORHOME, ETC.) 275
- Towing This Vehicle Behind Another Vehicle. . . .275

■ DRIVING TIPS 276
- Driving On Slippery Surfaces 276
- Driving Through Water 277

STARTING THE ENGINE

Before starting your vehicle, adjust your seat, adjust the inside and outside mirrors, fasten your seat belt, and if present, instruct all other occupants to buckle their seat belts.

WARNING!

- **When exiting the vehicle, always make sure the keyless ignition node is in "OFF" mode, remove the key fob from the vehicle and lock the vehicle.**
- **Never leave children alone in a vehicle, or with access to an unlocked vehicle. Leaving children in a vehicle unattended is dangerous for a number of reasons. A child or others could be seriously or fatally injured. Children should be warned not to touch the parking brake, brake pedal or the transmission gear selector.**
- **Do not leave the key fob in or near the vehicle (or in a location accessible to children), and do not leave the ignition (of a vehicle equipped with Keyless Enter-N-Go) in the ACC or ON/RUN mode. A child could operate power windows, other controls, or move the vehicle.**

(Continued)

WARNING! ***(Continued)***

- **Do not leave children or animals inside parked vehicles in hot weather. Interior heat build-up may cause serious injury or death.**

Automatic Transmission

The gear selector must be in the NEUTRAL or PARK position before you can start the engine. Apply the brakes before shifting into any driving gear.

CAUTION!

Damage to the transmission may occur if the following precautions are not observed:

- **Do not shift from REVERSE, PARK, or NEUTRAL into any forward gear when the engine is above idle speed.**
- **Shift into PARK only after the vehicle has come to a complete stop.**
- **Shift into or out of REVERSE only after the vehicle has come to a complete stop and the engine is at idle speed.**
- **Before shifting into any gear, make sure your foot is firmly on the brake pedal.**

Normal Starting

To Turn On The Engine Using The ENGINE START/STOP Button

1. The transmission must be in PARK.
2. Press and hold the brake pedal while pushing the ENGINE START/STOP button once.
3. The system takes over and attempts to start the vehicle. If the vehicle fails to start, the starter will disengage automatically after 10 seconds.
4. If you wish to stop the cranking of the engine prior to the engine starting, push the button again.

NOTE: Normal starting of either a cold or a warm engine is obtained without pumping or pressing the accelerator pedal.

To Turn Off The Engine Using ENGINE START/STOP Button

1. Place the gear selector in PARK, then push and release the ENGINE START/STOP button.
2. The ignition will return to the OFF mode.
3. If the gear selector is not in PARK, the ENGINE START/STOP button must be held for two seconds or three short pushes in a row with the vehicle speed above 5 mph (8 km/h) before the engine will shut off. The ignition will remain in the ACC mode until the gear selector is in PARK and the button is pushed twice to the OFF mode. If the gear selector is not in PARK and the ENGINE START/STOP button is pushed once, the instrument cluster will display a “Vehicle Not In Park” message and the engine will remain running. Never leave a vehicle out of the PARK position, or it could roll.

NOTE: If the gear selector is in NEUTRAL, push and release the ENGINE START/STOP button with the vehicle speed below 5 mph (8 km/h) before the engine will shut off, and the ignition will remain in the ACC position. The system will automatically time out and the ignition will cycle to the OFF mode after 30 minutes of inactivity if the ignition is left in the ACC or RUN (engine not running) mode and the transmission is in PARK.

ENGINE START/STOP Button Functions — With Driver's Foot OFF The Brake Pedal (In PARK Or NEUTRAL Position)

The ENGINE START/STOP button operates similar to an ignition switch. It has three modes: OFF, ACC, and RUN. To change the ignition modes without starting the vehicle and use the accessories, follow these directions:

1. Start with the ignition in the OFF mode.
2. Push the ENGINE START/STOP button once to place the ignition to the ACC mode.
3. Push the ENGINE START/STOP button a second time to place the ignition to the RUN mode.
4. Push the ENGINE START/STOP button a third time to return the ignition to the OFF mode.

Keyless Enter-N-Go — Ignition

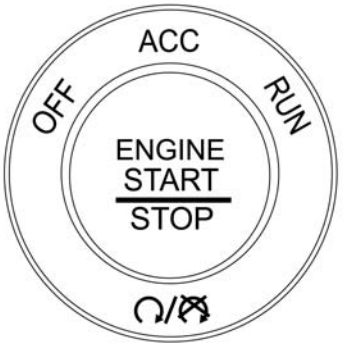

0101113902US

Keyless Push Button Ignition

This feature allows the driver to operate the ignition switch with the push of a button, as long as the Remote Start/ Keyless Enter-N-Go key fob is in the passenger compartment.

Cold Weather Operation (Below –22°F Or −30°C)

To ensure reliable starting at these temperatures, use of an externally powered electric engine block heater (available from your authorized dealer) is recommended.

If Engine Fails To Start

WARNING!

- **Never pour fuel or other flammable liquid into the throttle body air inlet opening in an attempt to start the vehicle. This could result in flash fire causing serious personal injury.**
- **Do not attempt to push or tow your vehicle to get it started. Vehicles equipped with an automatic transmission cannot be started this way. Unburned fuel could enter the catalytic converter and once the engine has started, ignite and damage the converter and vehicle.**
- **If the vehicle has a discharged battery, booster cables may be used to obtain a start from a booster battery or the battery in another vehicle. This type of start can be dangerous if done improperly. Refer to "Jump-Starting Procedure" in "In Case Of Emergency" for further information.**

After Starting

The idle speed is controlled automatically, and it will decrease as the engine warms up.

ENGINE BLOCK HEATER — IF EQUIPPED

The engine block heater warms the engine, and permits quicker starts in cold weather. Connect the cord to a standard 110-115 Volt AC electrical outlet with a grounded, three-wire extension cord.

The engine block heater must be plugged in at least one hour to have an adequate effect on the engine.

The engine block heater cord is bundled under the hood between the headlight assembly and the Totally Integrated Power Module (Fuse Box) on the driver's side of the vehicle.

WARNING!

Remember to disconnect the engine block heater cord before driving. Damage to the 110-115 Volt electrical cord could cause electrocution.

ENGINE BREAK-IN RECOMMENDATIONS

A long break-in period is not required for the engine and drivetrain (transmission and axle) in your vehicle.

Drive moderately during the first 300 miles (500 km). After the initial 60 miles (100 km), speeds up to 50 or 55 mph (80 or 90 km/h) are desirable.

While cruising, brief full-throttle acceleration within the limits of local traffic laws contributes to a good break-in. Wide-open throttle acceleration in low gear can be detrimental and should be avoided.

The engine oil installed in the engine at the factory is a high-quality energy conserving type lubricant. Oil changes should be consistent with anticipated climate conditions under which vehicle operations will occur. For the recommended viscosity and quality grades, refer to “Fluids And Lubricants” in “Technical Specifications”.

CAUTION!

Never use Non-Detergent Oil or Straight Mineral Oil in the engine or damage may result.

NOTE: A new engine may consume some oil during its first few thousand miles (kilometers) of operation. This should be considered a normal part of the break-in and not interpreted as a problem. Please check your oil level with the engine oil indicator often during the break in period. Add oil as required.

PARKING BRAKE

Before exiting the vehicle, make sure that the parking brake is fully applied. Also, be certain to leave the transmission in PARK.

The foot operated parking brake is located below the lower left corner of the instrument panel. To apply the park brake, firmly push the park brake pedal fully. To release the parking brake, press the park brake pedal a second time and let your foot up as you feel the brake disengage.

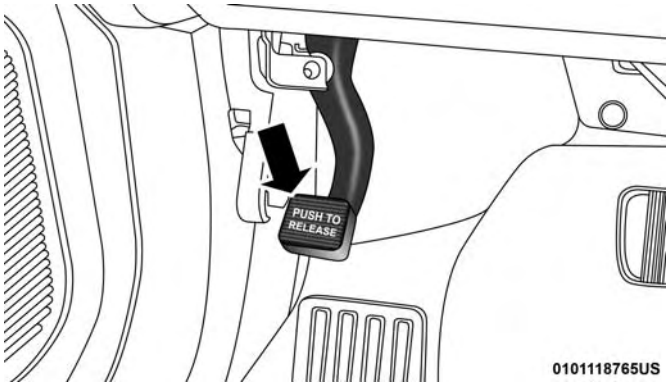

Parking Brake

When the parking brake is applied with the ignition switch ON, the "Brake Warning Light" in the instrument cluster will illuminate.

NOTE:

- When the parking brake is applied and the transmission is placed in gear, the "Brake Warning Light" will flash. If vehicle speed is detected, a chime will sound to alert the driver. Fully release the parking brake before attempting to move the vehicle.
- This light only shows that the parking brake is applied. It does not show the degree of brake application.

When parking on a hill, it is important to turn the front wheels toward the curb on a downhill grade and away from the curb on an uphill grade. For vehicles equipped with an automatic transmission, apply the parking brake before placing the gear selector in PARK, otherwise the load on the transmission locking mechanism may make it difficult to move the gear selector out of PARK. The parking brake should always be applied whenever the driver is not in the vehicle.

WARNING!

- Never use the PARK position as a substitute for the parking brake. Always apply the parking brake fully when parked to guard against vehicle movement and possible injury or damage.
- Never leave children alone in a vehicle, or with access to an unlocked vehicle. Leaving unattended children in a vehicle is dangerous for a number of reasons. A child or others could be seriously or fatally injured. Children should be warned not to touch the parking brake, brake pedal or the gear selector. Do not leave the key fob in or near the vehicle, or in a location accessible to children, and do not leave the ignition of a vehicle equipped with Keyless Enter-N-Go in the ACC or ON/RUN mode. A child could operate power windows, other controls, or move the vehicle.
- Be sure the parking brake is fully disengaged before driving; failure to do so can lead to brake failure and a collision.
- Always fully apply the parking brake when leaving your vehicle or it may roll and cause damage or injury. Also, be certain to leave the transmission in

(Continued)

WARNING! *(Continued)*

PARK. Failure to do so may cause the vehicle to roll and cause damage or injury.

CAUTION!

If the "Brake Warning Light" remains on with the parking brake released, a brake system malfunction is indicated. Have the brake system serviced by an authorized dealer immediately.

AUTOMATIC TRANSMISSION

WARNING!

- It is dangerous to shift out of PARK or NEUTRAL if the engine speed is higher than idle speed. If your foot is not firmly pressing the brake pedal, the vehicle could accelerate quickly forward or in reverse. You could lose control of the vehicle and hit someone or something. Only shift into gear when the engine is idling normally and your foot is firmly pressing the brake pedal.

(Continued)

WARNING! *(Continued)*

- **Unintended movement of a vehicle could injure those in or near the vehicle. As with all vehicles, you should never exit a vehicle while the engine is running. Before exiting a vehicle, always come to a complete stop, then apply the parking brake, shift the transmission into PARK, and turn the ignition OFF. When the ignition is in the OFF mode, the transmission is locked in PARK, securing the vehicle against unwanted movement.**
- **When exiting the vehicle, always make sure the ignition is in the OFF mode, remove the key fob from the vehicle, and lock the vehicle.**
- **Never leave children alone in a vehicle, or with access to an unlocked vehicle. Allowing children to be in a vehicle unattended is dangerous for a number of reasons. A child or others could be seriously or fatally injured. Children should be warned not to touch the parking brake, brake pedal or the transmission gear selector.**
- **Do not leave the key fob in or near the vehicle (or in a location accessible to children), and do not leave the ignition in the ACC or ON/RUN mode. A child could operate power windows, other controls, or move the vehicle.**

CAUTION!

Damage to the transmission may occur if the following precautions are not observed:

- **Shift into or out of PARK or REVERSE only after the vehicle has come to a complete stop.**
- **Do not shift between PARK, REVERSE, NEUTRAL, or DRIVE when the engine is above idle speed.**
- **Before shifting into any gear, make sure your foot is firmly pressing the brake pedal.**

NOTE: You must press and hold the brake pedal while shifting out of PARK.

Ignition Park Interlock

This vehicle is equipped with an Ignition Park Interlock which requires the transmission to be in PARK before the ignition can be turned to the OFF mode. This helps the driver avoid inadvertently leaving the vehicle without placing the transmission in PARK. This system also locks the transmission in PARK whenever the ignition is in the OFF mode.

NOTE: The transmission is NOT locked in PARK when the ignition is in the ACC mode (even though the engine will be off). Ensure that the transmission is in PARK, and the ignition is OFF (not in ACC mode) before exiting the vehicle.

Brake/Transmission Shift Interlock System

This vehicle is equipped with a Brake Transmission Shift Interlock System (BTSI) that holds the transmission gear selector in PARK unless the brakes are applied. To shift the transmission out of PARK, the ignition must be in the ON/RUN mode (engine running or not) and the brake pedal must be pressed.

Four-Speed Or Six-Speed Automatic Transmission

The transmission gear position display (located in the instrument cluster) indicates the transmission gear range. You must press the brake pedal to move the gear selector out of PARK (refer to "Brake/Transmission Shift Interlock System" in this section). To drive, move the gear selector from PARK or NEUTRAL to the DRIVE position.

The electronically-controlled transmission provides a precise shift schedule. The transmission electronics are self-calibrating; therefore, the first few shifts on a new vehicle may be somewhat abrupt. This is a normal condition, and precision shifts will develop within a few hundred miles (kilometers).

Only shift from DRIVE to PARK or REVERSE when the accelerator pedal is released and the vehicle is stopped. Be sure to keep your foot on the brake pedal when shifting between these gears.

The transmission gear selector provides PARK, REVERSE, NEUTRAL, DRIVE, and AutoStick (-/+) shift positions. Manual shifts can be made using the AutoStick shift control. Moving the gear selector into the AutoStick (-/+) position (below the Drive position) activates Autostick mode, providing manual shift control and displaying the current gear in the instrument cluster. In AutoStick mode, tapping the gear selector left (-) or right (+) will manually select the transmission gear. Refer to "AutoStick" in this section for further information.

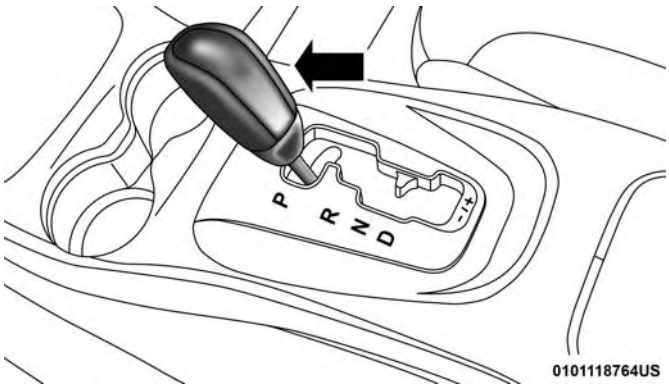

Gear Selector

Gear Ranges

Do not depress the accelerator pedal when shifting from PARK or NEUTRAL into another gear range.

NOTE: After selecting any gear range, wait a moment to allow the selected gear to engage before accelerating. This is especially important when the engine is cold.

PARK (P)

This range supplements the parking brake by locking the transmission. The engine can be started in this range. Never attempt to use PARK while the vehicle is in motion. Apply the parking brake when exiting the vehicle in this range.

When parking on a level surface, you may shift the transmission into PARK first, and then apply the parking brake.

When parking on a hill, apply the parking brake before shifting the transmission to PARK, otherwise the load on the transmission locking mechanism may make it difficult to move the gear selector out of PARK. As an added precaution, turn the front wheels toward the curb on a downhill grade and away from the curb on an uphill grade.

When exiting the vehicle, always:

- Apply the parking brake.
- Shift the transmission into PARK.
- Turn the ignition OFF.
- Remove the key fob from the vehicle.

WARNING!

- **Never use the PARK position as a substitute for the parking brake. Always apply the parking brake fully when exiting the vehicle to guard against vehicle movement and possible injury or damage.**
- **Your vehicle could move and injure you and others if it is not in PARK. Check by trying to move the gear selector out of PARK with the brake pedal released. Make sure the transmission is in PARK before exiting the vehicle.**
- **It is dangerous to shift out of PARK or NEUTRAL if the engine speed is higher than idle speed. If your foot is not firmly pressing the brake pedal, the vehicle could accelerate quickly forward or in reverse. You could lose control of the vehicle and hit someone or something. Only shift into gear when the**

(Continued)

WARNING! ***(Continued)***

engine is idling normally and your foot is firmly pressing the brake pedal.

- **Unintended movement of a vehicle could injure those in or near the vehicle. As with all vehicles, you should never exit a vehicle while the engine is running. Before exiting a vehicle, always come to a complete stop, then apply the parking brake, shift the transmission into PARK, and turn the ignition OFF. When the ignition is in the OFF mode, the transmission is locked in PARK, securing the vehicle against unwanted movement.**
- **When leaving the vehicle, always make sure the ignition is in the OFF mode, remove the key fob from the vehicle, and lock the vehicle.**
- **Never leave children alone in a vehicle, or with access to an unlocked vehicle. Allowing children to be in a vehicle unattended is dangerous for a number of reasons. A child or others could be seriously or fatally injured. Children should be warned not to touch the parking brake, brake pedal or the transmission gear selector.**

(Continued)

WARNING! *(Continued)*

- **Do not leave the key fob in or near the vehicle (or in a location accessible to children), and do not leave the ignition in the ACC or ON/RUN mode. A child could operate power windows, other controls, or move the vehicle.**

CAUTION!

- **Before moving the transmission gear selector out of PARK, you must turn the ignition to the ON/RUN mode, and also press the brake pedal. Otherwise, damage to the gear selector could result.**
- **DO NOT race the engine when shifting from PARK or NEUTRAL into another gear range, as this can damage the drivetrain.**

The following indicators should be used to ensure that you have properly engaged the transmission into the PARK position:

- When shifting into PARK, firmly move the gear selector all the way forward and to the left until it stops and is fully seated.
- Look at the transmission gear position display and verify that it indicates the PARK position (P).
- With brake pedal released, verify that the gear selector will not move out of PARK.

REVERSE (R)

This range is for moving the vehicle backward. Shift into REVERSE only after the vehicle has come to a complete stop.

NEUTRAL (N)

Use this range when the vehicle is standing for prolonged periods with the engine running. The engine may be started in this range. Apply the parking brake and shift the transmission into PARK if you must exit the vehicle.

WARNING!

Do not coast in NEUTRAL and never turn off the ignition to coast down a hill. These are unsafe practices that limit your response to changing traffic or road conditions. You might lose control of the vehicle and have a collision.

CAUTION!

Towing the vehicle, coasting, or driving for any other reason with the transmission in NEUTRAL can cause severe transmission damage.
Refer to "Recreational Towing" in "Starting And Operating" and "Towing A Disabled Vehicle" in "In Case Of Emergency" for further information.

DRIVE (D)

This range should be used for most city and highway driving. It provides the smoothest upshifts and downshifts, and the best fuel economy. The transmission automatically upshifts through all forward gears. The DRIVE position provides optimum driving characteristics under all normal operating conditions.

When frequent transmission shifting occurs (such as when operating the vehicle under heavy loading conditions, in hilly terrain, traveling into strong head winds, or while towing a heavy trailer), use the AutoStick shift control (refer to "AutoStick" in this section for further information) to select a lower gear. Under these conditions, using a lower gear will improve performance and extend transmission life by reducing excessive shifting and heat buildup.

If the transmission temperature exceeds normal operating limits, the powertrain controller will modify the transmission shift schedule and expand the range of torque converter clutch engagement. This is done to prevent transmission damage due to overheating.

During cold temperatures, transmission operation may be modified depending on engine and transmission temperature as well as vehicle speed. This feature improves warm up time of the engine and transmission to achieve maximum efficiency. Engagement of the torque converter clutch is inhibited until the transmission fluid is warm (refer to the "Note" under "Torque Converter Clutch" in this section). During extremely cold temperatures (-16°F [-27°C] or below), operation may briefly be limited to only second gear (for four-speed transmission) or third gear (for six-speed transmission). Normal operation will resume once the transmission temperature has risen to a suitable level.

Autostick

AutoStick is a driver-interactive transmission feature providing manual shift control, giving you more control of the vehicle. AutoStick allows you to maximize engine braking, eliminate undesirable upshifts and downshifts, and improve overall vehicle performance. This system can also provide you with more control during passing, city driving, cold slippery conditions, mountain driving, trailer towing, and many other situations.

Operation

When the gear selector is in the AutoStick position (below the DRIVE position), it can be moved from side to side. This allows the driver to manually select the transmission gear being used. Moving the gear selector to the left (-) triggers a downshift and to the right (+) an upshift. The current gear will be displayed in the instrument cluster.

In AutoStick mode, the transmission will shift up or down when the driver moves the gear selector to the right (+) or left (-), unless an engine lugging or overspeed condition would result. It will remain in the selected gear until another upshift or downshift is chosen, except as described below.

- The transmission will automatically upshift when necessary to prevent engine over-speed.
- The transmission will automatically downshift as the vehicle slows (to prevent engine lugging) and will display the current gear.
- The transmission will automatically downshift to first gear when coming to a stop. After a stop, the driver should manually upshift (+) the transmission as the vehicle is accelerated.
- You can start out, from a stop, in any gear except top gear. Tapping (+) (at a stop) will allow starting in second gear. Starting out in second gear can be helpful in snowy or icy conditions.
- If a requested downshift would cause the engine to over-speed, that shift will not occur.
- Avoid using speed control when AutoStick is engaged.
- Transmission shifting will be more noticeable when AutoStick is enabled.
- The system may revert to automatic shift mode if a fault or overheat condition is detected.

To disengage AutoStick mode, return the gear selector to the DRIVE position. You can shift in or out of the AutoStick position at any time without taking your foot off the accelerator pedal.

WARNING!

Do not downshift for additional engine braking on a slippery surface. The drive wheels could lose their grip and the vehicle could skid, causing a collision or personal injury.

Transmission Limp Home Mode

Transmission function is monitored electronically for abnormal conditions. If a condition is detected that could result in transmission damage, Transmission Limp Home Mode is activated. In this mode, the transmission remains in second gear (for four-speed transmission) or third gear (for six-speed transmission) regardless of which forward gear is selected. PARK, REVERSE, and NEUTRAL will continue to operate. The Malfunction Indicator Light (MIL) may be illuminated. Limp Home Mode allows the vehicle to be driven to an authorized dealer for service without damaging the transmission.

In the event of a momentary problem, the transmission can be reset to regain all forward gears by performing the following steps:

1. Stop the vehicle.
2. Shift the transmission into PARK.
3. Turn the ignition OFF.
4. Wait approximately 10 seconds.
5. Restart the engine.
6. Shift into the desired gear range. If the problem is no longer detected, the transmission will return to normal operation.

NOTE: Even if the transmission can be reset, we recommend that you visit an authorized dealer at your earliest possible convenience. An authorized dealer has diagnostic equipment to assess the condition of your transmission.

If the transmission cannot be reset, authorized dealer service is required.

Overdrive Operation

The automatic transmission includes an electronically controlled Overdrive (top gear). The transmission will automatically shift into Overdrive if the following conditions are present:

- The gear selector is in the DRIVE position.
- The transmission fluid has reached an adequate temperature.
- The engine coolant has reached an adequate temperature.
- The vehicle speed is sufficiently high.
- The driver is not heavily pressing the accelerator.

Torque Converter Clutch

A feature designed to improve fuel economy has been included in the automatic transmission on your vehicle. A clutch within the torque converter engages automatically at calibrated speeds. This may result in a slightly different feeling or response during normal operation in the upper gears. When the vehicle speed drops or during some accelerations, the clutch automatically disengages.

NOTE: The torque converter clutch will not engage until the transmission fluid and engine coolant are warm (usually after 1 to 3 miles [2 to 5 km] of driving). Because the engine speed is higher when the torque converter clutch is not engaged, it may seem as if the transmission is not shifting into Overdrive when cold. This is normal. Using the AutoStick shift control, when the transmission is sufficiently warm, will demonstrate that the transmission is able to shift into and out of Overdrive.

POWER STEERING

The standard power steering system will give you good vehicle response and increased ease of maneuverability in tight spaces. The system will provide mechanical steering capability if power assist is lost.

If for some reason the power assist is interrupted, it will still be possible to steer your vehicle. Under these conditions, you will observe a substantial increase in steering effort, especially at very low vehicle speeds and during parking maneuvers.

NOTE:

- Increased noise levels at the end of the steering wheel travel are considered normal and do not indicate that there is a problem with the power steering system.
- Upon initial start-up in cold weather, the power steering pump may make noise for a short amount of time. This is due to the cold, thick fluid in the steering system. This noise should be considered normal, and it does not in any way damage the steering system.

CAUTION!

Prolonged operation of the steering system at the end of the steering wheel travel will increase the steering fluid temperature and it should be avoided when possible. Damage to the power steering pump may occur.

Power Steering Fluid Check

Checking the power steering fluid level at a defined service interval is not required. The fluid should only be checked if a leak is suspected, abnormal noises are apparent, and/or the system is not functioning as anticipated. Coordinate inspection efforts through an authorized dealer.

WARNING!

Fluid level should be checked on a level surface and with the engine off to prevent injury from moving parts and to ensure accurate fluid level reading. Do not overfill. Use only manufacturer's recommended power steering fluid.

CAUTION!

Do not use chemical flushes in your power steering system as the chemicals can damage your power steering components. Such damage is not covered by the New Vehicle Limited Warranty.

If necessary, add fluid to restore to the proper indicated level. With a clean cloth, wipe any spilled fluid from all surfaces. Refer to "Fluids And Lubricants" in "Technical Specifications" for the correct fluid type.

ALL WHEEL DRIVE (AWD) — IF EQUIPPED

This feature provides on-demand All-Wheel Drive (AWD). The system is automatic with no driver inputs or additional driving skills required. Under normal driving conditions, the front wheels provide most of the traction. If the front wheels begin to lose traction, power is shifted automatically to the rear wheels. The greater the front wheel traction loss, the greater the power transfer to the rear wheels.

Additionally, on dry pavement under heavy throttle input (where one may have no wheel spin), torque will be sent to the rear in a pre-emptive effort to improve vehicle launch and performance characteristics.

CAUTION!

All wheels must have the same size and type tires. Unequal tire sizes must not be used. Unequal tire size may cause failure of the power transfer unit.

SPEED CONTROL — IF EQUIPPED

When engaged, the Speed Control takes over accelerator operations at speeds greater than 25 mph (40 km/h).

The Speed Control buttons are located on the right side of the steering wheel.

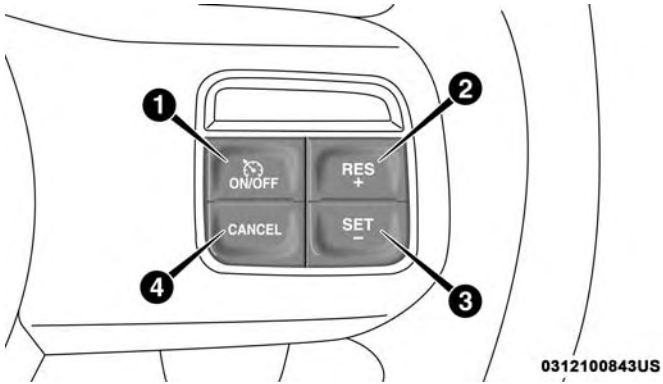

Speed Control Buttons

1 — ON/OFF	3 — SET -
2 — RES +	4 — CANCEL

NOTE: In order to ensure proper operation, the Speed Control System has been designed to shut down if multiple Speed Control functions are operated at the same time. If this occurs, the Speed Control System can be reactivated by pushing the Speed Control ON/OFF button and resetting the desired vehicle set speed.

To Activate

Push the ON/OFF button. The Cruise Indicator Light in the instrument cluster display will illuminate. To turn the system off, push the ON/OFF button a second time. The Cruise Indicator Light will turn off. The system should be turned off when not in use.

WARNING!

Leaving the Speed Control system on when not in use is dangerous. You could accidentally set the system or cause it to go faster than you want. You could lose control and have an accident. Always leave the system off when you are not using it.

To Set A Desired Speed

Turn the Speed Control on. When the vehicle has reached the desired speed, push the SET (-) button and release. Release the accelerator and the vehicle will operate at the selected speed.

NOTE: The vehicle should be traveling at a steady speed and on level ground before pushing the SET (-) button.

To Vary The Speed Setting

To Increase Speed

When the Speed Control is set, you can increase speed by pushing the RES (+) button.

The driver's preferred units can be selected through the instrument panel settings if equipped. Refer to "Getting To Know Your Instrument Panel" for more information. The speed decrement shown is dependant on the chosen speed unit of U.S. (mph) or Metric (km/h):

U.S. Speed (mph)

- Pushing the RES (+) button once will result in a 1 mph increase in set speed. Each subsequent tap of the button results in an increase of 1 mph.
- If the button is continually pushed, the set speed will continue to increase until the button is released, then the new set speed will be established.

Metric Speed (km/h)

- Pushing the RES (+) button once will result in a 1 km/h increase in set speed. Each subsequent tap of the button results in an increase of 1 km/h.
- If the button is continually pushed, the set speed will continue to increase until the button is released, then the new set speed will be established.

To Decrease Speed

When the Speed Control is set, you can decrease speed by pushing the SET (-) button.

The driver's preferred units can be selected through the instrument panel settings if equipped. Refer to "Getting To Know Your Instrument Panel" for more information. The speed decrement shown is dependant on the chosen speed unit of U.S. (mph) or Metric (km/h):

U.S. Speed (mph)

- Pushing the SET (-) button once will result in a 1 mph decrease in set speed. Each subsequent tap of the button results in a decrease of 1 mph.
- If the button is continually pushed, the set speed will continue to decrease until the button is released, then the new set speed will be established.

Metric Speed (km/h)

- Pushing the SET (-) button once will result in a 1 km/h decrease in set speed. Each subsequent tap of the button results in a decrease of 1 km/h.
- If the button is continually pushed, the set speed will continue to decrease until the button is released, then the new set speed will be established.

To Accelerate For Passing

Press the accelerator as you would normally. When the pedal is released, the vehicle will return to the set speed.

Using Speed Control On Hills

The transmission may downshift on hills to maintain the vehicle set speed.

NOTE: The Speed Control system maintains speed up and down hills. A slight speed change on moderate hills is normal.

On steep hills, a greater speed loss or gain may occur so it may be preferable to drive without Speed Control.

WARNING!

Speed Control can be dangerous where the system cannot maintain a constant speed. Your vehicle could go too fast for the conditions, and you could lose control and have an accident. Do not use Speed Control in heavy traffic or on roads that are winding, icy, snow-covered or slippery.

To Resume Speed

To resume a previously set speed, push the RES (+) button and release. Resume can be used at any speed above 20 mph (32 km/h).

To Deactivate

A soft tap on the brake pedal, pushing the CANCEL button, or normal brake pressure while slowing the vehicle will deactivate the Speed Control without erasing the set speed from memory.

Pushing the ON/OFF button or turning the ignition switch OFF erases the set speed from memory.

PARKSENSE REAR PARK ASSIST — IF EQUIPPED

The ParkSense Rear Park Assist system provides visual and audible indications of the distance between the rear fascia and a detected obstacle when backing up, e.g. during a parking maneuver. Refer to "ParkSense System Usage Precautions" in this section for limitations of this system and recommendations.

ParkSense will retain the last system state (enabled or disabled) from the last ignition cycle when the ignition is changed to the ON/RUN position.

ParkSense can be active only when the gear selector is in REVERSE. If ParkSense is enabled at this gear selector position, the system will remain active until the vehicle speed is increased to approximately 7 mph (11 km/h) or above. The system will become active again if the vehicle speed is decreased to speeds less than approximately 6 mph (9 km/h).

ParkSense Sensors

The four ParkSense sensors, located in the rear fascia/bumper, monitor the area behind the vehicle that is within the sensors' field of view. The sensors can detect obstacles from approximately 12 inches (30 cm) up to 79 inches (200 cm) from the rear fascia/bumper in the horizontal direction, depending on the location, type and orientation of the obstacle.

ParkSense Warning Display

The ParkSense Warning screen will only be displayed if "Sound and Display" is selected from the Uconnect System. Refer to "Uconnect Settings" in "Multimedia" for further information.

The ParkSense Warning screen is located within the instrument cluster display. It provides visual warnings to indicate the distance between the rear fascia/bumper and the detected obstacle. Refer to "Instrument Cluster Display" in "Getting To Know Your Instrument Panel" for further information.

ParkSense Display

When the vehicle is in REVERSE, the warning display will turn on indicating the system status.

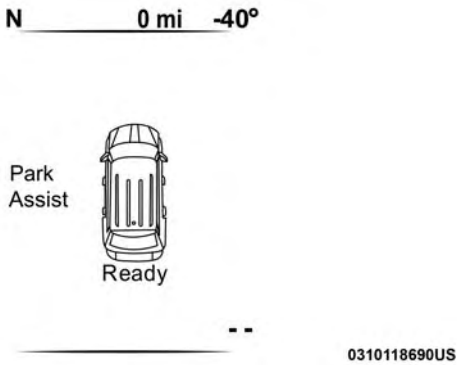

Park Assist Ready

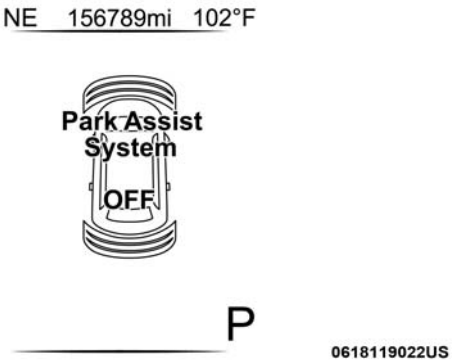

Park Assist System Off

The system will indicate a detected obstacle by showing three solid arcs and will produce a one-half second tone. As the vehicle moves closer to the obstacle, the instrument cluster display will show fewer arcs and the sound tone will change from slow, to fast, to continuous.

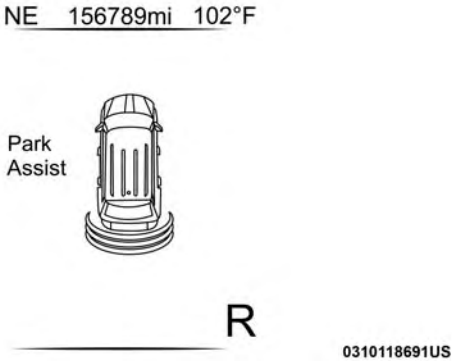

Slow Tone

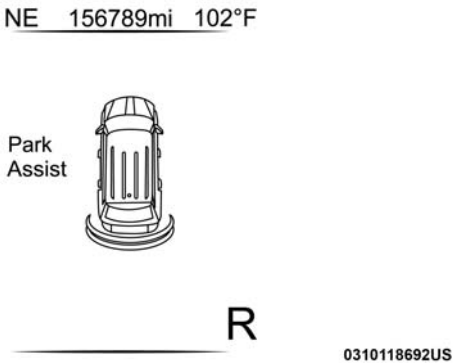

Fast Tone

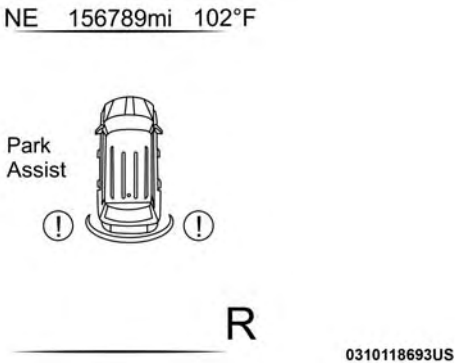

Continuous Tone

The vehicle is close to the obstacle when the warning display shows one flashing arc and sounds a continuous tone. The following chart shows the warning alert operation when the system is detecting an obstacle:

WARNING ALERTS					
Rear Distance (inches/cm)	Greater than 79 inches (200 cm)	79-39 inches (200-100 cm)	39-25 inches (100-65 cm)	25-12 inches (65-30 cm)	Less than 12 inches (30 cm)
Audible Alert Chime	None	Single 1/2-Second Tone	Slow	Fast	Continuous
Arcs	None	3 Solid (Continuous)	3 Slow Flashing	2 Slow Flashing	1 Slow Flashing

Enabling And Disabling ParkSense

ParkSense can be enabled and disabled using the Uconnect System. The available choices are: Off, Sound Only, or Sound and Display. Refer to “Uconnect Settings” in “Multimedia” for further information.

When the ParkSense button is pushed to disable the system, the instrument cluster display will show the “PARK ASSIST SYSTEM OFF” message for approximately five seconds. Refer to “Instrument Cluster Display” in “Getting To Know Your Instrument Panel” for further information. When the gear selector is moved to REVERSE and the system is disabled, the instrument cluster display will show the “PARK ASSIST SYSTEM OFF” message for as long as the vehicle is in REVERSE.

Service The ParkSense Rear Park Assist System

During vehicle start up, when the ParkSense Rear Park Assist system has detected a fault condition, the instrument cluster display will actuate a single chime, once per ignition cycle, and it will display the “CLEAN PARK ASSIST”, “SERVICE PARK ASSIST”, or “SERVICE PARK ASSIST SYSTEM” message. Refer to “Instrument Cluster Display” in “Getting To Know Your Instrument Panel” for further information. When the gear selector is moved to REVERSE and the system has detected a fault condition, the instrument cluster display will show the ″CLEAN PARK ASSIST″, ″SERVICE PARK ASSIST″, OR ″SERVICE PARK ASSIST SYSTEM″ messages for as long as the vehicle is in REVERSE. Under this condition, ParkSense will not operate.

If "CLEAN PARK ASSIST" appears in the instrument cluster display, make sure the outer surface and the underside of the rear fascia/bumper are clean and clear of snow, ice, mud, dirt or other obstruction. Then, cycle the ignition. If the message continues to appear, see an authorized dealer.

If "SERVICE PARK ASSIST" or "SERVICE PARK ASSIST SYSTEM" appears in the instrument cluster display, see an authorized dealer.

Cleaning The ParkSense System

Clean the ParkSense sensors with water, car wash soap and a soft cloth. Do not use rough or hard cloths. Do not scratch or poke the sensors. Otherwise, you could damage the sensors.

ParkSense System Usage Precautions

NOTE:

- Ensure that the rear bumper is free of snow, ice, mud, dirt and debris to keep the ParkSense system operating properly.
- Jackhammers, large trucks, and other vibrations could affect the performance of ParkSense.
- When you turn ParkSense off, the instrument cluster display will read "PARK ASSIST SYSTEM OFF." Furthermore, once you turn ParkSense off, it remains off until you turn it on again, even if you cycle the ignition key.
- When you move the gear selector to the REVERSE position and ParkSense is turned off, the instrument cluster display will show the "PARK ASSIST SYSTEM OFF" message for as long as the vehicle is in REVERSE.
- Clean the ParkSense sensors regularly, taking care not to scratch or damage them. The sensors must not be covered with ice, snow, slush, mud, dirt or debris. Failure to do so can result in the system not working properly. The ParkSense system might not detect an obstacle behind the fascia/bumper, or it could provide a false indication that an obstacle is behind the fascia/bumper.
- Ensure the ParkSense system is OFF if objects such as bicycle carriers, trailer hitches, etc., are placed within 12 inches (30 cm) from the rear fascia/bumper. Failure to do so can result in the system misinterpreting a close object as a sensor problem, causing the "SERVICE PARK ASSIST SYSTEM" message to appear in the instrument cluster display.

WARNING!

- **Drivers must be careful when backing up even when using ParkSense. Always check carefully behind your vehicle, look behind you, and be sure to check for pedestrians, animals, other vehicles, obstructions, and blind spots before backing up. You are responsible for safety and must continue to pay attention to your surroundings. Failure to do so can result in serious injury or death.**
- **Before using ParkSense, it is strongly recommended that the ball mount and hitch ball assembly is disconnected from the vehicle when the vehicle is not used for towing. Failure to do so can result in injury or damage to vehicles or obstacles because the hitch ball will be much closer to the obstacle than the rear fascia when the loudspeaker sounds the continuous tone. Also, the sensors could detect the ball mount and hitch ball assembly, depending on its size and shape, giving a false indication that an obstacle is behind the vehicle.**

CAUTION!

- **ParkSense is only a parking aid and it is unable to recognize every obstacle, including small obstacles. Parking curbs might be temporarily detected or not detected at all. Obstacles located above or below the sensors will not be detected when they are in close proximity.**
- **The vehicle must be driven slowly when using ParkSense in order to be able to stop in time when an obstacle is detected. It is recommended that the driver looks over his/her shoulder when using ParkSense.**

PARKVIEW REAR BACK UP CAMERA — IF EQUIPPED

Your vehicle may be equipped with the ParkView Rear Back Up Camera that allows you to see an on-screen image of the rear surroundings of your vehicle whenever the gear selector is put into REVERSE. The image will be displayed in the touchscreen display along with a caution note to “CHECK ENTIRE SURROUNDINGS” across the top of the screen. After five seconds this note will disappear. The ParkView camera is located on the rear of the vehicle above the rear license plate.

When the vehicle is shifted out of REVERSE, the rear camera mode is exited and the last selected touchscreen appears again.

The camera image is also available in the rearview mirror if the touchscreen display is unavailable.

If your vehicle is equipped with the Camera Delay feature and it is turned on, the rear camera image will be displayed for up to 10 seconds when the vehicle is shifted out of REVERSE unless the forward vehicle speed exceeds 8 mph (13 km/h), the transmission is shifted into PARK, the X button on the camera display screen is pressed, or the vehicle's ignition is cycled to the OFF position.

Static grid lines will illustrate the width of the vehicle while a dashed center-line will indicate the center of the vehicle to assist with parking or aligning to a hitch/receiver. The static grid lines will show separate zones that will help indicate the distance to the rear of the vehicle.

NOTE: The ParkView Rear Back Up Camera has programmable modes of operation that may be selected through the Uconnect System. Refer to "Uconnect Settings" in "Multimedia" for further information.

Different colored zones indicate the distance to the rear of the vehicle.

The following table shows the approximate distances for each zone:

Zone	Distance To The Rear Of The Vehicle
Red	0 - 1 ft (0 - 30 cm)
Yellow	1 ft - 3 ft (30 cm - 1 m)
Green	3 ft or greater (1 m or greater)

WARNING!

Drivers must be careful when backing up even when using the ParkView Rear Back Up Camera. Always check carefully behind your vehicle, and be sure to check for pedestrians, animals, other vehicles, obstructions, or blind spots before backing up. You are responsible for the safety of your surroundings and must continue to pay attention while backing up. Failure to do so can result in serious injury or death.

CAUTION!

- **To avoid vehicle damage, ParkView should only be used as a parking aid. The ParkView camera is unable to view every obstacle or object in your drive path.**
- **To avoid vehicle damage, the vehicle must be driven slowly when using ParkView to be able to stop in time when an obstacle is seen. It is recommended that the driver look frequently over his/her shoulder when using ParkView.**

NOTE: If snow, ice, mud, or any foreign substance builds up on the camera lens, clean the lens, rinse with water, and dry with a soft cloth. Do not cover the lens.

REFUELING THE VEHICLE

The gas cap is located behind the fuel filler door on the left side of the vehicle. If the gas cap is lost or damaged, be sure the replacement cap has been designed for use with this vehicle.

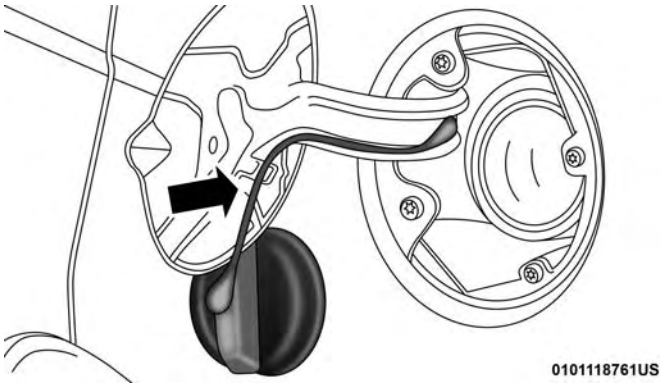

Fuel Filler Cap (Gas Cap)

NOTE: When removing the fuel filler cap, lay the cap tether in the hook, located on the fuel filler door reinforcement.

WARNING!

- **Never have any smoking materials lit in or near the vehicle when the gas cap is removed or the tank is being filled.**
- **Never add fuel to the vehicle when the engine is running.**
- **A fire may result if gasoline is pumped into a portable container that is inside of a vehicle. You could be burned. Always place gas containers on the ground while filling.**
- **Failure to follow this warning may result in serious injury or death.**

CAUTION!

- **Damage to the fuel system or emissions control system could result from using an improper fuel tank filler tube cap.**
- **A poorly fitting fuel filler cap could let impurities into the fuel system.**
- **A poorly fitting fuel filler cap may cause the "Malfunction Indicator Light (MIL)" to turn on.**

(Continued)

CAUTION! ***(Continued)***

- **To avoid fuel spillage and overfilling, do not "top off" the fuel tank after filling. When the fuel nozzle "clicks" or shuts off, the fuel tank is full.**

NOTE:

- When the fuel nozzle "clicks" or shuts off, the fuel tank is full.
- Tighten the gas cap until you hear a "clicking" sound. This is an indication that the gas cap is tightened properly. The MIL in the instrument cluster may turn on if the gas cap is not secured properly. Make sure that the gas cap is tightened each time the vehicle is refueled.

Loose Fuel Filler Cap Message

If the vehicle diagnostic system determines that the fuel filler cap is loose, improperly installed, or damaged, a "gASCAP" message will display in the odometer or a "Check Gascap" message will display in the instrument cluster. If this occurs, tighten the fuel filler cap properly and press the Trip Odometer button to turn off the message. If the problem continues, the message will appear the next time the vehicle is started.

A loose, improperly installed, or damaged fuel filler cap may also turn on the MIL.

VEHICLE LOADING

The load carrying capacity of your vehicle is shown on the "Vehicle Certification Label". This information should be used for passenger and luggage loading as indicated.

Do not exceed the specified Gross Vehicle Weight Rating (GVWR) or the Gross Axle Weight Rating (GAWR).

Vehicle Certification Label

Your vehicle has a Vehicle Certification Label affixed to the drivers side B-Pillar or the rear of the driver's door.

The label contains the following information:

- Name of manufacturer
- Month and year of manufacture
- Gross Vehicle Weight Rating (GVWR)
- Gross Axle Weight Rating (GAWR) front
- Gross Axle Weight Rating (GAWR) rear
- Vehicle Identification Number (VIN)
- Type of vehicle
- Month, Day, and Hour of manufacture (MDH)

The bar code allows a computer scanner to read the VIN.

Gross Vehicle Weight Rating (GVWR)

The GVWR is the total allowable weight of your vehicle. This includes driver, passengers, and cargo. The total load must be limited so that you do not exceed the GVWR.

Gross Axle Weight Rating (GAWR)

The GAWR is the maximum capacity of the front and rear axles. Distribute the load over the front and rear axles evenly. Make sure that you do not exceed either front or rear GAWR.

WARNING!

Because the front wheels steer the vehicle, it is important that you do not exceed the maximum front or rear GAWR. A dangerous driving condition can result if either rating is exceeded. You could lose control of the vehicle and have a collision.

Overloading

The load carrying components (axle, springs, tires, wheels, etc.) of your vehicle will provide satisfactory service as long as you do not exceed the GVWR and the front and rear GAWR.

The best way to figure out the total weight of your vehicle is to weigh it when it is fully loaded and ready for operation. Weigh it on a commercial scale to ensure that it is not over the GVWR.

Figure out the weight on the front and rear of the vehicle separately. It is important that you distribute the load evenly over the front and rear axles.

Overloading can cause potential safety hazards and shorten useful service life. Heavier axles or suspension components do not necessarily increase the vehicle's GVWR.

Loading

To load your vehicle properly, first figure out its empty weight, axle-by-axle and side-by-side. Store heavier items down low and be sure you distribute their weight as evenly as possible. Stow all loose items securely before driving. If weighing the loaded vehicle shows that you have exceeded either GAWR, but the total load is within the specified GVWR, you must redistribute the weight. Improper weight distribution can have an adverse effect on the way your vehicle steers and handles and the way the brakes operate.

TRAILER TOWING

In this section you will find safety tips and information on limits to the type of towing you can reasonably do with your vehicle. Before towing a trailer, carefully review this information to tow your load as efficiently and safely as possible.

To maintain the New Vehicle Limited Warranty coverage, follow the requirements and recommendations in this manual concerning vehicles used for trailer towing.

Common Towing Definitions

The following trailer towing related definitions will assist you in understanding the following information:

Gross Vehicle Weight Rating (GVWR)

The GVWR is the total allowable weight of your vehicle. This includes driver, passengers, cargo and tongue weight. The total load must be limited so that you do not exceed the GVWR. Refer to "Vehicle Loading/Vehicle Certification Label" in "Starting And Operating" for further information.

Gross Trailer Weight (GTW)

The GTW is the weight of the trailer plus the weight of all cargo, consumables, and equipment (permanent or temporary) loaded in or on the trailer in its "loaded and ready for operation" condition.

The recommended way to measure GTW is to put your fully loaded trailer on a vehicle scale. The entire weight of the trailer must be supported by the scale.

Gross Combination Weight Rating (GCWR)

The GCWR is the total allowable weight of your vehicle and trailer when weighed in combination.

Gross Axle Weight Rating (GAWR)

The GAWR is the maximum capacity of the front and rear axles. Distribute the load over the front and rear axles evenly. Make sure that you do not exceed either front or rear GAWR. Refer to "Vehicle Loading/Vehicle Certification Label" in "Starting And Operating" for further information.

WARNING!

It is important that you do not exceed the maximum front or rear GAWR. A dangerous driving condition can result if either rating is exceeded. You could lose control of the vehicle and have a collision.

Tongue Weight (TW)

The tongue weight is the downward force exerted on the hitch ball by the trailer. You must consider this as part of the load on your vehicle.

Trailer Frontal Area

The frontal area is the maximum height multiplied by the maximum width of the front of a trailer.

Trailer Sway Control — Electronic

Refer to "Safety Features/Trailer Sway Control (TSC)" in "Safety" for further information.

Trailer Sway Control — Mechanical

The trailer sway control is a telescoping link that can be installed between the hitch receiver and the trailer tongue that typically provides adjustable friction associated with the telescoping motion to dampen any unwanted trailer swaying motions while traveling.

Weight-Carrying Hitch

A weight-carrying hitch supports the trailer tongue weight, just as if it were luggage located at a hitch ball or some other connecting point of the vehicle. These kinds of hitches are the most popular on the market today and they are commonly used to tow small and medium sized trailers.

Weight-Distributing Hitch

A weight-distributing system works by applying leverage through spring (load) bars. They are typically used for heavier loads to distribute trailer tongue weight to the tow vehicle's front axle and the trailer axle(s). When used in accordance with the manufacturer's directions, it provides for a more level ride, offering more consistent steering and brake control thereby enhancing towing safety. The addition of a friction/hydraulic sway control also dampens sway caused by traffic and crosswinds and contributes positively to tow vehicle and trailer stability. Trailer sway control and a weight distributing (load equalizing) hitch are recommended for heavier Tongue Weights (TW) and may be required depending on vehicle and trailer configuration/loading to comply with Gross Axle Weight Rating (GAWR) requirements.

WARNING!

- **An improperly adjusted Weight Distributing Hitch system may reduce handling, stability, braking performance, and could result in a collision.**
- **Weight Distributing Systems may not be compatible with Surge Brake Couplers. Consult with your hitch and trailer manufacturer or a reputable Recreational Vehicle dealer for additional information.**

Trailer Hitch Classification

The following chart provides the industry standard for the maximum trailer weight a given trailer hitch class can tow and should be used to assist you in selecting the correct trailer hitch for your intended towing condition.

Trailer Hitch Classification Definitions	
Class	**Max. Trailer Hitch Industry Standards**
Class I - Light Duty	2,000 lbs (907 kg)
Class II - Medium Duty	3,500 lbs (1,587 kg)
Class III - Heavy Duty	5,000 lbs (2,267 kg)
Class IV - Extra Heavy Duty	10,000 lbs (4,535 kg)
Refer to the "Trailer Towing Weights (Maximum Trailer Weight Ratings)" chart for the Maximum Gross Trailer Weight (GTW) towable for your given drivetrain.	
All trailer hitches should be professionally installed on your vehicle.	

Trailer Towing Weights (Maximum Trailer Weight Ratings)

The following chart provides the maximum trailer weight ratings towable for your given drivetrain:

Engine/Transmission	GCWR (Gross Combined Wt. Rating)	Frontal Area	Max. GTW (Gross Trailer Wt.)	Max. Tongue Wt.
2.4L/Automatic	6,000 lbs (2,721 kg)	22 sq ft (2.0 sq m)	1,000 lbs (453 kg) which includes up to 5 persons & Luggage	100 lbs (45 kg)

Engine/Transmission	GCWR (Gross Combined Wt. Rating)	Frontal Area	Max. GTW (Gross Trailer Wt.)	Max. Tongue Wt.
3.6L/Automatic	7,300 lbs (3,311 kg)	32 sq ft (3.0 sq m)	2,500 lbs (1,133 kg) which includes 1 to 2 persons & Luggage	200 lbs (90 kg)
	7,300 lbs (3,311 kg)	32 sq ft (3.0 sq m)	2,000 lbs (907 kg) which includes 3 to 4 persons & Luggage	150 lbs (68 kg)
	7,300 lbs (3,311 kg)	32 sq ft (3.0 sq m)	1,500 lbs (680 kg) which includes 5 to 7 persons & Luggage	100 lbs (45 kg) * Except for AWD models

NOTE:

- The trailer tongue weight must be considered as part of the combined weight of occupants and cargo, and should never exceed the weight referenced on the Tire and Loading Information placard. Refer to “Tires” in “Servicing And Maintenance” for further information.
- * For All Wheel Drive (AWD) models carrying five to seven persons and luggage will exceed the rear Gross Axle Weight Rating (GAWR) and therefore should not be attempted.

Trailer And Tongue Weight

Never exceed the maximum tongue weight stamped on your bumper or trailer hitch.

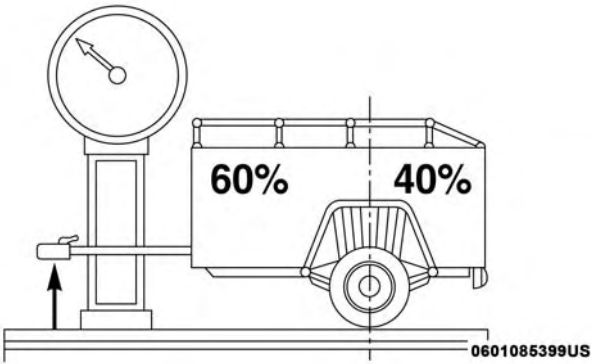

Weight Distribution

Consider the following items when computing the weight on the rear axle of the vehicle:

- The tongue weight of the trailer.
- The weight of any other type of cargo or equipment put in or on your vehicle.
- The weight of the driver and all passengers.

NOTE: Remember that everything put into or on the trailer adds to the load on your vehicle. Also, additional factory-installed options or dealer-installed options must be considered as part of the total load on your vehicle. Refer to the "Tire And Loading Information" placard for the maximum combined weight of occupants and cargo for your vehicle.

Towing Requirements

To promote proper break-in of your new vehicle drivetrain components the following guidelines are recommended:

6

WARNING!

Improper towing can lead to a collision. Follow these guidelines to make your trailer towing as safe as possible:

- **Make certain that the load is secured in the trailer and that it will not shift during travel. When trailering cargo that is not fully secured, dynamic load shifts can occur that may be difficult for the driver to control. You could lose control of your vehicle and have a collision.**

(Continued)

WARNING! *(Continued)*

- **When hauling cargo or towing a trailer, do not overload your vehicle or trailer. Overloading can cause a loss of control, poor performance, or damage to brakes, axle, engine, transmission, steering, suspension, chassis structure, or tires.**
- **Safety chains must always be used between your vehicle and trailer. Always connect the chains to the frame or hook retainers of the vehicle hitch. Cross the chains under the trailer tongue and allow enough slack for turning corners.**
- **Vehicles with trailers should not be parked on a grade. When parking, apply the parking brake on the tow vehicle. Put the tow vehicle automatic transmission in PARK. Always block or "chock" the trailer wheels.**
- **GCWR must not be exceeded.**
- **Total weight must be distributed between the tow vehicle and the trailer such that the following four ratings are not exceeded:**

  1. GVWR

  2. GTW

(Continued)

WARNING! *(Continued)*

3. GAWR

4. Tongue weight rating for the trailer hitch utilized.

Perform the maintenance listed in the "Maintenance Plan". Refer to "Scheduled Servicing" in "Servicing And Maintenance" for further information. When towing a trailer, never exceed the GAWR, or GCWR, ratings.

CAUTION!

- **Do not tow a trailer at all during the first 500 miles (805 km) the new vehicle is driven. The engine, axle or other parts could be damaged.**
- **Then, during the first 500 miles (805 km) that a trailer is towed, do not drive over 50 mph (80 km/h) and do not make starts at full throttle. This helps the engine and other parts of the vehicle wear in at the heavier loads.**

Towing Requirements — Tires

- Do not attempt to tow a trailer while using a compact spare tire.

- Proper tire inflation pressures are essential to the safe and satisfactory operation of your vehicle. Refer to "Tires" in "Servicing And Maintenance" for proper tire inflation procedures.
- Check the trailer tires for proper tire inflation pressures before trailer usage.
- Check for signs of tire wear or visible tire damage before towing a trailer. Refer to "Tires" in "Servicing And Maintenance" for the proper inspection procedure.
- When replacing tires, refer to "Tires" in "Servicing And Maintenance" for the proper tire replacement procedures. Replacing tires with a higher load carrying capacity will not increase the vehicle's GVWR and GAWR limits.

Towing Requirements — Trailer Brakes

- Do **not** interconnect the hydraulic brake system or vacuum system of your vehicle with that of the trailer. This could cause inadequate braking and possible personal injury.
- An electronically actuated trailer brake controller is required when towing a trailer with electronically actuated brakes. When towing a trailer equipped with a hydraulic surge actuated brake system, an electronic brake controller is not required.
- Trailer brakes are recommended for trailers over 1,000 lbs (453 kg) and required for trailers in excess of 2,000 lbs (907 kg).

WARNING!

- **Do not connect trailer brakes to your vehicle's hydraulic brake lines. It can overload your brake system and cause it to fail. You might not have brakes when you need them and could have a collision.**
- **Towing any trailer will increase your stopping distance. When towing you should allow for additional space between your vehicle and the vehicle in front of you. Failure to do so could result in a collision.**

CAUTION!

If the trailer weighs more than 1,000 lbs (453 kg) loaded, it should have its own brakes and they should be of adequate capacity. Failure to do this could lead to accelerated brake lining wear, higher brake pedal effort, and longer stopping distances.

Towing Requirements — Trailer Lights And Wiring

Whenever you pull a trailer, regardless of the trailer size, stoplights and turn signals on the trailer are required for motoring safety.

The Trailer Tow Package may include a four- and seven-pin wiring harness. Use a factory approved trailer harness and connector.

NOTE: Do not cut or splice wiring into the vehicle's wiring harness.

The electrical connections are all complete to the vehicle but you must mate the harness to a trailer connector. Refer to the following illustrations.

NOTE:

- Disconnect trailer wiring connector from the vehicle before launching a boat (or any other device plugged into vehicle's electrical connect) into water.
- Be sure to reconnect after clear from water area.

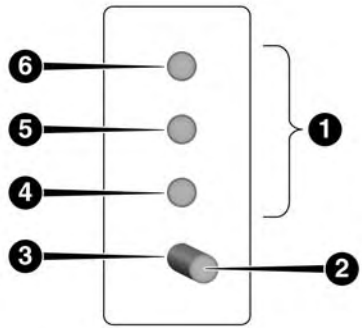

0601085400US

Four-Pin Connector

1 — Female Pins	4 — Park
2 — Male Pin	5 — Left Stop/Turn
3 — Ground	6 — Right Stop/Turn

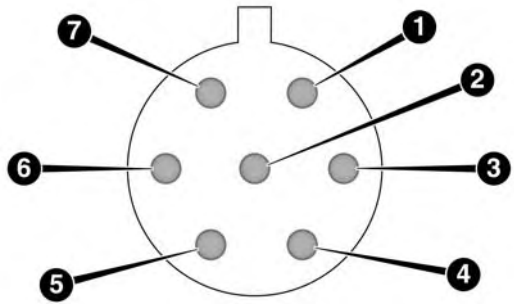

0601085401US

Seven-Pin Connector

1 — Battery
2 — Backup Lamps
3 — Right Stop/Turn
4 — Electric Brakes
5 — Ground
6 — Left Stop/Turn
7 — Running Lamps

Towing Tips

Before setting out on a trip, practice turning, stopping, and backing up the trailer in an area located away from heavy traffic.

Automatic Transmission

The DRIVE range can be selected when towing. However, if frequent shifting occurs while in DRIVE, use the AutoStick shift control to manually select a lower gear.

NOTE: Using a lower gear while operating the vehicle under heavy loading conditions will improve performance and extend transmission life by reducing excessive shifting and heat build up. This action will also provide better engine braking.

If you REGULARLY tow a trailer for more than 45 minutes of continuous operation, then change the transmission fluid and filter as specified for “police, taxi, fleet, or frequent trailer towing”. Refer to the “Scheduled Servicing” in “Servicing And Maintenance” for the proper maintenance intervals.

NOTE: Check the four-speed automatic transmission fluid level before towing. The six-speed transmission does not require a fluid level check before towing. If, however, you notice fluid leakage or transmission malfunction, see your authorized dealer immediately for assistance.

Speed Control — If Equipped

- Do not use on hilly terrain or with heavy loads.
- When using the speed control, if you experience speed drops greater than 10 mph (16 km/h), disengage until you can get back to cruising speed.
- Use speed control in flat terrain and with light loads to maximize fuel efficiency.

AutoStick

- When using the AutoStick shift control, select the highest gear that allows for adequate performance and avoids frequent downshifts. For example, choose “4” if the desired speed can be maintained. Choose “3” or “2” if needed to maintain the desired speed.
- To prevent excess heat generation, avoid continuous driving at high RPM. Reduce vehicle speed as necessary to avoid extended driving at high RPM. Return to a higher gear or vehicle speed when grade and road conditions allow.

Cooling System

To reduce potential for engine and transmission overheating, take the following actions:

- **City Driving**
- In city traffic — while stopped, place the transmission in NEUTRAL, but do not increase engine idle speed.
- **Highway Driving**
- Reduce speed.
- **Air Conditioning**
- Turn off temporarily.

RECREATIONAL TOWING (BEHIND MOTORHOME, ETC.)

Towing This Vehicle Behind Another Vehicle

Towing Condition	Wheel OFF the Ground	FWD Models	AWD Models
Flat Tow	NONE	**NOT ALLOWED**	**NOT ALLOWED**
Dolly Tow	Front	OK	**NOT ALLOWED**
	Rear	**NOT ALLOWED**	**NOT ALLOWED**
On Trailer	ALL	OK	OK
NOTE: When towing your vehicle, always follow applicable state and provincial laws. Contact state and provincial Highway Safety offices for additional details.			

Recreational Towing

Front-Wheel Drive (FWD) Models

Recreational towing is allowed **ONLY** if the front wheels are **OFF** the ground. This may be accomplished using a tow dolly or vehicle trailer. If using a tow dolly, follow this procedure:

1. Properly secure the dolly to the tow vehicle, following the dolly manufacturer's instructions.
2. Drive the front wheels onto the tow dolly.
3. Firmly apply the parking brake. Place the transmission in PARK.
4. Properly secure the front wheels to the dolly, following the dolly manufacturer's instructions.
5. Release the parking brake.

CAUTION!

- **DO NOT flat tow this vehicle. Damage to the drivetrain will result. If this vehicle requires towing, make sure the drive wheels are OFF the ground.**
- **Towing this vehicle in violation of the above requirements can cause severe transmission damage. Damage from improper towing is not covered under the New Vehicle Limited Warranty.**

All-Wheel Drive (AWD) Models

Recreational towing (with all four wheels on the ground, or using a towing dolly) is **NOT ALLOWED**. The only acceptable method for towing this vehicle (behind another vehicle) is on a vehicle trailer with all four wheels **OFF** the ground.

CAUTION!

Towing this vehicle with ANY of its wheels on the ground can cause severe transmission and/or power transfer unit damage. Damage from improper towing is not covered under the New Vehicle Limited Warranty.

DRIVING TIPS

Driving On Slippery Surfaces

Acceleration

Rapid acceleration on snow covered, wet, or other slippery surfaces may cause the driving wheels to pull erratically to the right or left. This phenomenon occurs when there is a difference in the surface traction under the front (driving) wheels.

WARNING!

Rapid acceleration on slippery surfaces is dangerous. Unequal traction can cause sudden pulling of the front wheels. You could lose control of the vehicle and possibly have a collision. Accelerate slowly and carefully whenever there is likely to be poor traction (ice, snow, wet, mud, loose sand, etc.).

Traction

When driving on wet or slushy roads, it is possible for a wedge of water to build up between the tire and road surface. This is hydroplaning and may cause partial or complete loss of vehicle control and stopping ability. To reduce this possibility, the following precautions should be observed:

- Slow down during rainstorms or when the roads are slushy.
- Slow down if the road has standing water or puddles.
- Replace the tires when tread wear indicators first become visible.
- Keep tires properly inflated.
- Maintain sufficient distance between your vehicle and the vehicle in front of you to avoid a collision in a sudden stop.

Driving Through Water

Driving through water more than a few inches/centimeters deep will require extra caution to ensure safety and prevent damage to your vehicle.

Flowing/Rising Water

WARNING!

Do not drive on or across a road or path where water is flowing and/or rising (as in storm run-off). Flowing water can wear away the road or path's surface and cause your vehicle to sink into deeper water. Furthermore, flowing and/or rising water can carry your vehicle away swiftly. Failure to follow this warning may result in injuries that are serious or fatal to you, your passengers, and others around you.

Shallow Standing Water

Although your vehicle is capable of driving through shallow standing water, consider the following Cautions and Warnings before doing so.

WARNING!

- **Driving through standing water limits your vehicle's traction capabilities. Do not exceed 5 mph (8 km/h) when driving through standing water.**
- **Driving through standing water limits your vehicle's braking capabilities, which increases stopping distances. Therefore, after driving through standing water, drive slowly and lightly press on the brake pedal several times to dry the brakes.**
- **Failure to follow these warnings may result in injuries that are serious or fatal to you, your passengers, and others around you.**

CAUTION!

- **Always check the depth of the standing water before driving through it. Never drive through standing water that is deeper than the bottom of the tire rims mounted on the vehicle.**
- **Determine the condition of the road or the path that is under water and if there are any obstacles in the way before driving through the standing water.**

(Continued)

CAUTION! ***(Continued)***

- **Do not exceed 5 mph (8 km/h) when driving through standing water. This will minimize wave effects.**
- **Driving through standing water may cause damage to your vehicle's drivetrain components. Always inspect your vehicle's fluids (i.e., engine oil, transmission, axle, etc.) for signs of contamination (i.e., fluid that is milky or foamy in appearance) after driving through standing water. Do not continue to operate the vehicle if any fluid appears contaminated, as this may result in further damage. Such damage is not covered by the New Vehicle Limited Warranty.**
- **Getting water inside your vehicle's engine can cause it to lock up and stall out, and cause serious internal damage to the engine. Such damage is not covered by the New Vehicle Limited Warranty.**

IN CASE OF EMERGENCY

CONTENTS

- HAZARD WARNING FLASHERS 280
- BULB REPLACEMENT 280
  - Replacement Bulbs 280
  - Replacing Exterior Bulbs 282
- FUSES 285
  - Interior Fuses 286
  - Underhood Fuses (Power Distribution Center) . .288
- JACKING AND TIRE CHANGING 291
  - Jack Location 292
  - Spare Tire Location And Removal 292
  - Preparations For Jacking 293
  - Jacking Instructions 294
  - Road Tire Installation 299
  - Spare Tire Stowage. 301
- JUMP STARTING 302
  - Preparations For Jump Start 302
  - Jump Starting Procedure. 303
- IF YOUR ENGINE OVERHEATS 305
  - 2.4L Engine — If Equipped 306
- GEAR SELECTOR OVERRIDE 306
- FREEING A STUCK VEHICLE 307
- TOWING A DISABLED VEHICLE 308
  - All-Wheel Drive (AWD) Models 309
  - Front-Wheel Drive (FWD) Models 309
- ENHANCED ACCIDENT RESPONSE SYSTEM (EARS) 310
- EVENT DATA RECORDER (EDR) 310

HAZARD WARNING FLASHERS

The Hazard Warning flasher switch is located on the switch bank just above the climate controls.

Push the switch to turn on the Hazard Warning flasher. When the switch is activated, all directional turn signals will flash on and off to warn oncoming traffic of an emergency. Push the switch a second time to turn off the Hazard Warning flashers.

This is an emergency warning system and it should not be used when the vehicle is in motion. Use it when your vehicle is disabled and it is creating a safety hazard for other motorists.

When you must leave the vehicle to seek assistance, the Hazard Warning flashers will continue to operate even though the ignition is placed in the OFF position.

NOTE: With extended use, the Hazard Warning flashers may discharge the battery.

BULB REPLACEMENT

Replacement Bulbs

Interior Bulbs

	Bulb Number
Courtesy/Reading Lamps (Incandescent)	578
Courtesy/Reading Lamps (Optional LED)	LED (Serviced at authorized dealer)
Glove Compartment Lamp	194
Cargo Lamp	579
Optional Door Map Pocket/Cupholder	LED (Serviced at authorized dealer)
For lighted switches, see your authorized dealer for replacement instructions.	

Exterior Bulbs

	Bulb Number
Low Beam Headlamp	9006
High Beam Headlamp	9005
Front Park/Turn Signal	3757AK
Side Marker Lamp	168
Front Fog Lamp	PSX24W or 2504
Center High Mounted Stop Lamp (CHMSL)	LED (Serviced at authorized dealer)
License Lamp	168

Exterior Bulbs – Rear (LED Version)

	Bulb Number
Rear Tail/Stop Lamp	LED (Serviced at authorized dealer)
Rear Tail (Liftgate) Lamp	LED (Serviced at authorized dealer)
Rear Turn Signal Lamp	WY21W or 7440A
Backup Lamp	W21W or 7440

Exterior Bulbs – Rear (Bulb Version)

	Bulb Number
Rear Tail/Stop/Turn Signal Lamp	P27/7W or 3157
Rear Tail (Liftgate) Lamp	P27/7W or 3157
Backup Lamp	P27/7W or 3157

Replacing Exterior Bulbs

NOTE: Lens fogging can occur under certain atmospheric conditions. This will usually clear as atmospheric conditions change to allow the condensation to change back into a vapor. Turning the lamps on will usually accelerate the clearing process.

Front Low/High Beam Headlamp, Turn Signal/Park Lamp, And Side Marker Lamp

1. Open the hood.

NOTE: It may be necessary to remove the air cleaner filter housing and position the Totally Integrated Power Module (TIPM) aside to replace certain lamps in the left headlamp housing.

2. Rotate the applicable bulb and connector assembly ¼ turn counterclockwise and remove the assembly from the headlamp housing.

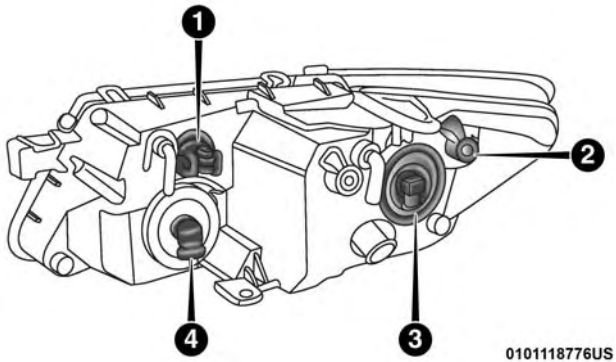

Headlamp Housing

1 — Front Turn Signal/Park Lamp Bulb
2 — Side Marker Lamp Bulb
3 — Low Beam Headlamp Bulb
4 — High Beam Headlamp Bulb

3. Disconnect the bulb from the harness connector and then connect the replacement bulb.

CAUTION!

Do not touch the new bulb with your fingers. Oil contamination will severely shorten bulb life. If the bulb comes in contact with any oily surface, clean the bulb with rubbing alcohol.

4. Install the bulb and connector assembly into the headlamp housing and rotate it ¼ turn clockwise to lock it in place.

Front Fog Lamp

NOTE: Turn the steering wheel to the right if replacing the left front fog lamp or to the left if replacing the right front fog lamp to allow for easier access to the front of the wheel well.

1. Remove the fasteners retaining the front lower wheel well access panel and remove the access panel.
2. Remove the electrical connector from the fog lamp housing.

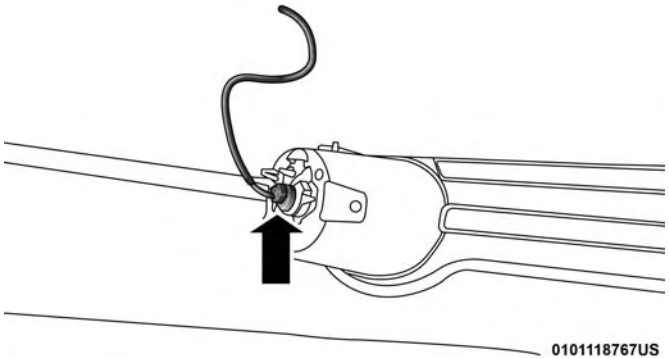

Front Fog Lamp Electrical Connector

3. Squeeze the two tabs on the side of the bulb socket and pull straight out from the fog lamp.

CAUTION!

Never introduce leaded fuel to the tank, even in small amounts in an emergency, as this would damage the catalytic converter beyond repair.

4. Install the replacement bulb and connector assembly straight into the fog lamp until it locks into place.
5. Reinstall the front lower wheel well access panel and fasteners.

Rear Turn Signal And Backup Lamp

The tail lamps are a two-piece design. The tail/stop/rear turn signal lamps are located in the rear corner body panels. The tail and backup lamps are located in the liftgate.

License Plate Lamp

1. Push the small locking tab sticking out of the end of the lens toward the side of the vehicle and hold it in that position.

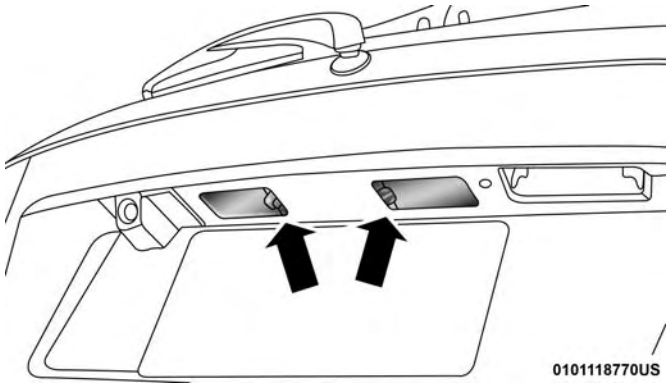

License Lamp

2. Insert a small flat-blade tool between the end of the lens with the locking tab and the surrounding housing and then pivot the tool to separate the lens from the housing.
3. Hold the lens with one hand and rotate the bulb's electrical connector ¼ turn counterclockwise with the other hand and then separate the bulb and connector assembly from the lens.
4. Remove the bulb from the connector socket and install the replacement bulb.
5. Install the bulb and connector assembly into the lens and rotate the connector ¼ turn clockwise to lock it in place.
6. Insert the end of the lens without the locking tab into the housing on the liftgate and then push the opposite end of the lens into the housing, making sure it locks in the housing.

FUSES

WARNING!

- **When replacing a blown fuse, always use an appropriate replacement fuse with the same amp rating as the original fuse. Never replace a fuse with another fuse of higher amp rating. Never replace a blown fuse with metal wires or any other material. Do not place a fuse inside a circuit breaker cavity or vice versa. Failure to use proper fuses may result in serious personal injury, fire and/or property damage.**
- **Before replacing a fuse, make sure that the ignition is off and that all the other services are switched off and/or disengaged.**
- **If the replaced fuse blows again, contact an authorized dealer.**
- **If a general protection fuse for safety systems (air bag system, braking system), power unit systems (engine system, transmission system) or steering system blows, contact an authorized dealer.**

Interior Fuses

The interior fuse panel is located on the passenger side under the instrument panel.

Cavity	Cartridge Fuse	Mini-Fuse	Description
F100	30 Amp Pink	–	110V AC Inverter – If Equipped
F101	–	10 Amp Red	Interior Lights
F102	–	20 Amp Yellow	Cigar Lighter in Instrument Panel/Left Rear Power Outlet
F103	–	20 Amp Yellow	Power Outlet in Console Bin/Power Outlet in Rear of Console
F105	–	20 Amp Yellow	Heated Seats – If Equipped
F106	–	20 Amp Yellow	Rear Power Outlet
F107	–	10 Amp Red	Rear Camera – If Equipped
F108	–	15 Amp Blue	Instrument Panel
F109	–	10 Amp Red	Climate Control/HVAC
F110	–	10 Amp Red	Occupant Restraint Controller
F112	–	10 Amp Red	Spare
F114	–	20 Amp Yellow	Rear HVAC Blower/Motor
F115	–	20 Amp Yellow	Rear Wiper Motor
F116	30 Amp Pink	–	Rear Defroster (EBL)

Cavity	Cartridge Fuse	Mini-Fuse	Description
F117	–	10 Amp Red	Heated Mirrors
F118	–	10 Amp Red	Occupant Restraint Controller
F119	–	10 Amp Red	Steering Column Control Module
F120	–	10 Amp Red	All Wheel Drive – If Equipped
F121	–	15 Amp Blue	Wireless Ignition Node
F122	–	25 Amp Clear	Driver Door Module
F123	–	25 Amp Clear	Passenger Door Module
F124	–	10 Amp Red	Mirrors
F125	–	10 Amp Red	Steering Column Control Module
F126	–	25 Amp Clear	Audio Amplifier
F127	–	20 Amp Yellow	Trailer Tow – If Equipped
F128	–	15 Amp Blue	Radio
F129	–	15 Amp Blue	Video/DVD – If Equipped
F130	–	15 Amp Blue	Climate Control/Instrument Panel
F131	–	10 Amp Red	Passenger Assistance/Hands Free System – If Equipped
F132	–	10 Amp Red	Tire Pressure Module
F133	–	10 Amp Red	Cyber Security Gateway

Underhood Fuses (Power Distribution Center)

The power distribution center is located in the engine compartment.

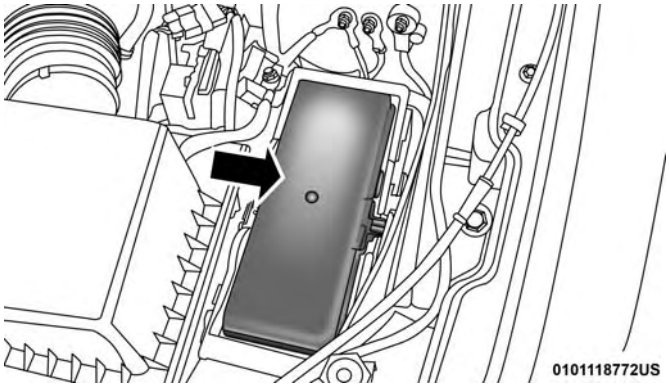

Power Distribution Center

Cavity	Cartridge Fuse	Mini-Fuse	Description
F101	60 Amp Yellow	–	Interior Power Distribution Center Rail
F102	60 Amp Yellow	–	Interior Power Distribution Center Rail
F103	60 Amp Yellow	–	Interior Power Distribution Center Rail
F105	60 Amp Yellow	–	Interior Power Distribution Center Rail Ignition Run Relay

Cavity	Cartridge Fuse	Mini-Fuse	Description
F106	60 Amp Yellow	–	Interior Power Distribution Center Rail Run/ Accessory Relays
F139	40 Amp Green	–	Climate Control System Blower
F140	30 Amp Pink	–	Power Locks
F141	40 Amp Green	–	Anti-Lock Brake System
F142	40 Amp Green	–	Glow Plugs – If Equipped
F143	40 Amp Green	–	Exterior Lights 1
F144	40 Amp Green	–	Exterior Lights 2
F145	30 Amp Pink	–	To Body Computer – Lamp
F146	30 Amp Pink	–	Spare
F147	30 Amp Pink	–	Spare
F148	40 Amp Green	–	Radiator Fan Motor
F149	30 Amp Pink	–	Starter Solenoid
F150	–	25 Amp Clear	Powertrain Control Modules
F151	30 Amp Pink	–	Headlamp Washer Motor – If Equipped
F152	–	25 Amp Clear	Diesel Fuel Heater – If Equipped
F153	–	20 Amp Yellow	Fuel Pump
F156	–	10 Amp Red	Brake/Electronic Stability Control Module
F157	–	10 Amp Red	Power Transfer Unit Module – If Equipped
F158	–	10 Amp Red	Active Hood Module – If Equipped

Cavity	Cartridge Fuse	Mini-Fuse	Description
F159	–	10 Amp Red	Spare
F160	–	20 Amp Yellow	Interior Lights
F161	–	20 Amp Yellow	Horn
F162	40 Amp Red/20 Amp Lt. Blue	–	Cabin Heater #1/Vacuum Pump – If Equipped
F163	50 Amp Red	–	Cabin Heater #2 – If Equipped
F164	–	25 Amp Clear	Powertrain Auto Shutdown
F165	–	20 Amp Yellow	Powertrain Shutdown
F166	–	20 Amp Yellow	Spare
F167	–	30 Amp Green	Powertrain Shutdown
F168	–	10 Amp Red	Air Conditioner Clutch
F169	40 Amp Green	–	Emissions – Partial Zero Emissions Vehicle Motor
F170	–	15 Amp Blue	Emissions – Partial Zero Emissions Vehicle Actuators
F172	–	20 Amp Yellow	Spare
F173	–	25 Amp Clear	Anti Lock Brake Valves
F174	–	20 Amp Yellow	Siren – If Equipped
F175	–	30 Amp Green	Spare
F176	–	10 Amp Red	Powertrain Control Modules

Cavity	Cartridge Fuse	Mini-Fuse	Description
F177	–	20 Amp Yellow	All Wheel Drive Module – If Equipped
F178	–	25 Amp Clear	Sunroof – If Equipped
F179	–	10 Amp Red	Battery Sensor
F181	100 Amp Blue	–	Electrohydraulic Steering (EHPS) – If Equipped
F182	50 Amp Red	–	Cabin Heater #3 – If Equipped
F184	30 Amp Pink	–	Front Wiper Motor

JACKING AND TIRE CHANGING

WARNING!

- **Do not attempt to change a tire on the side of the vehicle close to moving traffic. Pull far enough off the road to avoid the danger of being hit when operating the jack or changing the wheel.**
- **Being under a jacked-up vehicle is dangerous. The vehicle could slip off the jack and fall on you. You could be crushed. Never put any part of your body**

(Continued)

WARNING! ***(Continued)***

under a vehicle that is on a jack. If you need to get under a raised vehicle, take it to a service center where it can be raised on a lift.
- **Never start or run the engine while the vehicle is on a jack.**
- **The jack is designed to be used as a tool for changing tires only. The jack should not be used to lift the vehicle for service purposes. The vehicle should be jacked on a firm level surface only. Avoid ice or slippery areas.**

Jack Location

The jack and jack-handle are stowed underneath a cover in the rear storage bin in the cargo area.

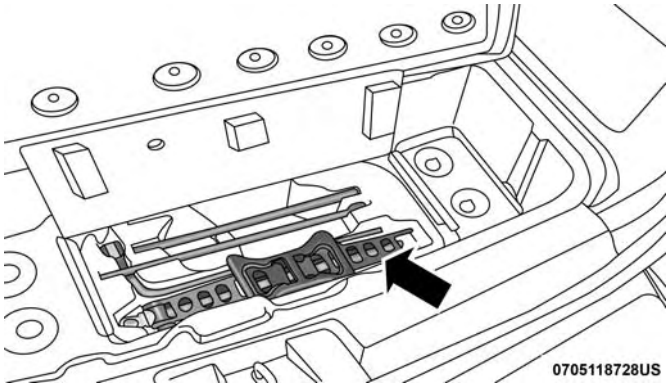

Jack Storage Location

Spare Tire Location And Removal

The spare tire is stowed underneath the rear of the vehicle and is held in place by means of a cable winch mechanism.

Spare Tire Removal

NOTE: On seven-passenger models, fold the third-row passenger seats flat. This will provide more space when accessing the jacking tools and when operating the winch mechanism.

1. Remove the jack-handle components 1, 2 and 3 from storage and assemble them.

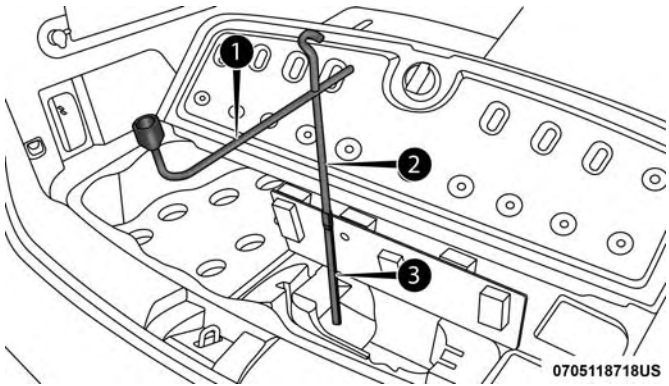

Lowering/Raising Spare Tire

1 — Spare Tire Jack Handle
2 — Extension 1
3 — Extension 2

NOTE: Assemble components 2 and 3 by seating the small ball at the end of component 2 in the small hole at the end of component 3. This will lock these components together. Assemble components 1 and 2 so that the wheel nut socket at the end of component 1 faces upward when seated on component 2. This will make it easier to rotate the assembly when operating the winch mechanism.

2. Fit the assembled jack-handle over the winch drive nut located in the jack storage area. Rotate the jack-handle assembly counterclockwise until the spare tire is on the ground with enough cable slack to allow you to pull the spare tire out from underneath the vehicle.

CAUTION!

The winch mechanism is designed for use with the jack wrench extension tool only. Use of air wrench or power tool may damage the winch.

3. Pull the spare tire out from underneath the vehicle and raise it upright so the tire's tread is on the ground.
4. Tilt the retainer at the end of the winch cable and remove it from the center of the wheel.

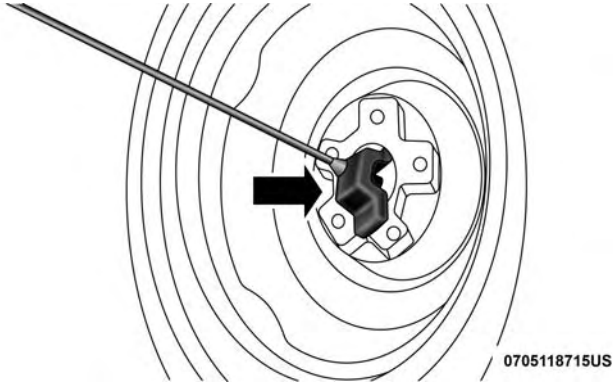

Spare Tire Retainer

Preparations For Jacking

1. Park the vehicle on a firm, level surface as far from the edge of the roadway as possible. Avoid icy or slippery areas.

WARNING!

Do not attempt to change a tire on the side of the vehicle close to moving traffic, pull far enough off the road to avoid being hit when operating the jack or changing the wheel.

2. Turn on the Hazard Warning flashers.
3. Apply the parking brake.
4. Place the gear selector in PARK.
5. Turn OFF the ignition.
6. Block both the front and rear of the wheel diagonally opposite the jacking position. For example, if the right front wheel is being changed, block the left rear wheel.

NOTE: Passengers should not remain in the vehicle when the vehicle is being jacked.

Jacking Instructions

WARNING!

Carefully follow these tire changing warnings to help prevent personal injury or damage to your vehicle:

- **Always park on a firm, level surface as far from the edge of the roadway as possible before raising the vehicle.**

(Continued)

WARNING! ***(Continued)***

- **Turn on the Hazard Warning flasher.**
- **Block the wheel diagonally opposite the wheel to be raised.**
- **Set the parking brake firmly and set the transmission in PARK.**
- **Never start or run the engine with the vehicle on a jack.**
- **Do not let anyone sit in the vehicle when it is on a jack.**
- **Do not get under the vehicle when it is on a jack. If you need to get under a raised vehicle, take it to a service center where it can be raised on a lift.**
- **Only use the jack in the positions indicated and for lifting this vehicle during a tire change.**
- **If working on or near a roadway, be extremely careful of motor traffic.**
- **To assure that spare tires, flat or inflated, are securely stowed, spares must be stowed with the valve stem facing the ground.**

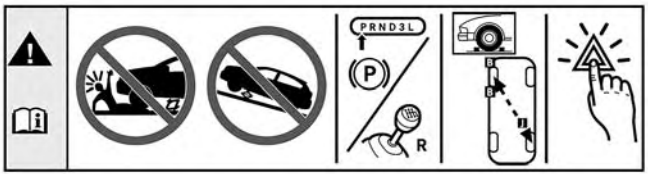

Jack Warning Label

CAUTION!

Do not attempt to raise the vehicle by jacking on locations other than those indicated in the Jacking Instructions for this vehicle.

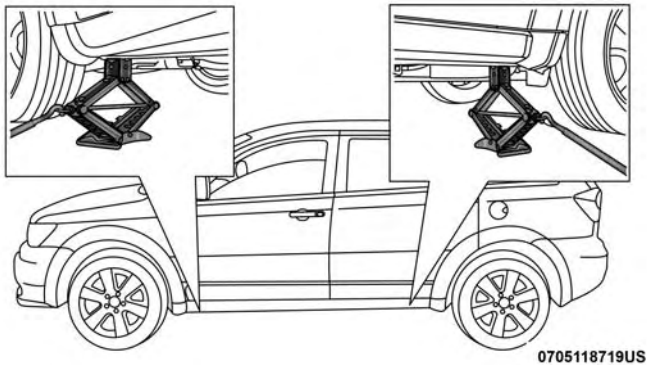

Jacking Locations

1. Remove the spare tire, jack, and jack-handle from stowage.
2. Loosen, but do not remove, the wheel nuts on the wheel with the flat tire. Turn the wheel nuts counterclockwise one turn while the wheel is still on the ground.
3. Place the jack in the notches underneath the lift area that is closest to the flat tire. Center the jack saddle between the drain flute formations on the sill flange. Turn the jack screw clockwise to firmly engage the jack saddle with the lift area of the sill flange.

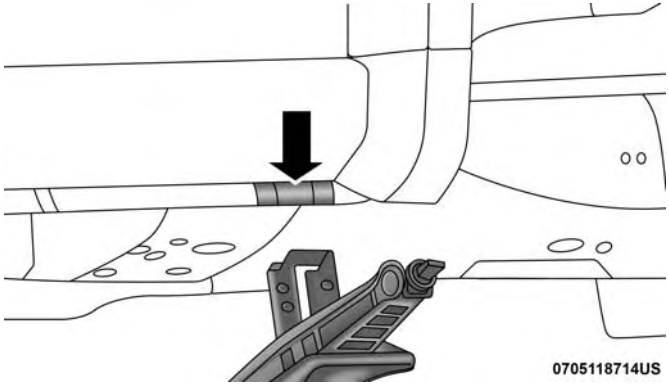

Front Jacking Location

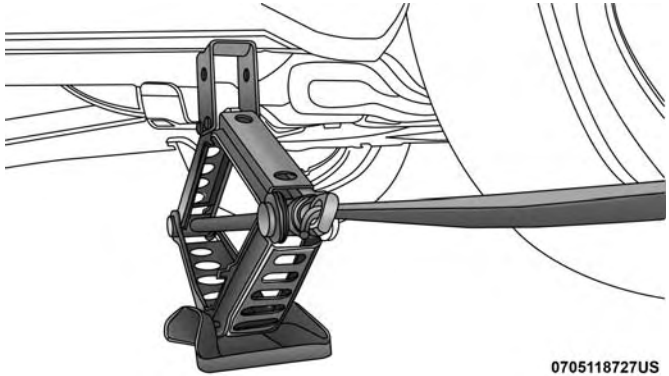

Front Jack Engaged With Jack Handle

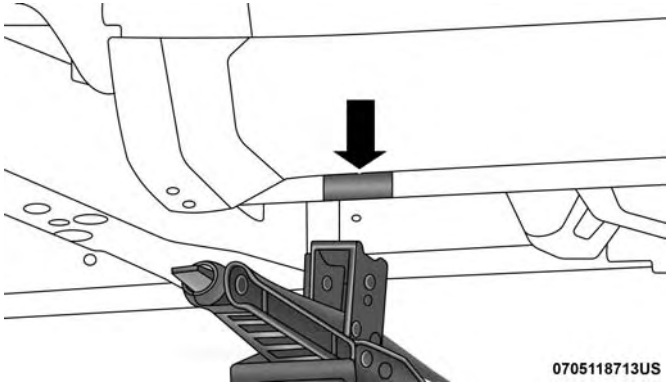

Rear Jacking Location

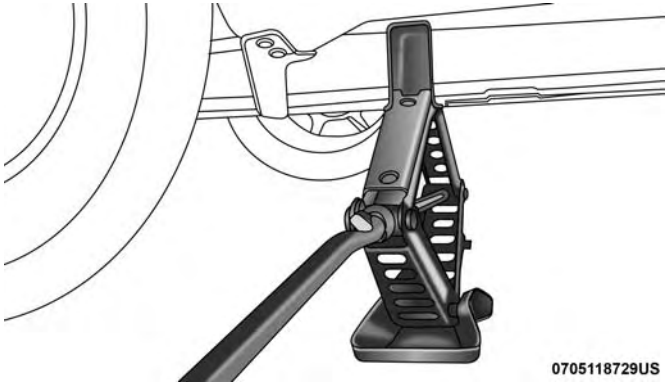

Rear Jack Engaged With Jack Handle

4. Raise the vehicle by turning the jack screw clockwise with the jack handle. Raise the vehicle until the tire just clears the road surface and enough clearance is obtained to install the spare tire. Minimum tire lift provides maximum stability.

WARNING!

Raising the vehicle higher than necessary can make the vehicle less stable. It could slip off the jack and hurt someone near it. Raise the vehicle only enough to remove the tire.

5. Remove the wheel nuts. For vehicles so equipped, remove the wheel cover from the wheel by hand. Do not pry the wheel cover off. Then, pull the wheel off the hub.

WARNING!

To avoid possible personal injury, handle the wheel covers with care to avoid contact with any sharp edges.

6. Install the spare tire.

CAUTION!

Be sure to mount the spare tire with the valve stem facing outward. The vehicle could be damaged if the spare tire is mounted incorrectly.

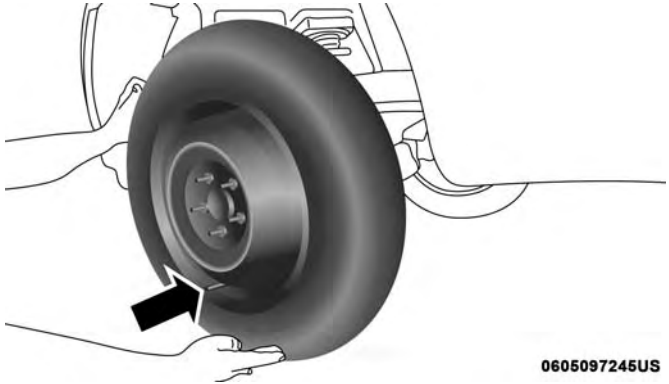

Mounting Spare Tire

NOTE:

- For vehicles so equipped, do not attempt to install a center cap or wheel cover on the compact spare.
- Refer to “Compact Spare Tire” and to “Limited-Use Spare” under “Tires” in “Servicing And Maintenance” for additional warnings, cautions, and information about the spare tire, its use, and operation.

7. Install the wheel nuts with the cone-shaped end of the nut toward the wheel. Lightly tighten the wheel nuts.

WARNING!

To avoid the risk of forcing the vehicle off the jack, do not tighten the wheel nuts fully until the vehicle has been lowered. Failure to follow this warning may result in serious injury.

8. Lower the vehicle by turning the jack screw counter-clockwise with the jack handle.
9. Finish tightening the lug nuts. Push down on the wrench while at the end of the handle for increased leverage. Tighten the lug nuts in a star pattern until each nut has been tightened twice. For the correct lug nut torque, refer to "Torque Specifications" in "Technical Specifications". If in doubt about the correct tightness, have them checked with a torque wrench by your authorized dealer or service station.
10. Lower the jack to its fully closed position.
11. Place the deflated (flat) tire in the cargo area. **Do not stow the deflated tire in the spare tire stowage location.** Have the deflated (flat) tire repaired or replaced as soon as possible.
12. To stow the winch cable and retainer, fit the assembled jack-handle over the winch drive nut. Rotate the jack-handle assembly clockwise until you hear the winch mechanism click three times. It cannot be over tightened.
13. Stow the jack-handle and jack. Remove the wheel blocks from the vehicle and release the park brake.
14. Check the tire pressure as soon as possible. Adjust the tire pressure as required.

Road Tire Installation

Vehicles Equipped With Wheel Covers

1. Mount the road tire on the axle.
2. To ease the installation process for steel wheels with wheel covers, install two lug nuts on the mounting studs which are on each side of the valve stem. Install the lug nuts with the cone shaped end of the nut toward the wheel. Lightly tighten the lug nuts.

WARNING!

To avoid the risk of forcing the vehicle off the jack, do not tighten the wheel nuts fully until the vehicle has been lowered. Failure to follow this warning may result in serious injury.

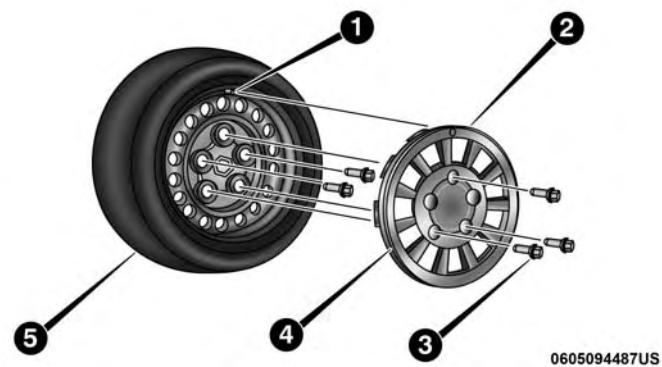

Tire And Wheel Cover Or Center Cap

1 — Valve Stem
2 — Valve Notch
3 — Wheel Lug Nut
4 — Wheel Cover
5 — Road Wheel

3. Align the valve notch in the wheel cover with the valve stem on the wheel. Install the cover by hand, snapping the cover over the two lug nuts. Do not use a hammer or excessive force to install the cover.
4. Install the remaining lug nuts with the cone shaped end of the nut toward the wheel. Lightly tighten the lug nuts.

WARNING!

To avoid the risk of forcing the vehicle off the jack, do not tighten the wheel nuts fully until the vehicle has been lowered. Failure to follow this warning may result in serious injury.

5. Lower the vehicle to the ground by turning the jack handle counterclockwise.
6. Finish tightening the lug nuts. Push down on the wrench while at the end of the handle for increased leverage. Tighten the lug nuts in a star pattern until each nut has been tightened twice. For the correct lug nut torque, refer to “Torque Specifications” in “Technical Specifications”. If in doubt about the correct tightness, have them checked with a torque wrench by your authorized dealer or service station.

7. After 25 miles (40 km), check the lug nut torque with a torque wrench to ensure that all lug nuts are properly seated against the wheel.

Vehicles Without Wheel Covers

1. Mount the road tire on the axle.
2. Install the remaining lug nuts with the cone shaped end of the nut toward the wheel. Lightly tighten the lug nuts.

WARNING!

To avoid the risk of forcing the vehicle off the jack, do not tighten the wheel nuts fully until the vehicle has been lowered. Failure to follow this warning may result in serious injury.

3. Lower the vehicle to the ground by turning the jack handle counterclockwise.
4. Finish tightening the lug nuts. Push down on the wrench while at the end of the handle for increased leverage. Tighten the lug nuts in a star pattern until each nut has been tightened twice. For proper lug nut torque, refer to "Torque Specifications" in "Technical Specifications". If in doubt about the correct tightness, have them checked with a torque wrench by your authorized dealer or service station.
5. After 25 miles (40 km), check the lug nut torque with a torque wrench to ensure that all lug nuts are properly seated against the wheel.

Spare Tire Stowage

NOTE: Refer to "Spare Tire Location And Removal" for information on assembling the winch tools.

1. Place the spare tire near to the winch cable. Hold the spare upright so that the tire's tread is on the ground and the valve stem is at the top of the wheel facing away from the rear of the vehicle.
2. Tilt the retainer at the end of the winch cable and drop it through the center of the wheel. Then place the spare tire with the cable and retainer underneath the vehicle.
3. Fit the assembled jack-handle over the winch drive nut. Rotate the jack-handle assembly clockwise to raise the spare tire into the storage area. Continue to rotate the

jack-handle assembly until you hear the winch mechanism click three times. It cannot be over tightened. Push against the tire several times to be sure it is held securely in place.

JUMP STARTING

If your vehicle has a discharged battery, it can be jump started using a set of jumper cables and a battery in another vehicle, or by using a portable battery booster pack. Jump starting can be dangerous if done improperly, so please follow the procedures in this section carefully.

WARNING!

Do not attempt jump starting if the battery is frozen. It could rupture or explode and cause personal injury.

CAUTION!

Do not use a portable battery booster pack or any other booster source with a system voltage greater than 12 Volts or damage to the battery, starter motor, alternator or electrical system may occur.

NOTE: When using a portable battery booster pack, follow the manufacturer's operating instructions and precautions.

Preparations For Jump Start

The battery in your vehicle is located between the left front headlight assembly and the left front wheel splash shield. To allow jump starting, there are remote battery posts located on the left side of the engine compartment.

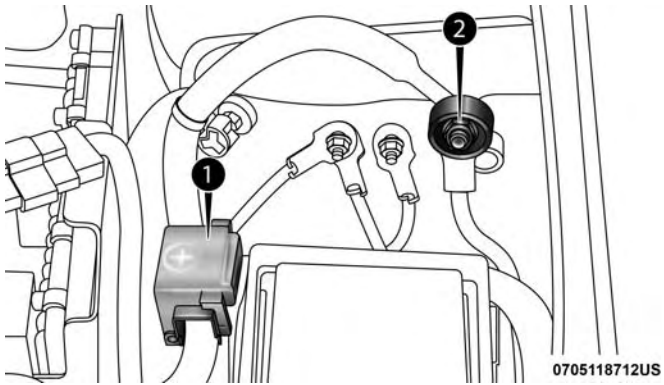

Remote Battery Posts

1 — Remote Positive (+) Post (Covered With Protective Cap)
2 — Remote Negative (-) Post

WARNING!

- **Take care to avoid the radiator cooling fan whenever the hood is raised. It can start anytime the ignition switch is ON. You can be injured by moving fan blades.**
- **Remove any metal jewelry such as rings, watch bands and bracelets that could make an inadvertent electrical contact. You could be seriously injured.**
- **Batteries contain sulfuric acid that can burn your skin or eyes and generate hydrogen gas which is flammable and explosive. Keep open flames or sparks away from the battery.**

1. Apply the parking brake, shift the automatic transmission into PARK and turn the ignition to LOCK.
2. Turn off the heater, radio, and all unnecessary electrical accessories.
3. Remove the protective cover over the remote positive **(+)** battery post. To remove the cover, push the locking tab and pull upward on the cover.
4. If using another vehicle to jump start the battery, park the vehicle within the jumper cable's reach, set the parking brake and make sure the ignition is OFF.

WARNING!

Do not allow vehicles to touch each other as this could establish a ground connection and personal injury could result.

Jump Starting Procedure

WARNING!

Failure to follow this jump starting procedure could result in personal injury or property damage due to battery explosion.

CAUTION!

Failure to follow these procedures could result in damage to the charging system of the booster vehicle or the discharged vehicle.

Connecting The Jumper Cables

1. Connect the positive **(+)** end of the jumper cable to the remote positive **(+)** post of the discharged vehicle.
2. Connect the opposite end of the positive **(+)** jumper cable to the positive **(+)** post of the booster battery.
3. Connect the negative end **(-)** of the jumper cable to the negative **(-)** post of the booster battery.
4. Connect the opposite end of the negative **(-)** jumper cable to the remote negative **(-)** post of the vehicle with the discharged battery.

WARNING!

Do not connect the jumper cable to the negative (-) post of the discharged battery. The resulting electrical spark could cause the battery to explode and could result in personal injury. Only use the specific ground point, do not use any other exposed metal parts.

5. Start the engine in the vehicle that has the booster battery, let the engine idle a few minutes, and then start the engine in the vehicle with the discharged battery.
6. Once the engine is started, remove the jumper cables in the reverse sequence:

Disconnecting The Jumper Cables

1. Disconnect the negative **(-)** jumper cable from the remote negative **(-)** post of the vehicle with the discharged battery.
2. Disconnect the negative end **(-)** of the jumper cable from the negative **(-)** post of the booster battery.
3. Disconnect the opposite end of the positive **(+)** jumper cable from the positive **(+)** post of the booster battery.
4. Disconnect the positive **(+)** end of the jumper cable from the remote positive **(+)** post of the discharged vehicle.
5. Reinstall the protective cover over the remote positive **(+)** battery post of the discharged vehicle.

If frequent jump starting is required to start your vehicle, you should have the battery and charging system inspected at your authorized dealer.

CAUTION!

Accessories plugged into the vehicle power outlets draw power from the vehicle's battery, even when not in use (i.e., cellular devices, etc.). Eventually, if plugged in long enough without engine operation, the vehicle's battery will discharge sufficiently to degrade battery life and/or prevent the engine from starting.

IF YOUR ENGINE OVERHEATS

In any of the following situations, you can reduce the potential for overheating by taking the appropriate action.

- On the highways — slow down.
- In city traffic — while stopped, place the transmission in NEUTRAL, but do not increase the engine idle speed while preventing vehicle motion with the brakes.

NOTE: There are steps that you can take to slow down an impending overheat condition:

- If your air conditioner (A/C) is on, turn it off. The A/C system adds heat to the engine cooling system and turning the A/C off can help remove this heat.
- You can also turn the temperature control to maximum heat, the mode control to floor and the blower control to high. This allows the heater core to act as a supplement to the radiator and aids in removing heat from the engine cooling system.

WARNING!

You or others can be badly burned by hot engine coolant (antifreeze) or steam from your radiator. If you see or hear steam coming from under the hood, do not open the hood until the radiator has had time to cool. Never try to open a cooling system pressure cap when the radiator or coolant bottle is hot.

CAUTION!

Driving with a hot cooling system could damage your vehicle. If the temperature gauge reads HOT (H), pull over and stop the vehicle. Idle the vehicle with the air conditioner turned off until the pointer drops back into the normal range. If the pointer remains on HOT (H), and you hear continuous chimes, turn the engine off immediately and call for service.

2.4L Engine — If Equipped

On hot days, the engine oil temperature may become too hot during sustained high-speed driving or if towing a trailer up long grades. If this happens, a HOTOIL message will flash in the odometer and the vehicle speed will be reduced to 48 mph (77 km/h) maximum until the engine oil temperature is reduced.

NOTE: The maximum vehicle speed is reduced to 48 mph (77 km/h), you may reduce vehicle speed further as needed. Once the engine oil temperature is reduced, you may continue to drive normally

GEAR SELECTOR OVERRIDE

If a malfunction occurs and the gear selector cannot be moved out of the PARK position, you can use the following procedure to temporarily move the gear selector:

1. Turn the engine OFF.
2. Firmly apply the parking brake.
3. Open the center console and remove the gear selector override access cover (located in the front lower right corner of the console storage bin).
4. Press and maintain firm pressure on the brake pedal.
5. Insert a screwdriver or similar small tool into the access port, and push and hold the override release lever forward.
6. Move the gear selector to the NEUTRAL position.
7. The vehicle may then be started in NEUTRAL.
8. Reinstall the gear selector override access cover.

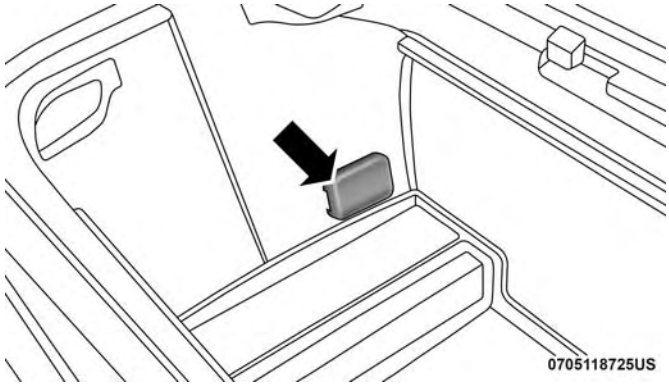

Gear Selector Override Access Cover

FREEING A STUCK VEHICLE

If your vehicle becomes stuck in mud, sand, or snow, it can often be moved using a rocking motion. Turn the steering wheel right and left to clear the area around the front wheels. Then, shift back and forth between DRIVE and REVERSE while gently pressing the accelerator. Use the least amount of accelerator pedal pressure that will maintain the rocking motion, without spinning the wheels or racing the engine.

CAUTION!

Racing the engine or spinning the wheels may lead to transmission overheating and failure. Allow the engine to idle with the transmission in NEUTRAL for at least one minute after every five rocking-motion cycles. This will minimize overheating and reduce the risk of transmission failure during prolonged efforts to free a stuck vehicle.

Push the "ESC Off" switch, to place the Electronic Stability Control (ESC) system in "ESC Partial Off" mode, before rocking the vehicle. Refer to "Electronic Brake Control" in "Safety" for further information. Once the vehicle has been freed, push the "ESC Off" switch again to restore "ESC On" mode.

WARNING!

Fast spinning tires can be dangerous. Forces generated by excessive wheel speeds may cause damage, or even failure, of the axle and tires. A tire could explode and injure someone. Do not spin your vehicle's wheels faster than 30 mph (48 km/h) or for longer than 30 seconds continuously without stopping when you are stuck and do not let anyone near a spinning wheel, no matter what the speed.

CAUTION!

- **When "rocking" a stuck vehicle by shifting between DRIVE and REVERSE, do not spin the wheels faster than 15 mph (24 km/h), or drivetrain damage may result.**
- **Revving the engine or spinning the wheels too fast may lead to transmission overheating and failure. It can also damage the tires. Do not spin the wheels above 30 mph (48 km/h) while in gear (no transmission shifting occurring).**

TOWING A DISABLED VEHICLE

This section describes procedures for towing a disabled vehicle using a commercial towing service.

Towing Condition	Wheel OFF The Ground	FWD MODELS	AWD MODELS
Flat Tow	NONE	**IF transmission is operable:** • Ignition in ACC or ON/RUN mode • Transmission in **NEUTRAL** • 25 mph (40 km/h) **max** speed • 15 miles (24 km) **max** distance	**NOT ALLOWED**
Wheel Lift Or Dolly Tow	Rear		**NOT ALLOWED**
	Front	OK	**NOT ALLOWED**
Flatbed	**ALL**	**BEST METHOD**	OK

Proper towing or lifting equipment is required to prevent damage to your vehicle. Use only tow bars and other equipment designed for this purpose, following equipment manufacturer's instructions. Use of safety chains is mandatory. Attach a tow bar or other towing device to main structural members of the vehicle, not to bumpers or associated brackets. State and local laws regarding vehicles under tow must be observed.

If you must use the accessories (wipers, defrosters, etc.) while being towed, the ignition must be in the ON/RUN mode, not the ACC mode.

If the key fob is unavailable, or the vehicle's battery is discharged, refer to "Gear Selector Override" in this section for instructions on shifting the transmission out of PARK for towing.

CAUTION!

- **Do not use sling type equipment when towing. Vehicle damage may occur.**
- **When securing the vehicle to a flatbed truck, do not attach to front or rear suspension components. Damage to your vehicle may result from improper towing.**
- **Do not push or tow this vehicle with another vehicle as damage to the bumper fascia and transmission may result.**

All-Wheel Drive (AWD) Models

The manufacturer requires towing with all four wheels OFF the ground. Acceptable methods are to tow the vehicle on a flatbed, or with one end of the vehicle raised and the opposite end on a towing dolly.

CAUTION!

Towing this vehicle in violation of the above requirements can cause severe transmission and/or power transfer unit damage. Damage from improper towing is not covered under the New Vehicle Limited Warranty.

Front-Wheel Drive (FWD) Models

The manufacturer recommends towing your vehicle with all four wheels **OFF** the ground using a flatbed.

If flatbed equipment is not available, and the transmission is operable, the vehicle may be flat towed (with all four wheels on the ground) under the following conditions:

- The transmission must be in NEUTRAL.
- The towing distance must not exceed 15 miles (24 km).
- The towing speed must not exceed 25 mph (40 km/h).

If the transmission is not operable, or the vehicle must be towed faster than 25 mph (40 km/h) or farther than 15 miles (24 km), it must be towed with the front wheels OFF the ground (using a flatbed truck, towing dolly, or wheel lift equipment with the front wheels raised).

CAUTION!

Towing faster than 25 mph (40 km/h) or farther than 15 miles (24 km) with front wheels on the ground can cause severe transmission damage. Damage from improper towing is not covered by the New Vehicle Limited Warranty.

ENHANCED ACCIDENT RESPONSE SYSTEM (EARS)

This vehicle is equipped with an Enhanced Accident Response System.

Please refer to "Occupant Restraint Systems" in "Safety" for further information on the Enhanced Accident Response System (EARS) function.

EVENT DATA RECORDER (EDR)

This vehicle is equipped with an Event Data Recorder (EDR). The main purpose of an EDR is to record data that will assist in understanding how a vehicle's systems performed under certain crash or near crash-like situations, such as an air bag deployment or hitting a road obstacle.

Please refer to "Occupant Restraint Systems" in "Safety" for further information on the Event Data Recorder (EDR).

SERVICING AND MAINTENANCE

CONTENTS

■ SCHEDULED SERVICING 313
- □ Maintenance Plan. 314

■ ENGINE COMPARTMENT 318
- □ 2.4L Engine 318
- □ 3.6L Engine 319
- □ Checking Oil Level 320
- □ Adding Washer Fluid 320
- □ Maintenance-Free Battery 321

■ DEALER SERVICE 322
- □ Engine Oil 322
- □ Engine Oil Filter 324
- □ Engine Air Cleaner Filter 324
- □ Air Conditioner Maintenance 325
- □ Accessory Drive Belt Inspection 326
- □ Body Lubrication 327
- □ Windshield Wiper Blades 327
- □ Exhaust System 329
- □ Cooling System 331
- □ Brake System 336
- □ Automatic Transmission 337
- □ Rear Drive Assembly (RDA) – AWD Models Only 340
- □ Power Transfer Unit (PTU) – AWD Models Only 340

■ RAISING THE VEHICLE 341

■ TIRES 341
- □ Tire Safety Information 341
- □ Tires — General Information 350
- □ Tire Types 356

- Spare Tires — If Equipped 358
- Wheel And Wheel Trim Care 360
- Tire Chains (Traction Devices) 361
- Tire Rotation Recommendations 362

■ DEPARTMENT OF TRANSPORTATION UNIFORM TIRE QUALITY GRADES 364

- Treadwear 364
- Traction Grades 364
- Temperature Grades 364

■ BODYWORK 365

- Protection From Atmospheric Agents 365
- Body And Underbody Maintenance 366
- Preserving The Bodywork 366

■ INTERIORS 367

- Seats And Fabric Parts 367
- Plastic And Coated Parts. 368
- Leather Parts 368
- Glass Surfaces 369
- Cleaning The Cupholders 369

SCHEDULED SERVICING

Your vehicle is equipped with an automatic oil change indicator system. The oil change indicator system will remind you that it is time to take your vehicle in for scheduled maintenance.

Based on engine operation conditions, the oil change indicator message will illuminate. This means that service is required for your vehicle. Operating conditions such as frequent short-trips, trailer tow, extremely hot or cold ambient temperatures, and E-85 fuel usage will influence when the "Change Oil" or "Oil Change Required" message is displayed. Severe Operating Conditions can cause the change oil message to illuminate as early as 3,500 miles (5,600 km) since last reset. Have your vehicle serviced as soon as possible, within the next 500 miles (805 km).

Your authorized dealer will reset the oil change indicator message after completing the scheduled oil change. If a scheduled oil change is performed by someone other than your authorized dealer, the message can be reset by referring to the steps described under "Instrument Cluster Display" in "Getting To Know Your Instrument Panel" for further information.

NOTE: Under no circumstances should oil change intervals exceed 10,000 miles (16,000 km), twelve months or 350 hours of engine run time, whichever comes first. The 350 hours of engine run or idle time is generally only a concern for fleet customers.

Severe Duty All Models

Change engine oil at 4,000 miles (6,500 km) or 350 hours of engine run time if the vehicle is operated in a dusty and off road environment or is operated predominately at idle or only very low engine RPM's. This type of vehicle use is considered Severe Duty.

Once A Month Or Before A Long Trip:

- Check engine oil level.
- Check windshield washer fluid level.
- Check tire pressure and look for unusual wear or damage. Rotate tires at the first sign of irregular wear, even if it occurs before the oil indicator system turns on.
- Check the fluid levels of the coolant reservoir, brake master cylinder, power steering, and transmission (4-speed only) and fill as needed.
- Check function of all interior and exterior lights.

Maintenance Plan

Required Maintenance Intervals.

Refer to the maintenance plan on the following page for the required maintenance intervals.

At Every Oil Change Interval As Indicated By Oil Change Indicator System:
• Change oil and filter.
• Rotate the tires. **Rotate at the first sign of irregular wear, even if it occurs before the oil indicator system turns on.**
• Inspect battery and clean and tighten terminals as required.
• Inspect automatic transmission fluid if equipped with dipstick.
• Inspect brake pads, shoes, rotors, drums, hoses and park brake.
• Inspect engine cooling system protection and hoses.
• Inspect exhaust system.
• Inspect engine air cleaner if using in dusty or off-road conditions.

Mileage or time passed (whichever comes first)	20,000	30,000	40,000	50,000	60,000	70,000	80,000	90,000	100,000	110,000	120,000	130,000	140,000	150,000
Or Years:	**2**	**3**	**4**	**5**	**6**	**7**	**8**	**9**	**10**	**11**	**12**	**13**	**14**	**15**
Or Kilometers:	32,000	48,000	64,000	80,000	96,000	112,000	128,000	144,000	160,000	176,000	192,000	208,000	224,000	240,000
Additional Inspections														
Inspect the CV joints.		X			X			X			X			X
Inspect front suspension, tie rod ends, and replace if necessary.	X		X		X		X		X		X		X	
Inspect the brake linings, parking brake function.	X		X		X		X		X		X		X	
Additional Maintenance														
Replace engine air filter.		X			X			X			X			X
Replace air conditioning filter.	X		X		X		X		X		X		X	
Replace spark plugs (2.4L Engine). **		X			X			X			X			X
Replace spark plugs (3.6L Engine). **									X					
Flush and replace the engine coolant at 10 years or 150,000 miles (240,000 km) whichever comes first.									X					X

Mileage or time passed (whichever comes first)	20,000	30,000	40,000	50,000	60,000	70,000	80,000	90,000	100,000	110,000	120,000	130,000	140,000	150,000
Or Years:	2	3	4	5	6	7	8	9	10	11	12	13	14	15
Or Kilometers:	32,000	48,000	64,000	80,000	96,000	112,000	128,000	144,000	160,000	176,000	192,000	208,000	224,000	240,000
Change the automatic transmission fluid and filter.											X			
Change the automatic transmission fluid and filter if using your vehicle for any of the following: police, taxi, fleet, or frequent trailer towing.					X						X			
Replace rear drive assembly (RDA) fluid.					X						X			
Replace power transfer unit (PTU) fluid.					X						X			
Inspect and replace PCV valve if necessary.									X					

** The spark plug change interval is mileage based only, yearly intervals do not apply.

WARNING!

- **You can be badly injured working on or around a motor vehicle. Do only service work for which you have the knowledge and the right equipment. If you have any doubt about your ability to perform a service job, take your vehicle to a competent mechanic.**
- **Failure to properly inspect and maintain your vehicle could result in a component malfunction and effect**

(Continued)

WARNING! ***(Continued)***

vehicle handling and performance. This could cause an accident.

Heavy Duty Use Of The Vehicle

Change engine oil at 4,000 miles (6,500 km) or 350 hours of engine run time if the vehicle is operated in a dusty and off road environment or is operated predominately at idle or only very low engine RPM's. This type of vehicle use is considered Severe Duty.

ENGINE COMPARTMENT

2.4L Engine

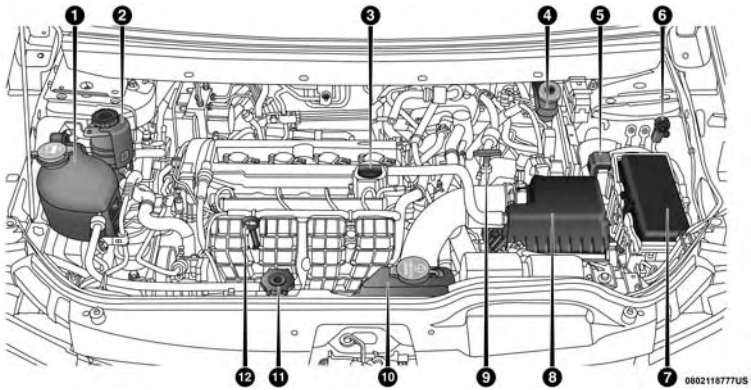

1 — Engine Coolant Reservoir
2 — Power Steering Fluid Reservoir
3 — Engine Oil Fill
4 — Brake Fluid Reservoir
5 — Remote Jump Start (Positive Battery Post)
6 — Remote Jump Start (Negative Battery Post)
7 — Power Distribution Center (Fuses)
8 — Air Cleaner Filter
9 — Automatic Transmission Dipstick (4–Speed Only – If Equipped)
10 — Washer Fluid Reservoir
11 — Coolant Pressure Cap
12 — Engine Oil Dipstick

3.6L Engine

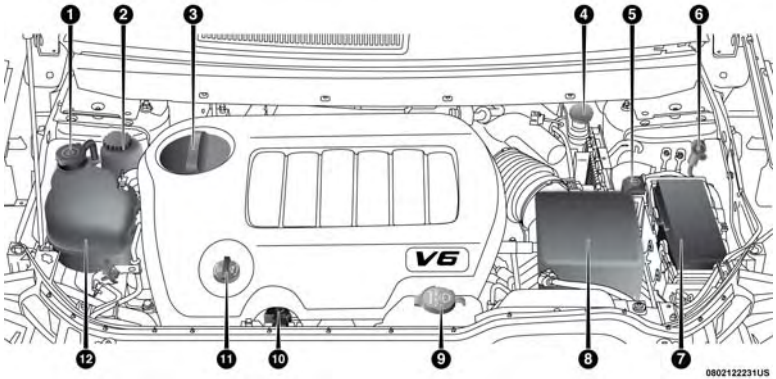

1 — Engine Coolant Reservoir Pressure Cap
2 — Power Steering Fluid Reservoir
3 — Oil Filter Access
4 — Brake Fluid Reservoir
5 — Remote Jump Start (Positive Battery Post)
6 — Remote Jump Start (Negative Battery Post)
7 — Power Distribution Center (Fuses)
8 — Air Cleaner Filter
9 — Washer Fluid Reservoir
10 — Engine Oil Dipstick
11 — Engine Oil Fill
12 — Engine Coolant Reservoir

Checking Oil Level

To assure proper engine lubrication, the engine oil must be maintained at the correct level. Check the oil level at regular intervals, such as every fuel stop. The best time to check the engine oil level is about five minutes after a fully warmed engine is shut off. Checking engine oil level when the engine is cold will give you an incorrect reading.

Checking the oil while the vehicle is on level ground and only when the engine is hot, will improve the accuracy of the oil level readings. Maintain the oil level between the range markings on the dipstick. Either the range markings consist of a crosshatch zone marked SAFE or a crosshatch zone marked with MIN at the low end of the range and MAX at the high end of the range. Adding 1.0 quart (1.0 liter) of oil when the reading is at the low end of the range marking will raise the oil level to the high end of the range marking.

CAUTION!

Do not overfill the engine with oil. Overfilling the engine with oil will cause oil aeration, which can lead

CAUTION! ***(Continued)***

to loss of oil pressure and an increase in oil temperature. This loss of oil pressure and increased oil temperature could damage your engine.

Adding Washer Fluid

The windshield washer and the rear window washer share the same fluid reservoir. The fluid reservoir is located in the engine compartment. Be sure to check the fluid level in the reservoir at regular intervals. Fill the reservoir with windshield washer solvent (not radiator antifreeze) and operate the system for a few seconds to flush out the residual water.

When refilling the washer fluid reservoir, apply some washer fluid to a cloth or towel and wipe the wiper blades clean. This will help blade performance.

To prevent freeze-up of your windshield washer system in cold weather, select a solution or mixture that meets or exceeds the temperature range of your climate. This rating information can be found on most washer fluid containers.

The fluid reservoir will hold nearly 1 gal (4 liters) of washer fluid when the message "LoWASH" appears in the instrument cluster.

WARNING!

Commercially available windshield washer solvents are flammable. They could ignite and burn you. Care must be exercised when filling or working around the washer solution.

Maintenance-Free Battery

Your vehicle is equipped with a maintenance-free battery. You will never have to add water, nor is periodic maintenance required.

NOTE: The battery is stored in a compartment that is located behind the left front fender and is accessible through the wheel well. The wheel and tire assembly do not need to be removed to access the compartment. Remote battery terminals are located in the engine compartment for jump starting. Refer to "Jump Starting Procedures" in "In Case Of Emergency" for further information.

To access the battery, turn the steering wheel fully to the right and remove the access panel from the inner fender shield.

WARNING!

- **Battery fluid is a corrosive acid solution and can burn or even blind you. Do not allow battery fluid to contact your eyes, skin, or clothing. Do not lean over a battery when attaching clamps. If acid splashes in eyes or on skin, flush the area immediately with large amounts of water.**
- **Battery gas is flammable and explosive. Keep flame or sparks away from the battery. Do not use a booster battery or any other booster source with an output greater than 12 Volts. Do not allow cable clamps to touch each other.**
- **Battery posts, terminals, and related accessories contain lead and lead compounds. Wash hands after handling.**

CAUTION!

- **It is essential when replacing the cables on the battery that the positive cable is attached to the positive post and the negative cable is attached to the negative post. Battery posts are marked positive (+) and negative (-) and are identified on the battery case. Cable clamps should be tight on the terminal posts and free of corrosion.**
- **If a "fast charger" is used while the battery is in the vehicle, disconnect both vehicle battery cables before connecting the charger to the battery. Do not use a "fast charger" to provide starting voltage.**

DEALER SERVICE

Your authorized dealer has the qualified service personnel, special tools, and equipment to perform all service operations in an expert manner. Service Manuals are available which include detailed service information for your vehicle. Refer to these Service Manuals before attempting any procedure yourself.

NOTE: Intentional tampering with emissions control systems may void your warranty and could result in civil penalties being assessed against you.

WARNING!

You can be badly injured working on or around a motor vehicle. Only do service work for which you have the knowledge and the proper equipment. If you have any doubt about your ability to perform a service job, take your vehicle to a competent mechanic.

Engine Oil

Change Engine Oil

The oil change indicator system will remind you that it is time to take your vehicle in for scheduled maintenance. Refer to the "Maintenance Plan" for further information.

NOTE: Under no circumstances should oil change intervals exceed 10,000 miles (16,000 km), twelve months or 350 hours of engine run time, whichever comes first. The 350 hours of engine run or idle time is generally only a concern for fleet customers.

Engine Oil Selection

For best performance and maximum protection under all types of operating conditions, the manufacturer only recommends engine oils that are API Certified and meet the requirements of FCA Material Standard MS-6395.

American Petroleum Institute (API) Engine Oil Identification Symbol

This symbol means that the oil has been certified by the American Petroleum Institute (API). The manufacturer only recommends API Certified engine oils.

This symbol certifies 0W-20, 5W-20, 0W-30, 5W-30 and 10W-30 engine oils.

CAUTION!

Do not use chemical flushes in your engine oil as the chemicals can damage your engine. Such damage is not covered by the New Vehicle Limited Warranty.

Engine Oil Viscosity (SAE Grade) — 2.4L Engine

Mopar SAE 5W-20 engine oil or equivalent Pennzoil or Shell Helix is recommended for all operating temperatures. This engine oil improves low temperature starting and vehicle fuel economy.

The engine oil filler cap also shows the recommended engine oil viscosity for your engine. For information on the engine oil filler cap location, refer to “Engine Compartment” in “Servicing And Maintenance”.

Lubricants that do not have both, the engine oil certification mark and the correct SAE viscosity grade number should not be used.

Engine Oil Viscosity (SAE Grade) — 3.6L Engine

Mopar SAE 5W-20 engine oil approved to FCA Material Standard MS-6395 such as Pennzoil, Shell Helix Ultra or equivalent is recommended for all operating temperatures. This engine oil improves low temperature starting and vehicle fuel economy.

The engine oil filler cap also shows the recommended engine oil viscosity for your engine. For information on engine oil filler cap location, refer to the “Engine Compartment” illustration in this section.

NOTE: Mopar SAE 5W-30 engine oil approved to FCA Material Standard MS-6395 such as Pennzoil, Shell Helix Ultra or equivalent may be used when SAE 5W-20 engine oil meeting MS-6395 is not available.

Lubricants which do not have both the engine oil certification mark and the correct SAE viscosity grade number should not be used.

Synthetic Engine Oils

You may use synthetic engine oils provided the recommended oil quality requirements are met, and the recommended maintenance intervals for oil and filter changes are followed.

Synthetic engine oils which do not have both the engine oil certification mark and the correct SAE viscosity grade number should not be used.

Materials Added To Engine Oil

The manufacturer strongly recommends against the addition of any additives (other than leak detection dyes) to the engine oil. Engine oil is an engineered product and its performance may be impaired by supplemental additives.

Disposing Of Used Engine Oil And Oil Filters

Care should be taken in disposing of used engine oil and oil filters from your vehicle. Used oil and oil filters, indiscriminately discarded, can present a problem to the environment. Contact an authorized dealer, service station or governmental agency for advice on how and where used oil and oil filters can be safely discarded in your area.

Engine Oil Filter

The engine oil filter should be replaced with a new filter at every engine oil change.

Engine Oil Filter Selection

This manufacturer's engines have a full-flow type disposable oil filter. Use a filter of this type for replacement. The quality of replacement filters varies considerably. Only high quality filters should be used to assure most efficient service. Mopar engine oil filters are high quality oil filters and are recommended.

Engine Air Cleaner Filter

Refer to the "Maintenance Plan" in this section for the proper maintenance intervals.

NOTE: Be sure to follow the "Severe Duty Conditions" maintenance interval if applicable.

WARNING!

The air induction system (air cleaner, hoses, etc.) can provide a measure of protection in the case of engine backfire. Do not remove the air induction system (air cleaner, hoses, etc.) unless such removal is necessary for repair or maintenance. Make sure that no one is near the engine compartment before starting the vehicle with the air induction system (air cleaner, hoses, etc.) removed. Failure to do so can result in serious personal injury.

Engine Air Cleaner Filter Selection

The quality of replacement engine air cleaner filters varies considerably. Only high quality filters should be used to assure most efficient service. Mopar engine air cleaner filters are a high quality filter and are recommended.

Air Conditioner Maintenance

For best possible performance, your air conditioner should be checked and serviced by an authorized dealer at the start of each warm season. This service should include cleaning of the condenser fins and a performance test. Drive belt tension should also be checked at this time.

WARNING!

- **Use only refrigerants and compressor lubricants approved by the manufacturer for your air conditioning system. Some unapproved refrigerants are flammable and can explode, injuring you. Other unapproved refrigerants or lubricants can cause the system to fail, requiring costly repairs. Refer to Warranty Information Book, for further warranty information.**
- **The air conditioning system contains refrigerant under high pressure. To avoid risk of personal injury or damage to the system, adding refrigerant or any repair requiring lines to be disconnected should be done by an experienced technician.**

CAUTION!

Do not use chemical flushes in your air conditioning system as the chemicals can damage your air conditioning components. Such damage is not covered by the New Vehicle Limited Warranty.

Refrigerant Recovery And Recycling — R–1234yf

R–1234yf Air Conditioning Refrigerant is a hydrofluoroolefin (HFO) that is endorsed by the Environmental Protection Agency and is an ozone-friendly substance with a low global-warming potential. The manufacturer recommends that air conditioning service be performed by an authorized dealer using recovery and recycling equipment.

NOTE: Use only manufacturer approved A/C system PAG compressor oil, and refrigerants.

Accessory Drive Belt Inspection

WARNING!

- **Do not attempt to inspect an accessory drive belt with vehicle running.**
- **When working near the radiator cooling fan, disconnect the fan motor lead. The fan is temperature controlled and can start at any time regardless of ignition mode. You could be injured by the moving fan blades.**
- **You can be badly injured working on or around a motor vehicle. Only do service work for which you have the knowledge and the proper equipment. If**

(Continued)

WARNING! *(Continued)*

you have any doubt about your ability to perform a service job, take your vehicle to a competent mechanic.

When inspecting accessory drive belts, small cracks that run across ribbed surface of belt from rib to rib, are considered normal. These are not a reason to replace belt. However, cracks running along a rib (not across) are not normal. Any belt with cracks running along a rib must be replaced. Also have the belt replaced if it has excessive wear, frayed cords or severe glazing.

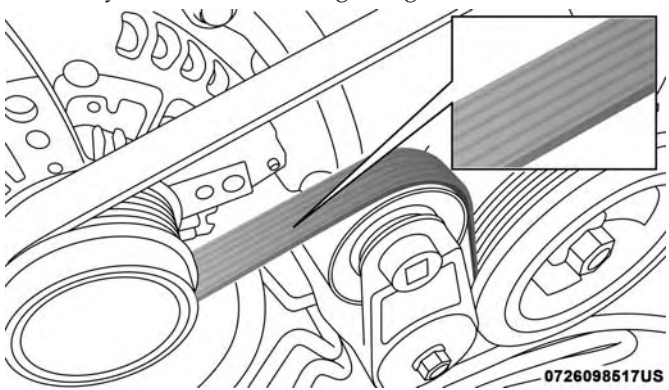

Accessory Belt (Serpentine Belt)

Conditions that would require replacement:

- Rib chunking (one or more ribs has separated from belt body)
- Rib or belt wear
- Longitudinal belt cracking (cracks between two ribs)
- Belt slips
- "Groove jumping" (belt does not maintain correct position on pulley)
- Belt broken (note: identify and correct problem before new belt is installed)
- Noise (objectionable squeal, squeak, or rumble is heard or felt while drive belt is in operation)

Some conditions can be caused by a faulty component such as a belt pulley. Belt pulleys should be carefully inspected for damage and proper alignment.

Belt replacement on some models requires the use of special tools, we recommend having your vehicle serviced at an authorized dealer.

Body Lubrication

Locks and all body pivot points, including such items as seat tracks, door hinge pivot points and rollers, liftgate, tailgate, decklid, sliding doors and hood hinges, should be lubricated periodically with a lithium based grease, such as Mopar Spray White Lube to assure quiet, easy operation and to protect against rust and wear. Prior to the application of any lubricant, the parts concerned should be wiped clean to remove dust and grit; after lubricating excess oil and grease should be removed. Particular attention should also be given to hood latching components to ensure proper function. When performing other underhood services, the hood latch, release mechanism and safety catch should be cleaned and lubricated.

The external lock cylinders should be lubricated twice a year, preferably in the Fall and Spring. Apply a small amount of a high quality lubricant, such as Mopar Lock Cylinder Lubricant directly into the lock cylinder.

Windshield Wiper Blades

Clean the rubber edges of the wiper blades and the windshield periodically with a sponge or soft cloth and a mild nonabrasive cleaner. This will remove accumulations of salt or road film.

Operation of the wipers on dry glass for long periods may cause deterioration of the wiper blades. Always use washer fluid when using the wipers to remove salt or dirt from a dry windshield.

Avoid using the wiper blades to remove frost or ice from the windshield. Keep the blade rubber out of contact with petroleum products such as engine oil, gasoline, etc.

NOTE: Life expectancy of wiper blades varies depending on geographical area and frequency of use. Poor performance of blades may be present with chattering, marks, water lines or wet spots. If any of these conditions are present, clean the wiper blades or replace as necessary.

Rear Wiper Blade Removal/Installation

1. Lift the pivot cap on the rear wiper arm upward, this will allow the rear wiper blade to be raised off of the liftgate glass.

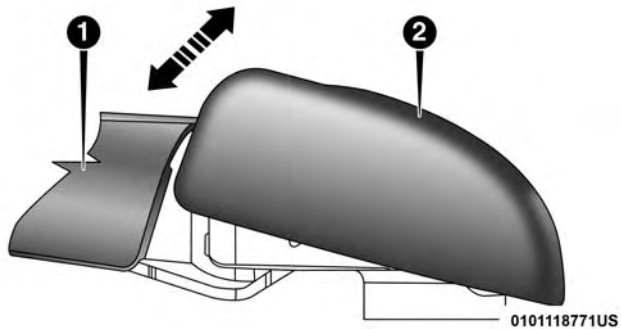

Lifting The Pivot Cap

1 — Wiper Arm
2 — Pivot Cap

NOTE: The rear wiper arm cannot be raised fully upward unless the pivot cap is raised first.

2. Lift the rear wiper arm upward to raise the wiper blade off of the liftgate glass.
3. Grab the bottom of the wiper blade and rotate it forward to unsnap the blade pivot pin from the wiper blade holder.

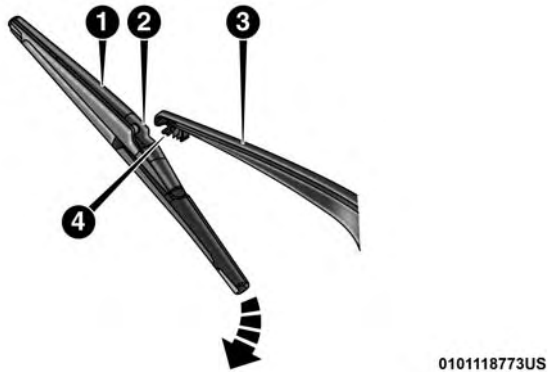

Removing The Wiper Blade

1 — Wiper Blade	3 — Wiper Arm
2 — Blade Pivot Pin	4 — Wiper Blade Holder

4. Install the wiper blade pivot pin into the wiper blade holder at the end of the wiper arm, and firmly press the wiper blade until it snaps into place.
5. Lower the wiper blade and snap the pivot cap into place.

Exhaust System

The best protection against carbon monoxide entry into the vehicle body is a properly maintained engine exhaust system.

If you notice a change in the sound of the exhaust system; or if the exhaust fumes can be detected inside the vehicle; or when the underside or rear of the vehicle is damaged; have an authorized technician inspect the complete exhaust system and adjacent body areas for broken, damaged, deteriorated, or mispositioned parts. Open seams or loose connections could permit exhaust fumes to seep into the passenger compartment. In addition, have the exhaust system inspected each time the vehicle is raised for lubrication or oil change. Replace as required.

WARNING!

- **Exhaust gases can injure or kill. They contain carbon monoxide (CO), which is colorless and odorless. Breathing it can make you unconscious and can eventually poison you. To avoid breathing CO, refer to "Safety Tips" in "Safety" for further information.**
- **A hot exhaust system can start a fire if you park over materials that can burn. Such materials might be**

(Continued)

WARNING! *(Continued)*

grass or leaves coming into contact with your exhaust system. Do not park or operate your vehicle in areas where your exhaust system can contact anything that can burn.

CAUTION!

- **The catalytic converter requires the use of unleaded fuel only. Leaded gasoline will destroy the effectiveness of the catalyst as an emissions control device and may seriously reduce engine performance and cause serious damage to the engine.**
- **Damage to the catalytic converter can result if your vehicle is not kept in proper operating condition. In the event of engine malfunction, particularly involving engine misfire or other apparent loss of performance, have your vehicle serviced promptly. Continued operation of your vehicle with a severe malfunction could cause the converter to overheat, resulting in possible damage to the converter and vehicle.**

Under normal operating conditions, the catalytic converter will not require maintenance. However, it is important to keep the engine properly tuned to assure proper catalyst operation and prevent possible catalyst damage.

NOTE: Intentional tampering with emissions control systems can result in civil penalties being assessed against you.

In unusual situations involving grossly malfunctioning engine operation, a scorching odor may suggest severe and abnormal catalyst overheating. If this occurs, stop the vehicle, turn off the engine and allow it to cool. Service, including a tune-up to manufacturer's specifications, should be obtained immediately.

To minimize the possibility of catalytic converter damage:

- Do not interrupt the ignition when the transmission is in gear and the vehicle is in motion.
- Do not try to start the vehicle by pushing or towing the vehicle.
- Do not idle the engine with any ignition components disconnected or removed, such as when diagnostic testing, or for prolonged periods during very rough idle or malfunctioning operating conditions.

Cooling System

WARNING!

- **You or others can be badly burned by hot engine coolant (antifreeze) or steam from your radiator. If you see or hear steam coming from under the hood, do not open the hood until the radiator has had time to cool. Never open a cooling system pressure cap when the radiator or coolant bottle is hot.**
- **Keep hands, tools, clothing, and jewelry away from the radiator cooling fan when the hood is raised. The fan starts automatically and may start at any time, whether the engine is running or not.**
- **When working near the radiator cooling fan, disconnect the fan motor lead or turn the ignition to the OFF mode. The fan is temperature controlled and can start at any time the ignition is in the ON mode.**

Coolant Checks

Check the engine coolant (antifreeze) protection every 12 months (before the onset of freezing weather, where applicable). If the engine coolant (antifreeze) is dirty or rusty in appearance, the system should be drained, flushed, and refilled with fresh engine coolant (antifreeze). Check the front of the A/C condenser for any accumulation of bugs, leaves, etc. If dirty, clean by gently spraying water from a garden hose vertically down the face of the condenser.

Check the coolant recovery bottle tubing for brittle rubber, cracking, tears, cuts, and tightness of the connection at the bottle and radiator. Inspect the entire system for leaks.

WARNING!

- **The warning words "DO NOT OPEN HOT" on the cooling system pressure cap are a safety precaution. Never add engine coolant (antifreeze) when the engine is overheated. Do not loosen or remove the cap to cool an overheated engine. Heat causes pressure to build up in the cooling system. To prevent scalding or injury, do not remove the pressure cap while the system is hot or under pressure.**
- **Do not use a pressure cap other than the one specified for your vehicle. Personal injury or engine damage may result.**

Cooling System — Drain, Flush And Refill

NOTE: Some vehicles require special tools to add coolant properly. Failure to fill these systems properly could lead to severe internal engine damage. If any coolant is needed to be added to the system please contact your local authorized dealer.

If the engine coolant (antifreeze) is dirty or contains visible sediment, have an authorized dealer clean and flush with OAT coolant (antifreeze) (conforming to MS.90032).

Refer to the "Maintenance Plan" in this section for the proper maintenance intervals.

Selection Of Coolant

Refer to "Fluids And Lubricants" in "Technical Specifications" for further information.

NOTE:

- Mixing of engine coolant (antifreeze) other than specified Organic Additive Technology (OAT) engine coolant (antifreeze), may result in engine damage and may decrease corrosion protection. Organic Additive Technology (OAT) engine coolant is different and should not be mixed with Hybrid Organic Additive Technology (HOAT) engine coolant (antifreeze) or any "globally compatible" coolant (antifreeze). If a non-OAT engine coolant (antifreeze) is introduced into the cooling system in an emergency, the cooling system will need to be drained, flushed, and refilled with fresh OAT coolant (conforming to MS.90032), by an authorized dealer as soon as possible.
- Do not use water alone or alcohol-based engine coolant (antifreeze) products. Do not use additional rust inhibitors or antirust products, as they may not be compatible with the radiator engine coolant and may plug the radiator.
- This vehicle has not been designed for use with propylene glycol-based engine coolant (antifreeze). Use of propylene glycolbased engine coolant (antifreeze) is not recommended.

- Some vehicles require special tools to add coolant properly. Failure to fill these systems properly could lead to severe internal engine damage. If any coolant is needed to be added to the system please contact your local authorized dealer.

Adding Coolant

Your vehicle has been built with an improved engine coolant (OAT coolant conforming to MS.90032) that allows extended maintenance intervals. This engine coolant (antifreeze) can be used up to ten years or 150,000 miles (240,000 km) before replacement. To prevent reducing this extended maintenance period, it is important that you use the same engine coolant (OAT coolant conforming to MS.90032) throughout the life of your vehicle.

Please review these recommendations for using Organic Additive Technology (OAT) engine coolant (antifreeze) that meets the requirements of FCA Material Standard MS.90032. When adding engine coolant (antifreeze):

- We recommend using Mopar Antifreeze/Coolant 10 Year/150,000 Mile (240,000 km) Formula OAT (Organic Additive Technology) that meets the requirements of FCA Material Standard MS.90032.
- Mix a minimum solution of 50% OAT engine coolant that meets the requirements of FCA Material Standard MS.90032 and distilled water. Use higher concentrations (not to exceed 70%) if temperatures below –34°F (–37°C) are anticipated. Please contact an authorized dealer for assistance.
- Use only high purity water such as distilled or deionized water when mixing the water/engine coolant (antifreeze) solution. The use of lower quality water will reduce the amount of corrosion protection in the engine cooling system.

NOTE:

- It is the owner's responsibility to maintain the proper level of protection against freezing according to the temperatures occurring in the area where the vehicle is operated.
- Some vehicles require special tools to add coolant properly. Failure to fill these systems properly could lead to severe internal engine damage. If any coolant is needed to be added to the system, please contact a local authorized dealer.
- Mixing engine coolant (antifreeze) types is not recommended and can result in cooling system damage. If

HOAT and OAT coolant are mixed in an emergency, have a authorized dealer drain, flush, and refill with OAT coolant (conforming to MS.90032) as soon as possible.

Cooling System Pressure Cap

The cap must be fully tightened to prevent loss of engine coolant (antifreeze), and to ensure that engine coolant (antifreeze) will return to the radiator from the coolant recovery bottle.

The cap should be inspected and cleaned if there is any accumulation of foreign material on the sealing surfaces.

WARNING!

- **The warning words "DO NOT OPEN HOT" on the cooling system pressure cap are a safety precaution. Never add engine coolant (antifreeze) when the engine is overheated. Do not loosen or remove the cap to cool an overheated engine. Heat causes pressure to build up in the cooling system. To prevent scalding or injury, do not remove the pressure cap while the system is hot or under pressure.**

(Continued)

WARNING! ***(Continued)***

- **Do not use a pressure cap other than the one specified for your vehicle. Personal injury or engine damage may result.**

Disposal Of Used Coolant

Used ethylene glycol-based coolant (antifreeze) is a regulated substance requiring proper disposal. Check with your local authorities to determine the disposal rules for your community. To prevent ingestion by animals or children, do not store ethylene glycol-based coolant in open containers or allow it to remain in puddles on the ground. If ingested by a child or pet, seek emergency assistance immediately. Clean up any ground spills immediately.

Coolant Level

2.4L Engine — The coolant bottle provides a quick visual method for determining that the coolant level is adequate. With the engine idling and warm to normal operating temperature, the level of the coolant in the bottle should be between the "ADD" and "FULL" lines, shown on the bottle.

3.6L Engine — The level of the coolant in the pressurized coolant bottle should be between the "COLD" and "FULL" range on the bottle when the engine is cold.

The radiator normally remains completely full, so there is no need to remove the radiator cap unless checking for coolant freeze point or replacing engine coolant (antifreeze). Advise your service attendant of this. As long as the engine operating temperature is satisfactory, the coolant bottle need only be checked once a month. When additional engine coolant (antifreeze) is needed to maintain the proper level, it should be added to the coolant bottle. Do not overfill. See "Adding Coolant" section for additional information.

Points To Remember

NOTE: When the vehicle is stopped after a few miles/kilometers of operation, you may observe vapor coming from the front of the engine compartment. This is normally a result of moisture from rain, snow, or high humidity accumulating on the radiator and being vaporized when the thermostat opens, allowing hot engine coolant (antifreeze) to enter the radiator.

If an examination of your engine compartment shows no evidence of radiator or hose leaks, the vehicle may be safely driven. The vapor will soon dissipate.

- Do not overfill the coolant expansion bottle.
- Check the coolant freeze point in the radiator and in the coolant expansion bottle. If engine coolant (antifreeze) needs to be added, the contents of the coolant expansion bottle must also be protected against freezing.
- If frequent engine coolant (antifreeze) additions are required, the cooling system should be pressure tested for leaks.
- Maintain engine coolant (antifreeze) concentration at a minimum of 50% OAT coolant (conforming to MS.90032) and distilled water for proper corrosion protection of your engine which contains aluminum components.
- Make sure that the coolant expansion bottle overflow hoses are not kinked or obstructed.
- Keep the front of the radiator clean. If your vehicle is equipped with air conditioning, keep the front of the condenser clean.
- Do not change the thermostat for Summer or Winter operation. If replacement is ever necessary, install ONLY the correct type thermostat. Other designs may result in unsatisfactory engine coolant (antifreeze) performance, poor gas mileage, and increased emissions.

Brake System

In order to assure brake system performance, all brake system components should be inspected periodically. Refer to the "Maintenance Plan" in this section for the proper maintenance intervals.

WARNING!

Riding the brakes can lead to brake failure and possibly a collision. Driving with your foot resting or riding on the brake pedal can result in abnormally high brake temperatures, excessive lining wear, and possible brake damage. You would not have your full braking capacity in an emergency.

Master Cylinder — Brake Fluid Level Check

Check the fluid level in the master cylinder immediately if the "Brake Warning Light" indicates system failure.

Check the fluid level in the master cylinder when performing underhood services.

Clean the top of the master cylinder area before removing the cap. If necessary, add fluid to bring the fluid level up to the requirements described on the brake fluid reservoir.

Overfilling of fluid is not recommended because it may cause leaking in the system.

Fluid level can be expected to fall as the brake pads wear. Brake fluid level should be checked when pads are replaced. However, low fluid level may be caused by a leak and a checkup may be needed.

Use only manufacturer's recommended brake fluid. Refer to "Fluids And Lubricants" in "Technical Specifications" for further information.

WARNING!

- **Use only manufacturer's recommended brake fluid. Refer to "Fluids And Lubricants" in "Technical Specifications" for further information. Using the wrong type of brake fluid can severely damage your brake system and/or impair its performance. The proper type of brake fluid for your vehicle is also identified on the original factory installed hydraulic master cylinder reservoir.**
- **To avoid contamination from foreign matter or moisture, use only new brake fluid or fluid that has been**

(Continued)

WARNING! *(Continued)*

in a tightly closed container. Keep the master cylinder reservoir cap secured at all times. Brake fluid in a open container absorbs moisture from the air resulting in a lower boiling point. This may cause it to boil unexpectedly during hard or prolonged braking, resulting in sudden brake failure. This could result in a collision.

- **Overfilling the brake fluid reservoir can result in spilling brake fluid on hot engine parts, causing the brake fluid to catch fire. Brake fluid can also damage painted and vinyl surfaces, care should be taken to avoid its contact with these surfaces.**
- **Do not allow petroleum based fluid to contaminate the brake fluid. Brake seal components could be damaged, causing partial or complete brake failure. This could result in a collision.**

Automatic Transmission

Selection Of Lubricant

It is important to use the proper transmission fluid to ensure optimum transmission performance and life. Use only the manufacturer's specified transmission fluid. Refer to "Fluids And Lubricants" in "Technical Specifications" for fluid specifications. It is important to maintain the transmission fluid at the correct level using the recommended fluid.

NOTE: No chemical flushes should be used in any transmission; only the approved lubricant should be used.

CAUTION!

Using a transmission fluid other than the manufacturer's recommended fluid may cause deterioration in transmission shift quality and/or torque converter shudder, and will require more frequent fluid and filter changes. Refer to "Fluids And Lubricants" in "Technical Specifications" for fluid specifications.

Special Additives

The manufacturer strongly recommends against using any special additives in the transmission. Automatic Transmission Fluid (ATF) is an engineered product and its performance may be impaired by supplemental additives. Therefore, do not add any fluid additives to the transmission. The only exception to this policy is the use of special dyes for diagnosing fluid leaks. Avoid using transmission sealers as they may adversely affect seals.

CAUTION!

Do not use chemical flushes in your transmission as the chemicals can damage your transmission components. Such damage is not covered by the New Vehicle Limited Warranty.

Fluid Level Check — Four-Speed Automatic Transmission

Use the following procedure to check the transmission fluid level properly:

1. Park the vehicle on level ground.
2. Run the engine at normal idle speed for at least 60 seconds, and leave the engine running for the rest of this procedure.
3. Fully apply the parking brake, and press the brake pedal.
4. Place the gear selector momentarily into each gear position (allowing time for the transmission to fully engage in each position), ending with the transmission in PARK.
5. Wipe the area around the dipstick clean to prevent dirt from entering the transmission.
6. Remove the dipstick and determine if the fluid is hot or cold. You can also read the transmission fluid temperature using the instrument cluster. Refer to "Instrument Cluster Display" in "Getting To Know Your Instrument Panel" for further information. Hot fluid is approximately 180°F (82°C), which is the normal operating temperature after the vehicle is driven at least 15 miles (24 km). Hot fluid cannot be held comfortably between the fingertips. Cold fluid is at a temperature of approximately 80°F (27°C).
7. Wipe the dipstick clean and reinsert it until seated. Then, remove the dipstick and note the fluid level on both sides. The fluid level reading is only valid if there is a solid coating of oil on both sides of the dipstick. Note that the holes in the dipstick will be full of fluid if the actual level is at or above the hole.
   - If the fluid is hot, the fluid level should be in the crosshatched area marked "HOT" (between the upper two holes in the dipstick).
   - If the fluid is cold, the fluid level should be between the lower two holes in the area marked "COLD".

If the fluid level is low, add fluid through the dipstick tube to bring it to the proper level. Do not overfill. After adding any quantity of oil through the dipstick tube, wait at least two minutes for the oil to fully drain into the transmission before rechecking the fluid level.

NOTE: If it is necessary to check the transmission below the operating temperature, the fluid level should be between the two COLD (lower) holes on the dipstick with the fluid at approximately 80°F (27°C). If the fluid level is correctly established at 80°F (27°C), it should be between the HOT (upper) reference holes when the transmission reaches 180°F (82°C). Remember it is best to check the level at the normal operating temperature.

8. Check for leaks. Release the parking brake.

CAUTION!

- **Using a transmission fluid other than the manufacturer's recommended fluid may cause deterioration in transmission shift quality and/or torque converter**

(Continued)

CAUTION! *(Continued)*

shudder, and will require more frequent fluid and filter changes. Refer to "Fluids And Lubricants" in "Technical Specifications" for fluid specifications.

- **Dirt and water in the transmission can cause serious damage. To prevent dirt and water from entering the transmission after checking or replenishing fluid, make sure that the dipstick cap is re-seated properly.**

Fluid Level Check — Six-Speed Automatic Transmission

The fluid level is preset at the factory and does not require adjustment under normal operating conditions. Routine fluid level checks are not required, therefore the transmission filler tube is capped and no dipstick is provided. An authorized dealer can check your transmission fluid level using a special service dipstick. If you notice fluid leakage or transmission malfunction, visit an authorized dealer immediately to have the transmission fluid level checked. Operating the vehicle with an improper fluid level can cause severe transmission damage.

CAUTION!

If a transmission fluid leak occurs, visit an authorized dealer immediately. Severe transmission damage may occur. An authorized dealer has the proper tools to adjust the fluid level accurately.

Fluid And Filter Changes

Refer to the "Maintenance Plan" in this section for the proper maintenance intervals.

In addition, change the fluid and filter if the fluid becomes contaminated (with water, etc.), or if the transmission is disassembled for any reason.

Rear Drive Assembly (RDA) – AWD Models Only

Lubricant Selection

Use only the manufacturer's recommended fluid. Refer to "Fluids And Lubricants" in "Technical Specifications" for further information.

Fluid Level Check

Visually inspect the unit at each oil change for leakage. If leakage is detected, check the fluid level by removing the fill plug. The fluid level should be maintained between the bottom of the fill hole to 1/8 inch (4 mm) below the fill hole.

Add fluid, if necessary, to maintain the proper level.

Frequency Of Fluid Change

Refer to the "Maintenance Plan" in this section for the proper maintenance intervals.

Power Transfer Unit (PTU) – AWD Models Only

Lubricant Selection

Use only the manufacturer's recommended fluid. Refer to "Fluids And Lubricants" in "Technical Specifications" for further information.

Fluid Level Check

Visually inspect the unit at each oil change for leakage. If leakage is detected, check the fluid level by removing the fill plug. The fluid level should be maintained between the bottom of the fill hole to 1/8 inch (4 mm) below the fill hole.

Add fluid, if necessary, to maintain the proper level.

Frequency Of Fluid Change

Refer to the "Maintenance Plan" in this section for the proper maintenance intervals.

RAISING THE VEHICLE

In the case where it is necessary to raise the vehicle, go to an authorized dealer or service station.

TIRES

Tire Safety Information

Tire safety information will cover aspects of the following information: Tire Markings, Tire Identification Numbers, Tire Terminology and Definitions, Tire Pressures, and Tire Loading.

Tire Markings

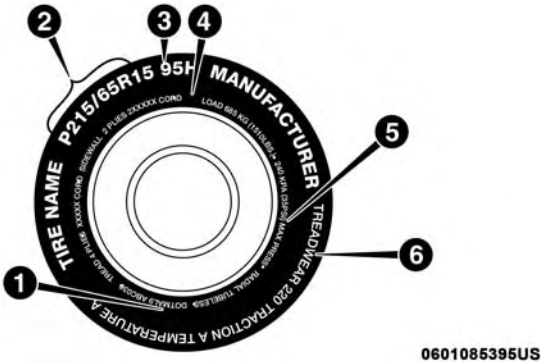

Tire Markings

1 — U.S. DOT Safety Standards Code (TIN)	4 — Maximum Load
2 — Size Designation	5 — Maximum Pressure
3 — Service Description	6 — Treadwear, Traction and Temperature Grades

NOTE:

- P (Passenger) — Metric tire sizing is based on U.S. design standards. P-Metric tires have the letter "P" molded into the sidewall preceding the size designation. Example: P215/65R15 95H.
- European — Metric tire sizing is based on European design standards. Tires designed to this standard have the tire size molded into the sidewall beginning with the section width. The letter "P" is absent from this tire size designation. Example: 215/65R15 96H.
- LT (Light Truck) — Metric tire sizing is based on U.S. design standards. The size designation for LT-Metric tires is the same as for P-Metric tires except for the letters "LT" that are molded into the sidewall preceding the size designation. Example: LT235/85R16.
- Temporary spare tires are designed for temporary emergency use only. Temporary high pressure compact spare tires have the letter "T" or "S" molded into the sidewall preceding the size designation. Example: T145/80D18 103M.
- High flotation tire sizing is based on U.S. design standards and it begins with the tire diameter molded into the sidewall. Example: 31x10.5 R15 LT.

Tire Sizing Chart

EXAMPLE:

Example Size Designation: P215/65R15XL 95H, 215/65R15 96H, LT235/85R16C, T145/80D18 103M, 31x10.5 R15 LT
P = Passenger car tire size based on U.S. design standards, or **"....blank...."** = Passenger car tire based on European design standards, or **LT** = Light truck tire based on U.S. design standards, or **T or S** = Temporary spare tire or **31** = Overall diameter in inches (in)
215, 235, 145 = Section width in millimeters (mm)
65, 85, 80 = Aspect ratio in percent (%) – Ratio of section height to section width of tire, or **10.5** = Section width in inches (in)
R = Construction code – "R" means radial construction, or – "D" means diagonal or bias construction
15, 16, 18 = Rim diameter in inches (in)
Service Description:
95 = Load Index – A numerical code associated with the maximum load a tire can carry

EXAMPLE:
H = Speed Symbol – A symbol indicating the range of speeds at which a tire can carry a load corresponding to its load index under certain operating conditions – The maximum speed corresponding to the speed symbol should only be achieved under specified operating conditions (i.e., tire pressure, vehicle loading, road conditions, and posted speed limits)
Load Identification: Absence of the following load identification symbols on the sidewall of the tire indicates a Standard Load (SL) tire: • **XL** = Extra load (or reinforced) tire, or • **LL** = Light load tire or • **C, D, E, F, G** = Load range associated with the maximum load a tire can carry at a specified pressure
Maximum Load – Maximum load indicates the maximum load this tire is designed to carry
Maximum Pressure – Maximum pressure indicates the maximum permissible cold tire inflation pressure for this tire

Tire Identification Number (TIN)

The TIN may be found on one or both sides of the tire; however, the date code may only be on one side. Tires with white sidewalls will have the full TIN, including the date code, located on the white sidewall side of the tire. Look for the TIN on the outboard side of black sidewall tires as mounted on the vehicle. If the TIN is not found on the outboard side, then you will find it on the inboard side of the tire.

EXAMPLE:
DOT MA L9 ABCD 0301
DOT = Department of Transportation

EXAMPLE:
– This symbol certifies that the tire is in compliance with the U.S. Department of Transportation tire safety standards and is approved for highway use
MA = Code representing the tire manufacturing location (two digits)
L9 = Code representing the tire size (two digits)
ABCD = Code used by the tire manufacturer (one to four digits)
03 = Number representing the week in which the tire was manufactured (two digits) – 03 means the 3rd week
01 = Number representing the year in which the tire was manufactured (two digits) – 01 means the year 2001 – Prior to July 2000, tire manufacturers were only required to have one number to represent the year in which the tire was manufactured. Example: 031 could represent the 3rd week of 1981 or 1991

Tire Terminology And Definitions

Term	Definition
B-Pillar	The vehicle B-Pillar is the structural member of the body located behind the front door.
Cold Tire Inflation Pressure	Cold tire inflation pressure is defined as the tire pressure after the vehicle has not been driven for at least three hours, or driven less than 1 mile (1.6 km) after sitting for a minimum of three hours. Inflation pressure is measured in units of PSI (pounds per square inch) or kPa (kilopascals).

Term	Definition
Maximum Inflation Pressure	The maximum inflation pressure is the maximum permissible cold tire inflation pressure for this tire. The maximum inflation pressure is molded into the sidewall.
Recommended Cold Tire Inflation Pressure	Vehicle manufacturer's recommended cold tire inflation pressure as shown on the tire placard.
Tire Placard	A label permanently attached to the vehicle describing the vehicle's loading capacity, the original equipment tire sizes and the recommended cold tire inflation pressures.

Tire Loading And Tire Pressure

NOTE: The proper cold tire inflation pressure is listed on the driver's side B-Pillar or the rear edge of the driver's side door.

Check the inflation pressure of each tire, including the spare tire (if equipped), at least monthly and inflate to the recommended pressure for your vehicle.

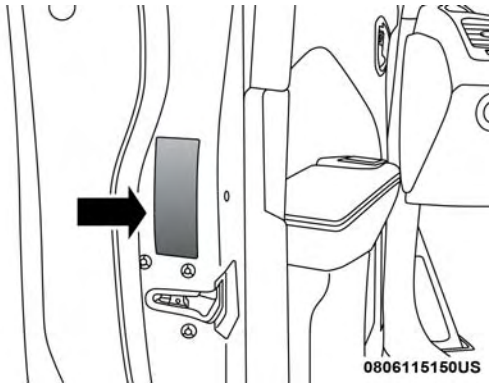

Example Tire Placard Location (Door)

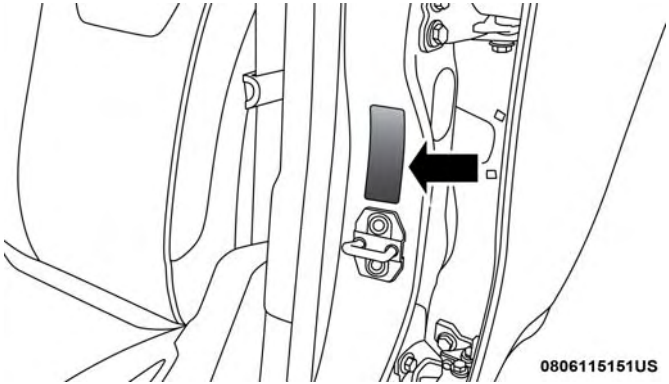

Example Tire Placard Location (B-Pillar)

Tire And Loading Information Placard

Tire And Loading Information Placard

This placard tells you important information about the:

1. Number of people that can be carried in the vehicle.
2. Total weight your vehicle can carry.
3. Tire size designed for your vehicle.
4. Cold tire inflation pressures for the front, rear, and spare tires.

Loading

The vehicle maximum load on the tire must not exceed the load carrying capacity of the tire on your vehicle. You will not exceed the tire's load carrying capacity if you adhere to the loading conditions, tire size, and cold tire inflation pressures specified on the Tire and Loading Information placard in "Vehicle Loading" in the "Starting And Operating" section of this manual.

NOTE: Under a maximum loaded vehicle condition, gross axle weight ratings (GAWRs) for the front and rear axles must not be exceeded.

For further information on GAWRs, vehicle loading, and trailer towing, refer to "Vehicle Loading" in the "Starting And Operating" section of this manual.

To determine the maximum loading conditions of your vehicle, locate the statement "The combined weight of occupants and cargo should never exceed XXX kg or XXX lbs" on the Tire and Loading Information placard. The combined weight of occupants, cargo/luggage and trailer tongue weight (if applicable) should never exceed the weight referenced here.

Steps For Determining Correct Load Limit—

(1) Locate the statement "The combined weight of occupants and cargo should never exceed XXX kg or XXX lbs." on your vehicle's placard.

(2) Determine the combined weight of the driver and passengers that will be riding in your vehicle.

(3) Subtract the combined weight of the driver and passengers from XXX kg or XXX lbs.

(4) The resulting figure equals the available amount of cargo and luggage load capacity. For example, if "XXX" amount equals 1400 lbs. and there will be five 150 lb passengers in your vehicle, the amount of available cargo and luggage load capacity is 650 lbs. (1400-750 (5x150) = 650 lbs.)

(5) Determine the combined weight of luggage and cargo being loaded on the vehicle. That weight may not safely exceed the available cargo and luggage load capacity calculated in Step 4.

(6) If your vehicle will be towing a trailer, load from your trailer will be transferred to your vehicle. Consult this manual to determine how this reduces the available cargo and luggage load capacity of your vehicle.

Metric Example For Load Limit

For example, if "XXX" amount equals 635 kg and there will be five 68 kg passengers in your vehicle, the amount of available cargo and luggage load capacity is 295 kg (635-340 (5x68) = 295 kg) as shown in step 4.

NOTE:

- If your vehicle will be towing a trailer, load from your trailer will be transferred to your vehicle. The following table shows examples on how to calculate total load, cargo/luggage, and towing capacities of your vehicle with varying seating configurations and number and size of occupants. This table is for illustration purposes only and may not be accurate for the seating and load carry capacity of your vehicle.
- For the following example, the combined weight of occupants and cargo should never exceed 865 lbs (392 kg).

Occupants			Combined weight of occupants and cargo from Tire Placard	MINUS	Combined Occupant's weight	=	AVAILABLE Cargo/Luggage and Trailer Tongue Weight
TOTAL	FRONT	REAR					
EXAMPLE 1							
5	2	3			Occupant 1: 200 lbs Occupant 2: 130 lbs Occupant 3: 160 lbs Occupant 4: 100 lbs Occupant 5: 80 lbs TOTAL WEIGHT: 670 lbs		
			865 lbs	minus	670 lbs	=	195 lbs
EXAMPLE 2							
3	2	1			Occupant 1: 210 lbs Occupant 2: 180 lbs Occupant 3: 150 lbs TOTAL WEIGHT: 540 lbs		
			865 lbs	minus	540 lbs	=	325 lbs
EXAMPLE 3							
2	2	0			Occupant 1: 200 lbs Occupant 2: 200 lbs TOTAL WEIGHT: 400 lbs		
			865 lbs	minus	400 lbs	=	465 lbs

EXAMPLE

811a4d11

WARNING!

Overloading of your tires is dangerous. Overloading can cause tire failure, affect vehicle handling, and increase your stopping distance. Use tires of the recommended load capacity for your vehicle. Never overload them.

Tires — General Information

Tire Pressure

Proper tire inflation pressure is essential to the safe and satisfactory operation of your vehicle. Four primary areas are affected by improper tire pressure:

- Safety and Vehicle Stability
- Economy

- Tread Wear
- Ride Comfort

Safety

WARNING!

- **Improperly inflated tires are dangerous and can cause collisions.**
- **Underinflation increases tire flexing and can result in overheating and tire failure.**
- **Overinflation reduces a tire's ability to cushion shock. Objects on the road and chuckholes can cause damage that result in tire failure.**
- **Overinflated or underinflated tires can affect vehicle handling and can fail suddenly, resulting in loss of vehicle control.**
- **Unequal tire pressures can cause steering problems. You could lose control of your vehicle.**
- **Unequal tire pressures from one side of the vehicle to the other can cause the vehicle to drift to the right or left.**
- **Always drive with each tire inflated to the recommended cold tire inflation pressure.**

Both under-inflation and over-inflation affect the stability of the vehicle and can produce a feeling of sluggish response or over responsiveness in the steering.

NOTE:

- Unequal tire pressures from side to side may cause erratic and unpredictable steering response.
- Unequal tire pressure from side to side may cause the vehicle to drift left or right.

Fuel Economy

Underinflated tires will increase tire rolling resistance resulting in higher fuel consumption.

Tread Wear

Improper cold tire inflation pressures can cause abnormal wear patterns and reduced tread life, resulting in the need for earlier tire replacement.

Ride Comfort And Vehicle Stability

Proper tire inflation contributes to a comfortable ride. Over-inflation produces a jarring and uncomfortable ride.

Tire Inflation Pressures

The proper cold tire inflation pressure is listed on the driver's side B-Pillar or rear edge of the driver's side door.

At least once a month:

- Check and adjust tire pressure with a good quality pocket-type pressure gauge. Do not make a visual judgement when determining proper inflation. Tires may look properly inflated even when they are under-inflated.
- Inspect tires for signs of tire wear or visible damage.

CAUTION!

After inspecting or adjusting the tire pressure, always reinstall the valve stem cap. This will prevent moisture and dirt from entering the valve stem, which could damage the valve stem.

Inflation pressures specified on the placard are always "cold tire inflation pressure". Cold tire inflation pressure is defined as the tire pressure after the vehicle has not been driven for at least three hours, or driven less than 1 mile (1.6 km) after sitting for a minimum of three hours. The cold tire inflation pressure must not exceed the maximum inflation pressure molded into the tire sidewall.

Check tire pressures more often if subject to a wide range of outdoor temperatures, as tire pressures vary with temperature changes.

Tire pressures change by approximately 1 psi (7 kPa) per 12°F (7°C) of air temperature change. Keep this in mind when checking tire pressure inside a garage, especially in the Winter.

Example: If garage temperature = 68°F (20°C) and the outside temperature = 32°F (0°C) then the cold tire inflation pressure should be increased by 3 psi (21 kPa), which equals 1 psi (7 kPa) for every 12°F (7°C) for this outside temperature condition.

Tire pressure may increase from 2 to 6 psi (13 to 40 kPa) during operation. DO NOT reduce this normal pressure build up or your tire pressure will be too low.

Tire Pressures For High Speed Operation

The manufacturer advocates driving at safe speeds and within posted speed limits. Where speed limits or conditions are such that the vehicle can be driven at high speeds, maintaining correct tire inflation pressure is very important. Increased tire pressure and reduced vehicle loading

may be required for high-speed vehicle operation. Refer to your authorized tire dealer or original equipment vehicle dealer for recommended safe operating speeds, loading and cold tire inflation pressures.

WARNING!

High speed driving with your vehicle under maximum load is dangerous. The added strain on your tires could cause them to fail. You could have a serious collision. Do not drive a vehicle loaded to the maximum capacity at continuous speeds above 75 mph (120 km/h).

Radial Ply Tires

WARNING!

Combining radial ply tires with other types of tires on your vehicle will cause your vehicle to handle poorly. The instability could cause a collision. Always use radial ply tires in sets of four. Never combine them with other types of tires.

Tire Repair

If your tire becomes damaged, it may be repaired if it meets the following criteria:

- The tire has not been driven on when flat.
- The damage is only on the tread section of your tire (sidewall damage is not repairable).
- The puncture is no greater than a ¼ of an inch (6 mm).

Consult an authorized tire dealer for tire repairs and additional information.

Damaged Run Flat tires, or Run Flat tires that have experienced a loss of pressure should be replaced immediately with another Run Flat tire of identical size and service description (Load Index and Speed Symbol).

Run Flat Tires — If Equipped

Run Flat tires allow you the capability to drive 50 miles (80 km) at 50 mph (80 km/h) after a rapid loss of inflation pressure. This rapid loss of inflation is referred to as the Run Flat mode. A Run Flat mode occurs when the tire inflation pressure is of/or below 14 psi (96 kPa). Once a Run Flat tire reaches the run flat mode it has limited driving capabilities and needs to be replaced immediately. A Run Flat tire is not repairable.

It is not recommended driving a vehicle loaded at full capacity or to tow a trailer while a tire is in the run flat mode.

See the tire pressure monitoring section for more information.

Tire Spinning

When stuck in mud, sand, snow, or ice conditions, do not spin your vehicle's wheels above 30 mph (48 km/h) or for longer than 30 seconds continuously without stopping.

Refer to "Freeing A Stuck Vehicle" in "In Case Of Emergency" for further information.

WARNING!

Fast spinning tires can be dangerous. Forces generated by excessive wheel speeds may cause tire damage or failure. A tire could explode and injure someone. Do not spin your vehicle's wheels faster than 30 mph (48 km/h) for more than 30 seconds continuously when you are stuck, and do not let anyone near a spinning wheel, no matter what the speed.

Tread Wear Indicators

Tread wear indicators are in the original equipment tires to help you in determining when your tires should be replaced.

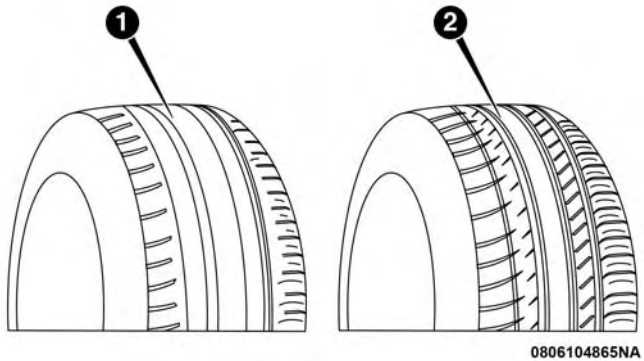

Tire Tread

1 — Worn Tire
2 — New Tire

These indicators are molded into the bottom of the tread grooves. They will appear as bands when the tread depth becomes a 1/16 of an inch (1.6 mm). When the tread is worn to the tread wear indicators, the tire should be replaced. Refer to "Replacement Tires" in this section for further information.

Life Of Tire

The service life of a tire is dependent upon varying factors including, but not limited to:

- Driving style.
- Tire pressure - Improper cold tire inflation pressures can cause uneven wear patterns to develop across the tire tread. These abnormal wear patterns will reduce tread life, resulting in the need for earlier tire replacement.
- Distance driven.
- Performance tires, tires with a speed rating of V or higher, and Summer tires typically have a reduced tread life. Rotation of these tires per the vehicle scheduled maintenance is highly recommended.

WARNING!

Tires and the spare tire should be replaced after six years, regardless of the remaining tread. Failure to follow this warning can result in sudden tire failure. You could lose control and have a collision resulting in serious injury or death.

Keep dismounted tires in a cool, dry place with as little exposure to light as possible. Protect tires from contact with oil, grease, and gasoline.

Replacement Tires

The tires on your new vehicle provide a balance of many characteristics. They should be inspected regularly for wear and correct cold tire inflation pressures. The manufacturer strongly recommends that you use tires equivalent to the originals in size, quality and performance when replacement is needed. Refer to the paragraph on "Tread Wear Indicators" in this section. Refer to the Tire and Loading Information placard or the Vehicle Certification Label for the size designation of your tire. The Load Index and Speed Symbol for your tire will be found on the original equipment tire sidewall.

See the Tire Sizing Chart example found in the "Tire Safety Information" section of this manual for more information relating to the Load Index and Speed Symbol of a tire.

It is recommended to replace the two front tires or two rear tires as a pair. Replacing just one tire can seriously affect your vehicle's handling. If you ever replace a wheel, make sure that the wheel's specifications match those of the original wheels.

It is recommended you contact your authorized tire dealer or original equipment dealer with any questions you may have on tire specifications or capability. Failure to use equivalent replacement tires may adversely affect the safety, handling, and ride of your vehicle.

WARNING!

- **Do not use a tire, wheel size, load rating, or speed rating other than that specified for your vehicle. Some combinations of unapproved tires and wheels may change suspension dimensions and performance characteristics, resulting in changes to steering, handling, and braking of your vehicle. This can cause unpredictable handling and stress to steering and suspension components. You could lose control and have a collision resulting in serious injury or death. Use only the tire and wheel sizes with load ratings approved for your vehicle.**
- **Never use a tire with a smaller load index or capacity, other than what was originally equipped on your vehicle. Using a tire with a smaller load index could result in tire overloading and failure. You could lose control and have a collision.**

(Continued)

WARNING! ***(Continued)***

- **Failure to equip your vehicle with tires having adequate speed capability can result in sudden tire failure and loss of vehicle control.**

CAUTION!

Replacing original tires with tires of a different size may result in false speedometer and odometer readings.

Tire Types

All Season Tires — If Equipped

All Season tires provide traction for all seasons (Spring, Summer, Fall, and Winter). Traction levels may vary between different all season tires. All season tires can be identified by the M+S, M&S, M/S or MS designation on the tire sidewall. Use all season tires only in sets of four; failure to do so may adversely affect the safety and handling of your vehicle.

Summer Or Three Season Tires — If Equipped

Summer tires provide traction in both wet and dry conditions, and are not intended to be driven in snow or on ice. If your vehicle is equipped with Summer tires, be aware these tires are not designed for Winter or cold driving conditions. Install Winter tires on your vehicle when ambient temperatures are less than 40°F (5°C) or if roads are covered with ice or snow. For more information, contact an authorized dealer.

Summer tires do not contain the all season designation or mountain/snowflake symbol on the tire sidewall. Use Summer tires only in sets of four; failure to do so may adversely affect the safety and handling of your vehicle.

WARNING!

Do not use Summer tires in snow/ice conditions. You could lose vehicle control, resulting in severe injury or death. Driving too fast for conditions also creates the possibility of loss of vehicle control.

Snow Tires

Some areas of the country require the use of snow tires during the Winter. Snow tires can be identified by a "mountain/snowflake" symbol on the tire sidewall.

If you need snow tires, select tires equivalent in size and type to the original equipment tires. Use snow tires only in sets of four; failure to do so may adversely affect the safety and handling of your vehicle.

Snow tires generally have lower speed ratings than what was originally equipped with your vehicle and should not be operated at sustained speeds over 75 mph (120 km/h). For speeds above 75 mph (120 km/h) refer to original equipment or an authorized tire dealer for recommended safe operating speeds, loading and cold tire inflation pressures.

While studded tires improve performance on ice, skid and traction capability on wet or dry surfaces may be poorer than that of non-studded tires. Some states prohibit studded tires; therefore, local laws should be checked before using these tire types.

Spare Tires — If Equipped

NOTE: For vehicles equipped with Tire Service Kit instead of a spare tire, please refer to "Tire Service Kit" in "In Case Of Emergency" for further information.

CAUTION!

Because of the reduced ground clearance, do not take your vehicle through an automatic car wash with a compact or limited use temporary spare installed. Damage to the vehicle may result.

Spare Tire Matching Original Equipped Tire And Wheel — If Equipped

Your vehicle may be equipped with a spare tire and wheel equivalent in look and function to the original equipment tire and wheel found on the front or rear axle of your vehicle. This spare tire may be used in the tire rotation for your vehicle. If your vehicle has this option, refer to an authorized tire dealer for the recommended tire rotation pattern.

Compact Spare Tire — If Equipped

The compact spare is for temporary emergency use only. You can identify if your vehicle is equipped with a compact spare by looking at the spare tire description on the Tire and Loading Information Placard located on the driver's side door opening or on the sidewall of the tire. Compact spare tire descriptions begin with the letter "T" or "S" preceding the size designation. Example: T145/80D18 103M.

T, S = Temporary Spare Tire

Since this tire has limited tread life, the original equipment tire should be repaired (or replaced) and reinstalled on your vehicle at the first opportunity.

Do not install a wheel cover or attempt to mount a conventional tire on the compact spare wheel, since the wheel is designed specifically for the compact spare tire. Do not install more than one compact spare tire and wheel on the vehicle at any given time.

WARNING!

Compact and collapsible spares are for temporary emergency use only. With these spares, do not drive more than 50 mph (80 km/h). Temporary use spares have limited tread life. When the tread is worn to the tread wear indicators, the temporary use spare tire needs to be replaced. Be sure to follow the warnings, which apply to your spare. Failure to do so could result in spare tire failure and loss of vehicle control.

Collapsible Spare Tire — If Equipped

The collapsible spare is for temporary emergency use only. You can identify if your vehicle is equipped with a collapsible spare by looking at the spare tire description on the Tire and Loading Information Placard located on the driver's side door opening or on the sidewall of the tire.

Collapsible spare tire description example: 165/80-17 101P.

Since this tire has limited tread life, the original equipment tire should be repaired (or replaced) and reinstalled on your vehicle at the first opportunity.

Inflate collapsible tire only after the wheel is properly installed to the vehicle. Inflate the collapsible tire using the electric air pump before lowering the vehicle.

Do not install a wheel cover or attempt to mount a conventional tire on the collapsible spare wheel, since the wheel is designed specifically for the collapsible spare tire.

WARNING!

Compact and Collapsible spares are for temporary emergency use only. With these spares, do not drive more than 50 mph (80 km/h). Temporary use spares have limited tread life. When the tread is worn to the tread wear indicators, the temporary use spare tire needs to be replaced. Be sure to follow the warnings, which apply to your spare. Failure to do so could result in spare tire failure and loss of vehicle control.

Full Size Spare — If Equipped

The full size spare is for temporary emergency use only. This tire may look like the originally equipped tire on the front or rear axle of your vehicle, but it is not. This spare tire may have limited tread life. When the tread is worn to the tread wear indicators, the temporary use full size spare tire needs to be replaced. Since it is not the same as your original equipment tire, replace (or repair) the original equipment tire and reinstall on the vehicle at the first opportunity.

Limited Use Spare — If Equipped

The limited use spare tire is for temporary emergency use only. This tire is identified by a label located on the limited use spare wheel. This label contains the driving limitations for this spare. This tire may look like the original equipped tire on the front or rear axle of your vehicle, but it is not. Installation of this limited use spare tire affects vehicle handling. Since it is not the same as your original equipment tire, replace (or repair) the original equipment tire and reinstall on the vehicle at the first opportunity.

WARNING!

Limited use spares are for emergency use only. Installation of this limited use spare tire affects vehicle handling. With this tire, do not drive more than the speed listed on the limited use spare wheel. Keep inflated to the cold tire inflation pressures listed on your Tire and Loading Information Placard located on the driver's side B-Pillar or the rear edge of the driver's side door. Replace (or repair) the original equipment tire at the first opportunity and reinstall it on your vehicle. Failure to do so could result in loss of vehicle control.

Wheel And Wheel Trim Care

All wheels and wheel trim, especially aluminum and chrome plated wheels, should be cleaned regularly using mild (neutral Ph) soap and water to maintain their luster and to prevent corrosion. Wash wheels with the same soap solution recommended for the body of the vehicle and remember to always wash when the surfaces are not hot to the touch.

Your wheels are susceptible to deterioration caused by salt, sodium chloride, magnesium chloride, calcium chloride, etc., and other road chemicals used to melt ice or control dust on dirt roads. Use a soft cloth or sponge and mild soap to wipe away promptly. Do not use harsh chemicals or a stiff brush. They can damage the wheel's protective coating that helps keep them from corroding and tarnishing.

CAUTION!

Avoid products or automatic car washes that use acidic solutions or strong alkaline additives or harsh brushes. Many aftermarket wheel cleaners and automatic car washes may damage the wheel's protective finish. Such damage is not covered by the New Vehicle Limited Warranty. Only car wash soap, Mopar Wheel Cleaner or equivalent is recommended.

When cleaning extremely dirty wheels including excessive brake dust, care must be taken in the selection of tire and wheel cleaning chemicals and equipment to prevent damage to the wheels. Mopar Wheel Treatment or Mopar Chrome Cleaner or their equivalent is recommended or select a non-abrasive, non-acidic cleaner for aluminum or chrome wheels.

CAUTION!

Do not use scouring pads, steel wool, a bristle brush, metal polishes or oven cleaner. These products may damage the wheel's protective finish. Such damage is not covered by the New Vehicle Limited Warranty. Only car wash soap, Mopar Wheel Cleaner or equivalent is recommended.

NOTE: If you intend parking or storing your vehicle for an extended period after cleaning the wheels with wheel cleaner, drive your vehicle and apply the brakes to remove the water droplets from the brake components. This activity will remove the red rust on the brake rotors and prevent vehicle vibration when braking.

Dark Vapor Chrome, Black Satin Chrome, or Low Gloss Clear Coat Wheels

CAUTION!

If your vehicle is equipped with these specialty wheels, DO NOT USE wheel cleaners, abrasives, or polishing compounds. They will permanently damage this finish and such damage is not covered by the New Vehicle Limited Warranty. HAND WASH ONLY USING MILD SOAP AND WATER WITH A SOFT CLOTH. Used on a regular basis; this is all that is required to maintain this finish.

Tire Chains (Traction Devices)

Use of traction devices require sufficient tire-to-body clearance. Follow these recommendations to guard against damage.

- Traction device must be of proper size for the tire, as recommended by the traction device manufacturer.
- Install on Front Tires Only.
- Due to limited clearance, P225/65R17 tire with a Peerless Super Z6 low profile traction device or equivalent is recommended.

WARNING!

Using tires of different size and type (M+S, Snow) between front and rear axles can cause unpredictable handling. You could lose control and have a collision.

CAUTION!

To avoid damage to your vehicle or tires, observe the following precautions:

- **Because of restricted traction device clearance between tires and other suspension components, it is important that only traction devices in good condition are used. Broken devices can cause serious damage. Stop the vehicle immediately if noise occurs that could indicate device breakage. Remove the damaged parts of the device before further use.**
- **Install device as tightly as possible and then retighten after driving about ½ mile (0.8 km).**
- **Do not exceed 30 mph (48 km/h).**
- **Drive cautiously and avoid severe turns and large bumps, especially with a loaded vehicle.**
- **Do not drive for a prolonged period on dry pavement.**

(Continued)

CAUTION! ***(Continued)***

- **Observe the traction device manufacturer's instructions on the method of installation, operating speed, and conditions for use. Always use the suggested operating speed of the device manufacturer's if it is less than 30 mph (48 km/h).**
- **Do not use traction devices on a compact spare tire.**

Tire Rotation Recommendations

The tires on the front and rear of your vehicle operate at different loads and perform different steering, handling, and braking functions. For these reasons, they wear at unequal rates.

These effects can be reduced by timely rotation of tires. The benefits of rotation are especially worthwhile with aggressive tread designs such as those on all season type tires. Rotation will increase tread life, help to maintain mud, snow and wet traction levels, and contribute to a smooth, quiet ride.

Refer to the "Maintenance Plan" for the proper maintenance intervals. The reasons for any rapid or unusual wear should be corrected prior to rotation being performed.

The suggested Front Wheel Drive (FWD) rotation method is the "forward cross" shown in the following diagram. This rotation pattern does not apply to some directional tires that must not be reversed.

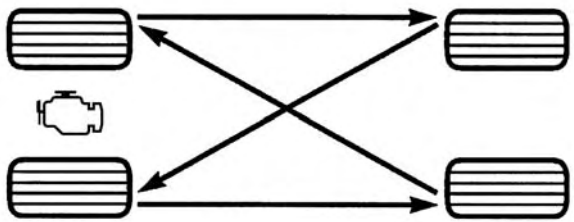

055707139

Front Wheel Drive (FWD) Tire Rotation

The suggested All Wheel Drive (AWD) Tire rotation method is the "rearward cross" shown in the following diagram.

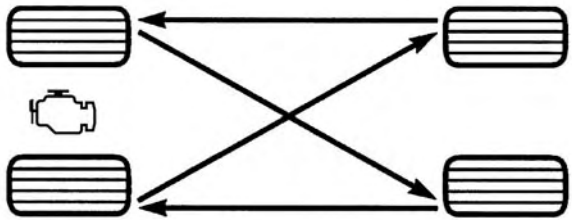

055703771

All Wheel Drive (AWD) Tire Rotation

CAUTION!

Proper operation of All Wheel Drive vehicles depends on tires of equal size, type and circumference on each wheel. Any difference in tire size can cause damage to the power transfer unit. Tire rotation schedule should be followed to balance tire wear.

DEPARTMENT OF TRANSPORTATION UNIFORM TIRE QUALITY GRADES

The following tire grading categories were established by the National Highway Traffic Safety Administration. The specific grade rating assigned by the tire's manufacturer in each category is shown on the sidewall of the tires on your vehicle.

All passenger vehicle tires must conform to Federal safety requirements in addition to these grades.

Treadwear

The Treadwear grade is a comparative rating, based on the wear rate of the tire when tested under controlled conditions on a specified government test course. For example, a tire graded 150 would wear one and one-half times as well on the government course as a tire graded 100. The relative performance of tires depends upon the actual conditions of their use, however, and may depart significantly from the norm due to variations in driving habits, service practices, and differences in road characteristics and climate.

Traction Grades

The Traction grades, from highest to lowest, are AA, A, B, and C. These grades represent the tire's ability to stop on wet pavement, as measured under controlled conditions on specified government test surfaces of asphalt and concrete. A tire marked C may have poor traction performance.

WARNING!

The traction grade assigned to this tire is based on straight-ahead braking traction tests, and does not include acceleration, cornering, hydroplaning, or peak traction characteristics.

Temperature Grades

The Temperature grades are A (the highest), B, and C, representing the tire's resistance to the generation of heat and its ability to dissipate heat, when tested under controlled conditions on a specified indoor laboratory test wheel.

Sustained high temperature can cause the material of the tire to degenerate and reduce tire life, and excessive temperature can lead to sudden tire failure. The grade C

corresponds to a level of performance, which all passenger vehicle tires must meet under the Federal Motor Vehicle Safety Standard No. 109. Grades B and A represent higher levels of performance on the laboratory test wheel, than the minimum required by law.

WARNING!

The temperature grade for this tire is established for a tire that is properly inflated and not overloaded. Excessive speed, under-inflation, or excessive loading, either separately or in combination, can cause heat buildup and possible tire failure.

BODYWORK

Protection From Atmospheric Agents

Vehicle body care requirements vary according to geographic locations and usage. Chemicals that make roads passable in snow and ice and those that are sprayed on trees and road surfaces during other seasons are highly corrosive to the metal in your vehicle. Outside parking, which exposes your vehicle to airborne contaminants, road surfaces on which the vehicle is operated, extreme hot or cold weather and other extreme conditions will have an adverse effect on paint, metal trim, and underbody protection.

The following maintenance recommendations will enable you to obtain maximum benefit from the corrosion resistance built into your vehicle.

What Causes Corrosion?

Corrosion is the result of deterioration or removal of paint and protective coatings from your vehicle.

The most common causes are:

- Road salt, dirt and moisture accumulation.
- Stone and gravel impact.
- Insects, tree sap and tar.
- Salt in the air near seacoast localities.
- Atmospheric fallout/industrial pollutants.

Body And Underbody Maintenance

Cleaning Headlights

Your vehicle is equipped with plastic headlights and fog lights that are lighter and less susceptible to stone breakage than glass headlights.

Plastic is not as scratch resistant as glass and therefore different lens cleaning procedures must be followed.

To minimize the possibility of scratching the lenses and reducing light output, avoid wiping with a dry cloth. To remove road dirt, wash with a mild soap solution followed by rinsing.

Do not use abrasive cleaning components, solvents, steel wool or other aggressive material to clean the lenses.

Preserving The Bodywork

Washing

- Wash your vehicle regularly. Always wash your vehicle in the shade using Mopar Car Wash, or a mild car wash soap, and rinse the panels completely with clear water.
- If insects, tar, or other similar deposits have accumulated on your vehicle, use Mopar Super Kleen Bug and Tar Remover to remove.
- Use a high quality cleaner wax, such as Mopar Cleaner Wax to remove road film, stains and to protect your paint finish. Take care never to scratch the paint.
- Avoid using abrasive compounds and power buffing that may diminish the gloss or thin out the paint finish.

CAUTION!

- **Do not use abrasive or strong cleaning materials such as steel wool or scouring powder that will scratch metal and painted surfaces.**
- **Use of power washers exceeding 1,200 psi (8,274 kPa) can result in damage or removal of paint and decals.**

Special Care

- If you drive on salted or dusty roads or if you drive near the ocean, hose off the undercarriage at least once a month.
- It is important that the drain holes in the lower edges of the doors, rocker panels, and trunk be kept clear and open.
- If you detect any stone chips or scratches in the paint, touch them up immediately. The cost of such repairs is considered the responsibility of the owner.

- If your vehicle is damaged due to a collision or similar cause that destroys the paint and protective coating, have your vehicle repaired as soon as possible. The cost of such repairs is considered the responsibility of the owner.
- If you carry special cargo such as chemicals, fertilizers, de-icer salt, etc., be sure that such materials are well packaged and sealed.
- If a lot of driving is done on gravel roads, consider mud or stone shields behind each wheel.
- Use Mopar Touch Up Paint on scratches as soon as possible. Your authorized dealer has touch up paint to match the color of your vehicle.

INTERIORS

Seats And Fabric Parts

Use Mopar Total Clean to clean fabric upholstery and carpeting.

WARNING!

Do not use volatile solvents for cleaning purposes. Many are potentially flammable, and if used in closed areas they may cause respiratory harm.

Seat Belt Maintenance

Do not bleach, dye, or clean the belts with chemical solvents or abrasive cleaners. This will weaken the fabric. Sun damage can also weaken the fabric.

If the belts need cleaning, use Mopar Total Clean, a mild soap solution, or lukewarm water. Do not remove the belts from the vehicle to wash them. Dry with a soft cloth.

Replace the belts if they appear frayed or worn or if the buckles do not work properly.

WARNING!

A frayed or torn belt could rip apart in a collision and leave you with no protection. Inspect the belt system periodically, checking for cuts, frays, or loose parts. Damaged parts must be replaced immediately. Do not disassemble or modify the system. Seat belt assemblies must be replaced after a collision if they have been damaged (i.e., bent retractor, torn webbing, etc.).

Plastic And Coated Parts

Use Mopar Total Clean to clean vinyl upholstery.

CAUTION!

- **Direct contact of air fresheners, insect repellents, suntan lotions, or hand sanitizers to the plastic, painted, or decorated surfaces of the interior may cause permanent damage. Wipe away immediately.**
- **Damage caused by these type of products may not be covered by your New Vehicle Limited Warranty.**

Cleaning Plastic Instrument Cluster Lenses

The lenses in front of the instruments in this vehicle are molded in clear plastic. When cleaning the lenses, care must be taken to avoid scratching the plastic.

1. Clean with a wet soft cloth. A mild soap solution may be used, but do not use high alcohol content or abrasive cleaners. If soap is used, wipe clean with a clean damp cloth.
2. Dry with a soft cloth.

Leather Parts

Mopar Total Clean is specifically recommended for leather upholstery.

Your leather upholstery can be best preserved by regular cleaning with a damp soft cloth. Small particles of dirt can act as an abrasive and damage the leather upholstery and should be removed promptly with a damp cloth. Stubborn soils can be removed easily with a soft cloth and Mopar Total Clean. Care should be taken to avoid soaking your leather upholstery with any liquid. Please do not use polishes, oils, cleaning fluids, solvents, detergents, or ammonia-based cleaners to clean your leather upholstery. Application of a leather conditioner is not required to maintain the original condition.

NOTE: If equipped with light colored leather, it tends to show any foreign material, dirt, and fabric dye transfer more so than darker colors. The leather is designed for easy cleaning, and FCA recommends Mopar total care leather cleaner applied on a cloth to clean the leather seats as needed.

CAUTION!

Do not use Alcohol and Alcohol-based and/or Ketone based cleaning products to clean leather seats, as damage to the seat may result.

Glass Surfaces

All glass surfaces should be cleaned on a regular basis with Mopar Glass Cleaner, or any commercial household-type glass cleaner. Never use an abrasive type cleaner. Use caution when cleaning the inside rear window equipped with electric defrosters or windows equipped with radio antennas. Do not use scrapers or other sharp instruments that may scratch the elements.

When cleaning the rear view mirror, spray cleaner on the towel or cloth that you are using. Do not spray cleaner directly on the mirror.

Cleaning The Cupholders

Clean with a damp cloth or towel using a mild detergent.

TECHNICAL SPECIFICATIONS

CONTENTS

■ IDENTIFICATION DATA 372
- □ Vehicle Identification Number 372

■ BRAKE SYSTEM 372

■ WHEEL AND TIRE TORQUE SPECIFICATIONS . .373
- □ Torque Specifications 373

■ FUEL REQUIREMENTS 375
- □ Reformulated Gasoline 375
- □ Materials Added To Fuel 375
- □ Gasoline/Oxygenate Blends 376
- □ Do Not Use E-85 In Non-Flex Fuel Vehicles 376
- □ CNG And LP Fuel System Modifications 377
- □ MMT In Gasoline 377
- □ Fuel System Cautions 377
- □ Carbon Monoxide Warnings 378

■ FLEXIBLE FUEL (3.6L ENGINE ONLY) 378
- □ E-85 General Information 378
- □ Ethanol Fuel (E-85) 378
- □ Fuel Requirements 379
- □ Selection Of Engine Oil For Flexible Fuel Vehicles (E-85) And Gasoline Vehicles 379
- □ Starting 380
- □ Cruising Range 380
- □ Replacement Parts 380
- □ Maintenance 380

■ FLUID CAPACITIES 381

■ FLUIDS AND LUBRICANTS 382
- □ Engine 382
- □ Chassis 384

IDENTIFICATION DATA

Vehicle Identification Number

The Vehicle Identification Number (VIN) is on the left front corner of the instrument panel and is visible from outside of the vehicle through the windshield. This number also appears stamped on the right front door sill under the sill moulding and printed on the Automobile Information Disclosure Label affixed to a window on your vehicle, the vehicle registration and title.

The VIN is also stamped on either right or left hand side of the engine block.

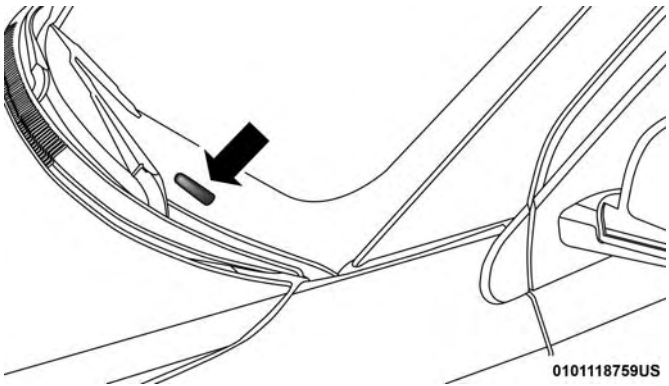

VIN Location

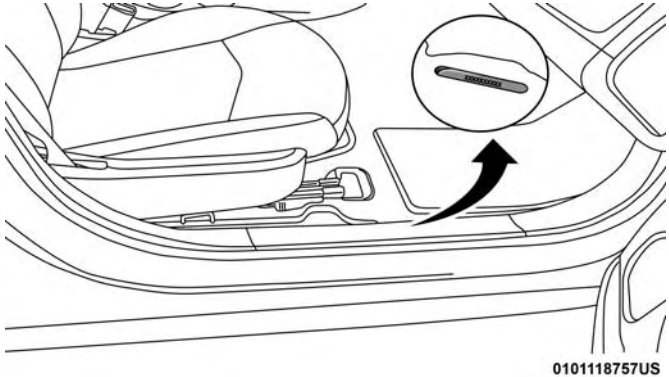

Stamped VIN Location

NOTE: It is illegal to remove or alter the VIN.

BRAKE SYSTEM

Your vehicle is equipped with dual hydraulic brake systems. If either of the two hydraulic systems loses normal capability, the remaining system will still function. However, there will be some loss of overall braking effectiveness. This will be evident by increased pedal travel during application and greater pedal force required to slow or stop the vehicle. In addition, if the malfunction is caused by a leak in the

hydraulic system, the "Brake Warning Light" will turn on as the brake fluid level drops in the master cylinder.

In the event power assist is lost for any reason (i.e., repeated brake applications with the engine OFF) the brakes will still function. However, the effort required to brake the vehicle will be much greater than that required with the power system operating.

WARNING!

- **Riding the brakes can lead to brake failure and possibly a collision. Driving with your foot resting or riding on the brake pedal can result in abnormally high brake temperatures, excessive lining wear, and possible brake damage. You would not have your full braking capacity in an emergency.**
- **Driving a vehicle with the "Brake Warning Light" on is dangerous. A significant decrease in braking performance or vehicle stability during braking may occur. It will take you longer to stop the vehicle or will make your vehicle harder to control. You could have a collision. Have the vehicle checked immediately.**

WHEEL AND TIRE TORQUE SPECIFICATIONS

Proper lug nut/bolt torque is very important to ensure that the wheel is properly mounted to the vehicle. Any time a wheel has been removed and reinstalled on the vehicle, the lug nuts/bolts should be torqued using a properly calibrated torque wrench using a high quality six sided (hex) deep wall socket.

Torque Specifications

Lug Nut/Bolt Torque	**Lug Nut/Bolt Size	Lug Nut/Bolt Socket Size
100 Ft-Lbs (135 N·m)	M12 x 1.5	19 mm

**Use only your authorized dealer recommended lug nuts/bolts and clean or remove any dirt or oil before tightening.

Inspect the wheel mounting surface prior to mounting the tire and remove any corrosion or loose particles.

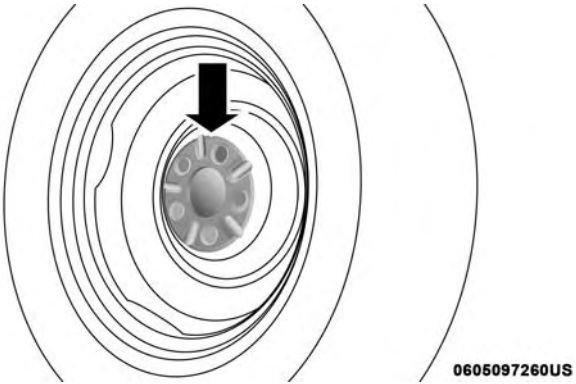

Wheel Mounting Surface

Tighten the lug nuts/bolts in a star pattern until each nut/bolt has been tightened twice. Ensure that the socket is fully engaged on the lug nut/bolt (do not insert it half-way).

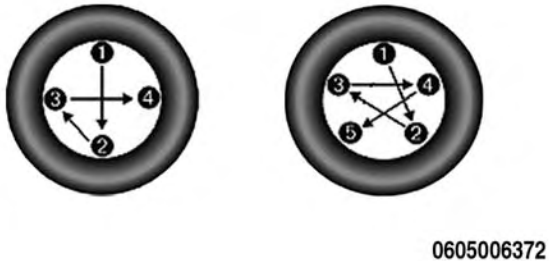

Torque Patterns

After 25 miles (40 km), check the lug nut/bolt torque to be sure that all the lug nuts/bolts are properly seated against the wheel.

WARNING!

To avoid the risk of forcing the vehicle off the jack, do not tighten the lug nuts fully until the vehicle has been lowered. Failure to follow this warning may result in personal injury.

FUEL REQUIREMENTS

These engines are designed to meet all emissions regulations and provide optimum fuel economy and performance when using high quality unleaded "Regular" gasoline having a posted octane number of 87 as specified by the (R+M)/2 method. The use of higher octane "Premium" gasoline is not required, as it will not provide any benefit over "Regular" gasoline in these engines.

While operating on gasoline with an octane number of 87, hearing a light knocking sound from the engine is not a cause for concern. However, if the engine is heard making a heavy knocking sound, see your dealer immediately. Use of gasoline with an octane number lower than 87 can cause engine failure and may void or not be covered by the New Vehicle Limited Warranty.

Poor quality gasoline can cause problems such as hard starting, stalling, and hesitations. If you experience these symptoms, try another brand of gasoline before considering service for the vehicle.

Reformulated Gasoline

Many areas of the country require the use of cleaner burning gasoline referred to as "Reformulated Gasoline". Reformulated gasoline contains oxygenates and are specifically blended to reduce vehicle emissions and improve air quality.

The use of reformulated gasoline is recommended. Properly blended reformulated gasoline will provide improved performance and durability of engine and fuel system components.

Materials Added To Fuel

Besides using unleaded gasoline with the proper octane rating, gasolines that contain detergents, corrosion and stability additives are recommended. Using gasolines that have these additives will help improve fuel economy, reduce emissions, and maintain vehicle performance.

Designated TOP TIER Detergent Gasoline contains a higher level of detergents to further aide in minimizing engine and fuel system deposits. When available, the usage of Top Tier Detergent gasoline is recommended. Visit www.toptiergas.com for a list of TOP TIER Detergent Gasoline Retailers.

Indiscriminate use of fuel system cleaning agents should be avoided. Many of these materials intended for gum and varnish removal may contain active solvents or similar ingredients. These can harm fuel system gasket and diaphragm materials.

Gasoline/Oxygenate Blends

Some fuel suppliers blend unleaded gasoline with oxygenates such as ethanol.

CAUTION!

DO NOT use E-85, gasoline containing methanol, or gasoline containing more than 15% ethanol (E-15). Use of these blends may result in starting and drivability problems, damage critical fuel system components,

(Continued)

CAUTION! *(Continued)*

cause emissions to exceed the applicable standard, and/or cause the "Malfunction Indicator Light" to illuminate. Please observe pump labels as they should clearly communicate if a fuel contains greater than 15% ethanol (E-15).

Problems that result from using gasoline containing more than 15% ethanol (E-15) or gasoline containing methanol are not the responsibility of the manufacturer and may void or not be covered under New Vehicle Limited Warranty.

Do Not Use E-85 In Non-Flex Fuel Vehicles

Non-Flex Fuel Vehicles (FFV) are compatible with gasoline containing up to 15% ethanol (E-15). Use of gasoline with higher ethanol content may void the New Vehicle Limited Warranty.

If a Non-FFV vehicle is inadvertently fueled with E-85 fuel, the engine will have some or all of these symptoms:

- Operate in a lean mode.
- OBD II "Malfunction Indicator Light" on.
- Poor engine performance.

- Poor cold start and cold drivability.
- Increased risk for fuel system component corrosion.

CNG And LP Fuel System Modifications

Modifications that allow the engine to run on compressed natural gas (CNG) or liquid propane (LP) may result in damage to the engine, emissions, and fuel system components. Problems that result from running CNG or LP are not the responsibility of the manufacturer and may void or not be covered under the New Vehicle Limited Warranty.

MMT In Gasoline

Methylcyclopentadienyl Manganese Tricarbonyl (MMT) is a manganese-containing metallic additive that is blended into some gasoline to increase octane. Gasoline blended with MMT provides no performance advantage beyond gasoline of the same octane number without MMT. Gasoline blended with MMT reduces spark plug life and reduces emissions system performance in some vehicles. The manufacturer recommends that gasoline without MMT be used in your vehicle. The MMT content of gasoline may not be indicated on the gasoline pump; therefore, you should ask your gasoline retailer whether the gasoline contains MMT. MMT is prohibited in Federal and California reformulated gasoline.

Fuel System Cautions

CAUTION!

Follow these guidelines to maintain your vehicle's performance:

- **The use of leaded gasoline is prohibited by Federal law. Using leaded gasoline can impair engine performance and damage the emissions control system.**
- **An out-of-tune engine or certain fuel or ignition malfunctions can cause the catalytic converter to overheat. If you notice a pungent burning odor or some light smoke, your engine may be out of tune or malfunctioning and may require immediate service. Contact your authorized dealer for service assistance.**
- **The use of fuel additives, which are now being sold as octane enhancers, is not recommended. Most of these products contain high concentrations of methanol. Fuel system damage or vehicle performance problems resulting from the use of such fuels or additives is not the responsibility of the manufacturer and may void or not be covered under the New Vehicle Limited Warranty.**

NOTE: Intentional tampering with the emissions control system can result in civil penalties being assessed against you.

Carbon Monoxide Warnings

WARNING!

Carbon monoxide (CO) in exhaust gases is deadly. Follow the precautions below to prevent carbon monoxide poisoning:

- **Do not inhale exhaust gases. They contain carbon monoxide, a colorless and odorless gas, which can kill. Never run the engine in a closed area, such as a garage, and never sit in a parked vehicle with the engine running for an extended period. If the vehicle is stopped in an open area with the engine running for more than a short period, adjust the ventilation system to force fresh, outside air into the vehicle.**
- **Guard against carbon monoxide with proper maintenance. Have the exhaust system inspected every time the vehicle is raised. Have any abnormal conditions repaired promptly. Until repaired, drive with all side windows fully open.**

FLEXIBLE FUEL (3.6L ENGINE ONLY)

E-85 General Information

The information in this section is unique for Flexible Fuel vehicles only. These vehicles can be identified by a unique fuel filler door label that states **Ethanol (E-85) or Unleaded Gasoline Only** and/or a yellow fuel cap. Please refer to the other sections of this manual for information on features that are common between Flexible Fuel and non-Flexible Fuel powered vehicles.

CAUTION!

Only vehicles with the E-85 fuel filler door label or a yellow gas cap can operate on E-85.

Ethanol Fuel (E-85)

E-85 is a mixture of approximately 85% ethanol and 15% unleaded gasoline.

WARNING!

Ethanol vapors are extremely flammable and could cause serious personal injury. Never have any smoking

(Continued)

WARNING! ***(Continued)***

materials lit or products that can cause spark in or near the vehicle when removing the fuel filler tube cap (gas cap) or filling the tank. Do not use E-85 as a cleaning agent and never use it near an open flame.

Fuel Requirements

If your vehicle is E-85 compatible, it will operate on unleaded gasoline with any octane rating, or solely E-85 fuel, or any mixture of these fuels.

For best results, avoid fueling patterns alternating between E-85 and unleaded gasoline.

When switching fuel types:

- Add 5 gallons (19 liters) or more when refueling.
- Drive the vehicle immediately after refueling for at least 5 miles (8 km).

Observing these precautions will avoid possible hard starting and/or driveability problems during warm up.

NOTE:

- Use seasonally adjusted E-85 fuel (ASTM D5798). With non-seasonally adjusted E-85 fuel, hard starting and rough idle following start up may be experienced even if the above recommendations are followed, especially when the ambient temperature is below 32°F (0°C).
- Some additives used in regular gasoline are not fully compatible with E-85 and may form deposits in your engine. To eliminate driveability issues that may be caused by these deposits, a supplemental gasoline additive, such as Mopar Injector Cleanup or Techron may be used.

Selection Of Engine Oil For Flexible Fuel Vehicles (E-85) And Gasoline Vehicles

FFV vehicles operated on E-85 require specially formulated engine oils. These special requirements are included in Mopar engine oils, and in equivalent oils meeting FCA US Material Standard MS-6395. It is recommended that engine oils that are API Certified and meet the requirements of Material Standard MS-6395 be used. MS-6395 contains additional requirements, developed during extensive fleet testing, to provide additional protection to FCA US LLC engines.

Starting

The characteristics of E-85 fuel make it unsuitable for use when ambient temperatures fall below 0°F (-18°C). In the range of 0°F (-18°C) to 32°F (0°C), an increase in the time it takes for your engine to start may be experienced, and a deterioration in driveability (sags and/or hesitations) until the engine is fully warmed up. These issues may be improved with the use of seasonally adjusted E-85 fuel.

NOTE: Use of the engine block heater (if equipped) may improve engine start time when using E-85 fuel when the ambient temperature is less than 32°F (0°C).

Cruising Range

Because E-85 fuel contains less energy per gallon/liter than gasoline, an increase in fuel consumption will be experienced. The miles per gallon (mpg)/kilometers per liter and the driving range will decrease by approximately 30%, compared to gasoline operation.

Replacement Parts

All fuel and engine components in your Flexible Fuel Vehicle (FFV) are designed to be compatible with ethanol. Ethanol compatible service components are required.

CAUTION!

Replacing fuel system components with non-ethanol compatible components can damage your vehicle.

Maintenance

CAUTION!

Do not use ethanol mixture greater than 85% in your vehicle. It will cause difficulty in cold starting and may affect drivability.

FLUID CAPACITIES

	U.S.	Metric
Fuel (Approximate)		
Front Wheel Drive (FWD) Models	20.5 Gallons	77.6 Liters
All-Wheel Drive Models	21.1 Gallons	79.8 Liters
Engine Oil With Filter		
2.4L Engine (SAE 5W-20, API Certified)	4.5 Quarts	4.26 Liters
3.6L Engine (SAE 5W-20, API Certified)	6 Quarts	5.6 Liters
Cooling System*		
2.4L Engine and Single or Dual-Zone Climate Control System (Mopar Antifreeze/Engine Coolant 10 Year/150,000 Mile Formula)	8 Quarts	7.5 Liters
2.4L Engine and Three-Zone Climate Control System (Mopar Antifreeze/Engine Coolant 10 Year/150,000 Mile Formula)	10 Quarts	9.5 Liters
3.6L Engine and Single or Dual-Zone Climate Control System (Mopar Antifreeze/Engine Coolant 10 Year/150,000 Mile Formula)	13.1 Quarts	12.4 Liters
3.6L Engine and Three-Zone Climate Control System (Mopar Antifreeze/Engine Coolant 10 Year/150,000 Mile Formula)	14.5 Quarts	13.7 Liters
* Includes heater and coolant recovery bottle filled to MAX level.		

FLUIDS AND LUBRICANTS

Engine

Component	Fluid, Lubricant, or Genuine Part
Engine Coolant	We recommend you use Mopar Antifreeze/Coolant 10 Year/150,000 Mile Formula OAT (Organic Additive Technology).
Engine Oil	We recommend you use API Certified SAE 5W-20 Engine Oil, meeting the requirements of FCA Material Standard MS-6395 such as Mopar, Pennzoil, and Shell Helix. Refer to your engine oil filler cap for correct SAE grade.
Engine Oil Filter	We recommend you use Mopar Engine Oil Filter.
Spark Plugs	We recommend you use Mopar Spark Plugs.
Fuel Selection	87 Octane, 0-15% Ethanol.
Fuel Selection – 3.6L Flex Fuel (E-85) Engine – If Equipped	87 Octane, Up To 85% Ethanol.

CAUTION!

- **Mixing of engine coolant (antifreeze) other than specified Organic Additive Technology (OAT) engine coolant (antifreeze), may result in engine damage and may decrease corrosion protection. Organic Additive Technology (OAT) engine coolant is different and should not be mixed with Hybrid Organic Additive Technology (HOAT) engine coolant (antifreeze) or any "globally compatible" coolant (antifreeze). If a non-OAT engine coolant (antifreeze) is introduced into the cooling system in an emergency, the cooling system will need to be drained, flushed,**

(Continued)

CAUTION! ***(Continued)***

and refilled with fresh OAT coolant (conforming to MS.90032), by an authorized dealer as soon as possible.
- **Do not use water alone or alcohol-based engine coolant (antifreeze) products. Do not use additional rust inhibitors or antirust products, as they may not be compatible with the radiator engine coolant and may plug the radiator.**
- **This vehicle has not been designed for use with propylene glycol-based engine coolant (antifreeze). Use of propylene glycol-based engine coolant (antifreeze) is not recommended.**

Chassis

Component	Fluid, Lubricant, or Genuine Part
Automatic Transmission	Use only ATF+4 Automatic Transmission Fluid. Failure to use ATF+4 fluid may affect the function or performance of your transmission. We recommend Mopar ATF+4 fluid.
Power Transfer Unit (PTU)	We recommend you use Mopar Gear Lubricant 75W-90.
Rear Drive Assembly (RDA)	We recommend you use Mopar Gear Lubricant 75W-90.
Brake Master Cylinder	We recommend you use Mopar DOT 3, SAE J1703. If DOT 3 brake fluid is not available, then DOT 4 is acceptable.
Power Steering Reservoir	We recommend you use Mopar Power Steering Fluid + 4, or Mopar ATF+4 Automatic Transmission Fluid.

MULTIMEDIA

CONTENTS

- UCONNECT RADIOS 387
- CYBERSECURITY 387
- UCONNECT SETTINGS 388
  - Customer Programmable Features — Radio 4.3 Settings 388
  - Customer Programmable Features — Uconnect 3/3 NAV Settings 400
- STEERING WHEEL AUDIO CONTROLS 416
  - Right-Hand Switch Functions 417
  - Left-Hand Switch Functions For Radio Operation 417
  - Left-Hand Switch Functions For Media (i.e., CD) Operation 417
- IPOD/USB/MP3 CONTROL 417
- UCONNECT MULTIMEDIA — VIDEO ENTERTAINMENT SYSTEM (VES) — IF EQUIPPED 417
  - Getting Started. 418
  - Single Video Screen 418
  - Play Video Games 418
  - Listen To An Audio Source On Channel 2 While A Video Is Playing On Channel 1 419
  - Play A DVD Using The Touchscreen Radio 420
  - VES Remote Control — If Equipped 421
  - Remote Control Storage 423
  - Locking The Remote Control 423
  - Replacing The Remote Control Batteries 423
  - Important Notes For Single Video Screen System 424

- VES Headphones Operation 424
- Controls 424
- Replacing The Headphone Batteries 425
- Accessibility 425
- Unwired Stereo Headphone Lifetime Limited Warranty 426
- System Information 427

■ UCONNECT PHONE (4.3) 433

- Radio 4.3 433
- Operation 435
- Phone Call Features 440
- Uconnect Phone Features 444
- Advanced Phone Connectivity 447
- Things You Should Know About Your Uconnect Phone 448
- General Information 451

■ UCONNECT PHONE (UCONNECT 3/3 NAV) . . .452

- Operation 454
- Phone Call Features 463
- Uconnect Phone Features 467
- Advanced Phone Connectivity 470
- Things You Should Know About Your Uconnect Phone 471
- General Information 480

■ RADIO OPERATION AND MOBILE PHONES . . .480

- Regulatory And Safety Information 480

■ VOICE COMMAND (UCONNECT 3/3 NAV) 482

- Uconnect 3/3 NAV 482
- Uconnect Voice Commands 484

■ CD/DVD DISC MAINTENANCE 492

UCONNECT RADIOS

For detailed information about your Uconnect radio, refer to your Uconnect Owner's Manual Supplement.

NOTE: Uconnect screen images are for illustration purposes only and may not reflect exact software for your vehicle.

CYBERSECURITY

Your vehicle may be a connected vehicle and may be equipped with both wired and wireless networks. These networks allow your vehicle to send and receive information. This information allows systems and features in your vehicle to function properly.

Your vehicle may be equipped with certain security features to reduce the risk of unauthorized and unlawful access to vehicle systems and wireless communications. Vehicle software technology continues to evolve over time and FCA US LLC, working with its suppliers, evaluates and takes appropriate steps as needed. Similar to a computer or other devices, your vehicle may require software updates to improve the usability and performance of your systems or to reduce the potential risk of unauthorized and unlawful access to your vehicle systems.

The risk of unauthorized and unlawful access to your vehicle systems may still exist, even if the most recent version of vehicle software (such as Uconnect software) is installed.

WARNING!

- **It is not possible to know or to predict all of the possible outcomes if your vehicle's systems are breached. It may be possible that vehicle systems, including safety related systems, could be impaired or a loss of vehicle control could occur that may result in an accident involving serious injury or death.**
- **ONLY insert media (e.g., USB, SD card, or CD) into your vehicle if it came from a trusted source. Media of unknown origin could possibly contain malicious software, and if installed in your vehicle, it may increase the possibility for vehicle systems to be breached.**
- **As always, if you experience unusual vehicle behavior, take your vehicle to your nearest authorized dealer immediately.**

NOTE:

- FCA or your dealer may contact you directly regarding software updates.
- To help further improve vehicle security and minimize the potential risk of a security breach, vehicle owners should:
  - Routinely check http://www.driveuconnect.com/software-update/ to learn about available Uconnect software updates.
  - Only connect and use trusted media devices (e.g. personal mobile phones, USBs, CDs).

Privacy of any wireless and wired communications cannot be assured. Third parties may unlawfully intercept information and private communications without your consent. For further information, refer to "Onboard Diagnostic System (OBD II) Cybersecurity" in "Getting To Know Your Instrument Panel".

UCONNECT SETTINGS

The Uconnect system uses a combination of buttons on the touchscreen and buttons on the faceplate located on the center of the instrument panel that allows you to access and change the customer programmable features.

Customer Programmable Features — Radio 4.3 Settings

In this mode the Uconnect system allows you to access programmable features that may be equipped such as Display, Clock, Safety & Driving Assistance, Lights, Doors & Locks, Heated Seats, Engine Off Operation, Compass Settings, Audio and Phone/Bluetooth Setup through buttons on the faceplate and touchscreen.

NOTE: Only one touchscreen area may be selected at a time.

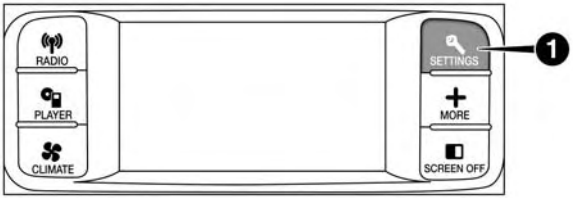

1002119283US

1 — Radio 4.3 Buttons On The Faceplate

Push the SETTINGS button on the faceplate to access the Settings screen, use the "Page Up"/"Page Down" buttons on the touchscreen to scroll through the following settings. Press the desired setting button on the touchscreen to change the setting using the description shown on the following pages for each setting.

Radio 4.3 Buttons On The Touchscreen

Display

After pressing the “Display” button on the touchscreen, the following settings will be available:

Setting Name	Selectable Options		
Brightness	+	–	
NOTE: The “Brightness” setting can also be adjusted by selecting any point on the scale between the “+” and “–” buttons on the touchscreen.			
Mode	Day	Night	Auto
Language	English	Français	Español
NOTE: When in the “Language” feature, you may select one of three languages for all display nomenclature, including the trip functions and the navigation system (if equipped).			
Units	US	Metric	
Voice Response	Brief	Long	
Touchscreen Beep	On	Off	

Clock

After pressing the "Clock & Date" button on the touchscreen, the following settings will be available:

Setting Name	Selectable Options			
Set Time and Format	12 hour	24 hour	AM	PM
NOTE: Within the "Set Time and Format" setting, press the corresponding arrow buttons on the touchscreen to adjust to the correct time.				
Show Time Status — If Equipped	On		Off	
Sync Time — If Equipped	On		Off	

Safety & Driving Assistance

After pressing the "Safety & Driving Assistance" button on the touchscreen, the following settings will be available:

Setting Name	Selectable Options		
Park Assist — If Equipped	Off	Sound Only	Sounds and Display
NOTE: The Rear Park Assist system will scan for, and the alert the driver of, objects behind the vehicle when the transmission gear selector is in REVERSE and the vehicle speed is less than 11 mph (18 km/h).			

Setting Name	Selectable Options	
Hill Start Assist — If Equipped	On	Off

Lights

After pressing the "Lights" button on the touchscreen, the following settings will be available:

Setting Name	Selectable Options			
Headlight Off Delay — If Equipped	0 sec	30 sec	60 sec	90 sec
NOTE: When the "Headlight Off Delay" feature is selected, it allows the adjustment of the amount of time the headlights remain on after the engine is shut off.				
Headlights With Wipers — If Equipped	☐		☑	
Illuminated Approach	0 sec	30 sec	60 sec	90 sec
NOTE: When this feature is selected, it allows the adjustment of the amount of time the headlights remain on after the doors are unlocked with the key fob.				
Auto High Beams — If Equipped	On		Off	

Setting Name	Selectable Options	
NOTE: When the "Automatic High Beam Headlamps" is selected, the high beam headlights will activate/deactivate automatically under certain conditions.		
Daytime Running Lights	Yes	No
Steering Directed Lights — If Equipped	On	Off
NOTE: When the "Steering Directed Lights" feature is selected, the headlights will turn relative to a change in direction of the steering wheel.		
Flash Lights With Lock	On	Off

Doors & Locks

After pressing the "Doors & Locks" button on the touchscreen, the following settings will be available:

Setting Name	Selectable Options	
Auto Door Locks	On	Off
NOTE: The "Auto Door Locks" feature locks all doors automatically when the vehicle reaches a speed of 15 mph (24 km/h).		

Setting Name	Selectable Options	
Auto Unlock On Exit	On	Off
NOTE: When the "Auto Unlock On Exit" feature is selected, all doors will unlock when the vehicle is stopped and the transmission is in the PARK or NEUTRAL position and the driver's door is opened.		
Flash Lights With Lock	On	Off
Sound Horn With Lock	On	Off
Sound Horn With Remote Start	On	Off
Passive Entry (Keyless Enter-N-Go) — If Equipped	On	Off
Remote Door Unlock Order	Driver	All
NOTE: When "Driver" is selected, only the driver's door will unlock on the first push of the key fob unlock button, you must push the key fob unlock button twice to unlock the passenger's doors. When "All" is selected, all of the doors will unlock on the first press of the key fob unlock button. If "All" is programmed, all doors will unlock no matter which Passive Entry equipped door handle is grasped. If "Driver" is programmed, only the driver's door will unlock when the driver's door is grasped. Touching the handle more than once will only result in the driver's door opening once. If the driver's door is opened, the interior door lock/unlock switch can be used to unlock all doors (or use the key fob).		

Auto-On Comfort & Remote Start

After pressing the "Auto-On Comfort & Remote Start" button on the touchscreen, the following settings will be available:

Setting Name	Selectable Options	
Auto-On Driver Heated Seat & Steering Wheel With Vehicle Start— If Equipped	☐	☑
NOTE: When this feature is selected the driver's heated seat and heated steering wheel (if equipped) will automatically turn on when temperatures are below 40° F (4.4° C).		

Engine Off Options

After pressing the "Engine Off Options" button on the touchscreen, the following settings will be available:

Setting Name	Selectable Options			
Engine Off Power Delay	0 sec	45 sec	5 min	10 min
NOTE: When the "Engine Off Power Delay" feature is selected, the power window switches, radio, Uconnect phone system (if equipped), DVD video system (if equipped), power sunroof (if equipped), and power outlets will remain active for up to ten minutes after the ignition is cycled to OFF. Opening either front door will cancel this feature.				

Setting Name	Selectable Options			
Headlight Off Delay	0 sec	30 sec	60 sec	90 sec
NOTE: When the "Headlight Off Delay" feature is selected, it allows the adjustment of the amount of time the headlights remain on after the engine is shut off.				

Compass Settings

After pressing the "Compass Settings" button on the touchscreen, the following settings will be available:

Setting Name	Selectable Options														
Compass Variance	1	2	3	4	5	6	7	8	9	10	11	12	13	14	15
NOTE: When the "Compass Variance" feature is selected, it allows the compass variance to be set to any number from 1 to 15 per the compass variance zone map figure. Compass Variance is the difference between Magnetic North and Geographic North. To compensate for the differences the variance should be set for the zone where the vehicle is being driven, illustrated in the zone map. Once properly set, the compass will automatically compensate for the differences when calibrated, and provide the most accurate compass headings.															
Compass Calibration	Yes														

Setting Name	Selectable Options
NOTE: Press “Compass Calibration” on the touchscreen to enter calibration. To start calibration of the compass, press the “Yes” button on the touchscreen and complete one or more 360-degree turns (in an area free from large metal or metallic objects). A message will appear on the touchscreen when the compass has been successfully calibrated. Keep magnetic materials away from the rear view mirror, such as Mobile Phones, Laptops, and Radar Detectors. This is where the compass module is located, and it can cause interference with the compass sensor, and it may give false readings.	

Compass Variance Zone Map

Audio

After pressing the “Audio” button on the touchscreen, the following settings will be available:

Setting Name	Adjustable Options				
Equalizer	Bass		Mid		Treble
NOTE: When in this display you may adjust the “Bass”, “Mid”, and “Treble” settings. Adjust the settings with the “+” and “–” setting buttons on the touchscreen or by selecting any point on the scale between the “+” and “–” buttons on the touchscreen. Bass/Mid/Treble also allow you to simply slide your finger up or down to change the setting as well as press directly on the desired setting.					
Balance/Fade	Up Arrow Button	Down Arrow Button	Left Arrow Button	Right Arrow Button	Center “C” Button
NOTE: When in this display you may adjust the “Balance/Fade” of the audio by using the “Arrow” button on the touchscreen to adjust the sound level from the front and rear or right and left side speakers. Press the “Center ‘C’ Button” on the touchscreen to reset the balance and fade to the factory setting.					
Speed Adjusted Volume	Off	1		2	3
Music Info Cleanup	On		Off		
NOTE: The “Music Info Cleanup” feature helps organize music files for optimized music navigation.					
Surround Sound — If Equipped	On		Off		

Phone/Bluetooth

After pressing the "Phone/Bluetooth" button on the touch-screen, the following settings will be available:

Setting Name	Selectable Options
Paired Phones	List of Paired Phones
NOTE: This feature shows which phones are paired to the Phone/Bluetooth system. For further information, refer to the Uconnect Owner's Manual Supplement.	

Sirius Setup

After pressing the "SiriusXM Setup" button on the touch-screen, the following settings will be available:

Setting Name	Selectable Options
Channel Skip	List of Channels
NOTE: SiriusXM can be programmed to designate a group of channels that are the most desirable to listen to or to exclude undesirable channels while scanning. This feature allows you to select the channels you would like to skip.	

Setting Name	Selectable Options
Subscription Info	Sirius ID

NOTE:
New vehicle purchasers or lessees will receive a free limited time subscription to SiriusXM Satellite Radio with your radio. Following the expiration of the free services, it will be necessary to access the information on the Subscription Information screen to re-subscribe.

1. Press the "Subscription Info" button on the touchscreen to access the Subscription Information screen.
2. Write down the Sirius ID numbers for your receiver. To reactivate your service, either call the number listed on the screen or visit the provider online.

SiriusXM Travel Link is a separate subscription.

Customer Programmable Features — Uconnect 3/3 NAV Settings

Press the "More" button on the touchscreen, then press the "Settings" button on the touchscreen to display the menu setting screen. In this mode the Uconnect system allows you to access programmable features that may be equipped such as Display, Clock, Safety/Assistance, Lights, Doors & Locks, Auto-On Comfort & Remote Start, Engine Off Operation, Compass Settings, Audio, Phone/Bluetooth and SIRIUS Setup.

Press the “More” button on the touchscreen, then press the “Settings” button on the touchscreen to display the menu setting screen. In this mode the Uconnect system allows you to access programmable features that may be equipped such as Display, Clock, Safety/Assistance, Lights, Doors & Locks, Auto-On Comfort & Remote Start, Engine Off Operation, Compass Settings, Audio, Phone/Bluetooth.

NOTE: Only one touchscreen area may be selected at a time.

When making a selection, press the button on the touchscreen to enter the desired mode. Once in the desired mode, press and release the preferred setting until a check-mark appears next to the setting, showing that setting has been selected.

Once the setting is complete press the Back Arrow button on the touchscreen to return to the previous menu or press the “X” button on the touchscreen to close out of the settings screen. Pressing the Up or Down Arrow buttons on the touchscreen on the right side of the screen will allow you to toggle up or down through the available settings.

Display

After pressing the Display button on the touchscreen, the following settings will be available:

Setting Name	Selectable Options		
Display Mode	Day	Night	Auto
Display Brightness With Headlights ON	+		-
NOTE: To make changes to the "Display Brightness with Headlights ON" setting, the headlights must be on and the interior dimmer switch must not be in the "party" or "parade" positions.			
Display Brightness With Headlights OFF	+		-
NOTE: To make changes to the "Display Brightness with Headlights OFF" setting, the headlights must be off and the interior dimmer switch must not be in the "party" or "parade" positions.			
Set Language	☐		☑
NOTE: When the "Set Language" feature is selected, you may select one of multiple languages (English / Français / Español) for all display nomenclature, including the trip functions and the navigation system (if equipped). Press the "Set Language" button on the touchscreen, then press the desired language button on the touchscreen until a check-mark appears next to the language, showing that setting has been selected.			

Setting Name	Selectable Options	
Units	US	Metric
Voice Response Length	Brief	Detailed
Touchscreen Beep	☐	☑
Navigation Turn-By-Turn In Cluster — If Equipped	☐	☑
NOTE: When the "Navigation Turn-By-Turn In Cluster" feature is selected, the turn-by-turn directions will appear in the instrument cluster display as the vehicle approaches a designated turn within a programmed route.		
Fuel Saver Display In Cluster — If Equipped	☐	☑
NOTE: The "Fuel Saver Display In Cluster" feature turns the "ECO" message on and off in the instrument cluster display.		
Control Screen Time-Out — If Equipped	☐	☑

Clock

After pressing the Clock button on the touchscreen, the following settings will be available.

Setting Name	Selectable Options	
Sync Time With GPS — If Equipped	☐	☑
Set Time Hours	-	+
NOTE: This feature will allow you to adjust the hours. The “Sync time with GPS” button on the touchscreen must be unchecked.		
Set Time Minutes	-	+
NOTE: This feature will allow you to adjust the minutes. The “Sync time with GPS” button on the touchscreen must be unchecked.		
Time Format	12hrs	24hrs
Show Time in Status Bar — If Equipped	☐	☑

Safety & Driving Assistance

After pressing the Safety/Assistance button on the touch-screen, the following settings will be available:

Setting Name	Selectable Options		
Park Assist — If Equipped	Off	Sound Only	Sounds and Display
NOTE: The Rear Park Assist system will scan for, and the alert the driver of, objects behind the vehicle when the transmission gear selector is in REVERSE and the vehicle speed is less than 11 mph (18 km/h).			
Park Assist Volume	Low	Med	High
ParkView Backup Camera	☐	☑	
NOTE: Your vehicle may be equipped with the ParkView Rear Back Up Camera that allows you to see an on-screen image of the rear surroundings of your vehicle whenever the gear selector is put into REVERSE. The image will be displayed on the radio touchscreen display along with a caution note to “check entire surroundings” across the top of the screen. After five seconds, this note will disappear. The ParkView camera is located on the rear of the vehicle above the rear license plate.			
Hill Start Assist — If Equipped	On	Off	

Lights

After pressing the Lights button on the touchscreen, the following settings will be available:

Setting Name	Selectable Options			
Headlight Off Delay	0 sec	30 sec	60 sec	90 sec
NOTE: When the "Headlight Off Delay" feature is selected, it allows the adjustment of the amount of time the headlights remain on after the engine is shut off.				
Headlights With Wipers — If Equipped	☐		☑	
Headlight Illuminated On Approach	0 sec	30 sec	60 sec	90 sec
NOTE: When the "Headlight Illumination On Approach" feature is selected, it allows the adjustment of the amount of time the headlights remain on after the doors are unlocked with the key fob.				

Setting Name	Selectable Options	
Auto Dim High Beams— If Equipped	☐	☑
NOTE: When the “Auto Dim High Beams” feature is selected, the high beam headlights will activate/deactivate automatically under certain conditions.		
Daytime Running Lights — If Equipped	☐	☑
Steering Directed Headlights — If Equipped	☐	☑
NOTE: The “Steering Directed Headlights” feature causes the headlights to turn relative to a change in direction of the steering wheel.		
Flash Lights With Lock	☐	☑

Doors & Locks

After pressing the Doors & Locks button on the touch-screen, the following settings will be available:

Setting Name	Selectable Options	
Auto Door Locks — If Equipped	☐	☑
NOTE: When the "Auto Door Locks" feature is selected, all doors will lock automatically when the vehicle reaches a speed of 12 mph (20 km/h).		
Auto Unlock On Exit	☐	☑
NOTE: When this feature is selected, all doors will unlock when the vehicle is stopped, the transmission is in the PARK or NEUTRAL position and the driver's door is opened.		
Flash Lights With Lock	☐	☑
Sound Horn With Lock	☐	☑

Setting Name	Selectable Options	
Sound Horn With Remote Start	☐	☑
1st Press Of Key Fob Unlocks	Driver Door	All Doors
NOTE: When "Driver Door" is selected with 1st Press Of Key Fob Unlocks, only the driver's door will unlock with the first press of the key fob unlock button. You must press the key fob unlock button twice to unlock the passenger's doors. When "All Doors" is selected for 1st Press Of Key Fob Unlocks, all doors will unlock on the first press of the key fob unlock button. If the vehicle is programmed 1st Press Of Key Fob Unlocks "All Doors," all doors will unlock no matter which Passive Entry equipped door handle is grasped. If 1st Press Of Key Fob Unlocks "Driver Door" is programmed, only the driver's door will unlock when the driver's door is grasped. With Passive Entry, if 1st Press Of Key Fob Unlocks "Driver Door" is programmed, touching the handle more than once will result in only the driver's door opening. If "Driver Door" is selected, once the driver door is opened, the interior door lock/unlock switch can be used to unlock all doors (or use key fob).		
Passive Entry — If Equipped	☐	☑
NOTE: The "Passive Entry" feature allows you to lock and unlock the vehicles door(s) without having to push the key fob lock or unlock buttons.		

Auto-On Comfort & Remote Start

After pressing the Auto-On Comfort & Remote Start button on the touchscreen, the following settings will be available:

Setting Name	Selectable Options	
Auto-On Driver Heated Seat & Steering Wheel With Vehicle Start— If Equipped	☐	☑
NOTE: When this feature is selected the driver's heated seat and heated steering wheel (if equipped) will automatically turn ON when temperatures are below 40° F (4.4° C).		
Sound Horn With Remote Start	☐	☑

Engine Off Options

After pressing the "Engine Off Options" button on the touchscreen, the following settings will be available:

Setting Name	Selectable Options			
Engine Off Power Delay	0 seconds	45 seconds	5 minutes	10 minutes

Setting Name	Selectable Options	
NOTE: When the "Engine Off Power Delay" feature is selected, the power window switches, radio, Uconnect phone system (if equipped), DVD video system (if equipped), power sunroof (if equipped), and power outlets will remain active for up to ten minutes after the ignition is cycled to OFF. Opening either front door will cancel this feature.		
Headlight Off Delay	-	+
NOTE: When the "Headlight Off Delay" feature is selected, it allows the adjustment of the amount of time the headlights remain on after the engine is shut off. Press the "+" or "-" buttons to transition from 0 seconds to 30, 60, or 90 seconds.		

Compass Settings — If Equipped

After pressing the "Compass Settings" button on the touchscreen, the following settings will be available:

NOTE: Before compass calibration is performed, the compass variance zone should be set for best results.

Setting Name	Selectable Options														
Compass Variance	1	2	3	4	5	6	7	8	9	10	11	12	13	14	15
NOTE: When the "Compass Variance" feature is selected, it allows the compass variance to be set to any number from 1 to 15 per the compass variance zone map figure. Compass Variance is the difference between Magnetic North and Geographic North. To compensate for the differences the variance should be set for the zone where the vehicle is being driven, illustrated in the zone map. Once properly set, the compass will automatically compensate for the differences when calibrated, and provide the most accurate compass headings.															

Setting Name	Selectable Options
Perform Compass Calibration	Start

NOTE:
To start calibration of the compass, press the "Start" button on the touchscreen and complete one or more 360-degree turns (in an area free from large metal or metallic objects). A message will appear on the touchscreen when the compass has been successfully calibrated.
Keep magnetic materials away from the rear view mirror, such as Mobile Phones, Laptops, and Radar Detectors. This is where the compass module is located, and it can cause interference with the compass sensor, and it may give false readings.

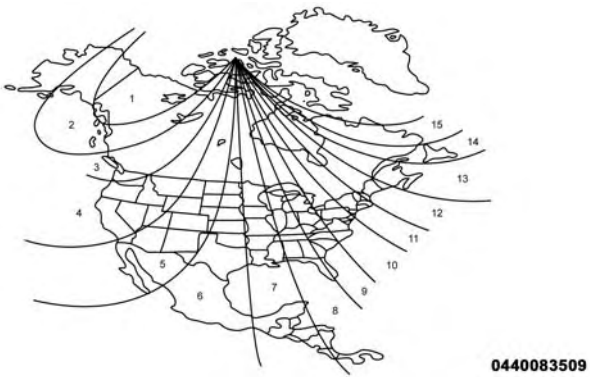

Compass Variance Zone Map

Audio

After pressing the Audio button on the touchscreen, the following settings will be available.

Setting Name	Adjustable Options				
Equalizer	Bass		Mid		Treble
NOTE: When in this display you may adjust the “Bass”, “Mid”, and “Treble” settings. Adjust the settings with the “+” and “–” setting buttons on the touchscreen or by selecting any point on the scale between the “+” and “–” buttons on the touchscreen. Bass/Mid/Treble also allow you to simply slide your finger up or down to change the setting as well as press directly on the desired setting.					
Balance/Fade	Up Arrow Button	Down Arrow Button	Left Arrow Button	Right Arrow Button	Center “C” Button
NOTE: When in this display you may adjust the “Balance/Fade” of the audio by using the “Arrow” button on the touchscreen to adjust the sound level from the front and rear or right and left side speakers. Press the “Center ‘C’ Button” on the touchscreen to reset the balance and fade to the factory setting.					
Speed Adjusted Volume	Off	1		2	3
Music Info Cleanup	On		Off		
NOTE: The “Music Info Cleanup” feature helps organize music files for optimized music navigation.					

Setting Name	Adjustable Options	
Auto Play	On	Off
NOTE: When the "Auto Play" feature is on, music will begin playing music automatically whenever an audio device is connected and recognized.		

Phone/Bluetooth

After pressing the "Phone/Bluetooth" button on the touch-screen, the following settings will be available:

Setting Name	Selectable Options
Paired Devices	List of Paired Devices
NOTE: This feature shows which devices are paired to the Phone/Bluetooth system. For further information, refer to the Uconnect Owner's Manual Supplement.	

SiriusXM Setup

After pressing the "SIRIUS Setup" button on the touch-screen, the following settings will be available:

Setting Name	Selectable Options
Channel Skip	List of Channels

Setting Name	Selectable Options
NOTE: SiriusXM can be programmed to designate a group of channels that are the most desirable to listen to or to exclude undesirable channels while scanning. This feature allows you to select the channels you would like to skip.	
Subscription Info	Sirius ID
NOTE: New vehicle purchasers or lessees will receive a free limited time subscription to SiriusXM Satellite Radio with your radio. Following the expiration of the free services, it will be necessary to access the information on the Subscription Information screen to re-subscribe. 1. Press the “Subscription Info” button on the touchscreen to access the Subscription Information screen. 2. Write down the Sirius ID numbers for your receiver. To reactivate your service, either call the number listed on the screen or visit the provider online. SiriusXM Travel Link is a separate subscription.	

Accessibility — If Equipped

After pressing the "Accessibility" button on the touch-screen, the following settings will be available:

Setting Name	Selectable Options	
Accessibility	On	Off
NOTE: The "Accessibility" feature announces a function prior to performing the action selected when using DVD functions, when it is activated. For example, when activated, and the "Play" button is selected, the system will announce "Play button selected", and then once pressed again the "Play" button will perform its action.		

STEERING WHEEL AUDIO CONTROLS

The remote sound system controls are located on the rear surface of the steering wheel. The left and right-hand controls are rocker-type switches with a pushbutton in the center of each switch. Reach behind the steering wheel to access the switches.

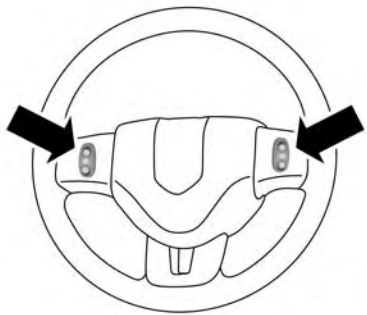

0313118859US

Remote Sound Controls (Back View Of Steering Wheel)

Right-Hand Switch Functions

- Push the top of the switch to increase the volume.
- Push the bottom of the switch to decrease the volume.
- Push the button in the center of the switch to change modes (i.e., AM, FM, etc.).

Left-Hand Switch Functions For Radio Operation

- Push the top of the switch to SEEK the next listenable station up from the current setting.
- Push the bottom of the switch to SEEK the next listenable station down from the current setting.
- Push the button in the center of the switch to tune to the next preset that you have programmed.

Left-Hand Switch Functions For Media (i.e., CD) Operation

- Push the top of the switch once to listen to the next track.
- Push the bottom of the switch once either to listen to the beginning of the current track or to listen to the beginning of the previous track if it is within eight seconds after the current track begins to play.
- Push the switch up or down twice to listen to the second track, three times to listen to the third track, and so forth.
- Push the button located in the center of the switch to change to the next preset that you have programmed.

IPOD/USB/MP3 CONTROL

This feature allows an iPod or external USB device to be plugged into the USB port.

iPod control supports Mini, 4G, Photo, Nano, 5G iPod and iPhone devices. Some iPod software versions may not fully support the iPod control features. Please visit Apple's website for software updates.

For further information, refer to the Uconnect Owner's Manual Supplement.

UCONNECT MULTIMEDIA — VIDEO ENTERTAINMENT SYSTEM (VES) — IF EQUIPPED

Your rear seat Video Entertainment System (VES) is designed to give your family years of enjoyment. You can play your favorite CDs or DVDs, listen to audio over the wireless headphones, or plug and play a variety of standard video games or audio devices. Please review this Owner's Manual to become familiar with its features and operation.

NOTE: The screen is located in the 2nd row overhead console.

Getting Started

- **Screen located in the overhead console**: Unfold the overhead LCD screen by pushing the button on the overhead console behind the screen.

Overhead Video Screen

- With the ignition switch in the ON or ACC position, turn the radio on by pushing the ON/OFF Volume Control knob.
- When the Video Screen is open and a DVD is inserted into the radio, the screen turns on automatically, the headphone transmitters turn on and playback begins.

Single Video Screen

NOTE: Typically there are two different ways to operate the features of the Video Entertainment System (VES).

- The Remote Control
- The Touchscreen Radio (If Equipped)

Play Video Games

Connect the video game console to the Auxiliary RCA input jacks located on the back of the center console.

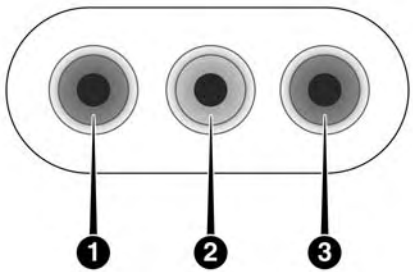

0313118857US

Audio/Video RCA Jacks (AUX Jacks) on the rear of the center console enable the monitor to display video directly from a video camera, connect video games for display on the screen, or play music directly from an MP3 player.

1. Video in (yellow).
2. Left audio in (white).
3. Right audio in (red).

When connecting an external source to the AUX input, be sure to follow the standard color coding for the VES jacks:

NOTE: Certain high-end video games consoles will exceed the power limit of the vehicle's Power Inverter. Refer to the Power Inverter section within "Internal Equipment" in "Getting To Know Your Vehicle".

Ensure the remote control channel selector switch and Headphone switch (IR channel) are the same number.

Using The Remote Control

1. Push the MODE button on the Remote Control.
2. While looking at the video screen, highlight VES AUX 2, by either pushing Up/Down/Left/Right buttons or by repeatedly pushing the MODE button, then push ENTER on the Remote Control.

Using The Touchscreen Radio Controls

1. Press the "MORE" button on the touchscreen.
2. Press the "Rear Entertainment" button on the touchscreen to display the Rear Entertainment Controls.
3. If the Rear Entertainment is turned off, press the "Power" button on the touchscreen.
4. Press the "1" or "2" button on the touchscreen for the channel desired and press the "Source" button on the touchscreen to select the desired mode.

Listen To An Audio Source On Channel 2 While A Video Is Playing On Channel 1

Ensure the Remote Control and Headphone switch is on Channel 2.

Using The Remote Control

1. Push the MODE button on the Remote Control and the Mode Select Screen will display, unless a video is playing then only a small banner will appear on the bottom of the screen.

2. While looking at the video screen, either press Up/Down/Left/Right on the Remote Control to highlight the desired audio source or repeatedly push the MODE button on the remote until the desired audio source appears on the screen.

Using The Touchscreen Radio Controls

1. Press the "MORE" button on the touchscreen.
2. Press the "Rear Entertainment" button on the touchscreen to display the Rear Entertainment Controls.
3. If the Rear Entertainment is turned off, press the "Power" button on the touchscreen.
4. Press the "1" or "2" button on the touchscreen for the channel desired and press the "Source" button on the touchscreen to select the desired mode.

Play A DVD Using The Touchscreen Radio

Insert the DVD with the label facing up. The radio automatically selects the appropriate mode after the disc is recognized and displays the menu screen or starts playing the first track.

Using The Remote Control

1. Push the MODE button on the Remote Control.
2. While looking at the Video Screen, highlight DISC by either pushing Up/Down/Left/Right buttons or by repeatedly pushing the MODE button, then push ENTER.

NOTE:

- The VES system will retain the last setting when turned off.
- Viewing a DVD on the Touchscreen radio screen is not available in some regions or locations, the vehicle must be stopped, and the gear selector must be in the PARK position. Refer to local and state laws.

Using The Touchscreen Radio Controls

1. Press the "MORE" button on the touchscreen.
2. Press the "Rear Entertainment" button on the touchscreen to display the Rear Entertainment Controls.
3. If the Rear Entertainment is turned off, press the "Power" button on the touchscreen.
4. Press the "1" or "2" button on the touchscreen for the channel desired and press the "Source" button on the touchscreen to select the desired mode.

VES Remote Control — If Equipped

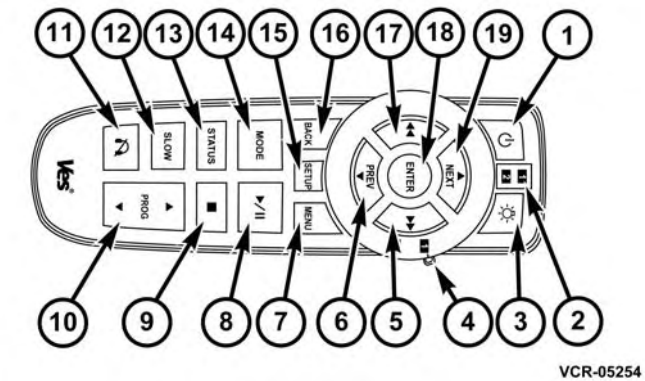

VES Remote Control

Controls And Indicators

1. Power – Turns the screen and wireless headphone transmitter for the selected Channel on or off. To hear audio while the screen is closed, push the Power button to turn the headphone transmitter on.
2. Channel Selector Indicators – When a button is pushed, the currently affected channel or channel button is illuminated momentarily.
3. Light – Turns the remote control backlighting on or off. The remote backlighting turns off automatically after five seconds.
4. Channel/Screen Selector Switch – Indicates which channel is being controlled by the remote control. When the selector switch is in the Channel 1 position, the remote controls the functionality of headphone Channel 1 (right side of the screen). When the selector switch is in the Channel 2, position the remote controls the functionality of headphone Channel 2 (left side of the screen).
5. ▶▶ – In radio modes, push to seek the next tunable station. In disc modes, push and hold to fast forward through the current audio track or video chapter. In menu modes use to navigate in the menu.
6. ▼ / Prev – In radio modes, push to select to the previous station. In disc modes, push to advance to the start of the current or previous audio track or video chapter. In menu modes, use to navigate in the menu.

7. MENU – Push to return to the main menu of a DVD disc, to select a satellite audio or video channel from the Station list, or select playback modes (SCAN/RANDOM for a CD).
8. ► / ‖ (Play/Pause) – Begin/resume or pause disc play.
9. ▪ (Stop) – Stops disc play.
10. PROG Up/Down – When listening to a radio mode, pushing PROG Up selects the next preset and pushing PROG Down selects the previous preset stored in the radio.
11. MUTE – Push to mute the headphone audio output for the selected channel.
12. SLOW – Push to slow playback of a DVD disc. Push play (►) to resume normal play.
13. STATUS – Push to display the current status.
14. MODE – Push to change the mode of the selected channel. See the Mode Selection section of this manual for details on changing modes.
15. SETUP – When in a video mode, push the SETUP button to access the display settings (see the display settings section) to access the DVD setup menu, select the menu button on the radio. When a disc is loaded in the DVD player (if equipped) and the VES mode is selected and the disc is stopped, push the SETUP button to access the DVD Setup menu. (see the DVD Setup Menu of this manual.)
16. BACK – When navigating in menu mode, push to return to the previous screen. When navigating a DVDs disc menu, the operation depends on the disc's contents.
17. ◄◄ – In radio modes, push to seek to the previous tunable station. In disc modes, push and hold to fast rewind through the current audio track or video chapter. In menu modes use to navigate in the menu.
18. ENTER – Push to select the highlighted option in a menu.
19. ▲ / NEXT – In radio modes, push to select to the next station. In disc modes, push to advance to the next audio track or video chapter. In menu modes, use to navigate in the menu.

Remote Control Storage

The video screen comes with a built in storage compartment for the remote control which is accessible when the screen is opened. To remove the remote, use your index finger to pull and rotate the remote towards you. Do not try to pull the remote straight down as it will be very difficult to remove. To return the remote back into its storage area, insert one long edge of the remote into the two retaining clips first, and then rotate the remote back up into the other two retaining clips until it snaps back into position.

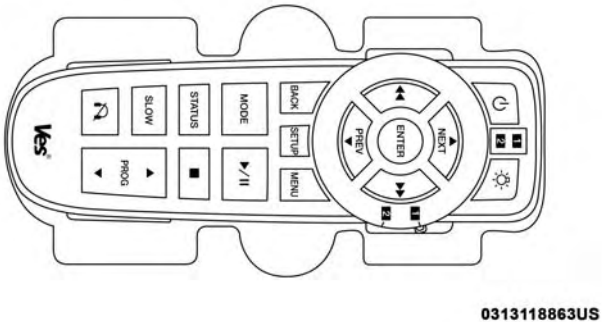

VES Remote Control Storage

Locking The Remote Control

All remote control functionality can be disabled as a parental control feature.

1. Press the “MORE” button on the touchscreen.
2. Press the “Rear Entertainment” button on the touchscreen to display the Rear Entertainment Controls.
3. Press the “Lock-out” button on the touchscreen to lock the remote control. Pressing the “Lock-out” button on the touchscreen a second time will unlock the remote control.

NOTE: Remote control lock-out will only apply to the current ignition cycle. The VES will automatically remove the lock-out if the ignition is cycled to “OFF”.

Replacing The Remote Control Batteries

The remote control requires two AAA batteries for operation. To replace the batteries:

1. Locate the battery compartment on the back of the remote, then slide the battery cover downward.
2. Replace the batteries, making sure to orient them according to the polarity diagram shown.
3. Replace the battery compartment cover.

Important Notes For Single Video Screen System

- VES is able to transmit two channels of stereo audio simultaneously.
- In split screen mode the left side equates to Channel 1 and right side equates to Channel 2.
- If a video source is selected on Channel 1, then Channel 2 is for audio only.
- When selecting a video source on Channel 1, the video will display on the screen and the audio will be heard on Channel 1 in the headphones.
- Audio can be heard through the headphones even when the Video Screen is closed.

VES Headphones Operation

The headphones receive two separate channels of audio using an infrared transmitter from the video screen.

If no audio is heard after increasing the volume control, verify that the screen is turned on and in the down position and that the channel is not muted and the headphone channel selector switch is on the desired channel. If audio is still not heard, check that fully charged batteries are installed in the headphones.

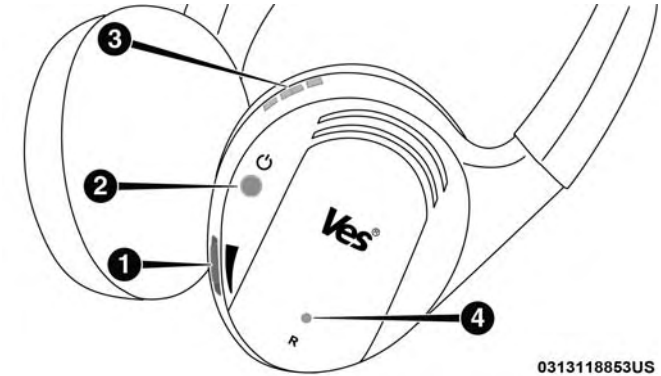

VES Headphones

1 — Volume Control	3 — Channel Selection Switch
2 — Power Button	4 — Power Indicator

Controls

The headphone power indicator and controls are located on the right ear cup.

NOTE: The rear video system must be turned on before sound can be heard from the headphones. To conserve battery life, the headphones will automatically turn off approximately three minutes after the rear video system is turned off.

Changing The Audio Mode For Headphones

1. Ensure the Remote Control channel/screen selector switch is in the same position as the headphone selector switch.

NOTE:

- When both switches are on Channel 1, the Remote is controlling Channel 1 and the headphones are tuned to the audio of the VES Channel 1.
- When both switches are on Channel 2, the Remote is controlling Channel 2 and the headphones are tuned to the audio of the VES Channel 2.

2. Push the MODE button on the remote control.
3. If the video screen is displaying a video source (such as a DVD Video), pushing STATUS shows the status on a popup banner at the bottom of the screen. Pushing the MODE button will advance to the next mode. When the mode is in an audio only source (such as FM), the Mode Selection menu appears on screen.
4. When the Mode Selection menu appears on screen, use the cursor buttons on the remote control to navigate to the available modes and push the ENTER button to select the new mode.
5. To cancel out of the Mode Selection menu, push the BACK button on the remote control.

Replacing The Headphone Batteries

Each set of headphones requires two AAA batteries for operation. To replace the batteries:

1. Locate the battery compartment on the left ear cup of the headphones, and then slide the battery cover downward.
2. Replace the batteries, making sure to orient them according to the polarity diagram shown.
3. Replace the battery compartment cover.

Accessibility

Accessibility is a feature of the DVD system that announces a function prior to performing the action. The first time a button is pressed the system will identify the button, and will enact the function of the button the second time it is pressed. For further information refer to “Uconnect Settings” in “Multimedia.”

Unwired Stereo Headphone Lifetime Limited Warranty

Who Does This Warranty Cover? This warranty covers the initial user or purchaser (″you″ or ″your″) of this particular Unwired Technology LLC (″Unwired″) wireless headphone (″Product″). The warranty is not transferable.

How Long Does The Coverage Last? This warranty lasts as long as you own the Product.

What Does This Warranty Cover? Except as specified below, this warranty covers any Product that in normal use is defective in workmanship or materials.

What Does This Warranty Not Cover? This warranty does not cover any damage or defect that results from misuse, abuse or modification of the Product other than by Unwired. Foam earpieces, which will wear over time through normal use, are specifically not covered (replacement foam is available for a nominal charge). UNWIRED TECHNOLOGY IS NOT LIABLE FOR ANY INJURIES OR DAMAGES TO PERSONS OR PROPERTY RESULTING FROM THE USE OF, OR ANY FAILURE OR DEFECT IN, THE PRODUCT, NOR IS UNWIRED LIABLE FOR ANY GENERAL, SPECIAL, DIRECT, INDIRECT, INCIDENTAL, CONSEQUENTIAL, EXEMPLARY, PUNITIVE OR OTHER DAMAGES OF ANY KIND OR NATURE WHATSOEVER. Some states and jurisdictions may not allow the exclusion or limitation of incidental or consequential damages, so the above limitation may not apply to you. This warranty gives you specific legal rights. You may also have other rights, which vary from jurisdiction to jurisdiction.

What Will Unwired Do? Unwired, at its option, will repair or replace any defective Product. Unwired reserves the right to replace any discontinued Product with a comparable model. THIS WARRANTY IS THE SOLE WARRANTY FOR THIS PRODUCT, SETS FORTH YOUR EXCLUSIVE REMEDY REGARDING DEFECTIVE PRODUCTS, AND IS IN LIEU OF ALL OTHER WARRANTIES (EXPRESS OR IMPLIED), INCLUDING ANY WARRANTY OR MERCHANTABILITY OR FITNESS FOR A PARTICULAR PURPOSE.

If you have any questions or comments regarding your Unwired wireless headphones, please phone 1-888-293-3332 or email customersupport@unwiredtechnology.com.

You may register your Unwired wireless headphones by phone at 1-888-293-3332.

System Information

Shared Modes

This allows the VES to output radio sources to the headphones and the radio to output VES sources to the vehicle speakers. When the radio and VES channel 1 or 2 are in the same (shared) mode, a VES icon will be visible on the radio's display for that channel, and the shared icon will be visible on the VES screen. When in shared mode, the same audio source is heard in the shared headphone channel 1 or channel 2.

If the radio functions (FM, AM, or SAT) are in the shared mode with the VES, only the radio is able to control the radio functions. In this case, VES can share the radio mode, but not change stations until the radio mode is changed to a mode that is different from the VES selected radio mode. When shared, the radio has priority for all radio modes (FM, AM). The VES has the ability to switch tuner (AM/FM), SEEK, TUNE, and recall presets in radio modes as long as it is not in shared mode.

When in shared disc both the radio and the VES have control of the video functions. The VES has the ability to control the following video modes:

NOTE:

- CD: Ability to Fast Forward, Rewind, and Track Up/Down.

The VES can even control radio modes or video modes while the radio is turned off. The VES can access the radio modes or disc modes by navigating to those modes on the VES and activating a radio mode or disc mode.

Information Mode Display

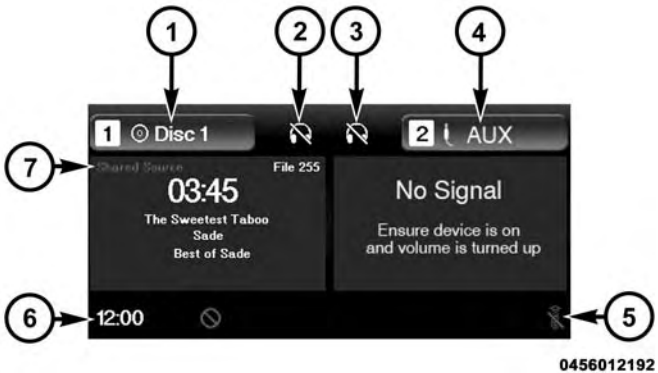

Information Mode Display

When information mode is active, the current mode setting for both audio channels is displayed. In addition to the items called out by number, the remaining information displays the current status of the source (such as station frequency, name, preset or track number, song title, artist name, album name, etc.).

1. Channel 1 Mode — Displays the current source for Channel 1.
2. Channel 1 Audio Only/Mute — Audio: The audio only icon is not used on Channel 1, in a single screen system. Mute: when the Mute icon is displayed, the audio for Channel 1 has been muted using the remote control's MUTE button.
3. Channel 2 Audio Only/Mute — Audio: Only in a single screen system: The audio only icon is displayed on Channel 2 when Channel 1 is in a video mode. Mute: when the Mute icon is displayed, the audio for Channel 2 has been muted using the remote control's MUTE button.
4. Channel 2 Mode — Displays the current source for Channel 2.
5. Remote Locked Out — When the icon is displayed, the remote control functions are disabled.
6. Clock — Displays the time.
7. Channel 1 Shared Status — When the icon is displayed, the audio for Channel 1 is also shared with the radio and playing through the cabin speakers.

Numeric Keypad Menu

Numeric Keypad Menu

When the display for either Channel 1 or Channel 2 shows DIRECT TUNE, pushing the remote control's ENTER button activates a numeric keypad menu. This screen makes it easy to enter a specific tuner frequency or track number. To enter the desired digit:

1. Push the remote control's navigation buttons (▲, ▼, ►, ◄) to navigate to the desired digit.
2. When the digit is highlighted, push the remote control's ENTER button to select the digit. Repeat these steps until all digits are entered.
3. To delete the last digit, navigate to the Del button and push the remote control's ENTER button.
4. After all of the digits are entered, navigate to the Go button and push the remote control's ENTER button.

Station List Menu

When listening to Satellite audio, pushing the remote control's MENU button displays a list of all available channels. Navigate this list using the remote control's navigation buttons to find the desired station, push the remote control's ENTER button to tune to that station. To jump through the list more quickly, navigate to the Page Up and Page Down icons on the screen.

Disc Menu

When listening to a CD Audio or CD Data disc, pushing the remote control's MENU button displays a list of all commands which control playback of the disc. Using the options you can activate or cancel Random play.

Options Menu

When watching a video source (DVD Video with the disc in Play mode, Aux Video, etc.), pressing the "Options" button on the touchscreen activates the Options Settings menu. From this menu you can adjust Audio, Subtitles, Angle and Title.

Display Settings

When watching a video source (DVD Video with the disc in Play mode, Aux Video, etc.), pushing the remote control's SETUP button activates the Display Settings menu. These settings control the appearance of the video on the screen. The factory default settings are already set for optimum viewing, so there is no need to change these settings under normal circumstances.

To change the settings, push the remote control's navigation buttons to select an item, then push the remote control's navigation buttons to change the value for the currently selected item. To reset all values back to the original settings, select the Default Settings menu option and push the remote control's ENTER button.

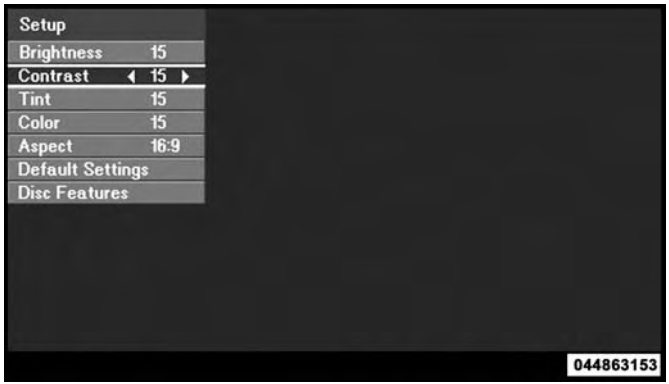

Display Settings Menu

Listening To Audio With The Screen Closed

To listen to only audio portion of the channel with the screen closed:

1. Set the audio to the desired source and channel.
2. Close the video screen.
3. To change the current audio mode, push the remote control's MODE button. This will automatically select the next available audio mode without using the MODE/SOURCE Select menu.

If the screen is closed and there is no audio heard, verify that the headphones are turned on (the ON indicator is illuminated) and the headphone selector switch is on the desired channel. If the headphones are turned on, push the remote control's power button to turn audio on. If audio is still not heard, check that fully charged batteries are installed in the headphones.

Disc Formats

The DVD player is capable of playing the following types of discs (8 cm or 12 cm diameter):

- DVD-Video discs (MPEG-2 video compression) (see notes about DVD Region Codes)
- Audio Compact Discs (CDs)
- CD Data discs with MP3 and WMA compressed audio format files
- Video CDs (MPEG-1 video compression)

DVD Region Codes

The DVD player and many DVD discs are coded by geographic region. These region codes must match in order for the disc to play. If the region code for the DVD disc does not match the region code for the player, the disc will stop playing and a warning will be displayed.

DVD Audio Support

When a DVD-Audio disc is inserted in the DVD player, the DVD-Audio title on the disc is played by default (most DVD-Audio discs also have a Video title, but the Video title is ignored). All multi-channel program material is automatically mixed down to two channels, which may result in a lowered apparent volume level. If you increase the volume level to account for this change in level, remember to lower the volume before changing the disc or to another mode.

Recorded Discs

The DVD player will play CD-R and CD-RW discs recorded in CD-Audio or Video-CD format, or as a CD-ROM containing MP3 or WMA files. The player will also play DVD-Video content recorded to a DVD-R, DVD-RW and DVD-ROM discs.

If you record a disc using a personal computer, there may be cases where the DVD player may not be able to play some or the entire disc, even if it is recorded in a compatible format and is playable on other players. To help avoid playback problems, use the following guidelines when recording discs.

- Open sessions are ignored. Only sessions that are closed are playable.
- For multi-session CDs that contain only multiple CD-Audio sessions, the player will renumber the tracks so each track number is unique.
- For CD Data (or CD-ROM) discs, always use the ISO-9660 (Level 1 or Level 2), Joliet, or UDF format. CD-DA may also be used for PCM Audio contained on CD-Based Data.
- The player recognizes a maximum of 512 files and 99 folders per CD-R and CD-RW disc.
- Mixed media recordable DVD formats will only play the Video_TS portion of the disc.

If you are still having trouble writing a disc that is playable in the DVD player, check with the disc recording software publisher for more information about burning playable discs.

The recommended method for labeling recordable discs (CD-R, CD-RW, DVD-R and DVD-RW) is with a permanent marker. Do not use adhesive labels as they may separate from the disc, become stuck, and cause permanent damage to the DVD player.

Compressed Audio Files (MP3, WMA AND ACC)

The DVD player is capable of playing MP3 (MPEG-1 Audio Layer 3 with data bitrates from 32 to 320 kbit/s, including variable bit rates), WMA (All Standard 8.x, 9.x Windows Media Audio) and ACC (MPEG-4 audio; sampling frequencies 8 to 48 kHz; mono and stereo) audio files with the from a CD Data disc (usually a CD-R or CD-RW).

- The DVD player always uses the file extension to determine the audio format, so MP3 files must always end with the extension ".mp3" or ".MP3", WMA files must always end with the extension ".wma" or "WMA", and ACC files must end with the extensions ".acc" or ".m4a". To prevent incorrect playback, do not use these extensions for any other types of files.
- For MP3 files, ID3 tag data v1, v1.1, v2 and v2.4 (such as artist name, track title, album, etc.) are supported.
- Any file that is copy protected (such as those downloaded from many online music stores) will not play. The DVD player will automatically skip the file and begin playing the next available file.
- Other compression formats such as AAC, MP3 Pro, Ogg Vorbis, and ATRAC3 will not play. The DVD player will automatically skip the file and begin playing the next available file.
- If you are creating your own files, the recommended fixed bit rate for MP3 files is between 96 and 192Kbps and the recommended fixed bit rate for WMA files is between 64 and 192Kbps. Variable bit rates are also supported. For both formats, the recommended sample rate is either 44.1kHz or 48kHz.
- To change the current file, use the remote control's or DVD player's ▲ button to advance to the next file, or the ▼ button to return to the start of the current or previous file.
- To change the current directory, use the remote control's PROG UP and Down buttons or Rewind/skip back and fast fwd/skip forward.

Disc Errors

If the DVD player is unable to read the disc, a "Disc Error" message is displayed on the Radio display and the disc is automatically ejected. A dirty, damaged, or incompatible disc format are all potential causes for a "Disc Error" message.

If a disc has a damaged track which results in audible or visible errors that persists for 2.0 seconds, the DVD player will attempt to continue playing the disc by skipping forward 1.0 to 3.0 seconds at a time. If the end of the disc is reached, the DVD player will return to the beginning of the disc and attempt to play the start of the first track.

The DVD player may shut down during extremely hot conditions, such as when the vehicle's interior temperature is above 120°F (49°C). When this occurs, the DVD player will display "High Temp" and will shut off the display until a safe temperature is reached. This shutdown is necessary to protect the optics of the DVD player.

Product Agreement

This product incorporates copyright protection technology that is protected by U.S. patents and other intellectual property rights. Use of this copyright protection technology must be authorized by Macrovision, and is intended for home or other limited viewing uses otherwise authorized by Macrovision. Reverse engineering or disassembly is prohibited.

Dolby Digital and MLP Lossless Manufactured under license from Dolby Laboratories. "Dolby," "MLP Lossless," and the double-D symbol are trademarks of Dolby Laboratories. Confidential unpublished works. Copyright 1992-1997 Dolby Laboratories. All rights reserved.

UCONNECT PHONE (4.3)

Radio 4.3

Uconnect Phone is a voice-activated, hands-free, in-vehicle communications system. Uconnect Phone allows you to dial a phone number with your mobile phone.

Uconnect Phone supports the following features:

Voice Activated Features:

- Hands Free dialing via Voice ("Call John Smith Mobile" or, "Dial 248-555-1212")
- Redialing last dialed numbers ("Redial")
- Calling Back the last incoming call number ("Call Back")

- View Call logs on screen ("Show incoming calls," "Show Outgoing calls," "Show missed Calls," "Show Recent Calls")
- Searching Contacts phone number ("Search for John Smith Mobile")

Screen Activated Features:

- Dialing via Keypad using touchscreen
- Viewing and Calling contacts from Phonebooks displayed on the touchscreen
- Setting Favorite Contact Phone numbers so they are easily accessible on the Main Phone screen
- Viewing and Calling contacts from Recent Call logs
- Listen to Music on your Bluetooth Device via the touchscreen
- Pairing up to ten phones/audio devices for easy access to connect to them quickly

Your mobile phone's audio is transmitted through your vehicle's audio system; the system will automatically mute your radio when using the Uconnect Phone.

For Uconnect Customer Support:

- U.S. residents – visit UconnectPhone.com or call 1-877-855-8400.
- Canadian Residents - visit UconnectPhone.com or call, 1-800-465-2001 (English) or 1-800-387-9983 (French).

If your mobile phone only supports the Headset Profile you may not be able to use any Uconnect Phone features. Refer to your mobile service provider or the phone manufacturer for details.

Uconnect Phone allows you to transfer calls between the system and your mobile phone as you enter or exit your vehicle and enables you to mute the system's microphone for private conversation.

WARNING!

Any voice commanded system should be used only in safe driving conditions following all applicable laws, including laws regarding phone use. Your attention should be focused on safely operating the vehicle. Failure to do so may result in a collision causing serious injury or death.

The Uconnect Phone is driven through your Bluetooth "Hands-Free Profile" mobile phone. Uconnect features Bluetooth technology - the global standard that enables different electronic devices to connect to each other without wires or a docking station, so Uconnect Phone works no matter where you stow your mobile phone (be it your purse, pocket, or briefcase), as long as your phone is turned on and has been paired to the vehicle's Uconnect Phone. The Uconnect Phone allows up to ten mobile phones or audio devices to be linked to the system. Only one linked (or paired) mobile phone and one audio device can be used with the system at a time. The system is available in English, Spanish, or French languages.

Uconnect Phone Button

The Uconnect Phone Button is used to enter the phone mode and make calls, show recent, incoming, outgoing calls, view phonebook etc., When you press the button you will hear a BEEP. The beep is your signal to give a command.

Uconnect Voice Command Button

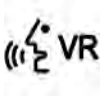

The Uconnect Voice Command Button is only used for "barge in" and when you are already in a call and you want to send Tones or make another call.

The Uconnect Phone is fully integrated with the vehicle's audio system. The volume of the Uconnect Phone can be adjusted either from the radio volume control knob or from the steering wheel radio control (right switch), if so equipped.

Operation

Voice commands can be used to operate the Uconnect Phone and to navigate through the Uconnect Phone menu structure. Voice commands are required after most Uconnect Phone prompts. There are two general methods for how Voice Command works:

1. Say compound commands like "Call John Smith mobile."
2. Say the individual commands and allow the system to guide you to complete the task.

You will be prompted for a specific command and then guided through the available options.

- Prior to giving a voice command, one must wait for the beep, which follows the "Listen" prompt or another prompt.
- For certain operations, compound commands can be used. For example, instead of saying "Call" and then "John Smith" and then "mobile," the following compound command can be said: "Call John Smith mobile."
- For each feature explanation in this section, only the compound command form of the voice command is given. You can also break the commands into parts and say each part of the command when you are asked for it. For example, you can use the compound command form voice command "Search for John Smith," or you can break the compound command form into two voice commands: "Search Contact" and when asked "John Smith." Please remember, the Uconnect Phone works best when you talk in a normal conversational tone, as if speaking to someone sitting a few feet/meters away from you.

Natural Speech

Your Uconnect Phone Voice system uses a Natural Language Voice Recognition (VR) engine.

Natural speech allows the user to speak commands in phrases or complete sentences. The system filters out certain non-word utterances and sounds such as "ah" and "eh." The system handles fill-in words such as "I would like to."

The system handles multiple inputs in the same phrase or sentence such as "make a phone call" and "to Kelly Smith." For multiple inputs in the same phrase or sentence, the system identifies the topic or context and provides the associated follow-up prompt such as "Who do you want to call?" in the case where a phone call was requested but the specific name was not recognized.

The system utilizes continuous dialog; when the system requires more information from the user it will ask a question to which the user can respond without pushing the "Voice Command" button on your steering wheel.

Voice Command Tree

Refer to "Voice Tree" in this section.

Help Command

If you need assistance at any prompt, or if you want to know your options at any prompt, say "Help" following the beep.

To activate the Uconnect Phone from idle, simply push the Phone button on your steering wheel and say a command or say "help." All Uconnect Phone sessions begin with a push of the Phone button on the radio control head.

Cancel Command

At any prompt, after the beep, you can say "Cancel" and you will be returned to the main menu.

You can also push the Phone or Voice Command button on your steering wheel when the system is listening for a command and be returned to the main or previous menu.

Pair (Link) Uconnect Phone To A Mobile Phone

To begin using your Uconnect Phone, you must pair your compatible Bluetooth enabled mobile phone.

To complete the pairing process, you will need to reference your mobile phone Owner's Manual. The Uconnect website may also provide detailed instructions for pairing.

NOTE:

- You must have Bluetooth enabled on your phone to complete this procedure.
- The vehicle must be in PARK.

1. You can do either of the following:
   a. Push the SETTINGS button on the faceplate, page down to the "Phone/Bluetooth" button on the touchscreen, press it and you will see the Paired Phones screen. If there are no paired phones you will see <Empty> as the first device name.
   b. Push the MORE button on the faceplate, then press the "Phone" button on the touchscreen and you will go to the Uconnect Phone main screen. Press the "Settings" button on the touchscreen. If there are no phones currently paired a pop-up will appear. If you select Yes you will go the Paired Phones screen, if you select No you will return to the Uconnect Phone main menu.

2. At the Paired Phones screen press the "Add Device" button on the touchscreen and a pop-up with instructions will appear.
3. Search for available devices on your Bluetooth enabled mobile phone. When prompted on the phone, select the "Uconnect" device and enter the PIN.
4. When the pairing process has successfully completed, the system will prompt you to choose whether or not this is your favorite phone. Selecting Yes will make this phone the highest priority. This phone will take precedence over other paired phones within range.

Pair A Bluetooth Streaming Audio Device

1. Push the PLAYER button on the faceplate to begin.
2. Press the "Source" button on the touchscreen.
3. Change the Source to Bluetooth.
4. Press the "Add Device" button on the touchscreen.
5. Search for available devices on your Bluetooth enabled Audio Device. When prompted on the device, select the "Uconnect" device and enter the PIN.
6. Uconnect Phone will display an in process screen while the system is connecting.
7. When the pairing process has successfully completed, the system will prompt you to choose whether or not this is your favorite device. Selecting Yes will make this device the highest priority. This device will take precedence over other paired devices within range.

NOTE: If No is selected, device priority is determined by the order in which it was paired. The latest device paired will have the higher priority.

You can also use the following VR command to bring up a list of paired audio devices.

- "Show Paired Audio Devices."

Connecting To A Particular Mobile Phone Or Audio Device

Uconnect Phone will automatically connect to the highest priority paired phone and/or Audio Device within range. If you need to choose a particular Phone or Audio Device follow these steps:

1. Push the SETTINGS button on the faceplate.
2. Press the "Phone/Bluetooth" button on the touchscreen.
3. Press to select the particular Phone or the "Phone/Audio" button on the touchscreen and then an Audio Device.

4. At the Options pop-up screen press the "Connect Device" button on the touchscreen.
5. Press the "X" to exit out of the Settings screen.

Disconnecting A Phone Or Audio Device

1. Push the SETTINGS button on the faceplate.
2. Press the "Phone/Bluetooth" button on the touchscreen.
3. Select the Phone or Audio Device.
4. At the Options pop-up screen press the "Disconnect Device" button on the touchscreen.
5. Press the "X" to exit out of the Settings screen.

Deleting A Phone Or Audio Device

1. Push the SETTINGS button on the faceplate.
2. Press the "Phone/Bluetooth" button on the touchscreen.
3. Select the Phone or Audio Device.
4. At the Options pop-up screen press the "Delete Device" button on the touchscreen.
5. Press the "X" to exit out of the Settings screen.

Making A Phone Or Audio Device A Favorite

1. Push the SETTINGS button on the faceplate.
2. Press the "Phone/Bluetooth" button on the touchscreen.
3. Select a different Phone or Audio Device then the currently connected device.
4. At the Options pop-up screen press the "Make Favorite" button on the touchscreen; you will see the chosen device move to the top of the list.
5. Press the "X" to exit out of the Settings screen.

Phonebook Download (Automatic Phonebook Transfer From Mobile Phone) — If Equipped

If equipped and specifically supported by your phone, Uconnect Phone automatically downloads names (text names) and number entries from the mobile phone's phonebook. Specific Bluetooth Phones with Phone Book Access Profile may support this feature. See Uconnect website, UconnectPhone.com, for supported phones.

- To call a name from a downloaded mobile phone book, follow the procedure in the Voice Recognition Quick Reference section.

- Automatic download and update of a phone book, if supported, begins as soon as the Bluetooth wireless phone connection is made to the Uconnect Phone, for example, after you start the vehicle.
- A maximum of 2,000 entries per phone will be downloaded and updated every time a phone is connected to the Uconnect Phone.
- Depending on the maximum number of entries downloaded, there may be a short delay before the latest downloaded names can be used. Until then, if available, the previously downloaded phonebook is available for use.
- Only the phonebook of the currently connected mobile phone is accessible.
- This downloaded phonebook cannot be edited or deleted on the Uconnect Phone. These can only be edited on the mobile phone. The changes are transferred and updated to Uconnect Phone on the next phone connection.

Emergency And Towing Assistance

The 911/Help numbers can only be altered. These can not be deleted or the names can not be changed.

To change the 911/Help number, follow these steps:

1. Press the “Phonebook” button on the touchscreen from the Phone main screen.
2. Press the “911/Help” button on the touchscreen. Press the appropriate listing to alter, Emergency for example.
3. Once Emergency is pressed, the “Edit” button on the touchscreen appears. Press the “Edit” button on the touchscreen and you will be given the choice to Edit Number or Reset to Default.
4. Follow the on-screen prompts to complete the task.

Phone Call Features

The following features can be accessed through the Uconnect Phone if the feature(s) are available on your mobile service plan. For example, if your mobile service plan provides three-way calling, this feature can be accessed through the Uconnect Phone. Check with your mobile service provider for the features that you have.

Ways To Initiate A Phone Call

Listed below are all the ways you can initiate a phone call with Uconnect Phone.

- Redial
- Dial by pressing in the number
- Voice Commands (Dial by Saying a Number, Call by Saying a Phonebook Name, Redial, or Call Back)
- Mobile Phonebook
- Recent Call Log

NOTE: All of the above operations except Redial can be done with one call or less active.

Dial By Saying A Number

1. Push the Phone button to begin.
2. After the "Listening" prompt and the following beep, say "Dial 248-555-1212."
3. The Uconnect Phone will dial 248-555-1212.

Call By Saying A Phonebook Name

1. Push the "VR" button on your steering wheel to begin.
2. After the "Listening" prompt and the following beep, say "Call John Doe Mobile."
3. The Uconnect Phone will dial the number associated with John Doe, or if there are multiple numbers it will ask which number you want to call for John Doe.

Call Controls

The touchscreen allows you to control the following call features:

- Answer
- End
- Ignore
- Hold/unhold
- Mute/unmute
- Transfer the call to/from the phone
- Swap two active calls
- Join two active calls together

Touch-Tone Number Entry

1. Press the "Phone" button on the touchscreen.
2. Press the "Dial" button on the touchscreen.

3. The Touch-Tone screen will be displayed.
4. Use the numbered buttons on the touchscreen to enter the number and press "Call."

To send a touch tone using Voice Recognition (VR), push the Voice Command button while in a call and say "1234#" or you can say "Send Voicemail Password" if Voicemail password is stored in your mobile phonebook.

Recent Calls

You may browse up to 34 of the most recent of each of the following call types:

- Incoming Calls
- Outgoing Calls
- Missed Calls
- All Calls

These can be accessed by touching the recent calls button on the touchscreen on the Phone main screen.

You can also push the Phone button and say "Show my incoming calls" from any screen and the Incoming calls will be displayed.

NOTE: Incoming can also be replaced with "Outgoing", "Recent" or "Missed."

Answer Or Reject An Incoming Call — No Call Currently In Progress

When you receive a call on your mobile phone, the Uconnect Phone will interrupt the vehicle audio system, if on, and will display a pop-up showing Answer or Ignore. Press the Answer button on the touchscreen or push the Phone button on the steering wheel to accept the call.

Answer Or Reject An Incoming Call — Call Currently In Progress

If a call is currently in progress and you have another incoming call, you will hear the same network tones for call waiting that you normally hear when using your mobile phone. Uconnect Phone will then interrupt the vehicle audio system, if on, and will display a pop-up showing Answer, Ignore or Transfer. Push the Phone button to place the current call on hold and answer the incoming call.

NOTE: The Uconnect Phone compatible phones in the market today do not support rejecting an incoming call when another call is in progress. Therefore, the user can only answer an incoming call or ignore it.

Making A Second Call While Current Call Is In Progress

To make a second call while you are currently on a call, push the Voice Command button and say "Dial" or "Call" followed by the phone number or phonebook entry you wish to call. The first call will be on hold while the second call is in progress. Or you can place a call on hold by pressing the "Hold" button on the touchscreen, then dial a number from the dialpad, recent calls or from the phonebooks. To go back to the first call, refer to "Toggling Between Calls" in this section. To combine two calls, refer to "Join Calls" in this section.

Toggling Between Calls

If two calls are in progress (one active and one on hold), push the Phone button until you hear a single beep, indicating that the active and hold status of the two calls have switched. Only one call can be placed on hold at a time. Also you can press the "Swap" button on the touchscreen, on the Phone main screen.

Join Calls

When two calls are in progress (one active and one on hold), press the "Join Calls" button on the Phone main screen to combine all calls into a Conference Call.

Call Termination

To end a call in progress, momentarily press the "End" button on the touchscreen or the Phone button. Only the active call(s) will be terminated and if there is a call on hold, it will become the new active call. If the active call is terminated by the far end, a call on hold may not become active automatically. This is cell phone-dependent.

Redial

1. Press the "Redial" button on the touchscreen, or push the Phone button and after the "Listening" prompt and the following beep, say "Redial."
2. The Uconnect Phone will call the last number that was dialed from your mobile phone.

Call Continuation

Call continuation is the progression of a phone call on the Uconnect Phone after the vehicle ignition key has been switched to OFF.

- After the ignition is switched to OFF, a call can continue on the Uconnect Phone either until the call ends, or until the vehicle battery condition dictates cessation of the call on the Uconnect Phone and transfer of the call to the mobile phone.

Uconnect Phone Features

Emergency Assistance

If you are in an emergency and the mobile phone is reachable:

- Pick up the phone and manually dial the emergency number for your area.

If the phone is not reachable and the Uconnect Phone is operational, you may reach the emergency number as follows:

- Push the Phone button to begin.
- After the "Listening" prompt and the following beep, say "Emergency" and the Uconnect Phone will instruct the paired mobile phone to call the emergency number. This feature is supported in the U.S., Canada, and Mexico.

NOTE:

- The emergency number dialed is based on the country where the vehicle is purchased (911 for the U.S. and Canada and 060 for Mexico). The number dialed may not be applicable with the available mobile service and area.
- The Uconnect Phone does slightly lower your chances of successfully making a phone call as to that for the mobile phone directly.

WARNING!

Your phone must be turned on and connected to the Uconnect Phone to allow use of this vehicle feature in emergency situations, when the mobile phone has network coverage and stays connected to the Uconnect Phone.

Roadside Assistance/Towing Assistance

If you need roadside/towing assistance:

- Push the Phone button to begin.
- After the "Listening" prompt and the following beep, say "Roadside Assistance" or say "Towing Assistance."

NOTE: The roadside/towing assistance number dialed is based on the country where the vehicle is purchased (1-800-521-2779 for U.S., 1-800-363-4869 for Canada, 55-14-3454 for Mexico City and 1-800-712-3040 for outside Mexico City in Mexico). Please refer to the FCA US LLC 24-Hour "Roadside Assistance" coverage details in the Warranty Information Booklet and on the 24-Hour Roadside Assistance Card.

Voice Mail Calling

To learn how to access your voice mail, refer to "Working with Automated Systems."

Working With Automated Systems

This method is used in instances where one generally has to push numbers on the mobile phone keypad while navigating through an automated telephone system.

You can use your Uconnect Phone to access a voice mail system or an automated service, such as a paging service or automated customer service line. Some services require immediate response selection. In some instances, that may be too quick for use of the Uconnect Phone.

When calling a number with your Uconnect Phone that normally requires you to enter in a touch-tone sequence on your mobile phone keypad, you can utilize the touchscreen or push the Voice Command button and say the word "Send" then the sequence you wish to enter. For example, if required to enter your PIN followed with a pound, (3 7 4 6 #), you can push the Voice Command button and say, "Send 3 7 4 6 #." Saying "Send" followed by a number, or sequence of numbers, is also to be used for navigating through an automated customer service center menu structure, and to leave a number on a pager.

You can also send stored mobile phonebook entries as tones for fast and easy access to voice mail and pager entries. For example, if you previously created a Phonebook entry and/or Last Name as "Voice Password," then if you push the Voice Command button and say "Send Voicemail Password," the Uconnect Phone will then send the corresponding phone number associated with the phonebook entry, as tones over the phone.

NOTE:

- The first number encountered for that contact will be sent. All other numbers entered for that contact will be ignored.
- You may not hear all of the tones due to mobile phone network configurations. This is normal.
- Some paging and voice mail systems have system time out settings that are too short and may not allow the use of this feature.
- Pauses, wait or other characters that are supported by some phones are not supported over Bluetooth. These additional symbols will be ignored when dialing a numbered sequence.

Barge In — Overriding Prompts

The Voice Command button can be used when you wish to skip part of a prompt and issue your voice command immediately. For example, if a prompt is asking "There are two numbers with the name John. Say the full name" you could push the Voice Command button and say, "John Smith" to select that option without having to listen to the rest of the voice prompt.

Voice Response Length

It is possible for you to choose between Brief and Detailed Voice Response Length.

1. Push the MORE button on the faceplate, then press the "Settings" button on the touchscreen.
2. Press the "Display" button on the touchscreen, then scroll down to Voice Response Length.
3. Select either "Brief" or "Detailed" by pressing the box next to the selection. A check-mark will appear to indicate your selection.

Phone And Network Status Indicators

Uconnect Phone will provide notification to inform you of your phone and network status when you are attempting to make a phone call using Uconnect Phone. The status is given for network signal strength and phone battery strength.

Dialing Using The Mobile Phone Keypad

You can dial a phone number with your mobile phone keypad and still use the Uconnect Phone (while dialing via the mobile phone keypad, the user must exercise caution and take precautionary safety measures). By dialing a number with your connected Bluetooth mobile phone, the audio will be played through your vehicle's audio system. The Uconnect Phone will work the same as if you dial the number using a voice command.

NOTE: Certain brands of mobile phones do not send the dial ring to the Uconnect Phone to play it on the vehicle audio system, so you will not hear it. Under this situation, after successfully dialing a number the user may feel that the call did not go through even though the call is in progress. Once your call is answered, you will hear the audio.

Mute/Un-Mute (Mute OFF)

When you mute the Uconnect Phone, you will still be able to hear the conversation coming from the other party, but the other party will not be able to hear you. To mute the Uconnect Phone simply press the "Mute" button on the Phone main screen.

Advanced Phone Connectivity

Transfer Call To And From Mobile Phone

The Uconnect Phone allows ongoing calls to be transferred from your mobile phone to the Uconnect Phone without terminating the call. To transfer an ongoing call from your connected mobile phone to the Uconnect Phone or vice versa, press the "Transfer" button on the Phone main screen.

Connect Or Disconnect Link Between the Uconnect Phone And Mobile Phone

If you would like to connect or disconnect the Bluetooth connection between a Uconnect Phone paired mobile phone and the Uconnect Phone, follow the instructions described in your mobile phone User's Manual.

Things You Should Know About Your Uconnect Phone

Voice Command

For best performance:

- Adjust the rearview mirror to provide at least ½ inch (1 cm) gap between the overhead console (if equipped) and the mirror.
- Always wait for the beep before speaking.
- Speak normally without pausing, just as you would speak to a person sitting a few feet/meters away from you.
- Make sure that no one other than you is speaking during a Voice Command period.

Performance is maximized under:

- Low-to-medium blower setting
- Low-to-medium vehicle speed
- Low road noise
- Smooth road surface
- Fully closed windows
- Dry weather condition

NOTE:

- Even though the system is designed for users speaking in North American English, French, and Spanish accents, the system may not always work for some.
- When navigating through an automated system such as voice mail, or when sending a page, at the end of speaking the digit string, make sure to say “Send.”
- Storing names in the phonebook when the vehicle is not in motion is recommended.
- It is not recommended to store similar sounding names in the Uconnect Phonebook.
- Phonebook (Downloaded and Uconnect Phone Local) name recognition rate is optimized when the entries are not similar.
- Numbers must be spoken in single digits. “800” must be spoken “eight-zero-zero” not “eight hundred.”
- You can say “O” (letter “O”) for “0” (zero).
- Even though international dialing for most number combinations is supported, some shortcut dialing number combinations may not be supported.

Far End Audio Performance

Audio quality is maximized under:

- Low-to-medium blower setting
- Low-to-medium vehicle speed
- Low road noise
- Smooth road surface
- Fully closed windows
- Dry weather conditions
- Operation from the driver's seat
- Performance, such as audio clarity, echo, and loudness to a large degree rely on the phone and network, and not the Uconnect Phone
- Echo at the phone far end can sometimes be reduced by lowering the in-vehicle audio volume

Bluetooth Communication Link

Mobile phones have been found to lose connection to the Uconnect Phone. When this happens, the connection can generally be reestablished by switching the phone off/on. Your mobile phone is recommended to remain in Bluetooth ON mode.

Power-Up

After switching the ignition key from OFF to either the ON or ACC position, or after a language change, you must wait at least 15 seconds prior to using the system.

Voice Tree

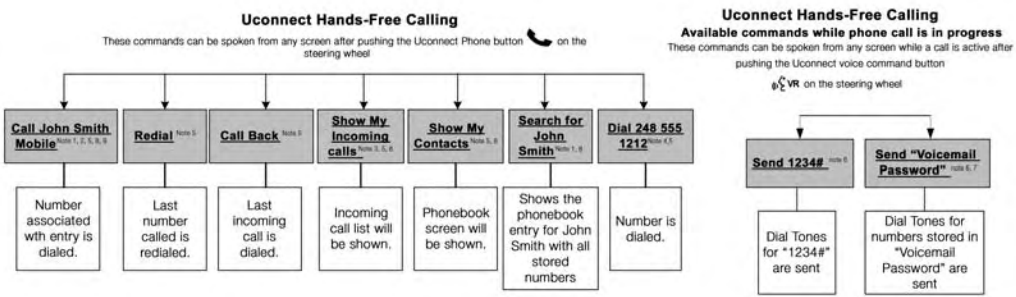

0305076052

NOTE:

- You can replace "John Smith" with any name in your mobile or favorite phone book. You can also say "Send a message to John Smith" and the system will ask you which phone number you want to send a message to for John Smith.
- You can replace "Mobile" with "Home," "Work" or "Other."
- You can replace "Incoming Calls" with "Outgoing Calls" or "Missed Calls."
- Messaging commands only work if the Uconnect system is equipped with this feature and the mobile phone supports messaging over Bluetooth.
- You can replace "248 555 1212" with any phone number supported by your Mobile phone.
- You can replace "4" with any message number shown on the screen.
- If your phone does not support phonebook download or call log download over Bluetooth than these commands will return a response that the contact does not exist in the phonebook.
- Available Voice Commands are shown in bold face and underlined in the gray shaded boxes.

General Information

The following regulatory statement applies to all Radio Frequency (RF) devices equipped in this vehicle:

This device complies with Part 15 of the FCC Rules and with Industry Canada license-exempt RSS standard(s). Operation is subject to the following two conditions:

1. This device may not cause harmful interference, and
2. This device must accept any interference received, including interference that may cause undesired operation.

Changes or modifications not expressly approved by the party responsible for compliance could void the user's authority to operate the equipment.

UCONNECT PHONE (UCONNECT 3/3 NAV)

Uconnect Phone is a voice-activated, hands-free, in-vehicle communications system. Uconnect Phone allows you to dial a phone number with your mobile phone.

Uconnect Phone supports the following features:

Voice Activated Features:

- Hands Free dialing via Voice (“Call John Smith Mobile” or, “Dial 248 555 1212”).
- Hands Free text to speech listening of your incoming SMS messages.
- Hands Free text messaging (“Send a message to John Smith Mobile”).
- Redialing last dialed numbers (“Redial”).
- Calling Back the last incoming call number (“Call Back”).
- View Call logs on screen (“Show incoming calls,” “Show Outgoing calls,” “Show missed Calls,” “Show Recent Calls”).
- Searching Contacts phone number (“Search for John Smith Mobile”).

Screen Activated Features

- Dialing via Keypad using touchscreen.
- Viewing and Calling contacts from Phonebooks displayed on the touchscreen.
- Setting Favorite Contact Phone numbers so they are easily accessible on the Main Phone screen.
- Viewing and Calling contacts from Recent Call logs.
- Reviewing your recent Incoming SMS.
- Sending a text message via the touchscreen.
- Listen to Music on your Bluetooth Device via the touchscreen.
- Pairing up to ten phones/audio devices for easy access to connect to them quickly.

NOTE: Your phone must be capable of SMS messaging via Bluetooth for messaging features to work properly. Your mobile phone's audio is transmitted through your vehicles audio system; the system will automatically mute your radio when using the Uconnect Phone. For Uconnect customer support, visit the following website:

- U.S. residents - visit UconnectPhone.com or call 1-877-855-8400.
- Canadian residents - visit UconnectPhone.com or call 1-800-465-2001 (English) or 1-800-387-9983 (French).

Uconnect Phone allows you to transfer calls between the system and your mobile phone as you enter or exit your vehicle and enables you to mute the system's microphone for private conversation.

WARNING!

Any voice commanded system should be used only in safe driving conditions following all applicable laws, including laws regarding phone use. Your attention should be focused on safely operating the vehicle. Failure to do so may result in an accident causing serious injury or death.

The Uconnect Phone is driven through your Bluetooth "Hands-Free Profile" mobile phone. Uconnect features Bluetooth technology - the global standard that enables different electronic devices to connect to each other without wires or a docking station, so Uconnect Phone works no matter where you stow your mobile phone (be it your purse, pocket, or briefcase), as long as your phone is turned on and has been paired to the vehicle's Uconnect Phone.

The Uconnect Phone allows up to ten mobile phones or audio devices to be linked to the system. Only one linked (or paired) mobile phone and one audio device can be used with the system at a time. The system is available in English, Spanish, or French languages.

Uconnect Phone Button

The Uconnect Phone button is used to enter the phone mode and make calls, show recent incoming and outgoing calls, view phonebook along with other features. When you push the button you will hear a BEEP. The beep is your signal to give a command.

Uconnect Voice Command Button

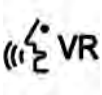

The Uconnect Voice Command button is only used for "barge in" and when you are already in a call and you want to send Tones or make another call.

The Voice Command button is also used to access the Voice Commands for the Uconnect Voice Command features if your vehicle is equipped. Please see the Uconnect Voice Command section for direction on how to use the Voice Command button.

The Uconnect Phone is fully integrated with the vehicles audio system. The volume of the Uconnect Phone can be adjusted either from the radio volume control knob or from the steering wheel radio control (right switch), if so equipped.

Operation

Voice commands can be used to operate the Uconnect Phone and to navigate through the Uconnect Phone menu structure. Voice commands are required after most Uconnect Phone prompts. There are two general methods for how Voice Command works:

1. Say compound commands like "Call John Smith mobile."
2. Say the individual commands and allow the system to guide you to complete the task.

You will be prompted for a specific command and then guided through the available options.

- Prior to giving a voice command, one must wait for the beep, which follows the "Listen" prompt or another prompt.
- For certain operations, compound commands can be used. For example, instead of saying "Call" and then "John Smith" and then "mobile", the following compound command can be said: "Call John Smith mobile."
- For each feature explanation in this section, only the compound command form of the voice command is given. You can also break the commands into parts and say each part of the command when you are asked for it. For example, you can use the compound command form voice command "Search for John Smith," or you can break the compound command form into two voice commands: "Search Contact" and when asked "John Smith." Please remember, the Uconnect Phone works best when you talk in a normal conversational tone, as if speaking to someone sitting a few feet/meters away from you.

Natural Speech

Your Uconnect Phone Voice system uses a Natural Language Voice Recognition (VR) engine.

Natural speech allows the user to speak commands in phrases or complete sentences. The system filters out certain non-word utterances and sounds such as “ah” and “eh.” The system handles fill-in words such as “I would like to.”

The system handles multiple inputs in the same phrase or sentence such as “make a phone call” and “to Kelly Smith.” For multiple inputs in the same phrase or sentence, the system identifies the topic or context and provides the associated follow-up prompt such as “Who do you want to call?” in the case where a phone call was requested but the specific name was not recognized.

The system utilizes continuous dialog; when the system requires more information from the user it will ask a question to which the user can respond without pushing the “Voice Command” button on your steering wheel.

Voice Command Tree

Refer to “Voice Tree” in this section.

Help Command

If you need assistance at any prompt, or if you want to know your options at any prompt, say “Help” following the beep.

To activate the Uconnect Phone from idle, simply push the Phone button on your steering wheel and say a command or say “help.” All Uconnect Phone sessions begin with a push of the Phone button on the radio control head.

Cancel Command

At any prompt, after the beep, you can say “Cancel” and you will be returned to the main menu.

You can also push the Phone or Voice Command button on your steering wheel when the system is listening for a command and be returned to the main or previous menu.

Pair (Link) Uconnect Phone To A Mobile Phone

To begin using your Uconnect Phone, you must pair your compatible Bluetooth enabled mobile phone.

NOTE:

- You must have Bluetooth enabled on your mobile phone to complete this procedure.
- The vehicle must be in PARK.

To complete the pairing process, you will need to reference your mobile phone Owner's Manual. The Uconnect website may also provide detailed instructions for pairing.

1. Press the "Phone" button on the touchscreen to begin.
2. If there is no phone currently connected with the system, a pop-up will appear.

Mobile Phone Pairing

3. Select "Yes" to begin the pairing process. Then, search for available devices on your Bluetooth enabled mobile phone. When prompted on the phone, enter the name and PIN shown on the Uconnect screen.
   - If "No" is selected, press the "Settings" button from the Uconnect Phone main screen.
   - Press the "Add Device" button on the touchscreen.

- Search for available devices on your Bluetooth enabled mobile phone. When prompted on the phone, enter the name and PIN shown on the Uconnect screen.
- See step four to complete the process.

4. Uconnect Phone will display an in progress screen while the system is connecting.

Mobile Phone Pairing Progress

5. When the pairing process has successfully completed, the system will prompt you to choose whether or not this is your favorite phone. Selecting "Yes" will make this phone the highest priority. This phone will take precedence over other paired phones within range.

Pair Additional Mobile Phones

1. Press the "Settings" button from the Phone main screen.
2. Press the "Add Device" button on the touchscreen.
3. Search for available devices on your Bluetooth enabled mobile phone. When prompted on the phone, enter the name and PIN shown on the Uconnect screen.
4. Uconnect Phone will display an in process screen while the system is connecting.
5. When the pairing process has successfully completed, the system will prompt you to choose whether or not this is your favorite phone. Selecting "Yes" will make this phone the highest priority. This phone will take precedence over other paired phones within range.

NOTE: For phones which are not made a favorite, the phone priority is determined by the order in which it was paired. The latest phone paired will have the higher priority.

You can also use the following VR commands to bring up the Paired Phone screen from any screen on the radio:

- "Show Paired Phones"
- "Connect My Phone"

Pair A Bluetooth Streaming Audio Device

1. Press the "Player" button on the touchscreen to begin.
2. Change the Source to Bluetooth.
3. Press the "Bluetooth" button on the touchscreen to display the Paired Audio Devices screen.
4. Press the "Add Device" button on the touchscreen.

NOTE: If there is no device currently connected with the system, a pop-up will appear.

5. Search for available devices on your Bluetooth enabled audio device. When prompted on the device, enter the PIN shown on the Uconnect screen.
6. Uconnect Phone will display an in process screen while the system is connecting.
7. When the pairing process has successfully completed, the system will prompt you to choose whether or not this is your favorite device. Selecting "Yes" will make this device the highest priority. This device will take precedence over other paired devices within range.

NOTE: For devices which are not made a favorite, the device priority is determined by the order in which it was paired. The latest device paired will have the higher priority.

You can also use the following VR command to bring up a list of paired audio devices:

- "Show Paired Phones"
- "Connect My Phone"

Connecting To A Particular Mobile Phone Or Audio Device After Pairing

Uconnect Phone will automatically connect to the highest priority paired phone and/or Audio Device within range. If you need to choose a particular phone or Audio Device follow these steps:

1. Press the "Settings" button on the touchscreen.
2. Press the "Paired Phones" or "Paired Audio Sources" button on the touchscreen.

3. Press to select the particular Phone or the particular Audio Device.
4. Press the "X" to exit out of the Settings screen.

Disconnecting A Phone Or Audio Device

1. Press the "Settings" button on the touchscreen.
2. Press the "Paired Phones" or "Paired Audio Devices" button on the touchscreen.
3. Press the settings icon button located to the right of the device name.
4. The options pop-up will be displayed.
5. Press the "Disconnect Device" button on the touchscreen.
6. Press the "X" to exit out of the Settings screen.

Deleting A Phone Or Audio Device

1. Press the "Settings" button on the touchscreen.
2. Press the "Pair Phones" or "Paired Audio Devices" button on the touchscreen.
3. Press the settings icon button located to the right of the device name for a different Phone or Audio Device than the currently connected device.
4. The options pop-up will be displayed.
5. Press the "Delete Device" button on the touchscreen.
6. Press the "X" to exit out of the Settings screen.

Making A Phone Or Audio Device A Favorite

1. Press the "Settings" button on the touchscreen.
2. Press the "Paired Phones" or "Paired Audio Devices" button on the touchscreen.
3. Press the settings icon button located to the right of the device name.
4. The options pop-up will be displayed.
5. Press the "Make Favorite" button on the touchscreen; you will see the chosen device move to the top of the list.
6. Press the "X" to exit out of the Settings screen.

Phonebook Download (Automatic Phonebook Transfer From Mobile Phone) — If Equipped

If equipped and specifically supported by your phone, Uconnect Phone automatically downloads names (text names) and number entries from the mobile phone's phonebook. Specific Bluetooth Phones with Phone Book Access Profile may support this feature. See Uconnect website, UconnectPhone.com, for supported phones.

- To call a name from a downloaded mobile phone book, follow the procedure in the Voice Recognition Quick Reference section.
- Automatic download and update of a phone book, if supported, begins as soon as the Bluetooth wireless phone connection is made to the Uconnect Phone, for example, after you start the vehicle.
- A maximum of 2,000 entries per phone will be downloaded and updated every time a phone is connected to the Uconnect Phone.
- Depending on the maximum number of entries downloaded, there may be a short delay before the latest downloaded names can be used. Until then, if available, the previously downloaded phonebook is available for use.
- Only the phonebook of the currently connected mobile phone is accessible.
- This downloaded phonebook cannot be edited or deleted on the Uconnect Phone. These can only be edited on the mobile phone. The changes are transferred and updated to Uconnect Phone on the next phone connection.

Managing Your Favorite Phonebook

There are three ways you can add an entry to your Favorite Phonebook.

1. During an active call of a number to make a favorite, press and hold a favorite button on the top of the phone main screen.

2. After loading the mobile phonebook, select Phonebook from the Phone main screen, then select the appropriate number. Press the "+" next to the selected number to display the options pop-up. In the pop-up select "Add to Favorites."

Phonebook Favorites

NOTE: If the Favorites list is full, you will be asked to remove an existing favorite.

3. From the Phone main screen, select Phonebook. From the Phonebook screen, select the "Favorites" button on the touchscreen and then select the "+" button on the touchscreen located to the right of the phonebook record. Select an empty entry and press the "+" on that selected entry. When the Options pop-up appears, press "Add from Mobile." You will then be asked which contact and number to choose from your mobile phonebook. When complete the new favorite will be shown.

Add From Mobile

To Remove A Favorite

1. To remove a Favorite, select phonebook from the Phone main screen.
2. Next select Favorites on the left side of the screen and then press the "+" Options button on the touchscreen.
3. Press the "+" next to the Favorite you would like to remove.

Remove From Favorites

4. The Options pop-up will display, press "Remove from Favs."

Emergency And Towing Assistance

The Emergency and Towing Assistance Favorite numbers can only be altered. These cannot be deleted and the names cannot be changed.

To change the Emergency or Towing Assistance numbers follow these steps.

1. Press the "Phonebook" button from the Phone main screen.
2. Press the "Favorites" button on the touchscreen. Scroll to the bottom of the list to locate the Emergency and Towing Assistance Favorites.
3. Press the "+" Options button on the touchscreen.
4. Press the "+" next to appropriate Favorite that is to be altered.

0456012195

Emergency And Breakdown Assistance

5. The Options pop-up will appear and you can choose between Editing the number or resetting the number to default.

Phone Call Features

The following features can be accessed through the Uconnect Phone if the feature(s) are available and supported by Bluetooth on your mobile service plan. For example, if your mobile service plan provides three-way calling, this feature can be accessed through the Uconnect Phone. Check with your mobile service provider for the features that you have.

Ways To Initiate A Phone Call

Listed below are all the ways you can initiate a phone call with Uconnect Phone.

- Redial
- Dial by pressing in the number
- Voice Commands (Dial by Saying a Name, Call by Saying a Phonebook Name, Redial or Call Back)
- Favorites
- Mobile Phonebook
- Recent Call Log
- SMS Message Viewer

Dial By Saying A Number

1. Push the Phone button to begin.
2. After the "Listening" prompt and the following beep, say "Dial 248-555-1212."
3. The Uconnect Phone will dial the number 248-555-1212.

Call By Saying A Phonebook Name

1. Push the "VR" button on your steering wheel to begin.
2. After the "Listening" prompt and the following beep, say "Call John Doe Mobile."
3. The Uconnect Phone will dial the number associated with John Doe, or if there are multiple numbers it will ask which number you want to call for John Doe.

Call Controls

The touchscreen allows you to control the following call features:

- Answer
- End
- Ignore
- Hold/unhold
- Mute/unmute
- Transfer the call to/from the phone
- Swap two active calls
- Join two active calls together

Touch-Tone Number Entry

1. Press the "Phone" button on the touchscreen.
2. Press the "Dial" button on the touchscreen.
3. The Touch-Tone screen will be displayed.
4. Use the numbered buttons on the touchscreens to enter the number and press "Call."

To send a touch-tone using Voice Recognition (VR), push the Voice Command button on your steering wheel while in a call and say "Send 1234#" or you can say "Send Voicemail Password" if Voicemail password is stored in your mobile phonebook.

Recent Calls

You may browse up to 34 of the most recent of each of the following call types:

Recent Calls

- Incoming Calls
- Outgoing Calls
- Missed Calls
- All Calls

These can be accessed by pressing the "recent calls" button on the touchscreen on the Phone main screen.

You can also push the Phone button and say "Show my incoming calls" from any screen and the Incoming calls will be displayed.

You can also push the Phone button and say "Show my recent calls" from any screen and the All calls screen will be displayed.

NOTE: Incoming can also be replaced with "Outgoing," "Recent" or "Missed."

Answer Or Ignore An Incoming Call — No Call Currently In Progress

When you receive a call on your mobile phone, the Uconnect Phone will interrupt the vehicle audio system. Push the Phone button on the steering wheel to accept the call. You can also press the "answer" button on the touchscreen or press the caller ID box.

Answer Or Ignore An Incoming Call — Call Currently In Progress

If a call is currently in progress and you have another incoming call, you will hear the same network tones for call waiting that you normally hear when using your mobile phone. Push the Phone button on the steering wheel, or press the "answer" button on the touchscreen, or caller ID box, to place the current call on hold and answer the incoming call.

NOTE: The Uconnect Phone compatible phones in the market today do not support rejecting an incoming call when another call is in progress. Therefore, the user can only answer an incoming call or ignore it.

Making A Second Call While Current Call Is In Progress

You can place a call on hold by pressing the "Hold" button on the Phone main screen, then dial a number from the dialpad, recent calls, SMS Inbox or from the phonebooks. To go back to the first call, refer to "Toggling Between Calls" in this section. To combine two calls, refer to "Join Calls" in this section.

Place/Retrieve A Call From Hold

During an active call, press the "Hold" button on the Phone main screen.

Toggling Between Calls

If two calls are in progress (one active and one on hold), press the "Swap" button on the Phone main screen. Only one call can be placed on hold at a time.

You can also push the Phone button to toggle between the active and held phone call.

Join Calls

When two calls are in progress (one active and one on hold), press the "Join Calls" button on the Phone main screen to combine all calls into a Conference Call.

Call Termination

To end a call in progress, momentarily push the Phone button or press the "end" button on the touchscreen. Only the active call(s) will be terminated and if there is a call on hold, it will become the new active call.

Redial

Press the "Redial" button on the touchscreen, or push the "VR" button and after the "Listening" prompt and the following beep, say "Redial."

The Uconnect Phone will call the last number that was dialed from your mobile phone.

Call Continuation

Call continuation is the progression of a phone call on the Uconnect Phone after the vehicle ignition has been switched to OFF.

NOTE: The call will remain within the vehicle audio system until the phone becomes out of range for the Bluetooth connection. It is recommended to press the "transfer" button on the touchscreen when leaving the vehicle.

Uconnect Phone Features

Emergency Assistance

If you are in an emergency and the mobile phone is reachable:

- Pick up the phone and manually dial the emergency number for your area.

If the phone is not reachable and the Uconnect Phone is operational, you may reach the emergency number as follows:

1. Push the Phone button to begin.
2. After the "Listening" prompt and the following beep, say "Dial Emergency" and the Uconnect Phone will instruct the paired mobile phone to call the emergency number. This feature is supported in the U.S., Canada, and Mexico.

NOTE:

- The Emergency call may also be initiated by using the touchscreen.
- The emergency number dialed is based on the country where the vehicle is purchased (911 for the U.S. and Canada and 060 for Mexico). The number dialed may not be applicable with the available mobile service and area.
- The Uconnect Phone does slightly lower your chances of successfully making a phone call as to that for the mobile phone directly.

WARNING!

Your phone must be turned on and connected to the Uconnect Phone to allow use of this vehicle feature in emergency situations, when the mobile phone has network coverage and stays connected to the Uconnect Phone.

Roadside Assistance/Towing Assistance

If you need roadside/towing assistance:

1. Push the Phone button to begin.
2. After the "Listening" prompt and the following beep, say "Roadside Assistance" or say "Towing Assistance."

NOTE: The roadside/towing assistance number dialed is based on the country where the vehicle is purchased (1-800-521-2779 for the U.S., 1-800-363-4869 for Canada, 55-14-3454 for Mexico City, and 1-800-712-3040 for outside Mexico City in Mexico). Please refer to the FCA US LLC 24-Hour "Roadside Assistance" coverage details in the Warranty Information Booklet.

Voice Mail Calling

To learn how to access your voice mail, refer to "Working with Automated Systems."

Working With Automated Systems

This method is used in instances where one generally has to push numbers on the mobile phone keypad while navigating through an automated telephone system.

You can use your Uconnect Phone to access a voice mail system or an automated service, such as a paging service or automated customer service line. Some services require immediate response selection. In some instances, that may be too quick for use of the Uconnect Phone.

When calling a number with your Uconnect Phone that normally requires you to enter in a touch-tone sequence on your mobile phone keypad, you can utilize the touchscreen or push the Voice Command button and say the word "Send" then the sequence you wish to enter. For example, if required to enter your PIN followed with a pound, (3 7 4 6 #), you can push the Voice Command button and say, "Send 3 7 4 6 #." Saying "Send" followed by a number, or sequence of numbers, is also to be used for navigating through an automated customer service center menu structure, and to leave a number on a pager.

You can also send stored mobile phonebook entries as tones for fast and easy access to voice mail and pager entries. For example, if you previously created a Phonebook entry with First and/or Last Name as "Voicemail Password", then if you push the Voice Command button and say "Send Voicemail Password" the Uconnect Phone will then send the corresponding phone number associated with the phonebook entry, as tones over the phone.

NOTE:

- The first number encountered for that contact will be sent. All other numbers entered for that contact will be ignored.
- You may not hear all of the tones due to mobile phone network configurations. This is normal.
- Some paging and voice mail systems have system time out settings that are too short and may not allow the use of this feature.
- Pauses, wait or other characters that are supported by some phones are not supported over Bluetooth. These additional symbols will be ignored in the dialing a numbered sequence.

Barge In — Overriding Prompts

The Voice Command button can be used when you wish to skip part of a prompt and issue your voice command immediately. For example, if a prompt is asking "There are two numbers with the name John. Say the full name" you could push the Voice Command button and say, "John Smith" to select that option without having to listen to the rest of the voice prompt.

Voice Response Length

It is possible for you to choose between Brief and Detailed Voice Response Length.

1. Press the "Settings" button on the touchscreen.
2. Press the "Voice" button on the touchscreen, then scroll down to Voice Response Length.
3. Select either "Brief" or "Detailed" by pressing the box next to the selection. A check-mark will appear to indicate your selection.

Phone And Network Status Indicators

Uconnect Phone will provide notification to inform you of your phone and network status when you are attempting to make a phone call using Uconnect Phone. The status is given for network signal strength and phone battery strength.

Dialing Using The Mobile Phone Keypad

You can dial a phone number with your mobile phone keypad and still use the Uconnect Phone (while dialing via the mobile phone keypad, the user must exercise caution and take precautionary safety measures). By dialing a number with your connected Bluetooth mobile phone, the audio will be played through your vehicle's audio system. The Uconnect Phone will work the same as if you dial the number using a voice command.

NOTE: Certain brands of mobile phones do not send the dial ring to the Uconnect Phone to play it on the vehicle audio system, so you will not hear it. Under this situation, after successfully dialing a number the user may feel that the call did not go through even though the call is in progress. Once your call is answered, you will hear the audio.

Mute/Un-Mute (Mute ON/OFF)

When you mute the Uconnect Phone, you will still be able to hear the conversation coming from the other party, but the other party will not be able to hear you. To mute the Uconnect Phone simply press the "Mute" button on the Phone main screen.

Advanced Phone Connectivity

Transfer Call To And From Mobile Phone

The Uconnect Phone allows ongoing calls to be transferred from your mobile phone to the Uconnect Phone without terminating the call. To transfer an ongoing call from your connected mobile phone to the Uconnect Phone or vice versa, press the "Transfer" button on the Phone main screen.

Connect Or Disconnect Link Between The Uconnect Phone And Mobile Phone

If you would like to connect or disconnect the Bluetooth connection between a Uconnect Phone paired mobile phone and the Uconnect Phone, follow the instructions described in your mobile phone User's Manual.

Things You Should Know About Your Uconnect Phone

Voice Command

For the best performance:

- Adjust the rearview mirror to provide at least ½ inch (1 cm) gap between the overhead console (if equipped) and the mirror.
- Always wait for the beep before speaking.
- Speak normally, without pausing, just as you would speak to a person sitting a few feet/meters away from you.
- Ensure that no one other than you is speaking during a voice command period.

Performance is maximized under:

- Low-To-Medium Blower Setting
- Low-To-Medium Vehicle Speed
- Low Road Noise
- Smooth Road Surface
- Fully Closed Windows
- Dry Weather Condition

WARNING!

ALWAYS drive safely with your hands on the wheel. You have full responsibility and assume all risks related to the use of the Uconnect features and applications in this vehicle. Only use Uconnect when it is safe to do so. Failure to do so may result in an accident involving serious injury or death.

Even though the system is designed for many languages and accents, the system may not always work for some.

NOTE: It is recommended that you do not store names in your favorites phonebook while the vehicle is in motion.

Phonebook (Mobile and Favorites) name recognition rate is optimized when the entries are not similar. You can say “O” (letter “O”) for “0” (zero).

Even though international dialing for most number combinations is supported, some shortcut dialing number combinations may not be supported.

Far End Audio Performance

Audio quality is maximized under:

- Low-To-Medium Blower Setting
- Low-To-Medium Vehicle Speed
- Low Road Noise
- Smooth Road Surface
- Fully Closed Windows
- Dry Weather Conditions
- Operation From The Driver's Seat

Performance such as audio clarity, echo, and loudness to a large degree rely on the phone and network, and not the Uconnect Phone.

Echo at the far end can sometimes be reduced by lowering the in-vehicle audio volume.

In a convertible vehicle, system performance may be compromised with the convertible top down.

Voice Text Reply

Uconnect Phone can read or send new messages on your phone.

Your phone must support SMS over Bluetooth to use this feature. If the Uconnect Phone determines your phone is not compatible with SMS messaging over Bluetooth the "Messaging" button will be grayed out and the feature will not be available for use.

Voice Text List

NOTE: Uconnect Phone SMS is only available when the vehicle is not moving.

Read Messages:

If you receive a new text message while your phone is connected to Uconnect Phone, an announcement will be made to notify you that you have a new text message.

Voice Text Reply

Once a message is received and viewed or listened to, you will have the following options:

- Send a Reply
- Forward
- Call

Send Messages Using Buttons On The Touchscreen:

You can send messages using Uconnect Phone. To send a new message:

1. Press the "Phone" button on the touchscreen.
2. Press the "messaging" button on the touchscreen then "New Message."
3. Press one of the 18 preset messages and the person you wish to send the message to.

Preset Message List

4. If multiple numbers are available for the contact select which number you would like to have the message sent.
5. Press “Send” or “Cancel.”

Send Messages Using Voice Commands:

1. Push the Phone button.
2. After the “Listening” prompt and the following beep, say “Send message to John Smith mobile.”
3. After the system prompts you for what message you want to send, say the message you wish to send or say “List.” There are 18 preset messages.

While the list of defined messages are being read, you can interrupt the system by pushing the Voice Command button and saying the message you want to send.

After the system confirms that you want to send your message to John Smith, your message will be sent.

Preset Message List

List of Preset Messages:

1. Yes.
2. No.
3. Okay.
4. I can't talk right now.
5. Call me.
6. I'll call you later.
7. I'm on my way.
8. Thanks.
9. I'll be late.
10. I will be <number> minutes late.
11. See you in <number> minutes.
12. Stuck in traffic.
13. Start without me.
14. Where are you?
15. Are you there yet?
16. I need directions.
17. I'm lost.
18. See you later.

Bluetooth Communication Link

Mobile phones have been found to lose connection to the Uconnect Phone. When this happens, the connection can generally be re-established by switching the mobile phone OFF/ON. Your mobile phone is recommended to remain in Bluetooth ON mode.

Power-Up

After switching the ignition key from OFF to either the ON or ACC position, or after a language change, you must wait at least 15 seconds prior to using the system.

Voice Tree

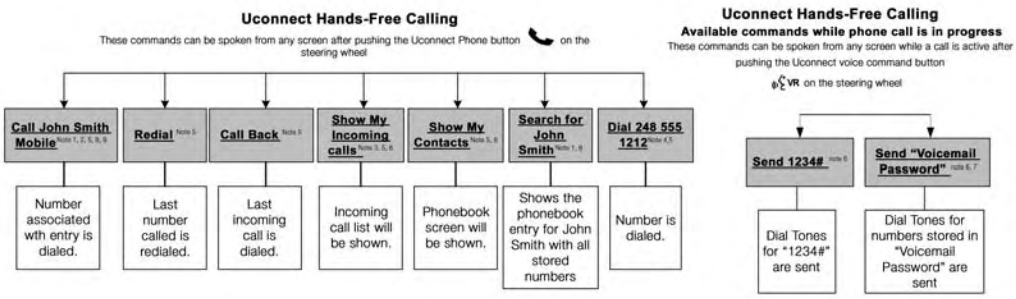

0305076102

NOTE:

1. You can replace “John Smith” with any name in your mobile or favorite phone book. You can also say “Send a message to John Smith,” and the system will ask you which phone number you want to send a message to for John Smith.
2. You can replace “Mobile” with “Home,” “Work” or “Other.”
3. You can replace “Incoming Calls” with “Outgoing Calls” or “Missed Calls.”
4. You can replace “248 555 1212” with any phone number supported by your Mobile phone.
5. These commands can be used during a phone call after pushing the Uconnect Voice Command button on the steering wheel. Please note the call will be muted while the VR session is active.
6. Send dial tones for automated systems is available while a call is active. This is an example that uses a Phonebook Record named “Voicemail Password.”
7. Storing Dial tones in contact names is possible but only the first number encountered in a contact name will be sent. For example, if there is a number stored in the Home and Work numbers for the contact “Voicemail password,” only the Home number will be sent.
8. If your phone does not support phonebook download or call log download over Bluetooth, then these commands will return a response that the contact does not exist in the phonebook.
9. Emergency and Towing assistance are contacts that have been pre-loaded in the phonebook. Commands such as “Call Emergency” and “Call Towing Assistance” will call the corresponding number stored with those contacts.

NOTE: Available Voice Commands are shown in bold face and underlined in the gray shaded boxes.

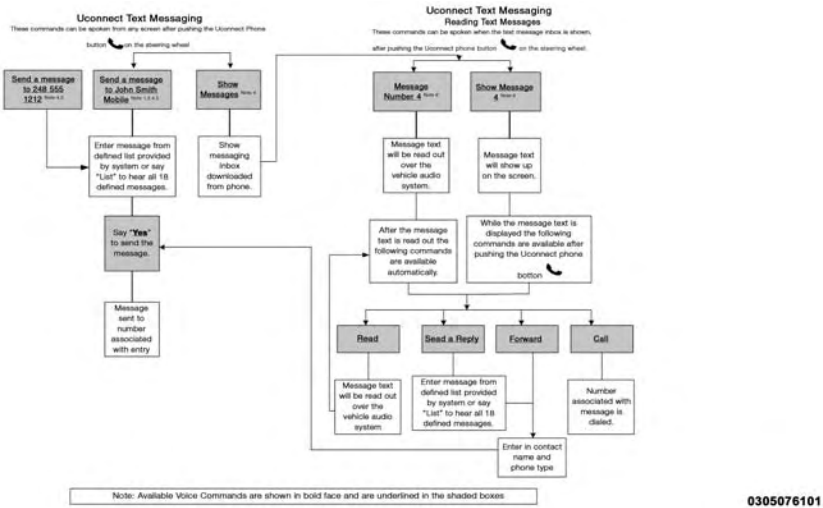

NOTE:

1. You can replace “John Smith” with any name in your mobile or favorite phone book. You can also say “Send a message to John Smith” and the system will ask you which phone number you want to send a message to for John Smith.
2. You can replace “Mobile” with “Home,” “Work” or “Other.”
3. You can replace “Incoming Calls” with “Outgoing Calls” or “Missed Calls.”
4. Messaging commands only work if the Uconnect system is equipped with this feature and the mobile phone supports messaging over Bluetooth.

5. You can replace “248 555 1212” with any phone number supported by your Mobile phone.
6. You can replace “4” with any message number shown on the screen.
7. If your phone does not support phonebook download or call log download over Bluetooth then these commands will return a response that the contact does not exist in the phonebook.

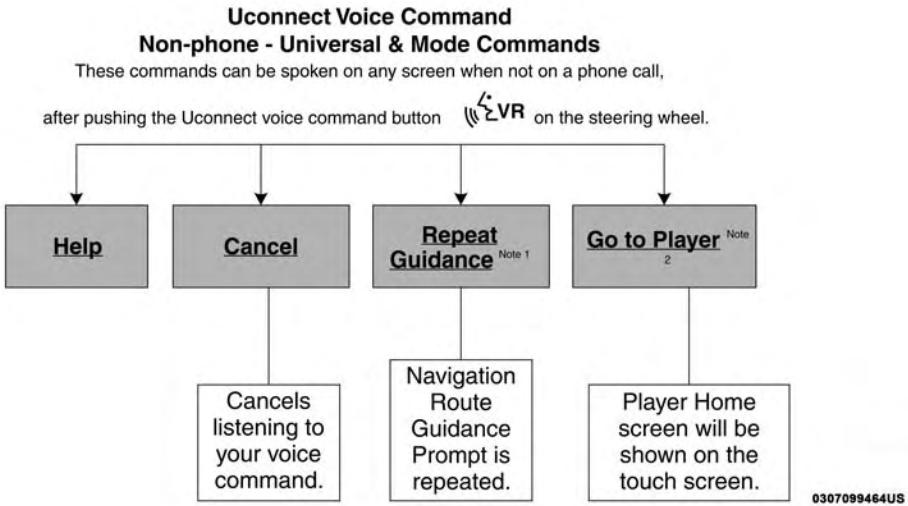

NOTE: Available Voice Commands are shown in bold face and underlined in the gray shaded boxes.

General Information

The following regulatory statement applies to all Radio Frequency (RF) devices equipped in this vehicle:

This device complies with Part 15 of the FCC Rules and with Industry Canada license-exempt RSS standard(s). Operation is subject to the following two conditions:

1. This device may not cause harmful interference, and
2. This device must accept any interference received, including interference that may cause undesired operation.

Changes or modifications not expressly approved by the party responsible for compliance could void the user's authority to operate the equipment.

RADIO OPERATION AND MOBILE PHONES

Under certain conditions, the mobile phone being on in your vehicle can cause erratic or noisy performance from your radio. This condition may be lessened or eliminated by relocating the mobile phone antenna. This condition is not harmful to the radio. If your radio performance does not satisfactorily "clear" by the repositioning of the antenna, it is recommended that the radio volume be turned down or off during mobile phone operation when not using Uconnect (if equipped).

Regulatory And Safety Information

USA/CANADA

Exposure to Radio Frequency Radiation

The radiated output power of the internal wireless radio is far below the FCC and IC radio frequency exposure limits. Nevertheless, the wireless radio will be used in such a manner that the radio is 20 cm or further from the human body.

The internal wireless radio operates within guidelines found in radio frequency safety standards and recommendations, which reflect the consensus of the scientific community.

The radio manufacturer believes the internal wireless radio is safe for use by consumers. The level of energy emitted is far less than the electromagnetic energy emitted by wireless devices such as mobile phones. However, the use of wireless radios may be restricted in some situations or

environments, such as aboard airplanes. If you are unsure of restrictions, you are encouraged to ask for authorization before turning on the wireless radio.

The following regulatory statement applies to all Radio Frequency (RF) devices equipped in this vehicle:

This device complies with Part 15 of the FCC Rules and with Industry Canada license-exempt RSS standard(s). Operation is subject to the following two conditions:

1. This device may not cause harmful interference, and
2. This device must accept any interference received, including interference that may cause undesired operation.

NOTE: Changes or modifications not expressly approved by the party responsible for compliance could void the user's authority to operate the equipment.

NOTE:

- This equipment has been tested and found to comply with the limits for a Class B digital device, pursuant to Part 15 of the FCC Rules. These limits are designed to provide reasonable protection against harmful interference in a residential installation. This equipment generates, uses and can radiate radio frequency energy and, if not installed and used in accordance with the instructions, may cause harmful interference to radio communications. However, there is no guarantee that interference will not occur in a particular installation.
- If this equipment does cause harmful interference to radio or television reception, which can be determined by turning the equipment off and on, the user is encouraged to try to correct the interference by one or more of the following measures:
  1. Increase the separation between the equipment and receiver.
  2. Consult an authorized dealer or an experienced radio technician for help.

VOICE COMMAND (UCONNECT 3/3 NAV)

Uconnect 3/3 NAV

The Uconnect Voice Command system allows you to control your AM, FM radio, satellite radio, disc player, SD Card, USB/iPod and SiriusXM Travel Link.

The Uconnect Voice Command system allows you to control your AM, FM radio, satellite radio, disc player, SD Card, USB/iPod.

NOTE: Take care to speak into the Voice Command system as calmly and normally as possible. The ability of the Voice Command system to recognize user voice commands may be negatively affected by rapid speaking or a raised voice level.

WARNING!

Any voice commanded system should be used only in safe driving conditions following all applicable laws, including laws regarding phone use. Your attention should be focused on safely operating the vehicle. Failure to do so may result in a collision causing serious injury or death.

When you push the Uconnect Voice Command button, you will hear a beep. The beep is your signal to give a command.

If no command is spoken the system will say one of two responses:

- I didn't understand
- I didn't get that, etc.

If a command is not spoken a second time, the system will respond with an error and give some direction as what can be said based on the context you are in. After three consecutive failures of a spoken command the VR session will end.

Pushing the Uconnect Voice Command button while the system is speaking is known as "barging in." The system will be interrupted, and after the beep, you can say a command. This will become helpful once you start to learn the options.

NOTE: At any time, you can say the words "Cancel" or "Help."

These commands are universal and can be used from any menu. All other commands can be used depending upon the active application.

When using this system, you should speak clearly and at a normal speaking volume.

The system will best recognize your speech if the windows are closed, and the heater/air conditioning fan is set to low.

At any point, if the system does not recognize one of your commands, you will be prompted to repeat it.

To hear available commands, push the Uconnect Voice Command button and say "Help." You will hear available commands for the screen displayed.

Natural Speech

Natural speech allows the user to speak commands in phrases or complete sentences. The system filters out certain non-word utterances and sounds such as "ah" and "eh." The system handles fill-in words such as "I would like to."

The system handles multiple inputs in the same phrase or sentence such as "make a phone call" and "to Kelly Smith." For multiple inputs in the same phrase or sentence, the system identifies the topic or context and provides the associated follow-up prompt such as "Who do you want to call?" in the case where a phone call was requested but the specific name was not recognized.

The system utilizes continuous dialog; when the system requires more information from the user it will ask a question to which the user can respond without pressing the Uconnect Voice Command button.

Uconnect Voice Commands

The Uconnect Voice Command system understands two types of commands. Universal commands are available at all times. Local commands are available if the supported radio mode is active.

Start a dialogue by pushing the Uconnect Voice Command button.

Changing The Volume

1. Start a dialogue by pushing the Voice Command button.
2. Say a command (e.g., "Help").
3. Use the ON/OFF VOLUME rotary knob to adjust the volume to a comfortable level while the Voice Command system is speaking. Please note the volume setting for Voice Command is different than the audio system.

Starting Voice Recognition (VR) Session In Radio/Player Modes

In this mode, you can say the following commands:

NOTE: The commands can be said on any screen when a call is not active after pushing the Uconnect Voice Command button.

Source

To switch to the audio source, say "Change source to Disc" for example. This command can be given in any mode or screen:

- "Track" (#) (to change the track)

Voice Tree

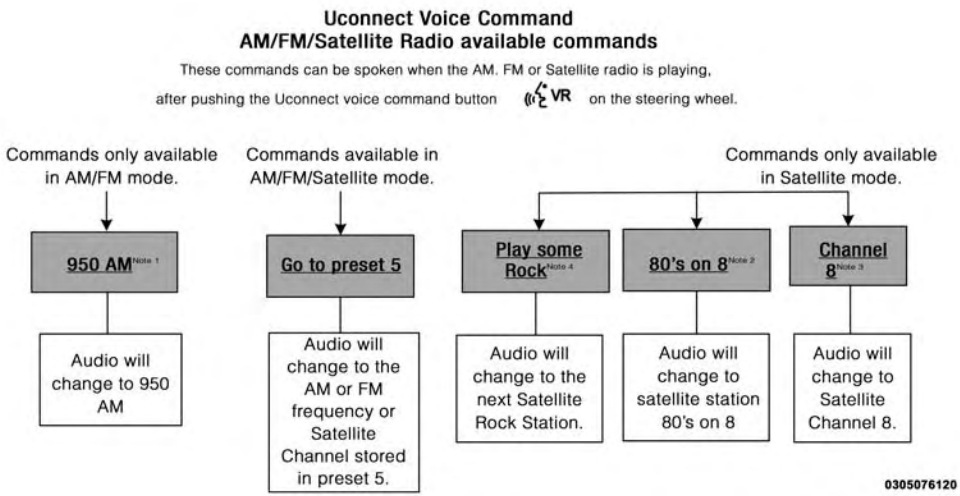
Uconnect Voice Command
AM/FM/Satellite Radio available commands
These commands can be spoken when the AM. FM or Satellite radio is playing,
after pushing the Uconnect voice command button VR on the steering wheel.
Commands only available in AM/FM mode.
Commands available in AM/FM/Satellite mode.
Commands only available in Satellite mode.
950 AM Note 1
Go to preset 5
Play some Rock Note 4
80's on 8 Note 2
Channel 8 Note 3
Audio will change to 950 AM
Audio will change to the AM or FM frequency or Satellite Channel stored in preset 5.
Audio will change to the next Satellite Rock Station.
Audio will change to satellite station 80's on 8
Audio will change to Satellite Channel 8.
0305076120

NOTE:

- You can replace “950 AM” with any other AM or FM frequency, such as “98.7 FM.”
- You can replace “80’s on 8” with any other satellite station name received by the radio.
- You can replace “8” with any other satellite channel number received by the radio.
- You can replace “rock” with any of the satellite music types.
- Available Voice Commands are shown in bold face and shaded grey.

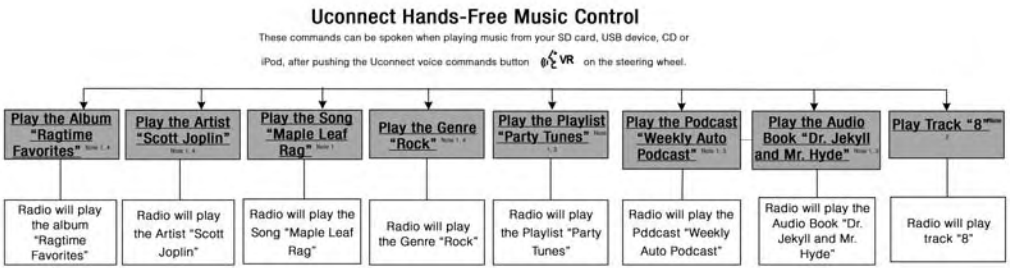

NOTE:

- You can replace the album, artist, song, genre, playlist, podcast and audio book names with any corresponding names on the current device that is playing.
- You can replace “8” with any track on the CD that is currently playing. Command is only available when CD is playing.
- Playlist, Podcast and audio book commands are only available when the iPod is connected and playing.
- VR commands, Albums, Artists, and Genre names are based on the music metadata contained on the loaded/connected device.
- Available Voice Commands are shown in bold face and shaded grey.

Uconnect Voice Command
Travel Link commands

These commands can be said on any screen when a call is not active after pushing the Uconnect voice command button VR on the steering wheel.

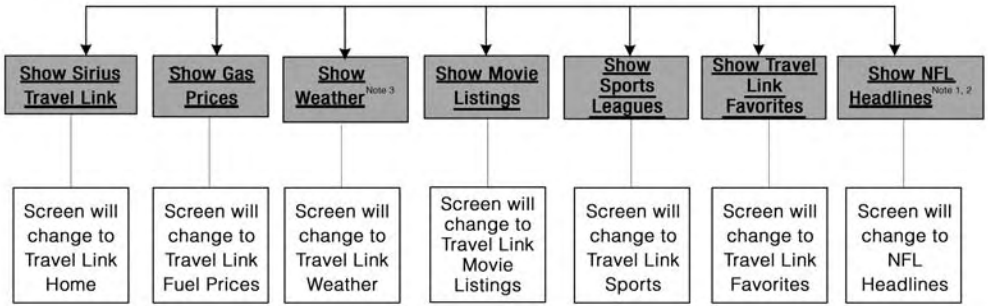

0305076124

NOTE:

- You can replace “NFL” with any league shown on the sports league screen. For example you can say “Show MLB headlines” or “Show PGA headlines.”
- You can replace “Headlines” with any menu items shown on a league screen. For example you can say “Show NFL Schedule and results” or “Show NCAA Basketball AP top 25” or “Show Major League Baseball Teams.”
- You can also say “Show Current Weather” or “Show extended weather” or “Show five day forecast” or “Show ski info” to get other forecasts.
- Available Voice Commands are shown in bold face and shaded grey.

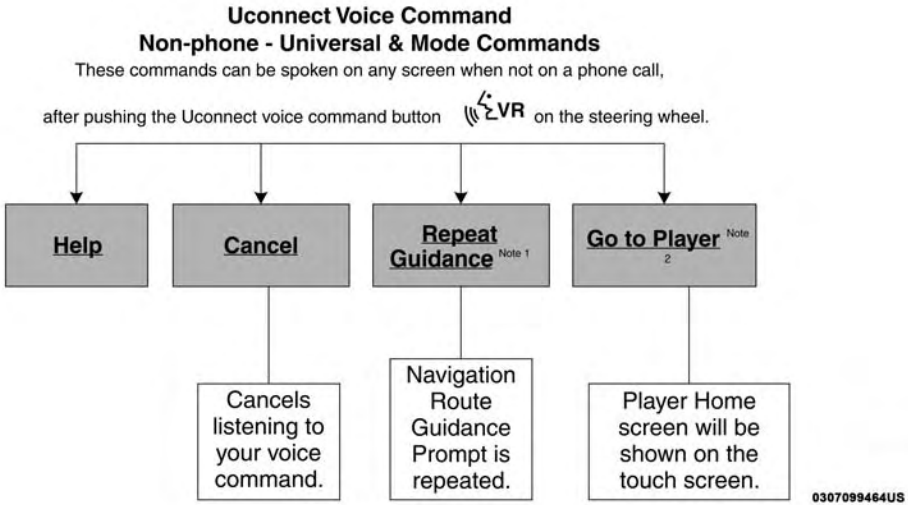

NOTE:

- Only available with Navigation equipped vehicles.
- You can replace “Player” with “Radio,” “Navigation,” “Phone,” “Climate,” “More” or “Settings.”
- Navigation commands only work if equipped with Navigation.
- Available Voice Commands are shown in bold face and shaded grey.

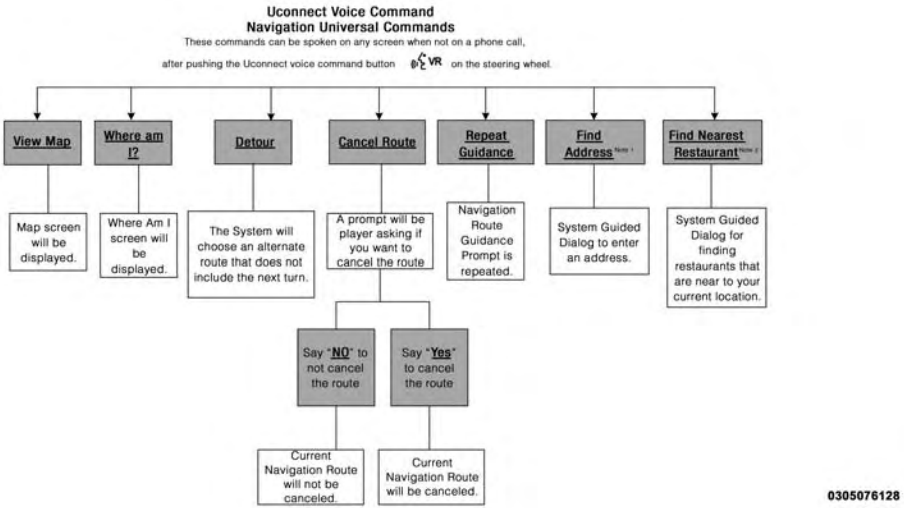
Uconnect Voice Command
Navigation Universal Commands
These commands can be spoken on any screen when not on a phone call,
after pushing the Uconnect voice command button VR on the steering wheel.
View Map
Where am I?
Detour
Cancel Route
Repeat Guidance
Find Address
Find Nearest Restaurant
Map screen will be displayed.
Where Am I screen will be displayed.
The System will choose an alternate route that does not include the next turn.
A prompt will be player asking if you want to cancel the route
Navigation Route Guidance Prompt is repeated.
System Guided Dialog to enter an address.
System Guided Dialog for finding restaurants that are near to your current location.
Say "NO" to not cancel the route
Say "Yes" to cancel the route
Current Navigation Route will not be canceled.
Current Navigation Route will be canceled.
0305076128

NOTE:

- You can also say “Find City,” “Find Favorite,” “Find Play by Category,” “Find Play by Name,” “Find Recently Found,” “Where to?” or “Go Home.”
- You can say “Find Nearest” then “Restaurant,” “Fuel,” “Transit,” “Lodging,” “Shopping,” “Bank,” “Entertainment,” “Recreation,” “Attractions,” “Community,” “Auto Services,” “Hospitals,” “Parking,” “Airport,” “Police Stations,” “Fire Stations,” or “Auto Dealers.”
- Available Voice Commands are shown in bold face and shaded grey.

CD/DVD DISC MAINTENANCE

To keep a CD/DVD in good condition, take the following precautions:

1. Handle the disc by its edge; avoid touching the surface.
2. If the disc is stained, clean the surface with a soft cloth, wiping from center to edge.
3. Do not apply paper or tape to the disc; avoid scratching the disc.
4. Do not use solvents such as benzene, thinner, cleaners, or anti-static sprays.
5. Store the disc in its case after playing.
6. Do not expose the disc to direct sunlight.
7. Do not store the disc where temperatures may become too high.

NOTE: If you experience difficulty in playing a particular disc, it may be damaged, (e.g., scratched, reflective coating removed, a hair, moisture or dew on the disc) oversized, or have protection encoding. Try a known good disc before considering disc player service.

CUSTOMER ASSISTANCE

CONTENTS

- SUGGESTIONS FOR OBTAINING SERVICE FOR YOUR VEHICLE 494
  - Prepare For The Appointment 494
  - Prepare A List 494
  - Be Reasonable With Requests 494
- IF YOU NEED ASSISTANCE 494
  - FCA US LLC Customer Center 495
  - FCA Canada Inc. Customer Center. 495
  - In Mexico Contact 495
  - Puerto Rico And U.S. Virgin Islands. 495
  - Customer Assistance For The Hearing Or Speech Impaired (TDD/TTY) 495
  - Service Contract 496
- WARRANTY INFORMATION 497
- MOPAR PARTS 497
- REPORTING SAFETY DEFECTS 497
  - In The 50 United States And Washington, D.C. . .497
  - In Canada 497
- PUBLICATION ORDER FORMS 498

SUGGESTIONS FOR OBTAINING SERVICE FOR YOUR VEHICLE

Prepare For The Appointment

If you are having warranty work done, be sure to have the right papers with you. Take your warranty folder. All work to be performed may not be covered by the warranty. Discuss additional charges with the service manager. Keep a maintenance log of your vehicle's service history. This can often provide a clue to the current problem.

Prepare A List

Make a written list of your vehicle's problems or the specific work you want done. If you've had an accident or work done that is not on your maintenance log, let the service advisor know.

Be Reasonable With Requests

If you list a number of items and you must have your vehicle by the end of the day, discuss the situation with the service advisor and list the items in order of priority. At many authorized dealers, you may obtain a rental vehicle at a minimal daily charge. If you need a rental, it is advisable to make these arrangements when you call for an appointment.

IF YOU NEED ASSISTANCE

The manufacturer and its authorized dealer are vitally interested in your satisfaction. We want you to be happy with our products and services.

Warranty service must be done by an authorized dealer. We strongly recommend that you take the vehicle to an authorized dealer. They know your vehicle the best, and are most concerned that you get prompt and high quality service. The manufacturer's authorized dealer have the facilities, factory-trained technicians, special tools, and the latest information to ensure the vehicle is fixed correctly and in a timely manner.

This is why you should always talk to an authorized dealer service manager first. Most matters can be resolved with this process.

- If for some reason you are still not satisfied, talk to the general manager or owner of the authorized dealer. They want to know if you need assistance.
- If an authorized dealer is unable to resolve the concern, you may contact the manufacturer's customer center.

Any communication to the manufacturer's customer center should include the following information:

- Owner's name and address
- Owner's telephone number (home and office)
- Authorized dealer name
- Vehicle Identification Number (VIN)
- Vehicle delivery date and mileage

FCA US LLC Customer Center

P.O. Box 21–8004

Auburn Hills, MI 48321–8004

Phone: (800) 423-6343

FCA Canada Inc. Customer Center

P.O. Box 1621

Windsor, Ontario N9A 4H6

Phone: (800) 465-2001 English / (800) 387-9983 French

In Mexico Contact

Av. Prolongacion Paseo de la Reforma, 1240

Sante Fe C.P. 05109

Mexico, D. F.

In Mexico City: 5081-7568

Outside Mexico City: 1-800-505-1300

Puerto Rico And U.S. Virgin Islands

Customer Service Chrysler International Services LLC

P.O. Box 191857

San Juan 00919-1857

Tel.: (888) 242-6342

Fax: (787) 782-3345

Customer Assistance For The Hearing Or Speech Impaired (TDD/TTY)

To assist customers who have hearing difficulties, the manufacturer has installed special TDD (Telecommunication Devices for the Deaf) equipment at its customer center. Any hearing or speech impaired customer, who has access to a TDD or a conventional teletypewriter (TTY) in the United States, can communicate with the manufacturer by dialing 1-800-380-CHRY.

Canadian residents with hearing difficulties that require assistance can use the special needs relay service offered by Bell Canada. For TTY teletypewriter users, dial 711 and for Voice callers, dial 1-800-855-0511 to connect with a Bell Relay Service operator.

Service Contract

You may have purchased a service contract for a vehicle to help protect you from the high cost of unexpected repairs after the manufacturer's New Vehicle Limited Warranty expires. The manufacturer stands behind only the manufacturer's service contracts. If you purchased a manufacturer's service contract, you will receive Plan Provisions and an Owner Identification Card in the mail within three weeks of the vehicle delivery date. If you have any questions about the service contract, call the manufacturer's Service Contract National Customer Hotline at 1-800-521-9922 (Canadian residents, call (800) 465-2001 English / (800) 387-9983 French).

The manufacturer will not stand behind any service contract that is not the manufacturer's service contract. It is not responsible for any service contract other than the manufacturer's service contract. If you purchased a service contract that is not a manufacturer's service contract, and you require service after the manufacturer's New Vehicle Limited Warranty expires, please refer to the contract documents, and contact the person listed in those documents.

We appreciate that you have made a major investment when you purchased the vehicle. An authorized dealer has also made a major investment in facilities, tools, and training to assure that you are absolutely delighted with the ownership experience. You will be pleased with their sincere efforts to resolve any warranty issues or related concerns.

WARNING!

Engine exhaust (internal combustion engines only), some of its constituents, and certain vehicle components contain, or emit, chemicals known to the State of California to cause cancer and birth defects, or other reproductive harm. In addition, certain fluids contained in vehicles and certain products of component wear contain, or emit, chemicals known to the State of California to cause cancer and birth defects, or other reproductive harm.

WARRANTY INFORMATION

See the Warranty Information Booklet for the terms and provisions of FCA US LLC warranties applicable to this vehicle and market.

MOPAR PARTS

Mopar fluids, lubricants, parts, and accessories are available from an authorized dealer. They are recommended for your vehicle in order to help keep the vehicle operating at its best.

REPORTING SAFETY DEFECTS

In The 50 United States And Washington, D.C.

If you believe that your vehicle has a defect that could cause a crash or cause injury or death, you should immediately inform the National Highway Traffic Safety Administration (NHTSA) in addition to notifying FCA US LLC.

If NHTSA receives similar complaints, it may open an investigation, and if it finds that a safety defect exists in a group of vehicles, it may order a recall and remedy campaign. However, NHTSA cannot become involved in individual problems between you, your authorized dealer or FCA US LLC.

To contact NHTSA, you may call the Vehicle Safety Hotline toll free at 1-888-327-4236 (TTY: 1-800-424-9153); or go to http://www.safercar.gov; or write to: Administrator, NHTSA, 1200 New Jersey Avenue, SE., West Building, Washington, D.C. 20590. You can also obtain other information about motor vehicle safety from http://www.safercar.gov.

In Canada

If you believe that your vehicle has a safety defect, you should contact the Customer Service Department immediately. Canadian customers who wish to report a safety defect to the Canadian government should contact Transport Canada, Motor Vehicle Defect Investigations and Recalls at 1-800-333-0510 or go to http://www.tc.gc.ca/roadsafety/.

PUBLICATION ORDER FORMS

To order the following manuals, you may use either the website or the phone numbers listed below. Visa, Mastercard, American Express, and Discover orders are accepted.

Service Manuals

These comprehensive Service Manuals provide the information that students and professional technicians need in diagnosing/troubleshooting, problem solving, maintaining, servicing, and repairing FCA US LLC vehicles. A complete working knowledge of the vehicle, system, and/or components is written in straightforward language with illustrations, diagrams, and charts.

Diagnostic Procedure Manuals

Diagnostic Procedure Manuals are filled with diagrams, charts and detailed illustrations. These practical manuals make it easy for students and technicians to find and fix problems on computer-controlled vehicle systems and features. They show exactly how to find and correct problems the first time, using step-by-step troubleshooting and drivability procedures, proven diagnostic tests and a complete list of all tools and equipment.

Owner's Manuals

These Owner's Manuals have been prepared with the assistance of service and engineering specialists to acquaint you with specific FCA US LLC vehicles. Included are starting, operating, emergency and maintenance procedures as well as specifications, capabilities and safety tips.

Call toll free at:

- **1-800-890-4038 (U.S.)**
- **1-800-387-1143 (Canada)**

Or

Visit us on the Worldwide Web at:

- www.techauthority.com

INDEX

About Your Brakes 237, 372
Adding Engine Coolant (Antifreeze) 333
Adding Fuel 261
Adding Washer Fluid. 320
Additives, Fuel 375
Adjust
  Down 45
  Forward 45
  Rearward 45
  Up 45
Air Bag 192
  Air Bag Operation 194
  Air Bag Warning Light 191
  Driver Knee Air Bag 195
  Enhanced Accident Response 200, 310
  Event Data Recorder (EDR) 310
  If A Deployment Occurs 199
  Knee Impact Bolsters 194
  Maintaining Your Air Bag System 201
  Side Air Bags 195
  Transporting Pets 225
Air Bag Light. 146, 191, 227
Air Bag Maintenance 201
Air Cleaner, Engine (Engine Air Cleaner Filter). 324
Air Conditioner Maintenance 325
Air Conditioning Filter. 100
Air Conditioning, Operating Tips 100
Air Conditioning, Rear Zone 80
Air Conditioning Refrigerant 325, 326
Air Conditioning System 325
Air Filter 324
Air Pressure, Tires 352
Alarm, Panic. 19
Alarm (Security Alarm). 28, 147
Alarm System (Security Alarm) 28
All Wheel Drive (AWD) 250
Alterations/Modifications, Vehicle 6
Antifreeze (Engine Coolant) 332, 381
  Disposal 334
Anti-Lock Brake System (ABS) 160
Anti-Lock Warning Light 153
Arming System (Security Alarm) 28
Assist, Hill Start 166
Audio Systems (Radio). 387
Auto Down Power Windows 103
Automatic Dimming Mirror 59
Automatic Door Locks. 32
Automatic Headlights 65
Automatic Oil Change Indicator 139
Automatic Transmission 239, 340

Adding Fluid 338, 339, 340, 384
Fluid And Filter Changes 340
Fluid Change 340
Fluid Level Check 337, 338, 339
Fluid Type 384
Special Additives 337
Autostick 246
Auto Unlock, Doors 32
Auxiliary Electrical Outlet (Power Outlet) 126
Auxiliary Power Outlet 126

Back-Up Lights 284
Battery. 148, 321
Charging System Light 148
Keyless Key Fob Replacement 19
Location 321
Belts, Seat 226
Bluetooth
Connecting To A Particular Mobile Phone Or Audio Device After Pairing 458
Connect Or Disconnect Link Between the Uconnect Phone And Mobile Phone 447, 470
Pair (Link) Uconnect Phone To A Mobile Phone .437, 456
Body Mechanism Lubrication 327
B-Pillar Location 346
Brake Assist System. 162
Brake Control System, Electronic. 161
Brake Fluid 384
Brake, Parking. 237
Brakes 372
Brake System 336, 372
Fluid Check 336, 384
Master Cylinder 336
Parking 237
Warning Light 146
Brake/Transmission Interlock 241
Bulb Replacement 280
Bulbs, Light 229, 280

Camera, Rear 259
Capacities, Fluid 381
Caps, Filler
Oil (Engine) 318, 323
Power Steering 249
Radiator (Coolant Pressure) 334
Carbon Monoxide Warning 226, 378
Cargo Area Cover 111
Cargo Area Features. 110
Cargo Compartment 110
Luggage Carrier 132

Cargo Load Floor 110
Cargo Management System 110
Rollaway Tonneau Cover 111
Tri-Fold Load Floor 110
Cargo Tie-Downs. 113
Cargo (Vehicle Loading). 110, 263
Car Washes. 366
Cellular Phone 480
Certification Label 263
Chains, Tire 361
Changing A Flat Tire 291, 341
Chart, Tire Sizing. 343
Check Engine Light (Malfunction Indicator Light). . . .156
Checking Your Vehicle For Safety 225
Checks, Safety 225
Child Restraint 203
Child Restraints
Booster Seats 210
Child Restraints 203
Child Seat Installation 220
How To Stow An Unused ALR Seat Belt 218
Infants And Child Restraints 205
Locating The LATCH Anchorages 214
Lower Anchors And Tethers For Children 212
Older Children And Child Restraints 206
Seating Positions 211
Using The Top Tether Anchorage 223
Child Safety Locks 37
Clean Air Gasoline 375
Cleaning
Wheels 360
Coin Holder 121
Cold Weather Operation. 236
Compact Disc (CD) Maintenance. 492
Compact Spare Tire 358
Computer, Trip/Travel 142
Connector
UCI 417
Universal Consumer Interface (UCI) 417
Console, Floor 121
Contract, Service 496
Coolant Pressure Cap (Radiator Cap). 334
Cooling System 331
Adding Coolant (Antifreeze) 333
Coolant Capacity 381
Coolant Level 331, 334
Disposal Of Used Coolant 334
Drain, Flush, And Refill 332
Inspection 334
Points To Remember 335

Pressure Cap 334
Radiator Cap 334
Selection Of Coolant (Antifreeze) 332, 381, 382
Corrosion Protection 365
Cruise Light 154
Cupholders 125, 369
Customer Assistance 494

Daytime Brightness, Interior Lights. 69
Daytime Running Lights 65
Dealer Service 322
Defroster, Windshield. 227
Delay (Intermittent) Wipers 70
Diagnostic System, Onboard. 154
Dimmer Switch, Headlight. 65
Dipsticks
Automatic Transmission 338, 339
Oil (Engine) 320
Power Steering 249
Disabled Vehicle Towing 308
Disposal
Antifreeze (Engine Coolant) 334
Door Ajar 149
Door Ajar Light. 149
Door Locks, Automatic 32
Door Opener, Garage 114
Driver's Seat Back Tilt 39
Driving
Through Flowing, Rising, Or Shallow Standing Water 277
DVD Player (Video Entertainment System). 417

E-85 Fuel 378
Electrical Outlet, Auxiliary (Power Outlet) 126
Electrical Power Outlets 126
Electric Remote Mirrors 62
Electronic Brake Control System 161
Anti-Lock Brake System 160
Traction Control System 169
Electronic Speed Control (Cruise Control) 250
Electronic Stability Control (ESC) 163
Electronic Throttle Control Warning Light 149
Emergency, In Case Of
Freeing Vehicle When Stuck 307
Hazard Warning Flasher 280
Jacking 291, 341
Jump Starting 302
Towing 308
Emission Control System Maintenance. 156
Engine 318

Air Cleaner 324
Block Heater 236
Break-In Recommendations 237
Checking Oil Level 320
Compartment 318, 319
Compartment Identification 319
Coolant (Antifreeze) 331, 382
Cooling 331
Exhaust Gas Caution 226, 378
Fails To Start 236
Flooded, Starting 236
Fuel Requirements 375
Jump Starting 302
Oil 322, 381, 382
Oil Change Interval 139
Oil Filler Cap 318, 323
Oil Filter 324
Oil Selection 322, 381
Oil Synthetic 324
Overheating 305
Starting 233, 234
Engine Oil Viscosity. 323
Engine Oil Viscosity Chart 323
Enhanced Accident Response Feature 200, 310
Ethanol 376, 378
Exhaust Gas Caution. 226, 378
Exhaust System 226, 329
Exterior Lighting. 64
Exterior Lights 64, 229

Filters
Air Cleaner 324
Air Conditioning 100
Engine Oil 324, 382
Engine Oil Disposal 324
Flashers 280
Hazard Warning 280
Turn Signal 67, 154, 229
Flash-To-Pass 65
Flexible Fuel Vehicles
Cruising Range 380
Engine Oil 379
Fuel Requirements 378, 379
Maintenance 380
Replacement Parts 380
Starting 380
Flooded Engine Starting. 236
Floor Console 121
Fluid, Brake 384
Fluid Capacities. 381

Fluid Leaks 229
Fluid Level Checks
Automatic Transmission 338, 339
Brake 336, 384
Cooling System 331
Engine Oil 320
Power Steering 249, 384
Fluids And Lubricants 382
Fog Lights 67, 283
Fog Light Service. 283
Folding Rear Seat 39, 42, 50
Four-Way Hazard Flasher. 280
Freeing A Stuck Vehicle 307
Fuel 375
Additives 375
Clean Air 375
Ethanol 376, 378
Gasoline 375
Materials Added 375
Methanol 376
Octane Rating 375, 382
Requirements 375
Specifications 382
Tank Capacity 381
Fuel, Flexible. 378
Fueling. 261
Fuses 285

Garage Door Opener (HomeLink) 114, 119
Gasoline, Clean Air 375
Gasoline, Reformulated 375
Gear Ranges 242
Gear Select Lever Override. 306
General Information. 451
Glass Cleaning 369
Gross Axle Weight Rating 263, 265
Gross Vehicle Weight Rating 263, 264
GVWR 263

Hazard
Driving Through Flowing, Rising, Or Shallow Standing Water 277
Hazard Warning Flasher. 280
Headlights
Automatic 65
Bulb Replacement 282
Cleaning 366
Delay 66
High Beam 65, 282
High Beam/Low Beam Select Switch 65

Lights On Reminder 66
On With Wipers 66
Passing 65
Switch 64
Time Delay 66
Head Restraints 52
Heated Mirrors 62
Heater, Engine Block 236
High Beam/Low Beam Select (Dimmer) Switch 65
Hill Start Assist 166
Hitches
Trailer Towing 266
Holder, Coin 121
Holder, Cup 125
HomeLink (Garage Door Opener) 114
Hood Prop 107
Hood Release 107

Immobilizer (Sentry Key) 27
Inside Rearview Mirror 58
Instrument Cluster 136, 154
Instrument Panel Lens Cleaning 368
Interior Appearance Care 367
Interior Fuses 286
Interior Lights. 68
Intermittent Wipers (Delay Wipers). 70
Introduction 4
Inverter, Power 130
iPod/USB/MP3 Control. 417
Bluetooth Streaming Audio 458

Jacking Instructions 294
Jack Location 292
Jack Operation 291, 294, 341
Jump Starting 302

Key Fob
Panic Alarm 19
Programming Additional Key Fobs 21, 27
Key Fob Battery Service (Remote Keyless Entry) 19
Key Fob Programming (Remote Keyless Entry) 21
Key-In Reminder. 23
Keyless Enter-N-Go 33, 235
Key, Replacement 28
Keys 17
Key, Sentry (Immobilizer). 27

Lane Change And Turn Signals 67
Lane Change Assist. 67
Lap/Shoulder Belts 179

Latches 229
Hood 107
Lead Free Gasoline 375
Leaks, Fluid 229
Life Of Tires 355
Liftgate 109
Liftgate Window Wiper/Washer 72
Light Bulbs 229, 280
Lights 68, 229
Air Bag 146, 191, 227
Automatic Headlights 65
Back-Up 284
Brake Assist Warning 166
Brake Warning 146
Bulb Replacement 280
Cruise 154
Daytime Running 65
Dimmer Switch, Headlight 64, 65
Engine Temperature Warning 147
Exterior 229
Fog 67, 283
Hazard Warning Flasher 280
Headlights 64, 282
Headlights On Reminder 66
Headlights On With Wipers 66
Headlight Switch 64
High Beam 65, 282
Instrument Cluster 64
Interior 68
License 284
Lights On Reminder 66
Malfunction Indicator (Check Engine) 150
Parade Mode (Daytime Brightness) 69
Park 153, 282
Passing 65
Rear Servicing 284
Rear Tail Lamps 284
Seat Belt Reminder 146
Security Alarm 147
Service 280
Side Marker 282
Tire Pressure Monitoring (TPMS) 151, 170
Traction Control 166
Turn Signal 64, 67, 154, 229, 282, 284
Vanity Mirror 63
Warning (Instrument Cluster Description) 147, 154
Load Floor, Cargo 110
Loading Vehicle 263, 264
Capacities 264
Tires 346

Load Shed
Battery Saver Mode 143
Battery Saver On 143
Electrical Load Reduction 143
Intelligent Battery Sensor 143
Locks
Automatic Door 32
Auto Unlock 32
Child Protection 37
Power Door 32
Low Tire Pressure System. 170
Lubrication, Body 327
Luggage Rack (Roof Rack) 132
Lug Nuts 373

Maintenance Free Battery 321
Malfunction Indicator Light (Check Engine) 150, 156
Manual, Service. 498
Manual Transaxle
Fluid Level Check 340
Marker Lights, Side 282
Master Cylinder (Brakes) 336
Memory Feature (Memory Seat) 39
Memory Seat 39
Memory Seats And Radio 39
Methanol 376
Mini-Trip Computer. 142
Mirrors 58, 61
Automatic Dimming 59
Electric Powered 62
Electric Remote 62
Exterior Folding 61
Heated 62
Outside 60
Rearview 58
Vanity 63
Modifications/Alterations, Vehicle 6
Monitor, Tire Pressure System. 170
Mopar Parts 497
Multi-Function Control Lever. 64

New Vehicle Break-In Period 237

Occupant Restraints. 176
Octane Rating, Gasoline (Fuel) 375, 382
Oil Change Indicator 139
Oil Change Indicator, Reset 139
Oil, Engine. 322, 382
Capacity 381
Change Interval 139, 322

Checking 320
Dipstick 320
Disposal 324
Filter 324, 382
Filter Disposal 324
Identification Logo 323
Materials Added To 324
Pressure Warning Light 148
Recommendation 322, 381
Synthetic 324
Viscosity 323, 381
Oil Filter, Change 324
Oil Filter, Selection. 324
Oil Pressure Light 148
Onboard Diagnostic System 154
Opener, Garage Door (HomeLink). 114
Operating Precautions 154
Operator Manual (Owner's Manual). 4
Outside Rearview Mirrors 60
Overheating, Engine 305
Owner's Manual (Operator Manual) 4, 498

Paint Care. 365
Panic Alarm 19
Parking Brake 237
ParkSense System, Rear 253
Passenger Seat Back Tilt (Easy Entry System). 48
Pets 225
Phone (Pairing) 457
Phone (Uconnect) 433, 452
Placard, Tire And Loading Information 346
Power
Brakes 372
Distribution Center (Fuses) 288
Door Locks 32
Inverter 130
Mirrors 62
Outlet (Auxiliary Electrical Outlet) 126
Seats 44
Steering 248, 249
Sunroof 105
Transfer Unit 340
Windows 102
Power Seats
Down 45
Forward 45
Rearward 45
Up 45
Power Steering Fluid 384
Power Transfer Unit 340, 384

Pregnant Women And Seat Belts 185
Preparation For Jacking 293
Pretensioners
Seat Belts 186

Radial Ply Tires 353
Radiator Cap (Coolant Pressure Cap). 334
Radio Frequency
General Information 21, 26, 28
Radio Operation 480
Radio Remote Controls 416
Rear Air Conditioning 80
Rear Axle (Differential) 340
Rear Camera 259
Rear Cupholder. 125
Rear Drive Assembly 340
Rear Liftgate 109
Rear ParkSense System 253
Rear Seat, Folding 39, 42, 50
Rear Wiper/Washer. 72
Reclining Front Seats 41
Reclining Rear Seats 43, 50
Recreational Towing. 275
Reformulated Gasoline. 375
Refrigerant 326
Release, Hood 107
Reminder, Lights On 66
Reminder, Seat Belt 178
Remote Keyless Entry
Panic Alarm 19
Programming Additional Key Fobs 21, 27
Remote Sound System (Radio) Controls. 416
Remote Starting
Exit Remote Start Mode 26
To Exit Remote Start Mode And Drive The Vehicle . .26
Replacement Bulbs 280
Replacement Keys. 28
Replacement Tires 355
Reporting Safety Defects 497
Resetting Oil Change Indicator 139
Restraint, Head. 52
Restraints, Child 203
Retractable Cargo Area Cover 111
Reverse Lights. 284
Rocking Vehicle When Stuck. 307
Roof Rack (Luggage Rack) 132
Rotation, Tires. 362

Safety Checks Inside Vehicle. 226
Safety Checks Outside Vehicle 229

Safety Defects, Reporting 497
Safety, Exhaust Gas 226
Safety Information, Tire 341
Safety Tips 225
Seat Belt
Adjustable Upper Shoulder Belt Anchorage 183
Lap/Shoulder Belt Operation 181
Lap/Shoulder Belts 179
Lap/Shoulder Belt Untwisting 183
Pregnant Women 185
Seat Belt Extender 184
Seat Belt Pretensioner 186
Seat Belt Reminder 178
Seat Belt Maintenance 367
Seat Belt Reminder 178
Seat Belts 177, 226
Adjustable Shoulder Belt 183
Adjustable Upper Shoulder Anchorage 183
Child Restraint 203
Extender 184
Front Seat 177, 179, 181
Inspection 226
Operating Instructions 181
Pregnant Women 185
Pretensioners 186
Rear Seat 179
Reminder 146
Untwisting Procedure 183
Seats 39, 45, 46
Adjustment 39, 45
Easy Entry 39, 48
Heated 39, 46
Height Adjustment 41, 44
Memory 39
Power 44
Rear Folding 39, 42, 50
Reclining 41
Reclining Rear 43, 50
Seatback Release 39, 42, 50
Tilting 39, 44
Vented 39
Ventilated 39
Security Alarm 28, 147
Selection Of Coolant (Antifreeze) 382
Sentry Key
Key Programming 27
Sentry Key (Immobilizer) 27
Sentry Key Replacement 28
Service Assistance 494
Service Contract 496

Service Manuals 498
Shift Lever Override 306
Shoulder Belts 179
Signals, Turn 67, 154, 229, 284
Snow Chains (Tire Chains) 361
Snow Tires 357
Spare Tire 292, 358, 359, 360
Spark Plugs 382
Specifications
  Fuel (Gasoline) 382
  Oil 382
Speed Control
  Accel/Decel 252
  Cancel 253
  Resume 253
Speed Control (Cruise Control) 250
Starting 233, 234
  Automatic Transmission 233
  Cold Weather 236
  Engine Fails To Start 236
Starting And Operating 233, 234
Starting Procedures 233, 234
Steering 56
  Column Controls 64
  Column Lock 56
  Power 248, 249
  Tilt Column 56
  Wheel, Heated 57
  Wheel, Tilt 56
Steering Wheel Audio Controls 416, 417
Steering Wheel Mounted Sound System Controls 416
Storage, Vehicle 100
Stuck, Freeing 307
Sunglasses Storage 131
Sun Roof 105
Sun Visor Extension 64
Supplemental Restraint System - Air Bag 192
Sway Control, Trailer 266
Synthetic Engine Oil 324

Taillights 284
Telescoping Steering Column 56
Tie Down Hooks, Cargo 113
Tilt Steering Column 56
Time Delay, Headlight 66
Tire And Loading Information Placard 346
Tire Markings 341
Tires 229, 350, 358, 364
  Aging (Life Of Tires) 355
  Air Pressure 350

Chains 361
Changing 291, 341
Compact Spare 358
General Information 350, 358
High Speed 352
Inflation Pressures 352
Jacking 291, 341
Life Of Tires 355
Load Capacity 346, 348
Pressure Monitor System (TPMS) 170
Pressure Warning Light 151
Quality Grading 364
Radial 353
Replacement 355
Rotation 362
Safety 341, 350
Sizes 343
Snow Tires 357
Spare Tire 292, 358, 359, 360
Spinning 354
Trailer Towing 270
Tread Wear Indicators 354
Wheel Nut Torque 373
Tire Safety Information. 341
Tongue Weight/Trailer Weight 269
To Open Hood 107
Towing. 264
Disabled Vehicle 308
Guide 267
Recreational 275
Weight 267
Towing Vehicle Behind A Motorhome 275
Traction 276, 277
Traction Control 169
Trailer Towing. 264
Cooling System Tips 274
Hitches 266
Minimum Requirements 269
Tips 273
Trailer And Tongue Weight 269
Wiring 272
Trailer Towing Guide. 267
Trailer Weight 267
Transaxle
Autostick 246
Transmission
Automatic 239, 337
Fluid 337
Maintenance 337
Transmitter, Garage Door Opener (HomeLink) 114

Transporting Pets 225
Tread Wear Indicators 354
Turn Signals 67, 154, 284

UCI Connector 417
Uconnect
Advanced Phone Connectivity 447, 470
Operation 435, 454
Phone Call Features 440, 463
Phone Features 444, 467
Screen Activated Features 388
Things You Should Know About Your Uconnect Phone 448, 471
Uconnect Settings 19, 26
Uconnect Phone 433, 436, 437, 452, 455
Answer Or Ignore An Incoming Call — No Call Currently In Progress 465
Bluetooth Communication Link 475
Call By Saying A Phonebook Name 441, 464
Call Continuation 467
Call Controls 441, 464
Cancel Command 437, 455
Connecting To A Particular Mobile Phone Or Audio Device After Pairing 458
Connect Or Disconnect Link Between The Uconnect Phone And Mobile Phone 470
Far End Audio Performance 472
Help Command 437, 455
Join Calls 443, 466
Making A Second Call While Current Call Is In Progress 466
Natural Speech 436, 455
Place/Retrieve A Call From Hold 466
Power-Up 475
Redial 467
Toggling Between Calls 466
Transfer Call To And From Mobile Phone 447, 470
Voice Command 471
Ways To Initiate A Phone Call 463
Uconnect Settings 18
Uconnect Voice Command 482
Underhood Fuses 288
Uniform Tire Quality Grades 364
Universal Consumer Interface (UCI) Connector 417
Universal Transmitter. 114
Unleaded Gasoline 375
Untwisting Procedure, Seat Belt 183

Vanity Mirrors 63
Vehicle Certification Label 263
Vehicle Identification Number (VIN) 372
Vehicle Loading 263, 264, 348
Vehicle Modifications/Alterations. 6
Vehicle Security Alarm (Security Alarm) 28
Vehicle Storage 100
Viscosity, Engine Oil 323
Voice Command 482

Warning Flasher, Hazard 280
Warning Lights (Instrument Cluster Description) 151
Warnings And Cautions 6
Warranty Information 497
Washer
  Adding Fluid 320
Washers, Windshield 69, 71, 320
Washing Vehicle 366
Water
  Driving Through 277
Wheel And Wheel Trim 360
Wheel And Wheel Trim Care 360
Wind Buffeting 104, 106
Window Fogging. 100
Windows 102
  Power 102
  Reset Auto-Up 104
Windshield Defroster 227
Windshield Washers 69, 71
  Fluid 320
Windshield Wiper Blades 327
Windshield Wipers 69
Wiper Blade Replacement. 327
Wiper, Delay. 70
Wiper, Rear 72
Wipers, Intermittent 70
Wrecker Towing 308

INSTALLATION OF RADIO TRANSMITTING EQUIPMENT

Special design considerations are incorporated into this vehicle's electronic system to provide immunity to radio frequency signals. Mobile two-way radios and telephone equipment must be installed properly by trained personnel. The following must be observed during installation.

The positive power connection should be made directly to the battery and fused as close to the battery as possible. The negative power connection should be made to body sheet metal adjacent to the negative battery connection. This connection should not be fused.

Antennas for two-way radios should be mounted on the roof or the rear area of the vehicle. Care should be used in mounting antennas with magnet bases. Magnets may affect the accuracy or operation of the compass on vehicles so equipped.

The antenna cable should be as short as practical and routed away from the vehicle wiring when possible. Use only fully shielded coaxial cable.

Carefully match the antenna and cable to the radio to ensure a low Standing Wave Ratio (SWR).

Mobile radio equipment with output power greater than normal may require special precautions.

All installations should be checked for possible interference between the communications equipment and the vehicle's electronic systems.

STICK WITH THE SPECIALISTS®

18JC-126-AB
©2017 FCA US LLC. All Rights Reserved.
Dodge is a registered trademark of FCA US LLC.

Second Edition
Printed in the U.S.A.