KANGOO Z.E.

DRIVER'S HANDBOOK

RENAULT Z.E.

RENAULT

Welcome to your new electric vehicle

This driver's handbook contains the information necessary:
- for you to familiarise yourself with your vehicle, to use it to its best advantage and to benefit fully from the all the functions and the technical developments it incorporates.
- to ensure that it always gives the best performance by following the simple, but comprehensive advice concerning regular maintenance.
- to enable you to deal quickly with minor faults not requiring specialist attention.

It is well worth taking a few minutes to read this handbook to familiarise yourself with the information and guidelines it contains about the vehicle and its functions and new features. If certain points are still unclear, our Network technicians will be only too pleased to provide you with any additional information.

The following symbol will help you when reading this handbook:

To indicate a hazard, danger or safety recommendation.

The descriptions of the models given in this handbook are based on the technical specifications at the time of writing. **This handbook covers all items of equipment** (both standard and optional) **available for these models but whether or not these are fitted to the vehicle depends on the version, options selected and the country where the vehicle is sold.**

This handbook may also contain information about items of equipment to be introduced later in the model year.

Throughout the manual, the "approved Dealer" is your RENAULT Dealer.

Enjoy driving your new vehicle.

Translated from French. Copying or translation, in part or in full, is forbidden unless prior written permission has been obtained from the vehicle manufacturer.

0.2

C O N T E N T S

Sections

Getting to know your vehicle 1

Driving 2

Your comfort 3

Maintenance 4

Practical advice 5

Technical specifications 6

Alphabetical index 7

0.4

Section 1: Getting to know your vehicle

Electric vehicle: introduction . . . 1.2
Important recommendations . . . 1.7
Electric vehicle: charging . . . 1.8
Key, radio frequency remote control: general information, use . . . 1.14
Doors . . . 1.17
Automatic locking when driving . . . 1.24
Headrests/Front seats . . . 1.25
Roof flap . . . 1.30
Swivelling partition . . . 1.32
Seat belts . . . 1.33
Methods of restraint in addition to the front seat belts . . . 1.37
Side protection devices . . . 1.40
Additional methods of restraint . . . 1.41
Child safety: general information . . . 1.42
- Choosing a child seat mounting . . . 1.45
- Fitting a child seat . . . 1.47
- Deactivating/activating the front passenger airbag . . . 1.52

Steering wheel/Power-assisted steering . . . 1.55
Driving position . . . 1.56
Warning lights . . . 1.60
Displays and indicators . . . 1.63
On-board computer . . . 1.66
Clock and exterior temperature . . . 1.75
Door mirrors . . . 1.76
Audible and visual signals . . . 1.77
Horn . . . 1.78
External lighting and signals . . . 1.79
Electric beam height adjustment . . . 1.82
Windscreen washers and wipers . . . 1.83
Additional heating tank . . . 1.86

ELECTRIC VEHICLE: introduction (1/5)

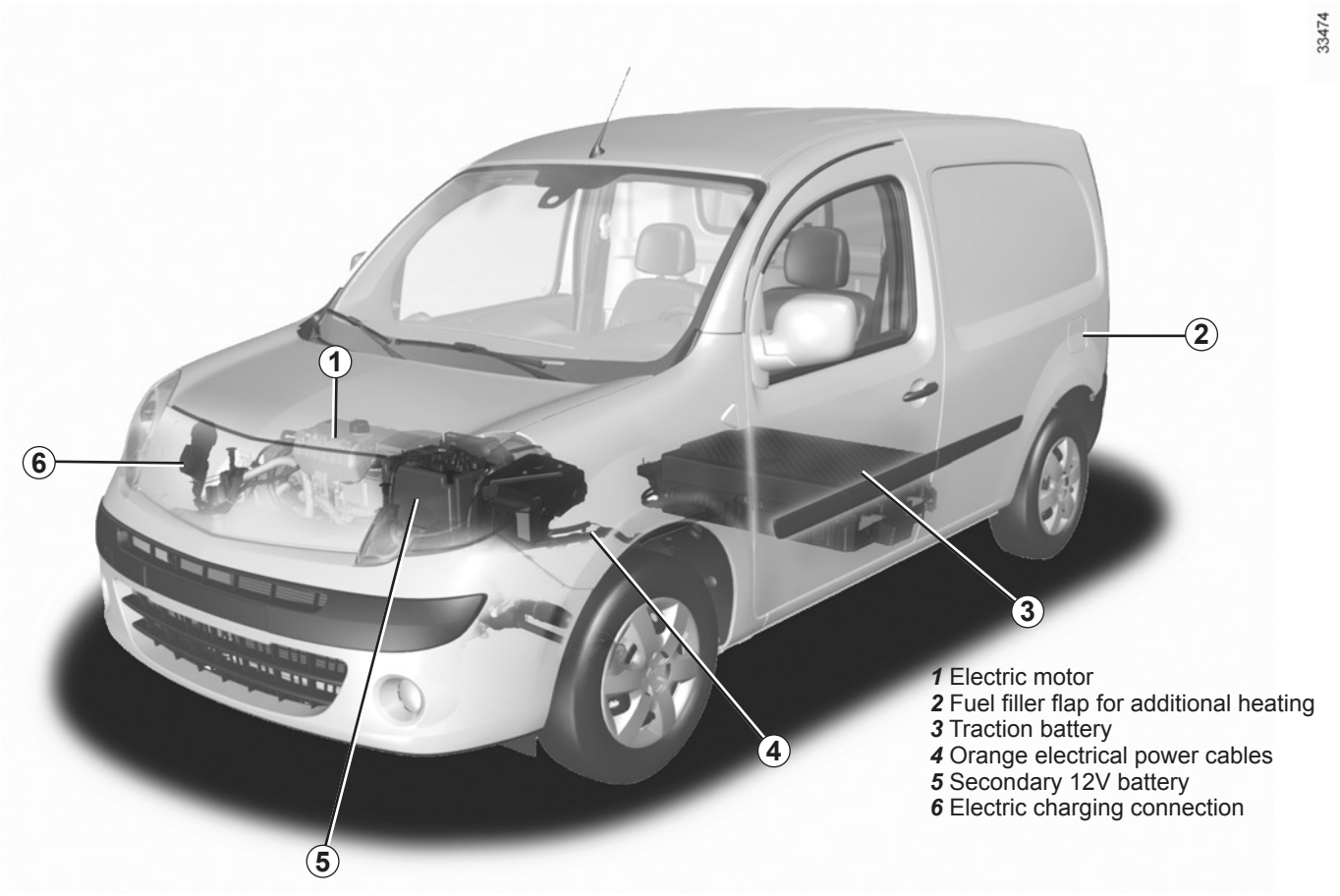

Electric vehicles have special features, but operate in a similar manner to conventional vehicles.

The main difference in electric vehicles is the exclusive use of electric energy instead of fuel, as used in conventional vehicles.

We therefore recommend that you read these instructions describing your electric vehicle carefully.

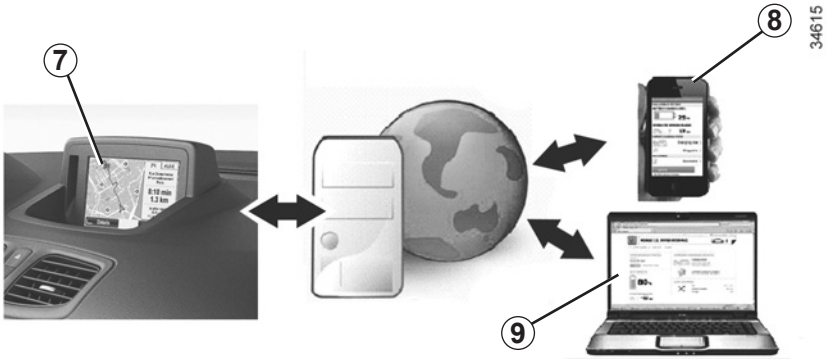

Connected services
(depending on vehicle)

Your electric vehicle has connected services which, amongst other things, enable it to detect the charge status of your vehicle using some mobile phones ***8*** or your computer ***9***. This information is also available directly on the instrument panel ***7*** of your vehicle.

For further information, please contact an authorised dealer.

You can subscribe to a connected service or extend it at any time by consulting an authorised dealer.

Batteries

Your electric vehicle has two types of battery:
– a 400V traction battery;
– a standard 12V battery, identical to the one used in conventional vehicles.

Traction battery

This battery stores the energy necessary to operate the motor in your electric vehicle properly. As with any battery, it discharges after use, and must be regularly recharged.

You do not have to wait until the traction battery hits the reserve level in order to recharge it.

Charging times vary between 10 and 12 hours from a domestic power supply, or 6 to 9 hours with a special wall socket or public terminal.
Your vehicle range will depend on the charge level of the traction battery, and also on your driving style.
Please refer to information on “Vehicle range: recommendations” in Section 2.

12 volt battery

The second battery on your vehicle is a 12V battery, similar to those used on conventional vehicles: this supplies the energy required to operate vehicle equipment (lights, washer/wipers, audio system, etc).

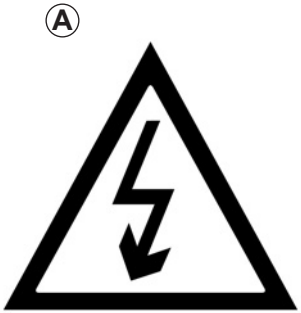

33436

The ***A*** symbol identifies the electrical elements in your vehicle which may present health risks.

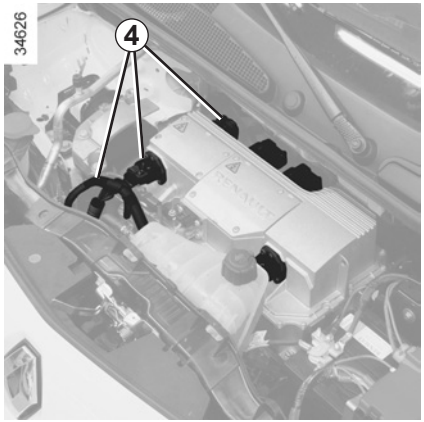

34626

400 volt electrical circuit

The 400V electrical circuit can be recognised by the orange ***4*** cables and by the elements signalled using the ⚠ symbol.

The vehicle drive system in an electric vehicle uses an alternating voltage of approximately 400 volts. This system can get hot during and after switching off the ignition. Respect warning messages given on the labels in the vehicle.

All interventions or modifications to the 400V electrical system (components, cables, connectors, traction battery) are strictly prohibited due to the risks they present to your safety. Please contact an authorised dealer.

The risk of serious burns or electric shocks can lead to death.

Driving

As with a car with an automatic gearbox, you will have to get used to not using your left foot, and not using this foot to brake.

When driving, if you lift your foot off the accelerator pedal or depress the brake pedal, the motor generates electrical current during deceleration, and this energy is used to brake the vehicle and recharge the traction battery. Please refer to the information on the “Charge meter” in Section 2.

Special conditions

After a maximum charge of the battery and during the first few miles of using the vehicle, the engine brake will be temporarily reduced. Please adapt your driving style appropriately.

The engine brake should under no circumstances be used as a substitute for the brake pedal.

Bad weather, flooded roads:

Do not drive through floods if the depth of water is above the lower edge of the wheel rims.

Obstructions to the driver
On the driver’s side, only use mats suitable for the vehicle, attached with the pre-fitted components, and check the fitting regularly. Do not lay one mat on top of another.
There is a risk of wedging the pedals

Noise

Electric vehicles are particularly quiet. You will not yet necessarily be used to it, and neither will other road users. It is difficult for them to hear the vehicle when it is moving.
We would therefore recommend that you are aware of the horn and make use of it, especially when driving in a built-up area or when manoeuvring.
Please refer to the information on the “Horn” in Section 1.
As the motor is silent, you will hear noises that you are not used to hearing (aerodynamic noises, tyre noise, etc.)
When charging, the vehicle may emit noises (fan, relays, etc).

Your electric vehicle is silent, so when you get out, always check that the gear selector is on **P**, engage the handbrake and switch off the ignition.

RISK OF SERIOUS INJURY

IMPORTANT RECOMMENDATIONS

Please read these instructions carefully. Failure to follow these instructions may lead to a **risk of fire, serious injury or electric shock which may present a risk to life.**

In the event of an accident or impact

In the event of an accident or an impact to the underside of the vehicle (e.g.: striking a post, raised kerb or other street furniture), this may damage the electric circuit or the traction battery.
Have the vehicle checked by an authorised dealer.

Never touch the “400 volt” components or orange cables which are exposed and visible inside or outside the vehicle.

In the event of serious damage to the traction battery, leaks may occur:
– never touch the liquids (fluids, etc.) coming from the traction battery;
– in the event of contact with the body, wash the affected area with plenty of water and consult a doctor as soon as possible.

In the event of an impact, even slight, against the charging flap and/or valve, have them checked by an authorised dealer as soon as possible.

In the event of fire

In the event of fire, make everyone evacuate the vehicle immediately and contact the emergency services, informing them that this is an electric vehicle.
Only use extinguishing agents ABC or BC that are permitted for use with electrical fires. Do not use water or other extinguishing agents.
In the event of damage to the electrical circuit, please call an authorised dealer.

All towing operations

Please refer to the information on “Towing, breakdowns” in Section 5.

Washing the vehicle

Never wash the engine compartment, the charging connection or the traction battery with a high-pressure jet.
This risks damaging the electric circuit.
Never wash the vehicle while it is charging.
Risk of electric shock and a risk to life.

33490

Charging diagram

1 Specific wall socket or recharging terminal

2 Electric charging connection

3 Charging cord

If you have any questions regarding the equipment needed for charging, please ask an authorised dealer.

Important recommendations for charging your vehicle

Please read these instructions carefully. Failure to follow these instructions may lead to **a risk of fire, serious injury or electric shocks which could result in death.**

Installation for using a standard charging cord

Have a special wall socket installed by a qualified professional.

Installation for using an occasional charging cord

Have a qualified professional check that each socket you intend to use with the occasional charging cord complies with the standards and regulations in force in your country, especially that they have:

– a Type A residual differential current of 30 mA;
– a device to protect against overvoltage (16A fuse or circuit breaker for the socket used);
– protection against overvoltage relating to lightning in exposed areas.

You are recommended to test the residual differential current device every month.

You are recommended to check regularly the domestic power supply as well as the special wall socket. In the event of deterioration (corrosion, browning, etc.), do not use it.

Please read the instructions that come with the occasional charging cord carefully to learn about usage precautions and how to use the cord.

Charging

Do not do anything to the vehicle during charging (washing, working in the engine compartment, etc.).

In the event of the presence of water, signs of corrosion or foreign bodies in the charging cord connector or in the vehicle charging socket, do not charge the vehicle. Fire hazard.

Do not attempt to touch the cord contacts, the domestic socket or the vehicle charging socket, or introduce objects into them.

Never plug the charging cord into a multiple socket or an extension lead.

Do not remove or change the vehicle charging socket or the charging cord. Fire hazard.

Do not modify the installation during charging.

In the event of an impact, even slight, against the charging socket or valve, have them checked by an authorised dealer as soon as possible.

Take care of the cord: do not tread on it, immerse it in water or pull on it or let anything knock against it. Check regularly that the charging cord is in good condition. In the event of deterioration (corrosion, browning, cuts, etc.), do not use it.

Standard charging cord *3*

You are recommended to use the ***3*** cord as a priority for charging the traction battery.

This cord, designed specifically for wall sockets or public terminals, enables a full recharge of the traction battery in around 6 to 9 hours.

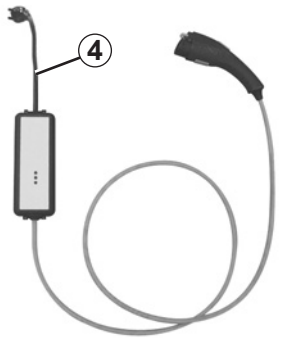

Occasional usage charging cord *4*

(depending on vehicle)

This occasional charging cord ***4***, for domestic sockets, enables a full recharge of the traction battery in around 10 to 12 hours.

This cord ***4*** should only be used for occasional charges in accordance with the installation conditions set out above.

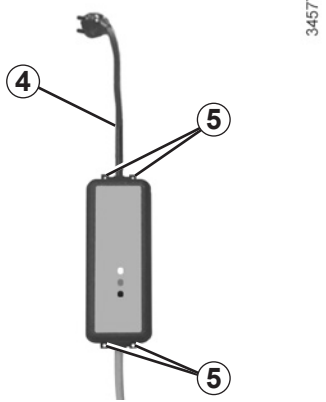

Never leave the socket hanging by the cord. Use points ***5*** to attach it.

Do not use an extension lead, multiple socket or adapter.
Fire hazard.

In the event of a problem, we recommend that you replace it with an identical cord. Please see an authorised dealer.

Charging cords ***3*** and ***4*** are stored in a bag in the vehicle boot.

Charging connection *2*

The vehicle has a charging connection located at the front of the vehicle.

Avoid charging and parking your vehicle in extreme temperatures (hot or cold).

When the vehicle is parked in temperatures lower than around -25°C, the battery cannot be charged.

Favour charging the traction battery after driving and/or in mild temperatures. Otherwise, charging may take a longer period of time or even become impossible.

In the absence of any protection against overvoltage, you are recommended not to charge the vehicle in stormy weather (lightning, etc.).

Recommendations

– In extreme heat, favour parking and recharging the vehicle in a shaded/covered location.

– Charging can be performed in the rain or snow.

Note:

If in a snowy environment, remove snow from the vehicle charging area before plugging in or disconnecting. Snow in the socket may block the insertion of the charging cord plug.

Recharging the traction battery

Switch the ignition off and unlock the opening elements:

– take the charging cord located in the boot of your vehicle;
– remove it from its storage bag;
– plug in the end of the cord to the power supply (terminal, domestic plug socket, etc.);

The charging cord cannot be plugged in or removed while the opening elements are locked.

– open the charging flap ***6***;
– open the valve ***7***;
– grab the handle ***9***;
– plug in the vehicle cord;
– make sure you have clicked the charging cord in properly. To check the locks, pull on the handle with moderate force ***9*** without pressing button ***8***.

Warning light lights up on the instrument panel.
If you wish, you can then lock your vehicle. This will make it impossible to unplug the cord from your vehicle.

When charging commences, the hazard warning lights will flash five times. A message on the instrument panel will tell you the remaining charging time.
You do not need to wait until the charge is at reserve levels to recharge your vehicle.

Precautions to take when removing from the socket

– check that the opening elements are unlocked;
– grab handle ***9*** and press button ***8***;
– while holding down button ***8***, unplug the charging cord from the vehicle. Warning light goes out on the instrument panel;
– close valve ***7***;
– close flap ***6***;
– unplug the cord from the power supply;
– store the cord in its storage bag and put away in the boot.

NB: It does not matter about the order of plugging in/unplugging of the charging cord between the vehicle and the power supply.

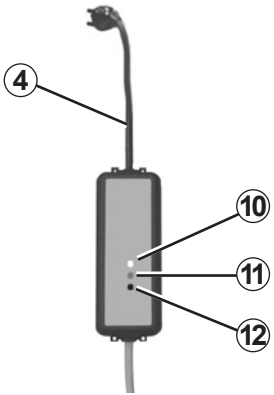

Operation notice regarding the occasional charging cord socket 4

Warning lights			Reading
READY *10* Green	CHARGE *11* Orange	FAULT *12* Red	
Switched on 0.5 seconds	Switched on 0.5 seconds	Switched on 0.5 seconds	When switching on, the warning lights go on for half a second to check that they are operating correctly.
Switched on	Switched off	Switched off	The charging cord is plugged in to the domestic plug socket and the traction battery has finished charging.
Switched on	Switched on	Switched off	The traction battery is charging.
Switched on	Switched off	Switched on or flashing	**Operating fault.** Unplug the cord and contact an authorised dealer.
Switched off	Switched off	Switched off	No electrical power has been detected at the domestic power socket. Check your electrical installation (circuit breaker, etc.) and start again. If the problem persists, unplug the cord and contact an authorised dealer.

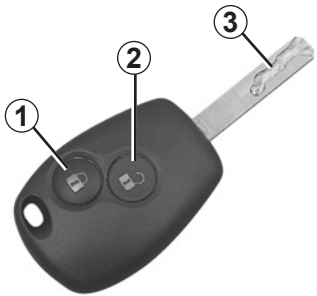

Radio frequency remote control unit

1 Locking all the opening elements.

2 Unlocking all the opening elements.

3 Coded key for ignition switch, driver's door and fuel filler cap.

Advice

Avoid leaving the remote control in hot, cold or humid areas.

The key must not be used for any function other than those described in the handbook (removing the cap from a bottle, etc.).

Driver's responsibility

Never leave your vehicle with the card inside the vehicle and never leave a child (or a pet) unsupervised. With the card in the reader, it would be possible to start the engine or operate electrical equipment such as the electric windows and there is a risk that part of their body may become trapped (neck, arm, hand, etc.).
Risk of serious injury.

Radio frequency remote control operating range

This varies according to the surroundings: take care not to lock or unlock the doors by inadvertently pressing the buttons on the remote control.

Interference
Interference by factors in the immediate vicinity (external installations or the use of equipment operating on the same frequency as the remote control) may affect the operation of the remote control.

Note: if a door is not opened within approximately 2 seconds of the door being unlocked by remote control, the doors will lock again automatically.

For replacement, or if you require an additional remote control.
You must only contact an approved Dealer.

– To replace a remote control, the vehicle must be taken to an approved Dealer as both the vehicle and the remote control are needed to initialise the system.
– Depending on the vehicle, you have the option of using up to four remote controls.

Remote control unit failure

Make sure that the correct battery type is being used, and that the battery is in good condition and inserted correctly. These batteries have a service life of approximately two years.
To learn how to change the battery, please refer to the information on the “Key, radio frequency remote control: Batteries” in Section 5.

The doors are locked and unlocked using the remote control unit.

It is powered by a battery which must be replaced (refer to the information on the “Key, radio frequency remote control: batteries” in Section 5).

The key must not be used for any function other than those described in the handbook (removing the cap from a bottle, etc.).

Driver’s responsibility

Never leave your vehicle with the key inside and never leave a child (or a pet) unsupervised, even for a short while.
They may pose a risk to themselves or to others by starting the engine, activating equipment such as the electric windows or by locking the doors.
Risk of serious injury.

Locking the doors

Press locking button ***1***.

The hazard warning lights and side indicator lights **flash twice** to indicate that the doors have locked.

If a door or the tailgate is open or not properly shut, the doors and tailgate lock then quickly unlock and the hazard warning lights and side indicator lights do not flash.

NB: while charging the traction battery, locking the opening elements will lock the vehicle charging cord.

Unlocking the doors

Press unlocking button ***2***.

Pressing the button briefly unlocks all the doors.

The hazard warning lights and side indicator lights **flash once** to indicate that the doors have unlocked.

NB: unlocking the doors will unlock the vehicle charging cord.

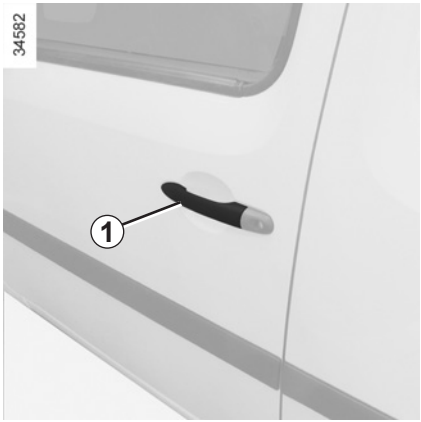

Opening from the outside

Unlock the door and pull handle ***1***. For information on unlocking the doors, refer to the information on the “Key, radio frequency remote control: use” in Section 1.

Opening from the inside

Pull handle ***2***.

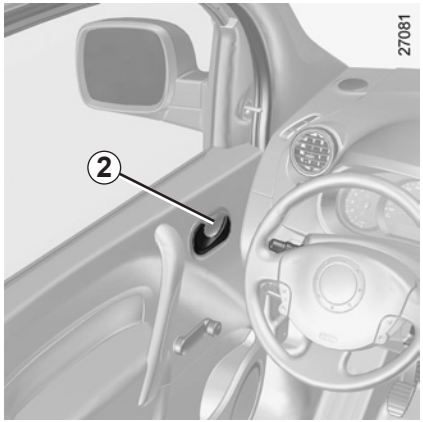

Lights-on reminder buzzer

If you have left the lights on after switching off the ignition, a reminder buzzer will sound when a door is opened (to prevent discharge of the 12 volt battery, etc.).

This warning indicates that a door is open or not properly closed.

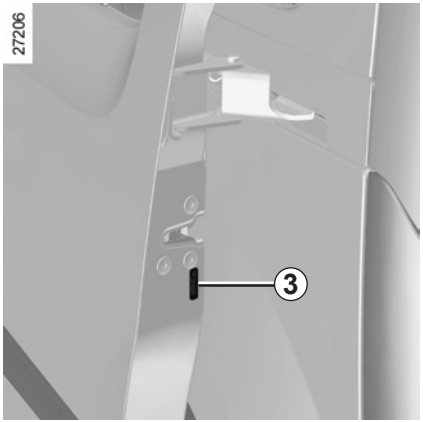

Child safety

(depending on vehicle)

At the rear, to prevent the side door from being opened from the inside, move lever ***3*** using the end of the vehicle key.

From the inside, check that the door is correctly locked.

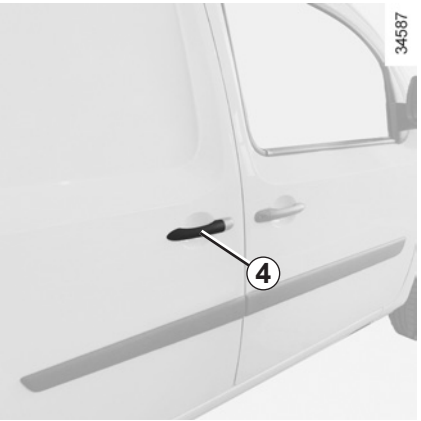

Sliding side door

Opening from the outside

Unlock the door and pull handle ***4***, then slide the door towards the rear of the vehicle until it locks in position. For information on unlocking the doors, refer to the information on the “Key, radio frequency remote control: use” in Section 1.

Opening from the inside

Pull handle ***6*** and use handle ***5*** to slide the door towards the rear of the vehicle until it locks in position.

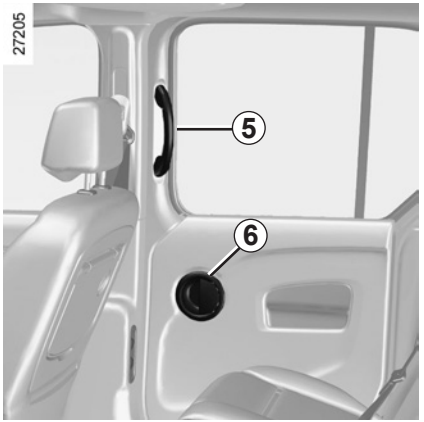

Closing from the inside

Pull handle ***5*** towards the front of the vehicle until the door is completely closed.

As a safety measure, the sliding side door located on the fuel filler flap side locks when the flap is opened. For more information, refer to the information on the “Central door locking/unlocking” in Section 1.

Recommendations concerning the sliding side door

The following precautions must be taken when opening and closing the doors or any other opening element:

- Check that the door will not come into contact with any person, animal or object.
- Only use the handles on the inside and outside of the door to operate it.
- Take care when opening and closing the door.
- Take particular care when the vehicle is parked on a slope: open the door with care until it is fully open and latches into its locking position.
- Before moving off, always ensure that the sliding door is properly closed.
- Do not use the lower support as a step.

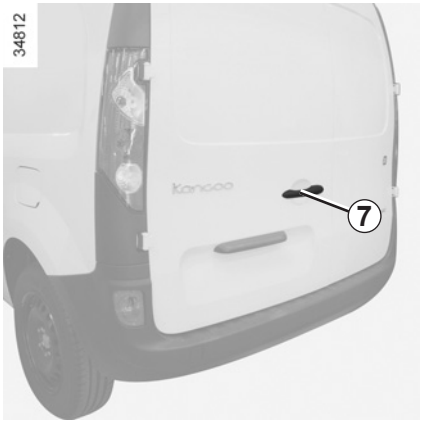

Rear hinged doors

Opening from the outside

Unlock the door and pull handle ***7***. For information on unlocking the doors, refer to the information on the “Key, radio frequency remote control: use” in Section 1.

Do not leave the hinged rear doors open in case of strong winds. Risk of injury.

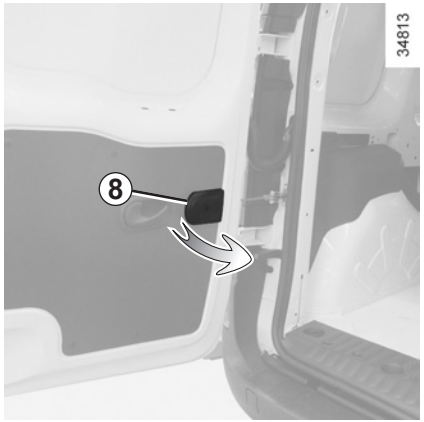

Opening the doors to the maximum position

For each door, pull handle ***8*** to release the door check strap. Open the door as far as possible.

Closing manually from the outside

First close the small door and then close the large door.

Position each door so that it is almost closed and then slam shut.

If the vehicle is parked on the hard shoulder with tailgate open, the rear lights may be obscured. You should make other road-users aware of your vehicle by using a warning triangle or other equipment specified by the road traffic regulations of the country concerned.

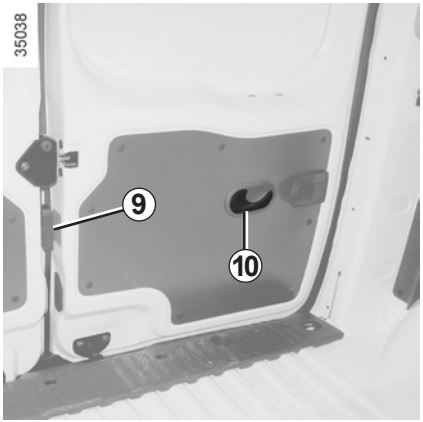

Rear hinged doors (continued)

Opening from the inside
(depending on vehicle)

Pull handle ***10*** and open the door. Pull lever ***9*** to open the small door.

Closing from the inside

First close the small door and then close the large door.

Position each door so that it is almost closed and then slam shut.

Driver's responsibility when parking or stopping the vehicle

Never leave an animal, child or adult who is not self-sufficient alone on your vehicle, even for a short time.

They may pose a risk to themselves or to others by starting the engine, activating equipment such as the electric windows or by locking the doors.

Also, in hot and/or sunny weather, please remember that the temperature inside the passenger compartment increases very quickly.

RISK OF DEATH OR SERIOUS INJURY.

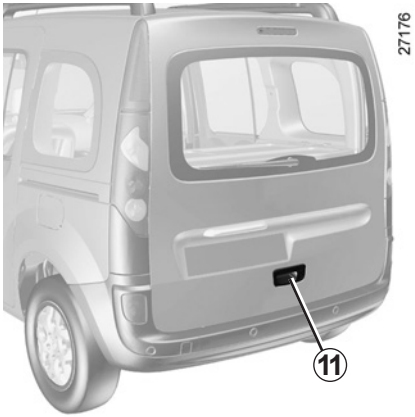

Tailgate

Opening

Unlock the door and pull handle ***11***. For information on unlocking the doors, refer to the information on the “Key, radio frequency remote control: use” in Section 1.

For your safety, check that all the vehicle’s doors are properly closed before starting the engine.

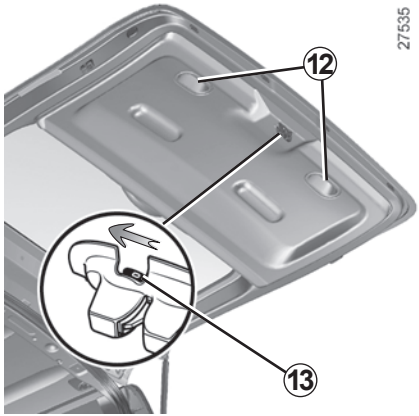

Closing

Lower the tailgate using interior handles ***12***.

When the tailgate reaches shoulder height, gently push it shut.

Opening manually from the inside

If it is not possible to unlock the tailgate, it can be unlocked manually from the inside.

Insert a pencil or similar object into cavity ***13***, slide the assembly as shown in the diagram and push the tailgate to open it.

Control for locking and unlocking from the inside

This enables all the doors to be locked simultaneously.
Lock or unlock the doors by pressing switch ***1***.
If a door or the tailgate is open or not closed properly, the doors and tailgate lock/unlock quickly.

Never leave your vehicle with the key inside the vehicle.

Locking the opening elements without the remote control

With the engine and ignition off, the sliding side doors closed and a front door open, press switch ***1*** for more than five seconds.
Make sure you have your key with you before you leave your vehicle.
When the door is closed, all the doors and tailgate will be locked.
Unlocking from outside the vehicle will only be possible with the key for the driver's door.

Doors and tailgate status indicator light

With the ignition on, the warning light integrated in switch ***1*** informs you of the locking status of the opening elements:
– indicator light on, the doors and tailgate are locked;
– indicator light off, at least one door is unlocked.

When you lock the doors, the indicator light remains lit and then goes out.

If you decide to keep the doors locked when you are driving, remember that it may be more difficult for those assisting you to gain access to the passenger compartment in the event of an emergency.

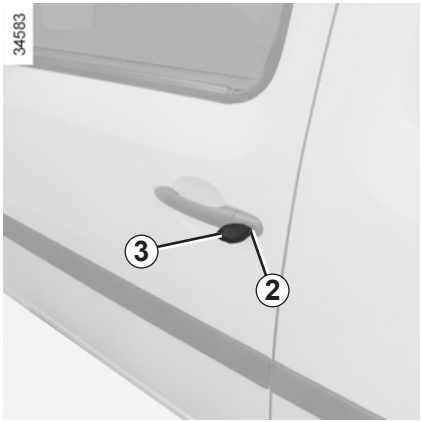

Manual control

Using the key
Lock or unlock the driver's door by inserting the key ***3*** fully into lock ***2***, and turning the key.
For more information on the remote controls, refer to the information on the "Key, radio frequency remote control: use" in Section 1.

Locking the doors manually
Turn screw ***4*** with the door open (using the end of the key) and close the door. This means that the doors are then locked from the outside.

The doors may then only be opened from inside the vehicle or with the key for the front doors.

Sliding side door (fuel filler cap side)

To prevent the door striking the fuel filler nozzle, a mechanical system locks it when the fuel filler flap is open.

When the fuel tank has been filled, replace the cap in its housing and close the flap. The door can now be used.

AUTOMATIC LOCKING WHEN DRIVING (RAID)

You must first decide if you want to activate this function.

To activate

With the engine running, press and hold button ***1*** for approximately 5 seconds, until you hear a beep. The indicator light built into the control comes on when the doors are locked.

To deactivate

With the engine running, press and hold button ***1*** for approximately 5 seconds, until you hear a beep.

Operating principle

When the engine is started, the system automatically locks the doors when the vehicle reaches a speed of approximately 4 mph (7 km/h).

Operating faults

If you notice an operating fault (automatic locking impossible), first check that all doors are correctly locked. If they are correctly locked and the fault is still present, contact an approved Dealer.

Also make sure that locking has not been inadvertently deactivated.

If necessary, refer to the activation procedure.

If you decide to keep the doors locked when you are driving, remember that it may be more difficult for those assisting you to gain access to the passenger compartment in the event of an emergency.

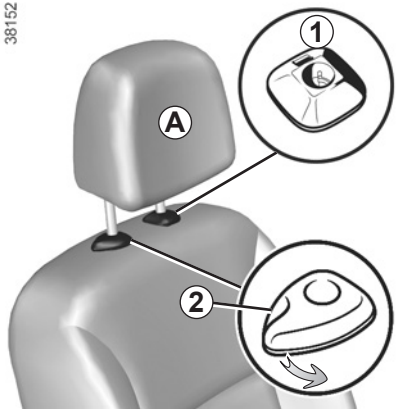

Headrest *A*

To raise the headrest

Pull it upwards to the required height.

To lower the headrest

Pull the tab ***2*** forwards, gently lift the headrest to unlock it and guide it down to the required height.

To remove the headrest

Raise it to its highest position. Press button ***1*** and lift the headrest to release it.

To refit the headrest

First, check that the headrest rods are clean and correctly aligned.

Pull the tab ***2*** forwards.

Insert the headrest rods in the holes, with the notches facing forwards (tilt the seat backwards if necessary).

Guide the headrest down to the desired height.

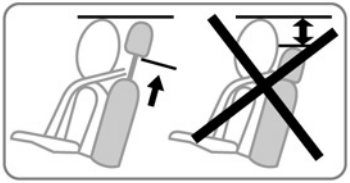

The headrest is an important safety component: ensure that it is in place and in the correct position. The distance between your head and the headrest should be as small as possible. The top of your head should be in line with the top of the headrest.

27323

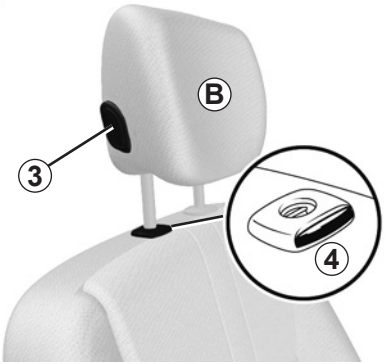

Headrest *B*

To raise the headrest

Pull it upwards to the required height.

To lower the headrest

Press button ***3*** and guide the headrest down to the desired height.

To remove the headrest

Raise it to its highest position. Press button ***4*** and lift the headrest to release it.
Note: when the headrest is removed, take care not to change the positions of the rods.

To refit the headrest

If the setting of the rods has been altered, pull them fully upwards. Take care to ensure they are clean and correctly aligned and, if there are any problems, check that the notches are facing forwards.
Insert the headrest rods into the holes (tilt the seatback backwards if necessary).
Lower the headrest until it locks, press button ***3*** and lower the headrest as far as possible.

26342

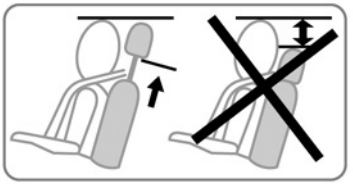

The headrest is an important safety component: ensure that it is in place and in the correct position. The distance between your head and the headrest should be as small as possible. The top of your head should be in line with the top of the headrest.

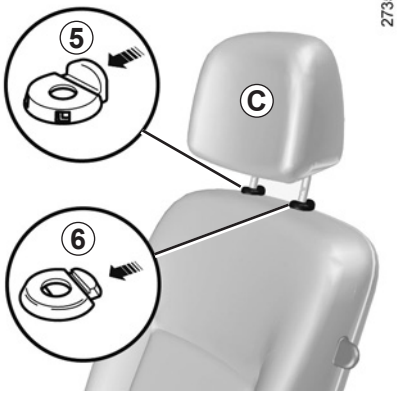

27357

Headrest *C*

To raise the headrest

Pull it upwards to the required height.

To lower the headrest

Press tab ***5*** and guide the headrest down to the desired height.

To remove the headrest

Raise it to its highest position. Press tabs ***5*** and ***6*** then lift the headrest to release it.

Note: when the headrest is removed, take care not to change the positions of the rods.

To refit the headrest

Press tab ***5***.

Insert the headrest rods in the holes with the notches facing forward, and guide the headrest down to the required height.

26342

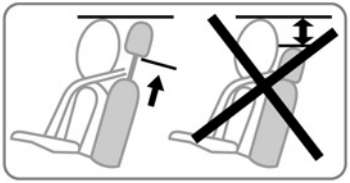

The headrest is an important safety component: ensure that it is in place and in the correct position. The distance between your head and the headrest should be as small as possible. The top of your head should be in line with the top of the headrest.

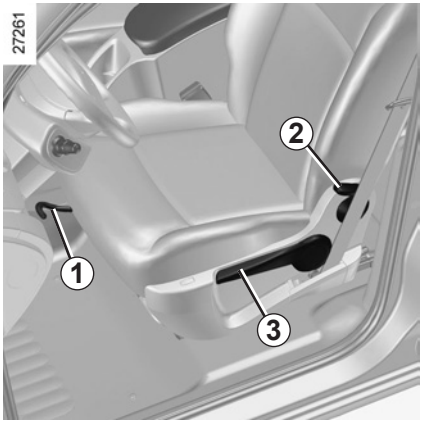

To move forwards or backwards

Depending on the seat, lift bar ***1*** or handle ***4*** to release it. Release the handle at the desired position and make sure that it is locked.

Adjusting the height of the driver's seat

Move lever ***3*** as many times as necessary:

– upwards to raise the seat,

– downwards to lower the seat.

To tilt the seatback

Depending on the seat, lower or lift lever ***2*** and tilt the seatback until it reaches the required position.

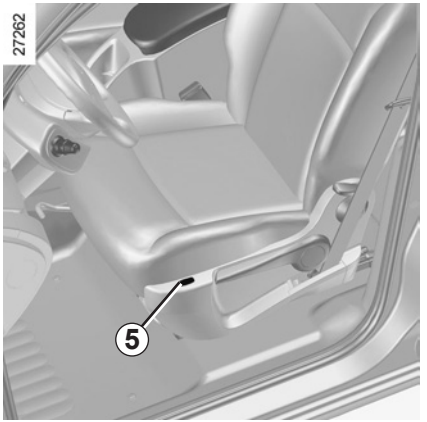

Heated seats

With the engine running, activate switch ***5***; a warning light comes on.

For safety reasons, carry out any adjustments when the vehicle is not being driven.

We would advise you not to recline the seatbacks too far to ensure that the effectiveness of the seat belts is not reduced.

Make sure that the seatbacks are correctly locked in place.

Nothing should be placed on the floor (area in front of driver) as such objects may slide under the pedal during braking manoeuvres, thus obstructing its use.

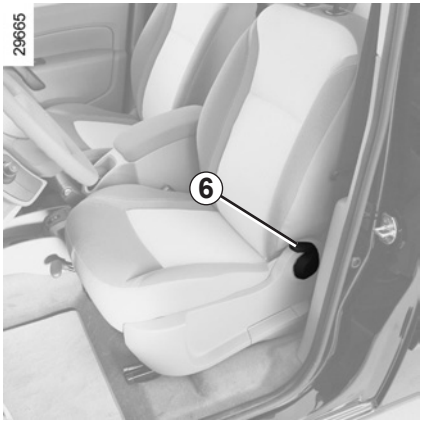

Front seats

Operating faults
(depending on vehicle)

If the sliding side door does not work, lower handle ***6***, hold it while the seat-back tilts and slide the seat forwards.

To place the seat into the comfort position, slide it rearwards.
Adjust the seat and make sure that it is correctly locked.

For safety reasons, carry out any adjustments when the vehicle is not being driven.

To avoid all risk of injury, ensure that nobody is in the proximity of the moving parts. When moving the seat, make sure that nothing interferes with the moving parts and their locking.

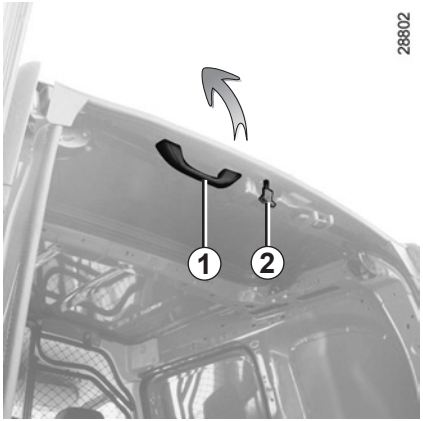

To open:

– Unlock the control ***2***, the roof flap lifts automatically (ensure that nothing stops the flap from opening. In this case, use the handle ***1*** to guide it open);

– when the roof flap is open, it must be locked by pushing it towards the front of the vehicle until the control ***2*** locks.

Important: It is prohibited to drive with the roof flap open and unlocked.

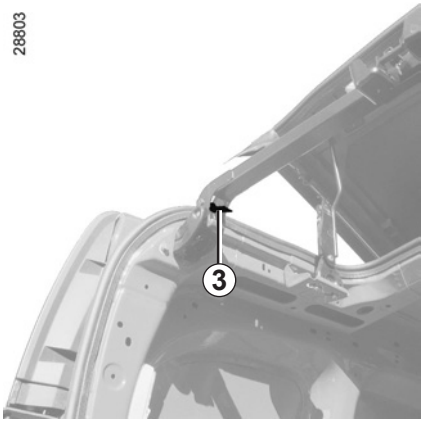

Transverse bar

When loading bulky objects, the transverse bar may be moved:

– Press the handle ***3***;

– lift the bar all the way to the door pillar;

– lock the bar after loading.

Note: when driving with the roof flap open, you may hear air noises. To reduce these, open one of the side windows slightly.

Driving with the roof flap open may be unpleasant for passengers because exhaust gas may enter the passenger compartment. This use is solely **for short distances**, whilst **transporting bulky objects** without having to open the rear doors. In this case, close the other windows and operate **the ventilation system at the half or fully open setting**, as this will help to prevent exhaust gas from entering the passenger compartment.

28805

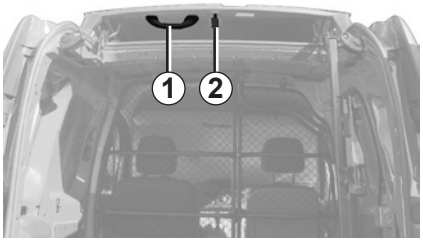

To close:

– Unlock the control ***2***, the roof flap automatically opens halfway;

– pull the handle ***1*** and lock the roof flap in the closed position.

Before starting, always reposition the transverse bar and ensure it is correctly locked.

The rear hinged doors can only be closed with the bar locked.

Remember that the overall vehicle dimensions may change when you are transporting bulky objects.

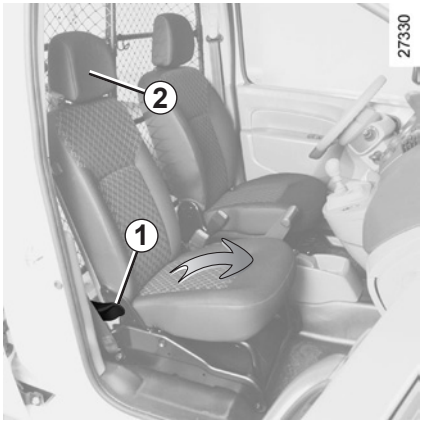

To rotate the partition

– Unlock the seat base by moving handle ***1*** downwards;

– lift the front passenger seat base vertically (arrow);

– lower headrest ***2*** to its lowest setting;

– unlock the seatback by moving handle ***1*** downwards again and position the seatback horizontally. To make the manoeuvre easier, rotate the headrest ***2***;

– unlock the swivelling section by lifting catch ***3***;

– reposition the seat base, proceeding in reverse order.

When moving the swivelling partition, ensure the seat belt is not damaged. Hold it aside when you rotate the partition.

– Pivot the moving section 90 degrees, lock it at point ***5*** and lower catch ***3***.

Note: before refitting the swivelling section in its original position, check that locking point ***4*** is clean.

Maximum weight on the seat in table position is 80 kg. The weight must be evenly distributed.

The swivelling section must always be locked when the vehicle is driven. Risk of injury.

Always wear your seat belt when travelling in your vehicle. You must also comply with the legislation of the particular country you are in.

Make sure that the rear bench seat is securely locked in position so that the rear seat belts will operate efficiently. Refer to the information on the “Rear bench seat: functions” in Section 3.

Seat belts which are incorrectly adjusted or twisted may cause injuries in the event of an accident.

Use one seat belt per person, whether child or adult.

Even pregnant women should wear a seat belt. In this case, ensure that the lap belt is not exerting too much pressure on the abdomen, but do not allow any slack.

Before starting, first adjust your driving position, then ask all occupants to adjust their seat belts to ensure optimum protection.

Adjusting your driving position

- **Sit well back in your seat** (having first removed your coat or jacket). This is essential to ensure your back is positioned correctly;
- **Adjust the distance between the seat and the pedals.** Your seat should be as far back as possible while still allowing you to fully depress the pedals. The seatback should be adjusted so that your arms are slightly bent when you hold the steering wheel;
- **adjust the position of your headrest.** For maximum safety, your head must be as close as possible to the headrest;
- **adjust the height of the seat.** This adjustment allows you to select the seat position which offers you the best possible view;
- **adjust the position of the steering wheel.**

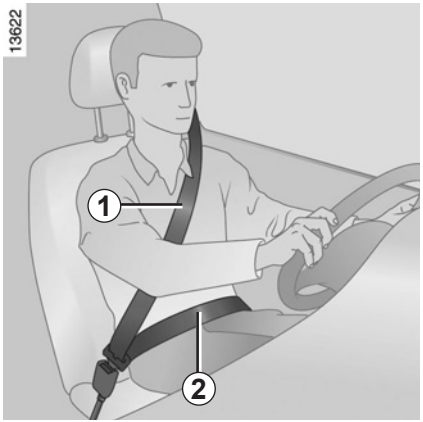

Adjusting the seat belts

Sit with your back firmly against the seatback.

The shoulder strap ***1*** should be as close as possible to the base of the neck but not on it.

The lap belt ***2*** should be worn flat over the thighs and against the pelvis.

The seat belt must be worn as close to the body as possible. E.g.: avoid wearing heavy clothing or keeping bulky objects under the belts, etc.

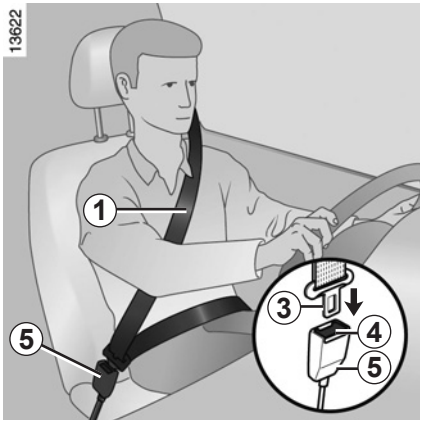

Locking

Unwind the belt **slowly and smoothly** and ensure that buckle ***3*** locks into catch ***5*** (check that it is locked by pulling on buckle ***3***).

If the belt jams, allow it to return slightly before attempting to unwind it again.

If your seat belt is completely jammed, pull slowly, but firmly so that just over 3 cm unwinds. Allow it to return slightly before attempting to unwind it again.

If there is still a problem, contact an approved dealer.

Front seat belt reminder warning light

It remains on when the engine is started if your seat belt is not fastened. When the vehicle reaches a speed of 12 mph (20 km/h), the warning light flashes and a buzzer sounds. Then, the beep sounds at a low volume for 30 seconds, then at a high volume for 90 seconds.

Unfastening

Press button ***4*** and the seat belt will be rewound by the inertia reel. Guide the belt.

NB: an object placed on the passenger seat base may activate the warning light in some cases.

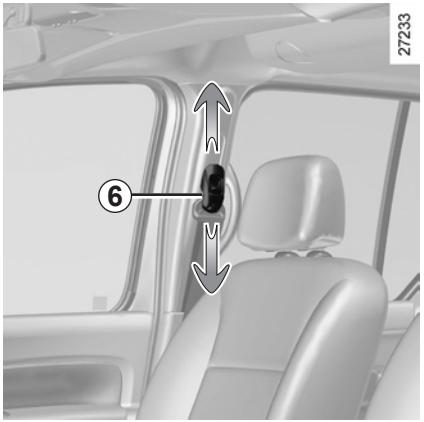

Adjusting the front seat belt height

Press button ***6*** to adjust the seat belt height so that the shoulder strap ***1*** is worn as shown previously:

– to lower the seat belt, press button ***6*** and lower the seat belt at the same time;

– to raise the seat belt, press button ***6*** and lift the seat belt to the required position.

Make sure that the seat belt is locked in position correctly after you have adjusted it.

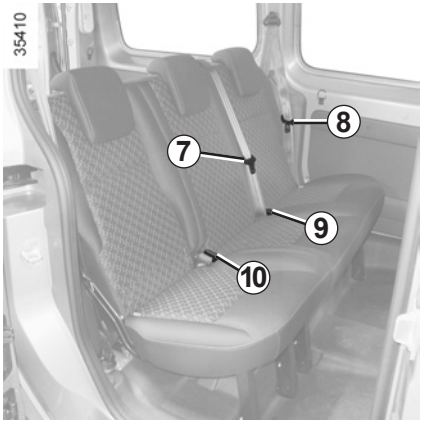

Rear centre belt

Unwind the belt slowly and ensure that the buckle ***7*** locks into catch ***10***.

Make sure that the rear bench seat is securely locked in position so that the rear seat belts will operate efficiently. Refer to the information on the “Rear bench seat: functions” in Section 3.

Rear side seat belts

Unwind the belt **slowly and smoothly** and ensure that buckle ***8*** locks into catch ***9*** (check that it is locked by pulling on buckle ***8***).

The belts are adjusted in the same way as the front seat belts.

– No modification may be made to the component parts of the originally fitted restraint system: belts, seats and their mountings. For special operations (e.g. fitting child seats), contact an authorised dealer.

– Do not use devices which allow any slack in the belts (e.g. clothes pegs, clips, etc.): a seat belt which is worn too loosely may cause injury in the event of an accident.

– Never wear the shoulder strap under your arm or behind your back.

– Never use the same belt for more than one person and never hold a baby or child on your lap with your seat belt around them.

– The belt should never be twisted.

– Following an accident, have the seat belts checked and replaced if necessary. Always replace your seat belts as soon as they show any signs of wear.

– Make sure that the buckle is inserted into the appropriate catch.

– When refitting the rear bench seat, take care that the seat belts are correctly positioned so that they can be used properly.

– Ensure that no objects are placed in the area around the seat belt catch as they could prevent it from being properly secured.

– Make sure the seat belt catch is properly positioned (it should not be hidden away, crushed or flattened by people or objects).

METHODS OF RESTRAINT IN ADDITION TO THE FRONT SEAT BELTS (1/3)

Depending on the vehicle, they will consist of:

- **seat belt pretensioners;**
- **front airbags *1* for driver and front passenger.**

These systems are designed to act independently or together when the vehicle is subjected to a frontal impact.

Depending on the severity of the impact, the system can trigger:

- seat belt locking ***2***;
- the seat belt pretensioner (which engages to correct seat belt slack);
- the front air bag.

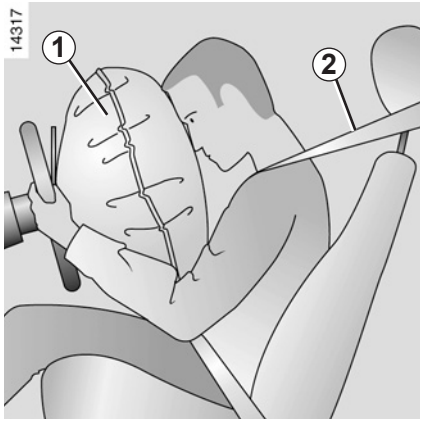

Pretensioners

The pretensioners hold the seat belt against the body, holding the occupant more securely against the seat, thus increasing the seat belt's efficiency.

With the ignition on, following a significant frontal impact and depending on the severity of the impact, the system may trigger the seat belt pretensioner which instantly retracts the seat belt.

- Have the entire restraint system checked following an accident.
- No operation whatsoever is permitted on any part of the system (pretensioners, air bags, computers, wiring) and the system components must not be reused on any other vehicle, even if identical.
- To avoid incorrect triggering of the system which may cause injury, only qualified personnel from an approved dealer may work on the pretensioner and air bag system.
- The electric trigger system may only be tested by a specially trained technician using special equipment.
- When the vehicle is scrapped, contact an approved dealer for disposal of the pretensioner and air bag gas generators.

Airbag for driver and front passenger

It is fitted to the front seats on the driver's side and, depending on the vehicle, on the passenger's side as well.

Depending on the vehicle, the presence of this equipment is indicated by the word "airbag" on the steering wheel and dashboard (airbag zone ***A***) and a symbol on the lower section of the windscreen.

Each airbag system consists of:

– an air bag and gas generator fitted on the steering wheel for the driver and in the dashboard for the front passenger;

– an electronic unit for system monitoring which controls the gas generator electrical trigger system;

– a single indicator light on the instrument panel;

– remote sensors.

Operation

This system is only operational when the ignition is switched on.

In a severe **frontal** impact, the air bags inflate rapidly, cushioning the impact of the driver's head and chest against the steering wheel and of the front passenger against the dashboard. The air bags then deflate immediately so that the passengers are not in any way hindered from leaving the vehicle.

Load limiter

Above a certain severity of impact, this mechanism is used to limit the force of the belt against the body so that it is at an acceptable level.

The air bag system uses pyrotechnic principles. This explains why, when the air bag inflates, it will generate heat, produce smoke (this does not mean that a fire is about to start) and make a noise upon detonation. In a situation where an air bag is required, it will inflate immediately and this may cause some minor, superficial grazing to the skin or other problems.

METHODS OF RESTRAINT IN ADDITION TO THE FRONT SEAT BELTS (3/3)

All of the warnings below are given so that the air bag is not obstructed in any way when it is inflated and also to prevent the risk of serious injuries caused by items which may be dislodged when the air bag inflates.

Warnings concerning the driver's air bag

– Do not modify the steering wheel or the steering wheel boss.

– Do not cover the steering wheel boss under any circumstances.

– Do not attach any objects (badge, logo, clock, telephone support, etc.) to the steering wheel boss.

– The steering wheel must not be removed (except by qualified personnel from our Network).

– Do not sit too close to the steering wheel when driving: sit with your arms slightly bent (see Section 1 "Adjusting your driving position"). This will allow sufficient space for the airbag to deploy correctly and be fully effective.

Warnings concerning the passenger air bag

– Do not attach or glue any objects (badge, logo, clock, telephone cradle, etc.) to the dashboard in the airbag zone.

– Do not place anything between the dashboard and the passenger (animal, umbrella, walking stick, parcels, etc.).

– The passenger must not put his or her feet on the dashboard or seat as there is a risk that serious injuries may be sustained. As a general rule, keep all body parts (knees, hands, head, etc.) away from the dashboard.

– The devices in addition to the front passenger seat belt should be reactivated as soon as a child seat is removed, to ensure the protection of the passenger in the event of an impact.

A REAR-FACING CHILD SEAT MUST NOT BE FITTED TO THE FRONT PASSENGER SEAT UNLESS THE ADDITIONAL RESTRAINT SYSTEMS, I.E. THE PASSENGER AIR BAG, ARE DEACTIVATED.

(Refer to the information on "Child safety: front passenger airbag deactivation/activation" Section 1).

Side air bags
(depending on vehicle)

This air bag may be fitted to each of the front seats and is activated at the sides of the seats (door side) to protect the occupants in the event of a severe side impact.

Curtain air bags
(depending on vehicle)

These air bags may be fitted along the top of each side of the vehicle and are triggered along the front and rear side windows to protect the passengers in the event of a severe side impact.

Depending on the vehicle, a marking on the windscreen informs you of the presence of additional means of restraint (airbags, pretensioners, etc.) in the passenger compartment.

Warnings concerning the side air bag

– **Fitting seat covers:** seats equipped with an airbag require covers specifically designed for your vehicle. Contact an authorised dealer to find out if these covers are available. The use of any covers other than those designed for your vehicle (including those designed for another vehicle) may affect the operation of the airbags and reduce your protection.

– Do not place any accessories, objects or even pets between the seatback, the door and the internal fittings. Do not cover the seatback with any items such as clothes or accessories. This may prevent the air bag from operating correctly or cause injury when the air bag is deployed.

– No work or modification whatsoever may be carried out on the seat or internal fittings, except by qualified personnel from an approved Dealer.

– These airbags operate through slits in the front seatbacks (door side): Never place any objects here.

ADDITIONAL METHODS OF RESTRAINT

All of the warnings below are given so that the air bag is not obstructed in any way when it is inflated and also to prevent the risk of serious injuries caused by items which may be dislodged when the air bag inflates.

The air bag is designed to complement the action of the seat belt. Both the air bags and seat belts are integral parts of the same protection system. It is therefore essential to wear seat belts at all times. If seat belts are not worn, the occupants are exposed to the risk of serious injury in the event of an accident. It may also increase the risk of minor superficial injuries occurring when the air bag is deployed, although such minor injuries are always possible with air bags.

If the vehicle should overturn or suffer a rear impact, however severe, the pre-tensioners and air bags are not always triggered. Impacts to the underside of the vehicle, eg. from pavements, potholes or stones, can all trigger these systems.

– No work or modification **whatsoever** may be carried out on any part of the air bag system (air bags, pretensioners, computer, wiring harness, etc.), except by qualified personnel from an approved Dealer.

– To ensure that the system is in good working order and to avoid accidental trigging of the system which may cause injury, only qualified Network personnel may work on the air bag system.

– As a safety precaution, have the airbag system checked if your vehicle has been involved in an accident, or is stolen or broken into.

– When selling or lending the vehicle, inform the user of these points and hand over this handbook with the vehicle.

– When scrapping your vehicle, contact your approved Dealer for disposal of the gas generator(s).

Operating faults

This warning light ***1*** will light up on the instrument panel when the ignition is switched on and then go out after a few seconds.

If it does not come on when the ignition is switched on, or if it comes on when the engine is running, there is a fault with the system (airbags, pretensioners, etc.) in the front and/or rear seats.

Contact your approved dealer as soon as possible. Your protection will be reduced until this fault is rectified.

Carrying children

Children, and adults, must be correctly seated and strapped in for all journeys. The children being carried in your vehicle are your responsibility.

A child is not a miniature adult. Children are at risk of specific injuries as their muscles and bones have not yet finished growing. The seat belt alone would not provide suitable protection. Use an approved child seat and ensure you use it correctly.

To prevent the doors being opened, use the “Child safety” device (refer to the information on “Opening and closing the doors” in Section 1).

A collision at 30 mph (50 km/h) is the same as falling a distance of 10 metres.
Transporting a child without a restraint is the equivalent of allowing him or her to play on a fourth-floor balcony without railings.
Never travel with a child held in your arms. In the event of an accident, you will not be able to keep hold of the child, even if you yourself are wearing a seat belt.
If your vehicle has been involved in a road accident, replace the child seat and have the seat belts and ISOFIX anchorage points checked.

Driver’s responsibility when parking or stopping the vehicle

Never leave an animal, child or adult who is not self-sufficient alone on your vehicle, even for a short time.

They may pose a risk to themselves or to others by starting the engine, activating equipment such as the electric windows or by locking the doors.

Also, in hot and/or sunny weather, please remember that the temperature inside the passenger compartment increases very quickly.

RISK OF DEATH OR SERIOUS INJURY.

Using a child seat

The level of protection offered by the child seat depends on its ability to restrain your child and on its installation. Incorrect installation compromises the protection it offers the child in the event of harsh braking or an impact.

Before purchasing a child seat, check that it complies with the regulations for the country you are in and that it can be fitted in your vehicle. Consult an approved dealer to find out which seats are recommended for your vehicle.

Before fitting a child seat, read the manual and respect its instructions. If you experience any difficulties during installation, contact the manufacturer of the equipment. Keep the instructions with the seat.

Set a good example by always fastening your seat belt and teaching your child:
- to strap themselves in correctly.
- to always get in and out of the car at the kerb, away from busy traffic.

Do not use a second-hand child seat or one without an instruction manual.

Check that there are no objects in the vicinity of the child seat which could impede its operation.

Never leave a child unattended in the vehicle.

Check that your child is always strapped in and that the belt or safety harness used is correctly set and adjusted. Avoid wearing bulky clothing which could cause the belts to slacken.

Never let your child put their head or arms out of the window.

Check that the child is in the correct position for the entire journey, especially if asleep.

Rear-facing child seats
A baby's head is, proportionally, heavier than that of an adult and its neck is very fragile. Transport the child in this position for as long as possible (until the age of 2 at the very least). It supports both the head and the neck.
Choose a bucket type seat for best side protection and change it as soon as the child's head is higher than the shell.

Forward-facing child seats
The child's head and abdomen need to be protected as a priority. A forward-facing child seat which is firmly attached to the vehicle will reduce the risk of impact to the head. Ensure your child travels in a forward-facing seat with a harness or buckle for as long as their size permits. Choose a bucket type seat for optimum side protection.w

Booster cushions
From 15 kg or 4 years, the child can travel using a booster seat, which will enable the seat belt to be adapted to suit his/her size and shape. The booster seat cushion must be fitted with guides to position the seat belt on the child's thighs rather than the stomach. It is recommended that you use a seat-back fitted with a belt strap guide which can be adjusted in terms of height to position the seat belt in the centre of the shoulder. It must never rest on the neck or on the arm.
Choose a bucket type seat for optimum side protection.

CHILD SAFETY: choosing a child/baby seat mounting (1/2)

The are two ways of attaching child seats: via the seat belt or using the ISOFIX system.

Attachment via the seat belt

The seat belt must be adjusted to ensure that it is effective in the event of harsh braking or an impact.

Ensure that the strap paths indicated by the child seat manufacturer are respected.

Always check that the seat belt is correctly fastened by pulling it up, then pulling it out fully whilst pressing on the child seat.

Check that the seat is correctly held by moving it from side to side and back to front: the seat should remain firmly fixed.

Check that the child seat has not been installed at an angle and that it is not resting against a window.

Do not use the child seat if it may unfasten the seat belt restraining it: the base of the seat must not rest on the buckle and/or catch of the seat belt.

The seat belt must never be twisted or the tension relieved. Never pass the shoulder strap under the arm or behind the back.
Check that the seat belt has not been damaged by sharp edges.
If the seat belt does not operate normally, it will not protect the child. Consult an approved Dealer. Do not use this seat until the seat belt has been repaired.

No modifications may be made to the component parts of the restraint system (belts, ISOFIX and seats and their mountings) originally fitted.

Attachment with the ISOFIX system

Authorised ISOFIX child seats are approved in accordance with regulation ECE-R44 in one of the three following scenarios:
– ISOFIX universal 3 point forward-facing seat;
– ISOFIX semi-universal 2 point seat;
– specific.

For the latter two, check that your child seat can be installed by consulting the list of compatible vehicles.

Attach the child seat with the ISOFIX locks, if these are provided. The ISOFIX system allows quick, easy, safe fitting.

The ISOFIX system consists of 2 rings and, in some cases, a third ring.

Before using an ISOFIX child seat that you purchased for another vehicle, check that its installation is authorised. Consult the list of vehicles which can be fitted with the seat with the equipment manufacturer.

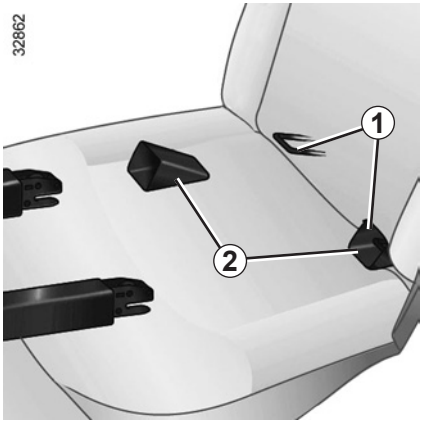

The two rings ***1*** are located between the seatback and the seat base, behind the zip fasteners, and are identified by a marking.

To ensure your child seat can be easily fitted and locked on rings ***1***, use access guides ***2*** on the child seat.

The third ring is used to attach the upper strap on some child seats.

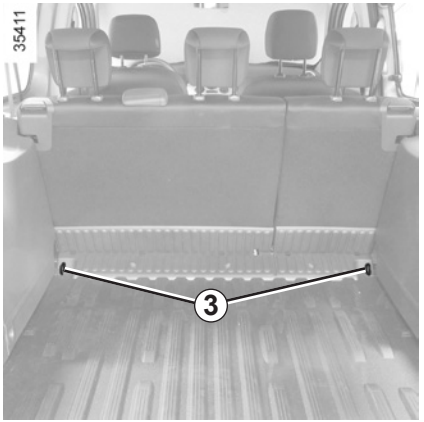

Depending on the vehicle, pass the strap between wheel arch liner ***4*** and the underside of upper partition ***5***.

From the luggage compartment, attach the strap hook to ring ***3*** on the corresponding side. Check that the bench seatback is correctly locked.

Pull the belt so that the back of the child seat comes into contact with the back of the vehicle seat.

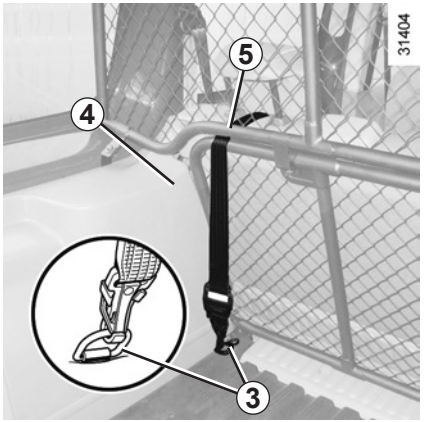

The anchoring points (rings) in luggage compartment ***3*** cannot be used if they are already being used to mount two of the following three components: luggage net, load in the luggage compartment or child seat.

The ISOFIX anchorage points have been exclusively designed for child seats with the ISOFIX system. Never fit a different type of child seat, seat belt or other objects to these anchorage points.

Check that nothing is obstructing the anchorage points.

If your vehicle has been involved in a road accident, have the ISOFIX anchorage points checked and replace your child seat.

Some seats are not suitable for fitting child seats. The diagrams on the following pages show you how to attach a child seat.

The types of child seats indicated may not be available. Before using a different child seat, check with the manufacturer that it can be fitted.

Fit the child seat in a rear seat wherever possible.

Check that when installing the child seat in the vehicle it is not at risk of coming loose from its base.

If you have to remove the headrest, check that it is correctly stored so that it does not come loose under harsh braking or impact.

Always attach the child seat to the vehicle even if it is not in use so that it does not come loose under harsh braking or impact.

In the front seat

The laws concerning children travelling in the front passenger seat differ in every country. Consult the legislation in force and follow the indications on the diagrams on the following pages.

Before fitting a child seat in this seat (if authorised):

– lower the seat belt as far as possible;
– move the seat as far back as possible;
– gently tilt the seatback away from vertical (approximately 25°);
– on equipped vehicles, raise the seat base as far as possible.

Do not change these settings after the child seat is installed.

RISK OF DEATH OR SERIOUS INJURY: before installing a child seat on this seat, check that the airbag has been deactivated (refer to “Child safety: front passenger airbag deactivation/activation” in Section 1).

In the rear seat

A carrycot can be installed across the vehicle and will take up at least two seats. Position the child with his or her feet nearest the door.

Move the front seat as far forward as possible to install a rear-facing child seat, then move back the seat in front as far as it will go, although without allowing it to come into contact with the child seat.

For the safety of the child in the forward-facing seat, do not move the seat in front back past the middle of the runner, do not tilt the seatback too far (maximum of 25°) and raise the seat as much as possible.

Check that the forward-facing child seat is resting against the back of the vehicle seat and that the headrest of the vehicle is not obstructing its use.

Child’s convertible headrest

If fitted to the vehicle, the child headrest and booster cushion can only be installed on the rear side seats.

For fitting and use, refer to the equipment instructions

2-seat version

Type of seat group (weight of the child)	Seats suitable for fitting a child seat Front passenger seat (1)	
	WITH PASSENGER AIR BAG (2)	WITHOUT PASSENGER AIR BAG
Group 0, 0+ (weight below 13 kg)	U	U
Group I (weight from 9 kg to 18 kg)	U	U
Groups II and III (weight from 15 kg to 36 kg)	U	U

Child seat attached using the belt

U Seat which allows a child seat with “Universal” approval to be attached by a seat belt.

Seat not suitable for fitting child seats.

Check the status of the front airbag before fitting a child seat or allowing a passenger to use the seat.

(1) Before fitting a child seat: position the vehicle seat as far back as possible.

(2) RISK OF DEATH OR SERIOUS INJURY: Before installing a child seat on the front passenger seat, check that the airbag has been deactivated (refer to “Child safety: front passenger airbag deactivation and activation” in Section 1).

5-seat version

Child seat attached using the belt

U Seat which allows a standardised "Universal" seat to be fitted using a seat belt;

UD Seat which **only** allows a **rear-facing** standardised "Universal" seat to be installed using a seat belt.

RISK OF DEATH OR SERIOUS INJURY: Before fitting a rear-facing child seat on the front passenger seat, check that the airbag has been deactivated (refer to the information on "Child safety: front passenger airbag deactivation/activation" in Section 1).

Using a child safety system which is not approved for this vehicle will not correctly protect the baby or child. They risk serious or even fatal injury.

Child seats attached using the ISOFIX **mounting**

Seat which allows an ISOFIX. child seat to be fitted.

Check the status of the air bag before fitting a child seat or allowing a passenger to use the seat.

Seat not suitable for fitting child seats.

The rear seats are fitted with an anchorage point which allows a forward-facing ISOFIX child seat with universal approval to be fitted. The anchorage points are located in the luggage compartment and are visible.

The size of the ISOFIX child seat is indicated by a letter:

– A, B and B1: for forward-facing seats in group 1 (9 to 18 kg);
– C: rear-facing seats in group 1 (9 to 18 kg);
– D and E: shell seat or rear-facing seats in group 0 or 0+ (less than 13 kg);
– F and G: carrycots in group 0 (less than 10 kg).

CHILD SAFETY: fitting a child seat (4/5)

The table below summarises the information already shown on the diagram on the previous page, to ensure the regulations in force are respected.

5-seat version Type of child seat	Weight of the child	Seat size ISOFIX	Front passenger seat (1) (2)	Rear side seats	Rear centre seat
Carrycot fitted across the vehicle Group 0	< 10 kg	F, G	X	U - IL (3)	U (3)
Shell seat/rear-facing seat Group 0, 0+ and 1	< to 13 kg and 9 to 18 kg	C, D, E	U - IL (6)	U - IL (4)	U (4)
Forward-facing seat Group 1	9 to 18 kg	A, B, B1	X	U - IUF - IL (5)	U (5)
Booster seat Group 2 and 3	15 to 25 kg and 22 to 36 kg		X	U (5)	U (5)

(1) RISK OF DEATH OR SERIOUS INJURY: Before fitting a rear-facing child seat on the front passenger seat, check that the airbag has been deactivated (refer to the information on “Child safety: front passenger airbag deactivation/activation” in Section 1).

CHILD SAFETY: fitting a child seat (5/5)

X = Seat not suitable for fitting child seats.
U = Seat which allows a child seat with “Universal” approval to be installed using a seat belt; check that it can be fitted.
IUF/IL = On equipped vehicles, seat which allows an approved “Universal/semi-universal” or “vehicle specific” child seat to be attached using the ISOFIX system; check that it can be fitted.

(2) Only a rear-facing child seat can be fitted in this seat: raise the seat to the maximum and position it as far back as possible, tilting the seatback slightly (approximately 25°).
(3) A carrycot is fitted crosswise and occupies at least two seats (the child’s feet are placed nearest the door).
(4) Move the front seat as far forward as possible to install a rear-facing child seat, then move back the seat in front as far as it will go, although without allowing it to come into contact with the child seat.
(5) Forward-facing child seat; position the seatback of the child seat in contact with the seatback of the vehicle seat. Adjust the headrest, or remove it if necessary. In addition, do not push the seat in front of the child further than halfway along its runners, or incline the seatback more than 25°.
(6) Depending on vehicle.

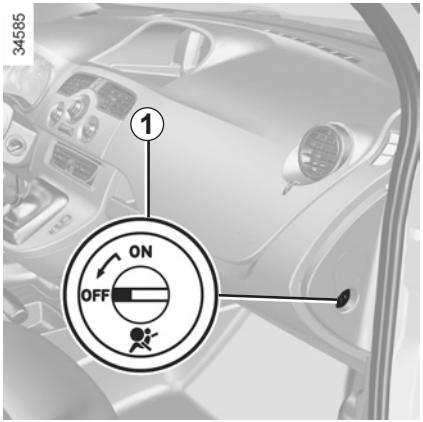

Deactivating the front passenger air bags
(on equipped vehicles)

You **must** deactivate the devices in addition to the front passenger seat belt before fitting a child seat in the front passenger seat.

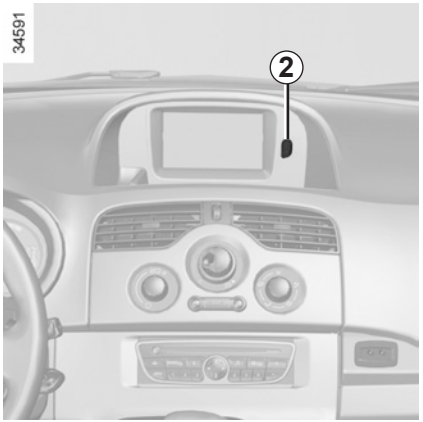

To deactivate the airbags: with the vehicle stopped and the ignition off, press and turn lock ***1*** to the **OFF** position.

With the ignition on, you **must** check that warning light ***2*** is lit on the central display and, depending on the vehicle, that the message “passenger airbag off” is displayed.

NB: on equipped vehicles, the side airbag is also deactivated.

This light remains permanently lit to let you know that you can fit a child seat.

DANGER

Since front passenger airbag triggering and the position of a rear-facing child seat are incompatible, **NEVER** use a restraining device for rear-facing children on a seat with an **ACTIVATED AIRBAG** in front of it. This provides a risk of **DEATH** or **SERIOUS INJURY** to the **CHILD**.

The passenger air bag must only be deactivated or activated **with the ignition off**.

If it is interfered with when the vehicle is being driven, indicator lights and will come on.

Switch the ignition off then on again to reset the air bag in accordance with the lock.

DANGER

Since front passenger airbag triggering and the position of a rear-facing child seat are incompatible, **NEVER** use a restraining device for rear-facing children on a seat with an **ACTIVATED AIRBAG** in front of it. This provides a risk of **DEATH** or **SERIOUS INJURY** to the **CHILD**.

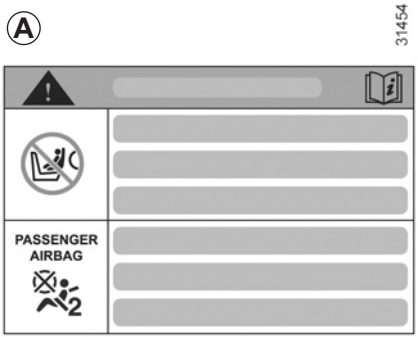

The markings on the dashboard and labels ***A*** on each side of the passenger sun visor ***3*** (for example, the labels shown above) will remind you of these instructions.

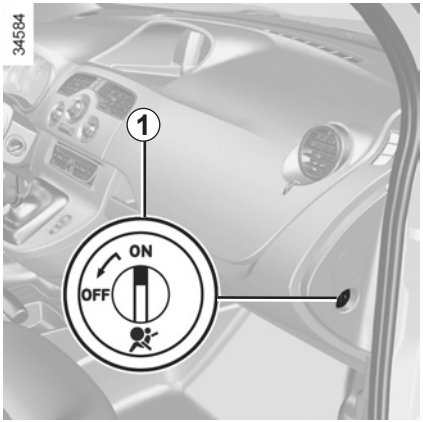

Activation of the front passenger air bag

You should reactivate the air bag as soon as you remove the child seat from the front passenger seat to ensure the protection of the front passenger in the event of an impact.

Reactivating the airbags: with the vehicle stopped and the ignition off, press and turn lock ***1*** to the **ON** position.
With the ignition on, you **must** check that the warning light ***2*** is off.

The front passenger seat belt additional restraint systems are activated.

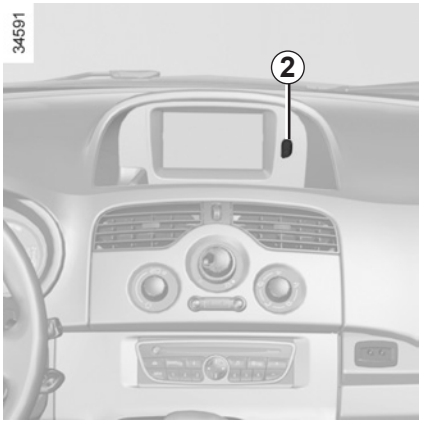

Operating faults

In the event that the front passenger air bag activation/deactivation system is faulty, child seats must not be fitted to the front seat.

Allowing any other passenger to sit in that seat is not recommended.

Contact your approved Dealer as soon as possible.

The passenger air bag must only be deactivated or activated **with the ignition off**.

If it is interfered with when the vehicle is being driven, indicator lights and will come on.

Switch the ignition off then on again to reset the air bag in accordance with the lock.

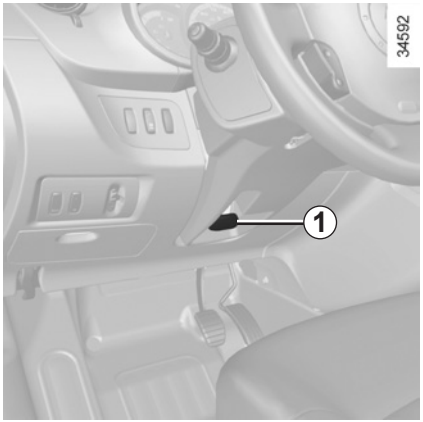

Steering wheel height adjustment

Pull lever ***1*** and move the steering wheel to the required position; push lever to lock the steering wheel.

Make sure that the steering wheel is correctly locked.

For safety reasons, only adjust the steering wheel when the vehicle is stationary.

Power-assisted steering

The variable power-assisted steering system is equipped with an electronic control system which alters the level of assistance to suit the vehicle speed.

Steering is made easier during parking manoeuvres (for added comfort) while the force needed to steer increases progressively as the speed rises (for enhanced safety at high speeds).

Never switch off the ignition when travelling downhill, and avoid doing so in normal driving (assistance is not provided).

Never leave the steering wheel on full lock when the vehicle is stationary.

With the engine switched off, or if there is a system fault, it is still possible to turn the steering wheel. The force required will be greater.

A noise may be heard when the steering wheel is moved quickly. This is normal.

DRIVING POSITION, LEFT-HAND DRIVE (1/2)

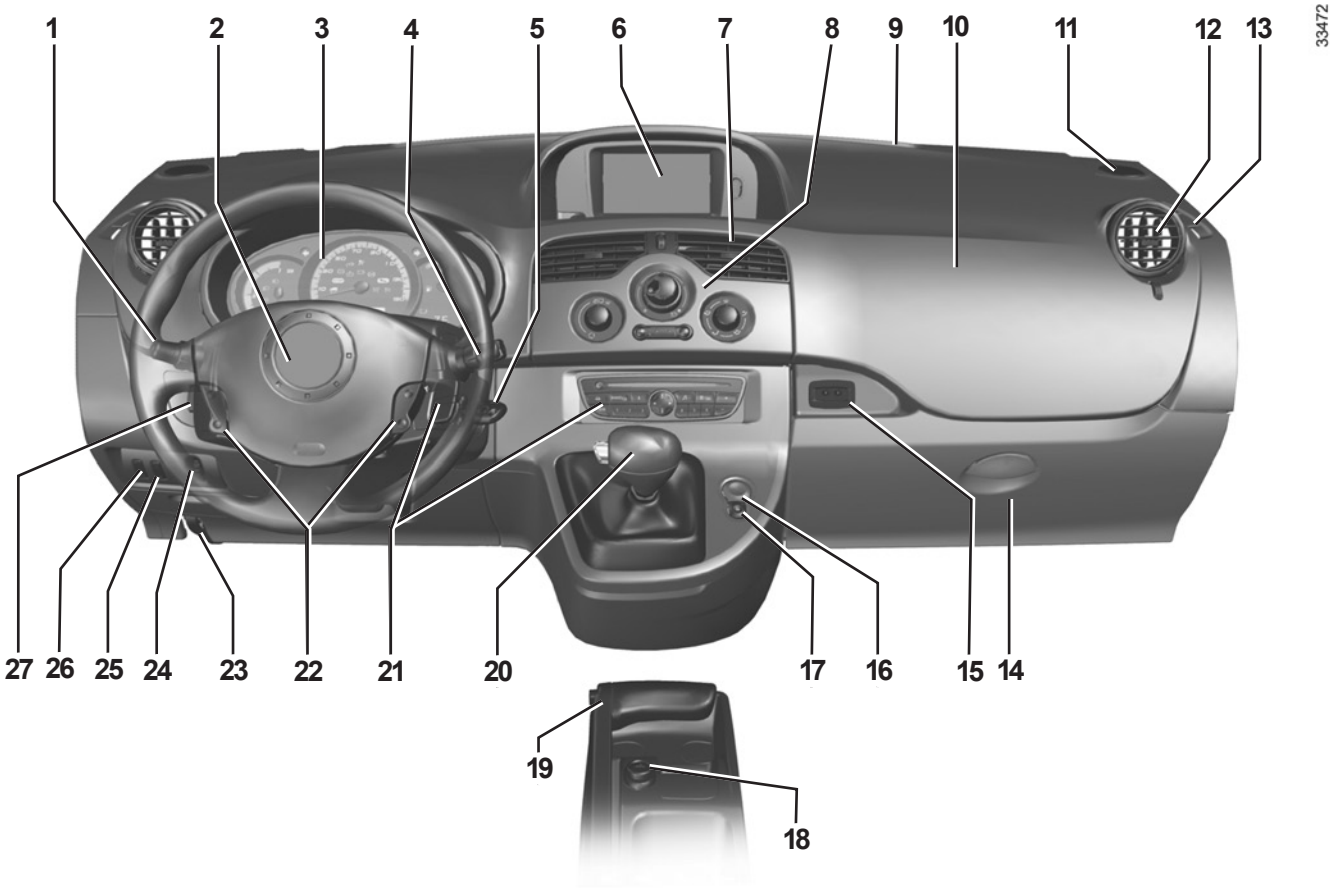

DRIVING POSITION, LEFT-HAND DRIVER (2/2)

The equipment fitted, described below, DEPENDS ON THE VERSION AND COUNTRY.

1 Stalk for:
- direction indicator lights;
- exterior lights;
- front fog lights;
- rear fog lights.

2 – Horn,
- location for driver's air bag.

3 Instrument panel.

4 Stalk for:
- windscreen wipers;
- windscreen washer;
- trip computer and warning system.

5 Ignition switch.

6 Central display:
- seat belt reminder warning light;
- airbag deactivation warning light;
- navigation;
- clock;
- exterior temperature.

7 Centre air vent.

8 Controls for ventilation, heating and de-icing.

9 Windscreen demister outlet.

10 Location for passenger air bag.

11 Speaker.

12 Side air vent.

13 Side window demister outlet.

14 Glove box.

15 Storage space or accessories socket.

16 Hazard warning lights switch.

17 Central door locking/unlocking switch.

18 Cigar lighter/12V socket.

19 Handbrake.

20 Gearstick

21 Remote control/location for radio, navigation system.

22 Cruise control/speed limiter controls.

23 Bonnet release control.

24 Headlight adjustment control.

25 Additional heating switch.

26 ECO mode switch.

27 Controls for:
- cruise control/speed limiter;
- parking distance;
- activation/deactivation of the horn.

DRIVING POSITION: RIGHT-HAND DRIVE (1/2)

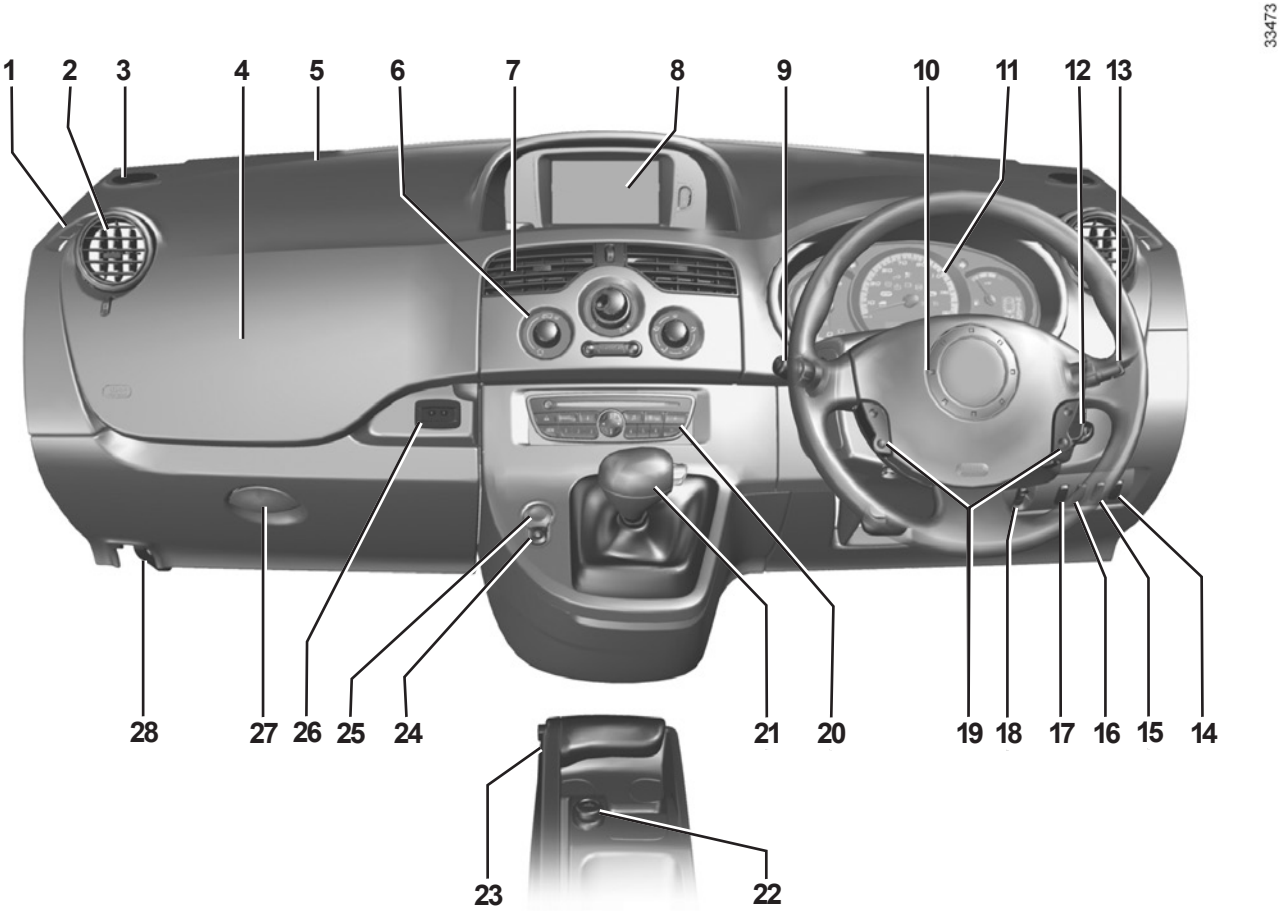

DRIVING POSITION: RIGHT-HAND DRIVE (2/2)

The equipment fitted, described below, DEPENDS ON THE VERSION AND COUNTRY.

1 Side window demister outlet.

2 Side air vent.

3 Speaker.

4 Location for passenger air bag.

5 Windscreen demister outlet.

6 Controls for ventilation, heating and de-icing.

7 Centre air vent.

8 Central display:
- seat belt reminder warning light;
- airbag deactivation warning light;
- navigation;
- clock;
- exterior temperature.

9 Stalk for:
- direction indicator lights,
- exterior lights;
- front fog lights;
- rear fog lights.

10 – Horn.
- Location for driver's air bag.

11 Instrument panel.

12 Ignition switch.

13 Stalk for:
- windscreen wipers;
- windscreen washer;
- trip computer and warning system.

14 Cruise control/speed limiter control.

15 Additional heating switch.

16 ECO mode switch.

17 Activation/deactivation control for the horn.

18 Headlight adjustment control.

19 Cruise control/speed limiter controls.

20 Location for radio, navigation system.

21 Gearstick

22 Cigarette lighter/12V socket.

23 Handbrake.

24 Door electric locking/unlocking switch.

25 Hazard warning lights switch.

26 Storage space or accessories socket.

27 Glovebox

28 Bonnet release control.

WARNING LIGHTS (1/3)

The presence and operation of the warning lights DEPEND ON THE EQUIPMENT AND COUNTRY.

Instrument panel *A*

In some cases, the appearance of a warning light is accompanied by a message.

Warning light STOP requires you to stop immediately, for your own safety, as soon as traffic conditions allow. Switch off the engine and do not restart it. Contact an approved Dealer.

Main beam headlight tell-tale light

Dipped beam headlight tell-tale

Front fog light tell-tale light

Rear fog light tell-tale

Left-hand direction indicator tell-tale light

Right-hand direction indicator tell-tale light

Vehicle ready for driving warning light

This comes on when the engine is started.

Charging cord plugged in warning light

This comes on when the charging cord is plugged into the vehicle.

12V battery charge warning light

If it comes on when you are driving, it indicates that the circuit is overcharged or has discharged. Stop and consult an approved Dealer as soon as possible.

The warning light means you should **drive very carefully** to an approved Dealer as soon as possible. If you fail to follow this recommendation, you risk damaging your vehicle.

If no lights or sounds are apparent, this indicates a fault in the instrument panel. This indicates that it is essential to stop immediately (as soon as traffic conditions allow). Ensure that the vehicle is correctly immobilised and contact an approved Dealer.

WARNING LIGHTS (2/3)

The presence and operation of the warning lights DEPEND ON THE EQUIPMENT AND COUNTRY.

STOP light

This lights up when the ignition is switched on and goes out as soon as the engine is started. It comes on with other warning lights and/or messages.

It requires you to stop immediately, for your own safety, as soon as traffic conditions allow. Switch off the engine and do not restart it.

Contact an approved Dealer.

Brake circuit fault warning light

If it comes on during braking and is accompanied by the STOP warning light and a beep, it indicates that the fluid level in the circuit is low or that there is a braking system fault. Stop as soon as traffic conditions allow and contact an approved Dealer.

Warning light

This lights up when the ignition is switched on and goes out as soon as the engine is started. It can light up in conjunction with other warning lights and/or messages on the instrument panel.

It means you should **drive very carefully** to an approved dealer as soon as possible. If you fail to follow this recommendation, you risk damaging your vehicle.

Cruise control and speed limiter indicator lights

Refer to the information on the “Speed limiter” and “Cruise control” in Section 2.

Air bag warning light

This comes on when the ignition is switched on and goes out after a few seconds. If it does not come on when the ignition is switched on or if it flashes, there is a fault in the system. Contact an approved Dealer as soon as possible.

Low fuel level or additional heating warning light

This comes on when the ignition is switched on and goes out after a few seconds. If it comes on while driving, accompanied by a beep, this means the imminent end of fuel power for the additional heating.

Seat belt reminder light

Depending on the vehicle, it is displayed on the instrument panel or on the central display of the dashboard. It remains on when the engine is started if your seat belt is not fastened. A beep sounds at a low volume for 30 seconds, then at a high volume for 90 seconds.

WARNING LIGHTS (3/3)

The presence and operation of the warning lights DEPEND ON THE EQUIPMENT AND COUNTRY.

Low traction battery level warning light

This comes on when the traction battery charge level has reached the reserve threshold. Please see the information on “Displays and indicators” in Section 1.

Electrotechnical system warning light

If this comes on while driving, it indicates an electrotechnical fault relating to the “400V” electrical circuit. Please contact an authorised dealer as soon as possible.

Electrotechnical system warning light

When the blue warning light comes on, this indicates that the traction battery temperature is too low.
When the orange warning light comes on, this indicates the traction battery or the engine temperature is too high. Opt for a calmer driving style.
If either of these warning lights come on, this may lead to reduced vehicle performance.

Anti-lock braking warning light

This lights up when the ignition is switched on and goes out after a few seconds.
If it does not go out after the ignition is switched on, or lights up when driving, there is a fault with the ABS. Braking will then be as normal, without the ABS system.
Contact an approved Dealer as soon as possible.

DISPLAYS AND INDICATORS (1/3)

The presence and operation of the display and indicators DEPENDS ON THE LEVEL OF EQUIPMENT AND THE COUNTRY.

Speedometer *1*

Vehicle speed is limited to approximately 80 mph (130 km/h).

Depending on your vehicle, this speed can be permanently limited to a set value.

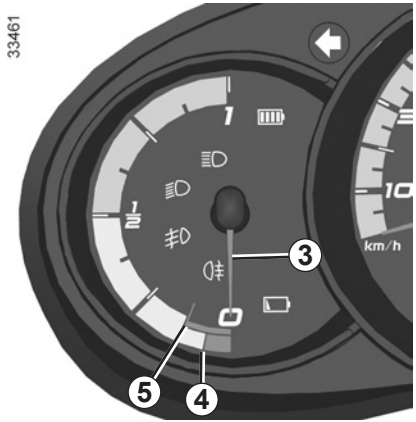

Overspeed buzzer

Depending on the vehicle, a beep sounds for 10 seconds approximately every 40 seconds as long as the vehicle is travelling at over 72 miles per hour (120 km/h).

Note: depending on the vehicle, the desired speed may be programmed; consult an approved Dealer.

Multifunction display *2*

Please refer to the information on the “Trip computer: general information” in Section 1.

Charge level *3*

The gauge indicates the level of energy remaining.

Reserve threshold *5*

This indicates that the battery is at approximately 12% charge. Warning light comes on, along with a beep.

To optimise your range, please see the information on “Recommendations: saving energy” in Section 2.

Immobilisation threshold imminent *4*

This indicates that the battery is at less than 6% charge. A beep sounds every 10 seconds and warning light flashes.

The message “Limited performance” may also be displayed on the instrument panel.

Motor performance gradually decreases until the vehicle comes to a stop.

Please see the information on “Towing: breakdown recovery” in Section 5.

The presence and operation of the display and indicators DEPENDS ON THE LEVEL OF EQUIPMENT AND THE COUNTRY.

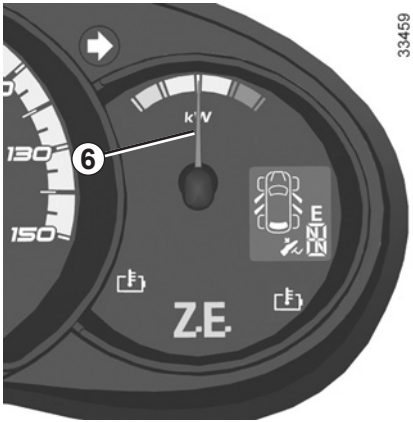

Charge meter *6*

Please refer to the information on the “Charge meter” in Section 2.

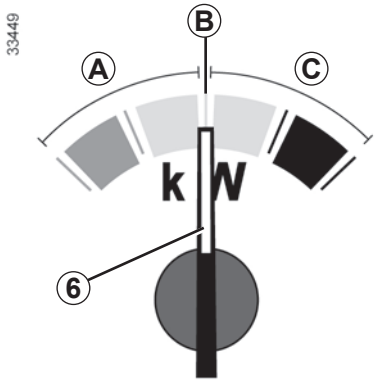

“Energy recovery” usage zone *A*
The needle tells you that the vehicle is generating energy and the traction battery is being recharged (under braking or going downhill).

“Neutral” position *B*
The needle tells you that you are at nil consumption (the vehicle is at a standstill without consuming energy).

“Consumption” usage zone *C*
The needle tells you the energy consumption (vehicle moving on a flat surface, for example).

The presence and operation of the display and indicators DEPENDS ON THE LEVEL OF EQUIPMENT AND THE COUNTRY.

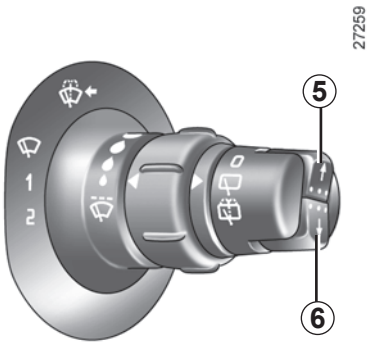

Display selection keys *5* or *6*

Depending on the vehicle, pressing the button repeatedly enables the information on the display to be selected and the trip mileage recorder to be reset (for this, the trip mileage must be selected on the display).

– Display selection

Press briefly to move from the total mileage to the trip mileage and vice versa.

–Resetting the trip mileage recorder

Once trip mileage has been selected on the display, press and hold the button.

Multifunction display

Total mileage recorder.

Trip mileage recorder.

Setting the time.

OR

Trip computer and warning system

Refer to the information on the “Trip computer” in Section 1.

Trip computer and warning system *A*

Depending on the vehicle, this includes the following functions:

– distance travelled;

– journey parameters;

– information messages;

– operating fault messages (associated with the warning light);

– warning messages (connected to the STOP warning light).

All these functions are described on the following pages.

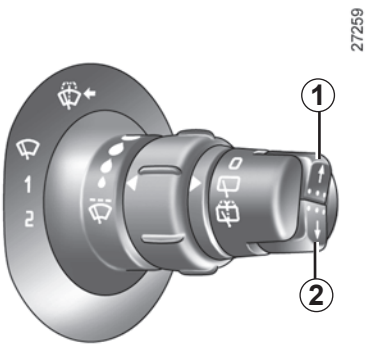

Display selection keys *1* and *2*

Scroll through the following information upwards (button ***1***) or downwards (button ***2***) by pressing briefly and successively (the display depends on the vehicle equipment and country).

a) Total mileage and trip mileage recorder;

b) journey parameters:
   – Total energy consumption since the last reset;
   – average energy consumption;
   – current energy consumption;
   – Total energy consumption since the vehicle first entered into service;
   – estimated range;
   – distance travelled;
   – average speed.

c) mileage before service;

d) cruise control and speed limiter programmed speed;

e) trip log, operating faults and information message readout.

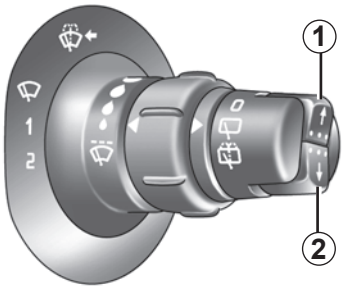

Trip mileage resetting

With “trip mileage recorder” selected on the display, press button ***1* or *2*** until the mileage recorder resets to zero.

Resetting the journey parameters (reset button)

With one of the journey parameters selected on the display, press button ***1* or *2*** until the display resets.

Reading energy consumption values

Some vehicle equipment items consume energy: the energy consumed by the vehicle may therefore differ from the energy consumed on the electric counter.

Interpreting some of the values displayed after resetting

The values showing average energy consumption and average speed will become more stable and reliable the further you have travelled since the last time the Reset button was pressed.

Automatic resetting of the journey parameters

Resetting occurs automatically when the maximum value of any of the parameters is exceeded.

TRIP COMPUTER AND WARNING SYSTEM: journey parameters (1/4)

The display of information shown below DEPENDS ON THE VEHICLE EQUIPMENT AND COUNTRY.

Examples of selections	Interpreting the display selected
101778 km 112,4 km	**a) Total mileage and trip mileage recorder.**
Consumption 20 kWh	**b) Journey parameters.** **Energy** consumed since the last reset.
Average 18,5 kWh/100km	**Average energy consumption** since the last reset. The value is displayed after having travelled at least 400 metres since the last reset.
CURRENT + 12 kW	**Current energy consumption.**

TRIP COMPUTER AND WARNING SYSTEM: journey parameters (2/4)

The display of information shown below DEPENDS ON THE VEHICLE EQUIPMENT AND COUNTRY.

Examples of selections	Interpreting the display selected
Range 118 km	**Estimated range with remaining energy.**
Distance 522 km	**Distance travelled** since the last reset.
Average 48 km/h	**Average speed** since the last reset. The value is displayed after driving 400 metres.
Consumption 487 kWh	**Total energy usage** since vehicle first entered service.

TRIP COMPUTER AND WARNING SYSTEM: journey parameters (3/4)

The display of information shown below DEPENDS ON THE VEHICLE EQUIPMENT AND COUNTRY.

Examples of selections	Interpreting the display selected
Service in 1936 km	**c) Service interval.** Distance remaining until the next service (displayed in kilometres), then when the service nears, several scenarios are possible: – interval less than **900 miles (1,500 km)** or **one month:** the message “Service due in” is displayed accompanied by the nearest term (distance or time); – interval remaining **0 km** or **service date reached:** the message “SERVICE DUE” is displayed accompanied by warning light . The vehicle requires a service as soon as possible.

Resetting the display after the service in accordance with the maintenance schedule.
The service interval must only be reset after a service which complies with the recommendations in the maintenance schedule.

Special note: to reset the service interval, press and hold one of the display reset buttons for approximately 10 seconds until the display shows the mileage permanently.

TRIP COMPUTER AND WARNING SYSTEM: journey parameters (4/4)

The display of information shown below DEPENDS ON THE VEHICLE EQUIPMENT AND COUNTRY.

Examples of selections	Interpreting the display selected
Speed limiter 90 km/h Cruise control 90 km/h	**e) Cruise control/speed limiter programmed speed.** Refer to the information on the “Speed limiter” and “Cruise control” in Section 2.

Information messages

These can help in the vehicle starting phase, or give information about a selection or a driving status.
Examples of information messages are given in the following pages.

Examples of messages	Interpretation of messages
« Charge remain. 02:10 »	Indicates the time remaining before a full charge.
« No message available »	No warning is stored.
« Brake the vehicle »	Follow these instructions: risk of damage to the motor.
« Boiler stopped »	Indicates a halt to the additional heating due to lack of fuel in the tank.
« Performance limited »	Indicates deterioration of vehicle performance.
« AUTO LIGHTS DEACTIVATED »	Indicates that the automatic lights function is deactivated.

TRIP COMPUTER AND WARNING SYSTEM: operating fault messages

These appear with the warning light and mean that you should drive very carefully to an approved Dealer as soon as possible. If you fail to follow this recommendation, you risk damaging your vehicle.

They disappear when the display selection key is pressed or after several seconds and are stored in the computer log. The warning light stays on. Examples of operating fault messages are given on the following pages.

Examples of messages	Interpretation of messages
« Check braking system »	Indicates wear or the need to check the braking system.
« Battery charge impossible »	Indicates a fault on the traction battery recharge system.
« CHECK AUTO LIGHTS »	Indicates a fault in the automatic lights operation.

These appear with the STOP warning light and require you to stop immediately, for your own safety, as soon as traffic conditions allow. Stop your engine and do not restart it. Contact an approved Dealer.

Examples of warning messages are given in the following pages. **Note:** the messages appear on the display either individually or alternately (when there are several messages to be displayed), and may be accompanied by a warning light and/or a beep.

Examples of messages	Interpretation of messages
« ENGINE OVERHEATING »	Indicates that the engine is overheating.
« STEERING FAULT »	Indicates a fault in the vehicle's power assisted steering.
« Electrical fault danger »	Indicates a fault in the electrical system.
« Electrical motor fault »	Indicates that the vehicle is losing power.
« BRAKING SYSTEM FAULT »	Indicates a fault in the braking system.

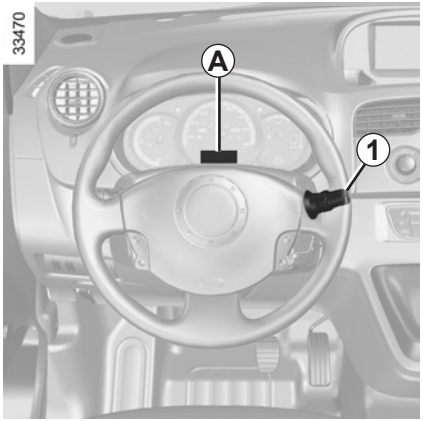

With the ignition on, the time and, depending on the vehicle, exterior temperature are displayed.

Setting the time

Resetting the clock *A*
(depending on vehicle)

Display the “Clock” page on the instrument panel by pressing one of the buttons on stalk ***1***.

For safety reasons, carry out any adjustments when the vehicle is not being driven.

After two seconds, the hours and minutes start flashing.

Press and hold the bottom button to enter the hour setting mode.

When only the hours flash, press the top button to scroll through them.

Press and hold the bottom button to enter the minute setting mode.

When only the minutes flash, press the top button to scroll through them.

Confirm by pressing and holding the bottom button on stalk ***1***.

Vehicles equipped with a navigation system, radio, etc.

Refer to the equipment instructions for the special features.

Exterior temperature

On equipped vehicles, the exterior temperature is displayed at ***A***. If it is between -3°C and +3°C, the **°C** characters flash (signalling a risk of ice).

If the electrical supply is cut (battery disconnected, broken supply wire, etc.), the clock will lose its time setting. The time must then be set.

Exterior temperature indicator

As ice formation is related to climatic exposure, local air humidity and temperature, the external temperature alone is not sufficient to detect ice.

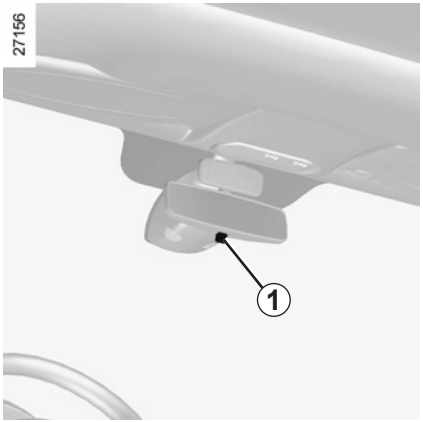

Interior rear view mirror

The interior rear view mirror is adjustable. When driving at night, tilt lever ***1*** to avoid being dazzled by the headlights of the vehicle behind.

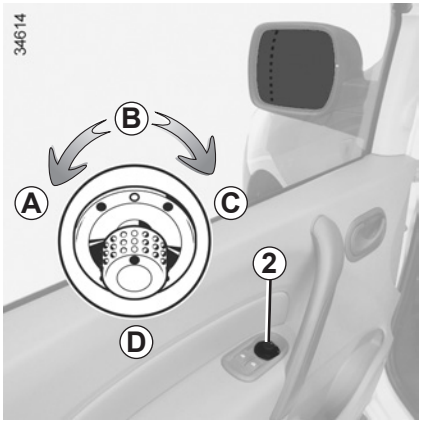

Door mirrors with electrical adjustment

With the ignition on, turn button ***2***:

– position ***A*** to adjust the left-hand door mirror;

– position ***C*** to adjust the right-hand door mirror.

B is the inactive position.

Heated door mirrors

When the engine is started, mirror de-icing is activated with the rear screen de-icing/demisting.

Folding door mirrors

Move button ***2*** to position ***D*** to fold the door mirrors in. To reset them for driving, return to position ***B***.

If you fold the door mirrors in manually before resetting them to driving position ***B***, you must first turn button ***2*** to position ***D***.

Horn

Press one of points ***2***.

Headlight flasher

Pull stalk ***1*** towards you to flash the headlights.

Hazard warning lights

Pressing switch ***3*** illuminates all four direction indicators and the side-mounted indicator lights simultaneously. It must only be used in an emergency to warn other drivers that you have had to stop in an area where stopping is prohibited or unexpected, or that you are obliged to drive under special conditions.

Depending on the vehicle, the hazard warning lights may come on automatically under heavy deceleration. You can switch them off by pressing switch ***3***.

Direction indicators

Move stalk ***1*** parallel to the steering wheel and in the direction you are going to turn.

When driving on the motorway, the steering wheel is not often turned enough to return the stalk automatically to ***0***. There is an intermediate position in which the switch may be held when changing lanes.

When the stalk is released, it automatically returns to ***0***.

PEDESTRIAN HORN

Electric vehicles are particularly quiet. This system enables you to warn people of your presence – especially pedestrians and cyclists.

The system is activated automatically when the engine is started. The sound triggers when the vehicle speed is between 1 and 20 mph (1 and 30 km/h).

Deactivating the system

With the engine running, press the switch ***1*** to deactivate the function. The warning light ***2*** in the switch ***1*** comes on.

Activating the system

With the engine running, press the switch ***1*** to activate the function. The warning light ***2*** in the switch ***1*** goes out.

System activated:

– it goes on standby automatically when the vehicle speed is above approximately 20 mph (30 km/h);

– The system is activated automatically when the vehicle is being driven at a speed below approximately 20 mph (30 km/h).

Warning noise selection

– Keep the switch ***1*** depressed.
The various sounds will be played in succession;

– release the switch ***1*** on the sound of your choice.

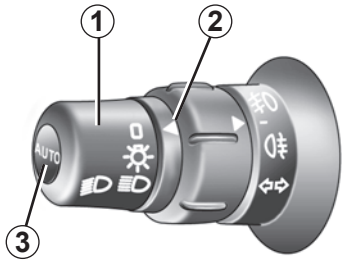

Side lights

Turn the end of stalk ***1*** until the symbol is opposite mark ***2***.

The instrument panel will light up.

Dipped beam headlights

Manual operation

Turn the end of stalk ***1*** until the symbol is opposite mark ***2***. This indicator light on the instrument panel comes on.

Automatic operation (depending on vehicle)

When the engine is started, the dipped beam headlights switch on or off automatically depending on the brightness of the light outside, without any action on stalk ***1***.
This function can be deactivated or reactivated.

– **To switch it on:** with the ignition on and the vehicle stationary, press and hold button ***3*** for at least four seconds. Depending on the vehicle, the message “lights ON” appears on the instrument panel.

– **To deactivate:** with the ignition on and the vehicle stationary, press and hold button ***3*** for at least four seconds. Depending on the vehicle, the message “lights OFF” appears on the instrument panel.

Main beam headlights

With stalk ***1*** in dipped beam headlights position, move the stalk towards you. The indicator light on the instrument panel then lights up.

To return to the dipped beam headlight position, pull the stalk towards you again.

Before driving at night: check the electrical equipment is operating correctly and adjust your headlights (if your vehicle is not carrying its normal load). As a general precaution, check that the lights are not obscured (by dirt, mud, snow or objects being transported).

“See-me-home lighting” function

(depending on vehicle)

This function (useful, for example, when opening a gate, garage, etc.) enables you to switch the dipped headlights on momentarily.

With the ignition off and the headlights off, pull stalk ***1*** towards you: the dipped beam headlights come on for approximately sixty seconds.

This action may be carried out no more than four times for a maximum lighting period of four minutes.

To switch off the lights before they switch off automatically, turn the end of stalk ***1*** then bring it back to position 0, or switch on the ignition.

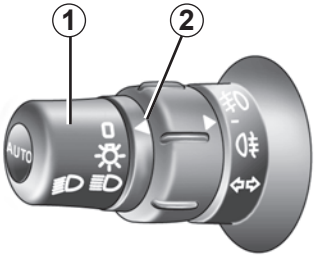

27260

0 Switching off the lights

There are two possibilities:

– manually, move stalk ***1*** to its original position;

– automatically, the lights are switched off when the engine is stopped, the driver’s door is opened or, depending on the vehicle, when the vehicle is locked. In this case, the next time the engine is started the lights will be switched back on according to the position of the ring ***2***.

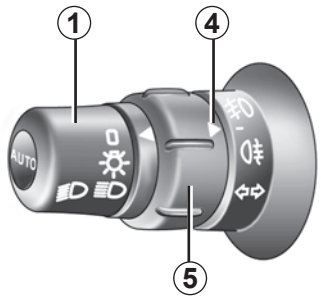

Front fog lights
(depending on vehicle)

The side lights or dipped beam headlights must be on.

Turn ring ***5*** on stalk ***1*** until the symbol is opposite mark ***4***, then release it. This indicator light on the instrument panel comes on.

Rear fog light

The front fog lights and the side lights or dipped beam headlights must be on.

Turn ring ***5*** on stalk ***1*** until the symbol is opposite mark ***4***, then release it. This indicator light on the instrument panel comes on.

To avoid inconveniencing other road users, remember to switch off the rear fog light when it is no longer needed.

Turning off the fog lights

Turn ring ***5*** again to position mark ***4*** opposite the symbol for the light you wish to switch off.

Switching off the exterior lights or the ignition switches off the front and rear fog lights.

ELECTRICAL ADJUSTMENT OF THE DIPPED BEAM HEADLIGHTS

Control knob ***1*** is used to adjust the height of the headlight beams according to the load.

Turn control knob ***1*** downwards to lower the headlights and upwards to raise them.

Unladen, control knob ***1*** should be at 0.

When the vehicle is partially or completely laden, the headlight beam should be set to light the road at between 50 and 100 metres. Then use positions 1 to 4 on the control knob.

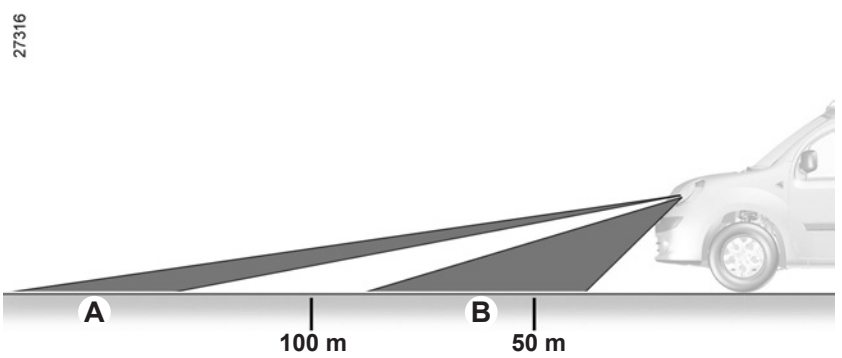

A Poor adjustment: the lights are set too high and could dazzle other drivers. Turn the control knob downwards to lower the beam.

B Good adjustment: the beam's maximum range is between 50 and 100 metres.

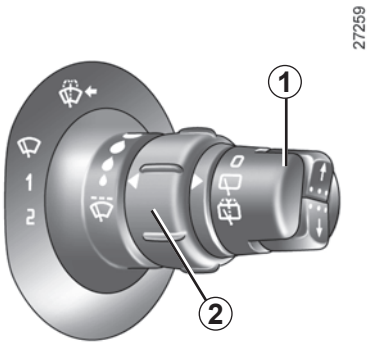

Windscreen wiper

With the ignition on, move stalk ***1*** parallel to the steering wheel:

A **Park**

B **Intermittent wiping**
The wipers will pause for several seconds between sweeps. It is possible to change the time between sweeps by turning ring ***2***.

C **Normal wiping speed**

D **Fast wiping speed**

Special note

When the vehicle is being driven, the wiping speed slows down whenever the vehicle stops. For example, fast wiping speed will slow to normal wiping speed. As soon as the vehicle moves off, wiping will return to the speed originally selected.

If stalk ***1*** is operated, it overrides and cancels the automatic function.

> If for any reason the wipers are jammed (e.g. frozen to windscreen by ice, etc.), the system will automatically cut the power supply to the wipers.

Automatic wiper function
(depending on vehicle)

With the engine running, move stalk ***1***.

A **Park**

B **Automatic wiper function**
When this position is selected, the system detects the presence of water on the windscreen and triggers wiping at a suitable wiping speed. The triggering threshold and the time between sweeps can be adjusted by turning ring ***2***.

NB: in foggy weather or during snowfalls, the wiping is not automatically triggered and remains under the driver's control.

C **Normal wiping speed**

D **Fast wiping speed**

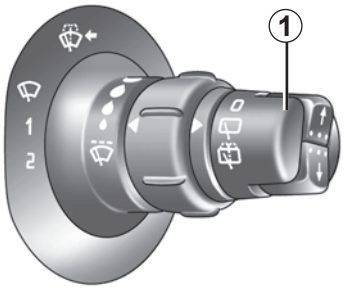

27259

Windscreen wiper

With the ignition on, pull stalk ***1*** towards you.

A brief pull will trigger a single sweep of the wipers, in addition to the windscreen washer.

A longer pull will trigger three sweeps of the wipers followed, a few seconds later, by a fourth, in addition to the windscreen washer.

In freezing or snowy weather, ensure they are not stuck to the windscreen (including the central area located behind the interior rear-view mirror) and the rear screen before starting the wipers (risk of motor overheating).

Before any action on the windscreen (washing the vehicle, de-icing, cleaning the windscreen, etc.), return stalk ***1*** to position **A** (park).

Risk of injury and/or damage.

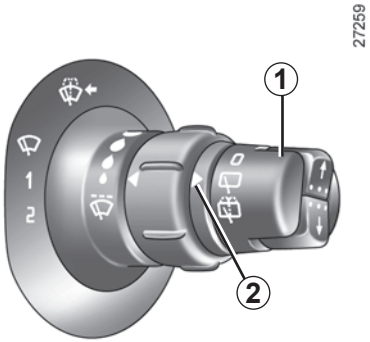

Speed-dependent rear screen wiper with timer
(depending on vehicle)

Turn the end of stalk ***1*** to position the symbol opposite mark ***2***.

Wiping frequency varies with speed.

Special note

If the windscreen wipers are operational when you select reverse gear, the rear screen is wiped intermittently.

Rear screen wash/wipe
(depending on vehicle)

Turn the end of stalk ***1*** to position the symbol opposite mark ***2***.

When the stalk is released, it returns to the rear screen wiper position.

Check the condition of the wiper blades. You are responsible for their service life:

– they must remain clean: clean the blades, windscreen and rear screen regularly with soapy water;

– do not use them when the windscreen or rear screen are dry;

– free them from the windscreen or rear screen when they have not been used for a long time.

In all cases, replace them as soon as they begin to lose efficiency: approximately once a year.

Before using the rear wiper, check that no object obstructs the travel of the blade.

Do not use the wiper arm to open or close the tailgate.

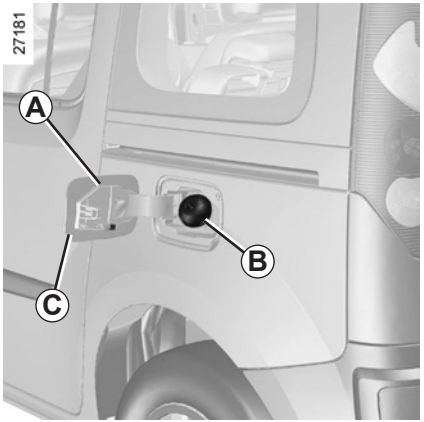

Useful capacity of fuel tank: 13 litres approx.

With the vehicle unlocked, to open the fuel filler flap, place your finger in opening ***C*** and pull the flap.

Use the ignition key to open cap ***B***.

Do not operate the additional heating when the vehicle fuel tank is being filled.

Fuel grade

Use a high-grade fuel that complies with the legislation in force in each country and which **must** conform to the specifications given on the label on cover ***A***.

Fuel odours and smoke may be present after a long period without using the additional heating.

Persistent smell of fuel

If you notice a persistent smell of fuel you should:

– stop the vehicle as soon as traffic conditions allow and switch off the ignition;

– switch on the hazard warning lights and ask your passengers to leave the vehicle and to keep away from traffic;

– contact an approved Dealer.

Fuel filling

– Insert the nozzle so that the valve is open and **fully** insert the nozzle before engaging it in order to fill the tank (risk of splash-back).
– Keep the nozzle in this position throughout the entire filling operation.

When the pump cuts out automatically at the end of the filling procedure, a maximum of two further filling attempts may be made so as to leave sufficient room for expansion.

Fuel filler cap: this is of a special type.

If you have to replace it, make sure it is identical to the original cap. Contact an approved Dealer.
Never place the cap near a source of heat or flame.

Do not wash the filler area with a high-pressure washer.

Section 2: Driving

(Advice on use relating to fuel economy and the environment)

Starting, stopping the engine 2.2
Gear control 2.3
Handbrake 2.4
Vehicle range: recommendations 2.5
Environment 2.7
Charge meter 2.8
“ECO” mode 2.9
Driving correction devices 2.10
Speed limiter 2.12
Cruise control 2.15
Parking distance control 2.19

“Stop and steering lock” position St

To unlock: turn the key and the steering wheel slightly.

To lock: remove the key and turn the steering wheel until the steering column locks.

“Accessories” position A

When the ignition is switched off, any accessories (radio, etc.) will continue to function.

“On” position M

The ignition is switched on:

Start position D

Starting the engine

– Move lever ***1*** to position **P** only **;**
– turn the key to position **D** and then release it.

Warning light GO may flash on the instrument panel, along with a beep. As soon as light GO stops flashing and the beep stops, the vehicle is ready to drive.

The vehicle can only be started if the charging cord is unplugged from the vehicle.
The vehicle can only be started if the selector lever is at **P**. Please see the information on “Gear control” in Section 2.

Stopping the engine

With the engine running, turn the key back to the “Stop” position **St**. Warning light GO goes out.

Driver’s responsibility

Never leave your vehicle with the key inside and never leave a child (or a pet) unsupervised, even for a short while.

There is a risk that they could start the engine or operate electrical equipment (electric windows etc.) and trap part of their body (neck, arms, hands, etc.).
Risk of serious injury.

Never switch off the ignition before the vehicle has come to a complete stop. Switching off the engine disables the assistance equipment: brakes, power-assisted steering, etc., and the passive safety devices such as airbagsand pretensioners.

Operates similar to an automatic gearbox.

Selector lever *1*

The display ***A*** on instrument panel indicates the gear lever position as ***3***.

P : Park

R : Reverse

N : Neutral

D : Forward

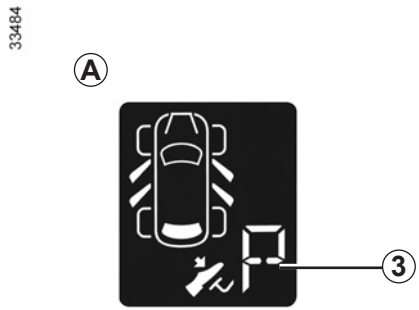

Operation

Keeping your foot on the brake pedal and with the selector lever ***1*** in position **P**, turn the ignition.
Start the motor.
To move out of position **P**, you must depress the brake pedal before pressing unlocking button ***2***.
With your foot on the brake pedal (warning light in display ***A*** goes out), move the lever out of position **P**.
Only engage D or R when the vehicle is stopped, with your foot on the brake and the accelerator pedal released.

Driving

Put lever ***1*** in position **D**.

Hill start

For hill starts, especially after a maximum traction battery charge and for the first few miles, we recommend using the handbrake.

While driving, press the accelerator pedal to achieve the desired speed.

Reverse

Put lever ***1*** in position **R.**

The reversing lights will come on as soon as reverse gear is selected (with the ignition on).

The vehicle can only start if the gear selector is in position **P**.

The vehicle can only be started if the charging cord is unplugged from the vehicle.

Parking the vehicle

When the vehicle is stopped, move the lever to position **P** while keeping your foot on the brake pedal: the gearbox is in neutral and the drive wheels are mechanically locked by the driveshaft.

Apply the handbrake.

In the event an impact to the underside of the vehicle (e.g.: striking a post, raised kerb or other street furniture), this may result in damage to the vehicle (e.g.: twisted axle), the electrical circuit or the traction battery.

Do not touch the circuit elements or any fluids or liquids.

To prevent any risk of accident, have your vehicle checked by an authorised dealer.

Risk of serious injury or electric shock and risk to life.

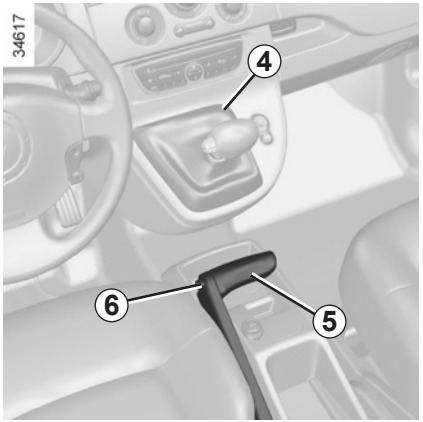

When setting off, if the lever is locked in position **P** even though you are pressing the brake pedal, the lever can be released manually. To do this, unclip the base of the lever and simultaneously press at location ***4*** and the unlocking button ***6*** on the lever.

Handbrake

To release:

Pull the lever ***5*** up slightly, press button ***6*** and then lower the lever to the floor.

To apply:

Pull upwards, check that the vehicle is properly immobilised.

Make sure that the handbrake is properly released when driving (red indicator light off), otherwise overheating, or even damage, may occur.

When stationary and depending on the slope and/or vehicle load, it may be necessary to pull up the handbrake at least two extra notches and engage position **P**.

VEHICLE RANGE: recommendations (1/2)

The vehicle range is approved for a mixed NEDC cycle (New European Driving Cycle).
In real usage, the range of an electric vehicle may vary depending on several factors over which you have partial control, which may make a considerable difference to the vehicle range. These factors are:
– speed and driving style;
– type of road;
– heating level;
– tyres;
– vehicle loading.
Furthermore, activating ECO mode enables the vehicle to automatically take charge of all energy-consuming elements to reduce their consumption to the fullest possible extent. Please refer to the information on “Eco-driving” in Section 2.

Speed and driving style

High speeds will reduce your vehicle’s range.
A “sporty” driving style reduces your vehicle range: opt for a “lighter” driving style.

34630

Drive at a constant speed.

Adapt your driving style to avoid excessive energy consumption. Please refer to the information on “Charge meter” in Section 2.

Anticipate traffic changes by lifting your foot off the accelerator pedal in order to recover energy. Please refer to the information on “Charge meter” in Section 2.

Favour ECO mode (please see information about “ECO mode function” in Section 2).

34628

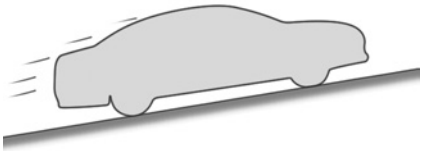

Road type

Do not try to maintain the same speed up a hill, accelerate no more than you would on flat ground. Keep your foot in the same position on the accelerator pedal.

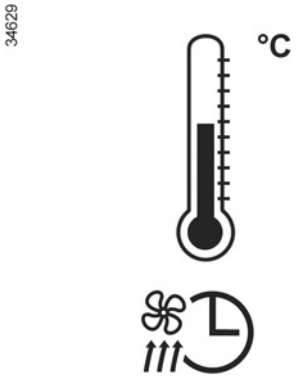

Heating levels

The use of heating or air conditioning reduces vehicle range.
Before using the vehicle, opt for “programmable heating” mode to maintain vehicle range (please refer to the information in “Heating, air conditioning programming” in Section 3).
When driving, minimise the use of heating and air conditioning and opt for using the additional heating (please refer to the information on “Additional heating” in Section 3).

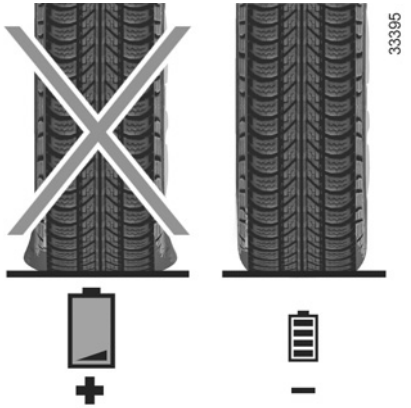

Tyres

An under-inflated tyre increases energy consumption. Comply with the specified tyre pressures for your vehicle.
When driving, use tyres made by the same manufacturer, with the same dimensions, type and structure as the original tyres. The use of non-regulation tyres significantly reduces vehicle range.

Please see the information on “Tyre pressure” in Section 4.

Vehicle loading

Avoid pointlessly overloading your vehicle.

ENVIRONMENT

Your vehicle has been designed with respect for the **environment** in mind for its entire service life: during production, use and at the end of its life.
This commitment is illustrated by the of the manufacturer eco² signature.

Manufacture

Your vehicle has been manufactured at a factory which complies with a policy to reduce the environmental impact on the surrounding areas (reduction of water and energy consumption, visual and noise pollution, atmospheric emissions and waste water; sorting and re-using waste).

Emissions

Your vehicle has been designed to emit fewer greenhouse gases (CO2) while in use, and therefore to consume less fuel (eg. 140 g/km, equivalent to 5.3 l/100 km for a diesel vehicle).

Our vehicles are also equipped with a particle filter system including a catalytic converter, an oxygen sensor and an active carbon filter (the latter prevents vapour from the fuel tank being released into the open air).

For certain diesel vehicles, this system also has a particle filter to reduce the volume of soot particles emitted.

Please make your own contribution towards protecting the environment too

– Worn parts replaced in the course of routine vehicle maintenance (vehicle battery, oil filter, air filter, batteries, etc.) and oil containers (empty or filled with used oil) must be disposed of through specialist organisations.
– At the end of the vehicle's service life, it should be sent to approved centres to ensure that it is recycled.
– In all cases, comply with local legislation.

Recycling

Your vehicle is 85% recyclable and 95% recoverable.

To achieve these objectives, many of the vehicle components have been designed to enable them to be recycled. The materials and structures have been carefully designed to allow these components to be easily removed and reprocessed by specialist companies.

In order to preserve raw material resources, this vehicle incorporates numerous parts made from recycled plastics or renewable materials (vegetable or animal-derived materials such as cotton or wool).

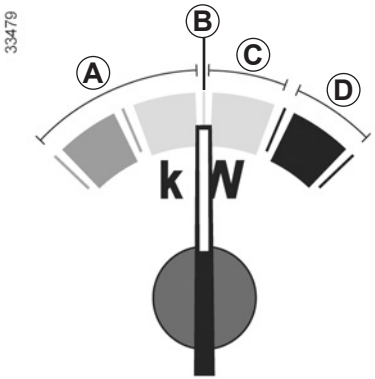

The traction battery supplies the electrical energy required for the motor to move the vehicle.
When you lift your foot off the accelerator pedal, the motor generates electrical current during deceleration, and this energy is used to recharge the traction battery.

“Energy recovery” usage zone *A*

Indicates that the vehicle is generating energy and recharging the battery.

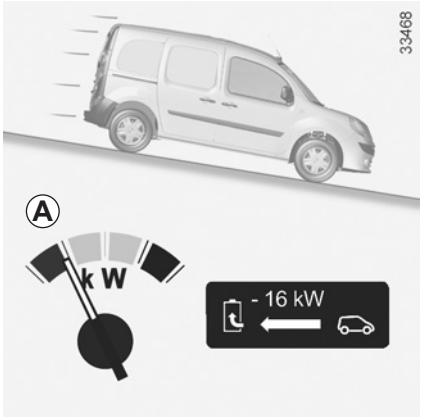

Energy recovery features

The motor generates a more significant engine brake than a conventional vehicle.
After a maximum charge for the traction battery and during the first few miles when driving the vehicle, the engine brake is temporarily reduced. Please adapt your driving style accordingly.

“Neutral” position *B*

Indicates nil consumption.

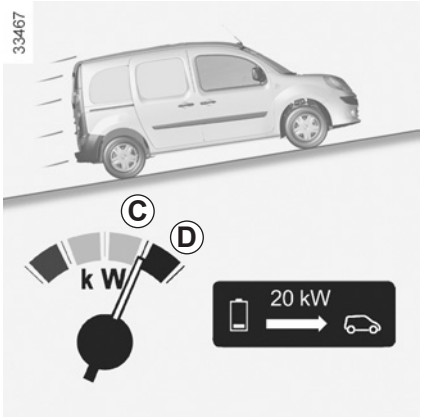

“Recommended consumption” usage zone *C*

Indicates “economical” energy consumption

“Consumption not recommended” usage zone *D*

Indicates significant energy consumption.

“ECO” MODE FUNCTION

This function enables vehicle range to be optimised by limiting engine performance.

Activating the function

Press switch ***1***.

Warning light ***2*** comes on the instrument panel.

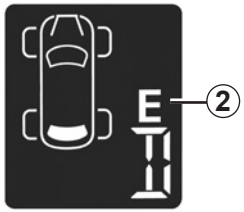

Disabling the function

Press switch ***1***.

Warning light ***2*** goes out on the instrument panel.

It is possible to regain your motor performance and exit this function at any time. To do this: depress the accelerator pedal **firmly and fully**. Warning light ***2*** goes out on the instrument panel.

Depending on the vehicle, this is composed of:
- **ABS (anti-lock braking system);**
- **emergency brake assist with, depending on the vehicle, braking anticipation;**

These functions are an additional aid in the event of critical driving conditions, enabling the vehicle behaviour to be adapted to suit the driving conditions.

However, the functions do not take the place of the driver. **They do not increase the vehicle's limits and should not encourage you to drive more quickly.** Therefore, they can under no circumstances replace the vigilance or responsibility of the driver when manoeuvring the vehicle (the driver must always be ready for sudden incidents which may occur when driving).

ABS (Anti-lock Braking System)

Under heavy braking, the ABS prevents the wheels from locking, allowing the stopping distance to be managed and keeping control of the vehicle.

Under these circumstances, the vehicle can be steered to avoid an obstacle whilst braking. In addition, this system can increase stopping distances, particularly on roads with low surface grip (wet ground, etc.).
You will feel a pulsation through the brake pedal each time the system is activated. The ABS does not in any way improve the vehicle's physical performance relating to the road surface and roadholding. It is still **essential** to follow the rules of good driving practice (such as driving at a safe distance from the vehicle in front).

In an emergency, apply **firm and continuous pressure** to the brake pedal. There is no need to pump it repeatedly. The ABS will modulate the force applied in the braking system.

Operating faults:

- If the ABS warning light on the instrument panel comes on while driving, **braking is still operational**.
- If the ABS and ! warning lights on the instrument panel come on while driving, **this indicates a fault in the braking system.**

In such cases, the ABS and emergency brake assist are also deactivated and, depending on the vehicle, the messages "check ABS" and "check braking system" appear on the instrument panel.

Consult an approved dealer.

Your braking systems are partially operational. However, it is **dangerous to brake suddenly** and it is essential to stop immediately, as soon as traffic conditions allow. Contact an approved dealer.

Emergency brake assist

This is an additional system to ABS which helps reduce vehicle stopping distances.

Operating principle

The system detects an emergency braking situation. In this case, the braking assistance immediately develops maximum power and may trigger ABS regulation.

ABS braking is maintained as long as the brake pedal is not released.

Hazard warning lights switching on

Depending on the vehicle, these may light up in the event of sudden deceleration.

Operating faults

When the system detects an operating fault the message “braking fault” appears on the instrument panel along with the warning light.

Consult an approved dealer.

The speed limiter function helps you stay within the driving speed limit that you choose, known as the **limit speed**.

Controls

1 Main “On/Off” switch.

2 Speed limiter activation, memory and increase (+).

3 Decreasing the speed limiter (-).

4 Speed limiter function standby (with limited speed memory) (O).

5 Activation and recall of memorised limit speed (R).

Switching on

Press the side switch ***1*** . Warning light comes on, lit orange, and the message “limiter” appears on the instrument panel, accompanied by dashes to indicate that the speed limiter function is activated and waiting to store a limit speed.

To store the current speed, press switch ***2*** (+): The limit speed will replace the dashes.

The minimum stored speed is 20 mph (30 km/h).

Driving

When a limited speed has been stored and this speed is not reached, driving is similar to driving a vehicle without the speed limiter function.

Once you have reached the stored speed, no effort on the accelerator pedal will allow you to exceed the programmed speed except in an emergency (refer to information on “Exceeding the limit speed”).

Varying the limit speed

The limit speed may be changed by repeatedly pressing:

– switch ***2*** (+) to increase the speed;

– switch ***3*** (-) to decrease the speed.

The speed limiter function is in no way linked to the braking system.

Exceeding the limit speed

It is possible to exceed the limit speed at any moment. To do this: press the accelerator pedal **firmly and fully** (beyond the resistance point).

Whilst the speed is being exceeded, the cruising speed displayed on the instrument panel flashes.

Then, release the accelerator: the speed limiter function will return as soon as you reach a speed lower than the stored speed.

Limited speed cannot be maintained

If driving up or down a steep gradient, the system is unable to maintain the limit speed: the stored speed will flash on the instrument panel information display to inform you of this situation.

Putting the function on standby

The speed limiter function is suspended when you press switch ***4*** (O). In this case, the limit speed remains stored and the message “SPEED MEMORY” accompanied by this speed appears on the instrument panel.

Recalling the limit speed

If a speed has been stored, it can be recalled by pressing switch ***5*** (R).

When the speed limiter is put on standby, pressing switch ***2*** (+) reactivates the function without taking into account the stored speed: it is the speed at which the vehicle is moving that is taken into account.

Switching off the function

The speed limiter function is deactivated when you press switch ***1***. In this case, the speed is no longer stored. The orange instrument panel warning light goes out, confirming that the function is stopped.

The cruise control function helps you to maintain your driving speed at a speed that you choose, called the **cruising speed**.

This cruising speed may be set at any speed above 18 mph (30 km/h).

The cruise control function is in no way linked to the braking system.

This function is an additional driving aid. However, the function does not take the place of the driver.

Therefore, it can under no circumstances replace the driver's responsibility to respect speed limits and to be vigilant (the driver must always be ready to brake).

Cruise control must not be used in heavy traffic, on undulating or slippery roads (black ice, aquaplaning, gravel) and during bad weather (fog, rain, side winds etc.).

There is a risk of accidents.

Controls

1. Main "On/Off" switch.
2. Cruising speed activation, storage and increase switch (+).
3. Decreasing cruising speed (-).
4. Switch the function to standby (with cruising speed saved) (O).
5. Activation with recall of saved cruising speed (R).

Switching on

Press switch ***1*** side .

Warning light ***6*** comes on, lit green, and the message “cruise control” appears on the instrument panel, accompanied by dashes to indicate that the cruise control function is activated and waiting to save a cruising speed.

Activating cruise control

At a steady speed (above 18 mph (30 km/h approximately)) press switch ***2*** or (+): the function is activated and the current speed is saved.

The cruising speed replaces the dashes and the cruise control is confirmed by the appearance of a message on the instrument panel and warning light ***7*** lit green, as well as warning light ***6***.

Driving

Once a cruising speed is memorised and the cruise control function is active, you may lift your foot off the accelerator pedal.

Important: you are nevertheless advised to keep your feet close to the pedals in order to react if necessary.

Adjusting the cruising speed

The cruising speed may be changed by pressing the following repeatedly:

– switch ***2*** (+) to increase the speed,

– switch ***3*** (-) to decrease the speed.

The cruise control function is in no way linked to the braking system.

Exceeding the cruising speed

The cruising speed may be exceeded at any time by depressing the accelerator pedal. While it is being exceeded, the cruising speed flashes on the instrument panel.

Then, release the accelerator: after a few seconds, the vehicle will automatically return to its set cruising speed.

Cruising speed cannot be maintained

When driving down a steep gradient, the system is unable to maintain the cruising speed: the stored speed will flash on the instrument panel information display to inform you of this situation.

Putting the function on standby

The function is set to standby if you:
– the brake pedal;
– move to neutral position;
– switch ***4*** (O).

In all three cases, the cruising speed is stored.

Standby is confirmed when the green warning light goes out and the "stored" message appears on the instrument panel.

Recalling the cruising speed

If a speed has been stored, it can be recalled by pressing button ***5*** (R), on condition that you are driving faster than approximately 20 mph (30 km/h) and that you are sure that the driving conditions are suitable (traffic, road surface condition, weather conditions, etc.).

NB: if the speed previously stored is much higher than the current speed, the vehicle will accelerate more rapidly to reach this threshold.

When the cruise control function is put on standby, pressing switch ***2*** (+) reactivates the cruise control function without taking into account the stored speed: it is the speed at which the vehicle is moving that is taken into account.

Switching off the function

The cruise control function is deactivated if you press switch ***1***: in this case a speed is no longer stored.

The green and indicator lights on the instrument panel go out, confirming that the function is deactivated.

Putting the cruise control on standby or switching it off does not cause a rapid reduction in speed: you must brake by depressing the brake pedal.

PARKING DISTANCE CONTROL (1/2)

Operating principle

Ultrasonic sensors, fitted in the vehicle's rear bumper, measure the distance between the vehicle and an obstacle when reversing.

This measurement is indicated by beeps which become more frequent the closer you come to the obstacle, until they become a continuous beep when the vehicle is approximately 25 centimetres from the obstacle.

There is a beep when reverse gear is engaged. If the beep sounds for a long time (3 seconds), this signals an operating fault.

NB: ensure that the ultrasonic sensors are not obscured (by dirt, mud, snow, etc.).

In the event an impact to the underside of the vehicle (e.g.: striking a post, raised kerb or other street furniture) this may result in damage to the vehicle (e.g.: twisted axle), the electrical circuit or the traction battery.

To avoid any risk of accident, have your vehicle checked by an approved dealer.

This function is an additional aid that indicates the distance between the vehicle and an obstacle whilst reversing, using sound signals.

Under no circumstances should it replace the driver's care or responsibility whilst reversing.

The driver should always look out for sudden hazards during driving: always ensure that there are no moving obstacles (such as a child, animal, pram, bicycle, etc.) or small, narrow objects such as stones or posts in your path when manoeuvring.

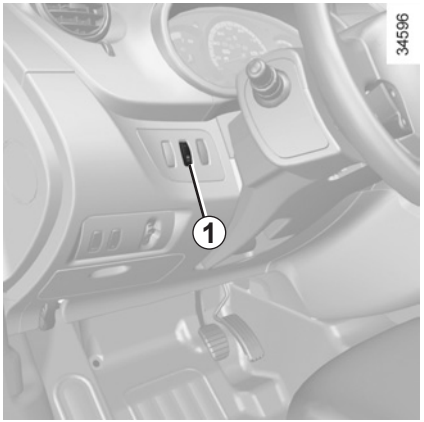

Temporary deactivation of the system

(depending on vehicle)

Press switch ***1*** to deactivate the system:

The indicator light built into the switch lights up to remind you that the system is deactivated.

Pressing the switch again will reactivate the system and switch off the indicator light.

The system is automatically reactivated after the ignition is switched off and the engine restarted.

Prolonged deactivation of the system

You can deactivate the system permanently by pressing and holding switch ***1***.

The warning light built into the switch remains lit constantly.

The deactivated system can be reactivated by pressing and holding the switch again.

Operating faults

When the system detects an operating fault there will be a 3-second continuous beep as a warning. Please see an authorised dealer.

Section 3: Your comfort

Air vents: air outlets 3.2
Air conditioning, heating 3.4
programming 3.7
Additional heating 3.9
Air conditioning: information and advice on use 3.11
Interior lighting 3.12
Sun visor/Mirror 3.14
Electric windows 3.15
Half-opening window 3.16
Ashtrays 3.17
Passenger compartment storage space and fittings 3.18
Rear bench seat 3.21
Transporting objects in the boot 3.24
Towbar 3.25
Luggage net 3.26

AIR VENTS: air outlets (1/2)

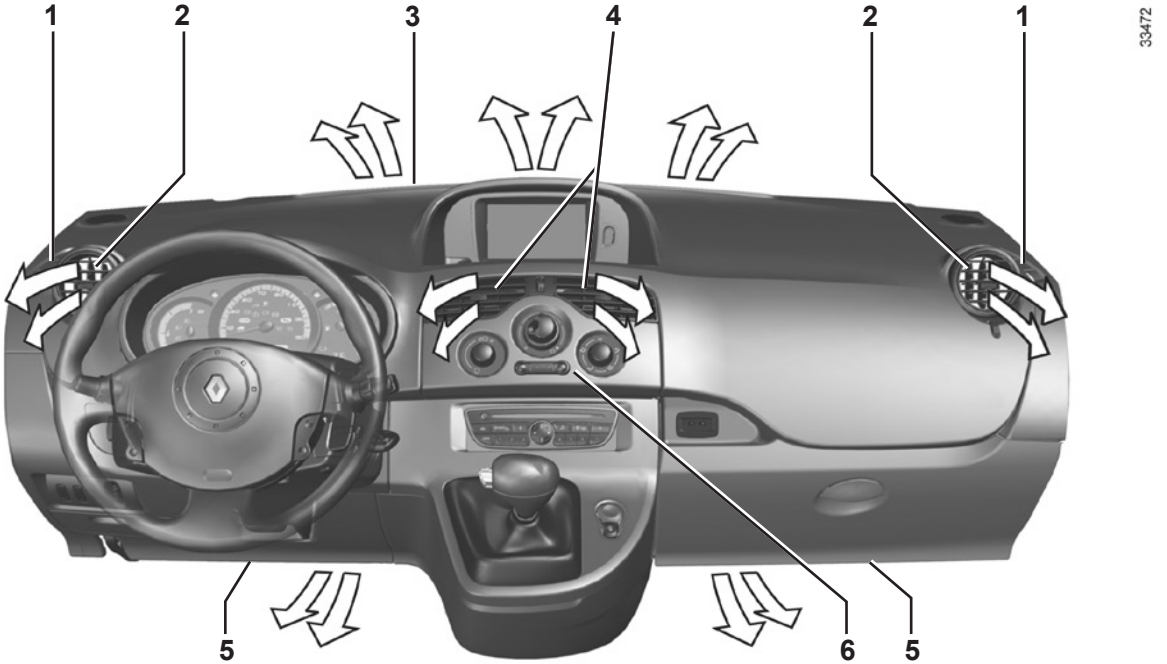

1 Demister outlets, side windows.

2 Side air vents.

3 Demisting outlets for the windscreen.

4 Centre air vents.

5 Footwell vents.

6 Control panel

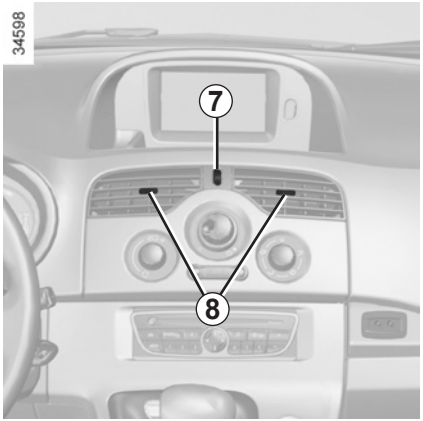

Centre air vents

Settings

Air flow:

Move the control knob ***7*** (beyond the resistance point).

Air distribution:

Right/left: move tabs ***8***.

Up/down: guide the air vent up or down.

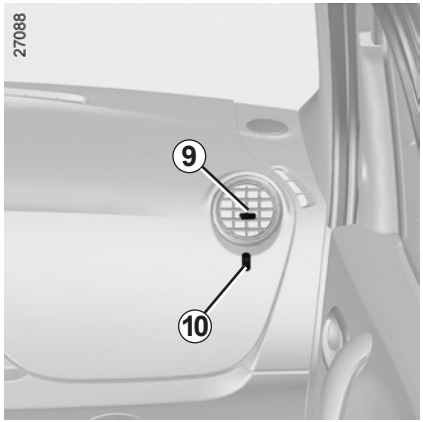

Side air vents

Settings

Air flow:

Move the control knob ***10*** (beyond the resistance point).

Air distribution:

Right/left: move tab ***9***.

Up/down: guide the air vent up or down.

To remove bad odours from your vehicles, only use the systems designed for this purpose. Consult an approved Dealer.

Do not add anything to the vehicle's ventilation circuit (for example, to remove bad odours).

There is a risk of damage or of fire.

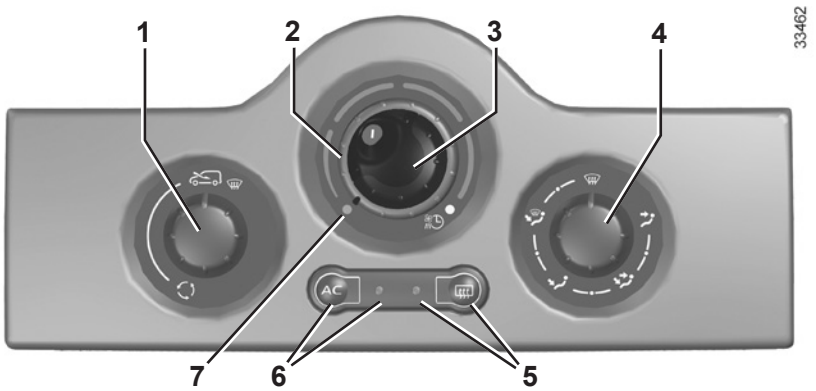

The controls

1 - Air recirculation control.

2 - Adjusting the air temperature and selecting the heating and air-conditioning programming.

3 - Adjusting the ventilation fan speed.

4 - Adjusting air distribution in the passenger compartment.

5 - Heated rear screen and heated door mirror de-icer and demisting control and warning light.

6 - Air conditioning operation control and indicator light (depending on vehicle).

7 - Stopping heating. In the stop position, heating no longer uses up any energy.

Information and advice for use:

Refer to information on “Air conditioning: information and advice on use”.

Switching air conditioning on or off

The air conditioning is switched on (indicator light illuminated) or off (indicator light extinguished) using button ***6***.

The air conditioning system is used for:

– lowering the temperature inside the passenger compartment;

– eliminating condensation more quickly.

The air conditioning does not operate when the exterior temperature is low.

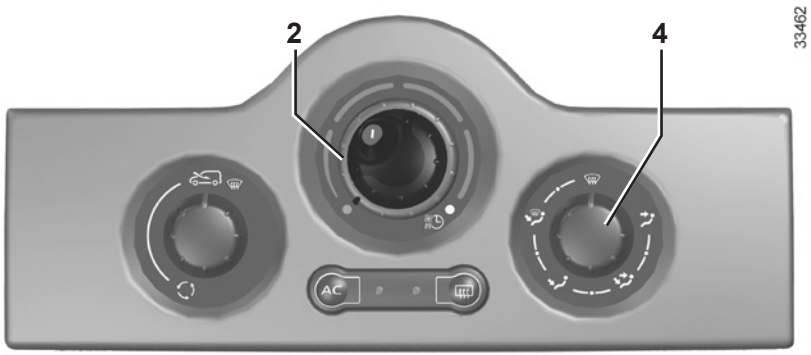

Adjusting the air temperature

Turn control ***2*** to obtain the desired temperature. The further the pointer is away from the heating stop position, the higher the temperature will be.

If the outdoor temperature is too high, the heating decreases automatically. This limits energy consumption and maintains the range of the vehicle.

When the air conditioning system is used for long periods, it may begin to feel cold. To increase the temperature, turn control ***2*** to the right.

Distribution of air in the passenger compartment

Turn control ***4*** to position the pointer opposite the marked positions.

The air flow is directed to the windscreen demisting vents and the side windows. This position prevents the formation of condensation.

The air flow is directed to the windscreen demisting vents, the side windows and the passenger footwells.
This is the recommended position for the best temperature in cold weather.

The air flow is directed mainly towards the footwells.

The air flow is directed to all air vents and the footwells.

This is the recommended position for the best temperature in hot weather.

The air flow is directed mainly to the dashboard vents.

Rapid demisting

Turn the controls to the positions :
– air from the outside;
– maximum temperature;
– demisting.

Using the climate control increases the speed of demisting.

Adjusting the ventilation speed

Normal use

Turn control ***3*** to one of the four positions to start the ventilation system and adjust the power.

Select position 1 for minimum ventilation and position 4 for maximum ventilation.

Position 0

In this position:

– the air conditioning or heating stops automatically even if button ***6*** is activated and the warning light remains lit;

– the ventilation speed of air in the passenger compartment is zero;

– there is, however, a slight flow of air when the vehicle is moving.

This position should not normally be used.

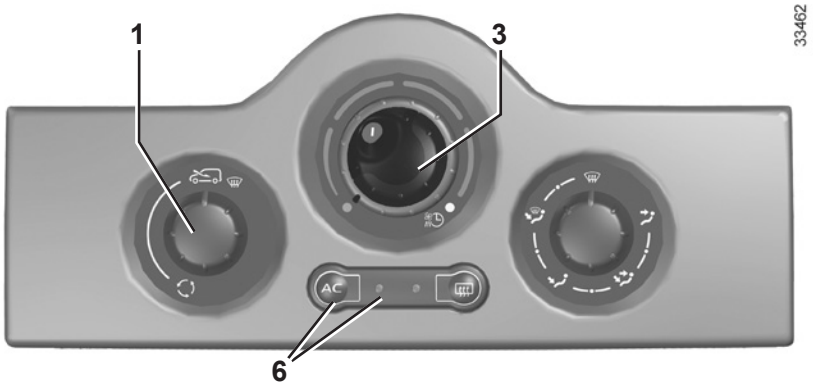

Air recirculation (isolation of the passenger compartment)

Turn control ***1*** towards the air recirculation symbol .

In these conditions air is taken from the passenger compartment and is recirculated, with no air being taken from outside the vehicle.

Air recirculation operates as follows:

– isolating the passenger compartment from the outside air (driving in polluted areas, unpleasant odours, etc.);

– bringing the passenger compartment to the desired temperature as quickly as possible.

Prolonged use of this position can lead to condensation forming on the side windows and windscreen and problems due to the use of non-renewed air in the passenger compartment.

We therefore advise you to return to normal mode (external air) as soon as the air recirculation function is no longer required, by turning control ***1*** again.

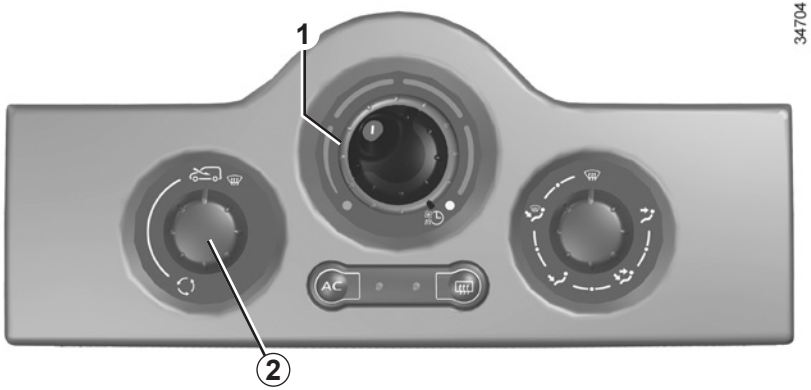

Adjusting the programming

This function enables the electric network (and the not the traction battery) to be used under certain conditions, in order to obtain a comfortable temperature prior to using the vehicle.

It triggers the heating in cold weather and the fan in warm weather.

Operating conditions

– the ignition must be switched off;

– the battery charging must be finished for the function to be triggered;

– the vehicle has to be plugged into the mains;

and

– control ***1*** must be position .

In cold weather (< 0°C), you are recommended to position control ***2*** in air recirculation position. This enables greater efficiency and lower energy consumption in the passenger compartment ambient temperature.

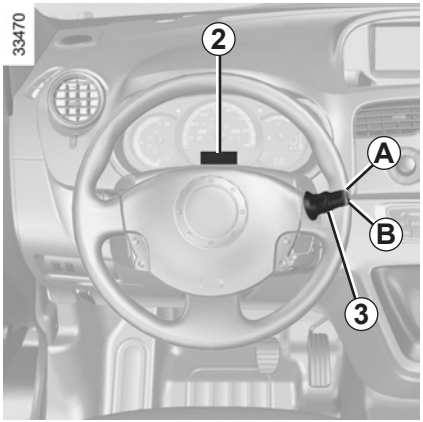

Programming the function start time

– To programme the start time, hold button ***B*** down on stalk ***3*** until the message “Settings menu” appears on the display ***2***;

– scroll through the menu using buttons ***A*** and ***B*** until you see the symbol;

– hold down button ***B*** on stalk ***3*** - the hours flash;

– press button ***A*** to adjust them;

– hold down button ***B*** on stalk ***3*** - the minutes flash;

– press button ***A*** to adjust them;

– confirm by pressing button ***B*** on stalk ***3***.

The symbol and the programmed time are displayed on the instrument panel.

Activating the function

– With the ignition on, control ***1*** on ;

– switch off the ignition;

– charge your vehicle;

The function triggers on the hour preceding the hour programmed in order to reach a comfortable temperature.

Automatically switching off the function

– about 30 minutes after the programmed time;

– if the charging socket is disconnected;

– if control ***1*** is not in position .

ADDITIONAL HEATING (1/2)

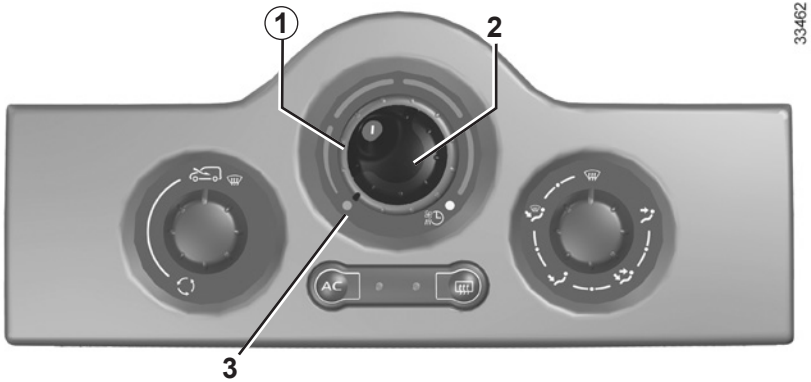

Depending on the vehicle, the additional heating is designed to heat the passenger compartment. Powered by a dedicated fuel tank (please see “Additional heating tank” in Section 1), this increases the comfort level without reducing vehicle range.

Switching on this additional heating deactivates other heating methods and the air-conditioning.

Conditions of use

– The engine must be running;

– switch ***4*** must be engaged;

– the ventilation control ***2*** should not be at position 0;

– the temperature control ***1*** should not be at the ”Stop heating” position ***3***.

– The fuel level should not be at minimum.

When the fuel reaches the minimum level, a warning light will come on on the instrument panel. After a few minutes of operation, a message on the instrument panel will tell you that the additional heating is switched off.

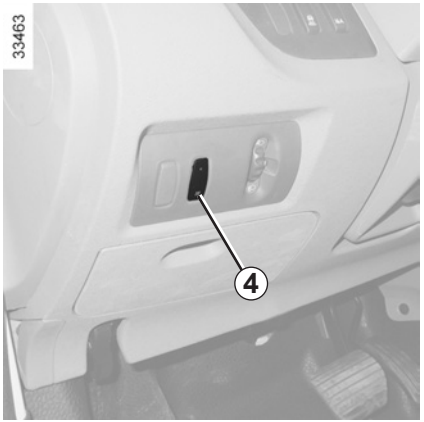

Operating principle

With the engine running, press switch ***4***.

The operation cuts out:

– when the ignition is switched off;

– after a few minutes, when the minimum fuel level has been reached;

Operating fault

If the additional heating does not switch on:

– start the vehicle;

– switch on the heating by pressing switch ***4***;

– wait for 5 minutes;

– turn off the heater;

– switch off your vehicle ignition;

– restart the operation 4 or 5 times.

If the additional heating still fails to operate, please contact an authorised dealer.

With the engine running, when you open the driver's door, a message will appear on the instrument panel along with a beep to tell you to switch off the additional heating.

Warnings concerning the use of additional heating

– Do not operate the additional heating in an enclosed location; exhaust fumes are poisonous.

– Do not park the vehicle or operate the additional heating in locations where flammable material or substances such as grass or leaves can come into contact with a hot exhaust system.

– Do not operate the additional heating when filling the fuel tank.

AIR CONDITIONING: information and advice on use.

Range

It is normal to notice an increase in energy usage when the air conditioning is operating.

Switch off the system when it is not required.

Advice for reducing consumption and helping to preserve the environment

Drive with the air vents on and the windows closed.

If the vehicle has been parked in the sun, open the doors for a few moments to let the hot air escape before starting the engine.

Maintenance

Refer to the Maintenance Document for your vehicle for the inspection frequency.

Operating faults

As a general rule, contact your approved Dealer in the event of an operating fault.

– **Reduction in de-icing, demisting or air conditioning performance.** This may be caused by the passenger compartment filter cartridge becoming clogged.

– **No cold air is being produced.** Check that the controls are set correctly and that the fuses are sound. Otherwise, switch off the system.

Presence of water under the vehicle.

After prolonged use of the air conditioning system, it is normal for water to be present under the vehicle. This is caused by condensation.

Do not open the refrigerant fluid circuit. The fluid may damage eyes or skin.

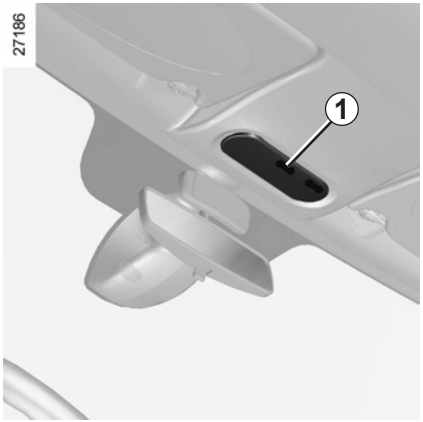

Courtesy lights

Pressing switch ***1*** gives:

– permanent lighting;

– intermittent lighting, which comes on when a door is opened. It goes out when the doors concerned are properly closed;

– immediate switching off.

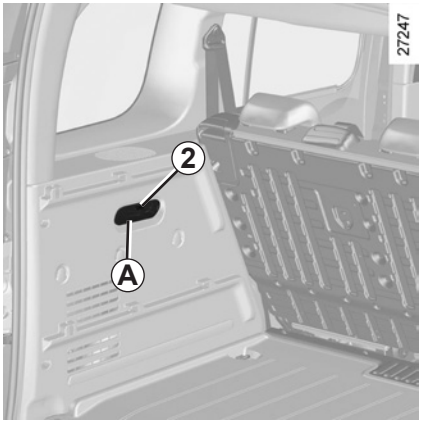

Luggage compartment light *A*

(depending on vehicle)

Tilt the switch ***2*** for permanent lighting.

Unlocking and opening the doors or luggage compartment switches on the timed courtesy lights.

Luggage compartment light *B*

(depending on vehicle)

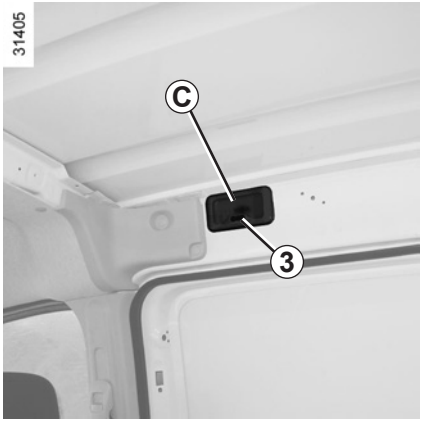

Sliding side door light *C*

(depending on vehicle)

Pressing switch ***3*** gives:

– permanent lighting;

– light when the sliding side door is opened. It goes out when the door in question is correctly closed;

– immediate switching off.

Special features

Depending on the vehicle, remote unlocking of the doors triggers timed lighting of the passenger compartment. If one of the front or rear doors is opened, the period for which the light is switched on will start again.

Then the courtesy light and the luggage compartment light dim and go out.

The lighting timer will cut out for various reasons:

– if a door has been open for 15 minutes;

– if all the doors have been closed for 15 seconds or 5 minutes, depending on the vehicle;

– when the ignition is switched on.

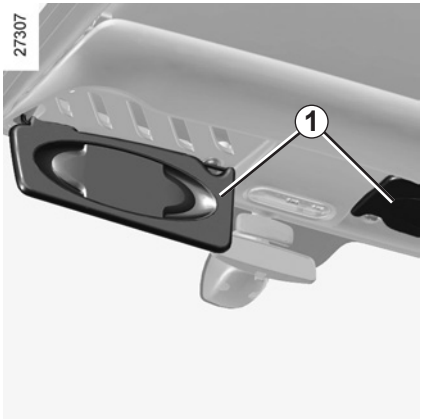

Front sun visor

Lower sun visor ***1***.

The clip can be used to hold motorway passes, etc..

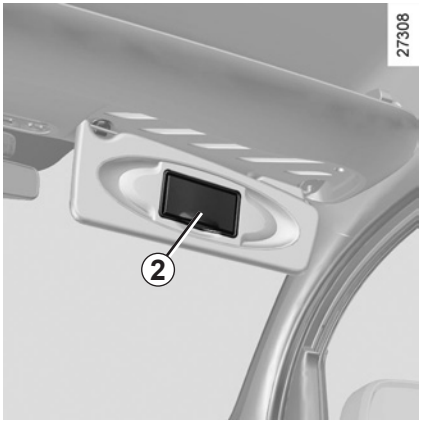

Courtesy mirror *2*
(passenger side)

If the sun visor is fitted with a courtesy mirror, it has a cover.

When driving, ensure the courtesy mirror cover is closed. Risk of injury.

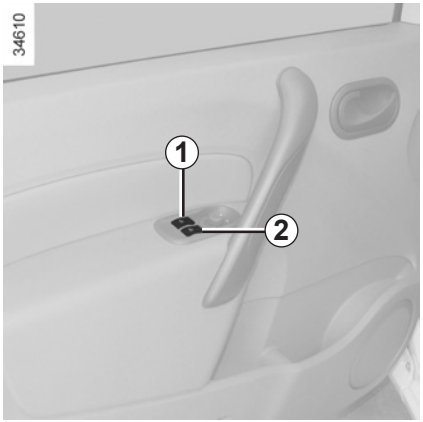

Electric windows

With the ignition on:

– press the switch for the window concerned to lower it to the desired height;

– lift the switch for the window concerned to raise it to the desired height.

From the driver's seat

Operate the switches as follows:

– ***1*** for the driver's side;

– ***2*** for the front passenger side.

From the front passenger seat

Operate switch ***3***.

Driver's responsibility

Never leave your vehicle with the remote control unit inside and never leave a child (or a pet) unsupervised, even for a short while.

The reason for this is that the child may endanger himself or others by starting the vehicle, activating equipment such as the electric windows, or locking the doors. If any part of the body becomes trapped, reverse the direction of the window immediately by pressing the relevant switch. Risk of serious injury.

One-touch electric window
(depending on vehicle)

The one-touch mode works in addition to the operation of the electric windows described previously.

It is fitted to the driver's window and is used for lowering only.

Briefly press switch ***1***: the window will open completely.

Pressing the switch again while the window is moving will stop its movement.

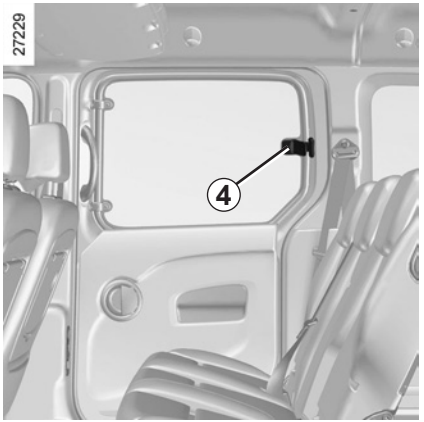

Half-opening window

To half-open the window, turn handle ***4*** in the direction of the arrow, then lock it by pushing the handle. When closing it, check that it is properly locked.

Avoid resting any objects against a half-open window: there is a risk that the electric window could be damaged.

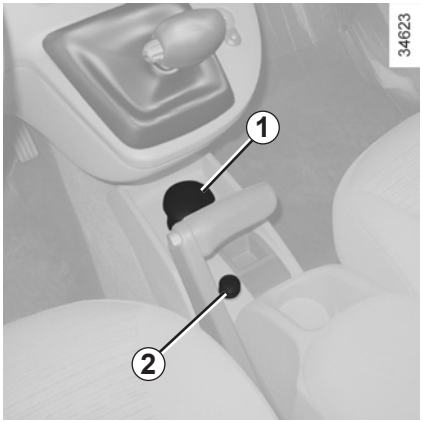

Removable ashtray *1*

This is a removable ashtray which can be placed in the cup holders.

Lift the cover to open.

To empty it, pull the assembly. The ashtray will come out of its housing.

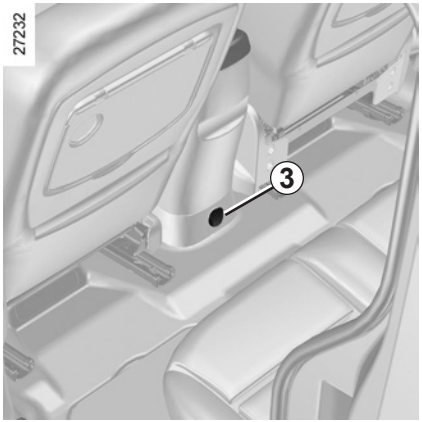

Cigarette lighter 2

With the ignition on, press it in. It will spring back with a click when it is ready. Pull it out to use.

After use, replace it without pushing it all the way in.

Accessories sockets

You may use the cigarette lighter recess ***2*** or one of sockets ***3*** (depending on the vehicle). They are designed for connecting accessories with a maximum power rating of 120 Watts (voltage: 12V) which have been approved by our Technical Department.

Depending on the 12V battery charge, the accessories socket may stop working.

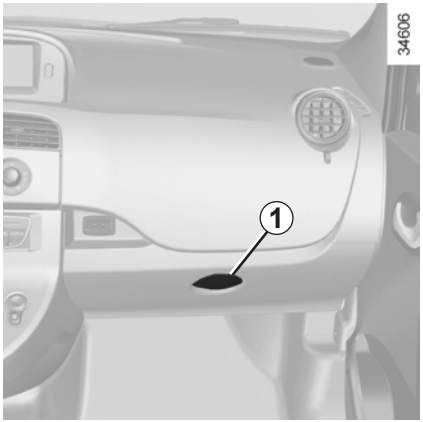

Glovebox

To open the glovebox, lift catch ***1***.

When turning corners, accelerating or braking, ensure that the receptacle being held by the cup holder is not dislodged.

There is a risk of burning if hot liquid escapes.

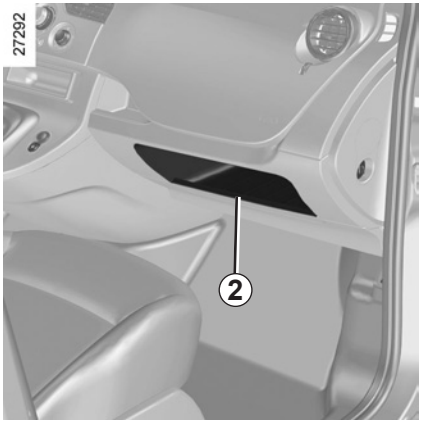

Dashboard storage compartment *2*

Centre console storage compartment *3*

To open, lift cover ***4***. It will store a 1.5 litre bottle.

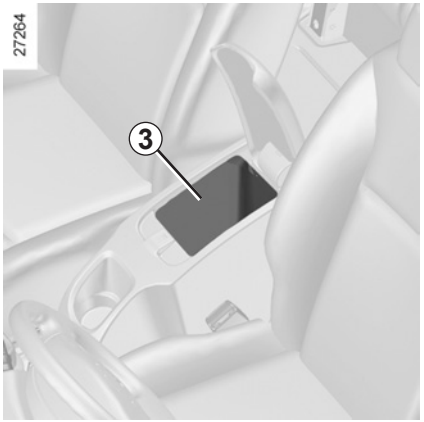

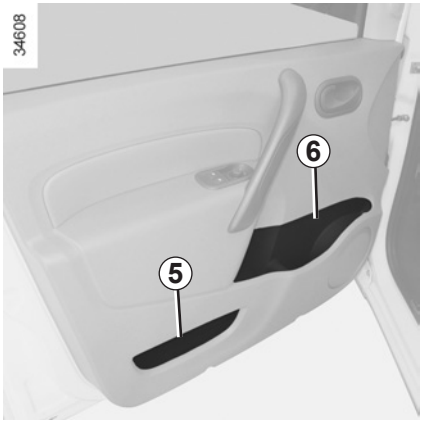

Front door storage compartments *5*

Bottle holders *6*

No object should be placed on the floor (in front of the driver). Such objects may slide under the pedals during sudden braking manoeuvres and obstruct their use.

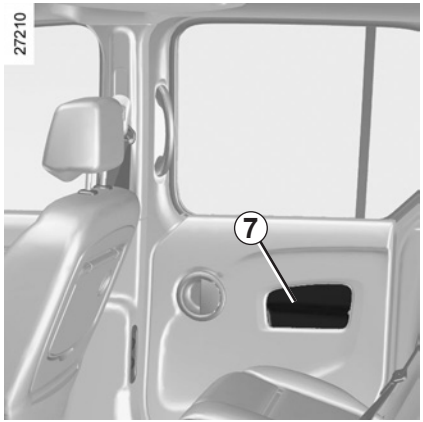

Sliding side door storage compartments *7*

Ensure that no hard, heavy or pointed objects are placed in the “open” storage compartments in such a way that they may fall onto passengers during sudden turning or braking.

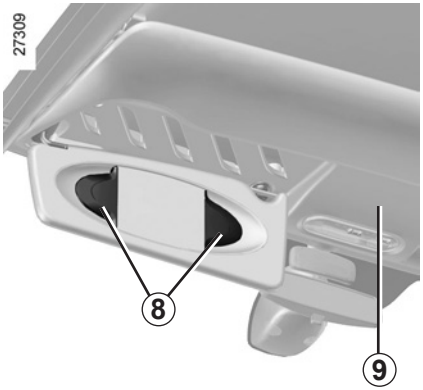

Clip *8*

This can be used for storing motorway tickets, cards, etc.

Sunglasses holder *9*

There is a dedicated storage compartment in the centre.

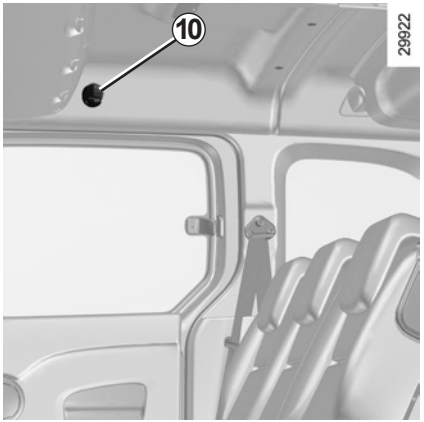

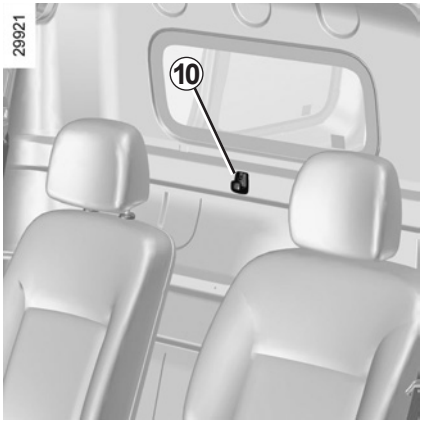

Clothes hook *10*

Depending on the vehicle, a hook may be located on the partition behind the front passenger seat.

For safety reasons, this hook may only be used to hang clothes.

NB: the maximum permitted load is 4 kg.

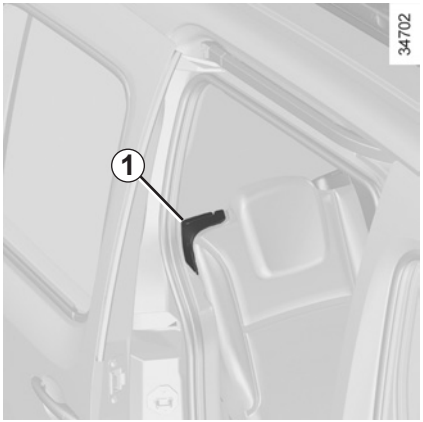

To fold down the seatback

Before moving the bench seat, make sure the front seats are pushed forward enough, that the rear seat belts are unfastened and that nothing will obstruct the manoeuvre.

Lower the rear headrests to storage position.

Pull lever ***1*** of the seatback you wish to fold down (on the right or left-hand side of the bench seat), and bring the seatback down.

To raise the seatback

Before raising the seatback, make sure there are no objects (water bottle, tool box etc.) which will prevent it from locking properly.

Raise the seatback and click it into position. Check that it is correctly locked.

Max. weight: 300 kg, evenly distributed.

For safety reasons, carry out any adjustments when the vehicle is not being driven.

When moving the rear bench seat, make sure the bench seat anchorage points are clean (they should be free from grit, cloths etc.).

When refitting the seatback, make sure it is correctly locked.

If using seat covers, make sure they do not prevent the seatback and seat base latches from locking in. Ensure that the seat belts and seat belt fasteners are correctly positioned.

Reposition the headrests.

30913

Use restriction

It is forbidden to drive with a seatback or a front seat folded down when there is a passenger occupying a rear seat.

For safety reasons, carry out any adjustments when the vehicle is not being driven.

To raise it
Slide it to the required height.

To lower it
Pull it towards you and slide it to the required height.

To remove it
Raise the headrest then press tabs ***1*** to release it.

To refit it
Press tab ***1*** and insert the rods into the holes, with the notches facing forwards.

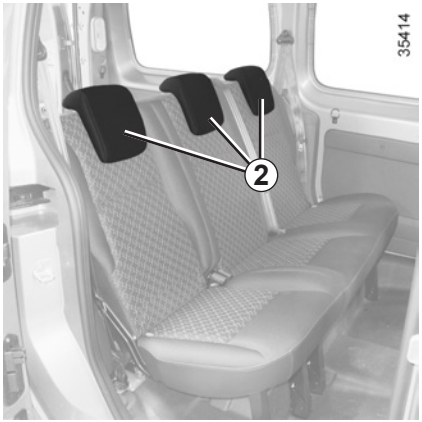

Storage position *2*
Pull it towards you and lower it completely.

The fully lowered headrest position is a storage position: it should not be in this position when a seat is occupied.

The headrest is a safety component; check that it is fitted and in the correct position.

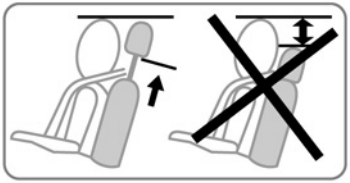

Child's convertible headrest

If fitted to the vehicle, the child headrest and booster cushion can only be installed on the rear side seats.

For fitting and use, refer to the equipment instructions.

TRANSPORTING OBJECTS IN THE LUGGAGE COMPARTMENT

Always position the objects transported so that the largest surface is against:

– the rear bench seatbacks, for normal loads;

– the front seats for maximum loads.

Always position the heaviest items directly on the floor.

Always position the heaviest items directly on the floor.

Use the lashing points on the floor of the luggage compartment, if these are fitted to the vehicle.

The luggage should be loaded in such a way that no items will be thrown forward and strike the occupants if the driver has to brake suddenly.

Fasten the rear seat belts, even if the seats are not occupied.

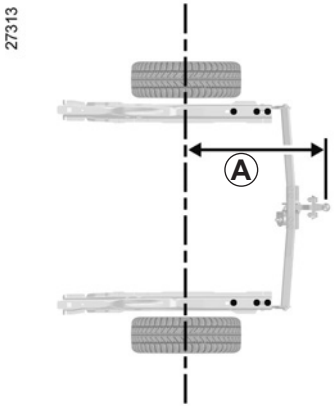

A = 776.5 mm.

Permissible nose weight, maximum permissible towing weight, braked and unbraked: refer to Section 6 “Weights”.

Refer to the manufacturer’s instructions for information on how to fit and operate the towing equipment.

Please keep these instructions with the rest of the vehicle documentation.

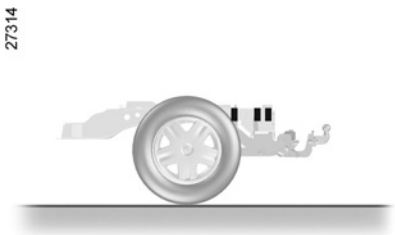

If the towbar ball obscures the registration plate or the rear fog lights, it should be removed when not in use.

In all cases, comply with local legislation.

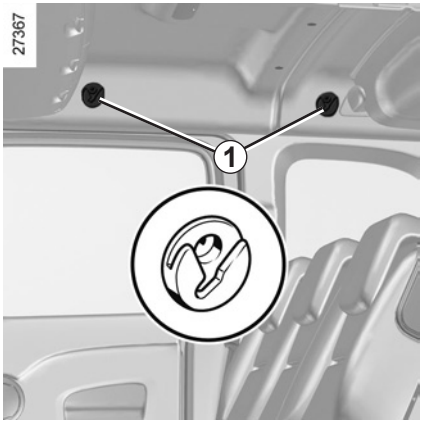

The luggage net
(depending on vehicle)

This is located in the luggage compartment.

It may be attached behind the front seats or behind the rear bench seat.

Hooks ***1*** may also be used to hang clothes.

The luggage net must not be used to restrain or hold objects.

Risk of injury

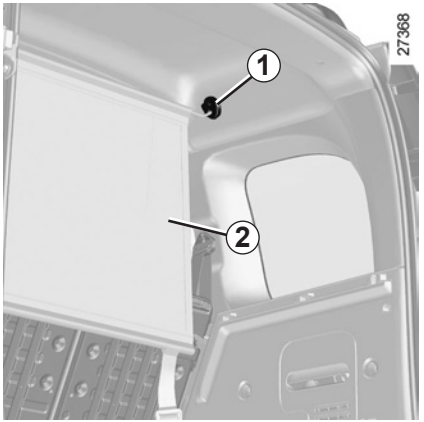

Positioning the net *2*

– Upper section: insert the tabs at the ends of the net in hooks ***1***;
– lower section: engage belts ***3*** in lashing rings ***4*** on the floor. Ensure that both forks of the lower hook are engaged;
– tighten the net using the tensioning units.

For more information, refer to the label sewn onto the net.

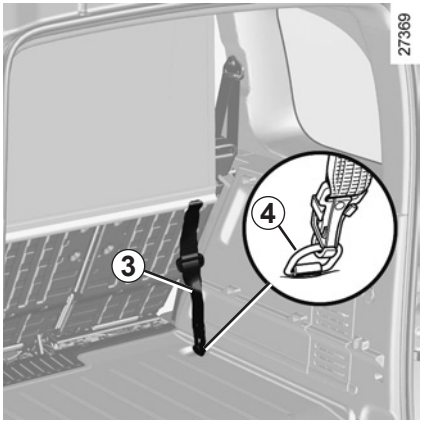

Luggage compartment anchorages (rings) ***4*** cannot be used if they are already being used to secure two other components (eg. luggage net + load in the luggage compartment or child seat + load in the luggage compartment).

Section 4: Maintenance

Bonnet 4.2
Levels 4.4
coolant 4.4
brake fluid. 4.5
windscreen washer reservoir 4.5
12 volt battery 4.6
Tyre pressure. 4.8
Bodywork maintenance 4.9
Interior trim maintenance. 4.11

Opening

Pull control ***1*** towards you.

Lift the bonnet by several centimetres and push lever ***2*** to the left.

Lift the bonnet up and release stay ***4*** from its holder ***5***. For your own safety, it is **very important** to fit the stay into its retainer ***3***. Check that it is correctly locked.

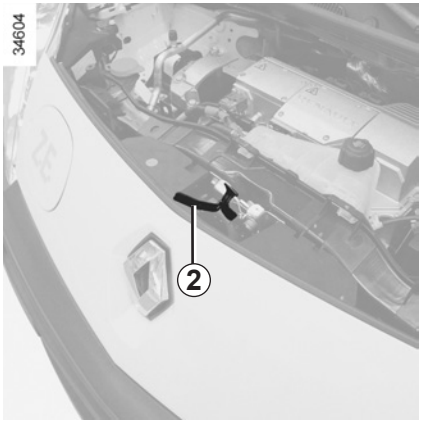

Do not do any work under the bonnet when the vehicle is charging or when the ignition is switched on.

In the event of an impact, even slight, against the radiator grille or bonnet, have the bonnet catch checked by an approved dealer as soon as possible.

After carrying out any work in the engine compartment, check that nothing has been left behind (cloth, tools, etc.).
Otherwise, this may lead to engine damage.

The engine may be hot when carrying out operations in close proximity. In addition, the engine cooling fan can come on at any moment.

Risk of injury.

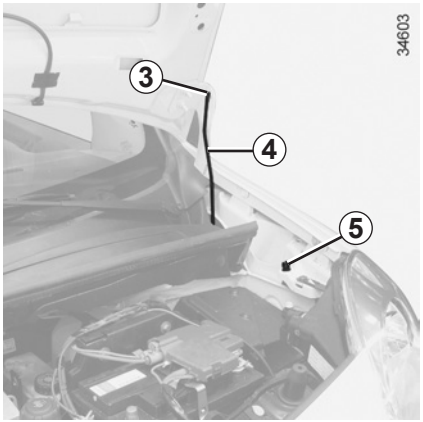

Closing

Check that nothing has been left in the engine compartment.

Release the stay and replace it in its holder ***5***.

Lower the bonnet and release it when it is approximately 20 cm from the closed position. It will latch automatically under its own weight.

Ensure that the bonnet is properly locked.

Check that nothing is preventing the catch from locking (gravel, cloth, etc.).

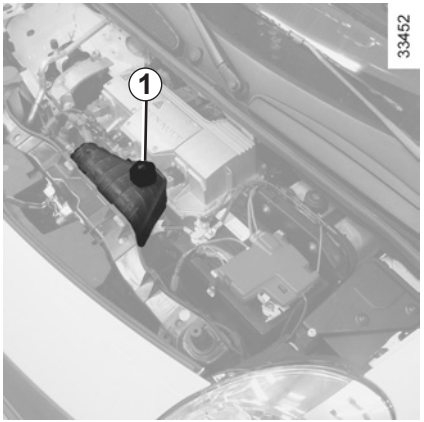

Coolant

The level is checked with the engine switched off and on flat ground. The level when **cold** must be between the “MIN” and “MAX” marks on coolant reservoir ***1*** and ***2*** measures.
Top this level up when **cold** before the “MINIMUM” mark is reached.

Do not do any work under the bonnet when the vehicle is charging or when the ignition is switched on.

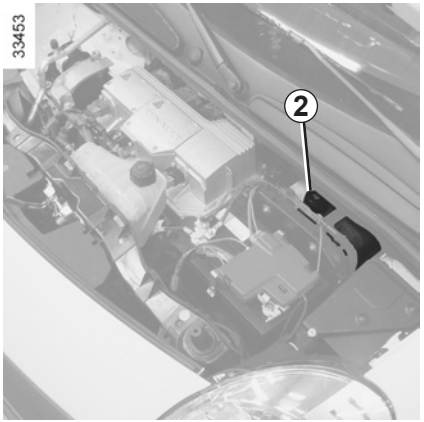

Checking intervals

Check the coolant level regularly (very severe damage is likely to be caused to the engine if it runs out of coolant).

If the level needs to be topped up, only use products approved by our Technical Department which ensure:

– protection against freezing;

– anticorrosion protection of the cooling system.

Replacement intervals

Refer to the Maintenance Document for your vehicle.

The engine may be hot when carrying out operations in close proximity. In addition, the engine cooling fan can come on at any moment.

Risk of injury.

No operations should be carried out on the cooling circuit when the engine is hot.

Risk of burns.

Consult your approved dealer at once if you notice an abnormal or repeated drop in any of the fluid levels.

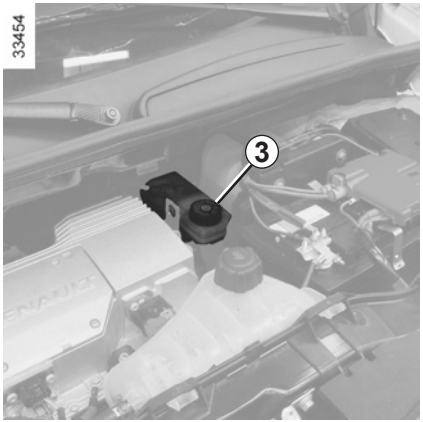

Brake fluid level

This should be checked frequently, and immediately if you notice even the slightest loss in braking efficiency.

The level should be read with the engine switched off and on level ground.

Level *3*

It is normal for the level to drop as the linings become worn, but it should never drop below the "**MINI**" warning line.

If you wish to check the disc and drum wear yourself, you should obtain the document explaining the checking procedure from our network or from the manufacturer's website.

Topping up

After any operation on the hydraulic circuit, a specialist must replace the fluid.

Only use fluids approved by our Technical Department (and taken from a sealed container).

Replacement intervals

Refer to the Maintenance Document for your vehicle.

Consult your approved dealer at once if you notice an abnormal or repeated drop in any of the fluid levels.

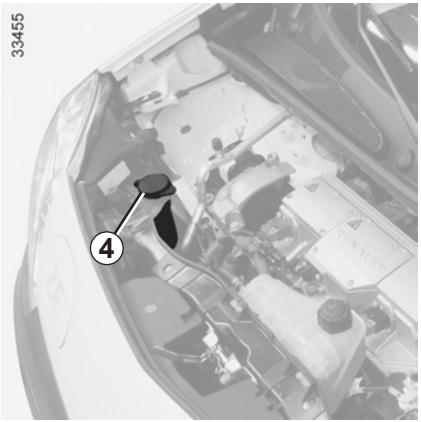

Windscreen washer reservoir

Topping up

– Open cap ***4***;

– fill until you can see the fluid;

– close the cap.

Liquid

Screen wash product (product with antifreeze in winter).

Jets

To adjust the height of the windscreen washer jets, use a tool such as a flatblade screwdriver.

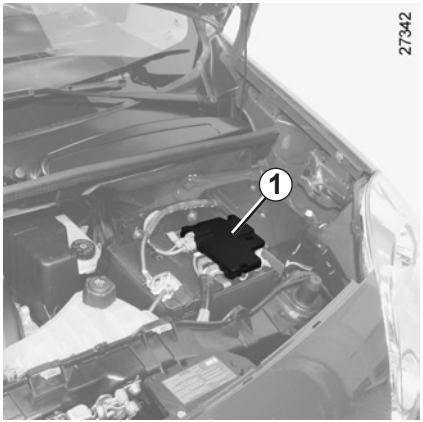

Maintenance

Refer to the Maintenance Document for your vehicle.

Handle the battery with care as it contains sulphuric acid, which must not come into contact with eyes or skin. If it does, wash the affected area with plenty of cold water. If necessary, consult a doctor.

Ensure that naked flames, red hot objects and sparks do not come into contact with the battery as there is a risk of explosion.

Never open the battery cover *1*.

The charge status of the 12V battery can decrease, especially if you use your vehicle:
- when the exterior temperature drops;
- after extended use of energy-consuming devices (radio etc.) with the engine switched off.

Replacement

As this operation is complex, we advise you to contact an approved Dealer.

Do not work on the 12 volt battery (charging, replacing, etc.):
- without switching off the ignition;
- if your traction battery is charging.

Please refer to the information on “Electric vehicle: charging” in Section 1.

Risk of serious injury.

The battery is a **specific type**, please ensure it is replaced with the same type. Consult an approved dealer.

Replacing the 12V battery

For your own safety, you **must** respect the replacement intervals (without exceeding them) as stated in the maintenance document.

12 VOLT BATTERY (2/2)

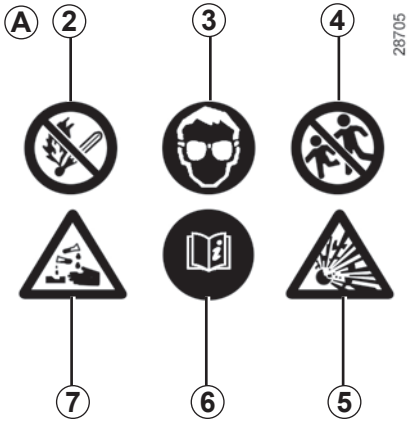

Label *A*

Observe the indications on the battery:

- ***2*** naked flames and smoking are forbidden;
- ***3*** eye protection required;
- ***4*** keep away from children;
- ***5*** explosive materials;
- ***6*** refer to the handbook;
- ***7*** corrosive materials.

Do not do any work under the bonnet when the vehicle is charging or when the ignition is switched on.

The engine may be hot during operations in close proximity. In addition, the engine cooling fan may start at any moment.

Risk of injury.

Label *A*

Open the driver's door to read it.

Tyre pressures should be checked when the tyres are cold.

If the tyre pressures cannot be checked when the tyres are **cold**, increase the pressures from **0.2** to **0.3** bar (or **3 PSI**). **Never deflate a hot tyre.**

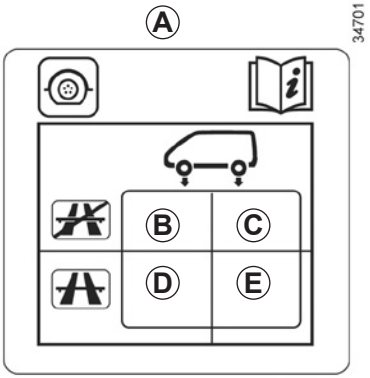

B : tyre pressures for the front wheels (non-motorway).

C : tyre pressures for the rear wheels (non-motorway).

D : tyre pressures for the front wheels (motorway).

E : tyre pressures for the rear wheels (motorway).

Special note concerning fully laden vehicles (Maximum Permissible All-Up Weight) **and towing a trailer:** the maximum speed must be limited to **60 mph** (80 km/h) and the tyre pressure increased by **0.2 bar.**

Please refer to the information on "Weights" in Section 6.

Tyre safety and use of snow chains: Refer to the information on "Tyres" in Section 5 for the servicing conditions and, depending on the version, the use of chains.

When they need to be replaced, only tyres of the same make, size, type and profile should be used.

They must: either be identical to those fitted originally or conform to those recommended by your authorised dealer.

BODYWORK MAINTENANCE (1/2)

A well-maintained vehicle will last longer. It is therefore recommended to maintain the exterior of the vehicle regularly.

Your vehicle has been treated with very effective anti-corrosion products. It is nevertheless subject to various outside influences.

Corrosive agents in the atmosphere
- atmospheric pollution (built-up and industrial areas),
- saline atmospheres (near the sea, particularly in hot weather),
- seasonal and damp weather conditions (e.g. road salt in winter, water from road cleaners, etc.).

Minor impacts

Abrasive action
Dust and sand in the air, mud, road grit thrown up by other vehicles, etc.

You should take a number of minor precautions in order to safeguard your vehicle against such risks.

What you should not do

Do not degrease or clean mechanical components (e.g. the engine compartment), underneath the body, parts with hinges (e.g. inside the doors) and painted plastic external fittings (e.g. bumpers) using high-pressure cleaning equipment or by spraying on products not approved by our Technical Department. Doing this could give rise to corrosion or operational faults.

Wash the vehicle in bright sunlight or freezing temperatures.

Do not scrape off mud or dirt without pre-wetting.

Allow dirt to accumulate on the exterior.

Allow rust to form following minor impacts.

Do not use solvents not approved by our Technical Department to remove stains as this could damage the paintwork.

Do not drive in snow or muddy conditions without washing the vehicle, particularly under the wheel arches and body.

You should

Wash your car frequently, **with the engine off**, with cleaning products recommended by the manufacturer (never use abrasive products). Rinse thoroughly beforehand with a jet:
- spots of tree resin and industrial grime;
- mud in the wheel arches and underneath the body which forms damp patches;
- **bird droppings**, which cause a chemical reaction with the paint that **rapidly discolours paintwork and may even cause the paint to peel off;**
  wash the vehicle **immediately** to remove these marks since it is impossible to remove them by polishing;
- salt, particularly in the wheel arches and underneath the body after driving in areas where the roads have been gritted.

Withdraw the vegetable falls (resin, film etc.) from the vehicle regularly.

Observe the vehicle stopping distances when driving on gravelled surfaces to prevent paint damage.

Repair, or have repaired quickly, areas where the paint has been damaged, to prevent corrosion spreading.

Remember to visit the body shop periodically in order to maintain your anti-corrosion warranty. Refer to the Maintenance Document.

Respect local regulations about washing vehicles (e.g. do not wash your vehicle on a public highway).

If it is necessary to clean mechanical components, hinges, etc., spray them with products approved by our Technical Department to protect them after they have been cleaned.

We have selected special products to care for your vehicle and you can obtain these from the manufacturer's accessory outlets.

Using a roller type car wash

Return the windscreen wiper stalk to the Park position (refer to the information on the "Windscreen washer, wiper" in Section 1). Check the mounting of external accessories, additional lights and mirrors, and ensure that the wiper blades are secured with adhesive tape. Remove the radio aerial mast if your vehicle is fitted with this equipment.
Remember to remove the tape and refit the antenna after washing.

Washing the vehicle

Never wash the engine compartment, the charging connection or the traction battery with a high-pressure jet.

This risks damaging the electric circuit.

Never wash the vehicle while it is charging.

Risk of electric shock and a risk to life.

Cleaning the headlights

As the headlights are made of plastic "glass", use a soft cloth or cotton wool to clean them. If this does not clean them properly, moisten the cloth with soapy water, then wipe clean with a soft damp cloth or cotton wool.
Finally, carefully dry off with a soft dry cloth.
Cleaning products containing alcohol must not be used.

Vehicles with a matte paint finish

This type of paint requires certain precautions.
Do not do the following
- use wax-based products (polishing);
- rub too hard;
- wash the vehicle in a roller-type car wash;
- wash the vehicle using a high-pressure device;
- attach stickers to the paintwork (risk of leaving marks).

You should do the following
Wash the vehicle by hand using plenty of water, using a soft cloth or a gentle sponge.

INTERIOR TRIM MAINTENANCE (1/2)

A well-maintained vehicle will last longer. It is therefore recommended to maintain the interior of the vehicle regularly.

A stain should always be dealt with swiftly.

Whatever type of stain is on the trim, use **cold** (or warm) **soapy water with natural soap**.

Detergents (washing-up liquid, powdered products, alcohol-based products) should not be used.

Use a soft cloth.

Rinse and soak up the excess.

Glass instrument panel

(e.g. instrument panel, clock, exterior temperature display, radio display, etc.)

Use a soft cloth (or cotton wool).
If this does not clean it properly, use a soft cloth (or cotton wool) slightly moistened with soapy water and then wipe clean with a soft damp cloth or cotton wool.
Finally, **carefully** dry off with a soft dry cloth.

Cleaning products containing alcohol must not be used under any circumstances.

Seat belts

These must be kept clean.
Use products selected by our Technical Department (Approved outlets) or warm, soapy water and a sponge and wipe with a dry cloth.
Detergents or dyes must not be used under any circumstances.

Textiles (seats, door trim, etc)

Vacuum-clean the textiles **regularly**.

Liquid stain

Use soapy water.

Dab lightly (never rub) with a soft cloth, rinse and remove the excess.

Solid or pasty stain

Carefully remove the excess solid or pasty material **immediately** with a spatula (working from the edges to the centre to avoid spreading the stain).
Clean as for a liquid stain.

Special instructions for sweets or chewing gum

Put an ice cube on the stain to solidify it, then proceed as for a solid stain.

For further recommendations for maintaining the interior, and/or for any unsatisfactory results, please see an authorised dealer.

Removal/replacing removable equipment originally fitted in the vehicle

If you need to remove equipment in order to clean the passenger compartment (for example, mats), always ensure that they are correctly refitted and are the right way around (the driver's mat should be fitted on the driver's side, etc.) and fit them with the components supplied with the equipment (for example, the driver mat should always be fixed using the pre-fitted mounting components).

With the vehicle stationary, ensure that nothing will impede driving (anything obstructing the pedals, heel wedged by the mat, etc.).

You should not:

You are strongly advised not to position objects such as deodorants, scents, etc. near air vents, as this could damage your dashboard trim.

You are strongly recommended not to use high-pressure or spray cleaning equipment inside the passenger compartment: use of such equipment could impair the correct functioning of the electrical or electronic components in the vehicle, or have other detrimental effects.

Section 5: Practical advice

Puncture 5.2
Emergency spare wheel 5.2
Tyre inflation kit 5.3
Tool kit 5.8
Wheels, trim. 5.9
Changing a wheel 5.10
Tyres 5.12
Headlights: changing bulbs 5.15
Fog lights: changing bulbs. 5.17
Rear lights: changing bulbs 5.18
Indicator lights: changing bulbs 5.21
Interior lights: changing bulbs 5.22
12 volt battery: breakdowns. 5.24
Fuses. 5.26
Wiper blades 5.28
Towing/breakdown. 5.30
Fitted audio equipment 5.33
Accessories 5.35
Radio frequency remote control unit: batteries 5.36
Operating faults 5.37

PUNCTURE/EMERGENCY SPARE WHEEL

In the event of a puncture, there is either an emergency spare wheel or tyre inflation kit available, depending on the vehicle (refer to the information in the following pages).

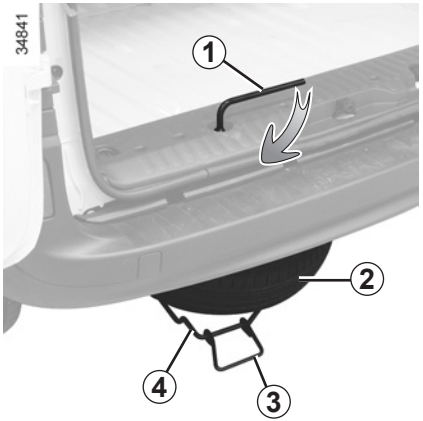

Emergency spare wheel *2*

This is stored in cage ***4*** under the floor at the rear of the vehicle.

If the emergency spare wheel has been stored for several years, have it checked by your Dealer to ensure that it is safe to use.

To access the emergency spare wheel

– Open the tailgate.

– Undo the nut with the wheelbrace ***1***.

– Detach the cage using handle ***3***.

– Release the emergency spare wheel.

To store the wheel in the cage

– Make sure the wheel is correctly positioned in the cage, valve facing down.

– Reposition the cage using handle ***3*** and retighten the nut using spanner ***1*** to refit the assembly.

– Make sure it is correctly locked.

The kit repairs tyres when tread ***A*** has been damaged by objects smaller than 4 mm. It cannot repair all types of puncture, such as cuts larger than 4 mm, or cuts in tyre sidewall ***B***.

Ensure also that the wheel rim is in good condition.

Do not pull out the foreign body causing the puncture if it is still in the tyre.

Do not attempt to use the inflation kit if the tyre has been damaged as a result of driving with a puncture.

You should therefore carefully check the condition of the tyre sidewalls before any operation.

Driving with underinflated, flat or punctured tyres can be dangerous and may make the tyre impossible to repair.

This repair is temporary

A tyre which has been punctured should always be inspected (and repaired, where possible) as soon as possible by a specialist.

When taking a tyre which has been repaired using this kit to be replaced, you must inform the specialist.

When driving, vibration may be felt due to the presence of the repair product injected into the tyre.

The kit is only approved for inflating the tyres of the vehicle originally equipped with the kit.

It must never be used to inflate the tyres of another vehicle, or any other inflatable object (rubber ring, rubber boat, etc.).

Avoid spillage on skin when handling the repair liquid bottle. If droplets do leak out, rinse them off with plenty of water.

Keep the repair kit away from children.

Do not dispose of the empty bottle in the countryside. Return it to your approved dealer or to a recycling organisation.

The bottle has a limited service life which is indicated on its label. Check the expiry date.

Contact an approved dealer to replace the inflation tube and repair product bottle.

Inflation kit *C*

In the event of a puncture, use the kit located in the glovebox.

Open the kit, remove caps ***1*** and ***3*** (it is **essential** not to remove the cap from the bottle) then screw bottle ***2*** to its support **3**.

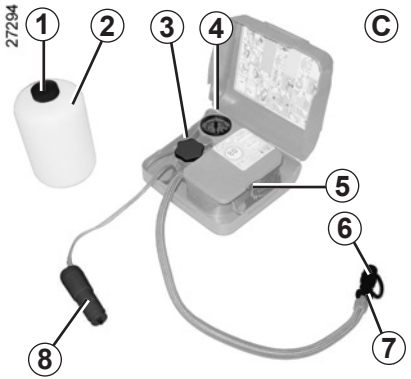

Key in "Accessories" position, handbrake engaged

– unscrew the valve cap on the wheel concerned and screw the inflation adapter ***6*** onto the valve;
– connect adapter ***8*** to the accessories socket on the dashboard of the vehicle;
– press switch ***5*** to inflate the tyre to the recommended pressure (check the label affixed to the edge of the driver's door);
– after a maximum of 5 minutes, stop inflating and read the pressure (on pressure gauge ***4***);

Note: while the bottle is emptying (approximately 30 seconds), pressure gauge ***4*** will briefly indicate a pressure of 6 bar, then the pressure will drop.

– adjust the pressure: to increase it, continue inflating with the kit, to reduce it, turn button ***7*** located on the inflation adapter.

If a minimum pressure of 1.8 bar is not reached after 15 minutes, repair is not possible; do not drive the vehicle but contact an approved dealer.

Before using this kit, park the vehicle at a sufficient distance from traffic, switch on the hazard warning lights, apply the handbrake, ask all passengers to leave the vehicle and keep them away from traffic.

If the vehicle is parked on the hard shoulder, you must warn other road users of your vehicle's presence with a warning triangle or with other devices as per the legislation applying to the country you are in.

Once the tyre is inflated correctly:

– stop using the kit;
– close the integrated cap on the bottle again;
– disconnect adapter ***8***;

Nothing should be placed around the driver's feet as such objects may slide under the pedals during sudden braking manoeuvres and obstruct their use.

– affix the driving recommendation label ***9*** to the dashboard where it can easily be seen by the driver;
– store the kit;
– at the end of this initial inflation operation, air will still escape from the tyre; you must drive a short distance in order to seal the hole;
– start immediately and drive at between 12 and 40 mph (20 and 60 km/h) in order to distribute the product evenly in the tyre and, after driving for 2 miles, stop and check the pressure;
– if the pressure is greater than 1.3 bar but less than the recommended pressure (refer to the label affixed to the edge of the driver's door), readjust it; otherwise, please contact an authorised dealer: the tyre cannot be repaired.

Note: after using the inflation kit, you should visit an approved Dealer to replace the inflation hose and the bottle of repair product.

Precautions when using the kit
The kit should not be operated for more than 15 consecutive minutes.

Please be aware that a poorly tightened or missing valve cap can make the tyres less airtight and lead to pressure loss.

Always use valve caps identical to those fitted originally and tighten them fully.

Following repair with the kit, do not travel further than 120 miles (200 km). In addition, reduce your speed and under no circumstances exceed 48 mph (80 km/h). The label, which you must affix in a prominent position on the dashboard, reminds you of this. Depending on the country or local legislation, a tyre repaired with the tyre pressure kit will need to be replaced.

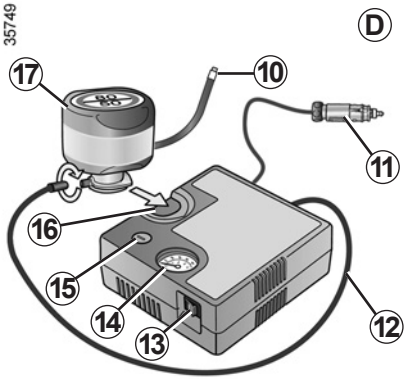

Inflation kit *D*

Depending on the vehicle, in the event of a puncture, please use the kit located in the glovebox.

Before using this kit, park the vehicle at a sufficient distance from traffic, switch on the hazard warning lights, apply the handbrake, ask all passengers to leave the vehicle and keep them away from traffic.

With the engine running and the parking brake applied,

– unroll the hose from the container;

– connect the compressor hose ***12*** to the container's inlet ***17***;

– depending on the vehicle, connect the container ***17*** to the compressor from the container recess ***16***;

– unscrew the valve cap on the relevant wheel and screw on the container's inflation adapter ***10***;

– adapter ***11*** **must** be connected to the vehicle accessories socket;

– press switch ***13*** to inflate the tyre to the recommended pressure (please refer to the information in the section on "Tyre pressure");

– after a maximum of **15** minutes, stop inflating and read the pressure (on pressure gauge ***14***).

Note: while the container is emptying (approximately 30 seconds), the pressure gauge ***14*** will briefly indicate a pressure of up to **6** bar. The pressure will then drop.

– adjust the pressure: to increase it, continue inflation with the kit; to reduce it, press button ***15***.

If a minimum pressure of 1.8 bar is not reached after 15 minutes, repair is not possible; do not drive the vehicle but contact an approved dealer.

If the vehicle is parked on the hard shoulder, you must warn other road users of your vehicle's presence with a warning triangle or with other devices as per the legislation applying to the country you are in.

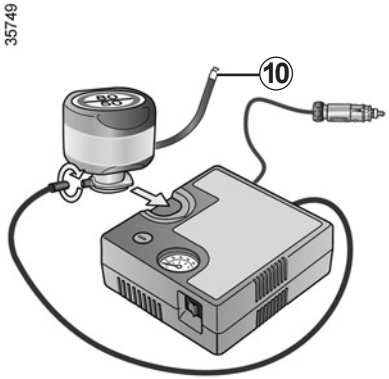

Once the tyre is correctly inflated, remove the kit: slowly unscrew the inflation adapter ***10*** to prevent any repair product from escaping and store the container in plastic packaging to prevent the product from escaping.

Nothing should be placed around the driver's feet as such objects may slide under the pedals during sudden braking manoeuvres and obstruct their use.

– Affix the driving recommendation label to the dashboard where it can easily be seen by the driver;
– Put the kit away.
– At the end of this initial inflation operation, air will still escape from the tyre. You must drive a short distance in order to seal the hole.
– Start immediately and drive at between 12 and 40 mph (20 and 60 km/h) in order to distribute the product evenly in the tyre and, after driving for 2 miles (3 km), stop and check the pressure.
– If the pressure is greater than 1.3 bar but less than the recommended pressure (refer to the label affixed to the edge of the driver's door), readjust it. Otherwise, please contact an authorised dealer: the tyre cannot be repaired.

Precautions when using the kit

The kit should not be operated for more than 15 consecutive minutes.

Please be aware that a poorly tightened or missing valve cap can make the tyres less airtight and may lead to pressure loss.

Always use valve caps identical to those fitted originally and tighten them fully.

Following repair with the kit, do not travel further than 120 miles (200 km). In addition, reduce your speed and under no circumstances exceed 48 mph (80 km/h). The sticker, which you must affix in a prominent position on the dashboard, reminds you of this.
Depending on the country or local legislation, a tyre repaired with the inflation kit may need to be replaced.

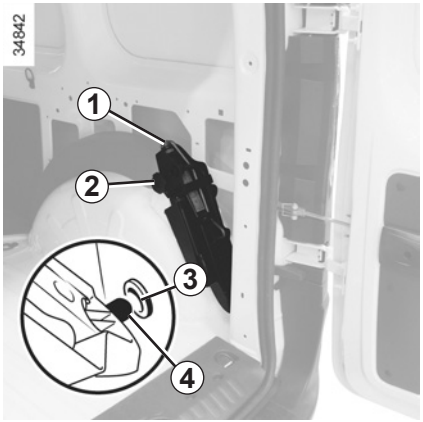

To remove the tool kit *1* from the luggage compartment
Depending on the vehicle, it may be stored behind a flap. Open it. Undo wheel ***2*** and pull the tool kit towards you.

To reposition the tool kit position tool kit pin ***4*** into housing ***3***. Make sure the kit is correctly positioned so as to be able to tighten wheel ***2***.

The tools included in the tool kit depend on the vehicle.

Retaining belt (depending on vehicle)
After use, reposition the strap making sure that it retains all components in the tool kit.

Wheelbrace *5*
To undo the wheel bolt and the emergency spare wheel cage nut.

Guide bolt *6* (depending on vehicle)
To finish loosening or starting to tighten the wheel bolts.

Hubcap tool *9*
To remove the wheel trims.
Jack *7*
Refer to Section 5 “Changing a wheel”.

Towing hitch *8*
Refer to the information on the “Towing: breakdown” in Section 5.

Do not leave the tools unsecured inside the vehicle as they may come loose under braking. After use, check that all the tools are correctly clipped into the tool kit, then position it correctly in its housing: there is a risk of injury.

If wheel bolts are supplied in the tool kit, only use these bolts for the emergency spare wheel: refer to the label affixed to the emergency spare wheel.

The jack is designed for wheel changing purposes only. Under no circumstances should it be used for carrying out repairs underneath the vehicle or to gain access to the underside of the vehicle.

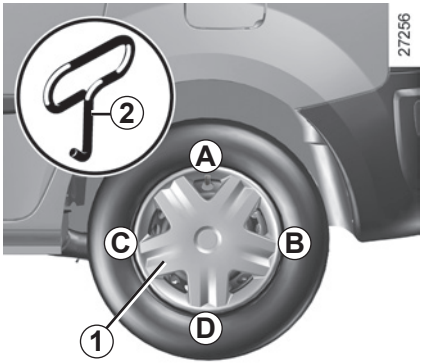

Wheel trim *1*
(concealed wheel bolts)

Remove it using hubcap tool ***2*** (located under the tool kit), by pushing the hook into the opening located near the valve (to reach the metal retaining wire located behind the wheel trim).

To refit it, align it with the valve. Push the retaining hooks, starting with side ***A*** on the valve side, then ***B*** and ***C*** and finish with the side opposite the valve ***D***.

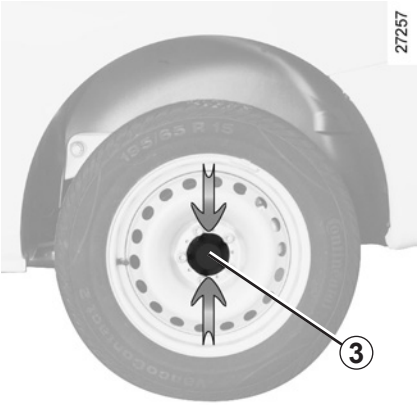

Wheel trim *3*
(exposed wheel bolts)

To remove it without removing the wheel, press it at the points indicated by the arrows.

Turn it so that the retaining brackets holding it in place behind the wheel bolts are released.

To refit the hubcap, proceed in reverse order.

Switch on the hazard warning lights.

Keep the vehicle away from traffic and on a level surface where it will not slip (if necessary, place a solid support under the jack base).

Apply the handbrake and engage position **P**.

Ask all the passengers to leave the vehicle and keep them away from traffic.

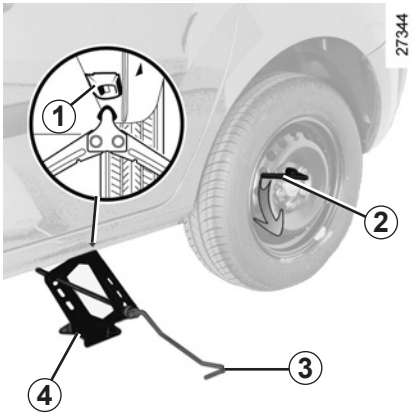

If necessary, remove the wheel trim.

Use the wheelbrace ***2*** to slacken off the wheel bolts. Position it so as to be able to push from above.

Start extending jack ***4*** by hand, turning the handle.

Position the jack head against jacking point ***1*** closest to the wheel concerned and, depending on the vehicle, the area marked by a triangle. If the ground is soft, place a plank of wood under the baseplate.

Continue tightening to position the baseplate on the ground correctly. Turn handle ***3*** on the jack to lift the wheel off the ground.

If the vehicle is parked on the hard shoulder, you must warn other road users of your vehicle's presence with a warning triangle or with other devices as per the legislation applying to the country you are in.

To prevent any risk of injury or damage to the vehicle, raise the jack until the wheel you are replacing is a maximum of 3 centimetres off the ground.

CHANGING A WHEEL (2/2)

Undo the bolts and take off the wheel. For vehicles fitted with alloy wheels, use the guide bolt located in the tool kit to finish loosening and start tightening the bolts.

Fit the emergency spare wheel on the central hub and turn it to align the mounting holes in the wheel and the hub.

Tighten the bolts and lower the jack.

If bolts are supplied with the emergency spare wheel, only use these bolts for the emergency spare wheel.

Tighten the bolts, checking that the wheel is correctly positioned on its hub and unscrew the jack.

With the wheels on the ground, tighten the bolts as fully as possible and check the tightness as soon as possible (tightening torque 110 Nm).

Anti-theft bolts

If you use anti-theft bolts, fit these nearest the valve (wheel trim may not be able to fit).

If you have a puncture, replace the wheel as soon as possible.

A tyre which has been punctured should always be inspected (and repaired, where possible) by a specialist.

Tyre and wheel safety

The tyres are the only contact between the vehicle and the road, so it is essential to keep them in good condition.

You must make sure that your tyres conform to local road traffic regulations.

When they need to be replaced, only tyres of the same make, size, type and profile should be used.

Tyres fitted to the vehicle should either be identical to those fitted originally or conform to those recommended by your approved dealer.

Maintaining the tyres

The tyres must be in good condition and the tread form must have sufficient depth; tyres approved by our Technical Department have tread wear indicators ***1*** which are **indicators moulded into the tread at several points**.

When the tyre tread has been eroded to the level of the warning strips, **they become visible 2:** it is **then** necessary to replace your tyres because the tread profile is no more **than 1.6 mm deep and this causes poor road holding on wet roads**.

An overloaded vehicle, long journeys by motorway, particularly in very hot weather, or continual driving on poorly surfaced minor roads will lead to more rapid tyre wear and affect safety.

Incidents which occur when driving, such as striking the kerb, may damage the tyres and wheel rims, and could also lead to misalignment of the front or rear axle geometry. In this case, have the condition of these checked by an approved dealer.

Tyre pressures

Respect the tyre pressures (including the emergency spare wheel). Check them at least once a month and before a long journey (refer to the label on the edge of the driver's door).
Please refer to the information on "Tyre pressures" in Section 4.

Incorrect tyre pressures lead to abnormal tyre wear and unusually hot running. These are factors which may seriously affect safety and lead to:

– poor road holding;

– risk of bursting or tread separation.

The pressure depends on the load and the speed of use. Adjust the pressures according to the conditions of use (refer to the information on "Tyre pressures").

Pressures should be checked when the tyres are cold; ignore higher pressures which may be reached in hot weather or following a fast journey.

If tyre pressures cannot be checked when the tyres are **cold,** the normal pressures must be increased by **0.2** to **0.3** bar (or **3 PSI**).

Never deflate a hot tyre.

Please be aware that a poorly tightened or missing valve cap can make the tyres less airtight and lead to pressure loss.

Always use valve caps identical to those fitted originally and tighten them fully.

Fitting new tyres

For safety reasons, this operation must be carried out by a specialist.

Fitting different tyres may change your vehicle as follows:

– may mean that your vehicle no longer conforms to current regulations;

– it may change the way it handles when cornering;

– it may cause the steering to be heavy;

– It may affect the use of snow chains.

Changing wheels around

This practice is not recommended.

Emergency spare wheel

Refer to the information on the "Emergency spare wheel" and instructions on "Changing a wheel" in Section 5.

Use in winter

– **Chains**

For safety reasons, fitting snow chains to the rear axle is strictly forbidden.

Chains must not be fitted to tyres which are larger than those originally fitted to the vehicle.

Chains may only be fitted to tyres of the same size as those originally fitted to **your vehicle.**

Only certain chains can be fitted to tyres. Consult an approved Dealer.

– **Snow or winter tyres**

We would recommend that these be fitted to **all four wheels** to ensure that your vehicle retains maximum grip.

Note: be aware that these tyres may sometimes have:

– a direction of travel ;

– a maximum speed index which may be lower than the maximum speed of your vehicle.

– **Studded tyres**

This type of equipment may only be used for a limited period and as laid down by local legislation.

It is necessary to observe the speed specified by current legislation.

These tyres must, at a minimum, be fitted to the two front wheels.

NB:

The use of snow tyres, winter tyres or studded tyres significantly reduces the vehicle range.

In all cases, we would recommend that you contact an approved dealer who will be able to advise you on the choice of equipment which is most suitable for your vehicle.

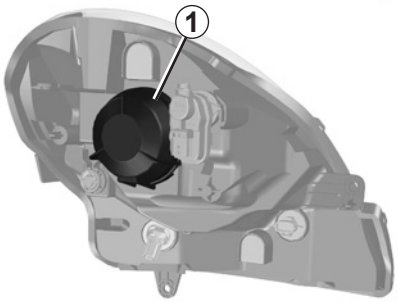

Dipped beam/main beam headlights

Turn cover ***1*** a quarter of a turn to unlock it.

Disconnect the wiring.

Remove rubber protector ***2***.

Unclip spring ***3*** to remove the bulb.

Do not do any work under the bonnet when the vehicle is charging or when the ignition is switched on.

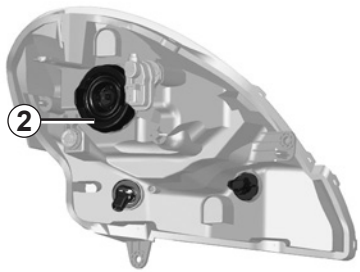

Bulb type: H4
It is essential to use 55W anti UV bulbs to prevent damage to the lights' plastic glass.

Do not touch the bulb glass. Hold it by its base.
To refit it, carry out the above operations in reverse order.
Ensure that rubber protector ***2*** is repositioned correctly so that the three strips can be seen.

The bulbs are under pressure and can break when replaced.

Risk of injury.

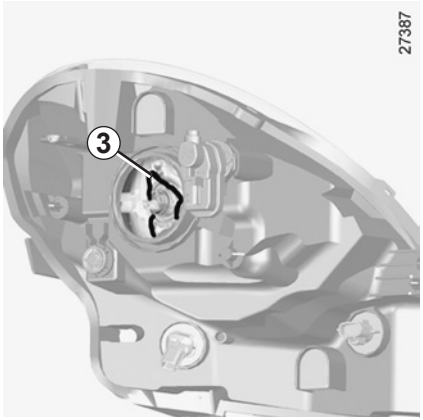

To comply with local legislation, or as a precaution, you can obtain an emergency kit containing a set of spare bulbs and fuses from an approved Dealer.

The engine may be hot during operations in close proximity. In addition, the engine cooling fan may start at any moment.

Risk of injury.

Front side light

Open flap ***A*** under the wheel arch. Turn the wheel in towards the vehicle to facilitate access to the flap.

Turn bulb holder ***4*** to unlock it and remove it from its location, without disconnecting the wiring. Replace the bulb.

Bulb type: P21/5W

To refit it, carry out the above operations in reverse order.

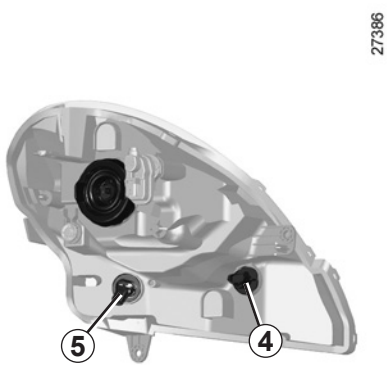

Direction indicator lights

Open flap ***A*** in the wheel arch. Turn the wheel in towards the vehicle to facilitate access to the flap.

Turn bulb holder ***5*** to unlock it and remove it from its location, without disconnecting the wiring. Replace the bulb.

Bulb type: PY21W

To refit it, carry out the above operations in reverse order.

Ensure that the flap is properly secured when refitting.

The bulbs are under pressure and can break when replaced.
Risk of injury.

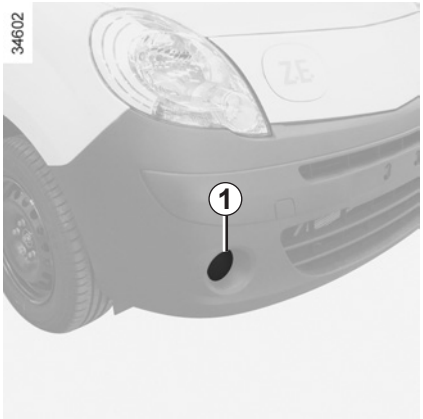

Front fog lights *1*

As it is necessary to remove parts or components (front bumper), **you are advised to have your bulbs replaced by an approved dealer**.
Bulb type: H11

The engine may be hot during operations in close proximity. In addition, the engine cooling fan may start at any moment.

Risk of injury.

Additional lights

If you wish to fit your car with fog lights or long range headlights, contact an authorised dealer.

The bulbs are under pressure and can break when replaced.

Risk of injury.

Any operation on (or modification to) the electrical system must be performed by an approved dealer since an incorrect connection might damage the electrical equipment (harness, components and in particular the alternator). In addition, your Dealer has all the parts required for fitting these units.

Rear fog lights *2*

As it is necessary to remove parts or components (rear bumper), **you are advised to have your bulbs replaced by an approved dealer.**

Bulb type: P21 W

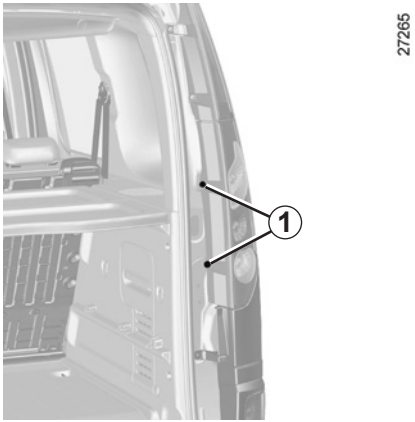

Rear lights

Depending on the vehicle, open the hinged doors or the tailgate.

Undo bolts ***1*** using a Torx tool.

Unclip the lower section, then the upper section of the light by pulling it towards you.

Pull tabs ***2*** to unclip bulb holders ***3***.

Replace the bulb, then proceed in the reverse order to refit the bulb.

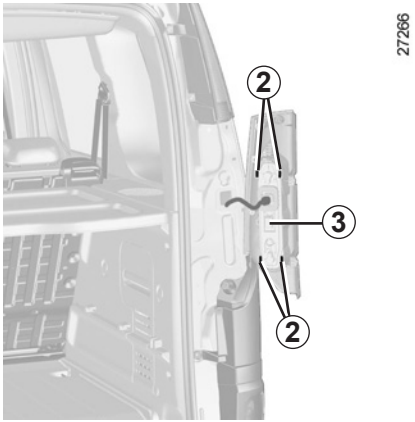

Bulb type

4 **Indicator**
Pear-shaped, bayonet type bulb **P Y21W**.

5 **Side and brake light**
Pear-shaped, bayonet type bulb with two filaments **P 21/5W**.

6 **Reversing light** (right-hand side or, depending on the vehicle, on both sides)
Pear-shaped, bayonet type bulb **P 21W**.

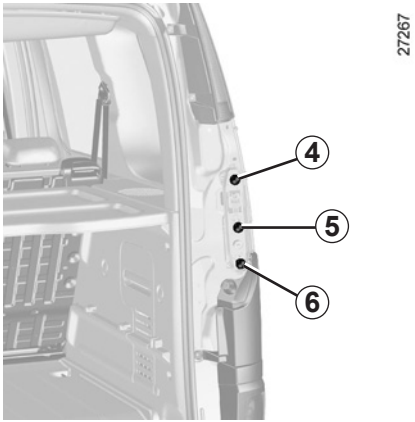

The bulbs are under pressure and can break when replaced.

Risk of injury.

High-level brake light

– **Version with tailgate:** it is located above the rear screen, in the centre.

– **Version with hinged doors:** it is located above the rear screen, on the left-hand door.

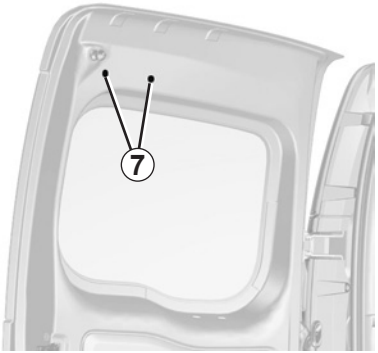

Remove the two plastic blanking covers ***7*** from the inside. Unclip the light using a screwdriver, by pressing in the metal clip housings.

Remove light ***8*** from the outside. Replace the bulb without disconnecting the wiring.

Bulb type: W16W

For refitting, proceed in the reverse order to removal.

Check the tabs are correctly locked in position.

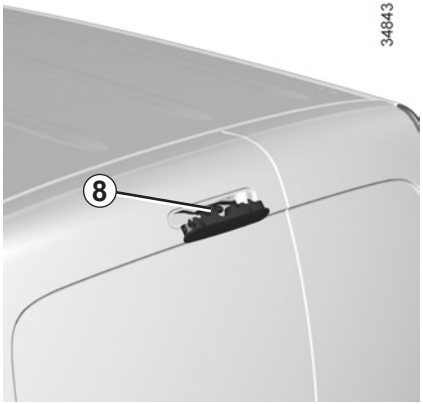

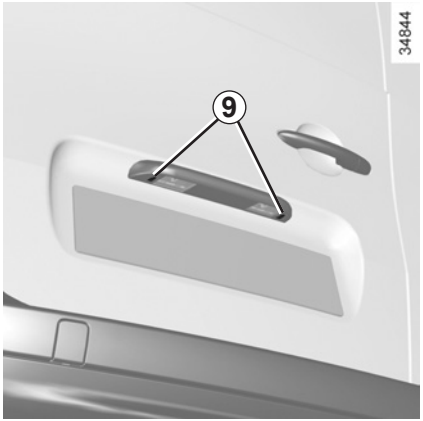

Number plate light

Undo two bolts ***9*** using a Torx tool.

Release the light ***10*** to access bulbs.

Bulb type: W5W.

Replace the bulbs, then fit the light in position.

INDICATOR LIGHTS: changing bulbs

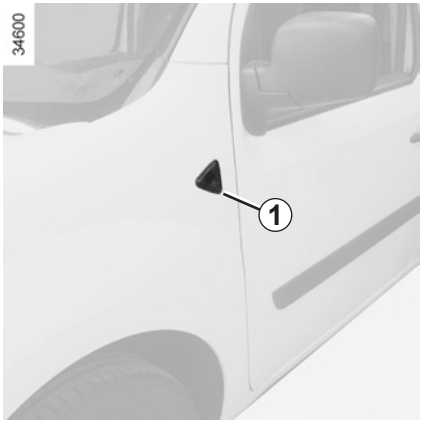

Unclip indicator light ***1*** on the door side, using a flat-blade screwdriver type tool.

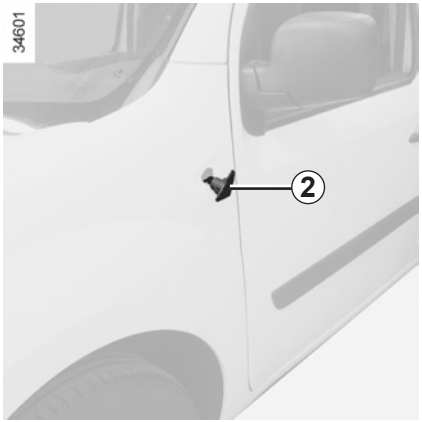

Turn the bulb holder ***2*** a quarter of a turn and take out the bulb.

Bulb type: WY5W.

Replace the bulb and refit the indicator light.

INTERIOR LIGHTS: changing bulbs (1/2)

Passenger compartment lights

Remove the lens ***1*** using a tool such as a flat-blade screwdriver.

Pull the bulb ***2*** to remove it from its housing.

Bulb type 2: W6W
Rear courtesy light bulb type: W6W

Replace the bulbs and replace the lens.

INTERIOR LIGHTS: changing bulbs (2/2)

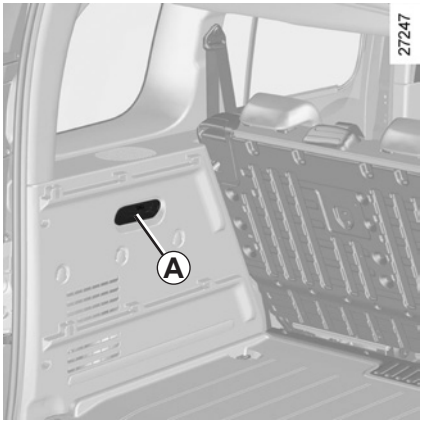

Light *A*

Remove the lens using a tool such as a flat-blade screwdriver.

Pull the bulb to remove it from its housing.

Bulb type A: W5W

Replace the bulb and refit the lens.

Light *B* or *C*

Remove the lens using a tool such as a flat-blade screwdriver.

Pull the bulb to remove it from its housing.

Bulb type *B* or *C* : W6W

Replace the bulb and refit the lens.

To avoid all risk of sparks:

- Switch off the vehicle ignition.
- Ensure that any electrical consumers (courtesy lights, etc.) are switched off before disconnecting or reconnecting the battery.
- When charging, stop the charger before connecting or disconnecting the battery.
- Do not place metal objects on the battery to avoid creating a short circuit between the terminals.
- Make sure that you reconnect the battery terminals after refitting.

Special procedures may be required to charge some batteries. Contact your approved dealer.

Avoid all risk of sparks which may cause an immediate explosion, and charge the battery in a well-ventilated area. Risk of serious injury.

Connecting a battery charger

The battery charger must be compatible with a battery with nominal voltage of 12 volts.

Before disconnecting the battery, check that:

- the ignition is switched off;
- the gear control is in position **P** (please see the information on “Gear control”;
- the charging cable is disconnected.

Do not work on the 12 volt battery (charging, replacing, etc.):

- without switching off the ignition;
- if your traction battery is charging.

Please refer to the information on “Electric vehicle: charging” in Section 1.

Risk of serious injury.

Disconnect the leads connected to both battery terminals, **starting with the negative terminal**.

Follow the instructions given by the manufacturer of the battery charger you are using.

Handle the battery with care as it contains sulphuric acid, which must not come into contact with eyes or skin. If it does, wash the affected area with plenty of cold water. If necessary, consult a doctor.

Ensure that naked flames, red hot objects and sparks do not come into contact with the battery as there is a risk of explosion.

The engine may be hot when carrying out operations in close proximity. In addition, the engine cooling fan can come on at any moment.

Risk of injury.

Starting the vehicle using the battery from another vehicle

If you have to use the battery from another vehicle to start, obtain suitable jump leads (with a large cross section) from an approved dealer or, if you already have jump leads, ensure that they are in perfect condition.

The two batteries must have an identical nominal voltage: 12 volts. The battery supplying the current should have a capacity (amp-hours, Ah) which is at least the same as that of the discharged battery.

Ensure that there is no risk of contact between the two vehicles (risk of short circuiting when the positive terminals are connected) and that the discharged battery is properly connected. Switch off your vehicle ignition.

Start the motor of the vehicle supplying the current and run it at an intermediate engine speed.

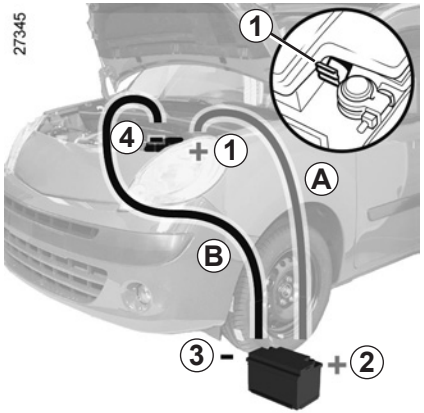

Connect the positive cable (+) ***A*** to the (+) terminal ***1*** of the discharged battery, then to the (+) terminal ***2*** of the battery supplying the current.

Connect the negative cable (–) ***B*** to the (–) ***3*** terminal of the battery supplying the current and then to the (–) ***4*** terminal of the discharged battery.

Check that there is no contact between the cables ***A*** and ***B*** and that the (+) cable ***A*** is not touching any metal parts on the vehicle supplying the current.

Start the motor, then disconnect cables ***A*** and ***B*** in reverse order (***4-3-2-1***).

Do not use your electric vehicle to restart the 12 volt battery in a conventional vehicle. The 12 volt electric power of an electric vehicle is not enough to perform such an operation.
Risk of damage to vehicle

Special procedures may be required to charge some batteries. Contact your approved dealer.

Avoid all risk of sparks which may cause an immediate explosion, and charge the battery in a well-ventilated area. Risk of serious injury.

Fuse box

If any electrical component does not work, check the condition of the fuses.

Unclip cover ***A***.

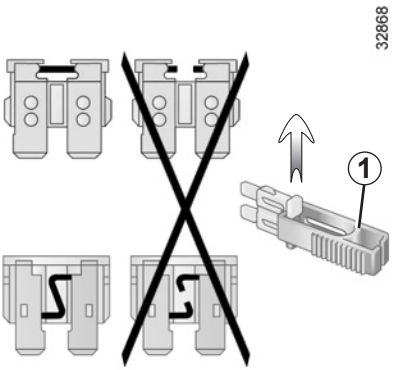

Tweezers *1*

Remove the fuse using tweezers ***1***, located at the back of cover ***A***.

To remove the fuse from the tweezers, slide the fuse to the side.

To identify the fuses, refer to the fuse allocation label (shown on the following page).

It is not advisable to use the free fuse locations.

Check the fuse in question and **replace it**, **if necessary, with a fuse of the same rating**.

If a fuse is fitted where the rating is too high, it may cause the electrical circuit to overheat (risk of fire) in the event of an item of equipment using an excessive amount of current.

To comply with local legislation, or as a precaution, you can obtain an emergency kit containing a set of spare bulbs and fuses from an approved Dealer.

FUSES (2/2)

Allocation of fuses (the presence of fuses DEPENDS ON THE EQUIPMENT LEVEL OF THE VEHICLE)

Symbol	Allocation
	Interior lighting, electric door mirrors, rain/light sensors, heating and air conditioning system.
	Horn
	Rear fog lights, warning
	Electric windows
	Heated seats
	Rear screen wiper
	Passenger compartment heating system
ADAPT	Location reserved for additional equipment.
STOP	Brake lights

Symbol	Allocation
	Radio, display, heating and air conditioning system, heated seat
	Instrument panel
	Accessories socket, cigar lighter
	Consumer cut-out (radio, navigation system, display, alarm)
	Heated door mirrors
	Front/rear windscreen washers
	Central door locking
ABS	ABS

Some functions are protected by fuses located in the engine compartment.

However, because of their reduced accessibility, **you are advised to have these fuses replaced by an approved Dealer.**

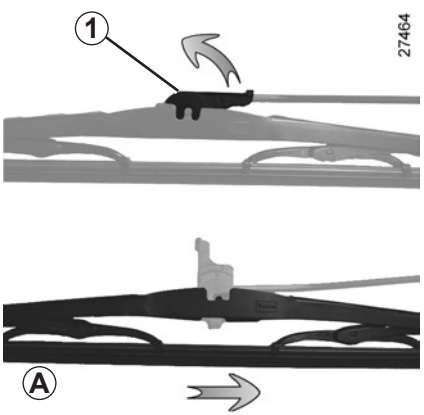

Replacing windscreen wiper blades

With the ignition off, lift wiper arm ***A*** slightly.

Pull tab ***1*** upwards.

Move the blade in the direction of the arrow.

For refitting, proceed in the reverse order and ensure that the blade is correctly clipped on.

Check the condition of the wiper blades. You are responsible for their service life:

– clean the blades, windscreen and rear screen regularly with soapy water;

– do not use them when the windscreen or rear screen are dry;

– free them from the windscreen or rear screen when they have not been used for a long time.

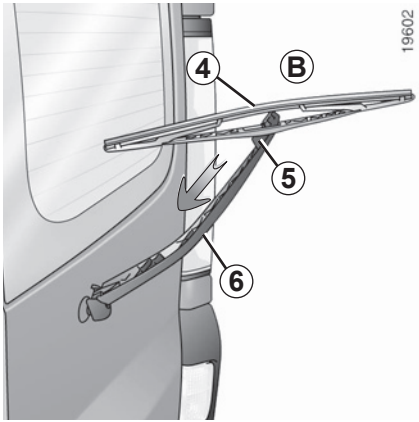

Replacing the rear screen wiper blade

Hinged door versions *B*

– **With the ignition off,** lift the wiper arm ***6***.

– Turn blade ***4***.

– Press tab ***5***.

– Pull the blade to release it (arrow).

For refitting, proceed in the reverse order and ensure that the blade is correctly clipped on.

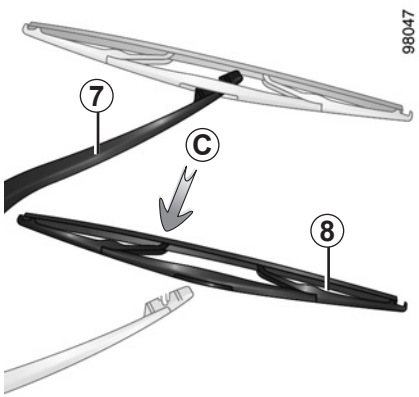

Tailgate versions *C*

– **With the ignition off,** lift wiper arm ***7***.

– Pivot blade ***8*** until some resistance is met.

– Pull the blade to release it (arrow).

For refitting, proceed in the reverse order and ensure that the blade is correctly clipped on.

– In frosty weather, make sure that the wiper blades are not stuck by ice (to avoid the risk of the motor overheating).

– Check the condition of the wiper blades.
Replace the wiper blades as soon as they begin to lose efficiency (approximately once a year).

Whilst changing the blade, take care not to drop the arm onto the window after it has been removed as this may break the window.

Choice of breakdown service

In the event of an energy fault
In the event of a fully discharged traction battery, any type of towing is permitted: **towing on a flatbed truck** or **towing on the road** using the tow eye (please see following pages).

All other cases

Only towing on a flatbed truck is permitted.

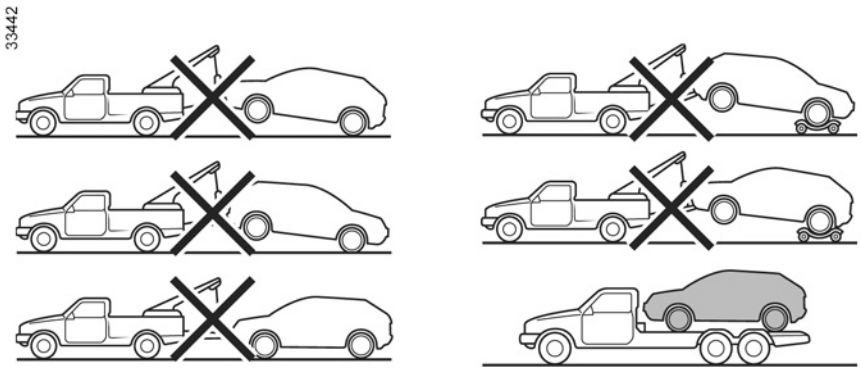

Towing on a flatbed truck

Breakdown recovery **must** be performed on a flat surface under all circumstances except where the vehicle is immobilised following a full discharge of the traction battery. In the event of a total energy loss, please see the following pages.

Before repairs, insert the key in the ignition to unlock the steering column. Turn it to position **M**.

The regulations in force for breakdown recovery must always be observed.

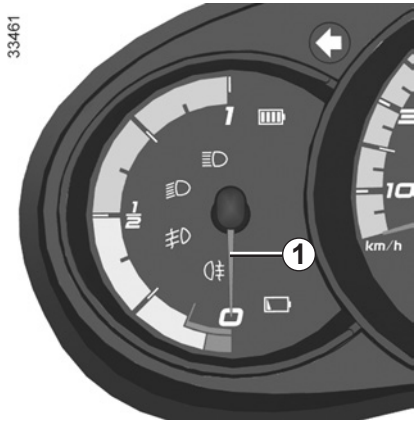

In the event of an energy fault: towing

In the event of a fully discharged traction battery:

– the warning light flashes;
– needle ***1*** is in the lower section of the reserve zone.

It is possible to recover on a flatbed truck or tow the vehicle using the tow eye, following the instructions below.

When the engine is stopped, steering and braking assistance are not operational.

Before towing, insert the key in the switch to unlock the steering column. Turn it to position **M**.

The column is unlocked, the accessory functions are supplied: the vehicle lights can be used (hazard warning lights, brake lights etc.). The towed vehicle's lights must be switched on at night.

The speed specified by current legislation for towing must always be observed.

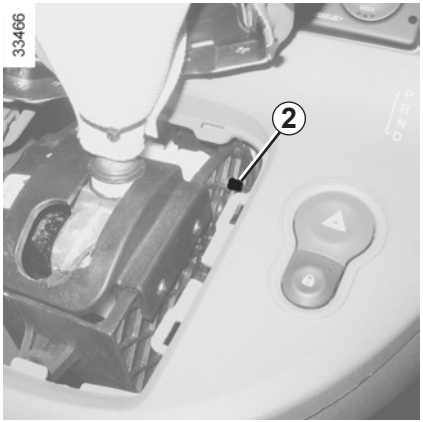

Bring lever to position **N**.

If the lever is stuck in **P**, even though you are depressing the brake pedal, the lever can be released manually.

To do this, unclip the cover at the base of the lever.

Press simultaneously on mark ***2*** and on the unlocking button on the lever.

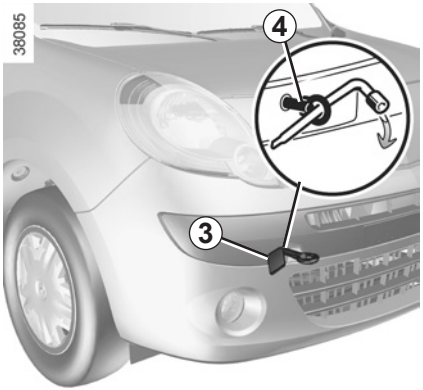

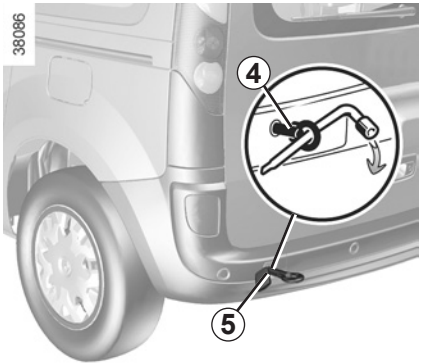

Access to towing points

Unclip cover ***3*** or ***5***.

Tighten towing hitch *4* fully: as much as possible by hand at first, then finish tightening it using the wheelbrace.

Towing hitch ***4*** and wheelbrace are located in the tool kit in the boot (please see Section 5 “Tool kit”).

Only use the front and rear towing points (never use the driveshafts). These towing points may only be used for towing: never use them for lifting the vehicle directly or indirectly.

Do not remove the key from the ignition when the vehicle is being towed.

Do not leave the tools unsecured inside the vehicle as they may come loose under braking.
After use, check that all the tools are correctly clipped into the tool kit, then, depending on the vehicle, position it correctly in its housing.
Risk of injury.

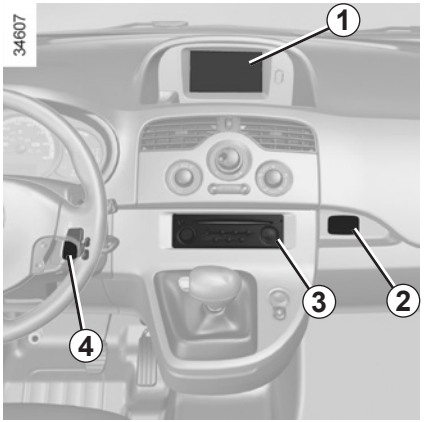

Radio equipment

Unclip the blanking cover. The connections for the aerial, + and – supply, and speaker wires are found behind the cover.

The equipment described below may or may not be fitted to the vehicle, and its location may vary, depending on the vehicle version:

1 offset display (time, exterior temperature, radio and navigation);

2 audio connection socket;

3 radio unit;

4 radio steering column controls.

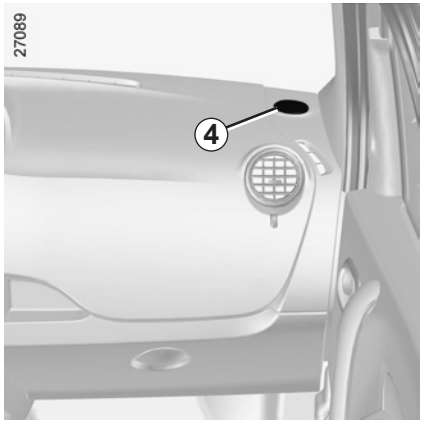

Tweeter speakers *4*

To operate this equipment: please refer to the instructions for the equipment which should be kept with the other vehicle documentation.

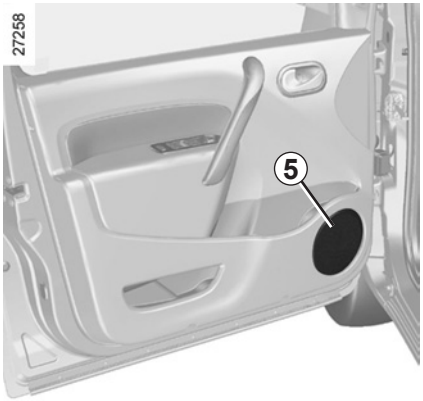

Bass speakers *5*

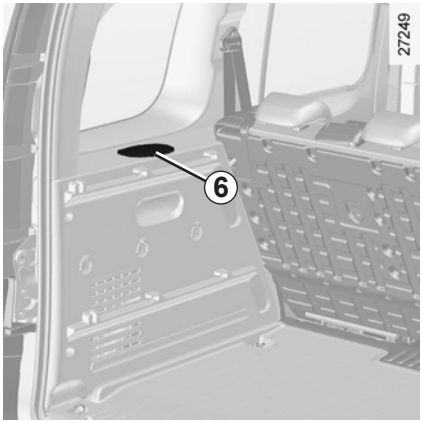

Rear speakers *6*

- In all cases, it is very important to follow the manufacturer's instructions carefully.
- The specifications of the brackets and wires vary depending on the equipment level of your vehicle and the type of radio.
  Consult an approved Dealer to find out the correct part number.
- No work may be carried out on the vehicle's electrical or radio circuits, except by an authorised dealer: an incorrectly connected system may result in damage being caused to the electrical equipment and/or the components connected to it.

Electrical and electronic accessories

Before installing this type of accessory, make sure it is compatible with your vehicle. You can get advice from an authorised dealer.

To install an accessory requiring intervention with the vehicle's 12V electrical circuit, please follow these instructions:

– disconnect the charging cord from the traction battery;
– switch off the ignition;
– disconnect the 12V battery.

Risk of serious injury.

Connect accessories with a maximum power of 120 watts only. **Fire hazard.**
No work may be carried out on the vehicle's electrical or radio circuits, except by authorised dealers: an incorrectly connected system may result in damage being caused to the electrical equipment and/or the components connected to it.
If the vehicle is fitted with any aftermarket electrical equipment, make sure that the installation is correctly protected by a fuse. Establish the rating and position of this fuse.

Use of transmission/receiving devices (telephones, CB equipment etc.).

Telephones and CB equipment with integrated aerials may cause interference to the electronic systems originally fitted to the vehicle: it is advisable only to use equipment with an external aerial. **Furthermore, we remind you of the need to conform to the legislation in force concerning the use of such equipment.**

Fitting after-market accessories

If you wish to install accessories on the vehicle: please contact an authorised dealer. Also, to ensure the correct operation of your vehicle, and to avoid any risk to your safety, we recommend that you use only accessories specifically designed for your vehicle, which are the only accessories for which the manufacturer will provide a warranty.
If you are using an anti-theft device, only attach it to the brake pedal.

Obstructions to the driver

On the driver's side, only use mats suitable for the vehicle, attached with the pre-fitted components, and check the fitting regularly. Do not lay one mat on top of another. **There is a risk of wedging the pedals**

27346

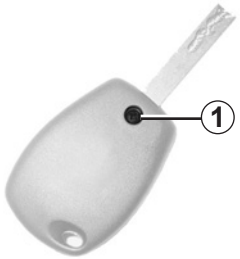

Replacing the remote control battery

Undo screw ***1*** to remove the remote control cover.

The batteries are available from approved Dealers, and their service life approximately two years.

Check that there is no dye on the battery: risk of an incorrect electrical contact.

27347

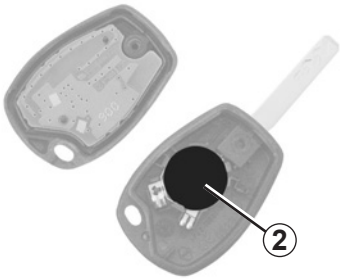

Replace battery ***2*** according to the direction marked on the cover.

Note: It is not advisable to touch the electronic circuit in the key cover when replacing the battery.

When refitting, ensure that the cover is correctly clipped on and the screw tightened.

26913

Do not throw away your used batteries; give them to an organisation responsible for collecting and recycling batteries.

OPERATING FAULTS (1/4)

The following advice will enable you to carry out quick, temporary repairs. For safety reasons, you should always contact an approved Dealer as soon as possible.

FAULTS	POSSIBLE CAUSES	WHAT TO DO
Impossible to charge the traction battery.	No electrical current in domestic sockets or poor connection of cable to domestic socket.	Check your installation (circuit breaker, programmer, etc.). Check the connections (socket, etc.). Please refer to the information on “Electric vehicle: charging” in Section 1.
	The exterior temperature is lower than -26°C.	Recharge your vehicle in a more suitable environment. If necessary, refer to the paragraph on “Towing, breakdown” in Section 5.
	The cord is defective.	Please see an authorised dealer to replace it.

OPERATING FAULTS (2/4)

FAULTS	POSSIBLE CAUSES	WHAT TO DO
The additional heating does not work.	Fill up the fuel tank.	Fill up with fuel – see information on the “Additional heating tank” in Section 1.
The programmable heating does not work.	One of the usage conditions is not complied with (the traction battery is not charged, etc.).	Refer to the information on “Heating/air conditioning: programmable heating” in Section 3.
	The vehicle clock is poorly adjusted or not adjusted.	Adjust the clock on the instrument panel see the information on “Clock and exterior temperature” in Section 1.

OPERATING FAULTS (3/4)

On the road	POSSIBLE CAUSES	WHAT TO DO
Steering becomes heavy.	Assistance overheating.	Consult an approved Dealer.
Vibrations.	Tyres not inflated to the correct pressure, incorrectly balanced or damaged.	Check tyre pressures. If this is not the problem, have them checked by an authorised dealer.
	Coolant leaks.	Check the coolant reservoir: it should contain fluid. If there is no coolant, consult an authorised dealer as soon as possible.

OPERATING FAULTS (4/4)

Electrical equipment	POSSIBLE CAUSES	WHAT TO DO
The wipers do not work.	Wiper blades stuck.	Free the blades before using the wipers.
	Faulty electrical circuit.	Consult an approved Dealer.
The wiper does not stop.	Faulty electrical controls.	Consult an approved Dealer.
Direction indicators flashing more quickly.	Blown bulb.	Replace the bulb.
The direction indicators do not work.	Faulty electrical circuit.	Consult an approved Dealer.
The headlights do not switch on or off.	Faulty electrical circuit or control.	Consult an approved Dealer.
Traces of condensation in the lights.	This is not a fault. Traces of condensation are a natural phenomenon caused by variations in temperature. These traces soon disappear when the lights are switched on.	

Section 6: Technical specifications

Vehicle identification plates 6.2
Engine identification plate 6.3
Engine specification. 6.3
Weights 6.4
Dimensions 6.5
Replacement parts and repairs 6.7
Service sheets 6.8
Anti-corrosion check 6.14

VEHICLE IDENTIFICATION PLATES

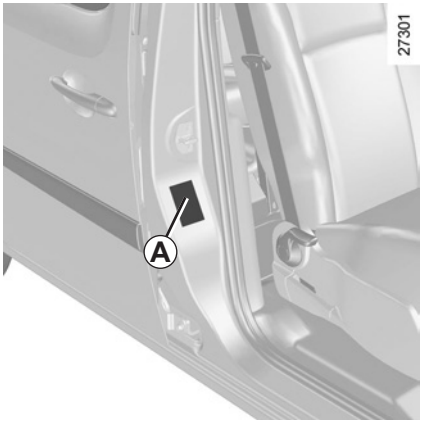

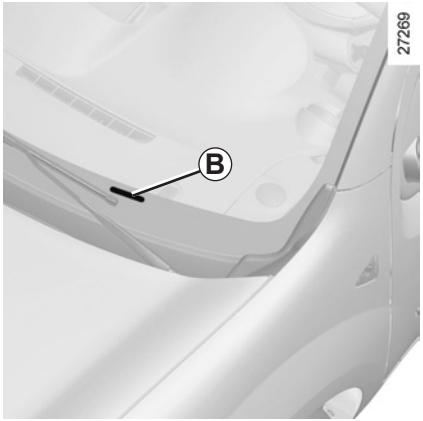

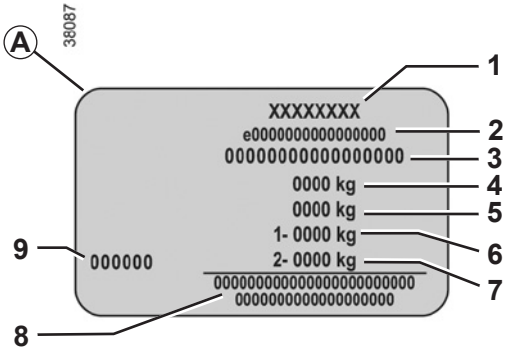

The information shown on the vehicle identification plate should be quoted on all correspondence or orders.

Vehicle identification plate *A*

1 Manufacturer name.

2 EC design number or approval number.

3 Identification number.
Depending on the vehicle, this information is also given on marking *B*.

4 MAM (Maximum Authorised Mass) for front axle.

5 GTW (Gross train weight: vehicle fully loaded, with trailer).

6 MPAW (Maximim Permissible Weight) for front axle.

7 MPAW on rear axle.

8 Reserved for related or additional entries.

9 Paint reference (colour code).

ENGINE IDENTIFICATION PLATE/ENGINE SPECIFICATIONS

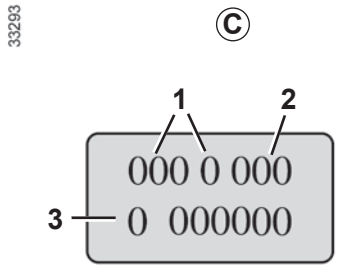

Engine identification plate

Quote the details given on engine plate *C* on all communication or orders.

(Location varies depending on engine)

1 Engine type.
2 Engine suffix.
3 Engine number.

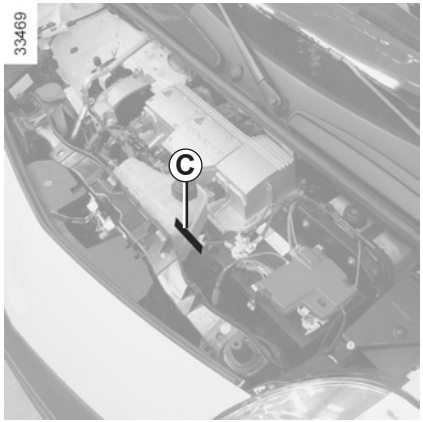

Engine specification

Engine type ***1***: 5AM

WEIGHTS (in kg)

The weights indicated are for a basic vehicle without options: they vary depending on the your vehicle's equipment. Contact an approved Dealer.

	Medium	long
Maximum permissible all-up weight (MMAC) **Total train weight (MTR)**	Weights are indicated on the vehicle identification plate (refer to the information on "Vehicle identification plates" in Section 6)	
Braked Trailer Weight *	found by calculating: **MTR - MMAC**	
Unbraked trailer weight *	374	322
Permissible nose weight *	75	
Maximum permissible load on roof	100 (including the carrying device)	

*** Towing weight (Towing a caravan, boat, etc.)**
Towing is prohibited when the GTW - MAM calculation is equal to zero, or when the GTW is equal to zero (or is not listed) on the identification plate.

– It is important to comply with the towing weights, governed by local legislation in each country and, in particular, laid down in the Road Traffic Regulations. Contact an approved Dealer about any towing equipment.

– When towing, under no circumstances may **the total train weight (vehicle + trailer) be exceeded**. However the following is permitted:

  – the Maximum permissible weight at the rear may be exceeded by no more than 15%,
  – the maximum permissible all-up weight may be exceeded by no more than 10% or 100 kg (whichever occurs first).

  In either case, the maximum speed of the towing assembly must not exceed 48 mph (80 km/h) and the tyre pressure must be increased by 0.2 bar (3 PSI).

DIMENSIONS (in metres) (1/2)

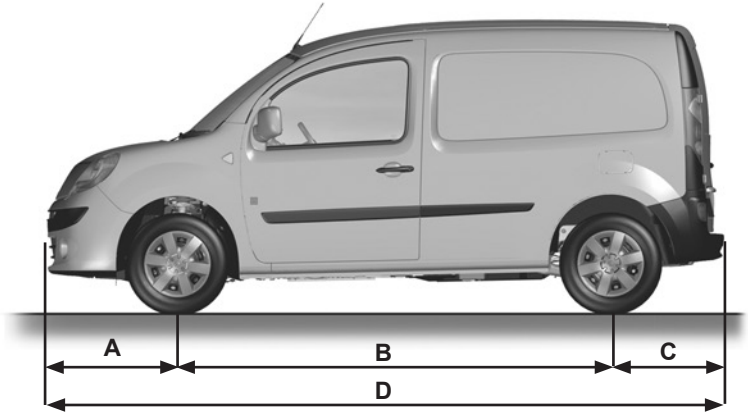

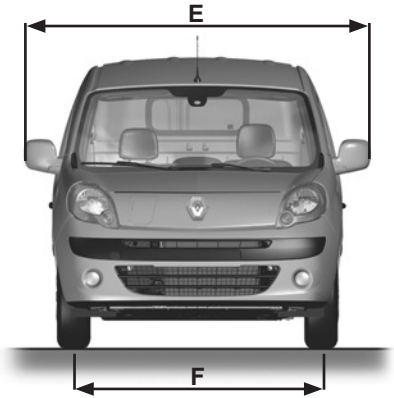

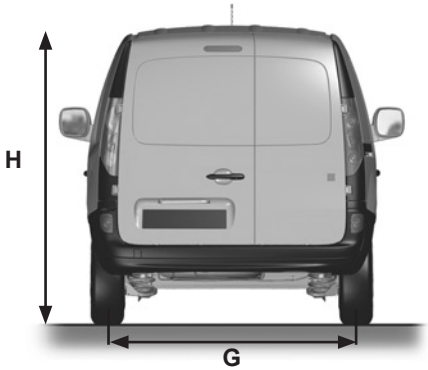

33464

DIMENSIONS (in metres) (2/2)

	2 seater		5 seater
	Medium	Long	
A	0.8		
B	2.7	3.0	3,1
C	0.7		
D	4.2	4.6	
E	2.1		
F	1.5		
G	1.5		
H (unladen)	1.8		

Turning circles between kerbs	10.7	11.9
Turning circles between walls	11.2	12.4

REPLACEMENT PARTS AND REPAIRS

Original parts are based on strict specifications and are subject to highly-specialised tests. Therefore, they are of at least the same level of quality as the parts fitted originally.

If you always fit genuine replacement parts to your vehicle, you will ensure that it performs well. Furthermore, repairs carried out within the manufacturer's Network using original parts are guaranteed according to the conditions set out on the reverse of the repair order.

SERVICE SHEETS (1/6)

VIN: .....

Date: Miles (Km):	Invoice number:	Comments/miscellaneous
Type of operation: Service □ ..... □ **Anti-corrosion check:** OK □ Not OK* □ *See specific page	**Stamp**	

Date: Miles (Km):	Invoice number:	Comments/miscellaneous
Type of operation: Service □ ..... □ **Anti-corrosion check:** OK □ Not OK* □ *See specific page	**Stamp**	

Date: Miles (Km):	Invoice number:	Comments/miscellaneous
Type of operation: Service □ ..... □ **Anti-corrosion check:** OK □ Not OK* □ *See specific page	**Stamp**	

SERVICE SHEETS (2/6)

VIN: .....

Date: Miles (Km):	Invoice number:	Comments/miscellaneous
Type of operation: Service □ ..... □ **Anti-corrosion check:** OK □ Not OK* □ *See specific page	**Stamp**	

Date: Miles (Km):	Invoice number:	Comments/miscellaneous
Type of operation: Service □ ..... □ **Anti-corrosion check:** OK □ Not OK* □ *See specific page	**Stamp**	

Date: Miles (Km):	Invoice number:	Comments/miscellaneous
Type of operation: Service □ ..... □ **Anti-corrosion check:** OK □ Not OK* □ *See specific page	**Stamp**	

SERVICE SHEETS (3/6)

VIN: .....

Date: Miles (Km):	Invoice number:	Comments/miscellaneous
Type of operation: Service □ ..... □ **Anti-corrosion check:** OK □ Not OK* □ *See specific page	**Stamp**	

Date: Miles (Km):	Invoice number:	Comments/miscellaneous
Type of operation: Service □ ..... □ **Anti-corrosion check:** OK □ Not OK* □ *See specific page	**Stamp**	

Date: Miles (Km):	Invoice number:	Comments/miscellaneous
Type of operation: Service □ ..... □ **Anti-corrosion check:** OK □ Not OK* □ *See specific page	**Stamp**	

SERVICE SHEETS (4/6)

VIN: .....

Date: Miles (Km):	Invoice number:	Comments/miscellaneous
Type of operation: Service □ ..... □ **Anti-corrosion check:** OK □ Not OK* □ *See specific page	**Stamp**	

Date: Miles (Km):	Invoice number:	Comments/miscellaneous
Type of operation: Service □ ..... □ **Anti-corrosion check:** OK □ Not OK* □ *See specific page	**Stamp**	

Date: Miles (Km):	Invoice number:	Comments/miscellaneous
Type of operation: Service □ ..... □ **Anti-corrosion check:** OK □ Not OK* □ *See specific page	**Stamp**	

SERVICE SHEETS (5/6)

VIN: .....

Date: Miles (Km):	Invoice number:	Comments/miscellaneous
Type of operation: Service □ ..... □ **Anti-corrosion check:** OK □ Not OK* □ *See specific page	**Stamp**	

Date: Miles (Km):	Invoice number:	Comments/miscellaneous
Type of operation: Service □ ..... □ **Anti-corrosion check:** OK □ Not OK* □ *See specific page	**Stamp**	

Date: Miles (Km):	Invoice number:	Comments/miscellaneous
Type of operation: Service □ ..... □ **Anti-corrosion check:** OK □ Not OK* □ *See specific page	**Stamp**	

SERVICE SHEETS (6/6)

VIN: .....

Date: Miles (Km):	Invoice number:	Comments/miscellaneous
Type of operation: Service □ ..... □ **Anti-corrosion check:** OK □ Not OK* □ *See specific page	**Stamp**	

Date: Miles (Km):	Invoice number:	Comments/miscellaneous
Type of operation: Service □ ..... □ **Anti-corrosion check:** OK □ Not OK* □ *See specific page	**Stamp**	

Date: Miles (Km):	Invoice number:	Comments/miscellaneous
Type of operation: Service □ ..... □ **Anti-corrosion check:** OK □ Not OK* □ *See specific page	**Stamp**	

ANTICORROSION CHECK (1/5)

If the continuation of the warranty is subject to repair, it is indicated below.

VIN: .....

Corrosion repair operation to be carried out: Date of repair:	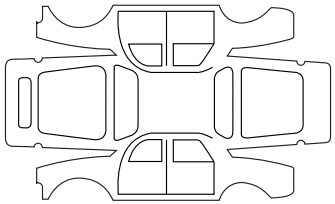	**Stamp**
Repair to be carried out: Date of repair:	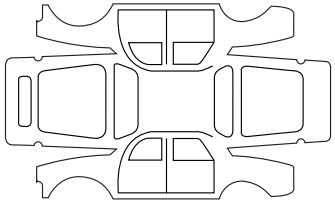	**Stamp**
Repair to be carried out: Date of repair:	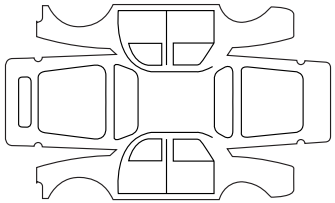	**Stamp**

ANTICORROSION CHECK (2/5)

If the continuation of the warranty is subject to repair, it is indicated below.

VIN: .....

Corrosion repair operation to be carried out: Date of repair:		**Stamp**
Repair to be carried out: Date of repair:		**Stamp**
Repair to be carried out: Date of repair:		**Stamp**

ANTICORROSION CHECK (3/5)

If the continuation of the warranty is subject to repair, it is indicated below.

VIN: .....

Corrosion repair operation to be carried out: Date of repair:		**Stamp**
Repair to be carried out: Date of repair:		**Stamp**
Repair to be carried out: Date of repair:		**Stamp**

ANTICORROSION CHECK (4/5)

If the continuation of the warranty is subject to repair, it is indicated below.

VIN: .....

Corrosion repair operation to be carried out: Date of repair:		**Stamp**
Repair to be carried out: Date of repair:		**Stamp**
Repair to be carried out: Date of repair:		**Stamp**

ANTICORROSION CHECK (5/5)

If the continuation of the warranty is subject to repair, it is indicated below.

VIN: .....

Corrosion repair operation to be carried out: Date of repair:		**Stamp**
Repair to be carried out: Date of repair:		**Stamp**
Repair to be carried out: Date of repair:		**Stamp**

ALPHABETICAL INDEX (1/5)

A

ABS ..... 2.10 – 2.11
accessories 5.35
accessories socket 3.17
additional heating fuel 1.86
additional heating tank 1.86
additional methods of restraint 1.41
additional heating ..... 3.9 – 3.10
  additional heating fuel tank 1.86
additional tank capacity 1.86
additional tank filling 1.86
air bag ..... 1.37 → 1.41
  activating the front passenger air bags ..... 1.52 → 1.54
  deactivating the front passenger air bags ..... 1.52 → 1.54
air conditioning ..... 3.4 → 3.6, 3.11
air vents ..... 3.2 – 3.3
anti-corrosion check ..... 6.14 → 6.18
anti-corrosion protection 4.9
anti-lock braking system: ABS ..... 2.10 – 2.11
ashtrays 3.17
audible and visual signals 1.77

B

12 volt battery
  breakdown recovery ..... 5.24 – 5.25
  maintenance ..... 4.6 – 4.7
12 volt battery ..... 1.2 → 1.6, 4.6 – 4.7, 5.24 – 5.25
battery
  troubleshooting ..... 5.24 – 5.25
battery (remote control) 5.36
bonnet ..... 4.2 – 4.3
brake fluid 4.5
brake lights
  changing bulbs ..... 5.18 – 5.19
bulbs
  changing ..... 5.15 → 5.23

C

changing a bulb ..... 5.15 → 5.17, 5.21 → 5.23
changing a wheel 5.10
changing gear ..... 2.3 – 2.4
charge meter 1.64, 2.5, 2.8
charging cord ..... 1.8 → 1.13, 1.16
charging flap ..... 1.7 → 1.13
charging socket ..... 1.2 → 1.6, 1.8 → 1.13
child minder mirror 3.14
child restraint/seat ..... 1.42 – 1.43, 1.45 → 1.54
child safety ..... 1.14, 1.16, 1.18, 1.42 – 1.43, 1.45 → 1.54, 3.15
child seats ..... 1.42 – 1.43, 1.45 → 1.51
children ..... 1.42 – 1.43
cigar lighter 3.17
cleaning:
  inside the vehicle ..... 4.11 – 4.12
clock 1.75
closing the doors ..... 1.17 → 1.21
connected services 1.3
control instruments ..... 1.63 → 1.71
controls ..... 1.56 → 1.59
coolant 4.4
courtesy light ..... 3.12 – 3.13
courtesy mirrors 3.14
cruise control ..... 2.15 → 2.18

D

dashboard ..... 1.56 → 1.59
deadlocking the doors 1.16
de-icing 3.5
dimensions ..... 6.5 – 6.6
display ..... 1.60 → 1.65
doors ..... 1.17 → 1.24
driver’s position ..... 1.56 → 1.62
driving ..... 2.3 → 2.6, 2.10 → 2.20

driving position
settings ....1.33 → 1.36

E
»ECO» mode function 2.5, 2.9
»400 volt» electrical circuit ....1.2 → 1.7
electric vehicle
vehicle range 2.5
batteries 1.4
noise 1.6
charge ....1.8 → 1.13
driving 1.6, 2.3, 2.5
»ECO» mode 2.9
important recommendations 1.7, 1.9
electric windows ....3.15 – 3.16
electrical installation 1.9
emergency brake assist ....2.10 – 2.11
emergency braking ....2.10 – 2.11
emergency spare wheel 5.2
energy
recovery 1.64, 2.8
»ECO» mode 2.9
saving ....2.5 – 2.6
charge meter (function) 2.8
consumption ....1.63 – 1.64, 2.8
charge ....1.8 → 1.13
range 2.8
energy saving ....2.5 – 2.6
energy consumption ....2.5 – 2.6, 2.8
energy recovery 2.8
engine specifications 6.3
environment 2.7
external temperature 1.75

F
faults
operating faults ....5.37 → 5.40
fitting a radio ....5.33 – 5.34
fittings ....3.18 → 3.20
fog lights 1.81, 5.17
front lights
changing bulbs ....5.15 – 5.16
front passenger air bag deactivation ....1.52 → 1.54
front seat adjustment ....1.28 – 1.29
front seats
adjustment ....1.28 – 1.29
fuel
capacity 1.86
filling 1.86
grade 1.86
fuel filler cap 1.86
fuses ....5.26 – 5.27

G
gear lever ....2.3 – 2.4
glove box 3.18

H
handbrake 2.4
hazard warning lights signal 1.77
headlight beam adjustment 1.82
headrest ....1.25 → 1.27, 3.23
heated seats ....1.28 – 1.29
heating and air conditioning system 3.11
heating, air conditioning: programming ....2.6, 3.7 – 3.8
heating system ....3.4 → 3.11
horn 1.77
horn:
flash 1.77
sounding the horn 1.77

hubcap tool 5.8

I
indicators 1.77, 5.16, 5.21
indicators:
direction indicators 5.16, 5.21
instrument panel ..... 1.60 → 1.65
instrument panel ..... 1.60 → 1.74
instrument panel messages ..... 1.66 → 1.74
interior lighting:
changing bulbs ..... 5.22 – 5.23
interior trim
maintenance ..... 4.11 – 4.12
Isofix ..... 1.45 → 1.51

J
jack 5.8, 5.10

L
levels:
brake fluid 4.5
coolant 4.4
windscreen washer reservoir 4.5
lifting the vehicle
changing a wheel ..... 5.10 – 5.11
lighting:
interior ..... 3.12 – 3.13
lights
adjustment 1.82
changing bulbs ..... 5.15 – 5.16
fog lights 5.17
front ..... 5.15 – 5.16
lights:
brake lights 5.18
dipped beam headlights 1.60, 1.79, 5.15
direction indicators 1.60, 1.77, 5.18
fog lights 1.60, 1.81, 5.17
hazard warning 1.77
main beam headlights ..... 1.60, 1.79 – 1.80
number plate lights 5.20
reversing lights 5.18
side lights 1.79
lights-on warning buzzer 1.17, 1.80
locking the doors ..... 1.22 – 1.23
luggage retaining net 3.26

M
maintenance:
bodywork ..... 4.9 – 4.10
interior trim ..... 4.11 – 4.12
mechanical ..... 4.2 – 4.3, 6.8 → 6.13
map reading lights ..... 3.12 – 3.13
methods of restraint in addition to the front seat belts ..... 1.37 → 1.39
methods of restraint in addition to the seat belts ... 1.37 → 1.41
multimedia equipment ..... 5.33 – 5.34

O
opening the doors ..... 1.17 → 1.21
operating faults ..... 1.60 → 1.62, 5.37 → 5.40

P
paintwork
maintenance ..... 4.9 – 4.10
reference 6.2
parking distance control ..... 2.19 – 2.20
partition 1.32
pedestrian warning system 1.78
power-assisted steering 1.55
practical advice ..... 2.5 – 2.6, 5.34
presentation of the electric vehicle
batteries ..... 1.2 → 1.6

pretensioners 1.37
puncture 5.8, 5.10

R
radio ..... 5.33 – 5.34
radio frequency remote control/key
use 1.14, 1.16
rear bench seat ..... 3.21 – 3.22
rear lights
changing bulbs ..... 5.18 → 5.20
rear screen
demisting 3.2
rear seats
functions ..... 3.21 – 3.22
rear view mirrors 1.76
remote control door locking
batteries 5.36
remote control electric door locking 1.14, 1.16
RENAULT ANTI-INTRUDER DEVICE (RAID) 1.24
replacement parts 6.7
reverse gear
selecting ..... 2.3 – 2.4
reversing sensor ..... 2.19 – 2.20

S
seat belts ..... 1.33 → 1.41
see-me-home lighting 1.80
service sheets ..... 6.8 → 6.13
side indicator lights
changing bulbs 5.21
side protection devices 1.40
side windows 3.16
signals and lights ..... 1.79 → 1.81
speakers 5.34
speed control ..... 2.3 – 2.4
speed limiter ..... 2.12 → 2.14
steering wheel
adjustment 1.55
storage compartment ..... 3.18 → 3.20
storage compartments ..... 3.18 → 3.20
sun visor 3.14, 3.20

T
tailgate ..... 1.19 → 1.21, 3.24
tanks and reservoirs
brake fluid 4.5
coolant 4.4
tanks and reservoirs:
windscreen washer 4.5
technical specifications ..... 6.2, 6.4 → 6.7
temperature regulation 3.11
tool kit 5.8
towing
in the event of energy failure ..... 5.30 → 5.32
breakdown ..... 5.30 → 5.32
towing equipment 3.25
towing equipment
fitting 3.25
towing hitch ..... 5.8, 5.31 – 5.32
towing rings ..... 1.45 – 1.46
traction battery
charge 1.8
traction battery ..... 1.2 → 1.7, 2.8
traction battery charge ..... 1.8 → 1.13, 1.16
transporting children ..... 1.42 – 1.43, 1.45 → 1.54
transporting objects
in the luggage compartment 3.24
trims 5.9
trip computer and warning system ... 1.60 → 1.62, 1.68 → 1.74
tyre inflation kit ..... 5.3 → 5.7
tyre pressure 4.8
tyre pressures ..... 4.8, 5.12 → 5.14

ALPHABETICAL INDEX (5/5)

tyres....4.8, 5.12 → 5.14

U

unlocking the doors .... 1.22 – 1.23

V

vehicle identification 6.2
vehicle identification plates.... 6.2
vehicle range .... 2.5 – 2.6
ventilation ....3.2 → 3.8, 3.11

W

warning lights....1.60 → 1.62, 1.66 – 1.67, 1.73
washing .... 4.9 – 4.10
weights 6.4
wheelbrace 5.8
wheels (safety) 5.12
windscreen de-icing/demisting 3.5
windscreen washer....1.83 → 1.85, 4.5
windscreen washer/wiper
replacing blades.... 5.28 – 5.29
wiper blades .... 5.28 – 5.29
wipers ....1.83 → 1.85

KANGOO Z.E.

(www.e-guide.renault.com)

RENAULT S.A.S. SOCIÉTÉ PAR ACTIONS SIMPLIFIÉE AU CAPITAL DE 533 941 113 € / 13-15, QUAI LE GALLO
92100 BOULOGNE-BILLANCOURT R.C.S. NANTERRE 780 129 987 — SIRET 780 129 987 03591 / TÉL. : 0810 40 50 60
NU 911-4 – 99 91 034 24R – 09/2012 – Edition anglaise