Verso

Rear bumper protection plate

Installation instructions

TOYOTA

ALWAYS A
BETTER WAY

Model year:	2012/11
Vehicle code:	**R2**-GW***W
Part number:	PZ467-E8520-ZA

Manual reference number: AIM 002 778 - 1

Revision Record

Rev. No.	Date	Page	Picture	Update	New	Deleted steps
1	08.12.15	3		X		
1	08.12.15	4-7		X		
1	08.12.15	5	7	X		
1	08.12.15	8			X	

PZ 467-E8520-ZA

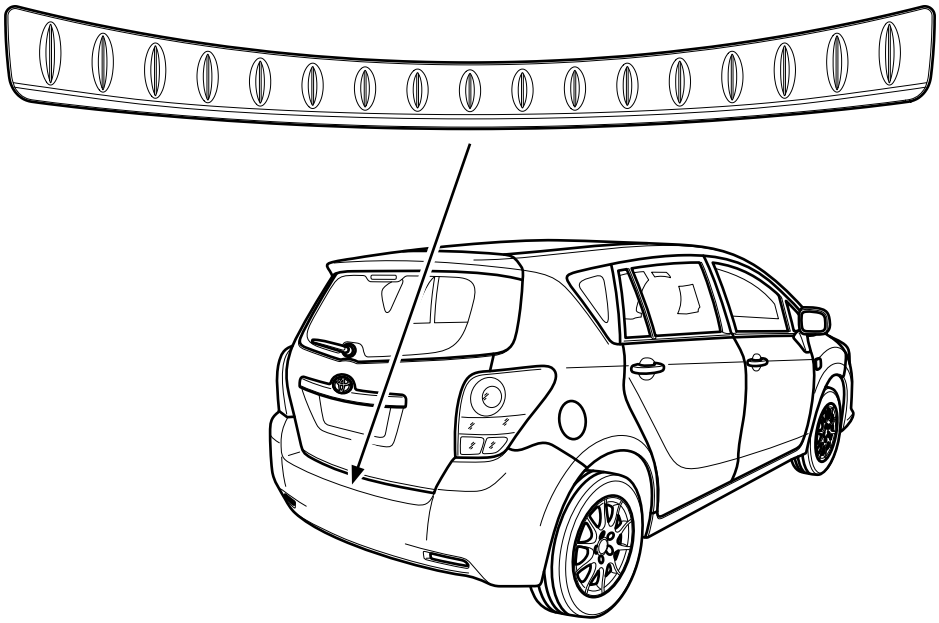

A

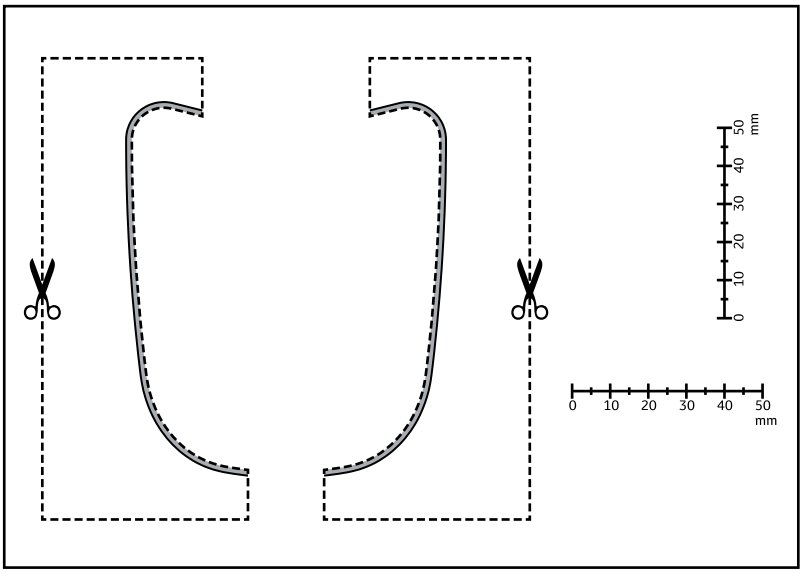

B

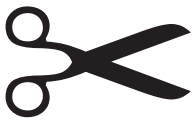			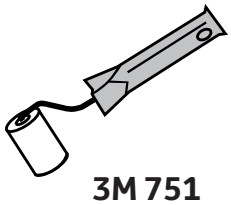 3M 751	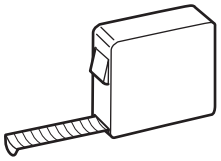
3M 2010	CLEANER DEGREASER	PZ415-00000-00 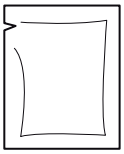 3M adhesion promoter 4298 UV		

TOYOTA

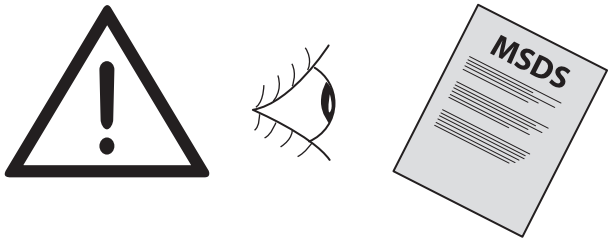

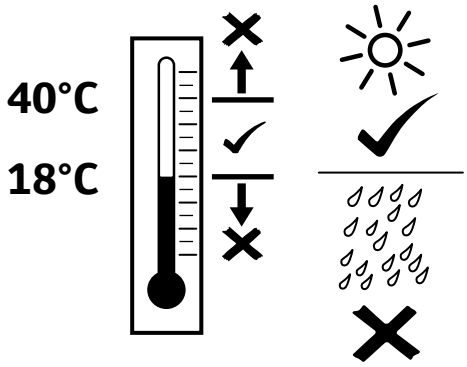

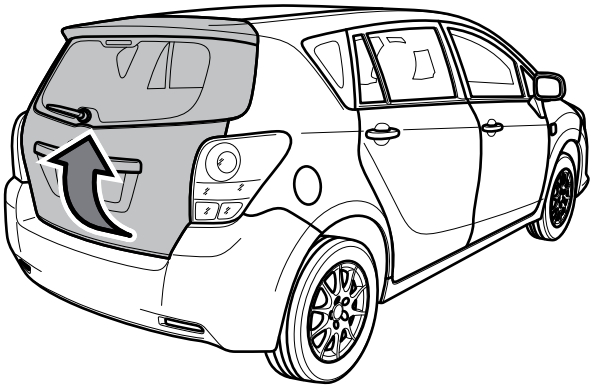

1

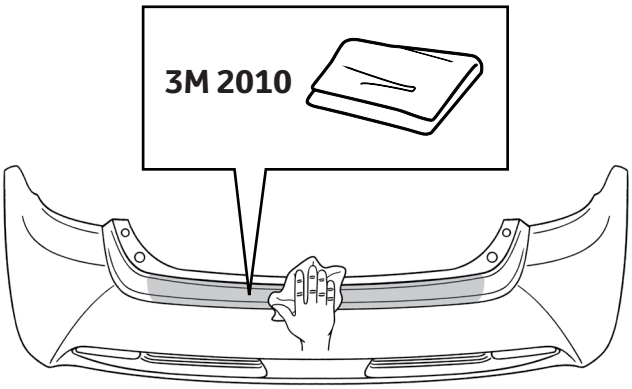

2

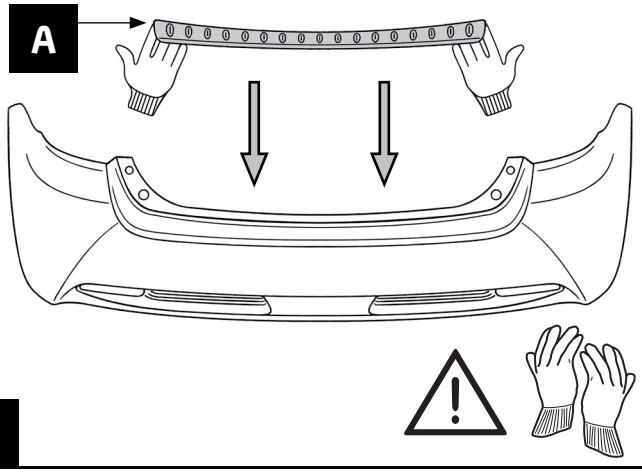

3

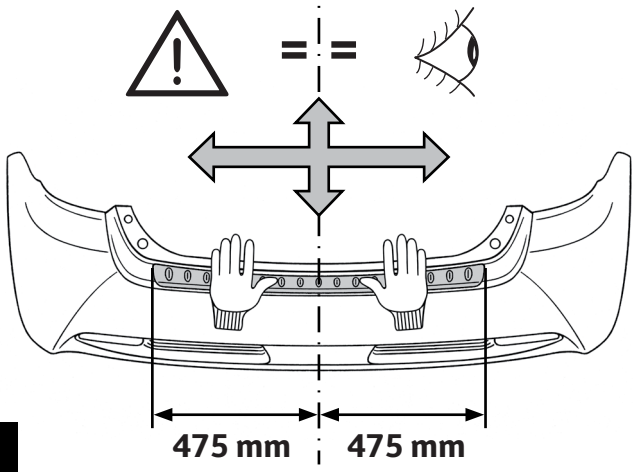

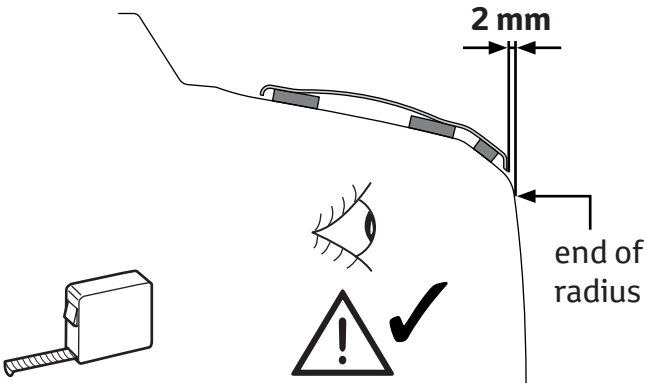

4

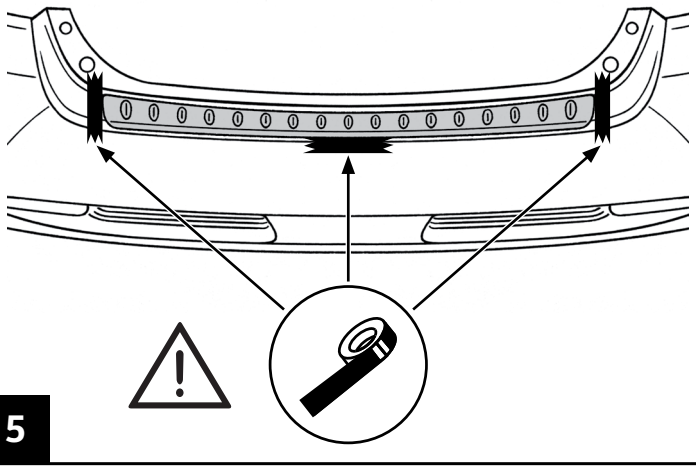

5

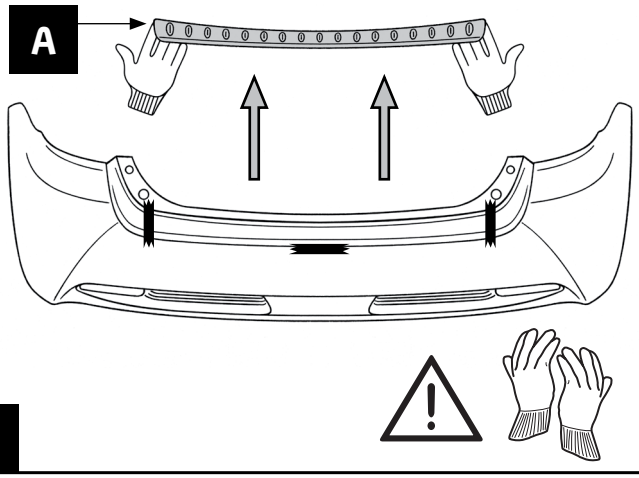
A

6

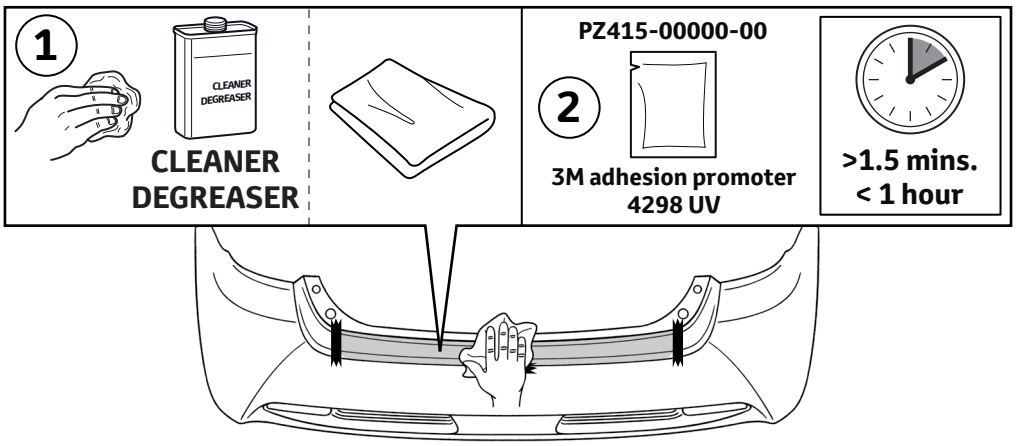
1
CLEANER DEGREASER
CLEANER
DEGREASER
PZ415-00000-00
2
3M adhesion promoter
4298 UV
>1.5 mins.
< 1 hour

7

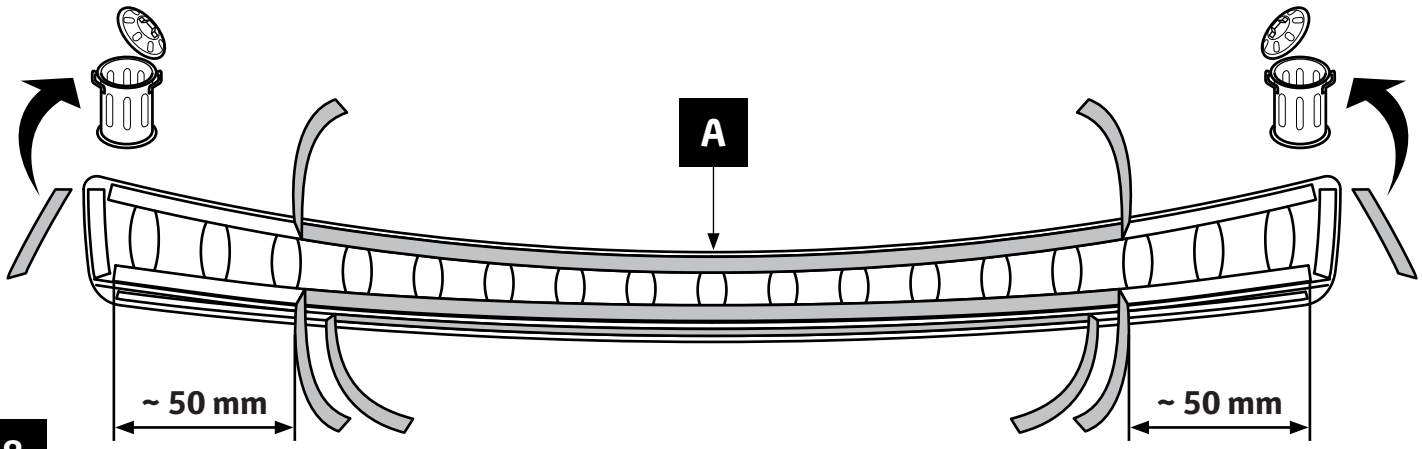
A
~ 50 mm
~ 50 mm

8

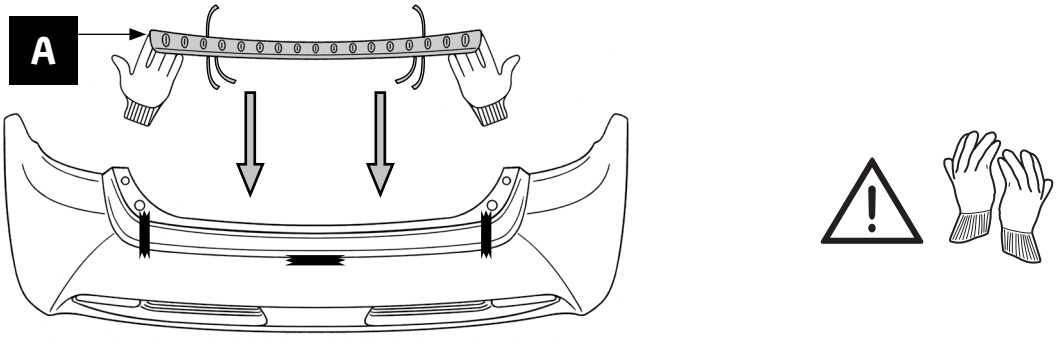
A

9

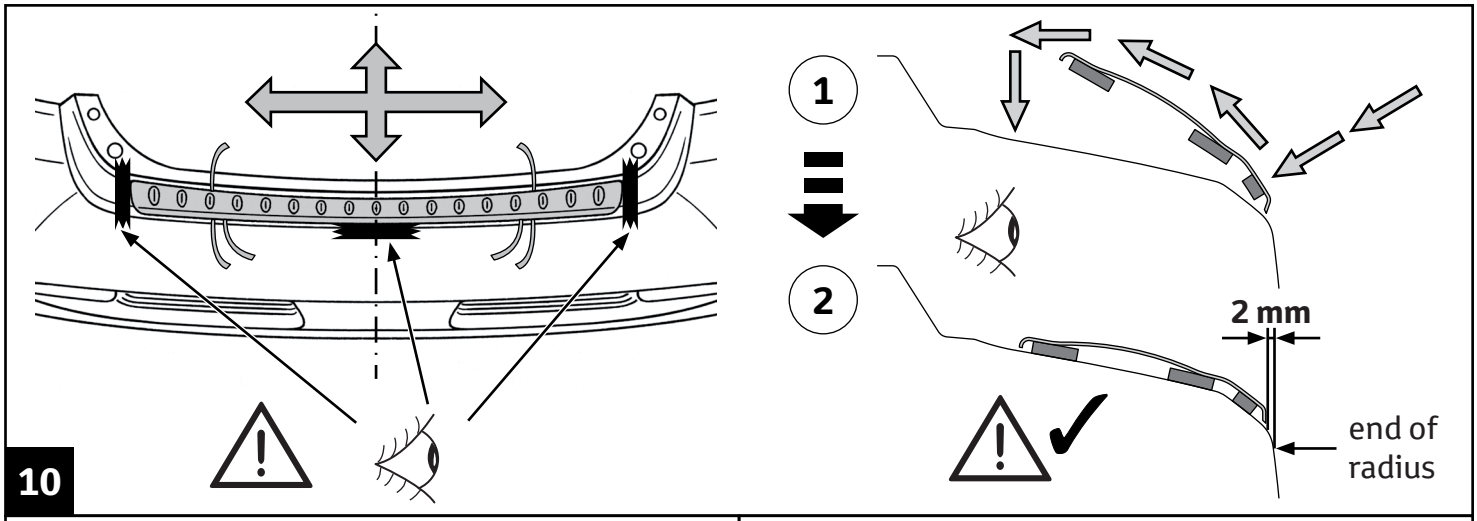
10
1
2
2 mm
end of radius

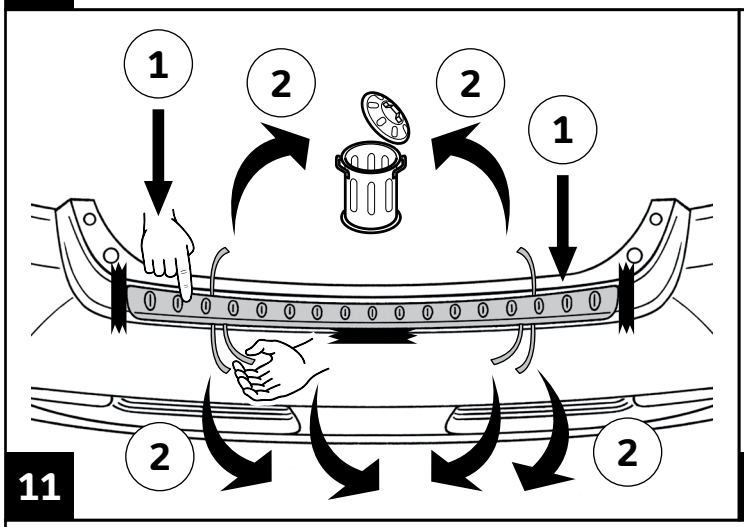
11
1
2
2
1
2
2

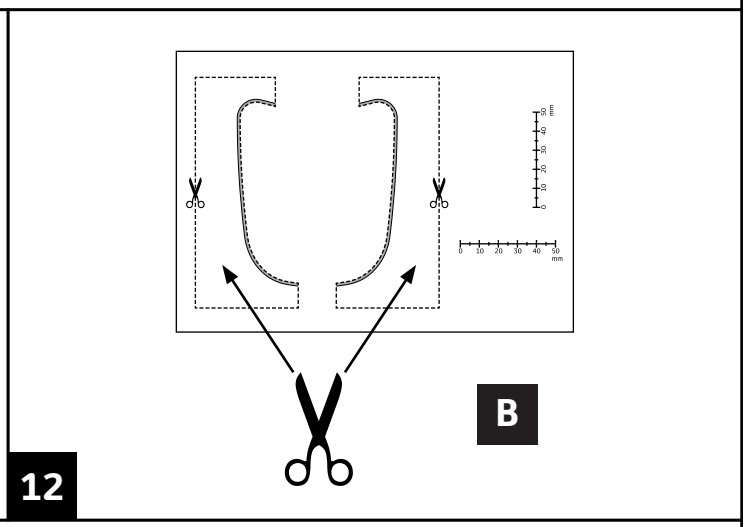
12
B

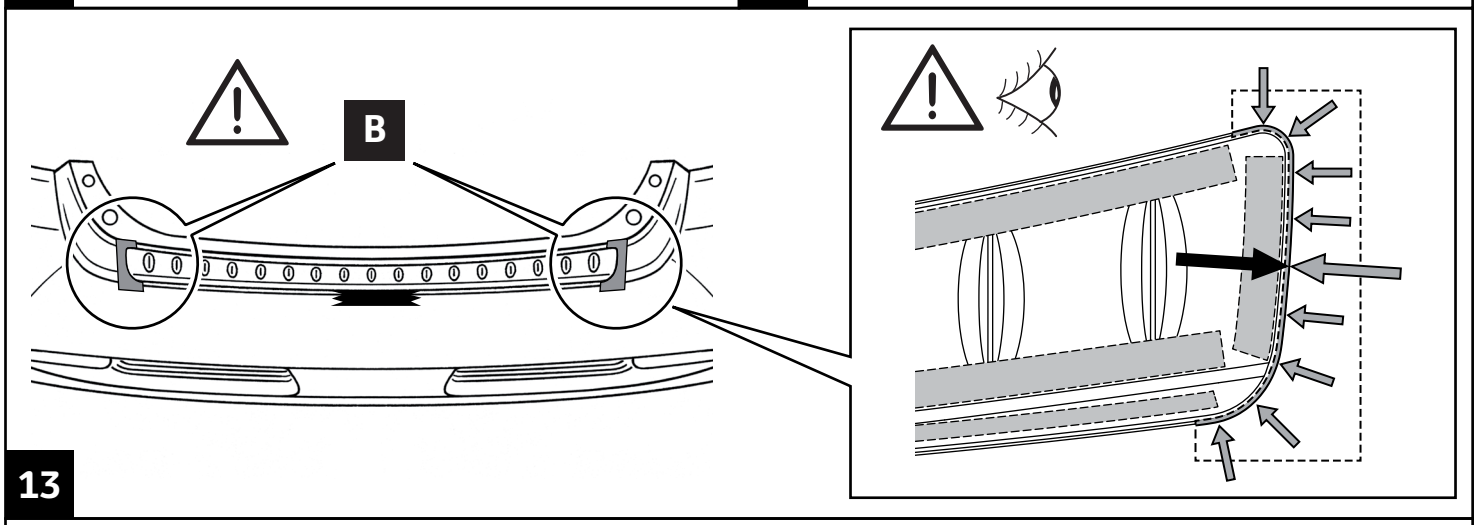
13
B

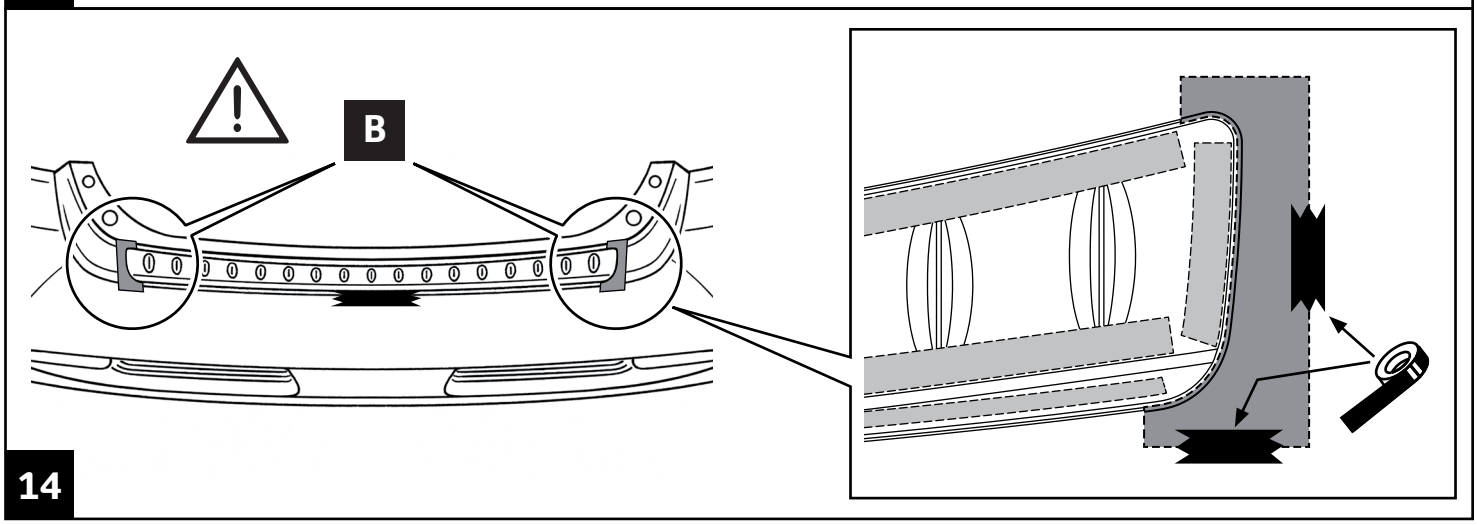
14
B

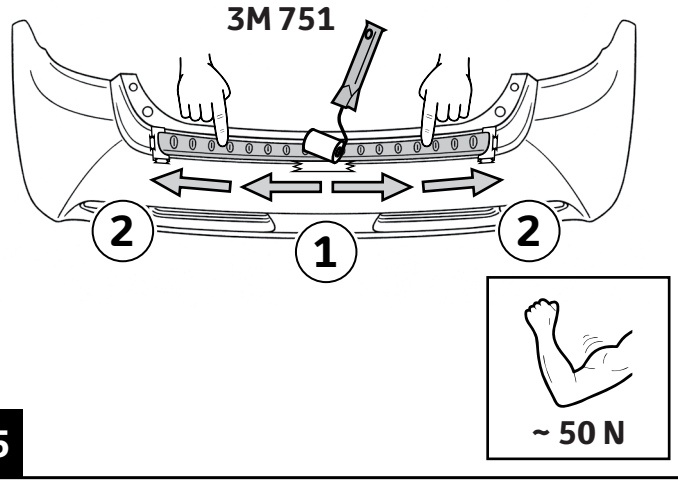

15

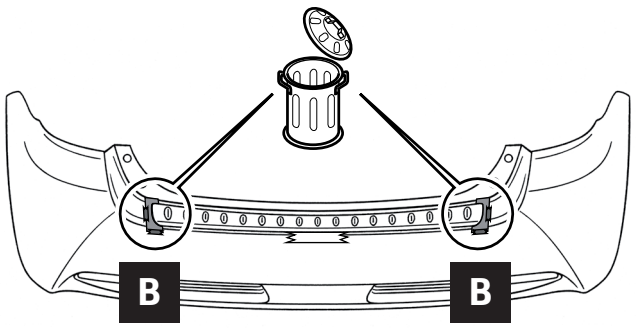

16

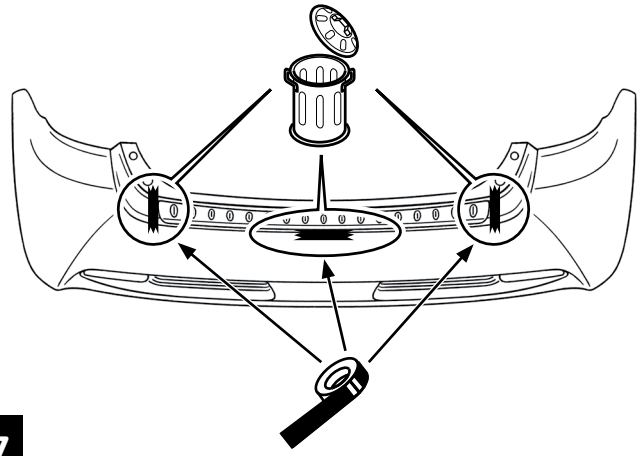

17

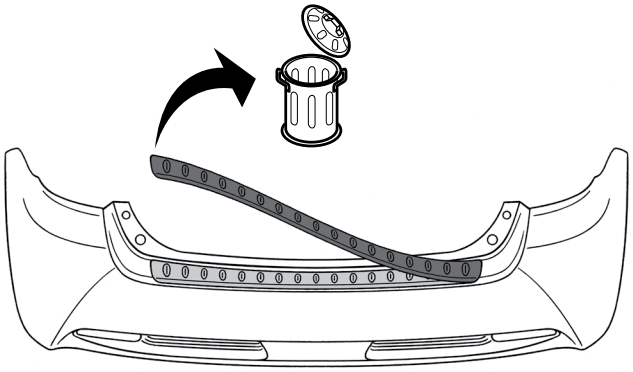

18

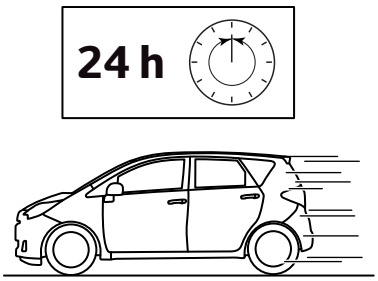

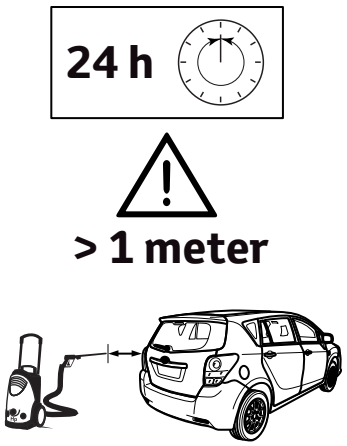

CHECK SHEET

TOYOTA

ALWAYS A BETTER WAY

Model / Year Verso 2012/11 — Rear bumper protection plate

VIN n° ☐☐☐☐☐☐☐☐☐☐☐☐☐☐☐☐☐

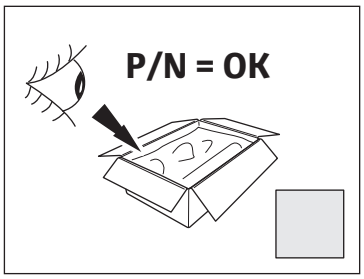

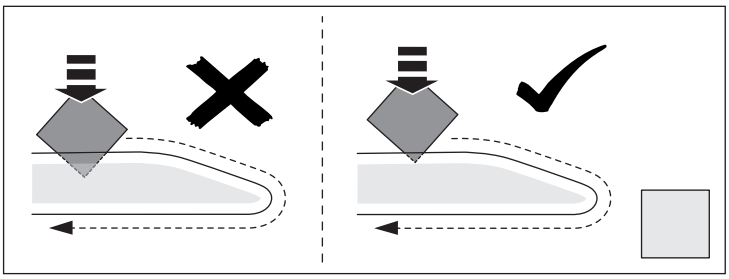

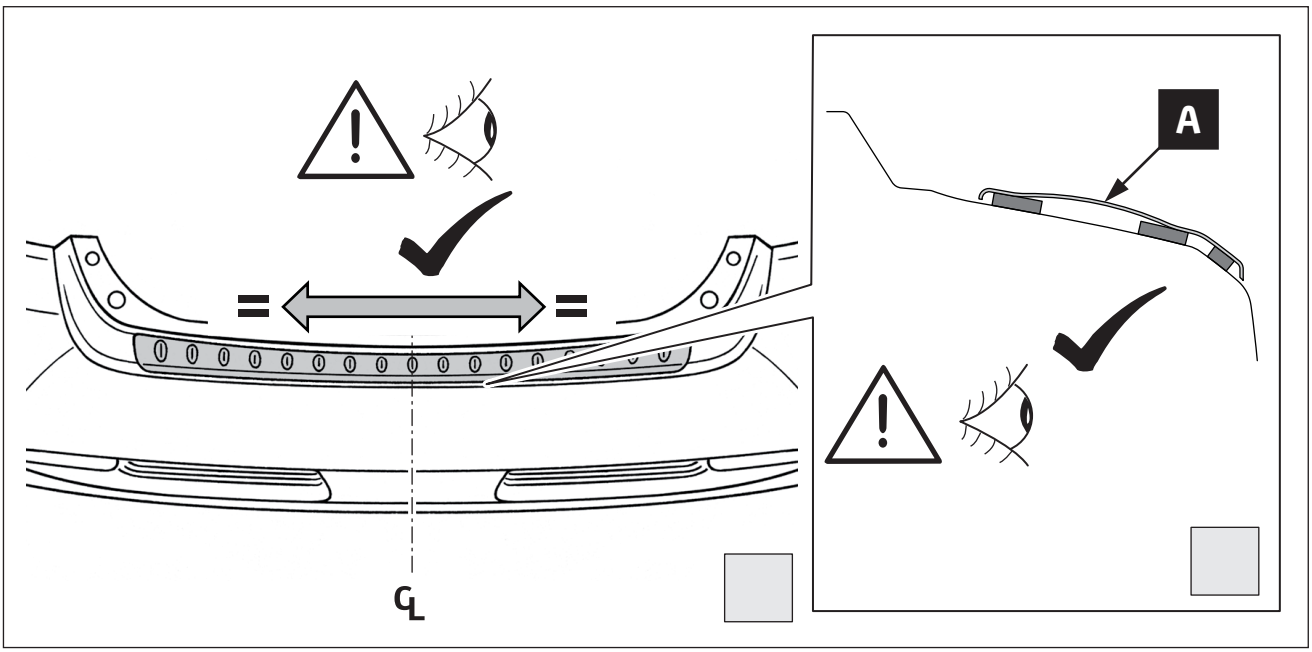

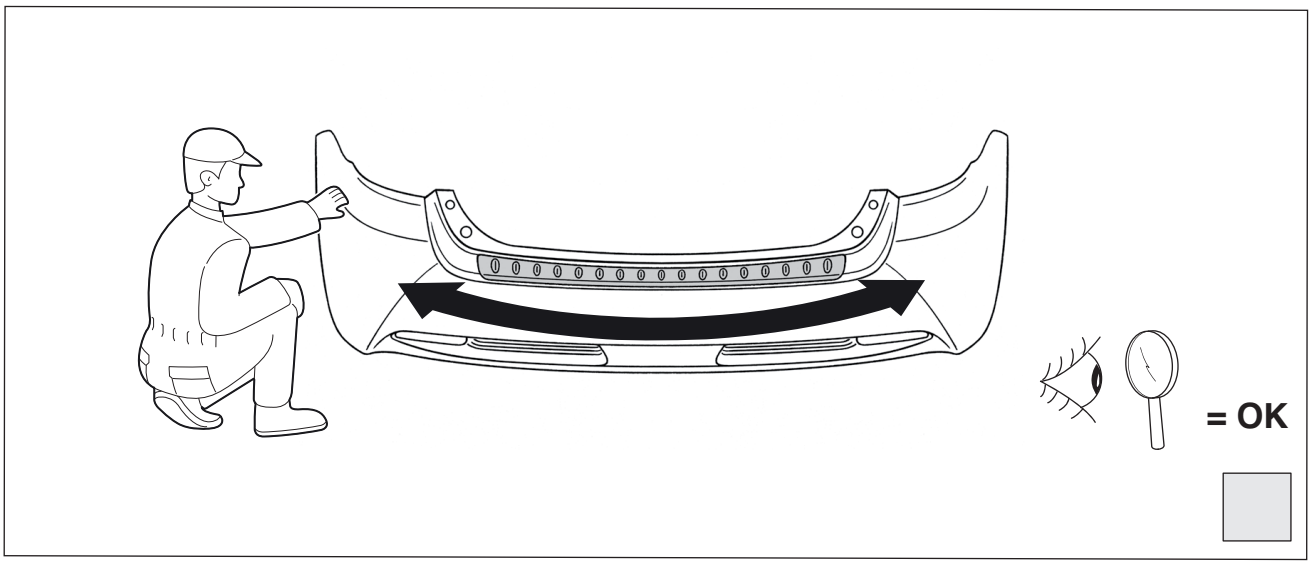

Installation Date:	Technician Name & Signature:	Stamp:
. . / . . /		

TOYOTA