A000A01A-GAT

This Owner's Manual should be considered a part of the car and remain with it when it is sold for the use of the next owner.

OWNER'S I.D.

ORIGINAL: NAME: _____

ADDRESS: STREET: _____

TOWN: _____

COUNTRY: _____

P.CODE: _____

DATE OF SALE: _____

SUBSEQUENT: NAME: _____

ADDRESS: STREET: _____

TOWN: _____

COUNTRY: _____

P.CODE: _____

TRANSFER DATE: _____

HYUNDAI

XG 250
XG 300
XG 350

HXGS001

OWNER'S MANUAL

A030A02L-GAT

Operation
Maintenance
Specifications

All information in the Owner's Manual is current at the time of publication. Hyundai reserves the right to make changes at any time as part of our policy of continual product improvement may be carried out.

This manual applies to current Hyundai XG250, XG300, XG350 models and explanations of optional as well as standard equipment are included. As a result, you may find material in this manual that does not apply to your specific vehicle.

Please note that some XG250, XG300, XG350 models are equipped with Right-Hand Drive (RHD). The explanations and illustrations for some operations in RHD models are opposite of those written in this manual.

A020A01A-AAT

RESPONSIBILITY FOR MAINTENANCE

The maintenance requirements for your new Hyundai are found in Section 5. As the owner, it is your responsibility to see that all maintenance operations specified by the manufacturer are carried out at the appropriate intervals. When the vehicle is used in severe driving conditions, more frequent maintenance is required for some operations. Maintenance requirements for severe operating conditions are also included in Section 5.

A040A01A-AAT

FOREWORD

Thank you for choosing Hyundai. We are pleased to welcome you to the growing number of discriminating people who drive Hyundais. The advanced engineering and high-quality construction of each Hyundai we build is something of which we're very proud.

Your Owner's Manual will introduce you to the features and operation of your new Hyundai. It is suggested that you read it carefully because the information it contains can contribute greatly to the satisfaction you receive from your new car.

The manufacturer also recommends that all service and maintenance on your car be performed by an authorized Hyundai dealer. Hyundai dealers are prepared to provide high-quality service, maintenance and any other assistance that may be required.

A050A04A-AAT

HYUNDAI MOTOR COMPANY

Note: Because future owners will also need the information included in this manual, if you sell this Hyundai, please leave the manual in the vehicle for their use. Thank you.

CAUTION:
Severe engine and transaxle damage may result from the use of poor quality fuels and lubricants that do not meet Hyundai specifications. You must always use high quality fuels and lubricants that meet the specifications listed on Page 9-4 in the Vehicle Specifications section of the Owner's Manual.

Copyright 2002 Hyundai Motor Company. All rights reserved. No part of this publication may be reproduced, stored in any retrieval system or transmitted in any form or by any means without the prior written permission of Hyundai Motor Company.

A070A01A-GAT

CAUTION: MODIFICATIONS TO YOUR HYUNDAI

Modification of components may void the manufacturer's warranty
Your Hyundai should not be modified in any way. Modifications may adversely affect the safety, durability and performance of your Hyundai. Components which are subjected to modification or are added to the vehicle resulting in consequential damage are not covered by the vehicle manufacturer's warranty.

A080A01S-AAT

TWO-WAY RADIO OR CELLULAR TELEPHONE INSTALLATION

Your vehicle is equipped with electronic fuel injection and other electronic components. It is possible for an improperly installed/adjusted two-way radio or cellular telephone to adversely affect electronic systems. For this reason, we recommend that you carefully follow the radio manufacturer's instructions or consult your Hyundai dealer for precautionary measures or special instructions if you choose to install one of these devices.

TABLE OF CONTENTS

SECTION	PAGE	
1. FEATURES OF YOUR HYUNDAI	1-1	1
2. DRIVING YOUR HYUNDAI	2-1	2
3. WHAT TO DO IN AN EMERGENCY	3-1	3
4. CORROSION PREVENTION & APPEARANCE CARE	4-1	4
5. VEHICLE MAINTENANCE REQUIREMENTS	5-1	5
6. DO-IT-YOURSELF MAINTENANCE	6-1	6
7. EMISSION CONTROL SYSTEMS	7-1	7
8. CONSUMER INFORMATION	8-1	8
9. VEHICLE SPECIFICATIONS	9-1	9
10. INDEX	10-1	10

A090A01A-AAT

SAFETY AND VEHICLE DAMAGE WARNING

This manual includes information titled as WARNING, CAUTION and NOTE. These titles indicate the following:

WARNING:
This indicates that a condition may result in harm, serious injury or death to you or other persons if the warning is not heeded. Follow the advice provided with the warning.

CAUTION:
This indicates that a condition may result in damage to your vehicle or its equipment if the caution is not heeded. Follow the advice provided with the caution.

NOTE:
This indicates that interesting or helpful information is being provided.

A100A01L-GAT

GUIDE TO HYUNDAI GENUINE PARTS

1.What are Hyundai Genuine Parts?

Hyundai Genuine Parts are the same parts used by Hyundai Motor Company to manufacture vehicles. They are designed and tested for the optimum safety, performance, and reliability to our customers.

2. Why should you use genuine parts?

Hyundai Genuine Parts are engineered and built to meet rigid original manufacturing requirements. Using imitation, counterfeit or used salvage parts are not covered under the Hyundai New Vehicle Limited Warranty or any other Hyundai warranty. In addition, any damage to or failure of Genuine Hyundai Parts caused by the installation or failure of an imitation, counterfeit or used salvage part is not covered by Hyundai Motor Company.

3. How can you tell if you purchasing Hyundai Genuine Parts?

Look for the Hyundai Genuine Parts Logo on the package (see below).

The export specifications are written in English only.

Hyundai Genuine Parts are only sold through authorized Hyundai Dealership and Service Center.

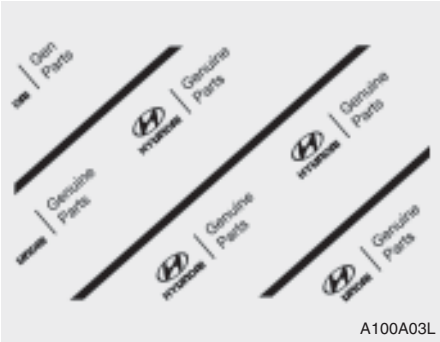

A100A03L

A100A01L

A100A02L

A100A04L

B250A01L-GAT

INSTRUMENTS AND CONTROLS (LEFT-HAND DRIVE)

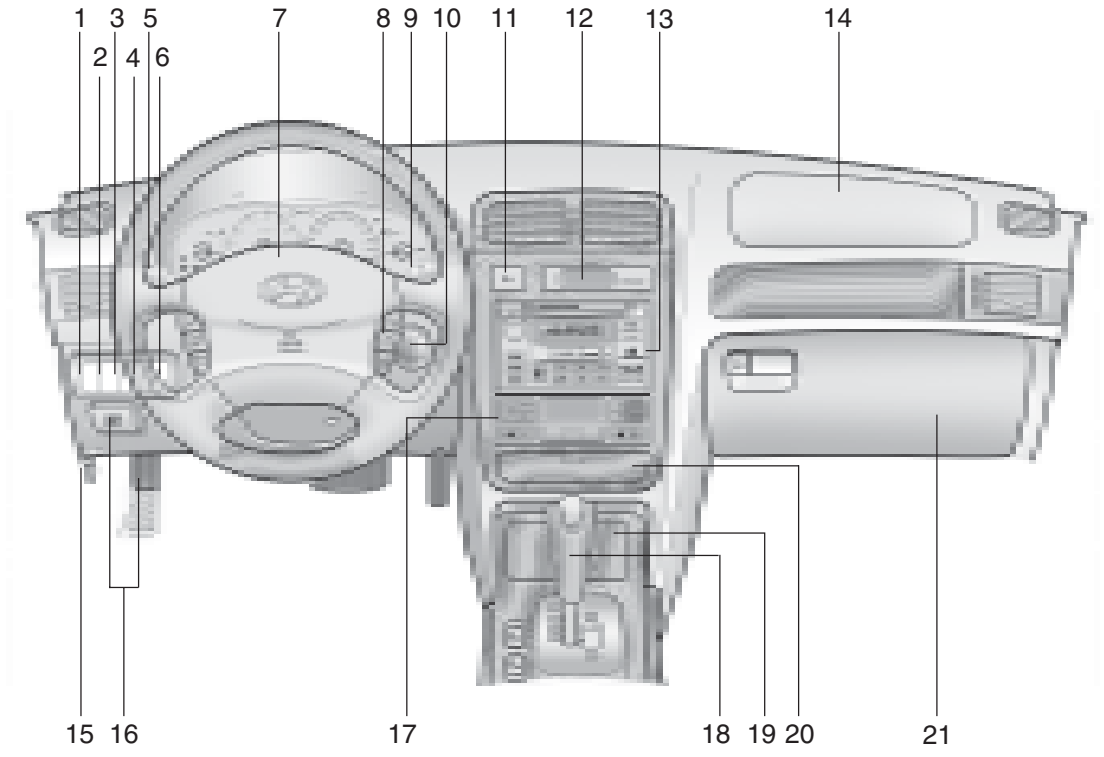

B250A02L

1. Headlight Leveling Switch (If installed)
2. Rear Fog Light Switch (If installed)
3. Panel Brightness Control Knob (Rheostat Switch)
4. Traction Control Switch (If installed)
5. Multi-Function Light Switch
6. Cruise Control Main Switch (If installed)
7. Horn and Driver's Airbag
8. Cruise Control Switch/ Audio Remote Control Switch (If installed)
9. Windshield Wiper/Washer Switch
10. Ignition Switch
11. Hazard Warning Switch
12. Digital Clock
13. Audio System (If installed)
14. Passenger's Airbag (If installed)
15. Hood Release Lever
16. Parking Brake Release Lever/Parking Brake (Foot type)
17. Heater/Air Conditioning Control Panel
18. Shift Lever (If installed)
19. Ashtray
20. Accessory Box
21. Glove Box

CAUTION:

When installing a container of liquid air freshener inside the vehicle, do not place it near the instrument cluster nor on the instrument panel pad surface. If there is any leakage from the air freshener onto these areas (Instrument cluster, instrument panel pad or air ventilator), it may damage these parts. If the liquid from air freshener does leak onto these areas, wash them with water immediately.

B250B01L-GAT

INSTRUMENTS AND CONTROLS (RIGHT-HAND DRIVE)

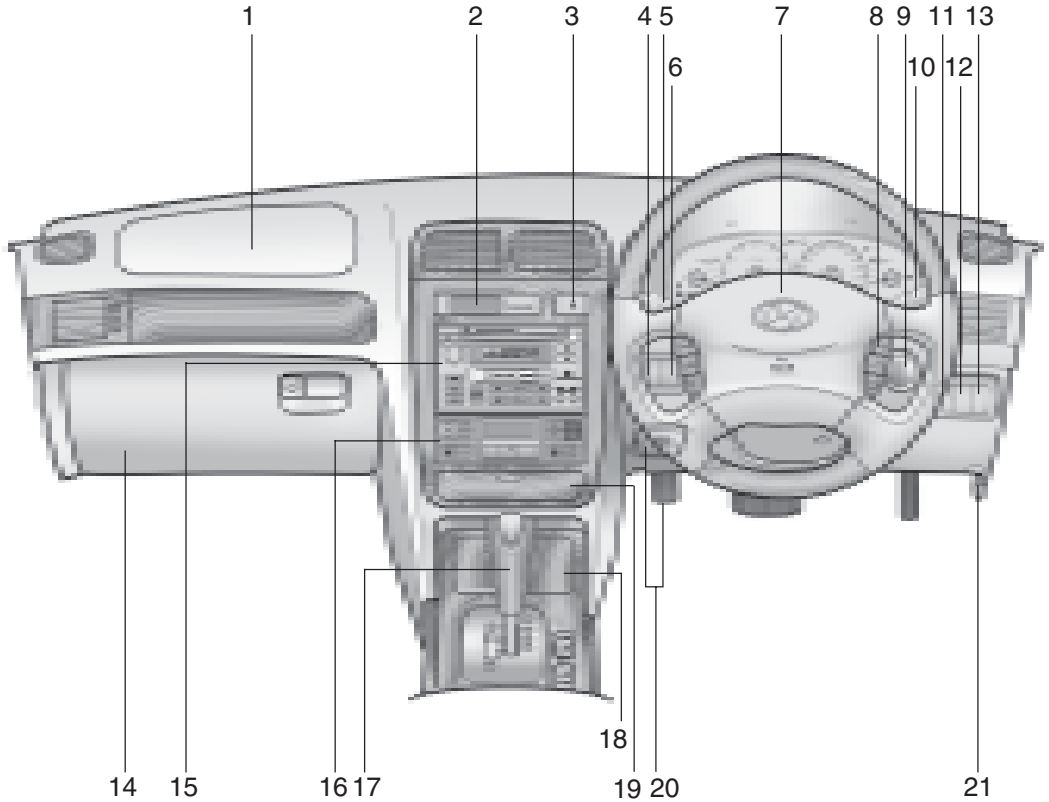

1. Passenger's Airbag (If installed)
2. Digital Clock
3. Hazard Warning Switch
4. Cruise Control Main Switch (If installed)
5. Multi-Function Light Switch
6. Traction Control Switch (If installed)
7. Horn and Driver's Airbag
8. Cruise Control Switch/ Audio Remote Control Switch (If installed)
9. Ignition Switch
10. Windshield Wiper/Washer Switch
11. Panel Brightness Control Knob (Rheostat Switch)
12. Rear Fog Light Switch (If installed)
13. Headlight Leveling Switch (If installed)
14. Glove Box
15. Audio System (If installed)
16. Heater/Air Conditioning Control Panel
17. Shift Lever (If installed)
18. Ashtray
19. Accessory Box
20. Parking Brake Release Lever/Parking Brake (Foot type)
21. Hood Release Lever

CAUTION:

When installing a container of liquid air freshener inside the vehicle, do not place it near the instrument cluster nor on the instrument panel pad surface. If there is any leakage from the air freshener onto these areas (Instrument cluster, instrument panel pad or air ventilator), it may damage these parts. If the liquid from air freshener does leak onto these areas, wash them with water immediately.

B255A01L-GAT

INDICATOR SYMBOLS ON THE INSTRUMENT PANEL

- Turn Signal Indicator Lights
- ABS Service Reminder Indicator
- Traction Control Indicator Light
- Seat Belt Warning Light
- High Beam Indicator Light
- Trunk Lid Open Warning Light
- Front Fog Indicator Light
- Low Oil Pressure Warning Light
- Parking Brake/Low Brake Fluid Level Warning Light
- Charging System Warning Light
- Door Ajar Warning Light and Chime
- Low Fuel Level Warning Light
- SRS (Airbag) Service Reminder Indicator
- Cruise Indicator
- Stop/Tail Light Failure Warning Light
- Malfunction Indicator Light

* A more detailed explanations of these items will be found beginning on page 1-41

1. FEATURES OF YOUR HYUNDAI

Fuel Recommendations 1-2
Breaking In Your New Hyundai 1-3
Key (Immobilizer System) 1-4
Door Locks (Theft-Alarm System) 1-6
Power Windows 1-10
Seat (Power Seat) 1-11
I.M.S (Integrated Memory System) 1-15
Seat Belt 1-18
Child Restraint System 1-23
Supplemental Restraint (AIRBAG) System 1-31
Instrument Cluster and Indicator Lights 1-39
Warning Light and Indicator 1-41
Multi-function Light Switch 1-48
Windshield Wiper/Washer Switch 1-50
Trip Computer 1-53
Sunroof 1-57
Mirror 1-62
Hood Release 1-68
Cruise Control 1-72
Audio Rmote Control Switch 1-75
Heating and Cooling Control 1-76
Stereo Sound System 1-91
Audio System 1-93
Antenna 1-115

B010A02A-GAT

FUEL RECOMMENDATIONS

Use Unleaded Gasoline

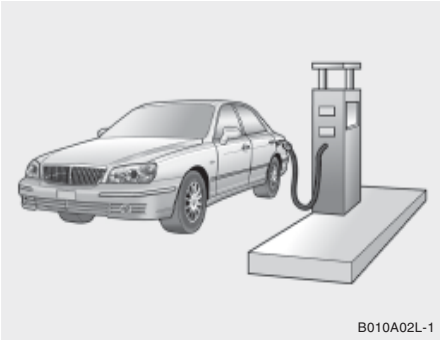

Unleaded gasoline with a Pump Octane Rating of 87 (Research Octane Number 91) or higher must be used in Hyundai vehicle. If leaded gasoline is used, it will cause the catalytic converter to become ineffective and the emission control system to malfunction.

This can also result in increased maintenance expense. To avoid accidental use of leaded fuel, the large nozzle used with leaded gasoline at service stations can not be inserted into fuel tank opening of Hyundai vehicle.

NOTE:

- **For some countries, Hyundai vehicles are designed to use leaded gasoline. When you are going to use leaded gasoline, ask to Hyundai dealer whether leaded gasoline in your vehicle is available or not.**
- **Octane Rating of leaded gasoline is same with unleaded one.**

B010B01A-AAT

What About Gasohol?

Gasohol (a mixture of 90% unleaded gasoline and 10% ethanol or grain alcohol) may be used in your Hyundai. However, if your engine develops driveability problems, the use of 100% unleaded gasoline is recommended. Fuels with unspecified quantities of alcohol, or alcohols other than ethanol, should not be used.

B010D01S-AAT

Do not Use Methanol

Fuels containing methanol (wood alcohol) should not be used in your Hyundai. This type of fuel can reduce vehicle performance and damage components of the fuel system.

CAUTION:

Your Hyundai's New Vehicle Limited Warranty may not cover damage to the fuel system and performance problems that are caused by the use of methanol or fuels containing methanol.

B010E01A-AAT

Gasolines for Cleaner Air

To help contribute to cleaner air, Hyundai recommends that you use gasolines treated with detergent additives, which help prevent deposit formation in the engine. These gasolines will help the engine run cleaner and enhance performance of the Emission Control System.

B010F01A-AAT

Operation in Foreign Countries

If you are going to drive your Hyundai in another country, be sure to:

- o Observe all regulations regarding registration and insurance.
- o Determine that acceptable fuel is available.

B020A01S-GAT

BREAKING IN YOUR NEW HYUNDAI

During the First 2,000 Km (1,200 Miles)

No formal "break-in" procedure is required with your new Hyundai. However, you can contribute to the economical operation and durability of your Hyundai by observing the following recommendations during the first 2,000 km (1,200 miles).

- o Don't drive faster than 88 km/h (55 mph).
- o While driving, keep your engine speed (rpm, or revolutions per minute) between 2,000 rpm and 4,000 rpm.
- o Use moderate acceleration. Don't start, depress the accelerator pedal fully.
- o For the first 300 km (200 miles), try to avoid hard stops.
- o Don't lug the engine (in other words, don't drive so slowly in too high a gear that the engine "bucks": shift to a lower gear).
- o Whether going fast or slow, vary your speed from time to time.
- o Don't let the engine idle longer than 3 minutes for a catalytic converter equipped engine.
- o Don't tow a trailer during the first 2,000 km (1,200 miles) of operation.

B030A01Y-AAT

KEYS

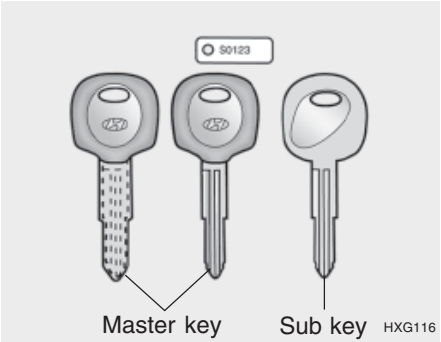

For greater convenience, your Hyundai has two master keys and a sub key. The master keys will open all locks on your vehicle. The sub key will only function in the ignition and the door locks.
Leaving your sub key with a parking attendant will ensure that your vehicle's trunk, trunk lid release, glove box compartment and rear trunk access may not be unlocked in your absence.

NOTE:

Before leaving your sub key with a parking attendant, make sure that the lock levers of the rear seat back

lock and the trunk lid lock are switched to the "LOCK" position.

B030B01A-AAT

Record Your Key Number

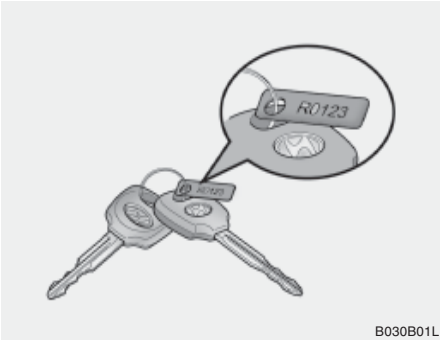

A code number is stamped on the number plate that came with the keys to your Hyundai. This key number plate should not be left with the keys but kept in a safe place, not in the vehicle. The key number should also be recorded in a place where it can be found in an emergency.
If you need additional keys, or if you should lose your keys, your authorized Hyundai dealer can make new keys if you can supply the key number.

B880A01A-GAT

IMMOBILIZER SYSTEM (If Installed)

The immobilizer system is an anti-theft device, designed to deter automobile theft.

B880B03Y-GAT

Three Types of Keys

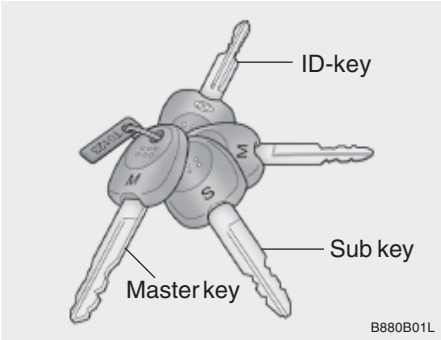

For greater convenience, your Hyundai has three types of keys as shown in the illustration.

1) ID key
   This key must be used first to register a unique ID code in the ICM.
2) Master key
   This key is for general use. It will open all locks on your vehicle. One side of the key has the Hyundai logo and the other side has the "M" symbol.
3) Sub key
   Similar to the master key, this key will only function in the ignition and the door locks, but it will not operate the trunk and the glove box. One side of the key has the Hyundai logo and the other side has a "S" symbol.
4) Leaving your sub key with a parking attendant will ensure that your vehicle's trunk, trunk lid release, glove box compartment and rear trunk access may not be unlocked in your absence.

NOTE:

Before leaving your sub key with a parking attendant, make sure that the lock levers of the seat back lock and the trunk lid lock are switched to the "LOCK" position.

CAUTION:
Don't lose your ID key or forget the password. Always keep your ID key in a place where you remember and record your password. If you don't have both the password and ID key, consult your authorized Hyundai dealer.

5) If you need additional keys or if you should lose your keys, your authorized Hyundai dealer can make new keys if you can supply the key number and ID key.

NOTE:
If you make your own duplicate key, you will not be able to cancel the system or start the engine.

B880C01A-GAT
Key Numbers

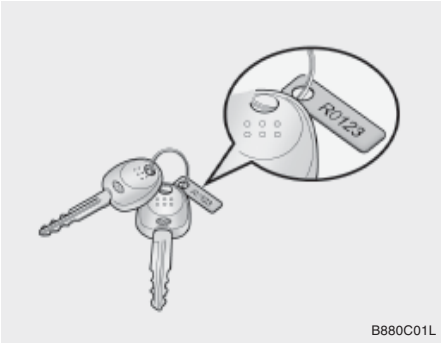

B880C01L

The vehicle key number is recorded upon a metal tag attached to the keys when the vehicle is first delivered to you.
The key number should be recorded and kept in a safe place in case the need to order further keys arises. New keys are available from any Hyundai dealer by quoting the relevant key number.
In the interest of security, the metal tag attached to the keys which bears the key number should be removed from the key ring after you receive your new vehicle. In addition, key numbers cannot be provided by Hyundai for security reasons.

If you need additional keys or if you should lose your keys, your authorized Hyundai dealer can make new keys if you can supply the key number and ID key.

B030C01L-AAT
ILLUMINATED IGNITION SWITCH

B030C01L

Whenever a door is opened, the ignition switch will be illuminated for your convenience, provided the ignition switch is not in the "ON" position.
The light will go off approximately 10 seconds after closing the door or when the ignition switch is turned on.

B040A01A-AAT

DOOR LOCKS

WARNING:

- **Unlocked doors can be dangerous. Before you drive away (especially if there are children in the car), be sure that all the doors are securely closed and locked so that the doors cannot be inadvertently opened from the inside. This helps ensure that the doors will not be opened accidentally. Also, when combined with the proper use of seat belts, locking the doors helps keep occupants from being ejected from the car in case of an accident.**
- **Before opening the door, always look for and avoid oncoming traffic.**

B040B01A-AAT

Locking and unlocking front doors with a key

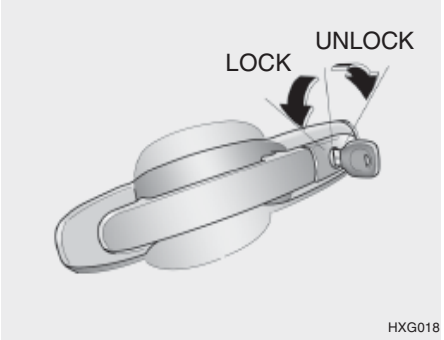

- The door can be locked or unlocked with a key.
- Lock the door by turning the key toward the front of the vehicle and unlock it by turning the key toward the rear.

B040C02Y-AAT

Locking From the Outside

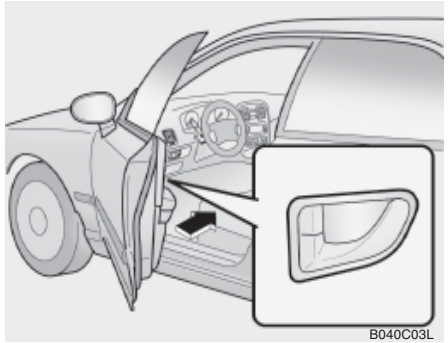

The doors can be locked without a key. To lock the doors, first push the inside lock switch to the "LOCK" position, so that the red mark on the switch is not visible, then closed the door.
The door will not lock if the key is left in the ignition switch when the front doors close. This is normal.

NOTE:

- **When locking the door this way, be careful not to lock the door with the ignition key left in the vehicle.**

- **To protect against theft, always remove the ignition key, close all windows, and lock all doors and the trunk lid when leaving your vehicle unattended.**

B040D01S-AAT

Locking From the Inside

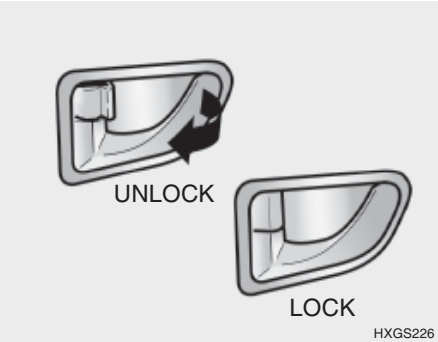

To lock the doors from the inside, simply close the door and push the lock switch to the "LOCK" position. When this is done, neither the outside nor the inside door handle can be used.

NOTE:

When the door is locked, the red mark on the switch is not visible.

B040E03A-AAT

CHILD-PROTECTOR REAR DOOR LOCK

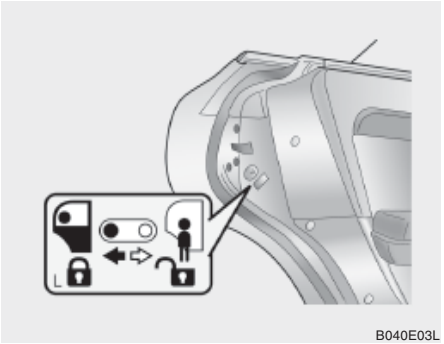

Your Hyundai is equipped with a "child-protector" rear door lock assembly. When the lock mechanism is engaged, the rear door cannot be opened from the inside. Its use is recommended whenever there are small children in the rear seat.

To engage the child-protector feature so that the door cannot be opened from the inside, move the child-protector lever to the " 🔒 " position and close the door. Move the lever to the opposite direction of the " 🔒 " position when normal door operation is desired.

If you wish to be able to open the door from the outside, the outside door handle will function normally.

B040G01L-AAT

Central Door Locks

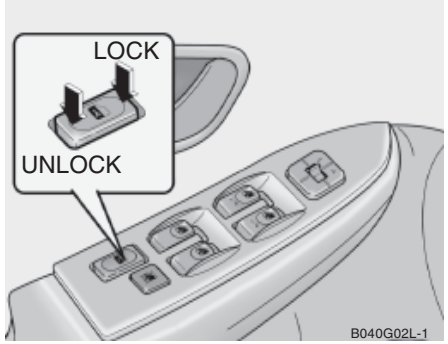

The central door locking switch is located on the driver's arm rest. It is operated by depressing the door lock switch. If any door is open when the switch is depressed, the door will remain locked when closed.

NOTE:

- **When pushing the front portion of the driver's door lock switch, all vehicle doors will lock.**

- **When pushing the rear portion of the switch, all vehicle doors will unlock.**

B070A01S-AAT

THEFT-ALARM SYSTEM (If installed)

This system is designed to provide protection from unauthorized entry into the car. This system is operated in three stages: the first is the "Armed" stage, the second is the "Alarm" stage, and the third is the "Disarmed" stage. If triggered, the system provides an audible alarm siren.

B070B03Y-AAT

Armed Stage

Park the car and stop the engine. Arm the system as described below.

1) Remove the ignition key from the ignition switch.
2) Make sure that the engine hood and trunk lid are locked.
3) Lock the doors using the transmitter of the keyless entry system.

After completion of the steps above, the turn signal light will blink once to indicate that the system is armed.

NOTE:

1) If any door, trunk lid or engine hood remains open, the system will not be armed.
2) If this happens, rearm the system as described above.

CAUTION:

Do not arm the system until all passengers have left the car. If the system is armed while a passenger(s) remains in the car, the alarm may be activated when the remaining passenger(s) leaves the car.

B070C03L-AAT

Alarm Stage

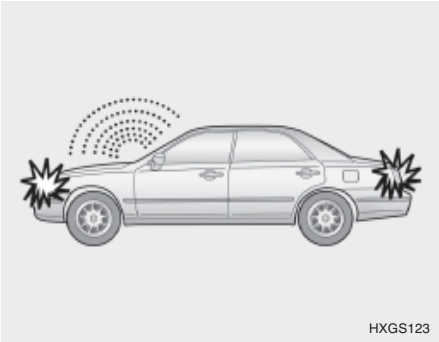

The alarm will be activated if any of the following occurs while the car is parked and the system is armed.

1) A front or rear door is opened without using the transmitter.
2) The trunk lid is opened without using the transmitter.
3) The engine hood is opened.

The turn signal light will blink continuously and the siren will sound for 27 seconds. (EC only/Except E.C: 3 times). To turn off the system, unlock the door or trunk lid with the transmitter.

CAUTION:
Avoid trying to start the engine while the system is armed.

B070D03L-AAT
Disarmed Stage

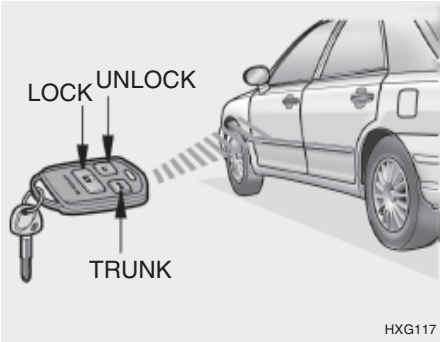

The system will be disarmed when the following step is taken:

The driver's or passenger's door is unlocked by depressing the " " button on the transmitter.
After completion of the steps above, the turn signal light will blink twice to indicate that the system is disarmed.

NOTE:
Once the system has been disarmed, it can not be rearmed except by repeating the arming procedures.

CAUTION:
Only the transmitter can disarm the armed stage. If the transmitter does not disarm the system, it is necessary to take the following steps;

1. **Unlock the door with the key, which will cause the alarm to be activated.**
2. **Insert the key in the ignition key cylinder and turn the ignition key to "ON" position.**
3. **Wait for 30 seconds.**

After completing the steps above, the system will be disarmed.

Keyless Entry System
Locking doors

1. Close all doors.
2. Push the " " button on the transmitter.
3. All doors will lock and the turn signal light will blink once to indicate that the system is armed.

Unlocking doors

1. Push the " " button on the transmitter.
2. All doors will unlock and the turn signal light will blink twice to indicate that the system is disarmed.

Releasing the trunk lid

Push the " " button on the transmitter for longer than 1 second.

B070E02HP-GAT

Replacing the battery

When the transmitter's battery begins to get weak, it may take several pushes on the button to lock or unlock the doors, and the LED will not light. Replace the battery as soon as possible.

Battery type : CR2032

Replacement instructions:

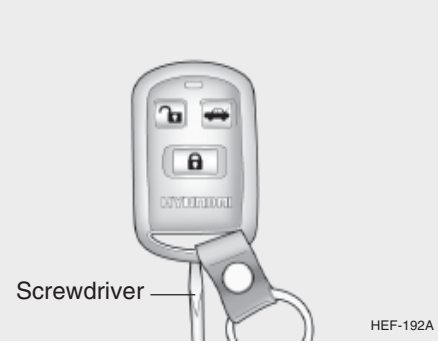

1. Separate the case with a blade screwdriver as shown in the illustration.

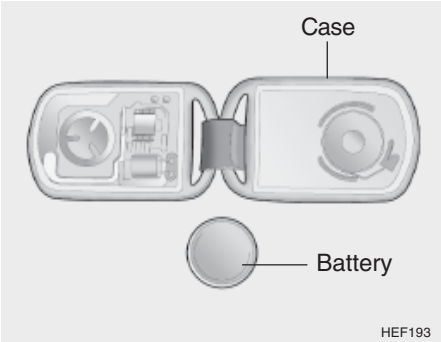

2. Remove the old battery from the case and note the polarity. Make sure the polarity of the new battery is the same(+side facing down), then insert it in the transmitter.

B060A02L-AAT

POWER WINDOWS

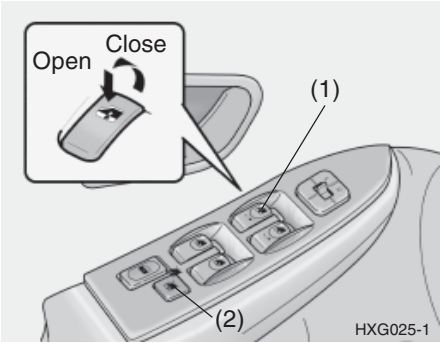

The power windows operate when the ignition key is in the "ON" position. The main switches are located on the driver's armrest and control the front and rear windows on both sides of the vehicle. The windows may be opened by depressing the appropriate window switch and closed by pulling up the switch. To open the window on the driver's side, press the switch(1) halfway down. The window moves as long as the switch is operated. To fully open the driver's window automatically, press the switch fully down. In automatic operation, the window will fully open

even if you let go of the switch. To stop at the desired opening, pull up and release the switch.

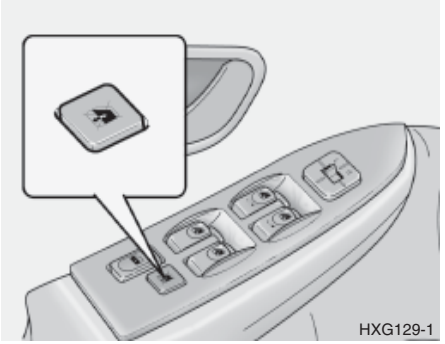

In order to prevent operation of the windows, a window lock switch(2) is provided on the armrest of the driver's door. To disable the power windows, press the window lock switch. To revert to normal operation, press the window lock switch a second time. The power windows can be operated for 30 seconds after the ignition key is turned to the "ACC" or the "LOCK" position. However while the front doors are opened with the key turned to "LOCK" and removed, the power windows cannot be operated.

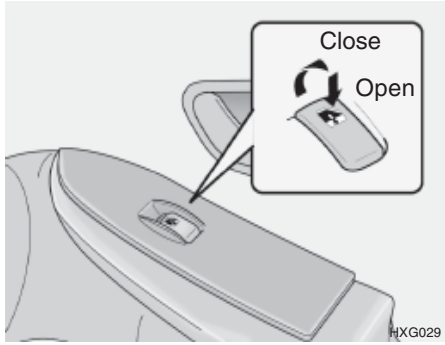

WARNING:

1) Be careful that someone's head, hands and body are not trapped by a closing window.
2) Never try to operate the main switch on the driver's door and the individual door window switch in opposing directions at the same time. If this is done, the window will stop and cannot be opened or closed.
3) Do not leave children alone in the car. Always remove the ignition key for their safety.

B080A01A-AAT

ADJUSTABLE FRONT SEATS

WARNING:

Never attempt to adjust the seat while the vehicle is moving. This could result in loss of control, or an accident which may cause death, serious injury, or property damage.

B080B01A-AAT

Adjusting Seat Forward and Rearward

To move the seat toward the front or rear, pull the lock release lever upward. This will releases the seat on its track so you can move it forward or rearward to the desired position. When you find the position you want, release the lever and slide the seat forward or rearward on its track until it locks into the desired position and cannot be moved further.

B080C01A-AAT

Adjusting Seatback Angle

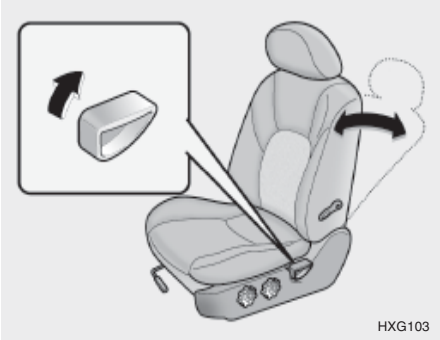

To recline the seatback, lean forward to take your weight off it, then pull up on the recliner control lever at the outside edge of the seat. Now lean back until the desired seatback angle is achieved. To lock the seatback into position, release the recliner control lever.

WARNING:

To minimize risk of severe injury in the event of a collision or a sudden stop, both the driver and passenger seatbacks should always be in an upright position while the vehicle is in motion. The protection provided by the seat belts and airbags in a frontal collision may be reduced significantly when the seatbacks are reclined. There is greater risk that the driver and passenger will slide under the belt which may result in serious injury if a crash occurs when the seatbacks are reclined.

The seat belt cannot provide full protection to an occupant if the seat back is reclined.

B080D01L-GAT

Adjustable Headrests

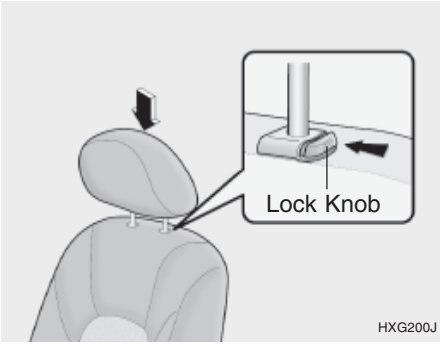

Headrests are designed to help reduce the risk of neck injuries.

To raise the headrest, pull it up. To lower it, push it down while pressing the lock knob. If equipped with a horizontally adjustable type of headrest, pull on the top.

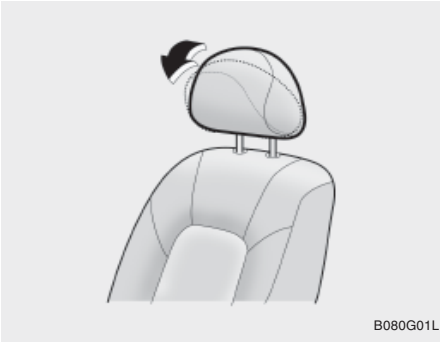

WARNING:

- **For maximum effectiveness in case of an accident the headrest should be adjusted so the top of the headrest is at the same height as the top of the occupant's ears. For this reason, the use of a cushion that holds the body away from the seatback should not be recommended.**
- **Do not operate vehicle with the headrests removed as injury to the occupants may occur in the event of an accident. Headrests may provide protection against neck injuries when properly adjusted.**

B080E01L-AAT

Lumbar Support Control

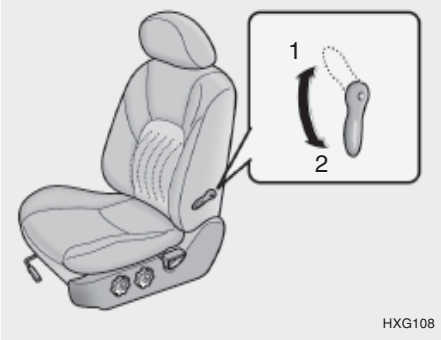

To adjust the lumbar support, turn the handle on the outboard or left side of the seat. To increase the amount of lumbar support, pull the lever forward. To decrease it, push the lever toward the rear.

1. Minimum support
2. Maximum support

B080F01S-AAT

Seat Cushion Height Adjustment (Driver's Seat Only)

To raise or lower the front part of the seat cushion, turn the front knob forward or rearward. To raise or lower the rear part of the seat cushion, turn the rear knob forward or rearward.

B090A02L-AAT

POWER SEAT (If installed)

The front seat can be adjusted appropriately by using the control knob on the left side of the seat. Before driving, adjust the seat to the proper position so as to easily control the steering wheel, pedals and switches on the instrument panel.

CAUTION:

Do not operate two knobs at the same time.

WARNING:

- **Never attempt to adjust the seat while the vehicle is moving. This could result in loss of control, and an accident causing death, serious injury, or property damage.**
- **Do not sit or lean unnecessarily close to the airbag to get better protection during its deployment in case of an accidents.**

B090B01Y-AAT

Adjusting Seat Forward and Rearward

Pull the control knob forward or backward to move the seat forward or backward to the desired position. Release the knob and then the seat will remain at that position.

1. Seat Back Reclining Control Knob
2. Seat Cushion Forward, Rearward and Height Adjusting Control Knob

WARNING:

To ensure the seat is locked securely, attempt to move the seat forward or backward without using the control knob.

B090C01Y-AAT

Seat Cushion Height Adjustment

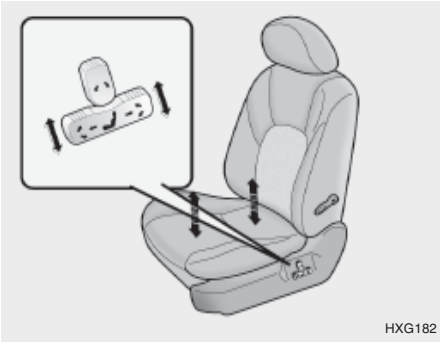

Move the front portion of the control knob up or down to raise or lower the front part of the seat cushion. Move the rear portion of the control knob up or down to raise or lower the rear part of the seat cushion.

B090D01Y-AAT

Adjusting Seatback Angle

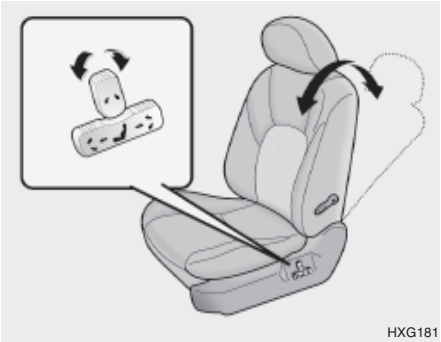

Rotate the upper portion of the control knob forward or backward to recline the seatback to the desired position. Release the control knob and then the seatback will remain in that position.

WARNING:

To minimize the risk of personal injury in the event of a collision or a sudden stop, both the driver's and passenger's seatback should remain in an upright position while the car is in motion. The protection provided by the seat belts and airbags may be reduced significantly when the seatbacks are reclined. There is a greater risk that the seat occupants will slide under the belt resulting in serious injury if a crash occurs when the seatbacks are reclined. The seat belt cannot provide full protection to an occupant if the seat back is reclined.

B090E03L-GAT

I.M.S (Integrated Memory System) (If installed)

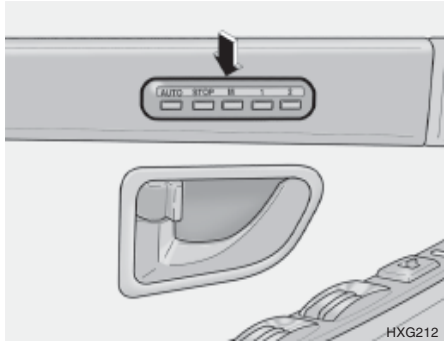

Your vehicle is equipped with I.M.S on the left side of driver's door. After adjusting the position of the driver's seat, outside rearview mirrors and steering wheel column (if installed the steering wheel electric tilt and telescopic), use the I.M.S to memorize them. Two different driving position profiles can be entered in the I.M.S. If you turn the ignition key to the "ON" position, the memorized position is adjusted automatically.

To memorize the driving position

1. Turn the ignition key "ON".
2. Adjust the driver's seat, outside rearview mirrors and steering wheel column (if installed the steering wheel electric tilt and telescopic) to the desired position.
3. Push the "M" button on the I.M.S until the signal beeps.
4. Within five seconds, push button "1" or "2" until the signal beeps twice. The beep sounds mean that the positions are memorized in the I.M.S.

CAUTION:

In the following conditions, the I.M.S will not operate.

1. **When the "1" or "2" button is not pushed within five seconds.**
2. **When the seat is being adjusted.**
3. **When the "STOP" button is pushed.**

To activate the memorized position

When you push button "1" or "2", the driving position will be automatically adjusted to the position recorded for that button.

To activate the "AUTO" button

When the "AUTO" button is "ON", it will move the driver's seat forward or rearward and steering wheel column up/down or inward/outward, so you can get on or off comfortably.

- o It will move driver's seat rearward and steering wheel column up/down or inward/outward, when the ignition key is pulled out.
- o It will move driver's seat forward and steering wheel column to the original position, when the ignition key is inserted.
- o While the vehicle is moving backward, the outside rearview mirrors will automatically move downward to change the area visible with the outside mirrors.

NOTE:

If the remote control outside rearview mirror switch knob is located in the middle position of the switch, the outside rearview mirrors will not operate while the vehicle is moving backward. When the shift lever is moved the "R" position, only the passenger's outside rearview mirror will move downward.

B100A01Y-AAT

SEAT WARMER (If installed)

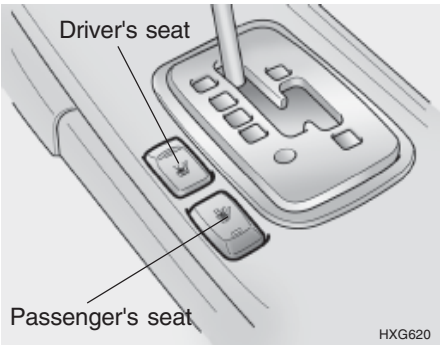

The seat warmer is provided to warm the front seats during cold weather. With the ignition key in the "ON" position, push either of the switches to warm the driver's seat or the passenger's seat.

During mild weather or under conditions where the operation of the seat warmer is not needed, keep the switches in the "OFF" position.

B140A01S-AAT

REAR SEAT WARNING

For the safety of all passengers, luggage or other cargo should not be piled higher than the top of the seatback. In addition, do not place objects on the rear shelf as they may move forward during braking or in an accident and strike vehicle passengers.

B110A01L-GAT

FOLDING REAR SEATBACKS

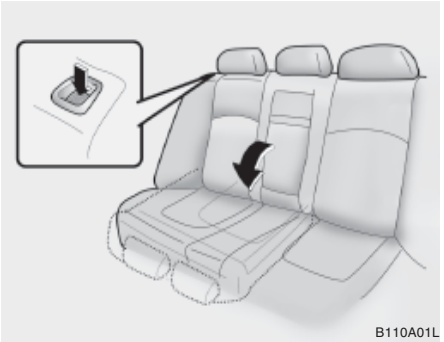

- To unlock the seatback, depress the seatback locking button, then pull forward on the seatback panel.
- When you return the seatback to its upright position, always be sure it has locked into position by pulling and pushing on the top of the seatback.

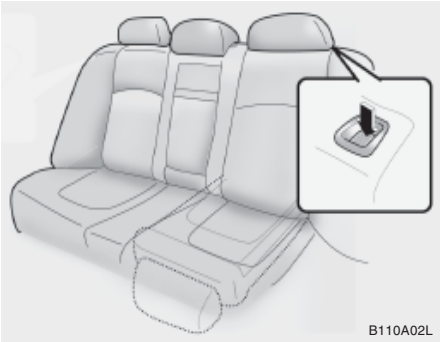

WARNING:

The purpose of the folding rear seatbacks is to allow you to carry longer objects than could otherwise be accommodated. Do not allow passengers to sit on top of the folded down seatback. This could result in injury in case of an accident or a sudden braking as this is not a designated seating position and seat belt restraint systems are not accessible when the seatbacks are folded down.

B120A01Y-GAT

REAR SEATBACK SAFETY LOCK (If installed)

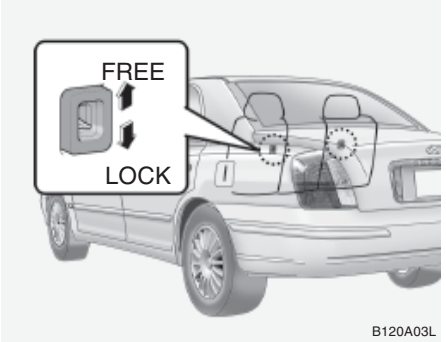

If the rear seatback lock lever (located on the backside of the rear seatback) is in the "LOCK" position when the rear seatbacks are closed, it will not be possible to fold the rear seatback by using the release lock lever. In this instance, move the lock lever to the "FREE" position and fold the rear seatback. The rear seatback lock lever is designed to provide protection from unauthorized entry into the trunk.

B150A02A-GAT

SEAT BELT PRECAUTIONS

All occupants of the vehicle should wear their seat belts at all times. Indeed, your province's laws may require that some or all occupants of the vehicle use seat belts.
The possibility of injury or the severity of injury in an accident will be decreased if this elementary safety precaution is observed. In addition, the following recommendations are made:

B150B01Y-GAT

Infant or Small Child

Some countries require the use of child restraint systems for infants and small children. Whether this is required by law or not, it is strongly recommended that a child restraint seat or infant restraint system be used for infants or small children weighing less than 18 kilograms (40 pounds).

NOTE:

Small children are best protected in an accident when properly restrained by a child restraint system.

B150C02A-AAT
Larger Children

Children who are too large for child restraint systems should always occupy the rear seat and use the available lap/shoulder belts. The lap portion should be fastened snug on the hips and as low as possible. Check belt fit periodically. A child's squirming could put the belt out of position. Children are afforded the most safety in the event of an accident when they are restrained by a proper restraint system in the rear seat. If a larger child (over age 13) must be seated in the front seat, the child should be securely restrained by the available lap/shoulder belt and the seat should be placed in the rear most position. Children under the age of 13 should be restrained securely in the rear seat. NEVER place a child under the age of 13 in the front seat. NEVER place a rear facing child seat in the front seat of a vehicle.

B150D01A-AAT
Pregnant Women

The use of a seat belt is recommended for pregnant women to lessen the chance of injury in an accident. When a seat belt is used, the lap belt portion should be placed as low and snugly as possible on the hips, not across the abdomen. For specific recommendations, consult a physician.

B150E01A-AAT
Injured Person

A seat belt should be used when an injured person is being transported. When this is necessary, you should consult a physician for recommendations.

B150F01A-AAT
One Person Per Belt

Two people (including children) should never attempt to use a single seat belt. this could increase the severity of injuries in case of an accident.

B150G01A-AAT
Do Not Lie Down

To reduce the chance of injuries in the event of an accident, and to achieve maximum effectiveness of the restraint system, all passengers should be sitting up and the front seats should be in an upright position when the car is moving. A seat belt cannot provide proper protection if the person is lying down in the rear seat or if the front seat is in a reclined position.

WARNING:
Sitting in a reclined position or lying down when your vehicle is in motion can be dangerous. Even if you buckle up, your seat belts can't do their job when you're reclined.
The shoulder belt can't do its job because it won't be against your body. Instead, it will be in front of you. In a crash you could go into it, receiving serious neck or other injuries.
The lap belt can't do its job either. In a crash the belt could go up over your abdomen. The belt forces would be applied there, not at your strong pelvic bones.

This could cause serious internal injuries.
For proper protection when the vehicle is in motion, have the seatback upright. Then sit back in the seat and wear your seat belt properly.
See page 1-21

B160A01A-AAT

CARE OF SEAT BELTS

Seat belt systems should never be disassembled or modified. In addition, care should be taken to assure that seat belts and belt hardware are not damaged by seat hinges, doors or other abuse.

WARNING:
When you return the rear seatback to its upright position after the rear seatback was folded down, be careful not to damage the seat belt webbing or buckle. Be sure that the webbing or buckle does not get caught or pinched in the rear seat.

B160B01A-AAT

Periodic Inspection

It is recommended that all seat belts be inspected periodically for wear or damage of any kind. Parts of the system that are damaged should be replaced as soon as possible.

B160C01A-AAT

Keep Belts Clean and Dry

Seat belts should be kept clean and dry. If belts become dirty, they can be cleaned by using a mild soap solution and warm water. Bleach, dye, strong detergents or abrasives should not be used because they may damage and weaken the fabric.

B160D01A-AAT

When to Replace Seat Belts

Entire in-use seat belt assembly or assemblies should be replaced if the vehicle has been involved in an accident. This should be done even if no damage is visible. Additional questions concerning seat belt operation should be directed to your Hyundai Dealer.

B170A01L-GAT

HEIGHT ADJUSTABLE FRONT SEAT SHOULDER BELT

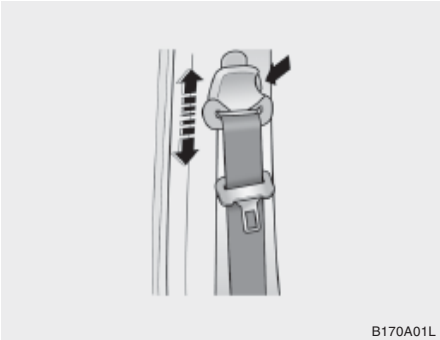

You can adjust the height of the shoulder belt anchor to one of the 4 positions for maximum comfort and safety.
If the height of the adjusting seat belt is too near your neck, you will not be getting the most effective protection. The shoulder portion should be adjusted so that it lies across your chest and midway over your shoulder nearest the door and not your neck.
To adjust the height of the seat belt anchor, lower or raise the height adjuster into an appropriate position. To raise the height adjuster, pull it up. To lower it, push it down while pressing the height adjuster button.

Release the button to lock the anchor into position. Try sliding the height adjuster to make sure that it has locked into the position.

WARNING:

- **The height adjuster must be in the locked position when the vehicle is moving.**
- **The misadjustment of height of the shoulder belt could reduce the effectiveness of the seat belt in a crash.**

B180A01L-GAT

SEAT BELTS-Driver's 3-Point System with Emergency Locking Retractor

To Fasten Your Belt

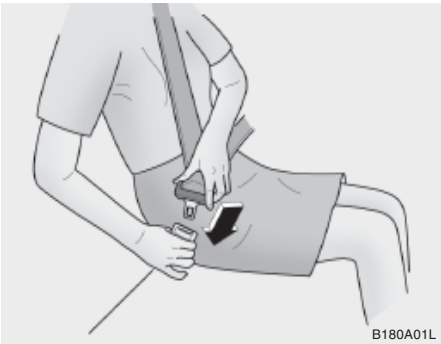

To fasten your seat belt, pull it out of the retractor and insert the metal tab into the buckle. There will be an audible "click" when the tab locks into the buckle.

The seat belt automatically adjusts to the proper length only after the lap belt is adjusted manually so that it fits snugly around your hips. If you lean forward in a slow, easy motion, the belt will extend and let you move around. If there is a sudden stop or impact, however, the belt will lock into position. It will also lock if you try to lean forward too quickly. Check to make sure that the belt is properly locked and that the belt is not twisted.

B200A01A-GAT

Adjusting Your Seat Belt

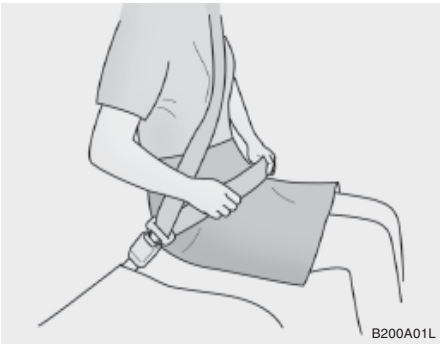

You should place the belt as low as possible on your hips, not on your waist. If the belt is located too high on your body, you could slide under it in case of accident or a sudden stop. This could result of death, serious injury or property damage. Both arms should not be under or over the belt. Rather, one should be over and the other under, as shown in the illustration.

Never wear the seat belt under the arm nearest the door.

B210A01A-AAT

To Release the Seat Belt

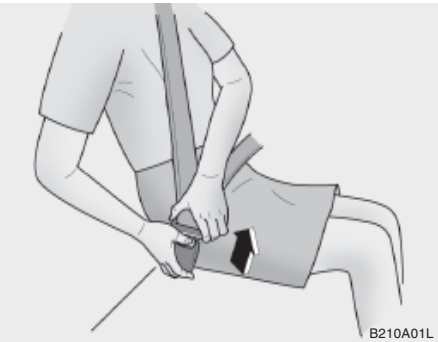

The seat belt is released by pressing the release button in the locking buckle. When it is released, the belt should automatically draw back into the retractor.
If this does not happen, check the belt to be sure it is not twisted, then try again.

B220A01L-AAT

SEAT BELTS - Rear Seat Center's 3-Point System With Emergency Locking Retractor

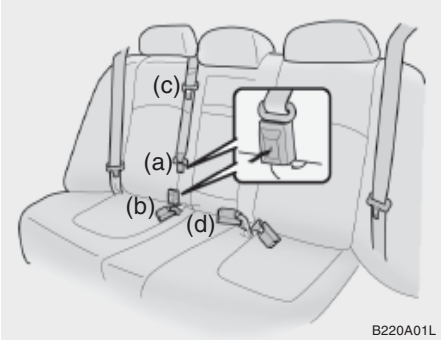

1. Before fastening the rear seat center belt, confirm the metal tab (a) and buckle (b) are latched together.
2. After confirming that (a) and (b) are latched, pull the seat belt out of the retractor and insert the metal tab (c) into the buckle (d).

There will be an audible "click" when the tab locks in the buckle. The seat belt automatically adjusts to the proper length only after the lap belt is adjusted manually so that it fits snugly around your hips. If you lean forward in a slow, easy motion, the belt will extend and let you move around. If there is a sudden stop or impact, the belt will lock into position. It will also lock if you try to lean forward too quickly.

WARNING:

- **When using the rear seat center belt, you must lock all metal tabs and buckles. If any metal tab or buckle is not locked, it will increase the chance of injury in the event of collision.**
- **Never unlock the metal tab (a) and the buckle (b) with the following exceptions.**
  1) **In case of folding rear seatbacks down.**
  2) **If transporting an object on the rear seat may cause damage to the rear seat center belt.**
- **Lock the metal tab (a) and the buckle (b) immediately after folding rear seatbacks up.**
- **To disconnect the metal tab (a) from the buckle (b), insert a sharp-ended tool into the groove located on the buckle (b).**

B220C01Y-GAT

To Release the Seat Belt

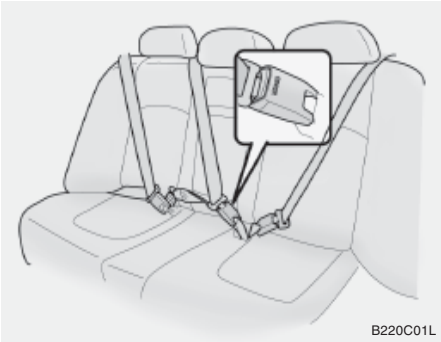

When you want to release the seat belt, press the button in the locking buckle.

WARNING:

The center belt latching mechanism is different from those for the rear seat shoulder belts. When fastening the rear seat shoulder belts or the rear seat center belt, make sure they are inserted into the correct buckles to obtain maximum protection from the seat belt system and assure proper operation.

B230A02A-GAT

CHILD RESTRAINT SYSTEM (If installed)

Children riding in the car should sit in the rear seat and must always be restrained to minimize the risk of injury in an accident, sudden stop or sudden maneuver. According to accident statistics, children are safer when properly restrained in the rear seats than in the front seat. Larger children not in a child restraint should use one of the seat belts provided.

You are required by law to use safety restraints for children. If small children ride in your vehicle you must put them in a child restraint system (safety seat). Children could be injured or killed in a crash if their restraints are not properly secured. For small children and babies, a child seat or infant seat must be used. Before buying a particular child restraint system, make sure it fits your car seat and seat belts, and fits your child. Follow all the instructions provided by the manufacturer when installing the child restraint system.

WARNING:

- **A child restraint system must be placed in the rear seat. Never install a child or infant seat on the front passenger's seat.**
  Should an accident occur and cause the passenger side airbag to deploy, it could severely injure or kill an infant or child seated in an infant or child seat. Thus, only use a child restraint in the rear seat of your vehicle.
- **Since a safety belt or child restraint system can become very hot if it is left in a closed vehicle, be sure to check the seat cover and buckles before placing a child there.**
- **When the child restraint system is not in use, store it in the trunk or fasten it with a safety belt so that it will not be thrown forward in the case of a sudden stop or an accident.**
- **Children who are too large to be in a child restraint should sit in the rear seat and be restrained with the available lap/shoulder belts.**
  Never allow children to ride in the front passenger seat.
- **Always make sure that the shoulder belt portion of the outboard lap/shoulder belt is positioned midway over the shoulder, never across the neck. Moving the child closer to the center of the vehicle may help provide a good shoulder belt fit. The lap belt portion of the lap/shoulder belt or the center seat lap belt must always be positioned as low as possible on the child's hips and as snug as possible.**
- **If the seat belt will not properly fit the child, Hyundai recommends the use of an approved booster seat in the rear seat in order to raise the child's seating height so that the seat belt will properly fit the child.**
- **Never allow a child to stand up or kneel on the seat.**
- **Never use an infant carrier or child safety seat that "hooks" over a seatback; it may not provide adequate security in an accident.**
- **Never allow a child to be held in a person's arms while they are in a moving vehicle, as this could result in serious injury to the child in the event of an accident or a sudden stop. Holding a child in a moving vehicle does not provide the child with any means of protection during an accident, even if the person holding the child is wearing a seat belt.**
- **If the child restraint seat is not anchored properly, the risk of a child being seriously injured or killed in a collision greatly increases.**

B235G01Y-GAT

Installation on Center Rear Seats

Use the center seat belt for the rear to secure the child restraint system as illustrated. After installation of the child restraint system, rock the child seat back and forth, and side to side to ensure that it is properly secured by the seat belt.

If the child seat moves, readjust the length of the seat belt. Then, if equipped, insert the child restraint tether strap hook into the child restraint hook holder and tighten to secure the seat. Always refer to the child restraint system manufacturer's recommendation before installing the child restraint system in your vehicle.

B230G01A-GAT

Installation on the Outboard Rear Seats

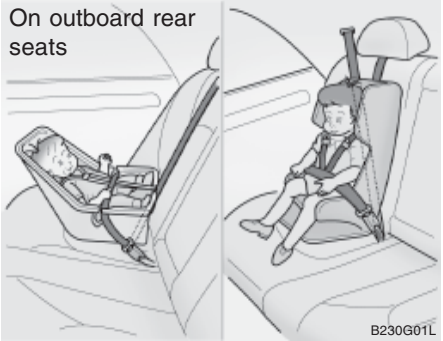

To install a child restraint system on the outboard rear seats, extend the shoulder/lap belt from its retractor. Buckle the seat belt and allow the seat belt to take up any slack. Make sure that the lap portion of the belt is tight around the child restraint system and the shoulder portion of the belt is positioned so that it cannot interfere with the child's head or neck. After installation of the child restraint system, try to move it in all directions to be sure the child restraint system is securely installed.

If you need to tighten the belt, pull more webbing toward the retractor. When you unbuckle the seat belt and allow it to retract, the retractor will automatically revert back to its normal seated passenger emergency locking usage condition.

NOTE:

- **Before installing the child restraint system, read the instructions supplied by the child restraint system manufacturer.**
- **If the seat belt does not operate as described, have the system checked immediately by your authorized Hyundai dealer.**

WARNING:

Do not install any child restraint system in the front passenger seat. Should an accident occur and cause the passenger's side airbag to deploy, it could severely injure or kill an infant or child seated in an infant or child seat. Therefore, only use a child restraint system in the rear seat of your vehicle.

B230B01E-GAT

Using a Child Restraint System With "Tether Anchorage" System

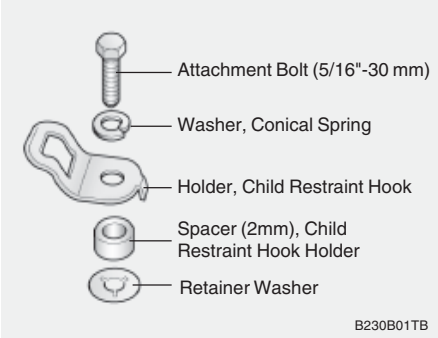

For small children and babies, the use of a child seat or infant seat is strongly recommended. This child seat or infant seat should be of appropriate size for the child and should be installed in accordance with the manufacturer's instructions. It is further recommended that the seat be placed in the vehicle's rear seat since this can make an important contribution to safety. Your vehicle is provided with three child restraint hook holders for installing the child seat or infant seat.

B230C03A-GAT

Securing a Child Restraint System With "Tether Anchorage" System

Three child restraint hook holders are located on the rear seat package tray.

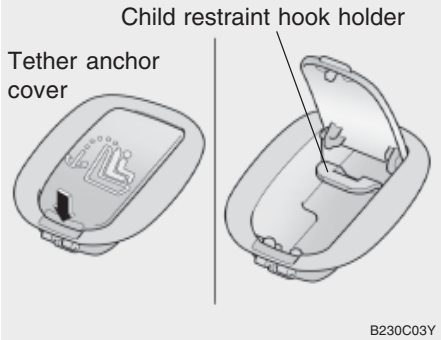

1. Open the tether anchor cover on the rear seat package tray.

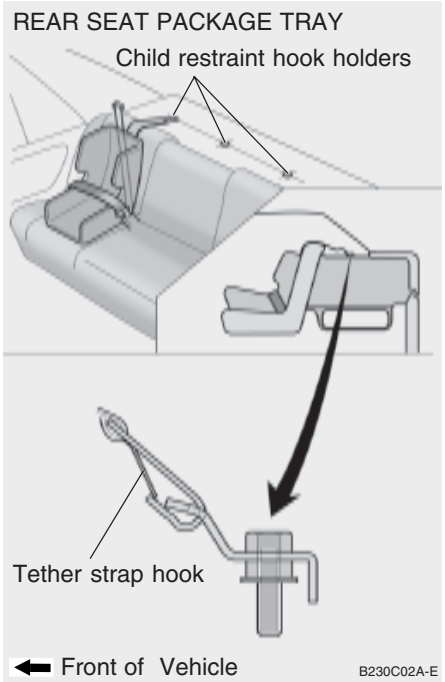

2. Route the child restraint seat strap over the seatback.
   For vehicles with adjustable headrests, route the tether strap under the headrest and between the headrest posts, otherwise route the tether strap over the top of the seatback.

3. Connect the tether strap hook to the child restraint hook holder and tighten to secure the seat.

B230C03E-GAT

Securing a Child Restraint System With "ISOFIX" System and "Tether Anchorage" System

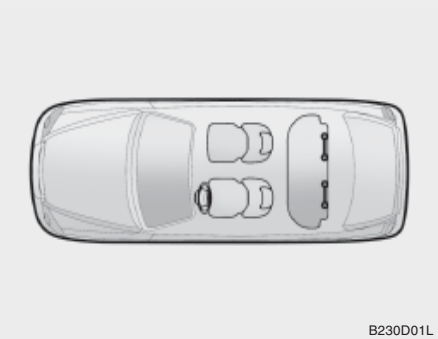

B230D01L

ISOFIX is a standardised method of fitting child seats that eliminates the need to use the standard adult seat belt to secure the seat in the vehicle. This enables a much more secure and positive location with the added benefit of easier and quicker installation.

An ISOFIX-seat can only be installed if it has vehicle-specific approval in accordance with the requirements of ECE-R44. For your Hyundai, the Hyundai ISOFIX GR 1 / Hyundai Duo/ Römer ISOFIX GR1 and the Römer Duo ISOFIX / Britax Duo ISOFIX is approved according to the requirement ECE-R44. This seat has been tested extensively by Hyundai and is recommended for your Hyundai.

NOTE:

At present, this seat is the only one complying with that provision. In case that other manufacturers will furnish proof of a respective certification, Hyundai is going to evaluate this seat carefully and will give a recommendation provided that seat complies to the law. Please ask your Hyundai dealer in this respect.

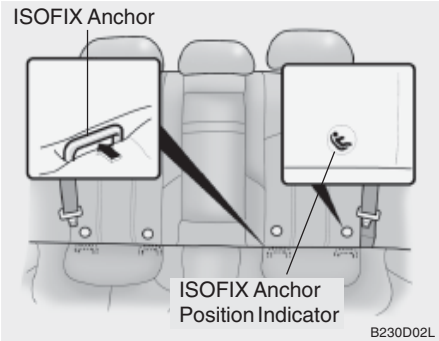

B230D02L

On each side of the rear seat, between the cushion and backrest, are located a pair of ISOFIX anchorage points together with a top tether mounting on the luggage compartment. During the installing, the seat has to be engaged at the anchorage-points in a way you can hear it clicking (check by pulling!) and has to be fixed with the TopTether-belt on the belonging point in the luggage-compartment. The installing and the use of a child-seat has to be done according to the installing-manual, which is added to the ISOFIX-seat.

NOTE:
An ISOFIX-child-seat can only be installed if the seat has a vehicle-specific approval according to ECE-R44. Before using the ISOFIX-child-seat, which was bought for an other car, ask your Hyundai-dealer whether this seat-type is approved and recommended for your Hyundai.

To secure the child restraint seat

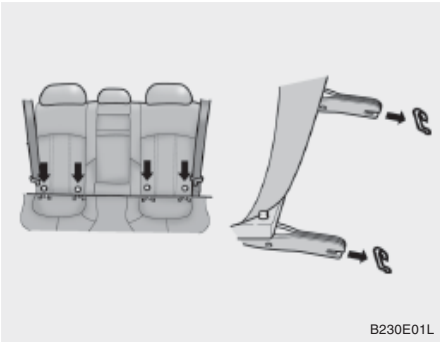

1. To engage the child restraint seat to the ISOFIX anchor, insert the child restraint seat latch into the ISOFIX anchor. Listen for the audible "click" sound.
2. Connect the tether strap hook to the child restraint hook holder and tighten to secure the seat. Refer to "Securing a Child Restraint System With Tether Anchorage System" on page 1-26.

WARNING:
- **Do not install a child restraint seat at the center of the rear seat using the vehicle's ISOFIX anchors. The ISOFIX anchors are only provided for the left and right outboard rear seating positions. Do not misuse the ISOFIX anchors by attempting to attach a child restraint seat in the middle of the rear seat to the ISOFIX anchors. In a crash, the child restraint seat ISOFIX attachments may not be strong enough to secure the child restraint seat properly in the center of the rear seat and may break, causing serious injury or death.**
- **Do not mount more than one child restraint to a child restraint lower anchorage point. The improper increased load may cause the anchorage points or tether anchor to break, causing serious injury or death.**
- **Attach the ISOFIX or ISOFIX-compatible child restraint seat only to the appropriate locations shown in the illustration.**
- **Always follow the installation and use instructions provided by the manufacturer of the child restraint.**

B230H01L-GAT

Child Seat Restraint Suitability For Seat Position

Use child safety seats that have been officially approved and are appropriate for your children. When using the child safety seats, refer to the following table.

Age Group	Seating Position		
	Front Passenger	Rear Outboard	Rear Center
0 : Up to 10 kg (0 ~ 9 months)	X	U	UF
0+ : Up to 13 kg (0 ~ 2 years)	X	U	UF
I : 9kg to 18kg (9 months ~ 4 years)	X	U, L1	UF
II & III : 15kg to 36kg (4 ~ 12 years)	X	UF	UF

U :Suitable for "universal" category restraints approved for use in this mass group

UF :Suitable for forward-facing "universal" category restraints approved for use in this mass group

L1: Suitable for "Römer ISOFIX GR1" approved for use in this mass group (Approval No: E1 R44-03301133)

X : Seat position not suitable for children in this mass group

B180B01HP-GAT

Pre-tensioner Seat Belt

Your Hyundai vehicle is equipped with driver's and front passenger's pre-tensioner seat belts. The purpose of the pre-tensioner is to make sure that the seat belts fit tightly against the occupant's body in certain frontal collisions.

The pre-tensioner seat belts can be activated alone or, where the frontal collision is severe enough, together with the airbags.

The pre-tensioner seat belt operates in a similar way as an Emergency Locking Retractor (ELR) type of seat belt. When the vehicle stops suddenly, or if the occupant tries to lean forward too quickly, the seat belt retractor will lock into position. However, in certain frontal collisions, the pre-tensioner will activate and pull the seat belt into tighter contact against the occupant's body.

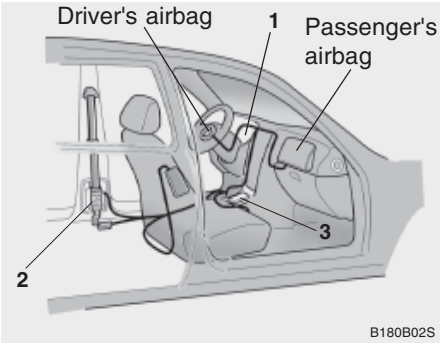

The seat belt pre-tensioner system consists mainly of the following components.

Their locations are shown in the illustration.

1. SRS airbag warning light
2. Seat belt pre-tensioner assembly
3. SRS control module

WARNING:

To obtain maximum benefit from a pre-tensioner seat belt:

1. The seat belt must be worn correctly.
2. The seat belt must be adjusted to the correct position.

NOTE:

- **Both the driver's and front passenger's pre-tensioner seat belts will be activated in certain frontal collisions. The pre-tensioner seat belts can be activated alone or, where the frontal collision is severe enough, together with the airbags.**
- **When the pre-tensioner seat belts are activated, a loud noise may be heard and fine dust, which may appear to be smoke, may be visible in the passenger compartment. These are normal operating conditions and are not hazardous.**
- **Although it is harmless, the fine dust may cause skin irritation and should not be breathed for prolonged periods. Wash your hands and face thoroughly after an accident in which the pre-tensioner seat belts were activated.**

CAUTION:

- **Because the sensor that activates the SRS airbag is connected with pre-tensioner seat belt, the SRS airbag warning light AIR BAG on the instrument panel will blink for approximately 6 seconds after the ignition key has been turned to the "ON" position, and then it should turn off.**
- **If pre-tensioner seat belt is not working properly, this warning light will illuminate even if there is no malfunction of the SRS airbag. If the SRS airbag warning light does not illuminate when the ignition key is turned to "ON" or if it remains illuminated after blinking for approximately 6 seconds, or if it illuminates while the**

vehicle is being driven, please have an authorized Hyundai dealer inspect the pre-tensioner seat belt or SRS airbag system as soon as possible.

WARNING:

- **Pre-tensioners are designed to operate only one time. After activation, pre-tensioner seat belts must be replaced. All seat belts, of any type, should always be replaced after they have been worn during a collision.**
- **The pre-tensioner seat belt assembly mechanisms become hot during activation. Do not touch the pre-tensioner seat belt assemblies for several minutes after they have been activated.**
- **Do not attempt to inspect or replace the pre-tensioner seat belts yourself. This must be done by an authorized Hyundai dealer.**
- **Do not strike the pre-tensioner seat belt assemblies.**
- **Do not attempt to service or repair the pre-tensioner seat belt system in any manner.**
- **Improper handling of the pre-tensioner seat belt assemblies, and failure to heed the warnings to not strike, modify, inspect, replace, service or repair the pre-tensioner seat belt assemblies may lead to improper operation or inadvertent activation and serious injury.**
- **Always wear the seat belts when driving or riding in a motor vehicle.**

B240A02Y-AAT

SUPPLEMENTAL RESTRAINT (AIRBAG) SYSTEM (If Installed)

B240A01L

Your Hyundai is equipped with a Supplemental Restraint (Airbag) System. The indications of the system's presence are the letters "SRS AIR BAG" embossed on the airbag pad cover in the steering wheel and the passenger's side front panel pad above the glove box.

The Hyundai SRS consists of airbags installed under the pad covers in the center of the steering wheel and the passenger's side front panel above the glove box. The purpose of the SRS is to provide the vehicle's driver and/or

the front passenger with additional protection than that offered by the seat-belt system alone, in case of a frontal impact of sufficient severity.

NOTE:
Be sure to read information about the SRS on the labels provided on the backside of the sun visor and in the glove box.

WARNING:

- **As its name implies, the SRS is designed to work with, and be supplemental to, the driver's and the passenger's three point seat belt systems and is not a substitute for them. Therefore, your seat belts must be worn at all times while the vehicle is in motion. The airbags deploy only in certain frontal impact conditions severe enough to likely cause significant injury to the vehicle occupants.**
- **The SRS is designed to deploy the airbags only when an impact is sufficiently severe and when the impact angle is less than 30° from the forward longitudinal axis of the vehicle and will not deploy in side, rear or rollover impacts. Additionally, the airbags will only deploy once. Thus, seat belts must be worn at all times.**
- **Front airbags are not intended deploy in light collisions in which protection can be provided by the seat belt.**

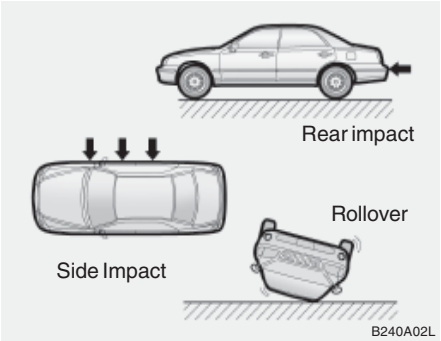

- **Front airbags are not intended to deploy in side-impact, rear-impact or rollover crashes. In addition, airbags will not deploy in frontal crashes below the deployment threshold speed.**
- **The driver should sit back as far as possible while still maintaining control of the vehicle. If you are sitting too close to the airbag, it can cause death or serious injury when it inflates.**
- **No objects should be placed over or near the airbag modules on the steering wheel, instrument panel, and the front passenger's panel above the glove box, because any such object could cause harm if the vehicle is in a crash severe enough to cause the airbags to deploy.**
- **If the airbags deploy, they must be replaced by an authorized Hyundai dealer.**

- **Do not tamper with or disconnect SRS wiring, or other components of the SRS system. Doing so could result in injury, due to accidental firing of the airbags or by rendering the SRS inoperative.**
- **Do not install a child restraint system in the front passenger seat position. A child restraint system must never be placed in the front seat. The infant or child could be severely injured or killed by an airbag deployment in case of an accident.**
- **Do not allow children to ride in the front passenger seat. If older children (teenagers and older) must ride in the front seat, make sure they are always properly belted and that the seat is moved back as far as possible.**

- **For maximum safety protection in all types of crashes, all occupants including the driver should always wear their seat belts whether or not an airbag is also provided at their seating position to minimize the risk of severe injury or death in the event of a crash. Do not sit or lean unnecessarily close to the airbag while the vehicle is in motion.**
- **The SRS airbag system must deploy very rapidly to provide protection in a crash. If an occupant is out of position because of not wearing a seat belt, the airbag may forcefully contact the occupant causing serious or fatal injuries.**

B240B02A-GAT

SRS Components and Functions

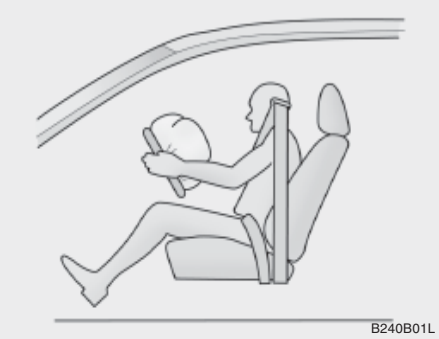

The SRS consists of the following components:

- Driver's Airbag Module
- Passenger's Airbag Module
- SRS Service Reminder Indicator (SRI)
- SRS Control Module (SRSCM)

The SRSCM continually monitors all elements while the ignition is "ON" to determine if a frontal or near-frontal impact is severe enough to require airbag deployment.

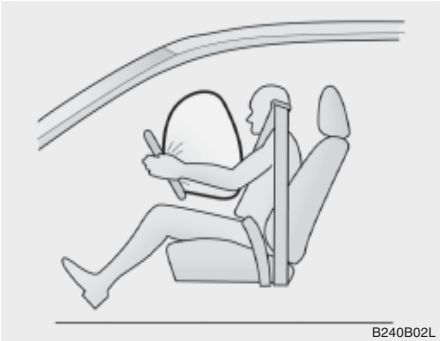

The SRS service reminder indicator (SRI) on the instrument panel will blink for about 6 seconds after the ignition key is turned to the "ON" position or after the engine is started, after which the SRI should go out.

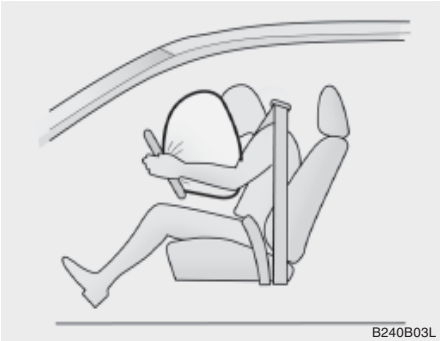

The airbag modules are located both in the center of the steering wheel and in the front passenger's panel above the glove box. When the SRSCM detects a considerable impact to the front of the vehicle, it will automatically deploy the airbags.

Upon deployment, tear seams molded directly into the pad covers will separate under pressure from the expansion of the airbags. Further opening of the covers then allows full inflation of the airbags.

A fully inflated airbag in combination with a properly worn seat belt slows the driver's or the passenger's forward motion, thus reducing the risk of head or chest injury.

After complete inflation, the airbag immediately starts deflating, enabling the driver to maintain forward visibility.

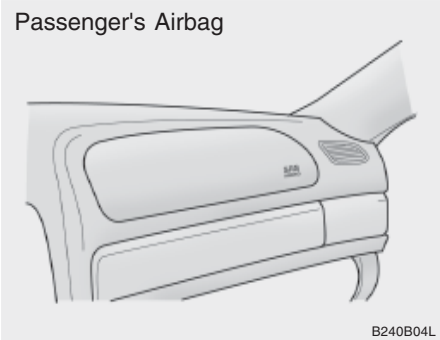

CAUTION:

When installing a container of liquid air freshener inside a vehicle, do not place it near the instrument cluster nor on the instrument panel pad surface. If there is any leakage from the air freshener onto these areas (Instrument cluster, instrument panel pad or air ventilator), it may damage these parts. If the liquid from air freshener does leak onto these areas, wash them with water immediately.

WARNING:

- **When the SRS is activated, there may be a loud noise and fine dust will be released throughout the vehicle. These conditions are normal and are not hazardous. However, the fine dust generated during airbag deployment may cause skin irritation. Wash your hands and face thoroughly with lukewarm water and a mild soap after an accident in which the airbags were deployed.**
- **The SRS can function only when the ignition key is in the "ON" position. If the SRS SRI does not come on, or continuously remains on, after flashing for about 6 seconds when the ignition key is turned to the "ON" position, or after the engine is started, comes on while driving, the SRS is not working properly. If this occurs, have your vehicle immediately inspected by your Hyundai dealer.**
- **Before you replace a fuse or disconnect a battery terminal, turn the ignition key to the "LOCK" position or remove the ignition key. Never remove or replace the air bag related fuse(s) when the ignition key is in the "ON" position. Failure to heed this warning will cause the SRS SRI to illuminate.**

B990A04Y-GAT

PASSENGER PRESENCE DETECTION (If installed)

The passenger presence detection system detects the presence of a passenger in the front seat. If no passenger is recognized on the front passenger seat, the deployment of the front passenger and/or side airbag and seat belt pretentioner will be inhibited.
This system is designed primarily to prevent the replacement of airbag components that deploy needlessly in an accident.

NOTE:

Luggage or other cargo heavier than 15 kg should not be placed on the passenger front seat. This can allow the deployment of the front passenger and/or side air bag in the case of an accident.

WARNING:

The Passenger Presence Detection system is not intended to prevent airbag deployment while a child is in the front passenger's seat. It is intended only as a means to reduce unnecessary collision damage repair expense by preventing airbag and seat belt pretensioner deployment when the right front passenger seat is unoccupied. Deployment is still possible if only a few pounds are placed upon the seat. Therefore, children must not be transported in the front seat. All children must be seated in the rear seat and properly restrained with the vehicle's restraint system or a child restraint system appropriate for the child's size and weight.

B990B04Y-GAT

Side Impact Airbag (If installed)

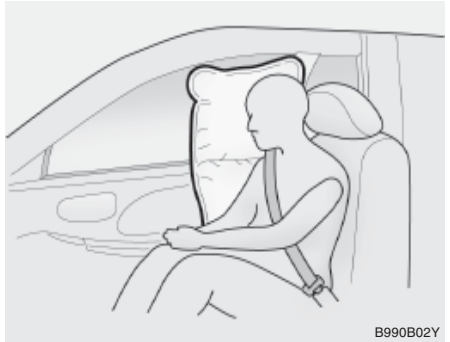

Your Hyundai is equipped with a side airbag in each front seat. The purpose of the airbag is to provide the vehicle's driver and/or the front passenger with additional protection than that offered by the seatbelt alone. The side impact airbags are designed to deploy only during certain side impact collisions, depending on the crash severity, angle, speed and point of impact. The air bags are not designed to deploy in all side impact situations.

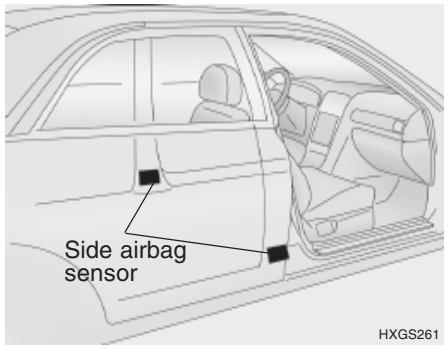

WARNING:

- **The side impact airbag is supplemental to the driver's and the passenger's three point seat belt systems and is not a substitute for them. Therefore your seat belts must be worn at all times while the vehicle is in motion. The airbags deploy only in certain side impact conditions severe enough to cause significant injury to the vehicle occupants.**

- **For best protection from the side airbag system and to avoid being injured by the deploying side impact airbag, both front seat occupants should sit in an upright position with the seat belt properly fastened. The driver's hands should be placed on the steering wheel at the 9:00 and 3:00 o'clock positions. The passenger's arms and hands should be placed in their laps.**
- **Do not use any accessory seat covers.**
- **Use of seat covers could reduce or prevent the effectiveness of the system.**
- **Do not install any accessories on the side or near the side impact airbag.**
- **Do not use excessive force on the side of the seat.**
- **Do not place any objects over the airbag or between the airbag and yourself.**

- **Do not place any objects (an umbrella, bag, etc.) between the front door and the front seat. Such objects may become dangerous projectiles and cause injury if the supplemental side impact air bag inflates.**
- **To prevent unexpected deployment of the side impact air bag that may result in personal injury, avoid impact to the side airbag sensor when the ignition key is on.**

B240C02Y-GAT

SRS Care

The SRS is virtually maintenance-free and there are no parts you can safely service by yourself. The entire SRS system must be inspected by an authorized Hyundai dealer 10 years after the date that the vehicle was manufactured.

Any work on the SRS system, such as removing, installing, repairing, or any work on the steering wheel must be performed by a qualified Hyundai technician. Improper handling of the SRS system may result in serious personal injury.

B240C02L

WARNING:

- **Extreme Hazard! Do not use a rearward facing child restraint on a seat protected by an airbag in front of it!**
- **Do not install a child restraint system in the front passenger seat position.**
  A child restraint system must never be placed in the front seat. The infant or child could be severely injured by an airbag deployment in case of an accident.

- **Modification to SRS components or wiring, including the addition of any kind of badges to the pad covers or modifications to the body structure, can adversely affect SRS performance and lead to possible injury.**
- **For cleaning the airbag pad covers, use only a soft, dry cloth or one which has been moistened with plain water. Solvents or cleaners could adversely affect the airbag covers and proper deployment of the system.**
- **No objects should be placed over or near the airbag modules on the steering wheel, instrument panel, and the front passenger's panel above the glove box, because any such object could cause harm if the vehicle is in a crash severe enough to cause the airbags to inflate.**
- **If the airbags inflate, they must be replaced by an authorized Hyundai dealer.**

- **Do not tamper with or disconnect SRS wiring, or other components of the SRS system. Doing so could result in injury, due to accidental firing of the airbags or by rendering the SRS inoperative.**
- **If components of the airbag system must be discarded, or if the vehicle must be scrapped, certain safety precautions must be observed. Your Hyundai dealer knows these precautions and can give you the necessary information. Failure to follow these precautions and procedures could increase the risk of personal injury.**
- **If you sell your vehicle, make certain that this manual is transferred to the new owner.**
- **If your car was flooded and has soaked carpeting or water on flooring, you shouldn't try to start engine; have the car towed to authorized Hyundai dealer.**

B260A03L-GAT

INSTRUMENT CLUSTER AND INDICATOR LIGHTS (Conventional type)

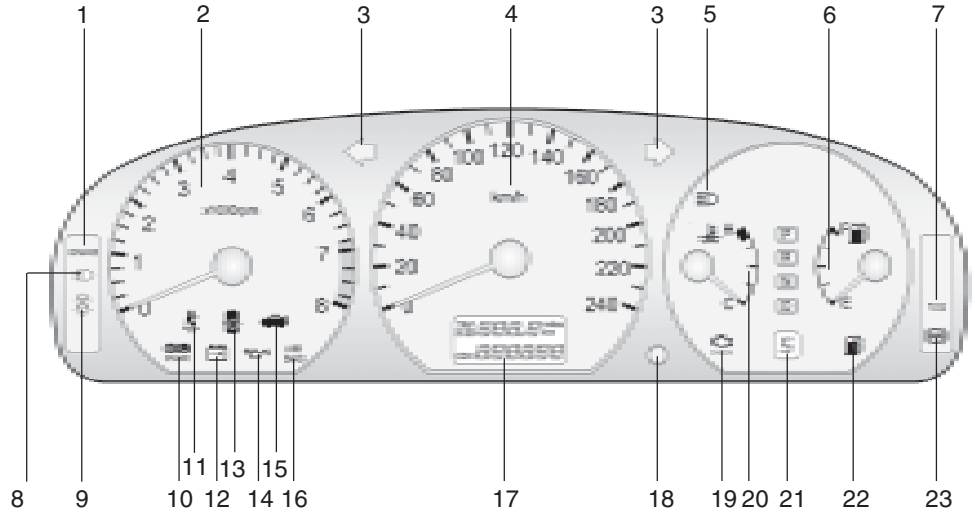

B260A03L

1. Cruise Indicator (If installed)
2. Tachometer
3. Turn Signal Indicator Light
4. Speedometer
5. High Beam Indicator Light
6. Fuel Gauge
7. Traction Control Indicator Light (If installed)
8. Front Fog Indicator Light
9. Stop/Tail Light Failure Warning Light
10. Parking Brake/Low Brake Fluid Level Warning Light
11. Seat Belt Warning Light
12. Charging System Warning Light
13. Door Ajar Warning Light
14. Low Oil Pressure Warning Light
15. Trunk Lid Open Warning Light
16. SRS (Airbag) Warning Light
17. Odometer/Trip Odometer
18. Odometer/ Trip Odometer Reset Switch
19. Malfunction Indicator Light(MIL) (If installed)
20. Coolant Temperature Gauge
21. Automatic Transaxle Position Indicator Light (If installed)
22. Low Fuel Warning Light
23. Anti-Lock Brake Warning Light

B260B01L-GAT

INSTRUMENT CLUSTER AND INDICATOR LIGHTS (Super vision type)

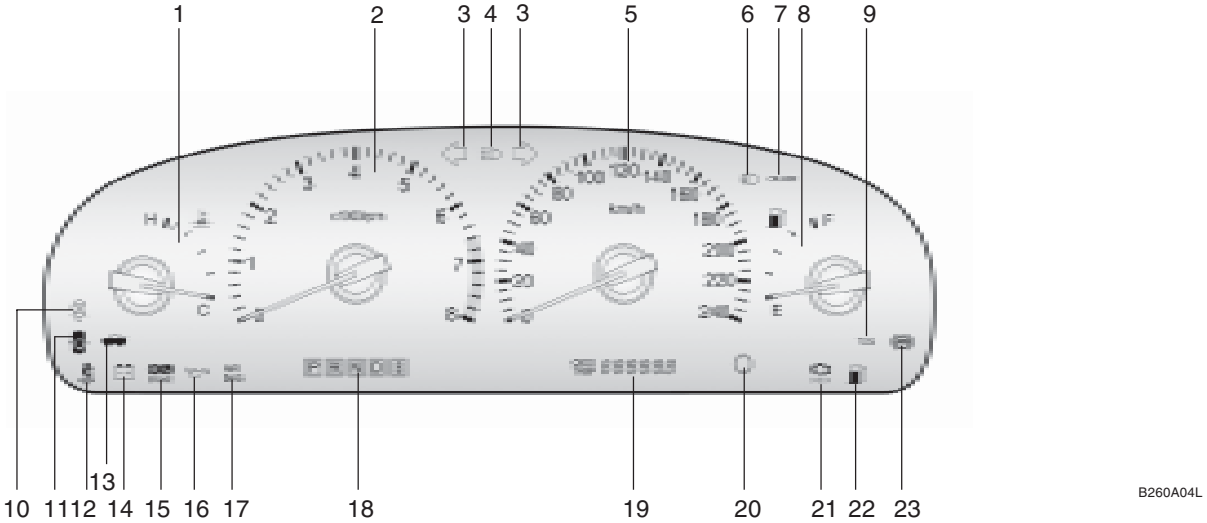

1. Coolant Temperature Gauge
2. Tachometer
3. Turn Signal Indicator Light
4. High Beam Indicator Light
5. Speedometer
6. Front Fog Indicator Light
7. Cruise Indicator (If installed)
8. Fuel Gauge
9. Traction Control Indicator Light (If installed)
10. Stop/Tail Light Failure Warning Light
11. Door Ajar Warning Light
12. Seat Belt Warning Light
13. Trunk Lid Open Warning Light
14. Charging System Warning Light
15. Parking Brake/Low Brake Fluid Level Warning Light
16. Low Oil Pressure Warning Light
17. SRS (Airbag) Warning Light
18. Automatic Transaxle Position Indicator Light (If installed)
19. Odometer/ Trip Odometer
20. Odometer/ Trip Odometer Reset Switch
21. Malfunction Indicator Light(MIL) (If installed)
22. Low Fuel Warning Light
23. Anti-Lock Brake Warning Light

B260D01A-AAT

TURN SIGNAL INDICATOR LIGHTS

The blinking green arrows on the instrument panel show the direction indicated by the turn signals. If the arrow comes on but does not illuminate, blinks more rapidly than normal, or does not illuminate at all, a malfunction in the turn signal system is indicated. Your dealer should be consulted for repairs.

B260P01L-GAT

ABS SERVICE REMINDER INDICATOR

When the key is turned to the "ON" position, the Anti-Lock Brake System SRI will come on and then go off in a few seconds. If the ABS SRI remains on, comes on while driving, or does not come on when the key is turned to the "ON" position, this indicates that there may be a problem with the ABS.

If this occurs, have your vehicle checked by your Hyundai dealer as soon as possible. The normal braking system will still be operational, but without the assistance of the anti-lock brake system.

WARNING:

If the both ABS SRI and Parking Brake/Brake fluid level warning lights remain "ON" or come on while driving, there may be a problem with E.B.D (Electronic Brake Force Distribution).

If this occurs, avoid sudden stops and have your vehicle checked by your Hyundai dealer as soon as possible.

B260C02L-GAT

TRACTION CONTROL INDICATOR LIGHT (If installed)

The traction control indicators change operations according to the switch conditions and whether the system is in operation or not. They will also illuminate when the ignition key is turned to the "ON" or "START" position, but should go out after three seconds. If the TCS indicator stays on, take your car to your authorized Hyundai dealer and have the system checked. See section 2 for more information about the TCS system.

B260E01L-GAT

SEAT BELT WARNING LIGHT

The seat belt warning light blinks for about 6 seconds when the ignition key is turned from the "OFF" position to "ON" or "START".

B260F01A-AAT

HIGH BEAM INDICATOR LIGHT

The high beam indicator light comes on whenever the headlights are switched to the high beam or flash position.

B260K01S-AAT

TRUNK LID OPEN WARNING LIGHT

This light remains on unless the trunk lid is completely closed.

B260A01B-GAT

FRONT FOG INDICATOR LIGHT

Front fog indicator light comes on whenever the fog light switch is on.

B260G01A-AAT

LOW OIL PRESSURE WARNING LIGHT

CAUTION:

If the oil pressure warning light stays on while the engine is running, serious engine damage may result. The oil pressure warning light comes on whenever there is insufficient oil pressure. In normal operation, it should come on when the ignition switch is turned on, then go out when the engine is started. If the oil pressure warning light stays on while the engine is running, there is a serious malfunction.

If this happens, stop the car as soon as it is safe to do so, turn off the engine and check the oil level. If the oil level is low, fill the engine oil to the proper level and start the engine again. If the light stays on with the engine running, turn the engine off immediately. In any instance where the oil light stays on when the engine is running, the engine should be checked by an authorized Hyundai dealer before the car is driven again.

B260H01L-AAT

PARKING BRAKE/ LOW BRAKE FLUID LEVEL WARNING LIGHT

WARNING:

If you suspect brake trouble, have your brakes checked by a Hyundai dealer as soon as possible. Driving your car with a problem in either the brake electrical system or brake hydraulic system is dangerous, and could result in a serious injury or death.

Warning Light Operation

The parking brake/brake fluid level warning light should come on when the parking brake is applied and the ignition switch is turned to "ON" or "START". After the engine is started, the light should go out when the parking brake is released.

If the parking brake is not applied, the warning light should come on for about 3 seconds when the ignition switch is turned to "ON", and then go out. If the light comes on at any other time, you should slow the vehicle and bring it to a complete stop in a safe location off the roadway.

The brake fluid level warning light indicates that the brake fluid level in the brake master cylinder is low and hydraulic brake fluid conforming to DOT 3 or DOT 4 specifications should be added. After adding fluid, if no other trouble is found, the car should be immediately and carefully driven to a Hyundai dealer for inspection. If further trouble is experienced, the vehicle should not be driven at all but taken to a dealer by a professional towing service or some other safe method.

Your Hyundai is equipped with dual-diagonal braking systems. This means you still have braking on two wheels even if one of the dual systems should fail. With only one of the dual systems working, more than normal pedal travel and greater pedal pressure are required to stop the car. Also, the car will not stop in as short a distance with only half of the brake system working. If the brakes fail while you are driving, shift to a lower gear for additional engine braking and stop the car as soon as it is safe to do so.

B260J01A-GAT

CHARGING SYSTEM WARNING LIGHT

The charging system warning light should come on when the ignition is turned on, then go out when the engine is running. If the light stays on while the engine is running, there is a malfunction in the electrical charging system. If the light comes on while you are driving, stop, turn off the engine and check under the hood. First, make certain the generator drive belt is in place. If it is, check the tension of the belt.

B260L01Y-AAT

DOOR AJAR WARNING LIGHT AND CHIME (If installed)

The door ajar warning light warns you that a door is not completely closed and the chime warns you that driver's side front door is not completely closed.

NOTE:

To remind you not to lock the key inside the car, the warning light comes on whenever the key is in the "LOCK" position and a door is open. The warning chime only sounds whenever the key is in the "LOCK" position and the driver's side front door is open. The chime sounds and the light remains on until the key is removed from the ignition.

B260M01A-AAT

LOW FUEL LEVEL WARNING LIGHT

The low fuel level warning light comes on when the fuel tank is approaching empty. When it comes on, you should add fuel as soon as possible. Driving with the fuel level warning light on or with the fuel level below "E" can cause the engine to misfire and damage the catalytic converter.

B260B01L-AAT

SRS (Airbag) SERVICE REMINDER INDICATOR (SRI)

The SRS service reminder indicator (SRI) comes on and flashes for about 6 seconds after the ignition key is turned to the "ON" position or after the engine is started, after which it will go out.

This light also comes on when the SRS is not working properly. If the SRI does not come on, or continuously remains on after flashing for about 6 seconds, or goes out for a second after illuminating for about 6 seconds and then,

continuously comes on again, when you turned the ignition key to the "ON" position or started the engine, or if it comes on while driving, have the SRS inspected by an authorized Hyundai Dealer.

B260Q01HP-DAT

CRUISE INDICATOR (If installed)

The cruise indicator light in the instrument cluster is illuminated only when the vehicle cruising speed has been set using the control switch on the steering wheel.
The indicator light does not illuminate when the main cruise control switch is activated.
Information on the use of cruise control may be found on page 1-72.

B270B01L-AAT

STOP/TAIL LIGHT FAIL URE WARNING LIGHT

If the Stop/Tail Light Failure warning light comes on when the parking brake is applied or the tail light is turned on, check the brake lines or the tail light bulb.

B260N02FC-GAT

MALFUNCTION INDICATOR LIGHT (If installed)

This light illuminates when there is a malfunction of an exhaust gas related component, and the system is not functioning properly so that the exhaust gas regulation values are not satisfied. This light will also illuminate when the ignition key is turned to the "ON" position, and will go out in a few seconds. If it illuminates while driving, or does not illuminate when the ignition key is turned to the "ON" position, take your car to your nearest authorized Hyundai dealer and have the system checked.

B270A01A-AAT

BRAKE PAD WEAR WARNING SOUND

The front disc brake pads have wear indicators that should make a high-pitched squealing or scraping noise when new pads are needed. The sound may come and go or be heard all the time when the vehicle is moving. It may also be heard when the brake pedal is pushed down firmly. Excessive rotor damage will result if the worn pads are not replaced. See your Hyundai dealer immediately.

B280A01A-AAT

FUEL GAUGE

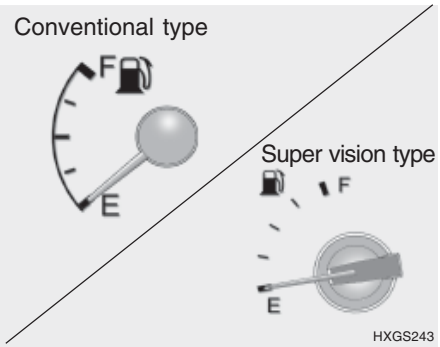

The needle on the gauge indicates the approximate fuel level in the fuel tank. The fuel capacity is given in Section 9.

B290A02A-AAT

ENGINE COOLANT TEMPERATURE GAUGE

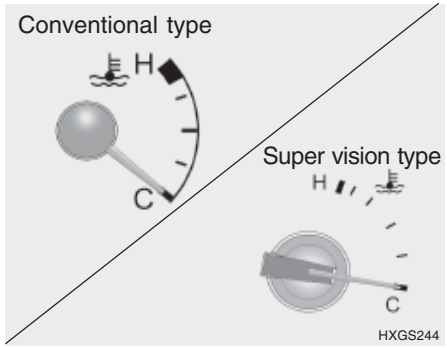

WARNING:

Never remove the radiator cap when the engine is hot. The engine coolant is under pressure and could erupt and cause severe burns. Wait until the engine is cool before removing the radiator cap.

The needle on the engine coolant temperature gauge should stay in the normal range. If it moves across the dial to "H" (Hot), pull over and stop as soon as possible and turn off the engine. Then open the hood and, after the engine has cooled, check the coolant level and the water pump drive belt. If you suspect cooling system trouble, have your cooling system checked by Hyundai dealer as soon as possible.

B300A01Y-GAT

SPEEDOMETER

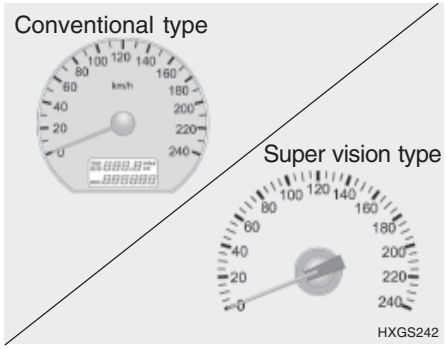

Your Hyundai's speedometer is calibrated in kilometers per hour or miles per hour.

B330A01Y-AAT

TACHOMETER

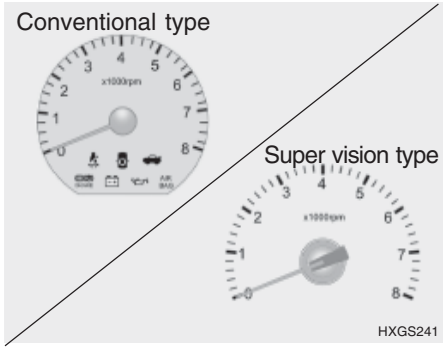

The tachometer registers the speed of your engine in revolutions per minute (rpm). It is useful to help you shift at the appropriate engine speed to avoid lugging or over-revving the engine.

CAUTION:
The engine should not be raced to such a speed that the needle enters the red zone on the tachometer face. This can cause severe engine damage and may void your warranty.

B310B01GK-GAT

ODOMETER/TRIP ODOMETER

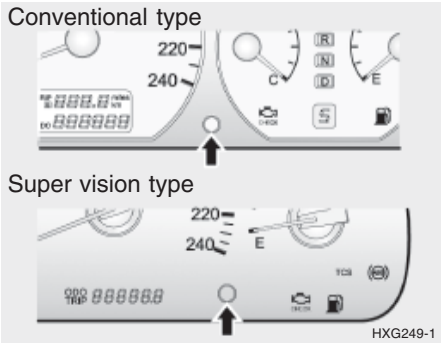

Function of digital odometer/trip odometer

Pushing in the reset switch on the right side of speedometer when the ignition switch is turned "ON" will display the following sequence:

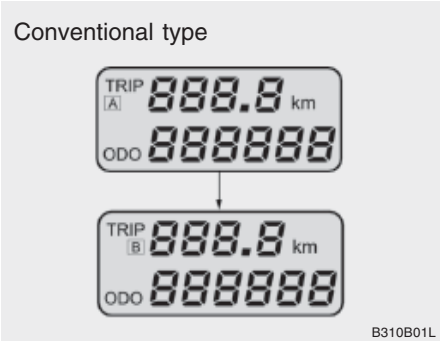

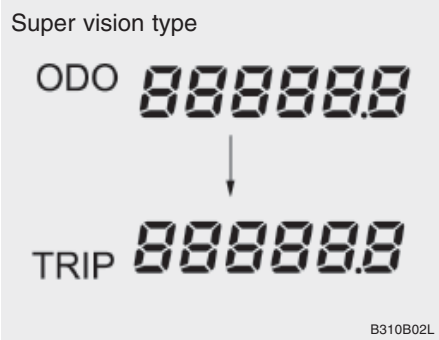

1. Odometer

The odometer records the total driving distance in kilometers or miles, and is useful for keeping a record for maintenance intervals.

NOTE:
Any alteration of the odometer may void your warranty coverage.

2 Trip odometer

Records the distance of 2 trips in kilometers or miles.

TRIP A: First distance you have traveled from your origination point to a first destination.

TRIP B: Second distance from the first destination to the final destination.

To shift from TRIP A to TRIP B, press the reset switch. When pressed for 1 second, it will reset to 0.

B360B01Y-GAT

FRONT FOG LIGHT SWITCH

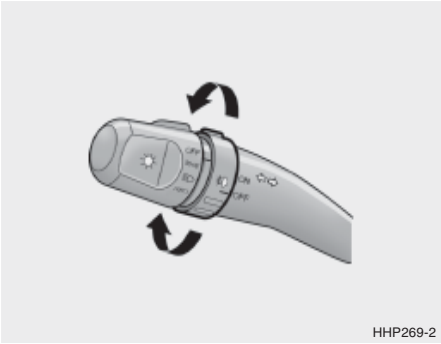

To turn on the front fog lights, place the switch in the "ON" position. They will light when the headlight switch is in the first or second position.

B360A01Y-GAT

REAR FOG LIGHT SWITCH (If installed)

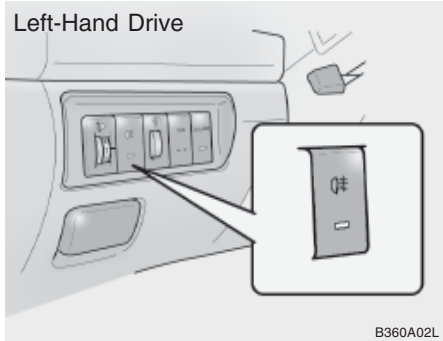

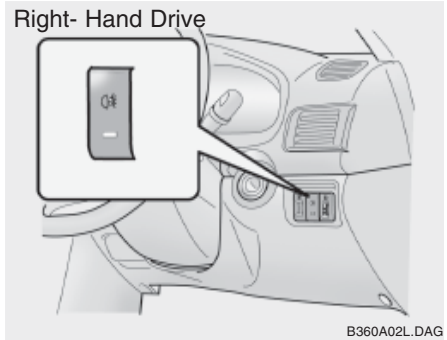

To turn on the rear fog lights, push the switch. They will come on when the headlight switch is in the second position and the key is in the "ON" position.

B340A01A-AAT

COMBINATION TURN SIGNAL, HEADLIGHT AND HIGH-BEAM SWITCH

Turn Signal Operation

Pulling down on the lever causes the turn signals on the left side of the car to blink. Pushing upwards on the lever causes the turn signals on the right side of the car to blink. As the turn is completed, the lever will automatically return to the center position and turn off the turn signals at the same time. If either turn signal indicator light blinks more rapidly than usual, goes on but does not blink, or does not go on at all, there is a malfunction in the system. Check for a burned-out fuse or bulb or see your Hyundai dealer.

B340B01A-AAT

Lane Change Signal

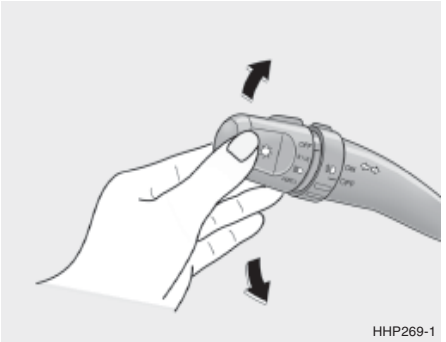

To indicate a lane change, move the lever up or down to a point where it begins flashing.
The lever will automatically return to the center position when released.

B340C02E-AAT

Headlight Switch

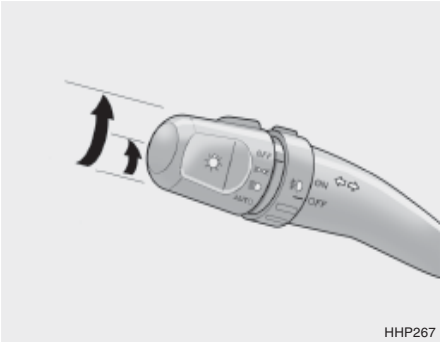

To operate the headlights, turn the barrel on the end of the multi-function switch. The first position turns on the parking lights, sidelights, tail lights and instrument panel lights. The second position turns on the headlights.

NOTE:
The ignition must be in the "ON" position to turn on the headlights.

Parking light auto cut

If you do not turn the parking lights "OFF" after driving, the parking lights will automatically shut "OFF" when the driver's door is opened.

To turn them "ON" again you must simply turn the ignition key to the "ON" position.

B340F01L-GAT

Auto Light

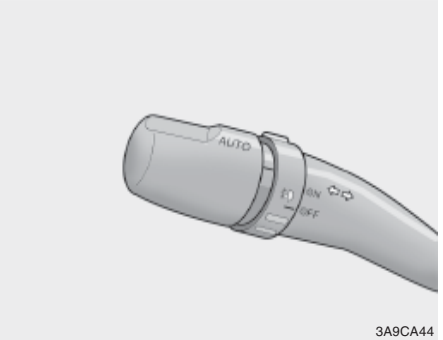

3A9CA44

To operate the auto light, turn the barrel on the end of the multi-function switch. If you set the multi-function switch to "AUTO", the tail lights and headlights will be turned automatically on or off according to external illumination.

B340F01A-GAT

Daytime Running Lights (If Installed)

Your Hyundai is equipped with daytime running lights. The daytime running lights are used to improve visibility for oncoming traffic. Your vehicle daytime running lights are designed to remain on continuously when the engine is operating even though the headlight switch is in the "OFF" position. However, the daytime running lights will be off while the parking brake is applied.

B340D01A-AAT

High-beam Switch

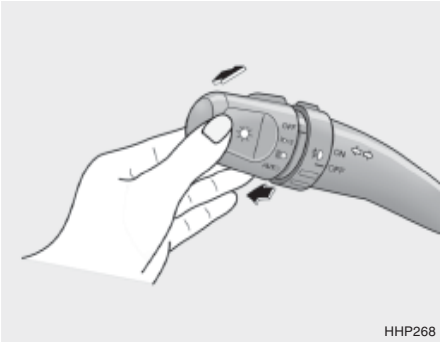
HHP268

To turn on the headlight high beams, push the lever forward (away from you). The High Beam Indicator Light will come on at the same time. For low beams, pull the lever back toward you.

B340E01A-AAT

Headlight Flasher

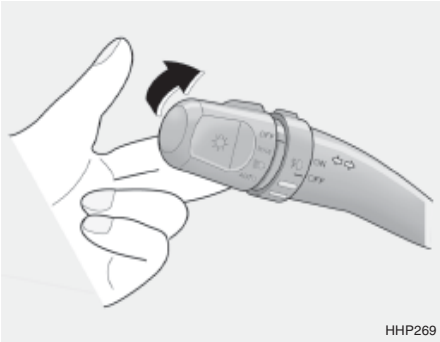

To flash the headlights, pull the switch lever toward you, then release it. The headlights can be flashed even though the headlight switch is in the "OFF" position.

B350A01A-AAT

WINDSHIELD WIPER AND WASHER SWITCH

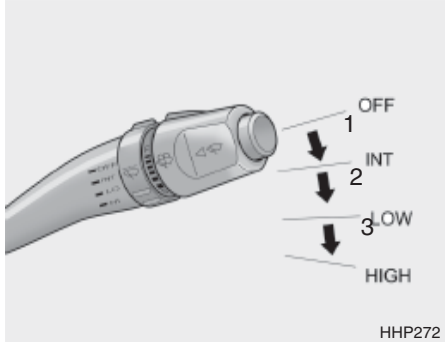

The windshield wiper switch has three positions:

1. Intermittent wiper operation
2. Low-speed operation
3. High-speed operation

NOTE:

To prevent damage to the wiper system, do not attempt to wipe away heavy accumulations of snow or ice. Accumulated snow and ice should be removed manually. If there is only a light layer of snow or ice, operate the heater in the defrost mode to melt the snow or ice before using the wiper.

B350B01Y-GAT

Windshield Washer Operation

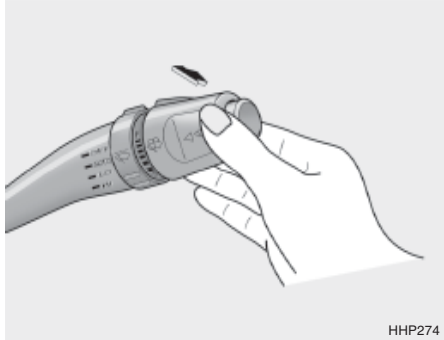

To use the windshield washer, pull the wiper/washer lever toward the steering wheel. When the washer lever is operated, the wipers automatically make two passes across the windshield. The washer continues to operate until the lever is released.

NOTE:

- **Do not operate the washer more than 15 seconds at a time or when the fluid reservoir is empty.**
- **In icy or freezing weather, be sure the wiper blades are not frozen to the glass prior to operating the wipers.**
- **In areas where water freezes in winter, use windshield washer antifreeze.**

Mist Wiper Operation

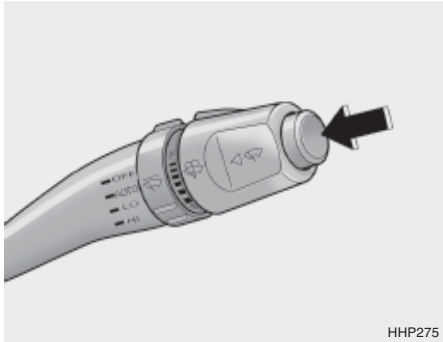

HHP275

If a single wipe is desired in mist, push the MIST operation switch at the end of the windshield wiper and washer control lever.

B350C01L-AAT

Adjustable Intermittent Wiper Operation

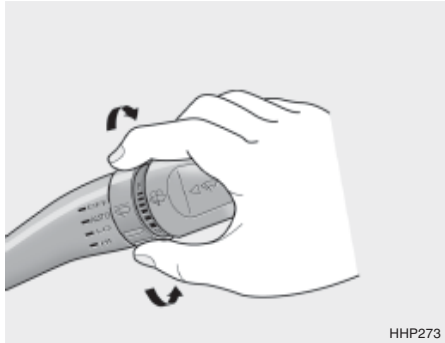
HHP273

To use the intermittent wiper feature, place the wiper switch in the "INT" position. With the switch in this position, the interval between wipes can be varied from approximately 1 to 18 seconds by turning the interval adjuster barrel. This is also varied automatically depending on your road speed.

B350B01B-GAT

Auto Wiper Operation (If installed)

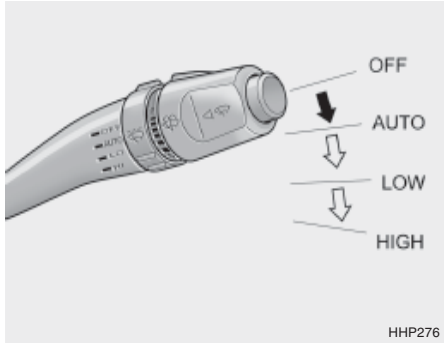

HHP276

When the windshield wiper switch is placed in the "AUTO" position, the rain sensor located on the upper end of windshield glass senses the amount of rainfall and controls for the appropriate length of the intervals between wipes appropriately.

NOTE:

If there is heavy accumulation of snow or ice on the windshield glass, there will be a 10 minute waiting period prior to the operation of the windshield wipers.

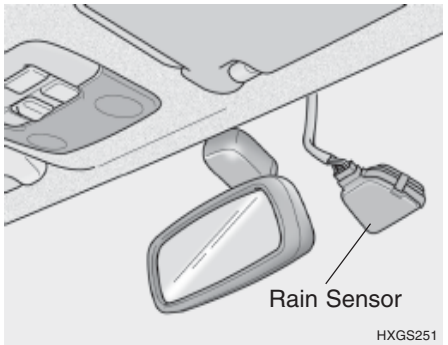

WARNING:

When the ignition switch is on and the windshield wiper switch is placed in the "AUTO" mode, please use caution in the following cases to avoid any hand injury:

- **Do not touch the upper end of the windshield glass facing the rain sensor.**
- **Do not wipe the upper end of the windshield glass with a cloth.**
- **Do not put pressure on the windshield glass.**

B370A01A-AAT

HAZARD WARNING SYSTEM

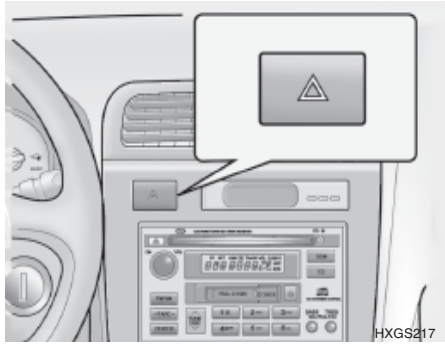

The hazard warning system should be used whenever you find it necessary to stop the car in a hazardous location. When you must make such an emergency stop, always pull off the road as far as possible.

The hazard warning lights are turned on by pushing in the hazard switch. This causes all turn signal lights to blink. The hazard warning lights will operate even though the key is not in the ignition.

To turn the hazard warning lights off, push the switch a second time.

B380A01HP-GAT

REAR WINDOW DEFROSTER SWITCH (If Installed)

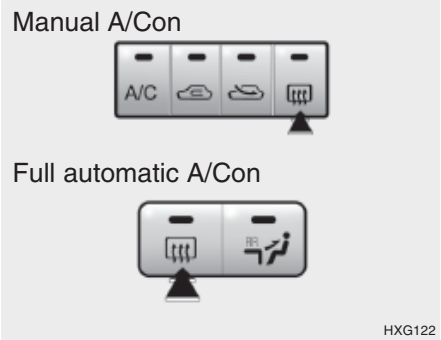

The rear window defroster is turned on by pushing in the switch. At the same time, the rear window defroster indicator light on the switch is turned on. To turn the defroster off, push the switch a second time. The rear window defroster automatically turns itself off after about 20 minutes. To restart the defroster cycle, push in the switch again after it has turned itself off.

CAUTION:
Do not clean the inner side of the rear window glass with an abrasive type of glass cleaner or use a scraper to remove the foreign deposits from the inner surface of the glass as this may cause damage to the defroster elements.

NOTE:
The ignition must be in the "ON" position for the rear window defroster to operate.

B400A01A-AAT

DIGITAL CLOCK

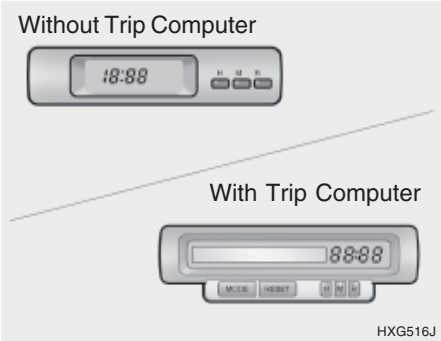

There are three control buttons for the digital clock. Their functions are:

HOUR -Push "H" to advance the hour indicated.
MIN - Push "M" to advance the minute indicated.
RESET - Push "R" to reset minutes to ":00" to facilitate resetting the clock to the correct time. When this is done:

Pressing "R" between 10 : 30 and 11 : 29 changes the readout to 11 : 00.
Pressing "R" between 11 : 30 and 12 : 29 changes the readout to 12 : 00.

B400B03L-GAT

TRIP COMPUTER (If installed)

Trip computer is a microcomputer-controlled driver information gauge that displays information related to driving, such as a distance to empty, average speed and driving time on the LCD.

MODE

Pushing "MODE" to select distance to empty, average speed and driving time for the driving information. Each push of the button changes the display as follows;

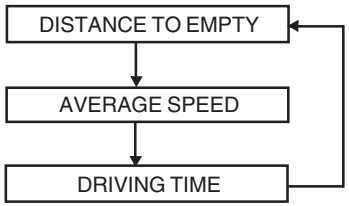

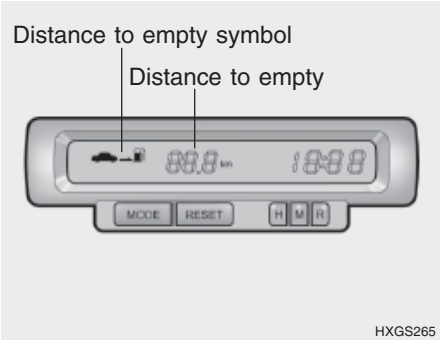

o **DISTANCE TO EMPTY** - This mode indicates the estimated distance to empty from the current fuel in the fuel tank. When the remaining distance is below 50km(30miles), "--.-" symbol will be displayed with blinking.

CAUTION:
If the battery has been taken away and reinstalled or if the vehicle posture is not upright, the function of DISTANCE TO EMPTY may be operated incorrectly.

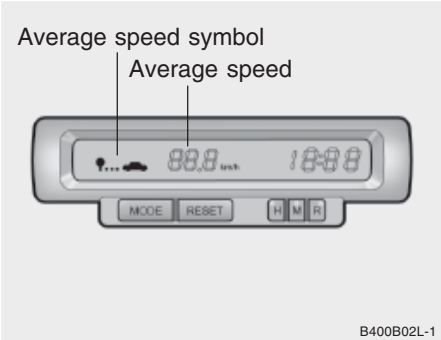

o **AVERAGE SPEED** - This mode indicates the average speed from the starting of the vehicle to the ignition key "OFF". When the ignition key is "OFF", it will initialize to 0km/h(0mph).

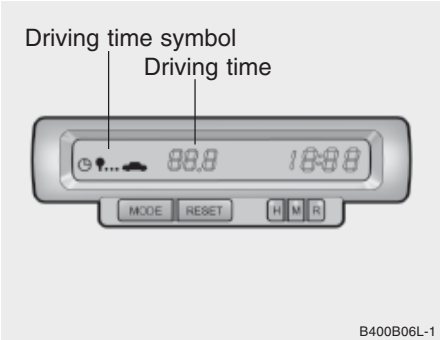

o **DRIVING TIME** - This mode indicates the total time from the starting of the vehicle to the ignition key "OFF" after resetting. When the "RESET" switch is pushed, it will initialize to 0:00.

RESET

Pushing "RESET" during more than 1 sec to initialize the displayed information such as average speed and driving time.

NOTE:

- **When refueling a vehicle that is not parked on level ground or taking away the battery, the Trip Computer can recognize the wrong amount of fuel.**
- **The trip Computer can recognize the amount of fuel more than actual amount if there is leakage of fuel, because it can recognize only the normal consumption of fuel.**
- **When refueling with more than 7 liters at least, the Trip Computer will recognize refueling.**

B410A01A-AAT

INSTRUMENT PANEL LIGHT CONTROL (RHEOSTAT)

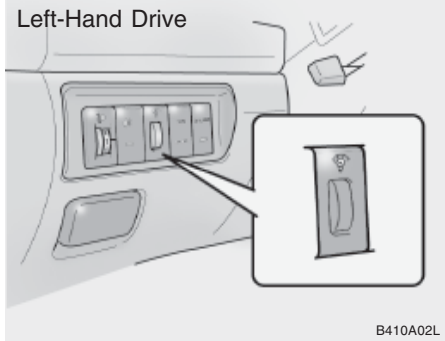

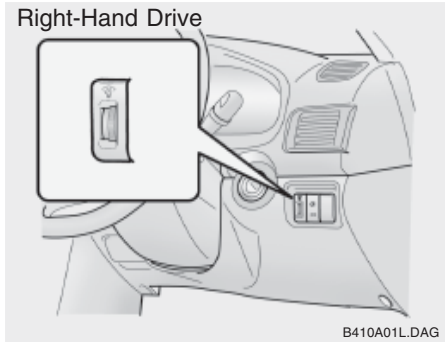

The instrument panel lights can be made brighter or dimmer by turning the instrument panel light control knob.

B420A02A-AAT

CIGARETTE LIGHTER

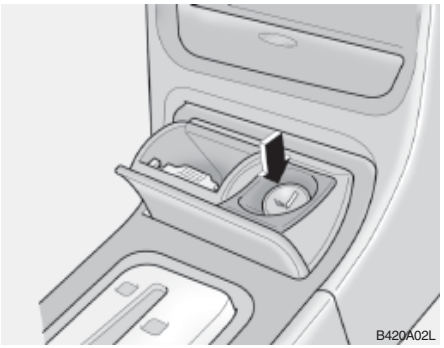

For the cigarette lighter to work, the key must be in the "ACC" position or the "ON" position.

To use the cigarette lighter, push it all the way into its socket. When the element has heated, the lighter will pop out to the "ready" position.

Do not hold the cigarette lighter pressed in. This can damage the heating element and create a fire hazard.

If it is necessary to replace the cigarette lighter, use only a genuine Hyundai replacement or its approved equivalent.

CAUTION:
Do not use electric accessories or equipment other than the Hyundai genuine parts in the socket.

B430A01Y-AAT
FRONT ASHTRAY

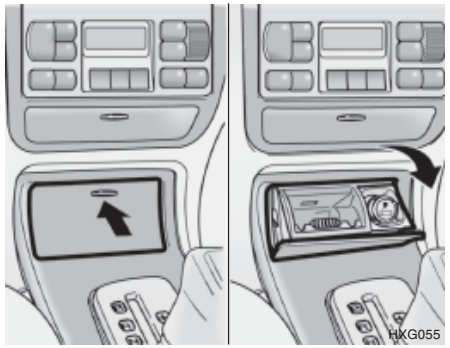

The front ashtray may be opened by pushing and releasing the ashtray/cigarette lighter door at its top edge.
To remove the ashtray in order to clean it, the metal ash receptacle should be removed from the ashtray door. Do not attempt to remove the entire ashtray door assembly or damage will result. Instead, push the metal ash receptacle down and forward in the ashtray door, and it can then be lifted out. To reinstall it, place it in the proper position and press it down and forward to reengage the ash receptacle rear lip in the ashtray door. The ashtray light will only illuminate when the exterior body lights are switched on.

B440A01L-GAT
REAR ASHTRAY

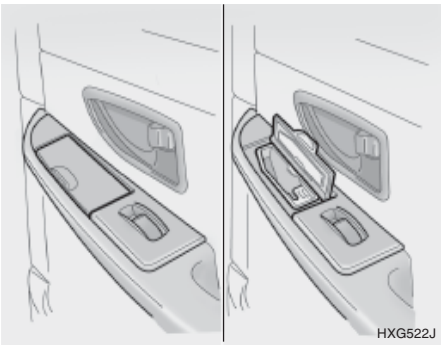

The rear ashtray may be opened by pulling it up by its top edge. To remove the ashtray to empty or clean it, lift it up slightly and pull it all the way out.

B450A01L-GAT
DRINK HOLDER

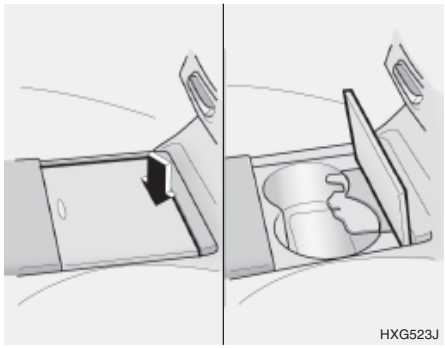

The drink holder is located on the main console for holding cups or cans. The drink holder can be opened by pushing at its top edge.

CAUTION:
Place the drink holder in its closed position when not in use.

WARNING:
Do not place anything except drinks on the drink holder. Such objects can be thrown out, possibly injuring persons in the vehicle during sudden braking or in the event of an accident.

B450B01L-GAT

REAR DRINK HOLDER

The drink holder is located on front of the rear seat arm rest for holding cups or cans. The drink holder can be used by pushing it in first and then releasing it.

CAUTION:
Place the drink holder in its closed position when not in use.

WARNING:
Do not place anything except drinks on the drink holder. Such objects can be thrown out, possibly injuring persons in the vehicle during sudden braking or in the event of an accident.

B460A01Y-AAT

SUNROOF (If installed)
Sun Shade

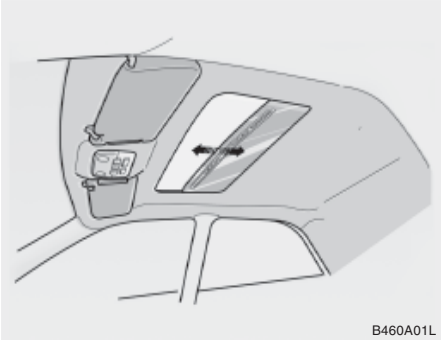

Your HYUNDAI is equipped with a sliding sunshade which you can manually adjust to let in light with the sunroof closed, or to block sunlight.

WARNING:
Never adjust the sunshade while driving.

B460B01Y-AAT

Opening the Sunroof System

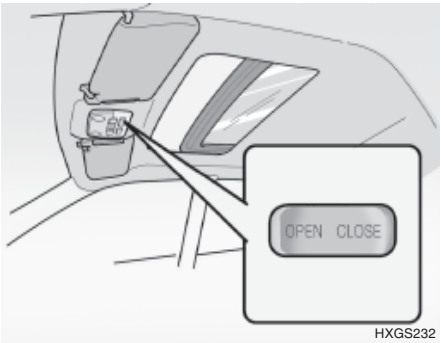

The sunroof can be electrically opened or closed with the ignition key in the "ON" position. To open or to close, press and hold the button located in the front of the roof panel. Release the button when the sunroof reaches the desired position.

WARNING:

- **Do not close a sunroof if anyone's hands, arms or body are between the sliding glass and the sunroof sash, as this could result in injury.**
- **Do not place your head or arms out of the sunroof opened at any time.**

CAUTION:

- **Do not open the sunroof in severely cold temperature or when it is covered with ice or snow.**
- **Periodically remove any dirt that may have accumulated on the guide rails.**

B460C01Y-AAT

Tilting the Sunroof System

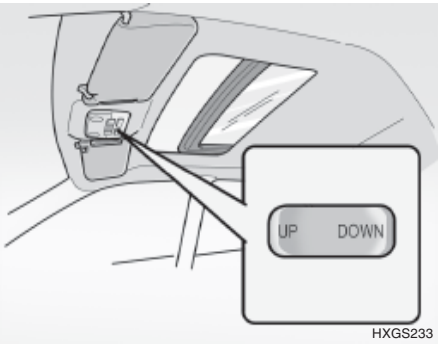

HXGS233

The sunroof can be tilted and closed with the ignition key in the "ON" position. Release the button when the sunroof reaches the desired position.

NOTE:

After washing the car or after there is rain, be sure to wipe off any water that is on the sunroof before operating it.

B460D02Y-AAT

Manual Operation of Sunroof

HXGS234

If the sunroof does not electrically operate:

1. Remove the rectangular plastic interior light lens in the front of the roof panel.

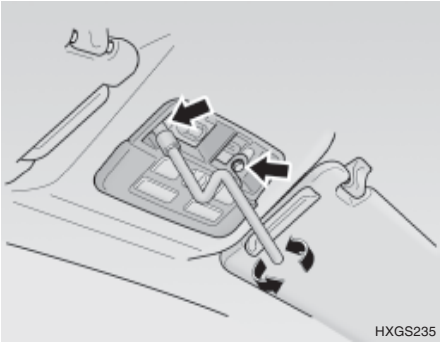
HXGS235

2. Remove the front overhead light and switch panel, using a phillips screwdriver.

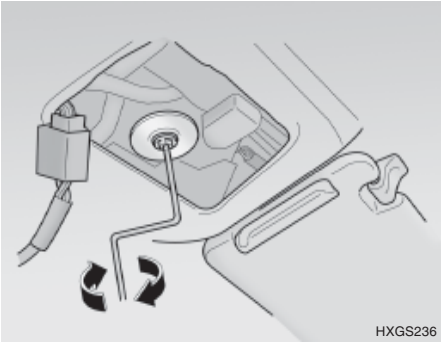
HXGS236

3. Insert the hexagonal head wrench provided with the vehicle into the socket. This wrench can be found in the vehicle's trunk or glove box.
4. Turn the wrench clockwise to open or counterclockwise to close the sunroof.

B480A01L-GAT

FRONT MAP LIGHT (With sunroof)

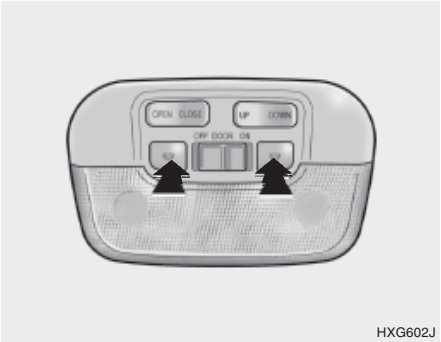

HXG602J

The two map light switches are located on both sides of the interior light. Push in the map light switch to turn the light on or off.

B480B01Y-AAT

FRONT MAP LIGHT (Without Sunroof)

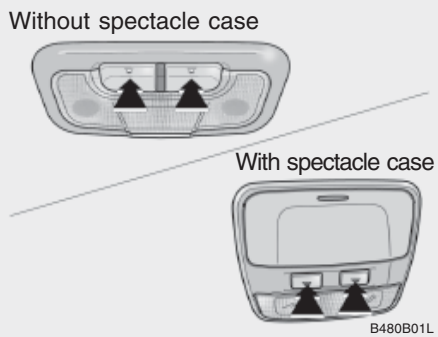

Push in the map light switch to turn the light on or off. This light produces a spot beam for convenient use as a map light at night or as a personal light for the driver and the passenger.

B490A01L-AAT

INTERIOR LIGHT
Front overhead console light

The interior courtesy light has three buttons. The three buttons are:

o DOOR
In the "DOOR" position, the interior courtesy light comes on when any door is opened regardless of the ignition key position. The light goes out gradually 6 seconds after the door is closed.

o ON
In the "ON" position, the light stays on at all times.

o OFF
In the "OFF" position, the light stays off at all times even though a door is open.

B490C01L-AAT

Rear room light

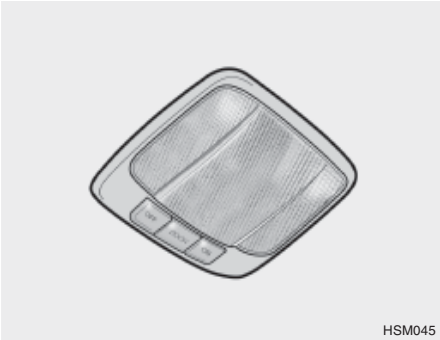

The interior courtesy light has three buttons. The three buttons are:

o DOOR
In the "DOOR" position, the interior courtesy light comes on when any door is opened regardless of the ignition key position. The light goes out gradually 6 seconds after the door is closed.

o ON
In the "ON" position, the light stays on at all times.

o OFF
In the "OFF" position, the light stays off at all times even though a door is open.

B490B01L-GAT
Personal Light

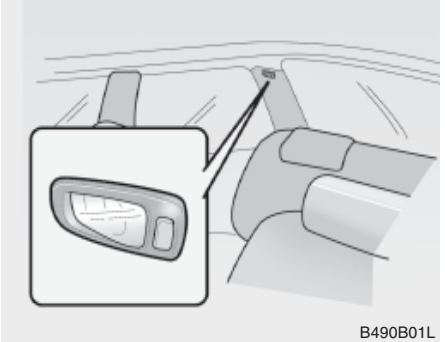

The personal light are located on the both of the rear pillar. Push the personal light switch to turn the light on or off.

B491A02F-GAT
SPECTACLE CASE (If Installed)

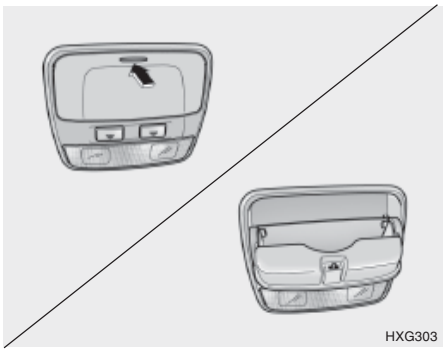

The spectacle case is located on the front overhead console.
Push the end of the cover to open the spectacle case.

WARNING:
Do not open the spectacle case while the vehicle is moving. The rear view mirror of the vehicle can be blocked by an open spectacle case.

B500A01Y-AAT
GLOVE BOX

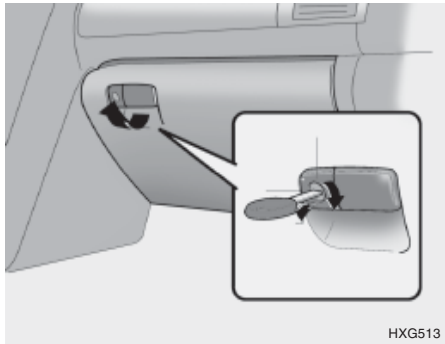

WARNING:
To avoid the possibility of injury in case of an accident or a sudden stop, the glove box door should be kept closed when the car is in motion.

- o To open the glove box, pull on the glove box release lever.
- o The glove box door can be locked with the key.

B510B01L-GAT

OUTSIDE REARVIEW MIRROR Electric Type (If installed)

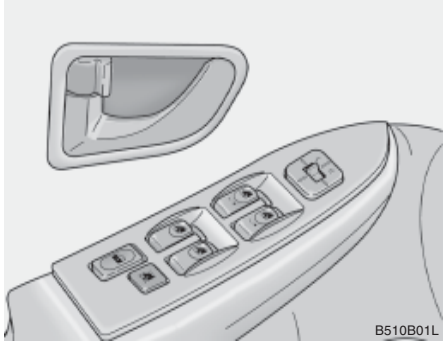

The outside rearview mirrors can be adjusted in any direction to give the maximum rearview vision.
The remote control outside rearview mirror switch controls the adjustments for both right and left outside mirrors.

To adjust the position of either mirror:

1. Move the selecting switch to the right or left to activate the adjustable mechanism for the corresponding door mirror.
2. Now, adjust mirror angle by depressing the appropriate perimeter switch as illustrated.

CAUTION:

- **Do not operate the switch continuously for an unnecessary length of time.**
- **Scraping ice from the mirror face could cause permanent damage. To remove any ice, use a sponge, soft cloth or approved deicer.**

WARNING:

Be careful when judging the size or distance of any object seen in the passenger side rear view mirror. It is a convex mirror with a curved surface. Any objects seen in this mirror are closer than they appear.

B510D01HP-AAT

OUTSIDE REARVIEW MIRROR HEATER (If installed)

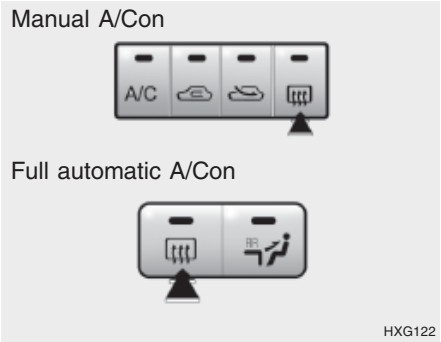

The outside rearview mirror heater is actuated in connection with the rear window defroster. To heat the outside rearview mirror glass, push in the switch for the rear window defroster. The rearview mirror glass will be heated for defrosting or defogging and will give you improved rear vision in inclimate weather conditions. Push the switch again to turn the heater off. The outside rearview mirror heater automatically turns itself off after 20 minutes.

B510C01A-AAT

FOLDING THE OUTSIDE REAR VIEW MIRRORS

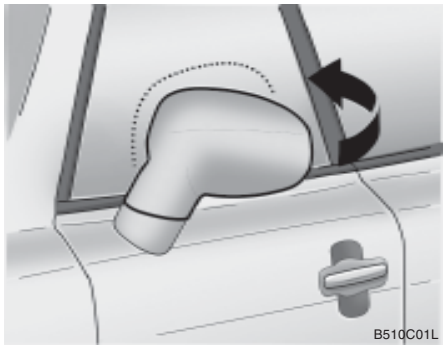

To fold the outside rear view mirrors, push them toward the rear.
The outside rear view mirrors can be folded rearward for parking in narrow areas.

WARNING:
Do not adjust or fold the outside rear view mirrors while the vehicle is moving. This could result in loss of control, and an accident which could cause death, serious injury or property damage.

B520A01A-AAT

DAY/NIGHT INSIDE REARVIEW MIRROR

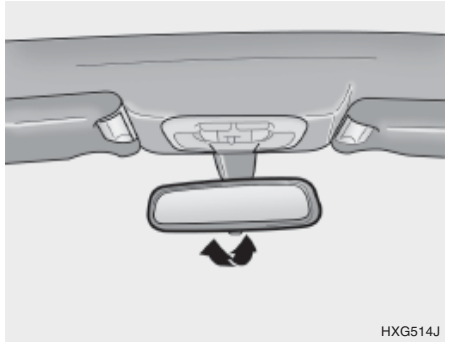

Your Hyundai is equipped with a day/night inside rearview mirror. The "night" position is selected by flipping the tab at the bottom of the mirror toward you. In the "night" position, the glare of headlights of cars behind you is reduced.

B520B01O-GAT

DAY/NIGHT INSIDE REARVIEW MIRROR (Electric type) (If installed)

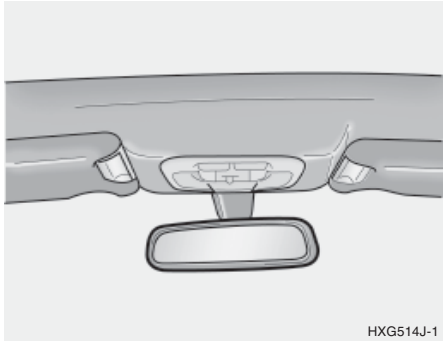

The electric type day/night inside rearview mirror controls automatically the glare of headlights of the car behind you. Adjust the rearview mirror to the desired position.

B530A01A-AAT

PARKING BRAKE

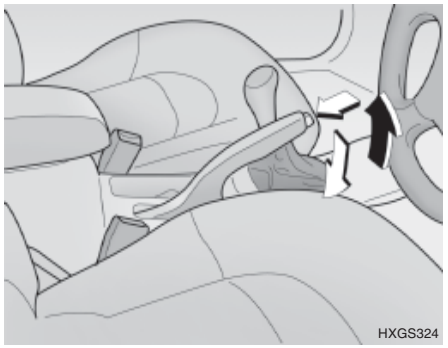

Always engage the parking brake before leaving the car. This also turns on the parking brake indicator light when the key is in the "ON" or "START" position. Before driving away, be sure that the parking brake is fully released and the indicator light is off.

- o To engage the parking brake, pull the lever up as far as possible.
- o To release the parking brake, pull up the lever and press the thumb button. Then, while holding the button in, lower the brake lever.

B530B01L-GAT

PARKING BRAKE (Foot type)

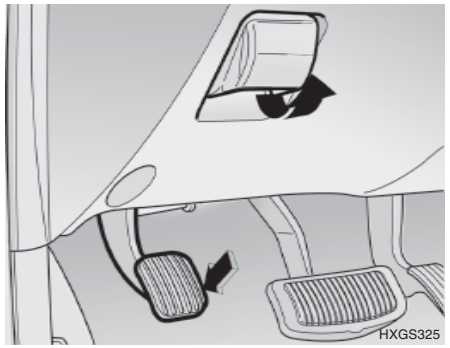

- o To engage the foot type parking brake, depress the parking brake pedal beneath the left side of the lower crash pad.
- o To release the parking brake, pull up the parking brake release lever at the left side of the crash pad.

B540A01S-GAT

TRUNK LID

Remote Trunk Lid Release

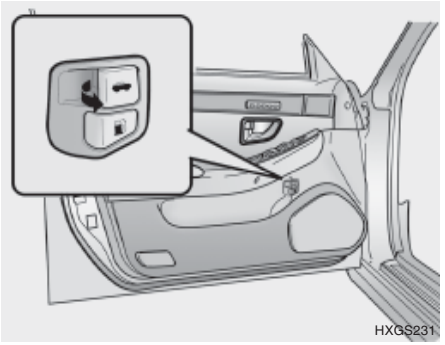

To open the trunk lid without using the key, pull up the lid release lever.
To close, lower the trunk lid, then press down on it until it locks. To be sure the trunk lid is securely fastened, always check by trying to pull it up again.

WARNING:
The trunk lid should always be kept completely closed while the vehicle is in motion. If it is left open or ajar, exhaust gases may enter the car and serious illness or death may result. See additional warnings concerning exhaust gases on page 2-2.

B540B04Y-AAT
Trunk Lid Knob Lock (If installed)

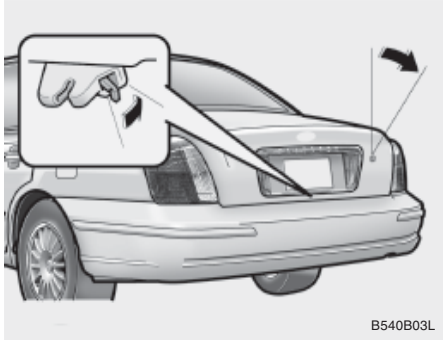

If the trunk lid lock knob (located near the latch) is in the "LOCK" position when the trunk lid is closed, it will not be possible to open the trunk lid by using the remote release. In this instance, use the master key to unlock and open the trunk lid.
To allow the trunk lid to be opened with the remote release, push the trunk lid lock knob down, then to the opposite direction of the "LOCK" position.

NOTE:
Doors and trunk should be kept locked and keys be kept out of the reach of children. Parents also should teach their children about the dangers of playing in trunks.

B540B02E-AAT
Trunk Lid Emergency Latch Release

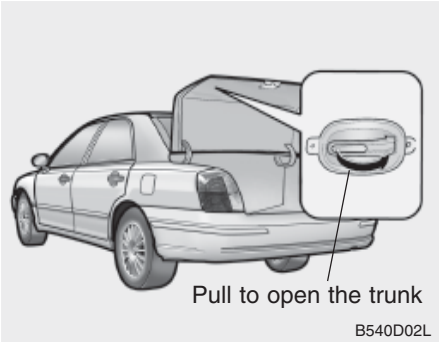

Your vehicle is equipped with a glow-in-the dark emergency trunk release lever located inside the trunk. It will glow after the trunk is closed. When pulled, this lever will release the trunk latch mechanism and open the trunk.

NOTE:

- **If a person is locked in the trunk by one's own will or by another person or by accident, pull the emergency trunk release lever on the driver's side of the inside panel of the trunk. This will open the trunk lid.**
- **Hyundai recommends that cars be kept locked and keys be kept out of the reach of children, and that parents teach their children about the dangers of playing in trunks.**

WARNING:

Parents should teach children about the emergency trunk release lever in their vehicle and how to open the trunk lid if they are accidentally locked in the trunk.

B540C01Y-AAT

To unlock using the key

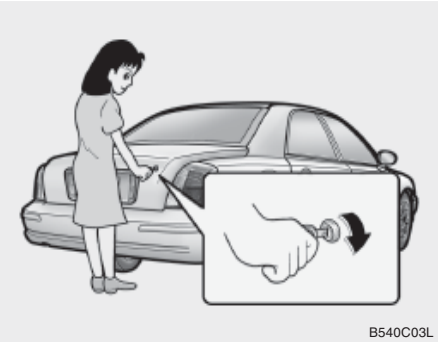

To open the trunk lid, insert the key and turn it clockwise to unlock. The trunk compartment light illuminates when the trunk lid is opened.

B550A02Y-AAT

HIGH-MOUNTED REAR STOP LIGHT (If Installed)

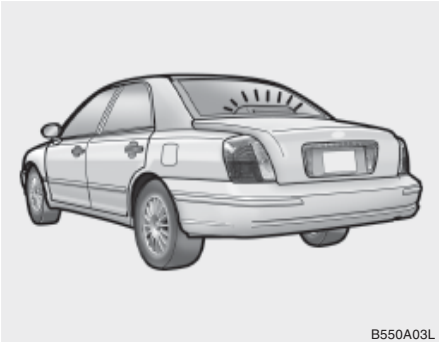

In addition to the lower-mounted rear stoplights on either side of the car, the high mounted rear stoplight in the center of the rear window also lights when the brakes are applied.

B560A02Y-GAT

REMOTE FUEL-FILLER LID RELEASE

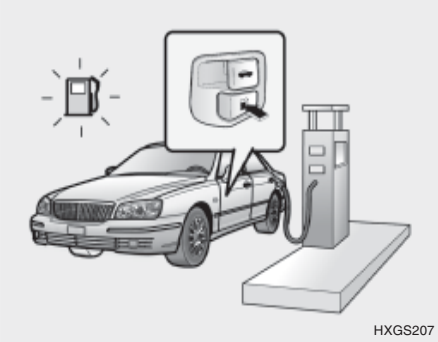

The fuel-filler lid may be opened from inside the vehicle by pushing on the fuel-filler lid opener located on the driver's door.

NOTE:

If the fuel-filler lid will not open because ice has formed around it, tap lightly or push on the lid to break the ice and release the lid. Do not pry on the lid. If necessary, spray around the lid with an approved de-icer fluid (do not use radiator anti-freeze) or move the vehicle to a warm place and allow the ice to melt.

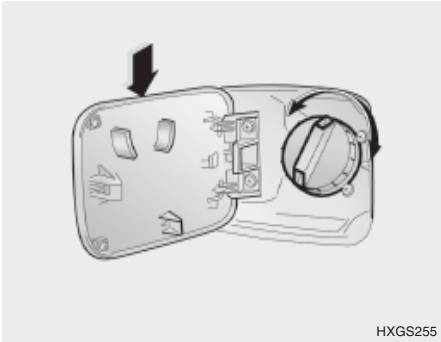

WARNING:

Gasoline vapors are dangerous. Before refueling, always stop the engine and never allow sparks or open flames near the filler area. If you need to replace the filler cap, use a genuine Hyundai replacement part.
If you open the fuel filler cap during high ambient temperatures, a slight "pressure sound" may be heard. This is normal and not a cause for concern.
Whenever you open the fuel filler cap, turn it slowly.

B560B01L-GAT

Manual Fuel Filler Lid Release

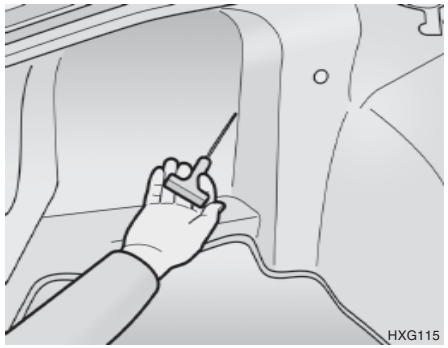

If the fuel filler lid cannot be opened using the remote opener, a manual opener handle is located inside the trunk on the left side. Open the fuel filler lid by pulling on this handle as shown illustration.

B570A02A-GAT

HOOD RELEASE

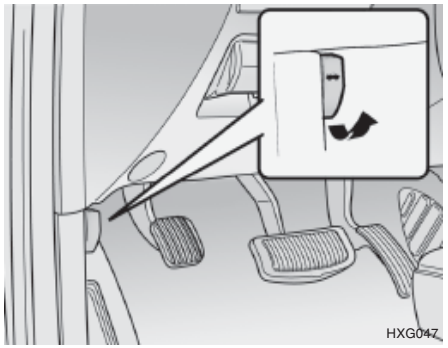

1. Pull the release knob to unlatch the hood.
2. Press the safety catch lever up and lift the hood.
3. Raise the hood by hand.

When closing the hood, slowly close the hood and make sure it locks into place.

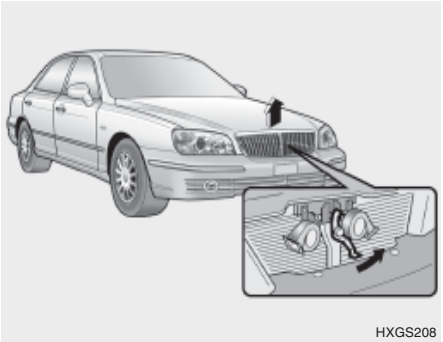

WARNING:

- **Always double check to be sure that the hood is firmly latched before driving away. If it is not latched, the hood could fly open while the vehicle is being driven, causing a total loss of visibility, which might result in an accident.**
- **Do not move the vehicle with the hood in the raised position, as vision is obstructed and the hood could fall or be damaged.**

B500A01L-GAT

ACCESSORY BOX

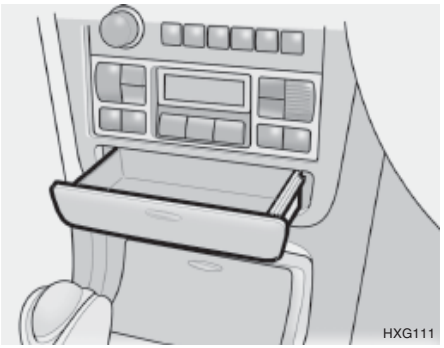

The accessory bax may be opened by pushing at its top edge.
It is used for storing small commodities.

B500D07O-GAT

POWER OUTLET (If Installed)

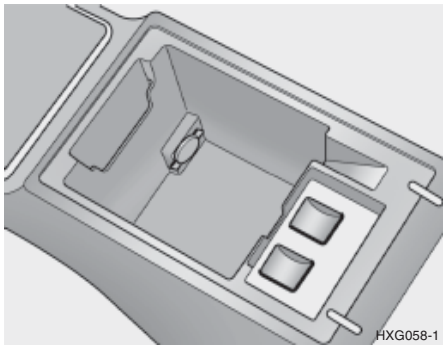

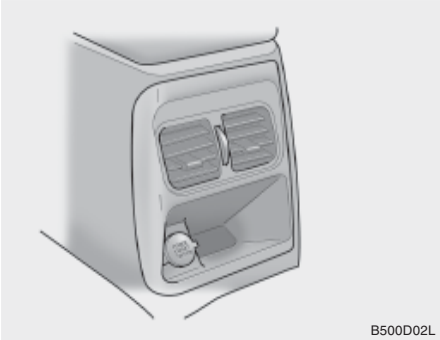

These supply 12V electric power to operate electric accessories or equipment only when the key is in the "ON" or "ACC" position.

CAUTION:
Do not use electric accessories or equipment other than the Hyundai genuine parts in the socket.

B540D01L-GAT

LUGGAGE NET

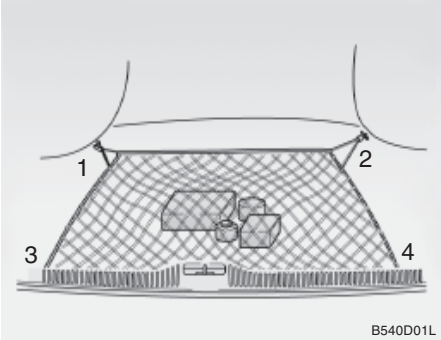

When loading the objects in the trunk room, hook the four rings located in the trunk to attach the luggage net in order as shown illustration.
This will prevent the objects from sliding.

CAUTION:
Do not place the fragile or bulky objects in the trunk room to prevent the damage.

B450B01E-GAT

CD AUTO CHANGER (If Installed)

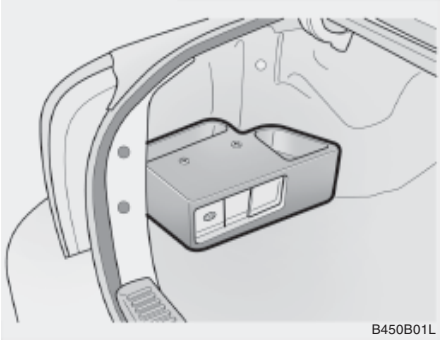

A CD Auto Changer is located in the left side of the trunk. This system can store up to 8 CDs.
You may select music without changing disks. First, open the CD Auto Changer door and insert 8 CDs by taking out the magazine. Then, push

the magazine into the CD Auto Changer. The CD may be operated with the passenger compartment audio system controls.

B580A01L-GAT
SUN VISOR

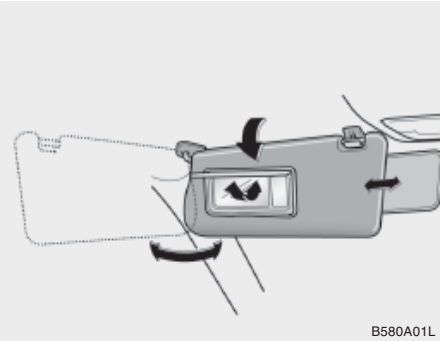

Your Hyundai is equipped with sun visors to give the driver and front passenger either frontal or sideward shade. The sun visors are fitted on both sides on all models. To reduce glare or to shut out direct rays of the sun, turn the sun visor down to block the annoyance.
A vanity mirror is provided on the back of the sun visor for the driver and the front passenger.

NOTE:
The Supplemental Restraint System (SRS) label containing useful information can be found on the back of each sun visor.

CAUTION:
Do not place the sun visor in such a manner that it obscures visibility of the roadway, traffic or other objects.

B620A01L-AAT
DOOR COURTESY LIGHT

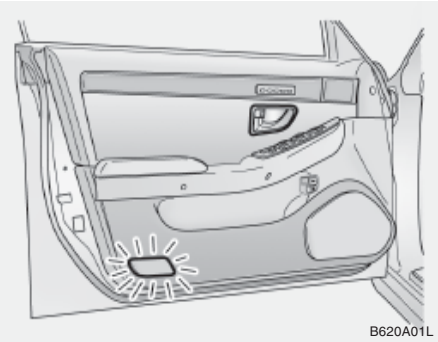

A red light comes on when the door is opened. The purpose of this light is to assist when you get in or out and also to warn passing vehicles.

B610A02Y-GAT
HORN

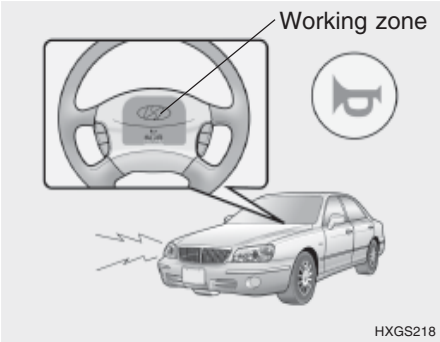

Press the center hub on the steering wheel to sound the horn.

B611A01L-AAT

REAR SEAT ARM REST

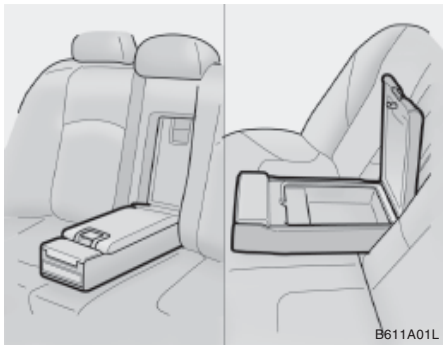

This arm rest is located in the center of the rear seat back with box.

B600A02Y-AAT

STEERING WHEEL TILT LEVER

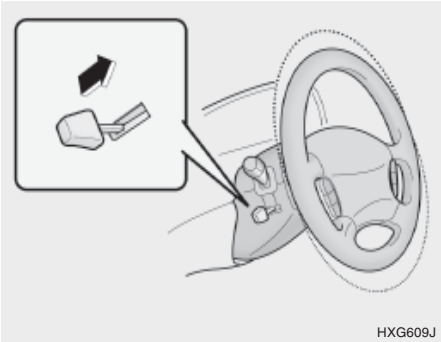

To adjust the steering wheel:

1. Pull the lever upward and hold it to unlock.
2. Raise or lower the steering wheel to the desired position.
3. After adjustment, release the lever.

WARNING:
Do not attempt to adjust the steering wheel while driving as this may result in loss of control of the vehicle and serious injury or death.

B600B01L-GAT

STEERING WHEEL ELECTRIC TILT AND TELESCOPIC (If Installed)

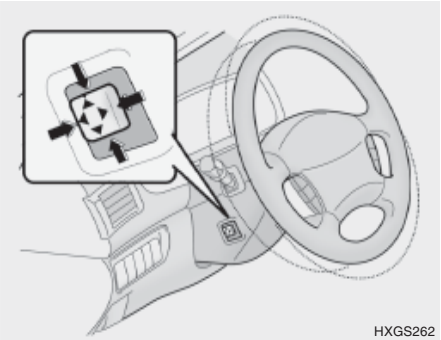

To adjust the desired position of the steering wheel, operate the adjusting switch on the left side of the steering wheel.

WARNING:
Do not attempt to adjust the steering wheel while driving as this may result in loss of control of the vehicle and serious injury or death.

B340G02Y-GAT

HEADLIGHT LEVELING DEVICE SYSTEM (If Installed)

Left-Hand Drive

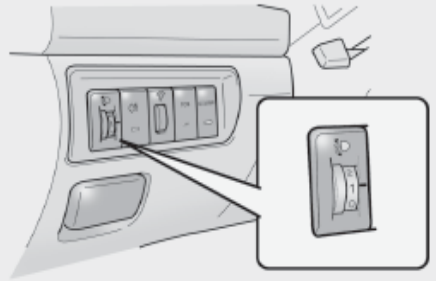

B340G02L

Right-Hand Drive

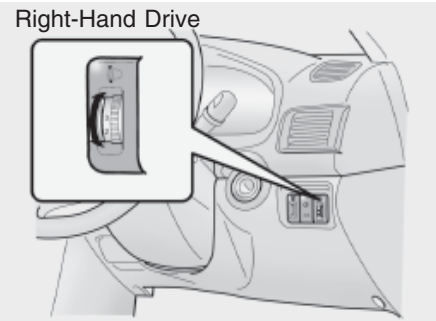

B340G02L.DAG

To adjust the headlight beam level according to the number of the passengers and the loading weight in the luggage area, turn the beam leveling switch.

The higher the number of the switch position, the lower the headlight beam level. Always keep the headlight beam at the proper leveling position, or headlights may dazzle other road users.

Listed below are the examples of proper switch settings. For loading conditions other than those listed below, adjust the switch position so that the beam level may be the nearest as the condition obtained according to the list.

Loading condition	Switch position
Driver only	0
Driver + front passenger	0
Full passengers (including driver)	1
Full passengers (including driver) + full trunk loading (or light trailer loading)	2
Driver + full trunk loading (or maximum trailer loading)	3

B660A01S-GAT

CRUISE CONTROL (If installed)

Left-Hand Drive

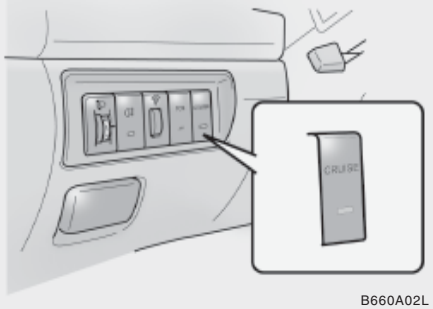

B660A02L

Right-Hand Drive

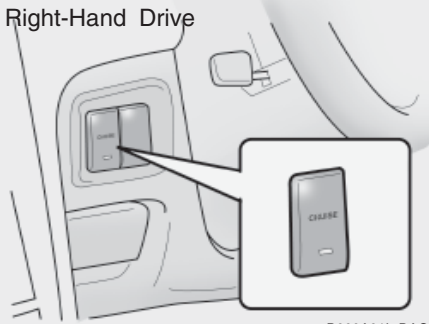

B660A01L-DAG

The cruise control system provides automatic speed control for your comfort when driving on freeways, tollroads, or other noncongested high ways. This is designed to function above approximately 40 km/h (25 mph).

B660B01L-GAT

To Set the Cruise Speed

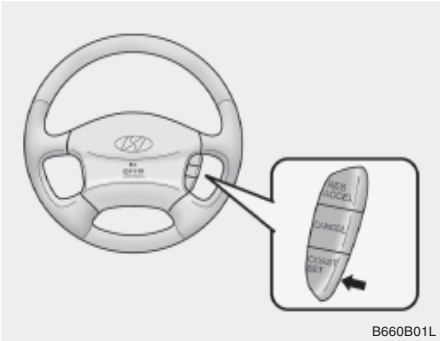

B660B01L

1. Push in the cruise control main switch. This turns the system on.
2. Accelerate to desired cruising speed above 40 km/h (25 mph).
3. Push the control switch "SET" (COAST) position. The "CRUISE" indicator light in the instrument cluster will illuminate after you have set the vehicle speed at the desired speed.
4. Remove your foot from the accelerator pedal and the desired speed will automatically be maintained.
5. To increase speed, depress the accelerator pedal enough for the vehicle to exceed the preset speed. When you remove your foot from the accelerator pedal, the vehicle will return to the speed you have set.

B660C02L-GAT

To Cancel the Cruise Speed

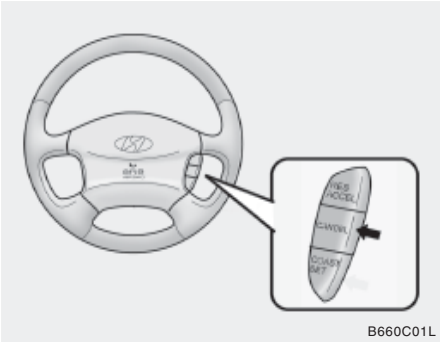

B660C01L

Do one of the following:

- o Push the control switch "CANCEL".
- o Depress the brake pedal.
- o Depress the clutch pedal (Manual transaxle).
- o Shift the selector lever in "P" or "N" position (Automatic transaxle).
- o Decrease the vehicle speed lower than memory speed by 15 km/h (9 mph).
- o Decrease the vehicle speed approximately to less than 40 km/h (25 mph).
- o Release the main switch.

B660D01L-GAT

To Resume the Preset Speed

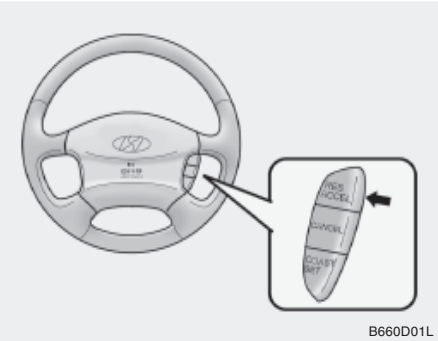

B660D01L

The vehicle will automatically resume the speed set prior to cancellation when you push the control switch "RESUME (ACCEL)" (above 40 km/h).

B660E01L-GAT

To Reset at a Faster Speed

1. Push the control switch "RESUME (ACCEL)"
2. Accelerate to desired speed. While the control switch is held, the vehicle will gradually gain speed.

B660F01L-GAT

To Reset at a Slower Speed

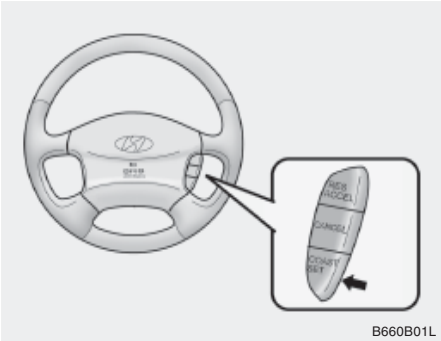

B660B01L

1. Push the control button "SET (COAST)". The vehicle will decelerate.
2. When the desired speed is obtained, release the control button. While the control switch is pushed, the vehicle speed will gradually decrease.

NOTE:

- **Keep the main switch off when not using the cruise control.**
- **Do not use the cruise control when it may not be safe to keep the car at a constant speed, for instance, driving in heavy or varying traffic, or on slippery (rainy, icy or snow-covered) or winding roads or over 6% up-hill or down-hill roads.**
- **Pay particular attention to the driving conditions whenever using the cruise control system.**
- **During cruise-speed driving with manual transaxle vehicle, do not shift into neutral without depressing the clutch pedal, since the engine will be overrevved. If this happens, depress the clutch pedal or release the main switch.**
- **During normal cruise control operation, when the set button is activated or reactivated after applying the brakes, the cruise control will energize after approximately 3 seconds. This delay is normal.**

B610A01L-GAT

AUDIO REMOTE CONTROL SWITCH (If installed)

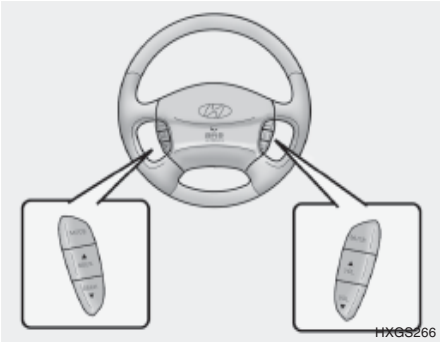

The steering wheel audio remote control switch is installed to promote safe driving. However, do not operate audio remote control switches simultaneously.

MODE Switch

Press the MODE switch to select Radio, Tape, CD (compact disc) and CDC. (compact disc changer)
Each press of the switch changes the display as follows:

FM1 → FM2 → AM(LW) → TAPE → CD → CDC

SEEK (▲/▼) Switch

Press the SEEK switch 1 sec. or more.

1. RADIO mode

When the SEEK (▲) is pressed, the unit will automatically tune to the next higher frequency and when the SEEK (▼) switch is pressed, it will automatically tune to the next lower frequency.

2. TAPE mode

- o Pressing the SEEK (▲) will play the beginning of the next music segment.
- o Pressing the SEEK (▼) will start replay at the beginning of the music just listened to.

3. CD (compact disc)/CDC (compact disc changer) mode

- o Press the SEEK (▲) once to skip forward to the beginning of the next track.
- o Press the SEEK (▼) once to skip back to the beginning of the track.

MUTE Switch

- o Press the MUTE switch to disappear the sound.
- o Once again press the MUTE switch to reproduce the sound.

VOL (▲/▼) Switch

- o Press the VOL (▲) button to increase volume.
- o Press the VOL (▼) button to decease volume.

B710A01L-GAT
HEATING AND COOLING CONTROL

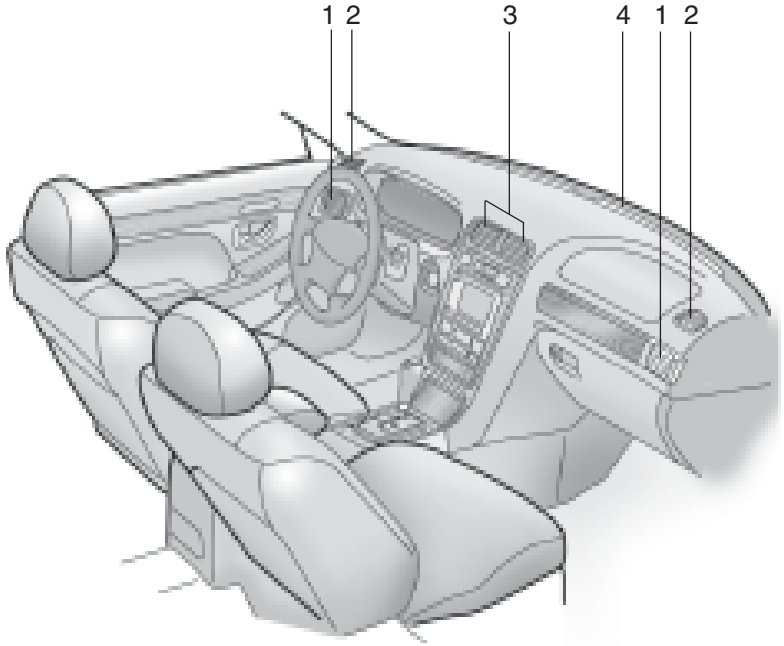

B710A01L-1

1. Side Ventilator
2. Side Defrost Nozzle
3. Center Ventilator
4. Windshield Defrost Ventilator

B710A01L-AAT
VENTILATION

To operate the ventilation system:
- o Set the air intake control at the fresh air ( ) position.
- o To direct all intake air to the dashboard vents, set the airflow control to the face ( ) position.
- o Adjust the fan speed control to the desired speed.

B710B01A-AAT
Center Ventilator

The center ventilators are located in the middle of the dashboard.
To change the direction of the airflow, turn the control knob on the middle of the ventilator as desired.

B710C01Y-AAT
Side Ventilator

The side vent knobs control the amount of outside air entering the vehicle through the side vents. These vents can also be closed,so no air enters through the side vents. To change the direction of the air flow, turn the control knobs as desired.

B680A02L-GAT

ROTARY AND PUSH BUTTON TYPE (If Installed)

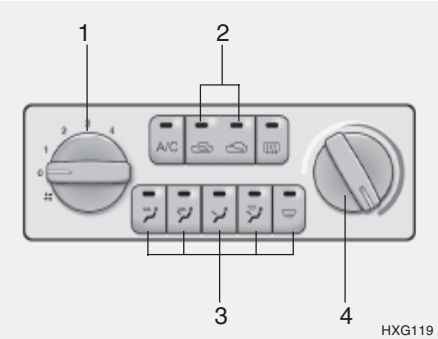

There are four controls for the heating and cooling system. They are:

1. Fan speed control
2. Air intake control
3. Air flow control
4. Temperature control

B670B03Y-AAT

Fan Speed Control (Blower Control)

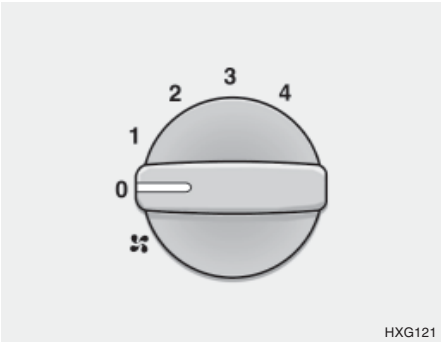

This is used to turn the blower fan on and off and to select the fan speed. The blower fan speed, and therefore the volume of air delivered from the system, may be controlled manually by setting the blower control between the 1 and 4 position.

B670C01Y-AAT

Air Intake Control

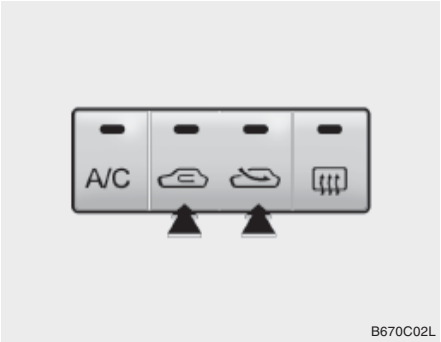

This is used to select fresh outside air or recirculating of inside air.

Fresh
Recirculation

With the "" mode selected, air enters the vehicle from outside and is heated or cooled according to the other functions selected.
With the "" mode selected, air from within the passenger compartment is drawn through the heating system and heated or cooled according to the other functions selected.

NOTE:

- **It should be noted that prolonged operation of the heating system in "" mode will give rise to misting of the windshield and side windows and the air within the passenger compartment will become stale. In addition prolonged use of the air conditioning with the "" mode selected may result in the air within the passenger compartment becoming excessively dry.**
- **When the ignition switch is turned "ON", the air intake control will change to "" mode (regardless of switch position). This is normal operation.**

B670D01L-AAT

Air Flow Control

This is used to direct the flow of air. Air can be directed to the floor, dashboard outlets, or windshield. Five symbols are used to represent Face, Bi-Level, Floor, Floor-Defrost and Defrost air position.

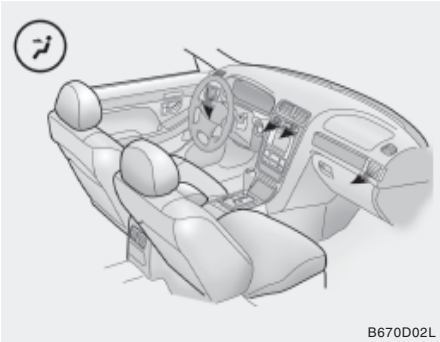

Face-Level

Selecting the "Face" mode will cause air to be discharged through the face level vents.

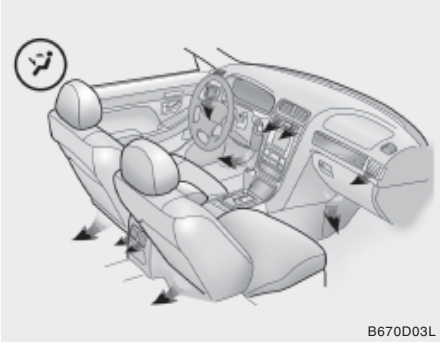

Bi-Level

Air is discharged through the face vents and the floor vents. This makes it possible to have cooler air from the dashboard vents and warmer air from the floor outlets at the same time.

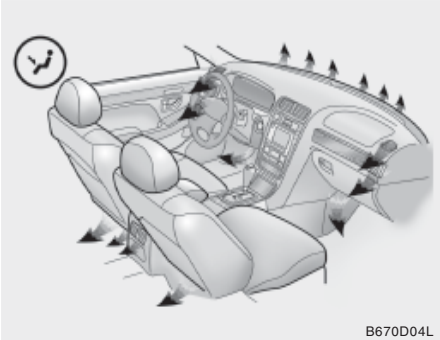

Floor-Level

Air is discharged through the floor vents, windshield defroster nozzle, side defroster nozzle, side ventilator.

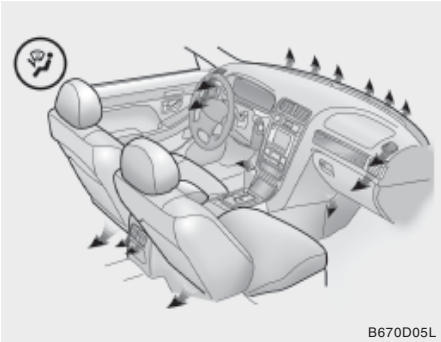

Floor-Defrost Level

Air is discharged through the windshield defrost nozzle, the floor vents, side defroster nozzle, side ventilator.
If the "Floor-Defrost" mode is selected, the A/C will turn on automatically and "Fresh" mode will be activated.

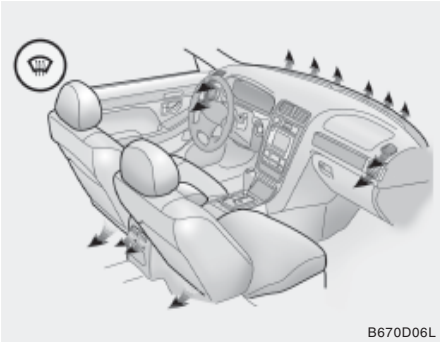

Defrost-Level

Air is discharged through the windshield defrost nozzle, side defroster nozzle, side ventilator.
If the "Defrost" mode is selected, the A/C will turn on automatically and "Fresh" mode will be activated.

B670E02A-AAT

Temperature Control

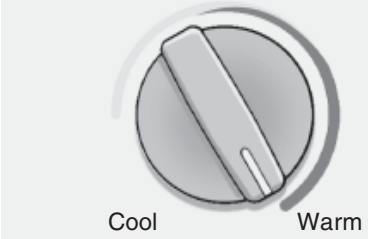

HXG124

This control is used to adjust the degree of heating or cooling desired.

B690A02S-AAT

HEATING CONTROLS

HXG119

For normal heating operation, set the air intake control to the fresh air ( ) position and the air flow control to the floor ( ) position.

For faster heating, the air intake control should be set in the recirculate ( ) position.

If the windows fog up, set the air flow control to the "Def" (defroster) position. (The A/C will turn on automatically and "Fresh" mode will be activated.)

For maximum heat, move the temperature control to "Warm".

B700A01A-AAT

BI-LEVEL HEATING

B700A01L

Your Hyundai is equipped with bi-level heating controls. This makes it possible to have cooler air from the dashboard vents and warmer air from the floor outlets at the same time. To use this feature:

- o Set the air intake control to the fresh air ( ) position.
- o Set the air flow control at the bi-level ( ) position.
- o Set the temperature control between "Cool" and "Warm"

B720A03FC-AAT

DEFROSTING/DEFOGGING

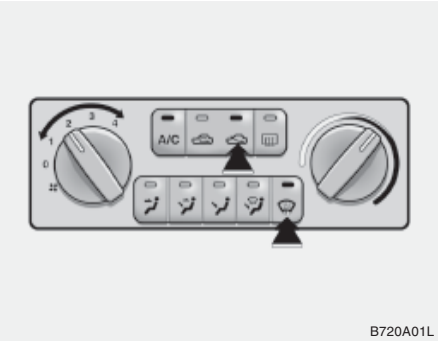

B720A01L

Use the heating/ventilation system to defrost or defog the windshield:

To remove interior fog on the windshield:

- o Set the air flow control to the defrost ( ) position. (The A/C will turn on automatically and "Fresh" mode will be activated.)
- o Set the temperature control to the desired position.
- o Set the fan speed control between "1" and "4" position.

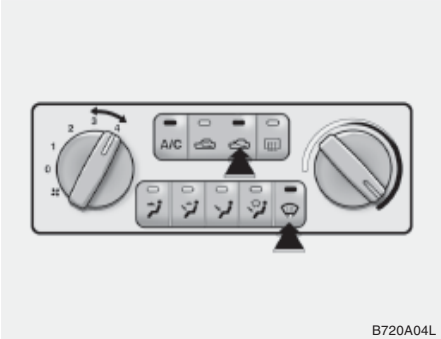

B720A04L

To remove frost or exterior fog on the windshield:

- o Set the air flow control to the defrost ( ) position. (The A/C will turn on automatically and "Fresh" mode will be activated.)
- o Set the temperature control to warm.
- o Set the fan speed control to position "3" or "4".

NOTE:

When the A/C is operated continuously on the floor-defrost level ( ) or defrost level ( ), it may cause fog to form on the exterior windshield. If this occurs, set the air flow control to the face level position ( ) and fan speed control to the low position.

B730A01FC-AAT

OPERATION TIPS

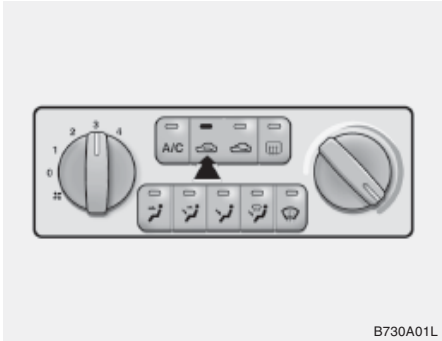

B730A01L

- o To keep dust or unpleasant fumes from entering the car through the ventilation system, temporarily set the air intake control to the position. Be sure to return the control to the position when the irritation has passed to keep fresh air in the vehicle. This will help keep the driver alert and comfortable.
- o Air for the heating/cooling system is drawn in through the grilles just ahead of the wind-shield. Care should be taken that these are not blocked by leaves, snow, ice or other obstructions.

o To prevent interior fog on the windshield, set the air intake control to the fresh air (⊂⊃) position and fan speed to the desired position.

B740A01S-AAT

AIR CONDITIONING SYSTEM

Air Conditioning Switch

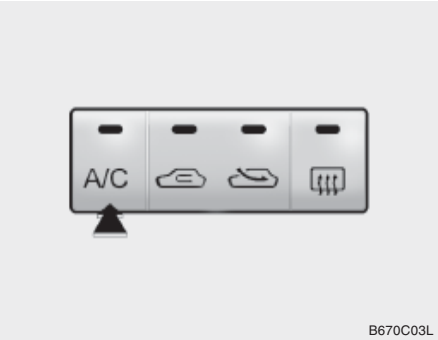

B670C03L

The air conditioning is turned on or off by pushing the A/C button on the heating/air conditioning control panel.

B740B01L-GAT

Air Conditioning Operation (If Installed)

Cooling

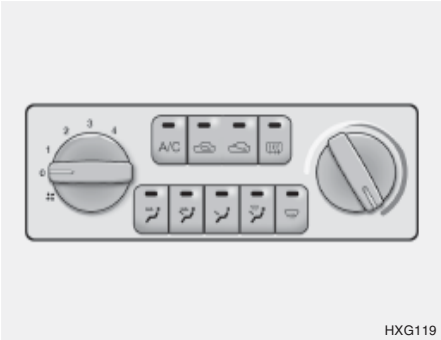

HXG119

To use the air conditioning to cool the interior:

- o Set the side vent control to "OFF", to shut off the outside air entry.
- o Turn on the fan control switch.
- o Turn on the air conditioning switch by pushing in on the switch. The air conditioning indicator light should come on at the same time.
- o Set the air intake control to the fresh air (⊂⊃) position.
- o Set the temperature control to "Cool". ("Cool" provides maximum cooling. The temperature may be moderated by moving the control toward "Warm".)
- o Adjust the fan control to the desired speed. For greater cooling, turn the fan control to one of the higher speeds or temporarily select the recirculate (⊂⊃) position on the air intake control.

B740C01A-AAT

De-Humidified Heating

For dehumidified heating:

- o Turn on the fan control switch.
- o Turn on the air conditioning switch. The air conditioning indicator light should come on at the same time.
- o Set the air intake control to the fresh air ( ) position.
- o Set the air flow control to the face ( ) position.
- o Adjust the fan control to the desired speed.
- o For more rapid action, set the fan at one of the higher speeds.
- o Adjust the temperature control to provide the desired amount of warmth.

B970A01Y-AAT

AUTOMATIC HEATING AND COOLING CONTROL SYSTEM (If Installed)

Your Hyundai is equipped with an automatic heating and cooling control system controlled by simply setting the desired temperature.

B970B01L-GAT

Heating and Cooling Controls

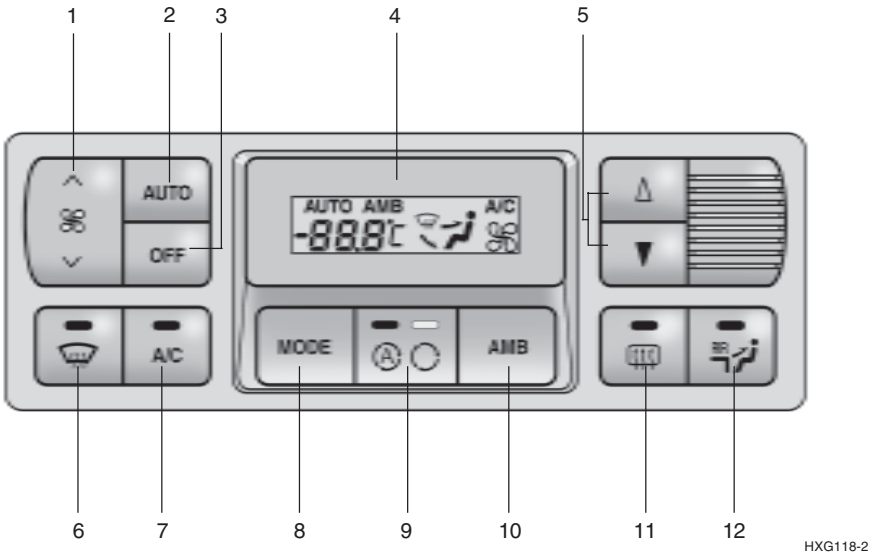

1. Blower Fan Control Switch
2. AUTO (Automatic Control) Switch
3. OFF Switch
4. Display Window
5. Temperature Control Button
6. Defroster Switch
7. Air Conditioning Switch
8. Air Flow Control Switch
9. Air Intake Control Switch/Air Quality System Switch (If installed)
10. Ambient Switch
11. Rear Window Defroster Switch
12. Rear Ventilator Switch

B970C03Y-GAT

Automatic Operation

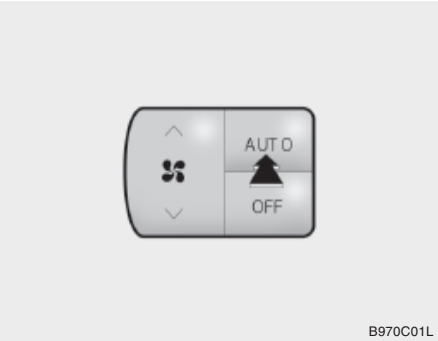

B970C01L

The FATC (Full Automatic Temperature Control) system automatically controls the heating and cooling by doing as follows:

1. Push the "AUTO" switch. The indicator light will illuminate confirming that the Face, Floor and/or Bi-Level modes as well as the blower speed and, air conditioner will be controlled automatically.

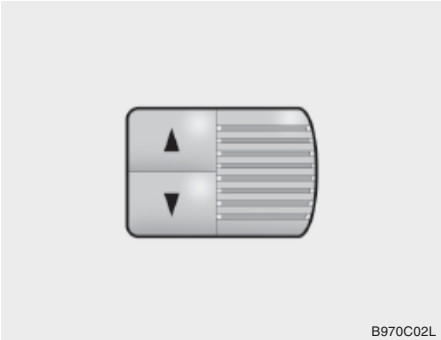

B970C02L

2. Push the "TEMP" button to set the desired temperature.
   The temperature will increase to the maximum 32 °C(90 °F) by pushing on the ▲ button. Each push of the button will cause the temperature to increase by 0.5 °C(1 °F).
   The temperature will decrease to the minimum 17 °C(62 °F) by pushing on the ▼ button. Each push of the button will cause the temperature to decrease by 0.5 °C(1 °F).

NOTE:

If the battery has been discharged or disconnected, the temperature mode will reset to centigrade degree.

This is a normal condition and you can adjust the temperature mode from centigrade to farenheit as follows;
Press the TEMP button down 3 seconds or more with the AMB button held down. The display shows that the unit of temperature is adjusted to contigrade or fahrenheit.
(°C → °F or °F → °C)

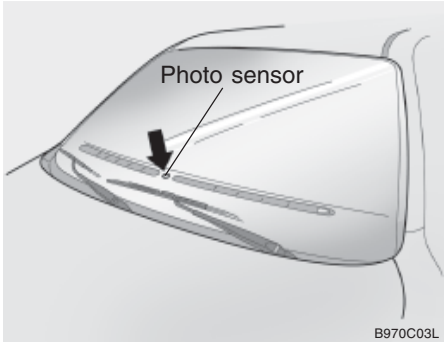

B970C03L

NOTE:

Never place things on the sensor which is located in the car on the instrument panel to ensure better control of the heating and cooling system.

B995A01Y-GAT

AMBIENT SWITCH

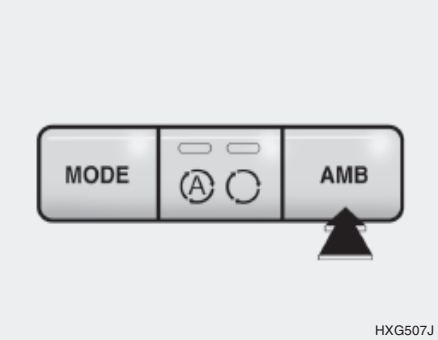

Pressing the AMB button displays the ambient temperature on VFD.

B980A01Y-AAT

MANUAL OPERATION

The heating and cooling system can be controlled manually as well as by pushing buttons other than the "AUTO" button. At this state, the system sequentially works according to the order of buttons selected.
The function of the buttons which are not selected will be controlled automatically.
Press the "AUTO" button in order to convert to automatic control of the system.

B980B01Y-AAT

Fan Speed Control

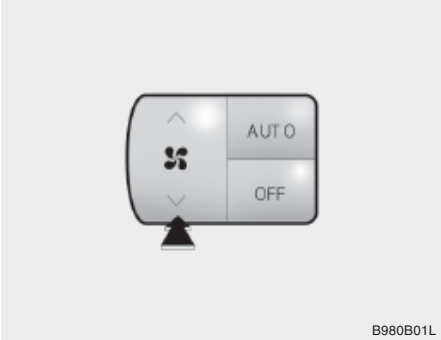

The fan speed can be set to the desired speed by pressing the appropriate fan speed control button. The higher the fan speed is, the more air is delivered. Pressing the "OFF" button turns off the fan.

B980C02E-GAT

Air Intake Control Switch (With A.Q.S) (If Installed)

This is used to select fresh outside air or recirculate inside air automatically.

▭ : **OFF**
▬ : **ON**

▭ ▭
Ⓐ ◯ **Fresh mode :**
Air enters the vehicle from the outside and is heated or cooled according to the function selected.

▭ ▬
Ⓐ ◯ **Recirculation mode :**
Air from within the passenger compartment will be drawn through the heating system and heated or cooled according to the function selected.

Exhaust gas cutoff mode :
Air enters the vehicle from the outside. But if exhaust gas enters the vehicle from the outside, the exhaust gas cut-off mode ( ) is automatically converted to the ( ) mode, to prevent exhaust gas from entering the vehicle.

NOTE:

- **It should be noted that prolonged operation of the heating system in recirculation mode ( ) will give rise to misting of the windshield and side windows and the air within the passenger compartment will become stale. In addition, prolonged use of the air conditioning with the recirculation mode ( ) selected may result in the air within the passenger compartment becoming excessively dry.**
- **When the ignition switch is turned "ON", the air intake control will change to ( ) mode (regardless of switch position). This is normal operation. The air intake control operates in "AUTO" mode when turning the ignition to the ON position if the "AUTO" mode was used before shutting off the engine.**

CAUTION:
If the windows fog up with the Recirculation or A.Q.S mode selected, set the air intake control to the Fresh air position or A.Q.S control to "OFF".

B980D01Y-AAT
Heating and Cooling System Off

Press the "OFF" button to stop the operation of the heating and cooling system.

B980E01L-GAT
Air Flow Control

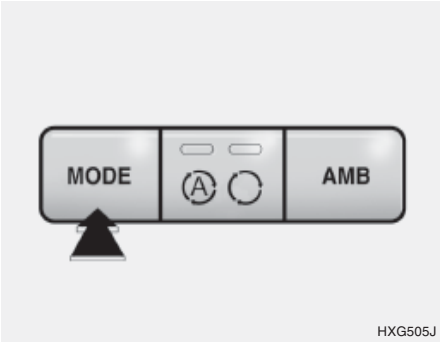

This is used to direct the flow of air. Air can be directed to the floor, dashboard outlets, or windshield. Four symbols are used to represent Face, Bi-Level, Floor and Floor-Defrost air position.

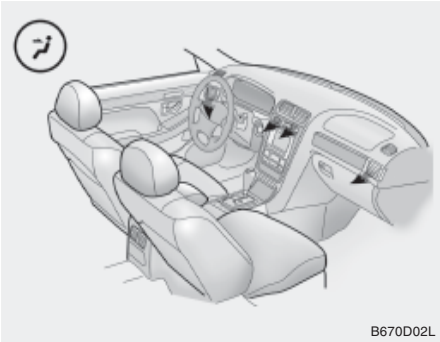

Face-Level

When selecting the "Face" mode, the indicator light will come on, causing air to be discharged through the face level vents.

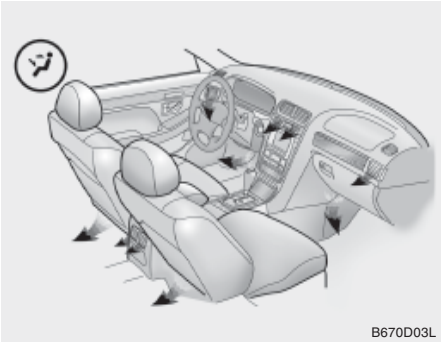

Bi-Level

When selecting the "Bi-Level" mode, the indicator light will come on and the air will be discharged through the face vents and the floor vents. This makes it possible to have cooler air from the dashboard vents and warmer air from the floor outlets at the same time.

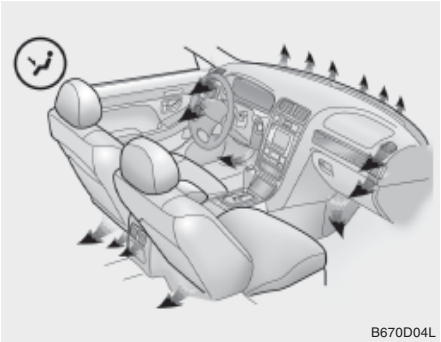

Floor-Level

When selecting the "Floor-Level" mode, the indicator light will come on and the air will be discharged through the floor vents, windshield defrost nozzle, side defroster nozzle, side ventilator.

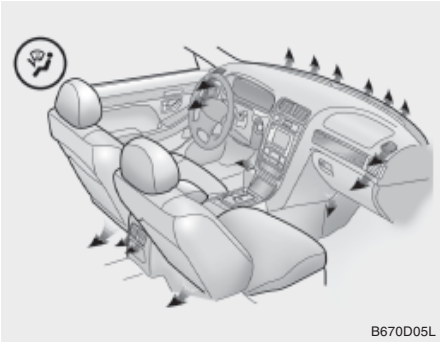

Floor-Defrost Level

When selecting the "Floor-Defrost" mode, the indicator light will come on and the air will be discharged through the windshield defrost vents, the floor vents, side defroster nozzle side ventilator .

B980C01Y-GAT

Defrost Switch

When the "Defrost" button is pressed, the "" mode will be automatically selected and the air will be discharged through the windshield defrost vents. To assist in defrosting the air conditioning will operate if ambient temperature is higher than 3.5°C and automatically turns off if the ambient temperature drops below 3.5°C.

B760A01L-GAT

AIR FILTER (FOR EVAPORATOR AND BLOWER UNIT)

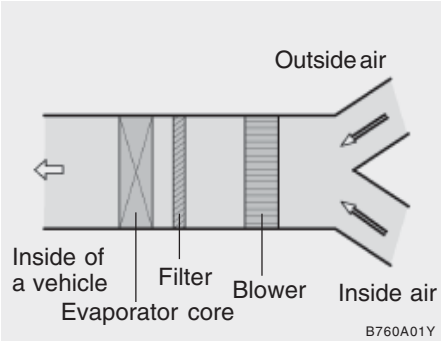

The air filter is located in front of the evaporator unit behind the glove box. It operates to decrease pollutants from entering the car and to filter the air. To replace the air filter, refer to the page 6-18.

CAUTION:

- **Replace the filter every 20,000 km (12,000 miles) or once a year. If the car is being driven in severe conditions such as dusty, rough roads, more frequent air filter inspections and changes are required.**
- **When the air flow rate is suddenly decreased, it must be checked at authorized dealer.**

B740D01Y-AAT

Operation Tips

- If the interior of the car is hot when you first get in, open the windows for a few minutes to expel the hot air.
- When you are using the air conditioning system, keep all windows closed to keep hot air out.
- When moving slowly, as in heavy traffic, shift to a lower gear. This increases engine speed, which in turn increases the speed of the air conditioning compressor.
- On steep grades, turn the air conditioning off to avoid the possibility of the engine overheating.
- During winter months or in periods when the air conditioning is not used regularly, run the air conditioning once every month for a few minutes. This will help circulate the lubricants and keep your system in peak operating condition.

B750A02A-AAT

STEREO SOUND SYSTEM

How Car Audio Works

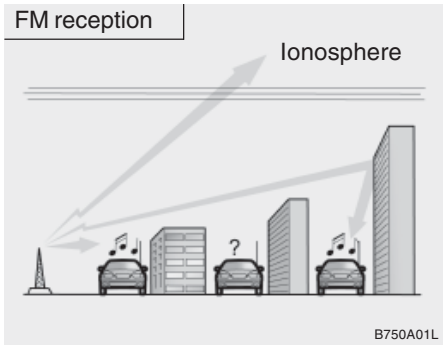

AM and FM radio signals are broadcast from transmitter towers located around your city. They are intercepted by the radio antenna on your car. This signal is then received by the radio and sent to your car speakers.

When a strong radio signal has reached your vehicle, the precise engineering of your audio system ensures high quality reproduction. However, in some cases the signal coming to your vehicle may not be strong and clear. This can be due to factors such as the distance from the radio station, closeness of other strong radio stations or the presence of buildings, bridges or other large obstructions in the area.

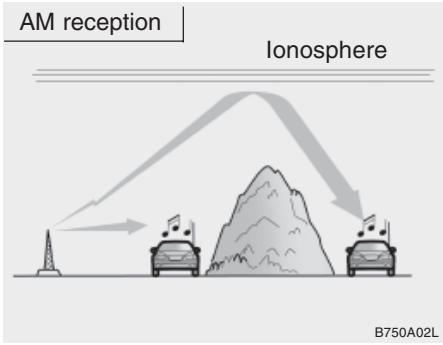

AM broadcasts can be received at greater distances than FM broadcasts. This is because AM radio waves are transmitted at low frequencies. These long, low frequency radio waves can follow the curvature of the earth rather than travelling straight out into the atmosphere. In addition, they curve around obstructions so that they can provide better signal coverage.

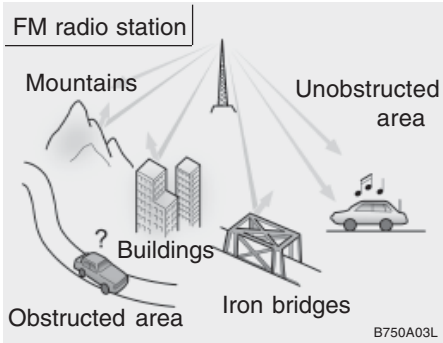

FM broadcasts are transmitted at high frequencies and do not bend to follow the earth's surface. Because of this, FM broadcasts generally begin to fade at short distances from the station. Also, FM signals are easily affected by buildings, mountains, or other obstructions. These can result in certain listening conditions which might lead you to believe a problem exists with your radio. The following conditions are normal and do not indicate radio trouble:

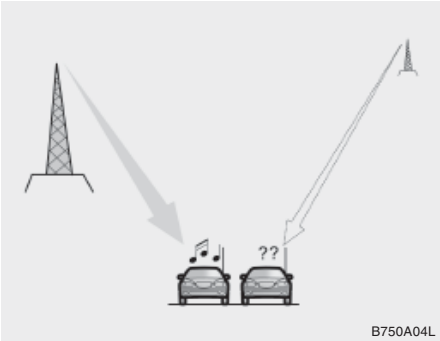

B750A04L

- Fading - As your car moves away from the radio station, the signal will weaken and sound will begin to fade. When this occurs, we suggest that you select another stronger station.
- Flutter/Static - Weak FM signals or large obstructions between the transmitter and your radio can disturb the signal causing static or fluttering noises to occur. Reducing the treble level may lessen this effect until the disturbance clears.

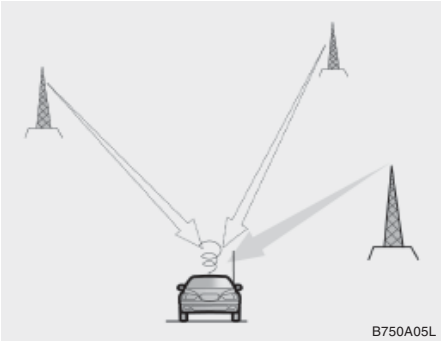
B750A05L

- Station Swapping - As a FM signal weakens, another more powerful signal near the same frequency may begin to play. This is because your radio is designed to lock onto the clearest signal. If this occurs, select another station with a stronger signal.
- Multi-Path Cancellation - Radio signals being received from several directions can cause distortion or fluttering. This can be caused by a direct and reflected signal from the same station, or by signals from two stations with close frequencies. If this occurs, select another station until the condition has passed.

B750B02Y-AAT

Using a cellular phone or a two-way radio

When a cellular phone is used inside the vehicle, noise may be produced from the audio equipment. This does not mean that something is wrong with the audio equipment. In such a case, use the cellular phone at a place as far as possible from the audio equipment.

CAUTION:
When using a communication system such a cellular phone or a radio set inside the vehicle, a separate external antenna must be fitted. When a cellular phone or a radio set is used with an internal antenna alone, it may interfere with the vehicle's electrical system and adversely affect safe operation of the vehicle.

WARNING:
Don't use a cellular phone when you are driving, you must stop at a safe place to use a cellular phone.

B940A01L-GAT

STEREO RADIO OPERATION (H940B) (If installed)

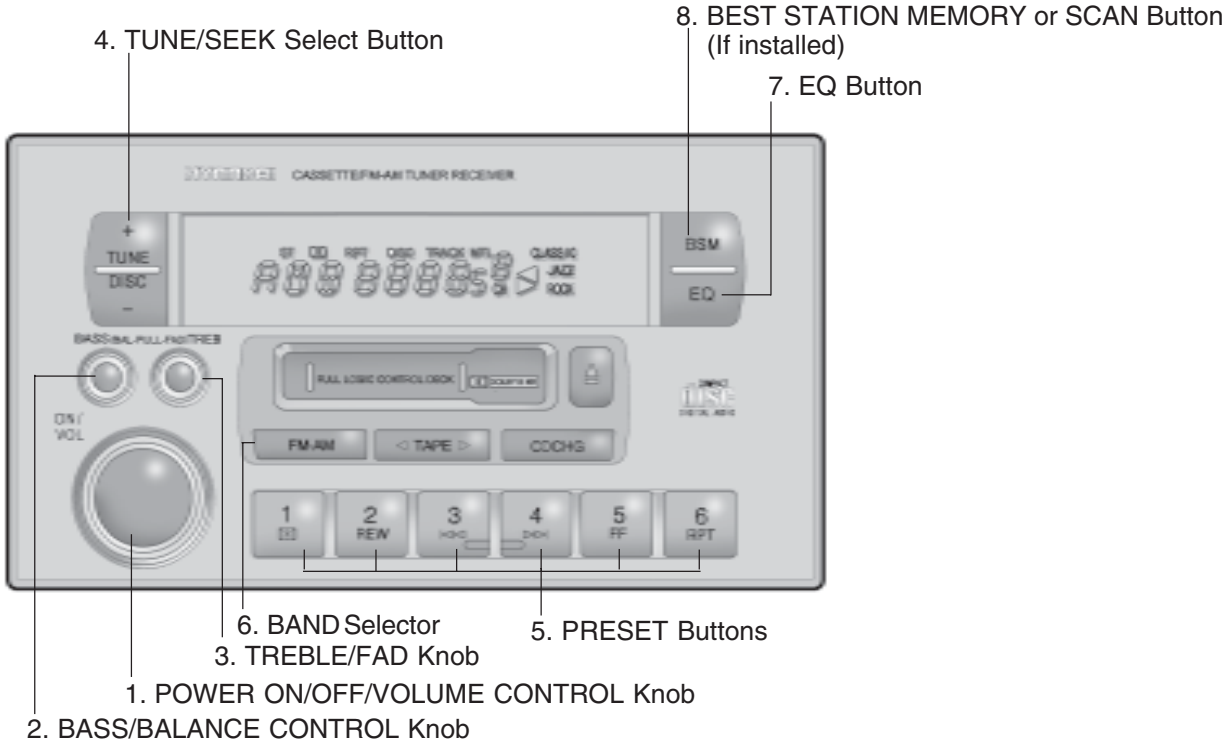

B940A01L

B940B02L-GAT

1. POWER ON-OFF/VOLUME CONTROL KNOB

The radio unit may be operated when the ignition key is in the "ACC" or "ON" position. Press the button to switch the power on. The display shows the radio frequency in the radio mode, the tape direction indicator in the tape mode, or CD track in the CD AUTO CHANGER mode. To switch the power off, press the button again.

VOLUME Control

Rotate the knob clockwise to increase the volume and turn the knob counterclockwise to reduce the volume.

2. BASS/BALANCE Control

BASS Control Knob

Press to pop the knob out. To increase the bass, rotate the knob clockwise, while to decrease the bass, rotate the knob counterclockwise.

BALANCE Control

Further pull the popped-up knob. Rotate the knob clockwise to emphasize right speaker sound. (Left speaker sound will be attenuated) When the control knob is turned counterclockwise, left speaker sound will be emphasized (Right speaker sound will be attenuated).

3. TREBLE/FAD Knob

TREBLE Control Knob

Press to pop the knob out and turn to the left or right for the desired treble tone.

FAD (Fader Control) Knob

Further pull the popped-up knob. Turn the control knob clockwise to emphasize rear speaker sound. (Front speaker sound will be attenuated) When the control knob is turned counterclockwise, front speaker sound will be emphasized. (Rear speaker sound will be attenuated)

4. TUNE (Manual) Select Button

Press the (+) side or (-) side to increase or to decrease the frequency. With the button held down for 0.5 sec. or more, the frequency selection will increase or decrease rapidly.

SEEK Operation (Automatic Channel Selection)

Press the TUNE select button 1 sec. or more. When the (+) side is pressed, the unit will automatically tune to the next higher frequency and when the (-) side is pressed, it will automatically tune to the next lower frequency.

5. PRESET STATION Select Buttons

Six (6) stations for AM, FM and FM2 respectively can be preset in the electronic memory circuit.

HOW TO PRESET STATIONS

Six AM and twelve FM stations may be programmed into the memory of the radio. Then, by simply pressing the band select button and/or one of the six station select buttons, you may recall any of these stations instantly. To program the stations, follow these steps:

- o Press band selector to set the band for AM, FM and FM2.
- o Select the desired station to be stored by seek, scan or manual tuning.
- o Determine the preset station select button you wish to use to access that station.
- o Press the station select button for more than two seconds. A select button indicator will show in the display indicating which select button you have depressed. The frequency display will flash after it has been stored into the memory. You should then release the button, and proceed to program the next desired station. A total of 18 stations can be programmed by selecting one AM and two FM station per button.
- o When completed, any preset station may be recalled by selecting AM, FM or FM2 band and the appropriate station button.

6. BAND Selector

Pressing the button changes the AM, FM1 and FM2 bands. The mode selected is shown on the display.

7. EQ Button

Press the EQ button to select the CLASSIC, JAZZ, ROCK and DEFEAT MODE for the desired tone quality. Each press of the button changes the display as follows;

CLASSIC → JAZZ → ROCK → DEFEAT

8. Best Station Memory Button (BSM) (If installed)

When the BSM button is pressed for two seconds or longer, the six channels from the highest field intensity are selected next and stored in memory. The stations selected are stored in the sequence frequency from the first preset key.

9. SCAN Button (If installed)

When the scan button is pressed, the frequency will increase and the receivable stations will be tuned in one after another, receiving each station for 5 seconds. To stop scanning, press the scan button again.

B940C01L-GAT

CASSETTE TAPE PLAYER OPERATION (H940B) (If installed)

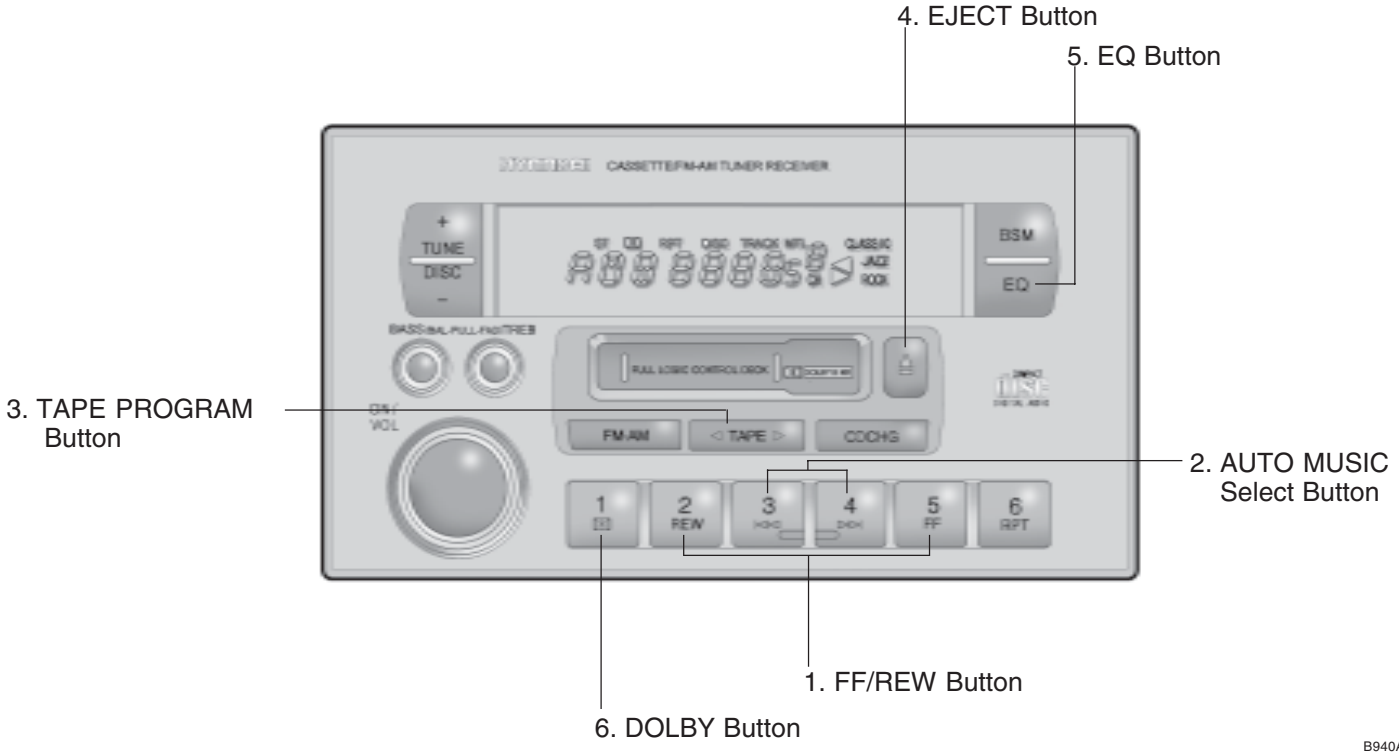

B940A01L

B940D01L-GAT

1. FF/REW Button

- o Fast forward tape winding starts when the FF button is pressed during PLAY or REW mode.
- o PLAY starts when the FF button is pressed again during FF mode.
- o Tape rewinding starts when the REW button is pressed during PLAY or FF mode.
- o PLAY starts when the REW button pressed again during REW mode.

2. AUTO MUSIC SELECT Button

Press the button to find the starting point of each song in a prerecorded music tape. The quiet space between songs (must have at least a 4 sec. gap) can be accepted by the AUTO MUSIC SELECT button.

- o Pressing the ▶▶ will play the beginning of the next music segment.
- o Pressing the ◀◀ will start replay at the beginning of the music just listened to.
- o To stop FF or REW action, press the button again.

3. TAPE PROGRAM Button

This allows you to play the reverse side of the tape by merely pressing the program button. An arrow will appear in the display to show tape direction.

4. EJECT button

- o When the EJECT button is pressed with a cassette loaded, the cassette will eject.
- o When the EJECT button is pressed during FF/REW mode, the cassette will eject.

5. EQ Button

Press the EQ button to select the CLASSIC, JAZZ, ROCK and DEFEAT MODE for the desired tone quality. Each press of the button changes the display as follows;

CLASSIC → JAZZ → ROCK → DEFEAT

6. DOLBY Button

If you get background noise during tape PLAY, you can reduce this considerably by merely pressing the DOLBY button. If you want to cancel the DOLBY feature, press the button again.

B940E01L-GAT

CD AUTO CHANGER (H940B) (If installed)

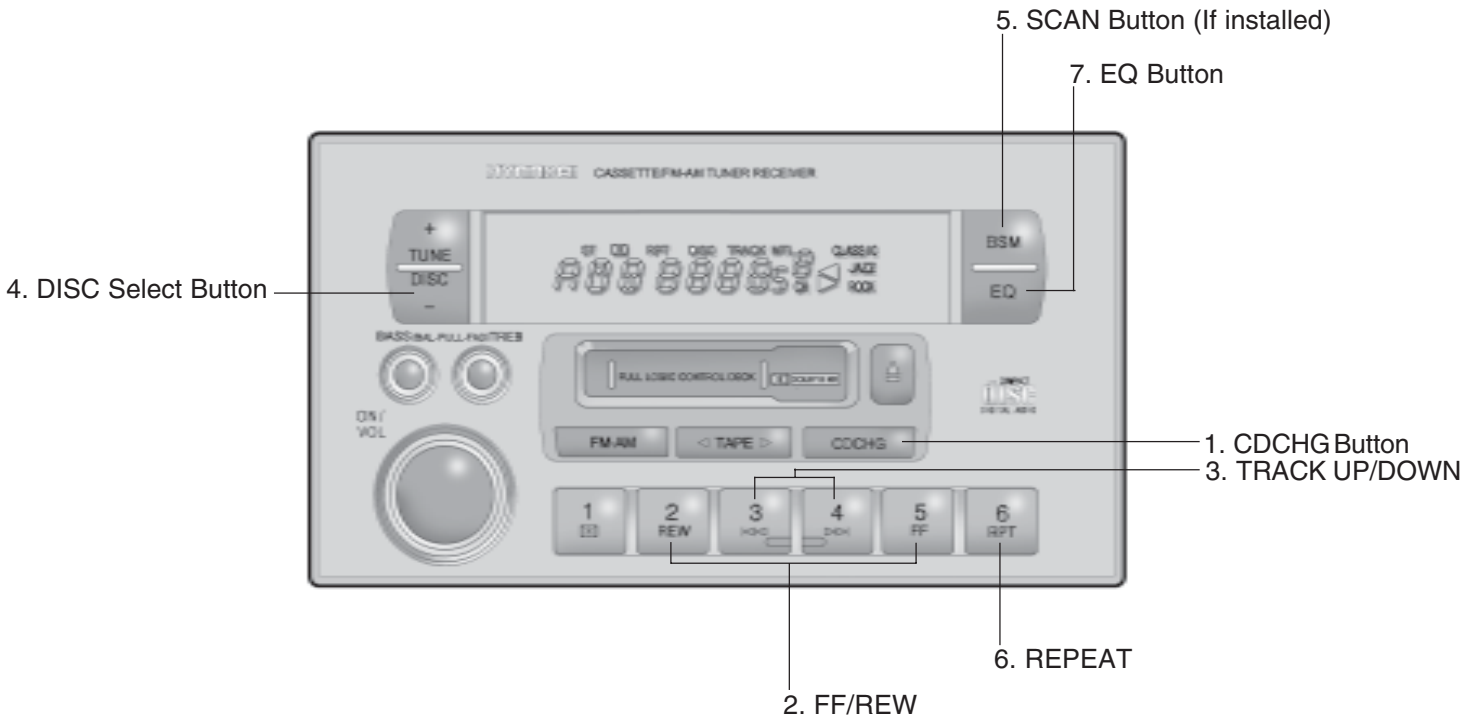

B940A01L

B940F01L-GAT

CD auto changer connected with audio system is located in the left side of the trunk.

o To use the CD auto changer

1. Open the sliding lid of the CD auto changer.
2. To eject the compact disc magazine, press the EJECT button located in the CD auto changer.
3. Insert the discs into the magazine.
4. Push the megazine into the CD auto changer and close the sliding lid.

o The CD auto changer can be used when the ignition switch is in either "ON" or "ACC" position.

1. CDCHG Button

When the CD changer have discs inserted in the magazine, if you press the CDCHG button, the CD changer can be used even if the radio or cassette player is being used. The Hyundai CD changer can hold up to eight discs. The disc number will be lit, and the track number, and elapsed time will be displayed.

2. FF/REW

While the disc is playing, if you hold down the FF button continuously, the track number is increased and vice versa.

3. TRACK UP/DOWN

o The desired track on the disc currently being played can be selected using the track number.
o Press ▶▶once to skip forward to the beginning of the next track.
o Press ◀◀ once to skip back to the beginning of the track.

4. DISC Select Button

To select the CD you want, push "DISC +" or "DISC-" to change the disc number.

5. SCAN (If installed)

o Press the SCAN button to playback the first 10 seconds of each track.
o Press the SCAN button again within 10 seconds for the desired track.

6. REPEAT

o To repeat the music you are listening to, press the RPT button. To cancel , press again.
o If you do not release RPT operation after all the tracks are played back, the unit will play back again from the first track.

7. EQ Button

Press the EQ button to select the CLASSIC, JAZZ, ROCK and DEFEAT MODE for the desired tone quality. Each press of the button changes the display as follows;

CLASSIC → JAZZ → ROCK → DEFEAT

NOTE:

- **To assure proper operation of the unit, keep the vehicle interior temperature within a normal range by using the vehicle's air conditioning or heating system.**
- **When replacing the fuse, replace it with a fuse having the correct capacity.**
- **This equipment is designed to be used only in a 12 volt DC battery system with negative ground.**
- **This unit is made of precision parts. Do not attempt to disassemble or adjust any parts.**
- **When driving your vehicle, be sure to keep the volume of the unit set low enough to allow you to hear sounds coming from the outside.**

B940G01L-GAT

STEREO RADIO OPERATION (H940A) (If installed)

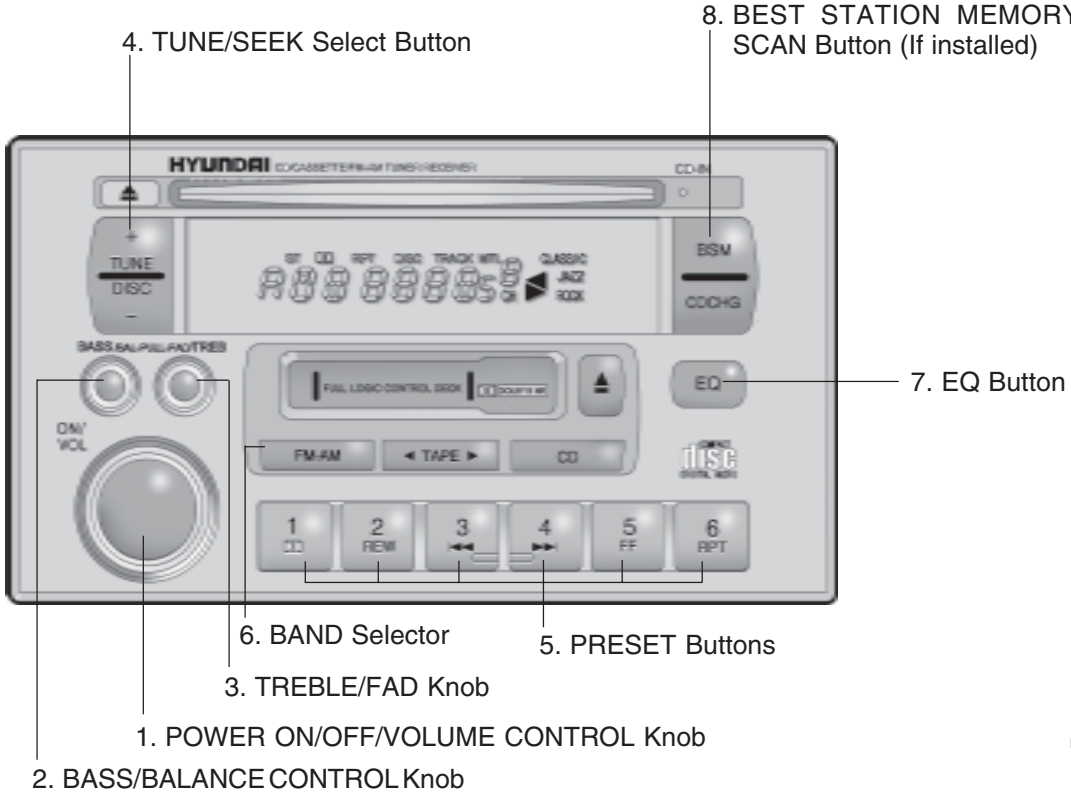

B940G01L

B940H02L-GAT

1. POWER ON-OFF/VOLUME CONTROL KNOB

The radio unit may be operated when the ignition key is in the "ACC" or "ON" position. Press the button to switch the power on. The display shows the radio frequency in the radio mode, the tape direction indicator in the tape mode, or CD track either in the CD mode or CD AUTO CHANGER mode. To switch the power off, press the button again.

VOLUME Control

Rotate the knob clockwise to increase the volume and turn the knob counter-clockwise to reduce the volume.

2. BASS/BALANCE Control

BASS Control Knob

Press to pop the knob out. To increase the bass, rotate the knob clockwise, while to decrease the bass, rotate the knob counterclockwise.

BALANCE Control

Further pull the popped-up knob. Rotate the knob clockwise to emphasize right speaker sound. (Left speaker sound will be attenuated) When the control knob is turned counter clockwise, left speaker sound will be emphasized (Right speaker sound will be attenuated).

3. TREBLE/FAD Knob

TREBLE Control Knob

Press to pop the knob out and turn to the left or right for the desired treble tone.

FAD (Fader Control) Knob

Further pull the popped-up knob. Turn the control knob clockwise to emphasize rear speaker sound. (Front speaker sound will be attenuated) When the control knob is turned counterclockwise, front speaker sound will be emphasized. (Rear speaker sound will be attenuated)

4. TUNE (Manual) Select Button

Press the (+) side or (-) side to increase or to decrease the frequency. With the button held down for 0.5 sec. or more, the frequency selection will increase or decrease rapidly.

SEEK Operation (Automatic Channel Selection)

Press the TUNE select button 1 sec. or more. When the (+) side is pressed, the unit will automatically tune to the next higher frequency and when the (-) side is pressed, it will automatically tune to the next lower frequency.

5. PRESET STATION Select Buttons

Six (6) stations for AM, FM and FM2 respectively can be preset in the electronic memory circuit.

HOW TO PRESET STATIONS

Six AM and twelve FM stations may be programmed into the memory of the radio. Then, by simply pressing the band select button and/or one of the six station select buttons, you may recall any of these stations instantly. To program the stations, follow these steps:

- o Press band selector to set the band for AM, FM and FM2.
- o Select the desired station to be stored by seek, scan or manual tuning.
- o Determine the preset station select button you wish to use to access that station.
- o Press the station select button for more than two seconds. A select button indicator will show in the display indicating which select button you have depressed. The frequency display will flash after it has been stored into the memory. You should then release the button, and proceed to program the next desired station. A total of 18 stations can be programmed by selecting one AM and two FM station per button.
- o When completed, any preset station may be recalled by selecting AM, FM or FM2 band and the appropriate station button.

6. BAND Selector

Pressing the button changes the AM, FM1 and FM2 bands. The mode selected is shown on the display.

7. EQ Button

Press the EQ button to select the CLASSIC, JAZZ, ROCK and DEFEAT MODE for the desired tone quality. Each press of the button changes the display as follows;

CLASSIC → JAZZ → ROCK → DEFEAT

8. Best Station Memory Button (BSM) (If installed)

When the BSM button is pressed for two seconds or longer, the six channels from the highest field intensity are selected next and stored in memory. The stations selected are stored in the sequence frequency from the first preset key.

9. SCAN Button (If installed)

When the scan button is pressed, the frequency will increase and the receivable stations will be tuned in one after another, receiving each station for 5 seconds. To stop scanning, press the scan button again.

B940I01L-GAT

CASSETTE TAPE PLAYER OPERATION (H940A) (If installed)

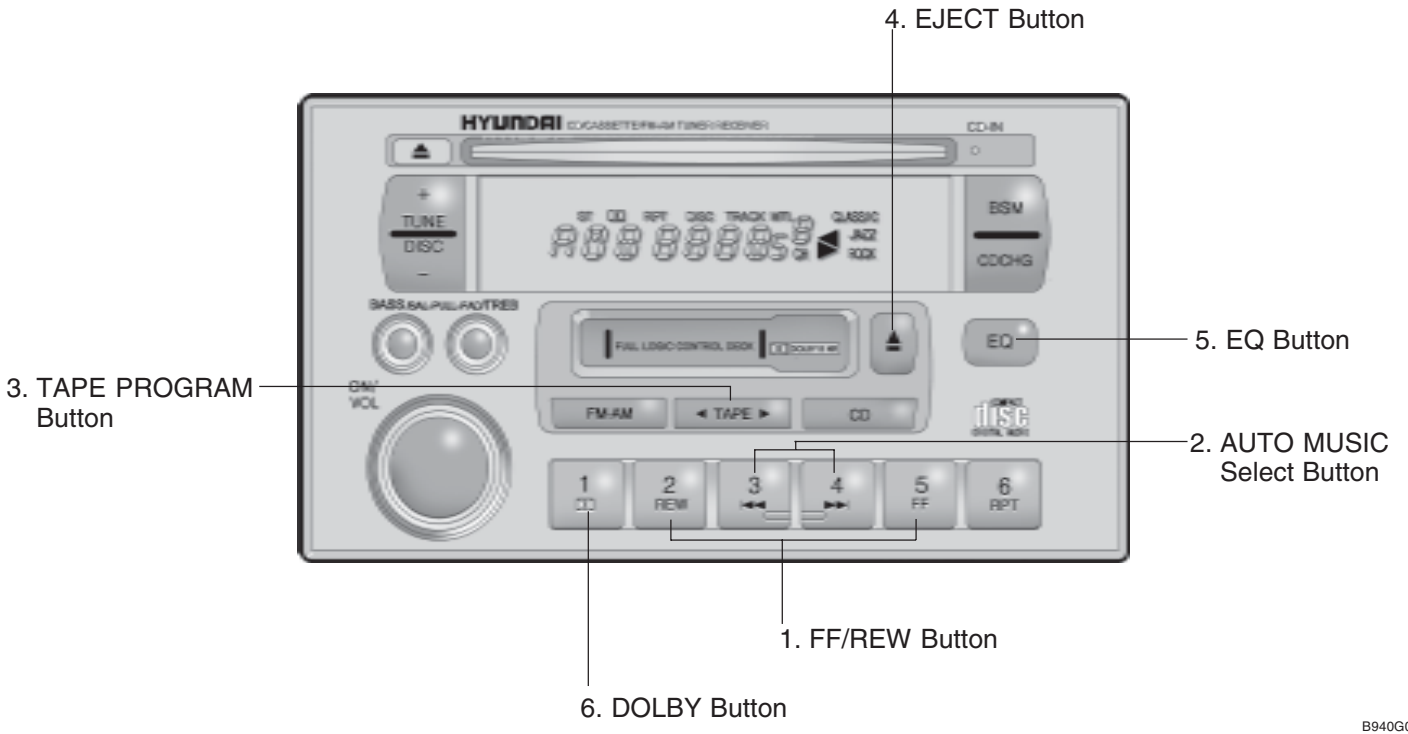

B940G01L

B940J01L-GAT

1. FF/REW Button

- o Fast forward tape winding starts when the FF button is pressed during PLAY or REW mode.
- o PLAY starts when the FF button is pressed again during FF mode.
- o Tape rewinding starts when REW button is pressed during PLAY or FF mode.
- o PLAY starts when REW button pressed again during REW mode.

2. AUTO MUSIC SELECT Button

Press the button to find the starting point of each song in a prerecorded music tape. The quiet space between songs (must have at least a 4 sec. gap) can be accepted by the AUTO MUSIC SELECT button.

- o Pressing the ▶▶ will play the beginning of the next music segment.
- o Pressing the ◀◀ will start replay at the beginning of the music just listened to.
- o To stop FF or REW action, press the button again.

3. TAPE PROGRAM Button

This allows you to play the reverse side of the tape by merely pressing the program button. An arrow will appear in the display to show tape direction.

4. EJECT button

- o When the EJECT button is pressed with a cassette loaded, the cassette will eject.
- o When the EJECT button is pressed during FF/REW mode, the cassette will eject.

5. EQ Button

Press the EQ button to select the CLASSIC, JAZZ, ROCK and DEFEAT MODE for the desired tone quality. Each press of the button changes the display as follows;

CLASSIC → JAZZ → ROCK → DEFEAT

6. DOLBY Button

If you get background noise during tape PLAY, you can reduce this considerably by merely pressing the DOLBY button. If you want to cancel the DOLBY feature, press the button again.

B940K01L-GAT

COMPACT DISC PLAYER OPERATION (H940A) (If installed)

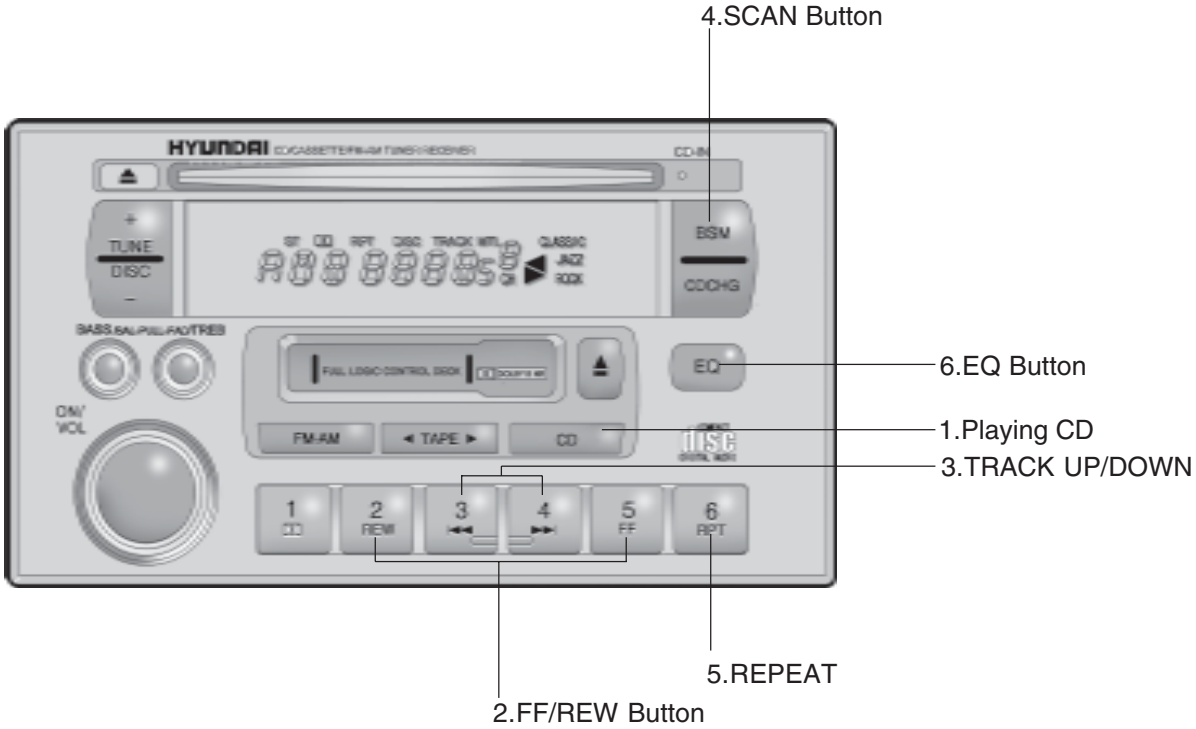

B940G01L

B940L01L-GAT

1. Playing CD

- o Insert the CD with the label facing upward.
- o Insert the CD to start CD playback, during radio operation or cassette tape playing.
- o When a disc is in the CD deck, if you press the play button the CD player will begin playing even if the radio or cassette player is being used.
- o The CD player can be used when the ignition switch is in either the "ON" or "ACC" position.

2. FF/REW

While the disc is playing, if you hold down the FF button continuously, the track number is increased and vice versa.

3. TRACK UP/DOWN

- o The desired track on the disc currently being played can be selected using the track number.
- o Press ▶▶ once to skip forward to the beginning of the next track.
- o Press ◀◀ once to skip back to the beginning of the track.

4. SCAN (If installed)

- o Press the SCAN button to playback the first 10 seconds of each track.
- o Press the SCAN button again within 10 sec. when you have reached the desired track.

5. REPEAT

- o To repeat the track you are currently listening to, press the RPT button. To cancel , press again.
- o If you do not release RPT operation after all the tracks are played back, the unit will play back again from the first track.

6. EQ Button

Press the EQ button to select the CLASSIC, JAZZ, ROCK and DEFEAT MODE for the desired tone quality. Each press of the button changes the display as follows;

CLASSIC → JAZZ → ROCK → DEFEAT

NOTE:

- **o To assure proper operation of the unit, keep the vehicle interior temperature within a normal range by using the vehicle's air conditioning or heating system.**
- **o When replacing the fuse, replace it with a fuse having the correct capacity.**
- **o The preset station frequencies are all erased when the car battery is disconnected. Therefore, all data will have to be set again if this should occur.**
- **o Do not add any oil to the rotating parts. Keep magnets, screwdrivers and other metallic objects away from the tape mechanism and head.**
- **o This equipment is designed to be used only in a 12 volt DC battery system with negative ground.**
- **o This unit is made of precision parts. Do not attempt to disassemble or adjust any parts.**

- **When driving your vehicle, be sure to keep the volume of the unit set low enough to allow you to hear sounds coming from the outside.**
- **Do not expose this equipment (including the speakers and tape) to water or excessive moisture.**

B940M01L-GAT

CD AUTO CHANGER (H940A) (If installed)

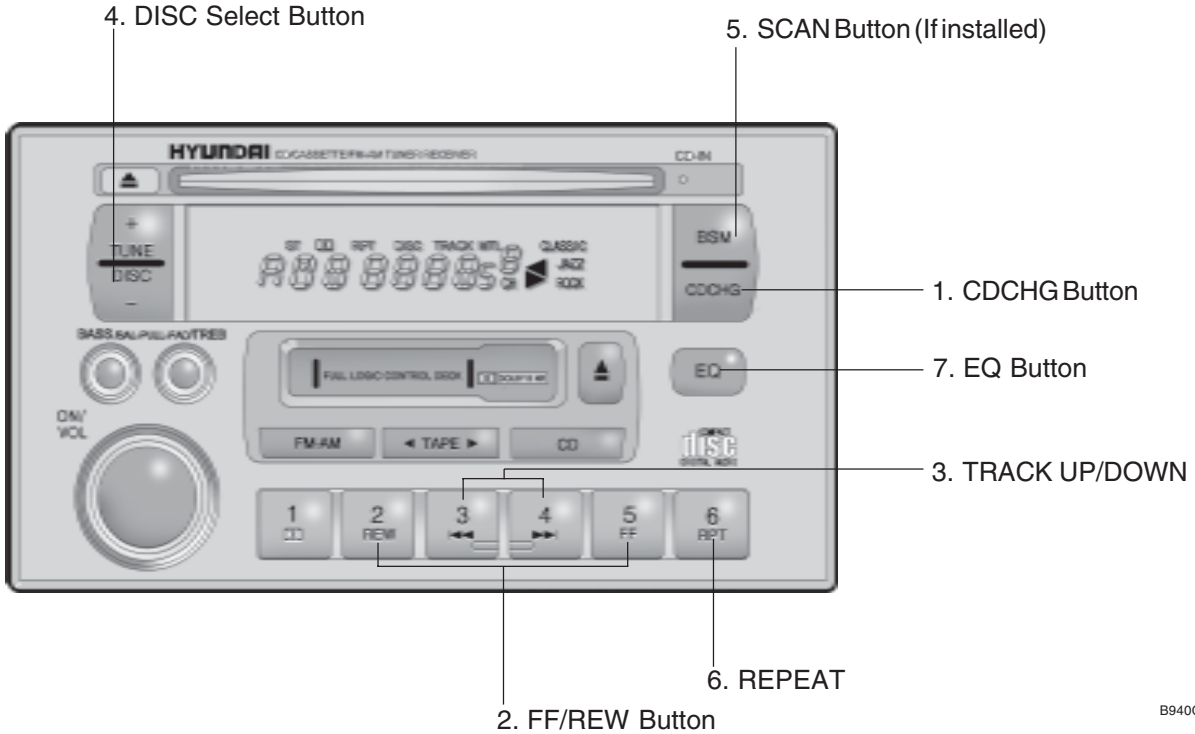

B940G01L

B940N01L-GAT

CD auto changer connected with audio system is located in the left side of trunk.

o To use the CD auto changer

1. Open the sliding lid of the CD auto changer.
2. To eject the compact disc magazine, press the EJECT button located inside the CD auto changer.
3. Insert the discs into the magazine.
4. Push the megazine into the CD auto changer and close the sliding lid.

o The CD auto changer can be used when the ignition switch is in either "ON" or "ACC" position.

1. CDCHG Button

When the CD changer have discs inserted in the magazine, if you press the CDCHG button, the CD changer can be used even if the radio or cassette player is being used. The Hyundai CD changer can hold up to eight discs. The disc number will be lit, and the track number, and elapsed time will be displayed.

2. FF/REW

While the disc is playing, if you hold down the FF button continuously, the track number is increased and vice versa.

3. TRACK UP/DOWN

o The desired track on the disc currently being played can be selected using the track number.
o Press ▶▶ once to skip forward to the beginning of the next track.
o Press ◀◀ once to skip back to the beginning of the track.

4. DISC Select Button

To select the CD you want, push "DISC +" or "DISC -" to change the disc number

5. SCAN (If installed)

o Press the SCAN button to playback the first 10 seconds of each track.
o Press the SCAN button again within 10 sec. for the desired track.

6. REPEAT

o To repeat the music you are listening to, press the RPT button. To cancel , press again.
o If you do not release RPT operation after all the tracks are played back, the unit will play back again from the first track.

7. EQ Button

Press the EQ button to select the CLASSIC, JAZZ, ROCK and DEFEAT MODE for the desired tone quality. Each press of the button changes the display as follows;

CLASSIC → JAZZ → ROCK → DEFEAT

NOTE:

- **To assure proper operation of the unit, keep the vehicle interior temperature within a normal range by using the vehicle's air conditioning or heating system.**
- **When replacing the fuse, replace it with a fuse having the correct capacity.**
- **This equipment is designed to be used only in a 12 volt DC battery system with negative ground.**
- **This unit is made of precision parts. Do not attempt to disassemble or adjust any parts.**
- **When driving your vehicle, be sure to keep the volume of the unit set low enough to allow you to hear sounds coming from the outside.**

B890A01Y-AAT

AUDIO FAULT CODE

If you see any error indication in the display while using the CD or Tape mode, find the cause in the chart below. If you cannot clear the error indication, take the car to your Hyundai dealer.

INDICATION	CAUSE	SOLUTION
Er2	CD DECK MECHANICAL ERROR (EJECT ERROR, LOADING ERROR)	After resetting the audio, push the eject button. If disc is not ejected, consult your hyundai dealer.
Er3	FOCUS ERROR DATA READ ERROR	Make sure the disc is not scratched or damaged. Press the eject button and pull out the disc. Then insert a normal cd disc.
Er6	DISC ERROR	Check if the disc is inserted correctly in the cd player. Make sure the disc is not scratched or damaged.
Er8	TAPE DECK ERROR TAPE EJECT ERROR	After resetting the audio, push the eject button. If tape is not ejected, consult your hyundai dealer.
HHH	TEMPERATURE IS TOO HIGH	Fault code will reset automatically when the temperature returns to normal.
no CD	NO DISC IN MAGAZINE NO CD MAGAZINE IN THE AUTO CHANGER	Insert disc in magazine or insert cd magazine in the auto changer.

B850A01F-AAT

CARE OF DISC

Proper Handling

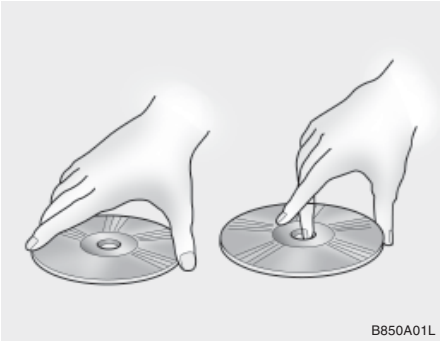

Handle your disc as shown. Do not drop the disc. Hold the disc so you will not leave fingerprints on the surface. If the surface is scratched, it may cause the pickup to skip signal tracks. Do not affix tape, paper, or gummed labels on the disc. Do not write on the disc.

Damaged Disc

Do not attempt to play damaged, warped or cracked discs. These could severely damage the playback mechanism.

Storage

When not in use, place your discs in their individual cases and store them in a cool place away from the sun, heat, and dust.

Do not grip or pull out the disc with your hand while the disc is being pulled into the unit by the self loading mechanism.

Do not pull the unit from the dash immediately after a disc is inserted or the eject switch has been pressed. If the unit is pulled out before an operation is completed, the disc will be unstable in the unit and may be damaged.

Do not attempt to insert a disc into the unit when the unit is out of the dash or the power is off.

Keep Your Discs Clean

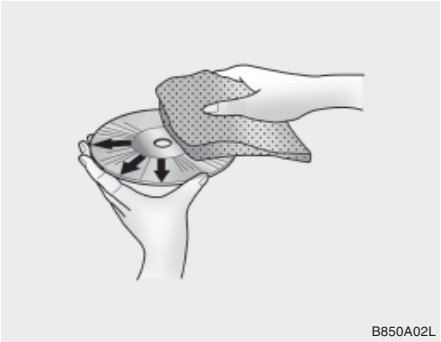

Fingerprints, dust, or soil on the surface of a disc could cause the pickup to skip signal tracks. Wipe the surface clean with a clean soft cloth.

If the surface is heavily soiled, dampen a clean soft cloth in a solution of mild neutral detergent to wipe it clean. See drawing.

B860A01A-AAT

CARE OF CASSETTE TAPES

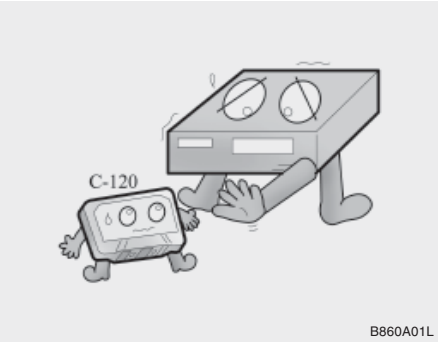

B860A01L

Proper care of your cassette tapes will extend the tape life and increase your listening enjoyment. Always protect your tapes and cassette cases from direct sunlight, severely cold and dusty conditions. When not in use, cassettes should always be stored in the original protective cassette case. When the vehicle is very hot or cold, allow the interior temperature to become more comfortable before listening to your cassettes.

- o Never leave a cassette inserted in the player when not being played. This could damage the tape player unit and the cassette tape.
- o We strongly recommend against the use of tapes longer than C-60 (60 minutes total). Tapes such as C-120 or C-180 are very thin and do not perform as well in the automotive environment.

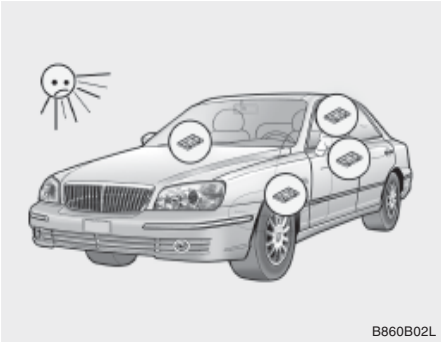
B860B02L

- o Be sure that the cassette label is not loose or peeling off or tape ejection may be difficult.
- o Never touch or soil the actual audio tape surfaces.
- o Keep all magnetized objects, such as electric motors, speakers or transformers away from your cassette tapes and tape player unit.
- o Store cassettes in a cool, dry place with the open side facing down to prevent dust from setting in the cassette body.
- o Avoid repeated fast reverse usage to replay one given tune or tape section. This can cause poor tape winding to occur, and eventually cause excessive internal drag and poor audio quality in the cassette. If this occurs, it can sometimes be corrected by fast winding the tape from end to end several times. If this does not correct the problem, do not continue to use the tape in your vehicle.

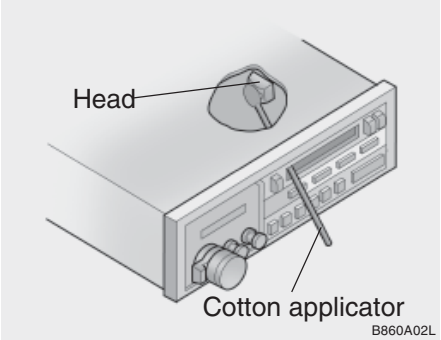

B860A02L

- The playback head, capstan and pinch rollers will develop a coating of tape residue that can result in deterioration of sound quality, such as a wavering sound. They should be cleaned monthly using a commercially available head cleaning tape or special solution available from audio specialty shops. Follow the supplier's directions carefully and never oil any part of the tape player unit.
- Always be sure that the tape is tightly wound on its reel before inserting in the player. Rotate a pencil in the drive sprockets to wind up any slack.

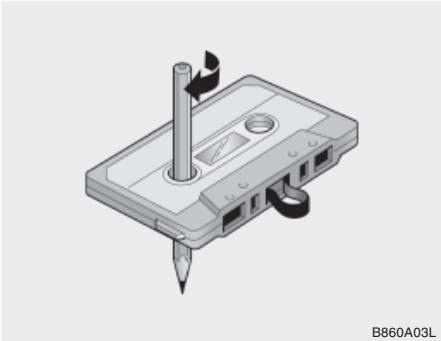
B860A03L

NOTE:

Look at a tape before you insert it.
If the tape is loose, tighten it by turning one of the hubs with a pencil or your finger.
If the label is peeling off, do not put it in the drive mechanism.
Do not leave tapes sitting where they are exposed to hot, warm, or high humidity, such as on top of the dashboard or in the player.
If a tape is exposed to excessively hot or cold, let it reach a moderate temperature before putting it in the player.

B870B01Y-AAT

Power Antenna (If installed)

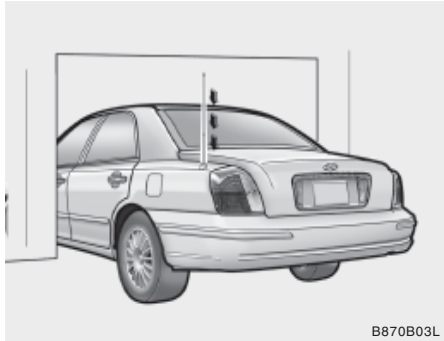
B870B03L

The antenna will automatically be extended when the radio power switch is turned on while the ignition key is in either the "ON" or "ACC" position. The antenna will automatically be retracted and stored when either the radio power switch is turned off or the ignition key is set to the "LOCK" position.

CAUTION:

- **Before turning on the radio, make sure that no one is near the antenna.**
- **Before entering an automatic car wash or a place with a low height clearance, be sure that the antenna is retracted and stored.**
- **If the antenna is dirty, be sure to clean it in order to avoid an operation malfunction.**

B870D02Y-GAT

Glass Antenna (If installed)

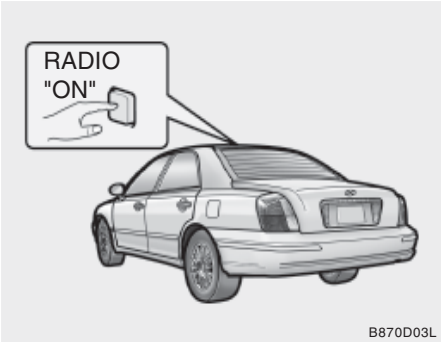

When the radio power switch is turned on while the ignition key is in either the "ON" or "ACC" position, your car will receive both AM and FM broadcast signals through the antenna in the rear window glass.

CAUTION:

- **Do not clean the inner side of the rear window glass with an abrasive type of glass cleaner or use a scraper to remove the foreign deposits from the inner surface of the glass as this may cause damage to the antenna elements.**
- **Avoid adding metalic coating such as Ni, Cd, and so on. These can disturb receiving AM and FM broadcast signals.**

2. DRIVING YOUR HYUNDAI

Before Starting the Engine 2-3
Key Positions 2-3
Starting 2-4
Operating the Manual Transaxle 2-5
Automatic Transaxle 2-7
Anti-Lock Brake System (ABS) 2-11
Traction Control System (TCS) 2-12
Good Braking Practices 2-13
Driving for Economy 2-14
Winter Driving 2-15
Trailer or Vehicle Towing 2-18

C010A01A-AAT

WARNING: ENGINE EXHAUST CAN BE DANGEROUS!

Engine exhaust fumes can be extremely dangerous. If, at any time, you smell exhaust fumes inside the vehicle, open the windows immediately.

o Do not inhale exhaust fumes.
Exhaust fumes contain carbon monoxide, a colorless, odorless gas that can cause unconsciousness and death by asphyxiation.

o Be sure the exhaust system does not leak.
The exhaust system should be checked whenever the vehicle is raised to change the oil or for any other purpose. If you hear a change in the sound of the exhaust or if you drive over something that strikes the underneath side of the car, have the exhaust system checked as soon as possible by your Hyundai dealer.

o Do not run the engine in an enclosed area.
Letting the engine idle in your garage, even with the garage door open, is a hazardous practice. Never run the engine in your garage any longer than it takes to start the engine and back the car out.

o Avoid idling the engine for prolonged periods with people inside the car.
If it is necessary to idle the engine for a prolonged period with people inside the car, be sure to do so only in an open area with the air intake set at "Fresh" and the fan operating at one of the higher speeds so fresh air is drawn into the interior.

If you must drive with the trunk open because you are carrying objects that make this necessary:

1. Close all windows.
2. Open side vents.
3. Set the air intake control at "Fresh", the air flow control at "Floor" or "Face" and the fan at one of the higher speeds.

To assure proper operation of the ventilation system, be sure the ventilation air intakes located just in front of the windshield are kept clear of snow, ice, leaves or other obstructions.

C020A01A-AAT

BEFORE STARTING THE ENGINE

Before you start the engine, you should always:

1. Look around the vehicle to be sure there are no flat tires, puddles of oil, water or other indications of possible trouble.
2. After entering the car, check to be sure the parking brake is engaged.
3. Check that all windows, and lights are clean.
4. Check that the interior and exterior mirrors are clean and in position.
5. Check your seat, seatback and headrest to be sure they are in their proper positions.
6. Lock all the doors.
7. Fasten your seat belt and be sure that all other occupants have fastened theirs.
8. Turn off all lights and accessories that are not needed.
9. When you turn the ignition switch to "ON", check that all appropriate warning lights are operating and that you have sufficient fuel.
10. Check the operation of warning lights and all bulbs when key is in the "ON" position.

C030A01A-GAT

COMBINATION IGNITION SWITCH

To Start the Engine

- o If your Hyundai is equipped with a manual transaxle, place the shift lever in neutral and depress the clutch pedal fully.
- o If your Hyundai has an automatic transaxle, place the shift lever in "P" (park).
- o To start the engine, insert the ignition key and turn it to the "START" position. Release it as soon as the engine starts. Do not hold the key in the "START" position for more than 15 seconds.

NOTE:

For safety, the engine will not start if the shift lever is not in "P" or "N" Position (Automatic transaxle).

C040A01A-AAT

KEY POSITIONS

WARNING:

The engine should not be turned off or the key removed from the ignition key cylinder while the vehicle is in motion. The steering wheel is locked by removing the key.

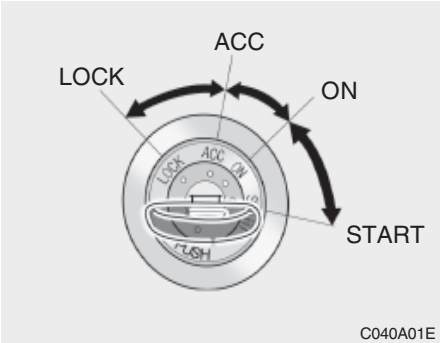

C040A01E

o "START"
The engine is started in this position. It will crank until you release the key.

NOTE:
Do not hold the key in the "START" position for more than 15 seconds.

o "ON"
When the key is in the "ON" position, the ignition is on and all accessories may be turned on. If the engine is not running, the key should not be left in the "ON" position. This will discharge the battery and may also damage the ignition system.

o "ACC"
With the key in the "ACC" position, some electrical accessories (radio, etc.) may be operated.

o "LOCK"
The key can be removed or inserted in this position.
To protect against theft, the steering wheel locks by removing the key.

NOTE:
To unlocking the steering wheel, insert the key, and then turn the steering wheel and key simultaneously.

C070C01A-AAT
To Remove The Ignition Key

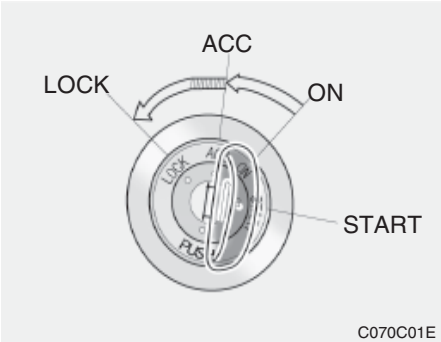

C070C01E

1. Turn the ignition key to the "ACC" position.
2. Simultaneously push and turn the ignition key counterclockwise from the "ACC" position to the "LOCK" position.
3. The key can be removed in the "LOCK" position.

C050A01A-AAT
STARTING

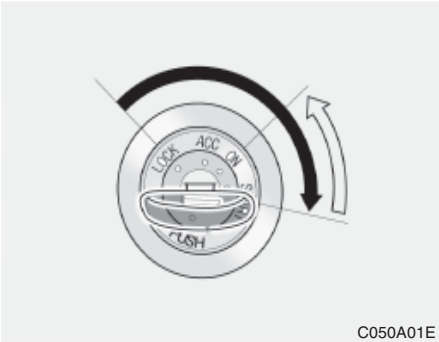

C050A01E

WARNING:
Never run the engine in a closed or poorly ventilated area any longer than is needed to move your car in or out of the area. The carbon monoxide gas emitted is odorless and can cause serious injury or death.

C050B01A-GAT

Normal Conditions:
The Starting Procedure:

1. Insert key, and fasten the seat belt.
2. Depress the clutch pedal fully and place the gearshift lever (manual transaxle) in neutral or the selector lever (automatic transaxle) in "P" (park) position.
3. After turning the ignition key to the "ON" position, make certain all warning lights and gauges are functioning properly before starting the engine.

WARNING:

Be sure that the clutch is fully depressed when starting a manual transaxle vehicle. Otherwise, there is the potential to cause damage to the vehicle or injury to someone inside or outside the vehicle as a result of the forward or backward movement of the vehicle that will occur if the clutch is not depressed when the vehicle is started.

4. Turn the ignition key to the "Start" position and release it when the engine starts.

C070A02A-AAT

OPERATING THE MANUAL TRANSAXLE

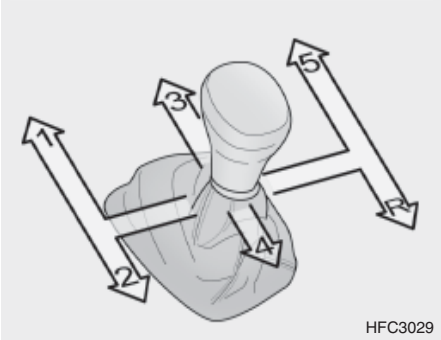

HFC3029

Your Hyundai's manual transaxle has a conventional shift pattern. This shift pattern is imprinted on the shift knob. The transaxle is fully synchronized in all forward gears so shifting to either a higher or a lower gear is easily accomplished.

NOTE:

- **To shift into reverse, rest the lever in neutral for at least 3 seconds after your car is completely stopped. Then move the lever into the reverse position.**
- **During cold weather, shifting may be difficult until the transaxle lubricant has warmed up. This is normal and not harmful to the transaxle.**
- **If you 've come to a complete stop and it's hard to shift into 1st or R(Reverse), put the shift lever in N(Neutral) position and release the clutch. Press the clutch pedal back down, and then shift into 1st or R(Reverse) gear position.**
- **Do not use the shift lever as a handrest during driving, as this can result in premature wear of the transaxle shift forks.**

CAUTION:

When downshifting from fifth gear to fourth gear, caution should be taken not to inadvertently press the gear lever sideways in such a manner that second gear is engaged. Such a drastic downshift may cause the engine speed to increase to the point that the tachometer will enter the red-zone. Such over-revving of the engine may possibly cause engine damage.

C070B01A-AAT

Using the Clutch

The clutch should be pressed all the way to the floor before shifting, then released slowly. The clutch pedal should always be used after fully returning to the original position. Do not rest your foot on the clutch pedal while driving. This can cause unnecessary wear. Do not partially engage the clutch to hold the car on an incline. This causes unnecessary wear. Use the parking brake to hold the car on an incline. Do not operate the clutch pedal rapidly and repeatedly.

C070E03A-GAT

RECOMMENDED SHIFT POINTS

Shift from-to	Recommended
1-2	20 km/h (15 mph)
2-3	40 km/h (25 mph)
3-4	55 km/h (35 mph)
4-5	75 km/h (45 mph)

The shift points as shown above are recommended for optimum fuel economy and performance.

C070D02A-AAT

Good Driving Practices

- Never take the car out of gear and coast down a hill. This is extremely hazardous. Always leave the car in gear.
- Don't "ride" the brakes. This can cause them to overheat and malfunction. Instead, when you are driving down a long hill, slow down and shift to a lower gear. When you do this, engine braking will help slow the car.
- Slow down before shifting to a lower gear. This will help avoid over-revving the engine, which can cause damage.
- Slow down when you encounter cross winds. This gives you much better control of your car.
- Be sure the car is completely stopped before you attempt to shift into reverse. The transaxle can be damaged if you do not. To shift into reverse, depress the clutch, move the shift lever to neutral, wait three seconds, then shift to the reverse position.

o Exercise extreme caution when driving on a slippery surface. Be especially careful when braking, accelerating or shifting gears. On a slippery surface, an abrupt change in vehicle speed can cause the drive wheels to lose traction and the vehicle to go out of control.

WARNING:

- **The risk of rollover is greatly increased if you lose control of your vehicle at highway speeds.**
- **Loss of control often occurs if two or more wheels drop off the roadway and the driver oversteers to reenter the roadway.**
- **In the event your vehicle leaves the roadway, do not steer sharply. Instead, slow down before pulling back into the travel lanes.**
- **In a collision crash, an unbelted person is significantly more likely to die than a person wearing a seatbelt.**

C090A01L-GAT

AUTOMATIC TRANSAXLE (4A/T, 5A/T)

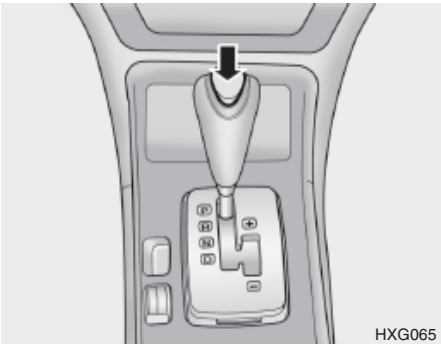

The highly efficient Hyundai automatic transaxle has four/five forward speeds and one reverse speed. The individual speeds are selected automatically, depending on the position of the speed selector lever. The selector lever has 2 gates; the main gate and the manual gate.

NOTE:

For information on manual gate operation, refer to "Sports Mode".

In the main gate, selector lever has 4/5 positions, and is equipped with a button to avoid inadvertent wrong selection.

NOTE:

- **Depress the brake pedal and push the button when shifting.**
- **Push the button when shifting.**
- **The selector lever can be shifted freely.**

The first few shifts on a new vehicle, or if the battery has been taken away and reinstalled, may be somewhat abrupt. This is a normal condition, and the shifting sequence will become normal after shifts are cycled a few times by T.C.M (Transaxle Control Module).

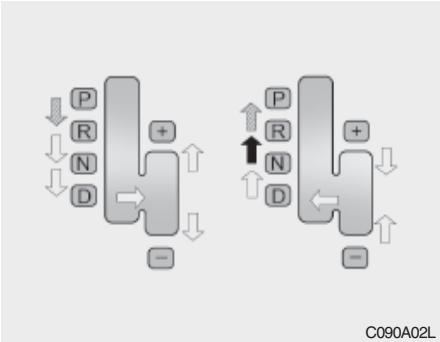

C090A02L

CAUTION:
Never shift into "R" or "P" position while the vehicle is moving.

The indicator lights in the instrument cluster are for indicating the selector lever position when the ignition is switched "ON". During "D" range operation, green lights indicate the gear currently in use.

C090B01A-AAT

The Function of Each Position Is As Follows:

o P (Park):

Use to hold the vehicle in place when parking or while starting the engine; shift the selector lever to the "P" (Park) position. Whenever parking the car, apply the parking brake and shift the selector lever to the "P" (Park) position.

CAUTION:
Never place the selector lever in the "P" (Park) position unless the vehicle is fully stopped. Failure to observe this caution will cause severe damage to the transaxle.

C090C01A-AAT

o R(Reverse):

Use for backing up the vehicle. Bring the car to a complete stop before shifting the selector lever to "R" position.

C090D02A-AAT

o N (Neutral):

In the "N" position, the transaxle is in neutral, which means that no gears are engaged. The engine can be started with the shift lever in "N" position, although this is not recommended except if the engine stalls while the car is moving.

C090E01L-GAT

o D (Drive):

Use for normal driving. This position is used for most city and highway driving, for starting from a full stop to maximum speed. The transaxle will automatically shift through a four/five gear sequency, giving best economy and power.

C090F01L-GAT

Sports mode

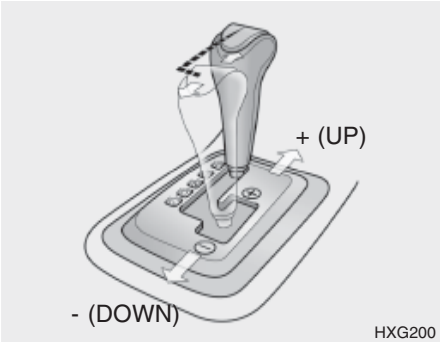

Whether the vehicle is stationary or in motion, sports mode is selected by pushing the selector lever from the "D" position into the manual gate. To return to "D" range operation, push the selector lever back into the main gate. In sports mode, moving the selector lever backwards and forwards can make gearshifts rapidly simply. In contrast to a manual transaxle, the sports mode allows gearshifts with the acceleator pedal depressed.

UP (+) : Push the lever forward once to shift up one gear.

DOWN (-) : Pull the lever backwards once to shift down one gear.

SKIP : By rapidly moving the selector forward or backward twice, it is possible to skip one gear, i.e. 1st to 3rd or 3rd to 1st .

CAUTION:

- **Upward shifts do not take place automatically in sports mode. The driver must execute upward shifts in accordance with prevailing road conditions, taking care to keep the engine speed below the red zone.**
- **By rapidly moving the selector lever backwards (-) twice, it is possible to skip one gear, i.e., 3rd to 1st, 4th to 2nd or 5th to 3rd. Since sudden engine braking and/or rapid acceleration can cause a loss of traction, however, downshifts must be made carefully in accordance with the vehicle's speed.**

NOTE:

- **In sports mode, only the four/five forward gears can be selected. To reverse or park the vehicle, move the selector lever to the "R" or "P" position as required.**
- **In sports mode, downward shifts are made automatically when the vehicle slows down. When the vehicle stops, 1st gear is automatically selected.**
- **To maintain the required levels of vehicle performance and safety, the system may not execute certain gearshifts when the selector lever is operated.**
- **When driving away on a slippery road, push the selector lever toward into the +(UP) position. This cause the transaxle to shift into the 2nd gear which is better for smooth driving away on a slippery road. Push the selector lever to the -(DOWN) side to shift back to the 1st gear.**

C090H01L-GAT

NOTE:

- **For smooth and safe operation, depress the brake pedal when shifting from "Neutral" position or "Park" position to a forward or reverse gear.**
- **The ignition key must be in the "ON" position and the brake pedal fully depressed in order to move the shift lever from the "P" (Park) position to any of the other positions.**
- **It is always possible to shift from "R", "N", "D" position to "P" position. The vehicle must be fully stopped to avoid transaxle damage.**

C090I01L-GAT

CAUTION:

- **Shift into "R" and "P" position only when the vehicle has completely stopped.**
- **Do not accelerate the engine in reverse or any of the forward positions with the brakes applied.**
- **Always apply the footbrake when shifting from "P" or "N", to "R" or "D" position.**
- **Do not use the "P" (Park) position in place of the parking brake. Always set the parking brake, shift the transaxle into "P" (Park) position and turn off the ignition when you leave the vehicle, even momentarily. Never leave the vehicle unattended while the engine is running.**
- **Check the automatic transaxle fluid level regularly, and add fluid as necessary.**
- **See the maintenance schedule for the proper fluid recomendation.**

C090N01Y-AAT

Good Driving Practices

- Never move the gear selector lever from "P" or "N" to any other position with the accelerator pedal depressed.
- Never move the gear selector lever into "P" when the vehicle is in motion.
- Be sure the car is completely stopped before you attempt to shift into "R".
- Never take the car out of gear and coast down a hill. This may be extremely hazardous. Always leave the car in gear when moving.
- Do not "ride" the brakes. This can cause them to overheat and malfunction. Instead, when you are driving down a long hill, slow down and shift to a lower gear. When you do this, engine braking will help slow the car.
- Slow down before shifting to a lower gear. Otherwise, the lower gear may not be engaged.
- Always use the parking brake. Do not depend on placing the transaxle in "P" to keep the car from moving.

- Exercise extreme caution when driving on a slippery surface. Be especially careful when braking, accelerating or shifting gears. On a slippery surface, an abrupt change in vehicle speed can cause the drive wheels to lose traction and the vehicle to go out of control.

CAUTION:

- **The risk of rollover is greatly increased if you lose control of your vehicle at highway speeds.**
- **Loss of control often occurs if two or more wheels drop off the roadway and the driver oversteers to reenter the roadway.**
- **In the event your vehicle leaves the roadway, do not steer sharply. Instead, slow down before pulling back into the travel lanes.**
- **In a collision crash, an unbelted person is significantly more likely to die than a person wearing a seatbelt.**

C120A02A-AAT

ANTI-LOCK BRAKE SYSTEM (If installed)

The Anti-Lock Brake System (ABS) is designed to prevent wheel lock-up during sudden braking or on hazardous road surfaces. The ABS control module monitors the wheel speed and controls the pressure applied to each brake. Thus, in emergency situations or on slick roads, ABS will increase vehicle control during braking.

NOTE:

During ABS operation, a slight pulsation may be felt in the brake pedal when the brakes are applied. Also, a noise may be heard in the engine compartment while driving. These conditions are normal and indicate that the anti-lock brake system is functioning properly.

WARNING:

ABS will not prevent accidents due to improper or dangerous driving maneuvers. Even though vehicle control is improved during emergency braking, always maintain a safe distance between you and objects ahead. Vehicle speeds should always be reduced during extreme road conditions.
The braking distance for cars equipped with an anti-lock braking system may be longer than for those without it in the following road conditions.

- **Driving on rough, gravel or snow-covered roads.**
- **Driving with tire chains installed.**
- **Driving on roads where the road surface is pitted or has different surface height.**

During these conditions the vehicle should be driven at reduced speeds. The safety features of an ABS equipped vehicle should not be tested by high speed driving or cornering. This could endanger the safety of yourself or others.

C300A02Y-GAT

TRACTION CONTROL SYSTEM (TCS)(If installed)

Left-Hand Drive

Right-Hand Drive

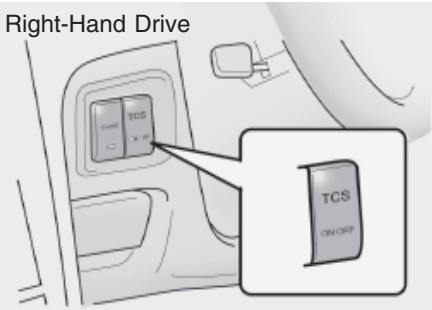

C300A01L-DAG

On slippery road surfaces, the traction control system (TCS) limits the drive wheels from spinning excessively, thus helping the car to accelerate. It also provides sufficient driving force and steering performance as the car turns at accelerated speeds.

SLIP Control

Limits the drive wheels from spinning excessively during starting or while making accelerated turns on slippery roads to avoid losing the driving force of the front wheels.

Driving hints

TCS does not actively apply brakes. Be sure to decelerate the car sufficiently before entering curves.

CAUTION:
When the TCS indicator blinks, SLIP control function has been activated. It also means that the road is slippery or your car is accelerating excessively. In this situation, release foot pressure from the accelerator pedal and maintain moderate speed.

WARNING:
Traction control is a driving aid; all normal precautions for driving in inclement weather and on slippery driving surfaces should be observed.

C300B01L-GAT

TCS ON/OFF Mode

In the TCS ON mode, the indicator in the instrument cluster will not be illuminated.
To switch the TCS OFF mode, press the TCS switch . The SLIP control will be deactivated and the TCS indicator in the instrument cluster will be illuminated.

NOTE:

1) **Stop the engine once. Then restart the engine, and the TCS mode will automatically turn ON.**
2) **When the traction control is operating properly, you can feel a slight pulsation in the vehicle. This is only the effect of brake control and indicates nothing unusual.**

3) When the engine starts, a click is heard from the engine compartment; however, this is only the sound of traction control being checked.
4) When moving out of the mud or fresh snow, pressing the accelerator pedal may not cause the engine speed to increase.

C300D02L-GAT
Indicator and Warning

The indicator should illuminate when the ignition key is turned ON or START but should go out after three seconds. If the indicators do not illuminate or go out after three seconds, have them checked by an authorized dealer.

Should there be any unusual conditions in the device, TCS illuminates as a warning.
If TCS illuminates, pull your car to a safe place and stop the engine.
Then, start the engine again to check if the TCS indicator goes out.

If the indicator do not go out after three seconds even after the engine has been started, have your car checked by an authorized Hyundai dealer.

NOTE:
1) When TCS illuminates, traction control is automatically deactivated for safety.
2) This warning function is not provided when in the TCS-OFF mode.

C130A01A-AAT
GOOD BRAKING PRACTICES

WARNING:
Nothing should be carried on top of the cargo area cover behind the rear seat. If there were an accident or a sudden stop, such objects could move forward and cause damage to the vehicle or injure the occupants.

- o After being parked, check to be sure the parking brake is not engaged and that the parking brake indicator light is out before driving away.
- o Driving through water may get the brakes wet. They can also get wet when the car is washed. Wet brakes can be dangerous! Your car will not stop as quickly if the brakes are wet. Wet brakes cause the car to pull to one side. To dry the brakes, apply the brakes lightly until the braking action returns to normal, taking care to keep the car under control at all times. If the braking action does not return to normal, stop as soon as it is safe to do so and call your Hyundai dealer for assistance.
- o Don't coast down hills with the car out of gear. This is extremely hazardous. Keep the car in gear at all times, use the brakes to slow down, then shift to a lower gear so that engine braking will help you maintain a safe speed.
- o Don't "ride" the brake pedal. Resting your foot on the brake pedal while driving can be dangerous because it can result in the brakes overheating and losing their effectiveness. It also increases the wear of the brake components.
- o If a tire goes flat while you are driving, apply the brakes gently and keep the car pointed straight ahead while you slow down. When you are moving slowly enough for it to be safe to do so, pull off the road and stop in a safe place.

- o If your car is equipped with an automatic transaxle, don't let your car creep forward. To avoid creeping forward, keep your foot on the brake pedal when the car is stopped.
- o Use caution when parking on a hill. Engage the parking brake and place the gear selector lever in "P" (automatic transaxle) or in first or reverse gear (manual transaxle). If your car is facing downhill, turn the front wheels into the curb to help keep the car from rolling. If your car is facing uphill, turn the front wheels away from the curb to help keep the car from rolling.
  If there is no curb or if it is required by other conditions to keep the car from rolling, block the wheels.
- o Under some conditions your parking brake can freeze in the engaged position. This is most likely to happen when there is an accumulation of snow or ice around or near the rear brakes or if the brakes are wet. If there is a risk that the parking brake may freeze, apply it only temporarily while you put the gear selector lever in "P" (automatic) or in first or reverse gear (manual transaxle) and block the rear wheels so the car cannot roll. Then release the parking brake.
- o Do not hold the vehicle on the upgrade with the accelerator pedal. This can cause the transaxle to overheat. Always use the brake pedal or parking brake.

C140A01A-AAT

DRIVING FOR ECONOMY

You can save fuel and get more miles from your car if you follow these suggestions:

- o Drive smoothly. Accelerate at a moderate rate. Don't make "jackrabbit" starts or full-throttle shifts and maintain a steady cruising speed. Don't race between stoplights. Try to adjust your speed to that of the other traffic so you don't have to change speeds unnecessarily. Avoid heavy traffic whenever possible. Always maintain a safe distance from other vehicles so you can avoid unnecessary braking. This also reduces brake wear.
- o Drive at a moderate speed. The faster you drive, the more fuel your car uses. Driving at a moderate speed, especially on the highway, is one of the most effective ways to reduce fuel consumption.
- o Don't "ride" the brake or clutch pedal. This can increase fuel consumption and also increase wear on these components. In addition, driving with your foot resting on the brake pedal may cause the brakes to overheat, which reduces their effectiveness and may lead to more serious consequences.
- o Take care of your tires. Keep them inflated to the recommended pressure. Incorrect inflation, either too much or too little, results in unnecessary tire wear. Check the tire pressures at least once a month.
- o Be sure that the wheels are aligned correctly. Improper alignment can result from hitting curbs or driving too fast over irregular surfaces. Poor alignment causes faster tire wear and may also result in other problems as well as greater fuel consumption.

- o Keep your car in good condition. For better fuel economy and reduced maintenance costs, maintain your car in accordance with the maintenance schedule in Section 5. If you drive your car in severe conditions, more frequent maintenance is required (see Section 5 for details).
- o Keep your car clean. For maximum service, your Hyundai should be kept clean and free of corrosive materials. It is especially important that mud, dirt, ice, etc. not be allowed to accumulate on the underside of the car. This extra weight can result in increased fuel consumption and also contribute to corrosion.
- o Travel lightly. Don't carry unnecessary weight in your car. Weight reduces fuel economy.
- o Don't let the engine idle longer than necessary. If you are waiting (and not in traffic), turn off your engine and restart only when you're ready to go.
- o Remember, your Hyundai does not require extended warm-up. As soon as the engine is running smoothly, you can drive away. In very cold weather, however, give your engine a slightly longer warm-up period.
- o Don't "lug" or "over-rev" the engine. Lugging is driving too slowly in too high a gear resulting in the engine bucking. If this happens, shift to a lower gear. Over-revving is racing the engine beyond its safe limit. This can be avoided by shifting at the recommended speeds.
- o Use your air conditioning sparingly. The air conditioning system is operated by engine power so your fuel economy is reduced when you use it.

C150A01A-AAT

SMOOTH CORNERING

Avoid braking or gear changing in corners, especially when roads are wet. Ideally, corners should always be taken under gentle acceleration. If you follow these suggestions, tire wear will be held to a minimum.

C160A01A-AAT

WINTER DRIVING

The more severe weather conditions of winter result in greater wear and other problems. To minimize the problems of winter driving, you should follow these suggestions:

C160B01A-GAT

Snowy or Icy Conditions

To drive your vehicle in deep snow, it may be necessary to use snow tires or to install tire chains on your tires. If snow tires are needed, it is necessary to select tires equivalent in size and type of the original equipment tires. Failure to do so may adversely affect the safety and handling of your car. Furthermore, speeding, rapid acceleration, sudden brake applications, and sharp turns are potentially very hazardous practices.

During deceleration, use engine braking to the fullest extent. Sudden brake applications on snowy or icy roads may cause skids to occur. You need to keep sufficient distance between the vehicle in front and your vehicle. Also, apply the brake gently. It should be

noted that installing tire chains on the tire will provide a greater driving force, but will not prevent side skids.

NOTE:
Tire chains are not legal in all provinces. Check province laws before fitting tire chains.

C160C01A-AAT
Use High Quality Ethylene Glycol Coolant

Your Hyundai is delivered with high quality ethylene glycol coolant in the cooling system. It is the only type of coolant that should be used because it helps prevent corrosion in the cooling system, lubricates the water pump and prevents freezing. Be sure to replace or replenish your coolant in accordance with the maintenance schedule in Section 5. Before winter, have your coolant tested to assure that its freezing point is sufficient for the temperatures anticipated during the winter.

C160D01A-AAT
Check Battery and Cables

Winter puts additional burdens on the battery system. Visually inspect the battery and cables as described in Section 6. The level of charge in your battery can be checked by your Hyundai dealer or a service station.

C160E01A-AAT
Change to "Winter Weight" Oil if Necessary

In some climates it is recommended that a lower viscosity "winter weight" oil be used during cold weather. See Section 9 for recommendations. If you aren't sure what weight oil you should use, consult your Hyundai dealer.

C160F01A-AAT
Check Spark Plugs and Ignition System

Inspect your spark plugs as described in Section 6 and replace them if necessary. Also check all ignition wiring and components to be sure they are not cracked, worn or damaged in any way.

C160G01A-GAT
To Keep Locks from Freezing

To keep the locks from freezing, squirt an approved de-icer fluid or glycerine into the key opening. If a lock is covered with ice, squirt it with an approved de-icing fluid to remove the ice. If the lock is frozen internally, you may be able to thaw it out by using a heated key. Handle the heated key with care to avoid burning your fingers.

NOTE:
The proper temperature for using the immobilizer key is from -40°C to 80°C. If you heat the immobilizer key over 80°C to open the frozen lock, it may cause damage to the transponder in its head.

C160H01A-AAT

Use Approved Anti-Freeze in Window Washer System

To keep the water in the window washer system from freezing, add an approved anti-freeze solution in accordance with instructions on the container. Window washer anti-freeze is available from Hyundai dealers and most auto parts outlets. Do not use engine coolant or other types of anti-freeze as these may damage the finish.

C160I01A-AAT

Don't Let Your Parking Brake Freeze

Under some conditions your parking brake can freeze in the engaged position. This is most likely to happen when there is an accumulation of snow or ice around or near the rear brakes or if the brakes are wet. If there is a risk the parking brake may freeze, apply it only temporarily while you put the gear selector lever in "P" (automatic) or in first or reverse gear (manual transaxle) and block the rear wheels so the car cannot roll. Then release the parking brake.

C160J01A-AAT

Don't Let Ice and Snow Accumulate Underneath

Under some conditions, snow and ice can build up under the fenders and interfere with the steering. When driving in severe winter conditions where this may happen, you should periodically check underneath the car to be sure the movement of the front wheels and the steering components is not obstructed.

C160K01A-AAT

Carry Emergency Equipment

Depending on the severity of the weather where you drive your car, you should carry appropriate emergency equipment. Some of the items you may want to carry include tire chains, tow straps or chains, flashlight, emergency flares, sand, a shovel, jumper cables, a window scraper, gloves, ground cloth, coveralls, a blanket, etc.

C170A01A-AAT

HIGH SPEED MOTORING Pre-Trip Inspections

1. Tires:
Adjust the tire inflation pressures to specification. Low tire inflation pressures will result in overheating and possible failure of the tires.
Avoid using worn or damaged tires which may result in reduced traction or tire failure.

NOTE:

Never exceed the maximum tire inflation pressure shown on the tires.

2. Fuel, engine coolant and engine oil:
High speed travel consumes 1.5 times more fuel than urban motoring. Do not forget to check both engine coolant and engine oil.

3. Drive belt:
A loose or damaged drive belt may result in overheating of the engine.

C180A01A-AAT

USE OF LIGHTS

Check your lights regularly for correct operation and always keep them clean. When driving during the day in conditions of poor visibility, it is helpful to drive with headlights on low beam. This enables you to be seen as well as to see.

C190A01A-GAT

TRAILER OR VEHICLE TOWING

If you are considering towing with your car, you should first check with your Province Department of Motor Vehicles to determine their legal requirements. Since laws vary from province to province the requirements for towing trailers, cars, or other types of vehicles or apparatus may differ. Ask your Hyundai dealer for further details before towing.

CAUTION:

Do not do any towing with your car during its first 2,000 km (1,200 miles) in order to allow the engine to properly break in. Failure to heed this caution may result in serious engine or transaxle damage.

C190B01S-AAT

Trailer Hitches

Select the proper hitch and ball combination, making sure that it's location is compatible with that of the trailer or vehicle being towed.
Use a quality non-equalizing hitch which distributes the tongue load uniformly throughout the chassis.

The hitch should be bolted securely to the car and installed by a qualified technician. DO NOT USE A HITCH DESIGNED FOR TEMPORARY INSTALLATION AND NEVER USE ONE THAT ATTACHES ONLY TO THE BUMPER.

C190C01Y-GAT

Trailer Brakes

If your trailer is equipped with a braking system, make sure it conforms to federal and/or local regulations and that it is properly installed and operating correctly.

NOTE:

If you tow a trailer or vehicle, your car will require more frequent maintenance due to the additional load. See "Maintenance Under Severe Usage Conditions" on page 5-6.

CAUTION:

- **Never connect a trailer brake system directly to the vehicle brake system.**
- **When towing a trailer on steep grades (in excess of 12%) pay close attention to the engine coolant temperature gauge to ensure the engine does not overheat. If the needle of the coolant temperature gauge moves across the dial towards "H" (HOT), pull over and stop as soon as it is safe to**

do so, and allow the engine to idle until it cools down. You may proceed once the engine has cooled sufficiently.

C190D01A-GAT

Safety Chains

Should the hitch connection between your car and the trailer or vehicle you are towing fail, the trailer or vehicle could wander dangerously across other lanes of traffic and ultimately collide with another vehicle. To eliminate this potentially dangerous situation, safety chains, attached between your car and the trailer or towed vehicle, are required in most provinces.

C190E03L-GAT

Trailer Weight Limit

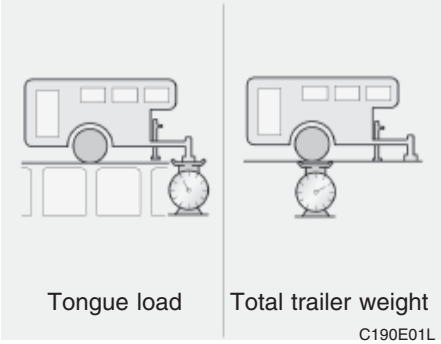

Tongue loads can be increased or decreased by redistributing the load in the trailer.
This can be verified by checking the total weight of the loaded trailer and then checking the load on the tongue.

NOTE:

1. **Never load the trailer with more weight in the back than in the front. About 60% of the trailer load should be in the front half on the trailer and the remaining 40% in the rear.**

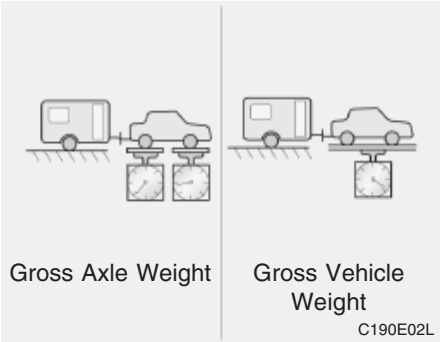

2. **The total gross vehicle weight with trailer must not exceed the Gross Vehicle Weight Rating (GVWR) shown on the vehicle identification plate (see page 8-2). The total gross vehicle weight is the combined weight of the vehicle, driver, all passengers and their luggage, cargo, hitch, trailer tongue load and other optional equipment.**
3. **The front or rear axle weight must not exceed the Gross Axle Weight Rating (GAWR) shown on the vehicle identification plate (see page 8-2). It is possible that your towing package does not exceed the GVWR but exceeds the**

GAWR. Improper trailer loading and/or too much luggage in the trunk can overload the rear axle. Redistribute the load and check the axle weight again.

4. **The maximum permissible static vertical load on the coupling device is 75 kg.**

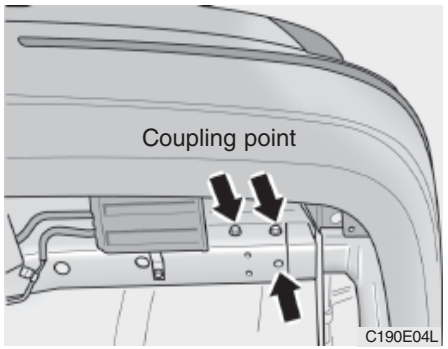

5. **The maximum permissible overhang of the coupling point : 1,230 mm.**

CAUTION:
The following specifications are recommended when towing a trailer. The loaded trailer weight cannot safely exceed the values in the chart below.

kg. (Lbs)

	Maximum Towable Weight	
	Trailer	Tongue
With Brake	1800 (3968)	75 (165.4)
Without Brake	750 (1653)	

WARNING:
Improperly loading your car and trailer can seriously affect its steering and braking performance causing a crash which could cause serious injury or death.

C190F01Y-GAT

Trailer or Vehicle Towing Tips

1. Before towing, check hitch and safety chain connections as well as proper operation of the trailer running lights, brake lights, and turn signals.
2. Always drive your vehicle at a moderate speed (Less than 100 km/h)
3. Trailer towing requires more fuel than normal conditions.
4. To maintain engine braking efficiency and electrical charging performance, do not use fifth gear (manual transaxle).
5. Always secure items in the trailer to prevent load shift while driving.
6. Check the condition and air pressure of all tires on the trailer and your car. Low tire pressure can seriously affect the handling. Also check the spare tire.
7. The vehicle/trailer combination is more affected by crosswind and buffeting.
   When being passed by a large vehicle, keep a constant speed and steer straight ahead. If there is too much wind buffeting slow down to

get out of the other vehicle's air turbulence.

8. When parking your car and trailer, especially on a hill, be sure to follow all the normal precautions. Turn your front wheel into the curb, set the parking brake firmly, and put the transaxle in 1st or Reverse (manual) or Park (automatic). In addition, place wheel chocks at each of the trailer's tires.
9. If the trailer has electric brakes, start your vehicle and trailer moving, and then apply the trailer brake controller by hand to be sure the brakes are working. This lets you check your electrical connection at the same time.
10. During your trip, check occasionally to be sure that the load is secure, and that the lights and any trailer brakes are still working.
11. Avoid jerky starts, sudden acceleration or sudden stops.
12. Avoid sharp turns and rapid lane changes.
13. Avoid holding the brake pedal down too long or too frequently. This could cause the brakes to overheat, resulting in reduced braking efficiency.
14. When going down a hill, shift into a lower gear and use the engine braking effect.
    When ascending a long grade, downshift the transaxle to a lower gear and reduce speed to reduce chances of engine overloading and/or overheating.
15. If you have to stop while going uphill, do not hold the vehicle in place by pressing on the accelerator. This can cause the automatic transaxle to overheat. Use the parking brake or footbrake.

NOTE:

When towing, check transaxle fluid more frequently.

CAUTION:

If overheating should occur when towing, (temperature gauge reads near red zone), taking the following action may reduce or eliminate the problem.

1. Turn off the air conditioner.
2. Reduce highway speed.
3. Select a lower gear when going uphill.
4. While in stop and go traffic, place the gear selector in park or neutral and idle the engine at a higher speed.

3. WHAT TO DO IN AN EMERGENCY

If the Engine Will not Start 3-2
Jump Starting 3-2
If the Engine Overheats 3-4
Spare Tire 3-5
If You Have a Flat Tire 3-5
If Your Car Must Be Towed 3-10
Emergency Towing 3-12
If You Lose Your Keys 3-12

D010A01A-AAT

IF THE ENGINE WILL NOT START

WARNING:

If the engine will not start, do not push or pull the car to start it. This could result in a collision or cause other damage. In addition, push or pull starting may cause the catalytic converter to be overloaded and create a fire hazard.

D010B01A-AAT

If Engine Doesn't Turn Over or Turns Over Slowly

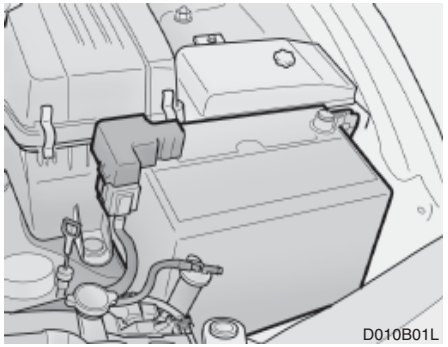

1. If your car has an automatic transaxle, be sure the gear selector lever is in "N" or "P" and the emergency brake is set.
2. Check the battery connections to be sure they are clean and tight.
3. Turn on the interior light. If the light dims or goes out when you operate the starter, the battery is discharged.
4. Check the starter connections to be sure they are securely tightened.
5. Do not push or pull the vehicle to start it. See instructions for "Jump Starting" on the following pages.

D010C01Y-AAT

If Engine Turns Over Normally but Does Not Start

1. Check fuel level.
2. Check all connectors at ignition, coil and spark plugs. Reconnect any that may be disconnected or loose.
3. Check the fuel line in the engine room.
4. If engine still refuses to start, call a Hyundai dealer or seek other qualified assistance.

D010D01A-AAT

If Engine Stalls While Driving

1. Reduce your speed gradually, keeping a straight line. Move cautiously off the road to a safe place.
2. Turn on your emergency flashers.
3. Try to start the engine again. If your vehicle will not start, contact a Hyundai dealer or seek other qualified assistance.

D020A02A-AAT

JUMP STARTING

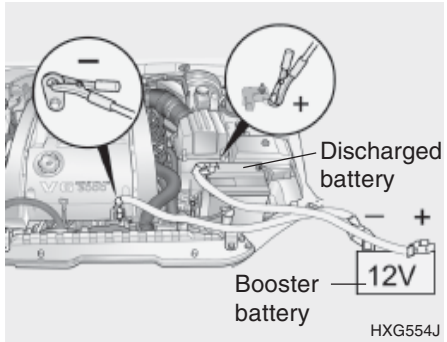

WARNING:
The gas produced by the battery during the jump-start operation is highly explosive. If these instructions are not followed exactly, serious personal injury and damage to the vehicle may occur! If you are not sure how to follow this procedure, seek qualified assistance. Automobile batteries contain sulfuric acid. This is poisonous and highly corrosive. When jump starting, wear protective glasses and be careful not to get acid on yourself, your clothing or on the car.

- o If you should accidentally get acid on your skin or in your eyes, immediately remove any contaminated clothing and flush the area with clear water for at least 15 minutes. Then promptly obtain medical attention. If you must be transported to an emergency facility, continue to apply water to the affected area with a sponge or cloth.
- o The gas produced by the battery during the jump-start operation is highly explosive. Do not smoke or allow a spark or open flame in the vicinity.
- o The battery being used to provide the jump start must be 12-volt. If you cannot determine that it is a 12-volt battery, do not attempt to use it for the jump start.
- o To jump start a car with a discharged battery, follow this procedure exactly:

1. If the booster battery is installed in another vehicle, be sure the two vehicles are not touching.
2. Turn off all unnecessary lights and accessories in both vehicles.
3. Attach the clamps of the jumper cable in the exact order shown in the illustration. That is, first, attach one clamp of the jumper cable to the positive (+) post or cable of the discharged battery. Then attach the other end of the same cable to the positive (+) post or cable of the booster battery. Next, using the other cable, attach one clamp to the negative (-) post or cable of the booster battery. Then attach the other end of that cable to a solid metal part of the engine away from the battery. Do not connect the cable to any moving part.
4. Start the engine in the car with the booster battery and let it run for a few minutes. This will help to assure that the booster battery is fully charged. During the jumping operation, run the engine in this vehicle at about 2,000 rpm.
5. Start the engine in the car with the discharged battery using the normal starting procedure. After the engine starts, leave the jumper cables connected and let the engine run at fast idle or about 2,000 rpm for several minutes.
6. Carefully remove the jumper cables in the reverse order of attachment.

If you do not know why your battery became discharged (because the lights were left on, etc.), have the charging system checked by your Hyundai dealer.

D030A01A-AAT

IF THE ENGINE OVERHEATS

If your temperature gauge indicates overheating, you experience a loss of power, or hear loud pinging or knocking, the engine is probably too hot. If this happens to you, you should:

1. Pull off the road and stop as soon as it is safe to do so.
2. Place the gear selector lever in "P" (automatic), or neutral (manual transaxle) and set the parking brake. If the air conditioning is on, turn it off.
3. If engine coolant is running out under the car or steam is coming out from the hood, stop the engine. Do not open the hood until the engine coolant has stopped running or the steaming has stopped. If there is no visible loss of coolant and no steam, leave the engine running and check to be sure the engine cooling fan is operating. If the fan is not running, turn the engine off.
4. Check to see if the water pump drive belt is missing. If it is not missing, check to see that it is tight. If the drive belt seems to be satisfactory, check for coolant leaking from the radiator, hoses or under the car. (If the air conditioning had been in use, it is normal for cold water to be draining from it when you stop).

WARNING:
While the engine is running, keep hair, hands, and clothing away from moving parts such as the fan and drive belts to prevent injury.

5. If the water pump drive belt is broken or engine coolant is leaking out, stop the engine immediately and call the nearest Hyundai dealer for assistance.

WARNING:
Do not remove the radiator cap when the engine is hot. This can allow coolant to be blown out of the opening and cause serious burns.

6. If you cannot find the cause of the overheating, wait until the engine temperature has returned to normal. Then, if the engine coolant has been lost, carefully remove the radiator cap and add engine coolant to bring the fluid level in the reservoir up to the halfway mark.
7. Proceed with caution, keeping alert for further signs of overheating. If overheating happens again, call a Hyundai dealer for assistance.

CAUTION:
Serious loss of engine coolant indicates there is a leak in the cooling system and this should be checked as soon as possible by a Hyundai dealer.

D040A01L-GAT

SPARE TIRE

The following instructions for the FULL SIZE spare tire should be observed: Check inflation pressure as soon as practical after installing the spare tire, and adjust to the specified pressure. The tire pressure should be periodically checked and maintained at the specified pressure while the tire is stored.

Spare Tire Pressure

RIM SIZE	TIRE SIZE	PRESSURE, kPa (PSI)			
		NORMAL LOAD		MAXIMUM LOAD	
		FRONT	REAR	FRONT	REAR
6.0x15	205/65R15 94V	220(32)	210(30)	240(35)	240(35)
6.0x16	205/60R16 96V	230(33)	210(30)	240(35)	240(35)

D040B01A-AAT

Handling the Spare Tire

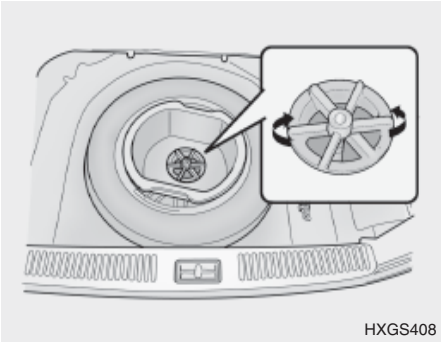

Remove the installation bolt to remove the spare tire. To replace the spare tire in its storage compartment, tighten the bolt firmly with your fingers until there is no more play in the spare tire.

D050A01A-AAT

IF YOU HAVE A FLAT TIRE

If a tire goes flat while you are driving:

1. Take your foot off the accelerator pedal and let the car slow down while driving straight ahead. Do not apply the brakes immediately or attempt to pull off the road as this may cause a loss of control. When the car has slowed to such a speed that it is safe to do so, brake carefully and pull off the road. Drive off the road as far as possible and park on firm, level ground. If you are on a divided highway, do not park in the median area between the two traffic lanes.
2. When the car is stopped, turn on your emergency hazard flashers, set the parking brake and put the transaxle in "P" (automatic) or reverse (manual transaxle).
3. Have all passengers get out of the car. Be sure they all get out on the side of the car that is away from traffic.
4. Change the tire according to the instructions provided as following.

D060A01A-AAT

CHANGING A FLAT TIRE

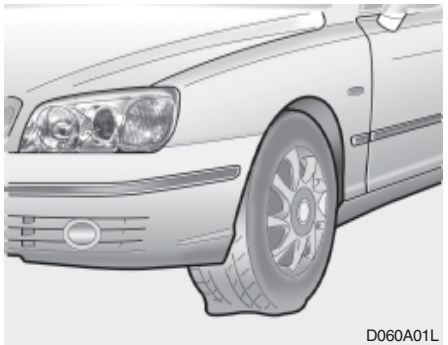

The procedure described on the following pages can be used to rotate tires as well as to change a flat tire. When preparing to change a flat tire, check to be sure the gear selector lever is in "P" (automatic) or reverse gear (manual transaxle) and that the parking brake is set, then:

D060K01FC-GAT

Wheel Cap (If installed)

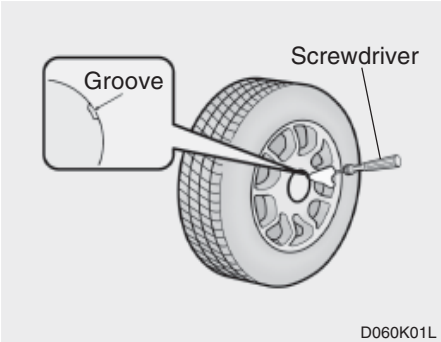

1. Wrap a piece of cloth around the tip of the screwdriver to avoid scratching.
2. Insert a screwdriver into the grove of the wheel cap and pry gently to remove the wheel cap.
3. Changing a flat tire.

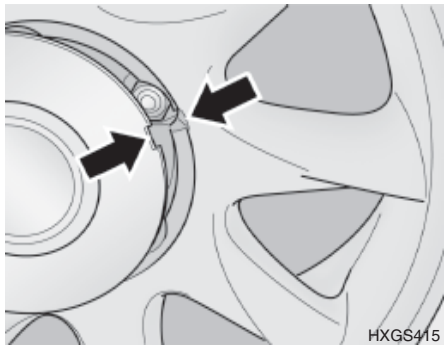

4. Reinstall the wheel cap by fitting the boss of the wheel cap in the groove of the wheel, hitting the center of the wheel cap with hand.

D060B01E-AAT

1. Obtain Spare Tire and Tool

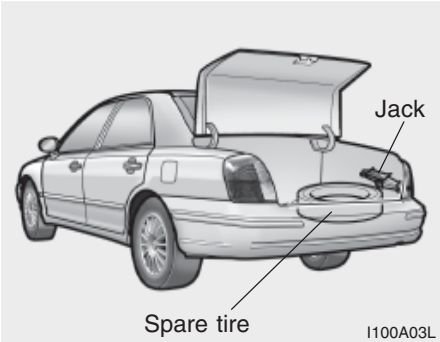

Remove the spare tire and take out the jack and tool bag from the trunk.

NOTE:

The jack is located beneath the luggage mat in the vehicle trunk.

D060C01A-AAT

2. Block the Wheel

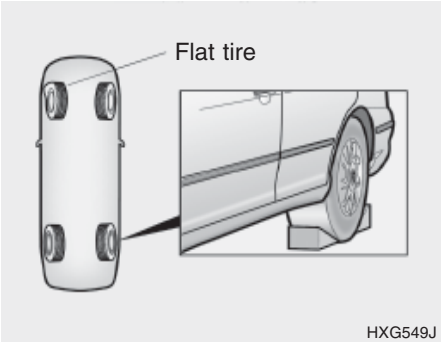

Block the wheel that is diagonally opposite from the flat to keep the vehicle from rolling when the car is raised on the jack.

D060D01A-AAT

3. Loosen Wheel Nuts

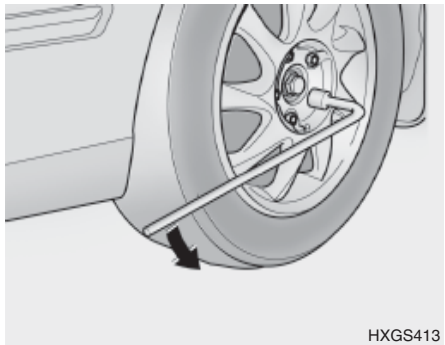

The wheel nuts should be loosened slightly before raising the car. To loosen the nuts, turn the wrench handle counterclockwise. When doing this, be sure that the socket is seated completely over the nut so it cannot slip off. For maximum leverage, position the wrench so the handle is to the right as shown in the drawing. Then, while holding the wrench near the end of the handle, pull up on it with steady pressure. Do not remove the nuts at this time. Just loosen them about one-half turn.

D060E01A-AAT

4. Put the Jack in Place

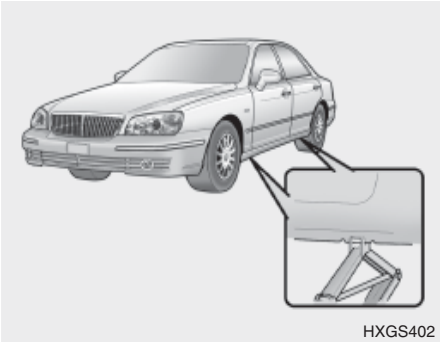

The base of the jack should be placed on firm, level ground. The jack should be positioned as shown in the drawing.

D060F02E-AAT

5. Raising the Car

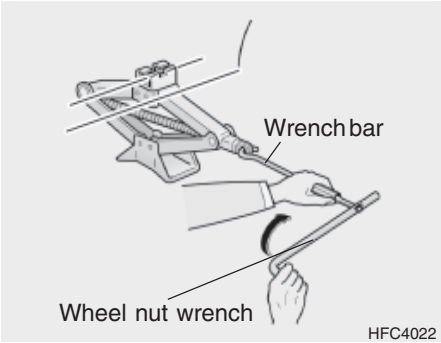

After inserting a wrench bar into the wheel nut wrench, install the wrench bar into the jack as shown in the drawing. To raise the vehicle, turn the wheel nut wrench clockwise. As the jack begins to raise the vehicle, double check that it is properly positioned and will not slip. If the jack is on soft ground or sand, place a board, brick, flat stone or other object under the base of the jack to keep it from sinking.

Raise the car high enough so that the fully inflated spare tire can be installed. To do this, you will need more ground clearance than is required to remove the flat tire.

WARNING:

Do not get under the car when it is supported by the jack! This is very dangerous as the vehicle could fall and cause serious injury or death. No one should stay in the car while the jack is being used.

D060G02Y-AAT

6. Changing Wheels

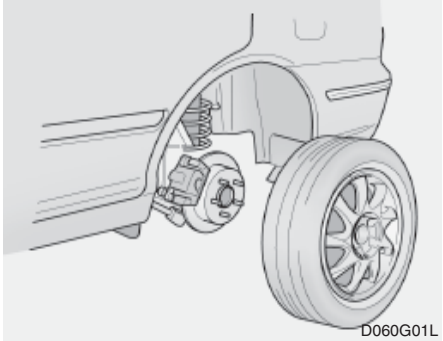

Loosen the wheel nuts and remove them with your fingers. Slide the wheel off the studs and lay it flat so it cannot roll away. To put the wheel on the hub, pick up the spare tire, line up the holes

with the studs and slide the wheel onto them. If this is difficult, tip the wheel slightly and get the top hole in the wheel lined up with the top stud. Then jiggle the wheel back and forth until the wheel can be slid over the other studs.

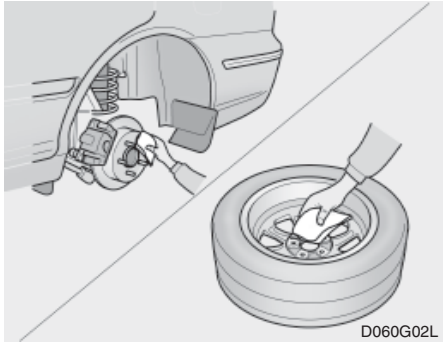
D060G02L

WARNING:
Wheel covers may have sharp edges. Handle them carefully to avoid possible severe injury. Before putting the wheel into place, be sure that there is nothing on the hub or wheel (such as mud, tar, gravel, etc.) that interferes with the wheel from fitting solidly against the hub. If there is, remove it. If there is not good contact on the mounting surface between the wheel and hub, the wheel nuts could come loose and cause the loss of a wheel. Loss of a wheel may result in loss of control of the vehicle. This may cause serious injury or death.

D060H01A-AAT

7. Reinstall Wheel Nuts

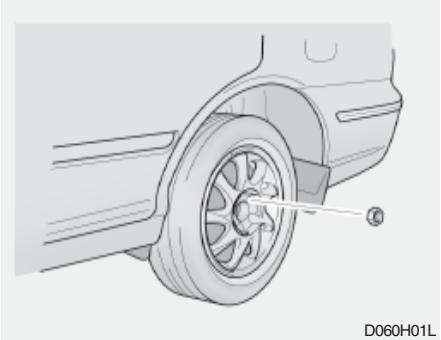
D060H01L

To reinstall the wheel cover, hold it on the wheel and put the wheel nuts on the studs and tighten them finger tight. The nuts should be installed with their small diameter ends directed inward. Jiggle the tire to be sure it is completely seated, then tighten the nuts with your fingers again.

D060I01E-GAT

8. Lower Vehicle and Tighten Nuts

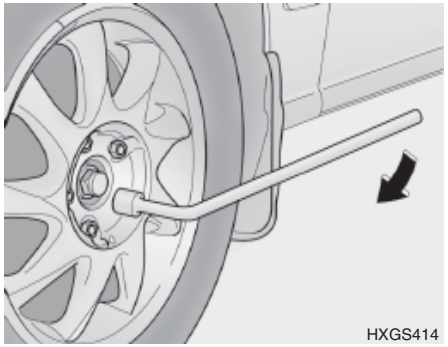

Lower the car to the ground by turning the wheel nut wrench counterclockwise. Then position the wrench as shown in the drawing and tighten the wheel nuts. Be sure the socket is seated completely over the nut. Do not stand on the wrench handle or use an extension pipe over the wrench handle. Go around the wheel tightening every other nut until they are all tight. Then double-check each nut for tightness. After changing wheels, have a technician tighten the wheel nuts to their proper torque as soon as possible.

Wheel nut tightening torque:

Steel wheel & aluminium alloy wheel: 900-1,100 kg.cm (65-80 lb.ft)

D060J01E-AAT

After Changing Wheels

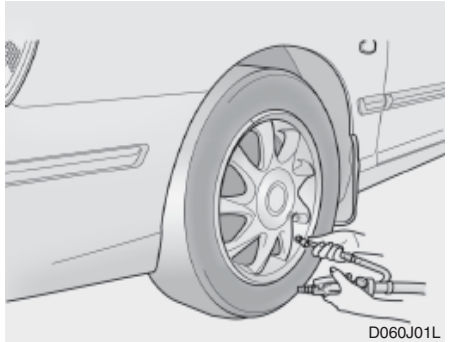

If you have a tire gauge, remove the valve cap and check the air pressure. If the pressure is lower than recommended, drive slowly to the nearest service station and inflate to the correct pressure. If it is too high, adjust it until it is correct. Always reinstall the valve cap after checking or adjusting tire pressure. If the cap is not replaced, air may leak from the tire. If you lose a valve cap, buy another and install it as soon as possible.

After you have changed wheels, always secure the flat tire in its place in the trunk and return the jack and tools to their proper storage locations.

D080A01A-AAT

IF YOUR CAR MUST BE TOWED

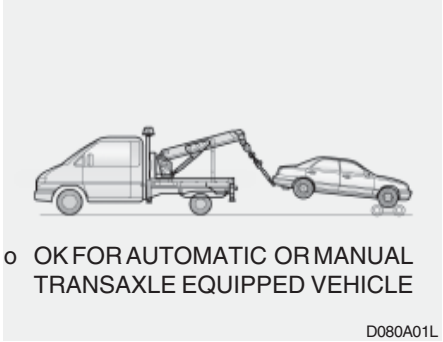

CAUTION:
Your car can be damaged if towed incorrectly!

If your car has to be towed, it should be done by your Hyundai dealer or a commercial tow truck service. This will help assure that your car is not damaged in towing. Also, professionals are generally aware of state and local laws governing towing. In any case, rather than risk damage to your car, it is suggested that you show this information to the tow truck operator. Be sure that a safety chain system is used and that all state and local laws are observed.

D080B01A-AAT

Towing a Car With a Manual Transaxle

- o If the car is being towed with the rear wheels on the ground, be sure the parking brake is released.
- o If the car is being towed with the front wheels on the ground, be sure that the transaxle is in neutral. Also, be sure that the ignition key is in the "ACC" position. This is necessary to prevent damage to the steering lock mechanism, which is not designed to hold the front wheels straight while the car is being towed.
- o If any of the loaded wheels or suspension components are damaged, a towing dolly must be used.

D080C02A-GAT

Towing a Car With Automatic Transaxle

CAUTION:

A car with an automatic transaxle should never be towed from the rear with the front wheels on the ground. This can cause serious damage to the transaxle. If the car must be towed from the rear, a towing dolly must be used under the front wheels.

If the car is being towed with the rear wheels on the ground, be sure the parking brake is released.

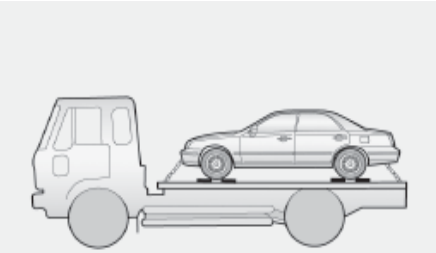

o OK FOR AUTOMATIC OR MANUAL TRANSAXLE EQUIPPED VEHICLE

D080C01L

NOTE:

Before towing, check the level of the transaxle fluid. If it is below the "HOT" range on the dipstick, add fluid. If you cannot add fluid, a towing dolly must be used.

D080D02A-GAT

EMERGENCY TOWING

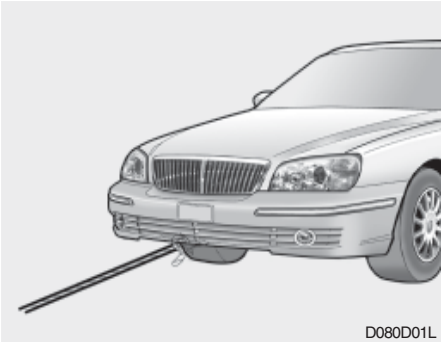

D080D01L

For emergency towing when no commercial tow vehicle is available, attach a tow cable, chain or strap to one of the tie-down hooks under the front of your car. Do not attempt to tow your vehicle in this manner on any unpaved surface. This could result in serious damage to your car.

Nor should towing be attempted if the wheels, drive train, axles, steering or brakes are damaged. Before towing, be sure the transaxle is in neutral and the key is in "ACC" (with the engine off) or in the "ON" position (with the engine running). A driver must be in the towed car to steer it and operate the brakes.

CAUTION:

If the car is being towed with all four wheels on the ground, it can be towed only from the front. Be sure that the transaxle is in neutral. Do not tow at speeds greater than 50 km/h (30 mph) and for more than 25 km (15 miles).

Be sure the steering is unlocked by placing the key in the "ACC" position. A driver must be in the towed vehicle to operate the steering and brakes.

D120A01A-GAT

IF YOU LOSE YOUR KEYS

If you lose your keys, many Hyundai dealers can make you a new key if you have your key number.

If you lock the keys inside your car and you cannot obtain a new key, many Hyundai dealers can use special tools to open the door for you.

Information about the key of immobilizer system (if installed) will be found on page 1-4.

4. CORROSION PREVENTION & APPEARANCE CARE

Corrosion Protection 4-2
To Help Prevent Corrosion 4-2
Washing and Waxing 4-3
Cleaning the Interior 4-5

E010A01A-AAT

CORROSION PROTECTION

Protecting Your Hyundai from Corrosion:
By using the most advanced design and construction practices to combat corrosion, Hyundai produces cars of the highest quality. However, this is only part of the job. To achieve the long-term corrosion resistance your Hyundai can deliver, the owner's cooperation and assistance is also required.

E010B01A-AAT

Common Causes of Corrosion

The most common causes of corrosion on your car are:

- o Road salt, dirt and moisture that is allowed to accumulate underneath the car.
- o Removal of paint or protective coatings by stones, gravel, abrasion or minor scrapes and dents which leave unprotected metal exposed to corrosion.

E010C01A-AAT

High-Corrosion Areas

If you live in an area where your car is regularly exposed to corrosive materials, corrosion protection is particularly important. Some of the common causes of accelerated corrosion are road salts, dust control chemicals, ocean air and industrial pollution.

E010D01A-AAT

Moisture Breeds Corrosion

Moisture creates the conditions in which corrosion is most likely to occur. For example, corrosion is accelerated by high humidity, particularly when temperatures are just above freezing. In such conditions, the corrosive material is kept in contact with the car surfaces by moisture that is slow to evaporate.

Mud is particularly corrosive because it is slow to dry and holds moisture in contact with the vehicle. Although the mud appears to be dry, it can still retain the moisture and promote corrosion.
High temperatures can also accelerate corrosion of parts that are not properly ventilated so the moisture can be dispersed. For all these reasons, it is particularly important to keep your car clean and free of mud or accumulations of other materials. This applies not only to the visible surfaces but particularly to the underside of the car.

E020A01A-AAT

TO HELP PREVENT CORROSION

You can help prevent corrosion from getting started by observing the following:

E020B01A-AAT
Keep Your Car Clean

The best way to prevent corrosion is to keep your car clean and free of corrosive materials. Attention to the underside of the car is particularly important.

- o If you live in a high-corrosion area — where road salts are used, near the ocean, areas with industrial pollution, acid rain, etc.—, you should take extra care to prevent corrosion. In winter, hose off the underside of your car at least once a month and be sure to clean the underside thoroughly when winter is over.
- o When cleaning underneath the car, give particular attention to the components under the fenders and other areas that are hidden from view. Do a thorough job; just dampening the accumulated mud rather than washing it away will accelerate corrosion rather than prevent it. Water under high pressure and steam are particularly effective in removing accumulated mud and corrosive materials.
- o When cleaning lower door panels, rocker panels and frame members, be sure that drain holes are kept open so that moisture can escape and not be trapped inside to accelerate corrosion.

E020C01A-AAT
Keep Your Garage Dry

Don't park your car in a damp, poorly ventilated garage. This creates a favorable environment for corrosion. This is particularly true if you wash your car in the garage or drive it into the garage when it is still wet or covered with snow, ice or mud. Even a heated garage can contribute to corrosion unless it is well ventilated so moisture is dispersed.

E020D01A-AAT
Keep Paint and Trim in Good Condition

Scratches or chips in the finish should be covered with "touch-up" paint as soon as possible to reduce the possibility of corrosion. If bare metal is showing through, the attention of a qualified body and paint shop is recommended.

E020E01A-AAT
Don't Neglect the Interior

Moisture can collect under the floor mats and carpeting to cause corrosion. Check under the mats periodically to be sure the carpeting is dry. Use particular care if you carry fertilizers, cleaning materials or chemicals in the car.
These should be carried only in proper containers and any spills or leaks should be cleaned up, flushed with clear water and thoroughly dried.

E030A01GK-AAT
WASHING AND WAXING
Washing Your Hyundai

Never wash your car when the surface is hot from being in the sun. Always wash your car in the shade.

Wash your car frequently. Dirt is abrasive and can scratch the paint if it is not removed. Air pollution or acid rain may damage the paint and trim through chemical action if pollutants are allowed to remain in contact with the surface. If you live near the ocean or in an area where road salts or dust con-

trol chemicals are used, you should pay particular attention to the underside of the car. Start by rinsing the car to remove dust and loose dirt. In winter, or if you have driven through mud or muddy water, be sure to thoroughly clean the underside as well. Use a hard direct stream of water to remove accumulations of mud or corrosive materials. High pressure car washes may cause water to enter your vehicle. Use a good quality car-washing solution and follow the manufacturer's directions on the package. These are available at your Hyundai dealer or auto parts outlet. Don't use strong household detergents, gasoline, strong solvents or abrasive cleaning powders as these may damage the finish.
Use a clean sponge or cloth, rinse it frequently and don't damage the finish by rubbing too hard. For stubborn spots, dampen them frequently and remove them a little at a time.

To clean whitewall tires, use a stiff brush or soapy steel-wool scouring pad.
To clean plastic wheel covers, use a clean sponge or soft cloth and water.

To clean cast aluminum alloy wheels, use a mild soap or neutral detergent. Do not use abrasive cleaners. Protect the bare-metal surfaces by cleaning, polishing and waxing. Because aluminum is subject to corrosion, be sure to give aluminum alloy wheels special attention in winter. If you drive on salted roads, clean the wheels thoroughly afterwards.

After washing, be sure to rinse thoroughly. If soapy water dries on the finish, streaking will result.

When the weather is warm and the humidity low, you may find it necessary to rinse each section immediately after washing to avoid streaking.

After rinsing, dry the car using a damp chamois or soft, absorbent cloth. The reason for drying the car is to remove water from the car so it will dry without water spots. Don't rub, this can damage the finish.

If you find any nicks or scratches in the paint, use touch-up paint to cover them to prevent corrosion. To protect the paintwork of the car against corrosion, you must clean your Hyundai (at least once a month). Give special attention to the removal of salt, mud and other substances on the underside of the splashboards of the car. Make sure that the outlets and the underside of the doors are open. Paint damage can be caused by small accumulation of tar, industrial precipitation, tree resin, insects and bird droppings, when not removed immediately. If water alone is not strong enough to remove the accumulated dirt, use a mild car washing solution. Be sure to rinse the surface after washing to remove the solution. Never allow the solution to dry on the painted surfaces.

E030B01A-AAT
Spot Cleaning

Don't use gasoline, strong solvents or corrosive cleaning agents. These can damage the finish of the car. To remove road tar, use turpentine on a clean, soft cloth or commercially available bug and tar remover. Be gentle. To remove dead insects or tree sap, use warm water and mild soap or car-washing solution. Soak the spot and rub gently. If the paint has lost its luster, use a commercial car-cleaning polish.

E030C01A-AAT
Polishing and Waxing

Always wash and dry the car before polishing or waxing or using a combination cleaner and wax. Use a good quality commercial product and follow the manufacturer's directions on the container. Polish and wax the bright trim pieces as well as the paint.

E030D01A-AAT
When to Wax Again

You should polish and wax the car again when water no longer beads on a clean surface but spreads out over a larger area.

E030E01A-AAT
Maintaining Bumpers

Special precautions must be observed to preserve the appearance of the bumpers on your Hyundai. They are:

- Be careful not to spill battery electrolyte or hydraulic brake fluid on the bumpers. If you do, wash it off immediately with clear water.
- Be gentle when cleaning the bumper surfaces. They are made of soft plastic and the surface can be damaged if mistreated. Do not use abrasive cleaners. Use warm water and mild soap or car-washing solution.
- Do not expose the bumpers to high temperatures. For example, if you have your car repainted, do not leave the bumpers on the car if the car is going to be placed in a high-temperature paint booth.

E040A01A-AAT
CLEANING THE INTERIOR
To Clean the Vinyl Upholstery

To clean the vinyl upholstery, first remove loose dirt and dust with a vacuum cleaner. Then apply a solution of mild soap or detergent and water using a clean sponge or soft cloth. Allow this to stay on the surface to loosen the dirt, then wipe with a clean damp sponge or cloth. If all the dirt stains are not removed, repeat this procedure until the upholstery is clean. Do not use gasoline, solvent, paint thinner or other strong cleaners.

E040B01A-AAT
To Clean the Leather Upholstery (If installed)

In the normal course of use, leather upholstered surfaces will, like any material, pick-up dust and dirt. This dust and dirt must be cleaned off or it may work into the surface of the leather, causing damage.

Fine leather needs care, and should be cleaned when necessary. Washing leather thoroughly with soap and water

will keep your leather lustrous, beautiful and ensure you have many years of wear.
Take a piece of cheese cloth and using any mild soap and lukewarm water, work up a good lather. Thoroughly wash the leather. Wipe clean with a slightly damp cloth and dry with soft cloth. Do this as often as the leather becomes soiled.

During tanning operations, sufficient oils are incorporated through processing that none need be applied during the life of the leather. Oil applied to the finished surface will in no way help the leather and may do more harm than good. Varnishes and furniture polishes should never be used under any conditions.

E040C01A-AAT

Cleaning the Carpets

Use a foam-type carpet cleaner. Cleaners of this type are available in aerosol cans in liquid form or powder. Read the instructions and follow them exactly. Using a vacuum cleaner with the appropriate attachment, remove as much dirt from the carpets as possible. Apply the foam following the manufacturer's directions, then rub in overlapping circles. Do not add water. These cleaners work best when the carpet is kept as dry as possible.

E040D01A-AAT

Cleaning the Seat Belts

To clean the seat belts, use a cloth or sponge with mild soap or detergent and warm water. Do not use strong detergents, dye, bleach or abrasive materials on the seat belts as this may weaken the fabric.
While cleaning the belts, inspect them for excessive wear, cuts, fraying or other signs of damage and replace them if necessary.

E040E01A-AAT

Cleaning the Windows

You may use any household window cleaner on the windows. However, when cleaning the inside of the rear window be careful not to damage the rear window defroster wiring.

E050A01A-AAT

Any Questions?

If you have any questions about the care of your car, consult your Hyundai dealer.

5. VEHICLE MAINTENANCE REQUIREMENTS

Maintenance Intervals 5-2
Scheduled Maintenance 5-4
Maintenance Under Severe Usage Conditions 5-6
Explanation of Scheduled Maintenance Items 5-7

F010A01A-GAT

MAINTENANCE INTERVALS

Service Requirements

To assure that you receive the greatest number of kilometers of satisfying operation from your Hyundai, certain maintenance procedures must be performed. Although careful design and engineering have reduced these to a minimum, those that are required are of the utmost importance.
It is your responsibility to have these maintenance procedures performed to comply with the terms of the warranties covering your new Hyundai. The Service Passport supplied with your new vehicle provides further information about these warranties.

F010B01A-AAT

Maintenance Requirements

The maintenance required for your Hyundai can be divided into three main areas:

- o Specified scheduled procedures
- o General checks
- o Do-it-yourself maintenance

F010C01A-GAT

Specified Scheduled Procedures

These are the procedures such as inspections, adjustments and replacements that are listed in the maintenance charts starting on page 5-4. These procedures must be performed at the intervals shown in the maintenance schedule to assure that your warranty remains in effect. Although it is strongly recommended that they be performed by the factory-trained or distributor-trained technicians at your Hyundai dealer, these procedures may be performed at any qualified service facility.

It is suggested that genuine Hyundai service parts be used for any required repairs or replacements. Other parts of equivalent quality such as engine oil, engine coolant, manual or auto transaxle oil, brake fluid and so on which are not supplied by Hyundai Motor Company or its distributor may be used without affecting your warranty coverage but you should always be sure these are equivalent to the quality of the original Hyundai parts. Your Service Passport provides further information about your warranty coverage.

F010D01A-GAT

General Checks

These are the regular checks you should perform when you drive your Hyundai or you fill the fuel tank. A list of these items will be found on page 6-5.

F010E01A-AAT

Do-It-Yourself Maintenance

If you are mechanically inclined, own a few tools that are required and want to take the time to do so, you can inspect and service a number of items. For more information about doing it yourself, see Section 6.

F010F01A-AAT

A Few Tips

- o Whenever you have your Hyundai serviced, keep copies of the service records in your glove box. This will help ensure that you can document that the required procedures have been performed to keep your warranties in effect. This is especially important when service is not performed by an authorized Hyundai dealer.
- o If you choose to do your own maintenance and repairs, you may find it helpful to have an official Hyundai Shop Manual. A copy of this publication may be purchased at your Hyundai dealer's parts department.

F020A01Y-GAT

SCHEDULED MAINTENANCE REQUIREMENTS

Inspection should be performed any time a malfunction is experienced or suspected. Receipts for all emission control system services should be retained to demonstrate compliance with conditions of the emissions system warranty.
For severe usage maintenance requirements, see page 5-6 of this section.

F030A01A-GAT

SCHEDULED MAINTENANCE

The following maintenance services must be performed to assure good vehicle control and performance. Keep receipts for all vehicle services to protect your warranty. Where both mileage and time are shown, the frequency of service is determined by whichever occurs first.

F030B02L-GAT

R :Replace I : Inspect and, after Inspection, clean, adjust, repair or replace if necessary.

NO.	DESCRIPTION		KILOMETERS X 1000	15	30	45	60	75	90	105	120
			MONTHS	12	24	36	48	60	72	84	96
	ENGINE CONTROL SYSTEM MAINTENANCE										
1	ENGINE OIL & FILTER (SG OR ABOVE)		See Note (1)	R	R	R	R	R	R	R	R
2	DRIVE BELT	3.0 V6 / 3.5 V6 (ALT, P/STRG, A/CON)		I	I	I	I	I	I	I	R
		2.5 V6 (AUTO-TENSIONER)			I		I		I		I
3	FUEL FILTER (MFI TYPE)						R				R
4	FUEL LINES, FUEL HOSES & CONNECTIONS			I	I	I	I	I	I	I	I
5	TIMING BELT						I		R		
6	VAPOR HOSE & FUEL FILLER CAP				I		I		I		I
7	VACUUM & CRANKCASE VENTILATION HOSES				I		I		I		I
8	AIR CLEANER FILTER			I	R	I	R	I	R	I	R
9	SPARK PLUGS			See Note (2)							
	SPARK PLUGS (PLATINUM COATED)			See Note (3)							

Note : (1) SF OR LOWER: EVERY 10,000 KM OR 6 MONTHS : "R"
(2) FOR EVERY 40,000KM : "R"
(3) FOR EVERY 100,000KM : "R"

F030C04L-GAT

R : Replace I : Inspect and, after inspection, clean, adjust, repair or replace if necessary

NO.	DESCRIPTION		KILOMETERS X 1000	15	30	45	60	75	90	105	120
			MONTHS	12	24	36	48	60	72	84	96
	GENERAL MAINTENANCE										
1	COOLING SYSTEM			I	I	I	I	I	I	I	I
2	COOLANT			See Note (1)							
3	MANUAL TRANSAXLE OIL			I	I	I	I	I	I	I	I
4	AUTOMATIC TRANSAXLE FLUID AND FILTER	European Community Only		I	I	I	I	I	R	I	I
		Except European Community		I	I	I	I	I	I	I	I
5	BRAKE HOSES AND LINES			I	I	I	I	I	I	I	I
6	BRAKE FLUID				I		I		I		I
7	REAR BRAKE DRUMS/LININGS, PARKING BRAKE				I		I		I		I
8	BRAKE PADS, CALIPERS AND ROTORS			I	I	I	I	I	I	I	I
9	EXHAUST PIPE AND MUFFLER			I	I	I	I	I	I	I	I
10	SUSPENSION MOUNTING BOLTS			I	I	I	I	I	I	I	I
11	STEERING GEAR BOX, LINKAGE & BOOTS/LOWER ARM BALL JOINT, UPPER ARM BALL JOINT			I	I	I	I	I	I	I	I
12	POWER STEERING BELT, PUMP AND HOSES			I	I	I	I	I	I	I	I
13	DRIVE SHAFTS AND BOOTS				I		I		I		I
14	AIR CONDITIONING REFRIGERANT			I	I	I	I	I	I	I	I
15	AIR FILTER (FOR EVAPORATOR AND BLOWER UNIT)			See Note (2)							

Note : (1) FOR EVERY 24 MONTHS OR 45,000 KM, WHICHEVER OCCURS FIRST : "R"
(2) FOR EVERY 12 MONTHS OR 20,000 KM, WHICHEVER OCCURS FIRST : "R"

F040A03L-GAT

MAINTENANCE UNDER SEVERE USAGE CONDITIONS

The following items must be serviced more frequently on cars normally used under severe driving conditions. Refer to the chart below for the appropriate maintenance intervals.

R : Replace I : Inspect and, after inspection, clean, adjust, repair or replace if necessary

MAINTENANCE ITEM		MAINTENANCE OPERATION	MAINTENANCE INTERVALS	DRIVING CONDITION
ENGINE OIL AND FILTER		R	EVERY 7,500 KM OR 6 MONTHS	A, B, C, F, H
AIR CLEANER FILTER		R	MORE FREQUENTLY	C, E
SPARK PLUGS		R	MORE FREQUENTLY	B, H
TIMING BELT		R	EVERY 60,000 KM OR 48 MONTHS	D, E, F, G
BRAKE PADS, CALIPERS AND ROTORS		I	MORE FREQUENTLY	C, D, G, H
REAR BRAKE DRUMS/LININGS, PARKING BRAKE		I	MORE FREQUENTLY	C, D, G, H
STEERING GEAR BOX, LINKAGE& BOOTS/ LOWER ARM BALL JOINT,UPPER ARM BALL JOINT		I	MORE FREQUENTLY	C, D, E, F
DRIVESHAFTS & BOOTS		I	EVERY 15,000 KM OR 12 MONTHS	C, D, E, F
MANUAL TRANSAXLE OIL		R	EVERY 100,000 KM	A, C, D, E, F, G, H, I, J
AUTOMATIC TRANSA-XLE FLUID AND FILTER	European Community Only	R	EVERY 45,000 KM	A, C, E, F, G, H, I, J
	Except European Community		EVERY 40,000 KM	
AIR FILTER (FOR EVAP. AND BLOWER UNIT)		R	MORE FREQUENTLY	C, E

SEVERE DRIVING CONDITIONS

A - Repeated short distance driving
B - Extensive idling
C - Driving in dusty, rough roads
D - Driving in areas using salt or other corrosive materials or in very cold weather
E - Driving in sandy areas
F - More than 50% driving in heavy city traffic during hot weather above 32°C (90°F)
G - Driving in mountainous areas
H - Towing a trailer
I - Driving as a patrol car, taxi, vehicle towing or other commercial use
J - Driving over 170 Km/h (100 MPH)

F060A01A-AAT

EXPLANATION OF SCHEDULED MAINTENANCE ITEMS

F060M01A-AAT

o Engine Oil and Filter

The engine oil and filter should be changed at the intervals specified in the maintenance schedule. If the car is being driven in severe conditions, more frequent oil and filter changes are required.

F060B01A-AAT

o Drive Belts

Inspect all drive belts for evidence of cuts, cracks, excessive wear or oil and replace if necessary. Drive belts should be checked periodically for proper tension and adjusted as necessary.

F060C01A-AAT

o Fuel Filter

A clogged filter can limit the speed at which the vehicle may be driven, damage the emission system and cause hard starting. If an excessive amount of foreign matter accumulates in the fuel tank, the filter may require replacement more frequently.

After installing a new filter, run the engine for several minutes, and check for leaks at the connections. Fuel filters should be installed by trained technicians.

F060D01A-AAT

o Fuel Lines, Fuel Hoses and Connections

Check the fuel lines, fuel hoses and connections for leakage and damage. Have a trained technician replace any damaged or leaking parts immediately.

F060E01A-AAT

o Timing Belt

Inspect all parts related to the timing belt for damage and deformation. Replace any damaged parts immediately.

F060G01A-AAT

o Vapor Hose and Fuel Filler Cap

The vapor hose and fuel filler cap should be inspected at those intervals specified in the maintenance schedule. Make sure that a new vapor hose or fuel filler cap is correctly replaced.

F060F01A-AAT

o Vacuum, Crankcase Ventilation Hoses

Inspect the surface of hoses for evidence of heat and/or mechanical damage. Hard and brittle rubber, cracking, tears, cuts, abrasions, and excessive swelling indicate deterioration. Particular attention should be paid to examine those hose surfaces nearest to high heat sources, such as the exhaust manifold.

Inspect the hose routing to assure that the hoses do not come in contact with any heat source, sharp edges or moving component which might cause heat damage or mechanical wear. Inspect all hose connections, such as clamps and couplings, to make sure they are secure, and that no leaks are present. Hoses should be replaced immediately if there is any evidence of deterioration or damage.

F060H01A-AAT

o Air Cleaner Filter

A Genuine Hyundai air cleaner filter is recommended when the filter is replaced.

F060J01A-AAT

o Spark Plugs

Make sure to install new spark plugs of the correct heat range.

F070C02A-AAT

o Coolant

The coolant should be changed at the intervals specified in the maintenance schedule.

F070D01A-AAT

o Manual Transaxle Oil

Inspect the manual transaxle oil according to the maintenance schedule.

NOTE:

If the oil level is low, check for possible leaks before adding oil. Do not overfill.

F070E03A-AAT

o Automatic Transaxle Fluid and Filter

The fluid level should be in the "HOT" range of the dipstick, after the engine and transaxle are at normal operating temperature. Check the automatic transaxle fluid level with the engine running and the transaxle in neutral, with the parking brake properly applied. Use DIAMOND ATF SP-III or SK ATF SP-III when adding or changing fluid.

F070F01A-AAT

o Brake Hoses and Lines

Visually check for proper installation, chafing, cracks, deterioration and any leakage. Replace any deteriorated or damaged parts immediately.

F070G02A-AAT

o Brake Fluid

Check brake fluid level in the brake fluid reservoir. The level should be between "MIN" and "MAX" marks on the side of the reservoir. Use only hydraulic brake fluid conforming to DOT 3 or DOT 4.

F070H01A-AAT

o Rear Brake Drums/Linings, Parking Brake

Check the rear brake drums and linings for scoring, burning, leaking fluid, broken parts, and excessive wear. Inspect the parking brake system including the parking brake lever and cables. For detailed service procedures, refer to the Shop Manual.

F070J01A-AAT

o Brake Pads, Calipers and Rotors

Check the pads for excessive wear, discs for run out and wear, and calipers for fluid leakage.

F070K01A-AAT

o Exhaust Pipe and Muffler

Visually inspect the exhaust pipes, muffler and hangers for cracks, deterioration, or damage. Start the engine and listen carefully for any exhaust gas leakage. Tighten connections or replace parts as necessary.

F070L01A-AAT

o Suspension Mounting Bolts

Check the suspension connections for looseness or damage. Retighten to the specified torque.

F070M01Y-AAT

o Steering Gear Box, Linkage & Boots / Lower Arm Ball Joint, Upper Arm Ball Joint

With the vehicle stopped and engine off, check for excessive free-play in the steering wheel.
Check the linkage for bends or damage. Check the dust boots and ball joints for deterioration, cracks, or damage. Replace any damaged parts.

F070N01A-AAT

o Power Steering Pump, Belt and Hoses

Check the power steering pump and hoses for leakage and damage. Replace any damaged or leaking parts immediately. Inspect the power steering belt for evidence of cuts, cracks, excessive wear, oiliness and proper tension. Replace or adjust it if necessary.

F070P01A-AAT

o Driveshafts and Boots

Check the drive shafts, boots and clamps for cracks, deterioration, or damage. Replace any damaged parts and, if necessary, repack the grease.

F070Q01A-AAT

o Air Conditioning Refrigerant

Check the air conditioning lines and connections for leakage and damage. Check air conditioning performance according to the relevant shop manual if necessary.

6. Do-It-Yourself Maintenance

Engine Compartment 6-2
General Checks 6-5
Checking the Engine Oil 6-6
Changing the Oil and Filter 6-7
Checking and Changing the Engine Coolant 6-8
Spark Plugs 6-10
Changing the Air Cleaner Filter 6-11
Checking the Transaxle Oil (Manual) 6-13
Checking the Transaxle Fluid (Automatic) 6-14
Checking the Brakes 6-15
Checking the Clutch Fluid 6-16
Air Conditioning Care 6-17
Changing the Air Filter (For Evaporator and Blower Unit) 6-18
Checking Drive Belts 6-21
Checking and Replacing Fuses 6-21
Power Steering Fluid Level 6-24
Headlight Aiming Adjustment 6-25
Replacement of Light Bulbs 6-26
Bulb Wattage 6-33
Junction Box Description 6-34

G010C01L-AAT

ENGINE COMPARTMENT (3.5 V6)

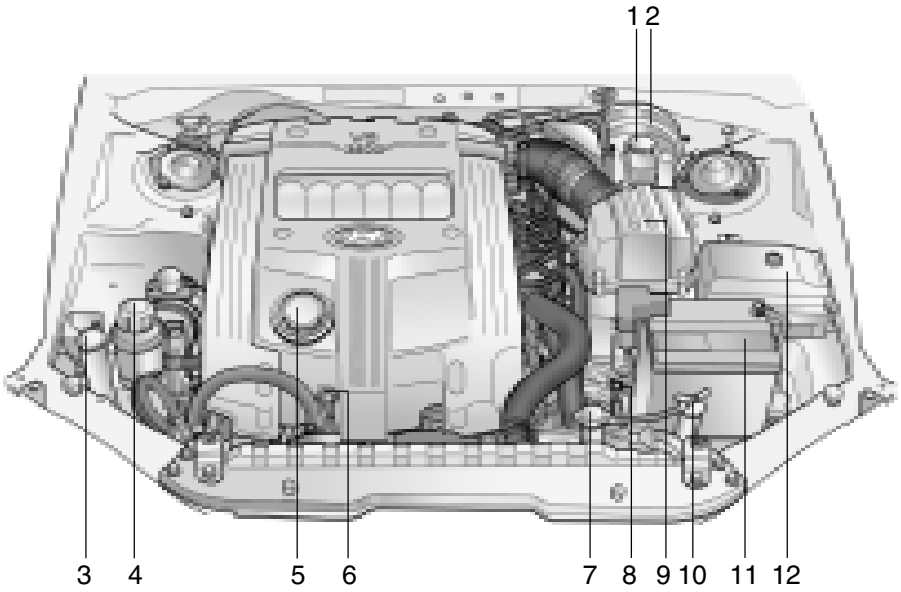

G010C01L

CAUTION:
When inspecting or servicing the engine, you should handle tools and other heavy objects carefully so that the plastic cover of the engine is not damaged.

1. Brake fluid reservoir
2. Brake booster
3. Windshield washer fluid reservoir
4. Power steering fluid reservoir
5. Engine oil filler cap
6. Engine oil level dipstick
7. Radiator cap
8. Auto transaxle fluid level dipstick (Vehicle with Auto T/A)
9. Air filter element
10. Coolant reservoir cap
11. Battery
12. Under hood junction box

G010A02L-GAT

ENGINE COMPARTMENT (3.0 V6)

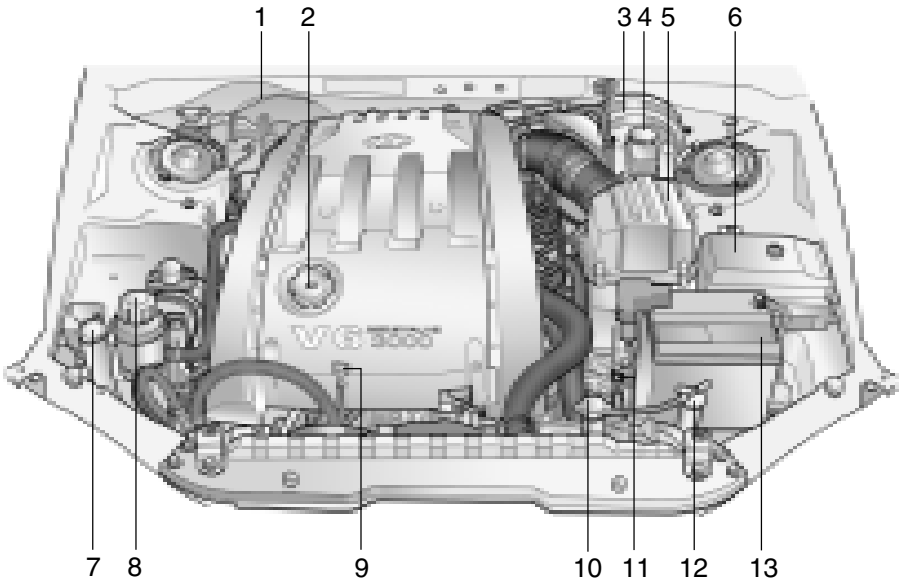

CAUTION:
When inspecting or servicing the engine, you should handle tools and other heavy objects carefully so that the plastic cover of the engine is not damaged.

HXGS003

1. Cruise control actuator (If installed)
2. Engine oil filler cap
3. Brake booster
4. Brake fluid reservoir
5. Air filter element
6. Under hood junction box
7. Windshield washer fluid reservoir
8. Power steering fluid reservoir
9. Engine oil level dipstick
10. Radiator cap
11. Automatic transaxle fluid level dipstick (Vehicle with Auto T/A)
12. Coolant reservoir cap
13. Battery

G010B01L-GAT

ENGINE COMPARTMENT (2.5 V6)

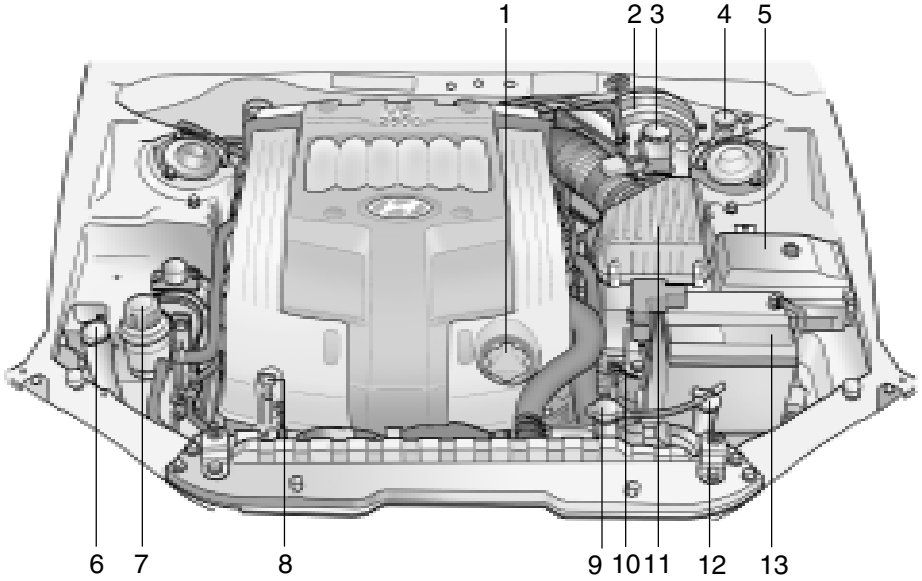

CAUTION:
When inspecting or servicing the engine, you should handle tools and other heavy objects carefully so that the plastic cover of the engine is not damaged.

HXGV625

1. Engine oil filler cap
2. Brake booster
3. Brake fluid reservoir
4. Clutch fluid reservoir (Vehicle with Manual T/A)
5. Under hood junction box
6. Windshield washer fluid reservoir
7. Power steering fluid reservoir
8. Engine oil level dipstick
9. Radiator cap
10. Auto transaxle fluid level dipstick (Vehicle with Auto T/A)
11. Filter element
12. Coolant reservoir cap
13. Battery

G020A02A-AAT

GENERAL CHECKS

Engine Compartment

The following should be checked regularly:

- o Engine oil level and condition
- o Transaxle fluid level and condition
- o Brake fluid level
- o Clutch fluid level
- o Coolant level
- o Windshield washer fluid level
- o Accessory drive belt condition
- o Coolant hose condition
- o Fluid leaks (on or below components)
- o Power steering fluid level and condition
- o Battery condition
- o Air filter condition

G020B01A-AAT

Vehicle Exterior

The following should be checked monthly:

- o Overall appearance and condition
- o Wheel condition and wheel nut torgue
- o Exhaust system condition
- o Light condition and operation
- o Windshield glass condition
- o Wiper blade condition
- o Paint condition and body corrosion
- o Fluid leaks
- o Door and hood lock condition
- o Tire pressure and condition (including spare tire)

G020C01A-AAT

Vehicle Interior

The following should be checked each time when the vehicle is driven:

- o Lights operation
- o Windshield wiper operation
- o Horn operation
- o Defroster, heater system operation (and air conditioning, if installed)
- o Steering operation and condition
- o Mirror condition and operation
- o Turn signal operation
- o Accelerator pedal operation
- o Brake operation, including parking brake
- o Manual transaxle operation, including clutch operation
- o Automatic transaxle operation, including "Park" mechanism operation
- o Seat control condition and operation
- o Seat belt condition and operation
- o Sunvisor operation

If you notice anything that does not operate correctly or appears to be functioning incorrectly, inspect it carefully and seek assistance from your Hyundai dealer if service is needed.

G030A01A-AAT

CHECKING THE ENGINE OIL

Engine oil is essential to the performance and service of the engine. It is suggested that you check the oil level at least once a week in normal use and more often if you are on a trip or driving in severe conditions.

G030B01A-GAT

Recommended Oil

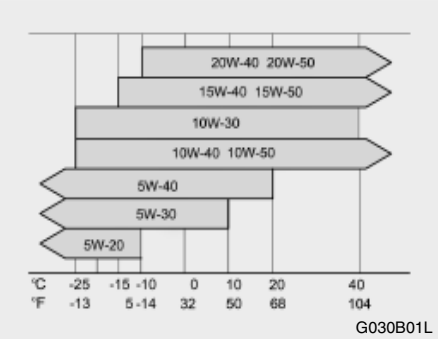

SH, SG or SG/CD (API) multi-grade and fuel efficient oil is recommended.

NOTE:

SAE 5W-20 is not recommended for sustained high speed vehicle operation.

G030C01A-AAT

To Check the Oil Level

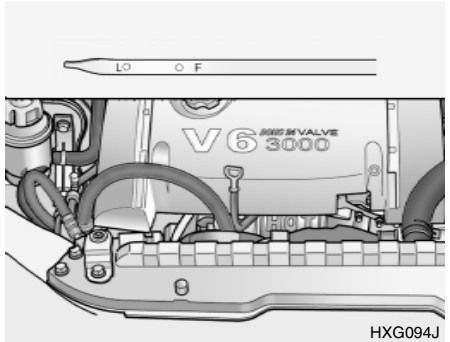

Before checking the oil, warm up the engine to the normal operating temperature and be sure your car is parked on level ground. Turn the engine off.

Wait a minute, then remove the dipstick, wipe it off, fully reinsert the dipstick and withdraw it again. Then note the highest level the oil has reached on the dipstick. It should be between the upper ("FULL") and lower ("LOW") range.

G030D01A-GAT

Adding Oil

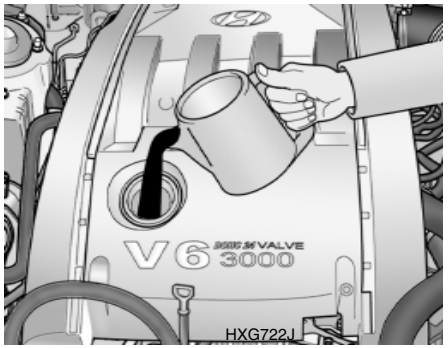

If the oil level is close to or below the "L" mark, add oil until it reaches the "F" mark. To add oil:

1. Remove the oil filler cap by turning it counterclockwise.
2. Add oil, then check the level again. Do not overfill.
3. Replace the cap by turning it clockwise.

The distance between the "F" and "L" marks is equal to about 1 liter of oil.

G350A01A-GAT

ENGINE OIL CONSUMPTION

Function of Engine Oil

Engine oil has the primary function of lubricating and cooling the inside of the engine.

Engine oil consumption

It is normal that an engine should consume some engine oil while normal driving. The cause of oil consumption in a normal engine are as follows;

- o Engine oil is used to lubricate pistons, piston rings and cylinders.
  A thin film of oil is left on the cylinder wall when a piston moves downwards in the cylinder. High negative pressure generated during engine operation sucks some of the oil into the combustion chamber.
  This oil with some oil of the cylinder wall is burned by the high temperature combustion gases during the combustion process.
- o The engine oil consumption is strongly effected by the viscosity and quality of oil, engine rpm and driving condition etc. The engine oil is more consumed under severe driving conditions such as high speeds and frequent acceleration and deceleration than normal driving condition.

G040A02A-AAT

CHANGING THE OIL AND FILTER

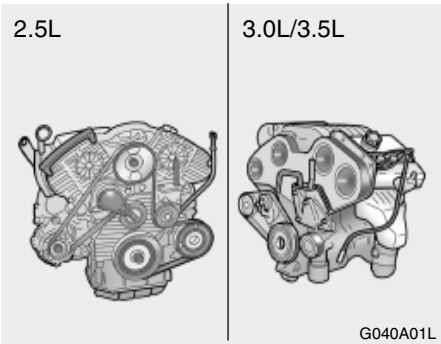

The engine oil and filter should be changed at those intervals specified in the maintenance schedule in Section 5. If the car is being driven in severe conditions, more frequent oil and filter changes are required.

The procedure for changing the oil and filter is as follows:

1. Park the car on level ground and set the parking brake. Start the engine and let it warm up until the needle on the coolant temperature gauge moves above the lowest mark. Turn the engine off and place the gear selector lever in "P" (automatic) or reverse gear (manual transaxle). Set the parking brake.
2. Open the hood and remove the engine oil filler cap.
3. Slide underneath the car and loosen the drain plug by turning it counterclockwise with a wrench of the proper size. Be sure that a drain pan is in position to catch the oil as it drains out, then remove the drain plug.

WARNING:
Be very careful when draining the engine oil as it may be hot enough to burn you!

4. When the oil has stopped draining, replace the drain plug using a new washer and retighten by turning it clockwise.

   Oil pan drain plug tightening torque : 3.5 ~4.0 kgf.m

5. Remove the oil filter by turning it counterclockwise with a oil filter wrench of the proper size. A certain amount of oil will come out when you remove the filter. So be sure to have your drain pan in place underneath it.
6. Install a new oil filter in accordance with the instructions on the carton or on the filter itself. Do not overtighten.

   Oil filter tightening torque : 1.2 ~ 1.6 kgf.m

   Be sure that the mounting surface on the engine is clean and that the old gasket is removed completely. Lubricate the new gasket on the filter with clean engine oil before installation.
7. Refill the crankcase with the recommended engine oil. Refer to the specification in chapter 9 for engine oil capacity.
8. Start the engine and check to be sure no oil is leaking from the drain plug or oil filter.
9. Shut off the engine and recheck the oil level.

NOTE:

Always dispose of used engine oil in an environmentally acceptable manner. It is suggested that it be placed in a sealed container and taken to a service station for reclamation. Do not pour the oil on the ground or put it in with the household trash.

WARNING:

Used motor oil may cause irritation or cancer of the skin if left in contact with the skin for prolonged periods of time. Wash your hands thoroughly with soap and warm water as soon as possible after handling used oil.

G050A01A-AAT

CHECKING AND CHANGING THE ENGINE COOLANT

WARNING:

Do not remove the radiator cap when the engine is hot. When the engine is hot, the engine coolant is under pressure and may erupt through the opening if the cap is removed. You could be seriously burned if you do not observe this precaution. Do not remove the radiator cap until the radiator is cool to the touch.

G050B01A-AAT

Recommended Engine Coolant

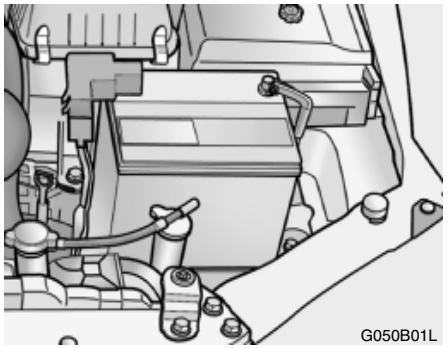

Use a high quality ethylene-glycol coolant in a 50/50 mix with water. The engine coolant should be compatible with aluminum engine parts. Additional corrosion inhibitors or additives should not be used. The cooling system must be maintained with the correct concentration and type of engine coolant to prevent freezing and corrosion.

Never allow the concentration of antifreeze to exceed the 60% level or go below the 35% level or damage to the coolant system may result. For proper concentration when adding or replacing the engine coolant, refer to the following table.

Ambient temperature °C (°F)	Engine coolant concentration	
	Antifreeze solution	Water
-15 (5)	35%	65%
-25 (-13)	40%	60%
-35 (-31)	50%	50%
-45 (-49)	60%	40%

G050C01A-AAT

To Check the Coolant Level

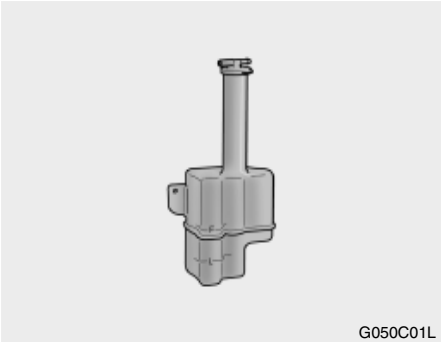

The coolant level can be seen on the side of the plastic coolant reservoir. The level of the coolant should be between the "LOW" and "FULL" lines on the reservoir when the engine is cool. If the level is below the "LOW" mark, add engine coolant to bring it up between "LOW" and "FULL". If the level is low, inspect for coolant leaks and recheck the fluid level frequently. If the level drops again, visit your Hyundai dealer for an inspection and diagnosis of the reason.

G050D02A-AAT

To Change the Engine Coolant

The engine coolant should be changed at those intervals specified in the vehicle maintenance schedule in Section 5.

CAUTION:

Engine coolant can damage the finish of your car. If you spill engine coolant on the car, wash it off thoroughly with clean water.

1. Park the car on level ground, set the parking brake and remove the radiator cap when cool.
2. Be sure your drain receptacle is in place. Open the drain cock on the radiator. Allow all the engine coolant to drain from the cooling system, then securely close the drain cock.

3. Check Section 9 for the capacity of the cooling system in your car. Then, following the manufacturer's directions on the engine coolant container, add the appropriate quantity of coolant to the radiator.

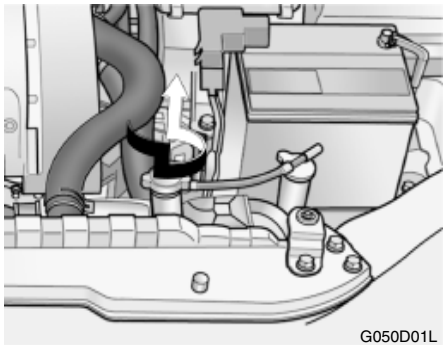
G050D01L

4. Turn the radiator cap counterclockwise without pressing down on it, until it stops. This relieves any pressure remaining in the cooling system. And remove the radiator cap by pushing down and turning counterclockwise.
   Now fill the radiator with clean demineralized or distilled water. Continue to add clean demineralized or distilled water in small quantities until the fluid level stays up in the radiator neck.

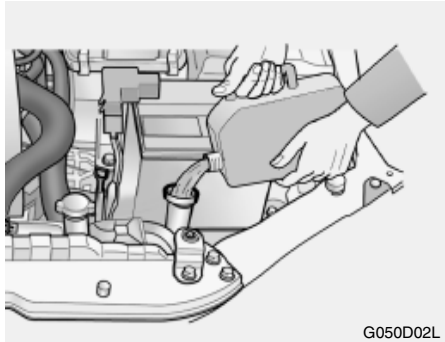
G050D02L

5. Start the engine, top off the radiator with water and then add engine coolant to the reservoir until the level is between "LOW" and "FULL".
6. Replace the radiator and reservoir caps and check to be sure the drain cocks are fully closed and not leaking.

WARNING:
The cooling fan is controlled by engine coolant temperature and may sometimes operate even when the engine is not running. Use extreme caution when working near the blades of the cooling fan so that you are not injured by a rotating fan blade. As the engine coolant temperature decreases, the fan will automatically shut off. This is a normal condition.

G060A02L-GAT

SPARK PLUGS

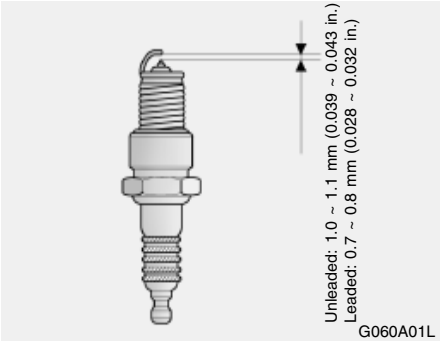

G060A01L

Your engine was originally equipped with platinum-tipped spark plugs. (If installed)
Platinum-tipped spark plugs will last longer than conventional type spark plugs and can be identified by blue lines on the ceramic shell.

NOTE:
Do not clean or regap platinum-tipped spark plugs.

G060B03L-GAT
Replacing the Spark Plugs

The spark plugs should be changed at the intervals specified in the vehicle maintenance schedule in Section 5 or whenever engine performance indicates they should be changed. Symptoms that suggest poor spark plug performance include engine misfiring under load, loss of fuel economy, poor acceleration, etc. When spark plugs are replaced, always use spark plugs recommended by Hyundai. The use of other spark plugs can result in loss of performance, radio interference or engine damage.

NOTE:
- **When replacing the spark plug, Genuine Hyundai Replacement Parts are recommended.**

Recommended Spark Plugs:

Type	Remark	
RC10PYP4(CHAMPION) RC10PYPB4(CHAMPION) PFR5N-11(NGK)	3.5L/3.0L	Un-leaded
RC10PYPB4(CHAMPION) PFR5N-11(NGK)	2.5L	
RC10YC4(CHAMPION) BKR5ES(NGK)	3.5L/3.0L 2.5L	Leaded

- **Spark plugs should be tightened firmly. Overtightening can damage the threads in the aluminum cylinder head. Also, leaving them too loose can cause the spark plug to get very hot and posibly result in damage to the engine.**
- **It is recommended that the spark plug should be changed by an authorized Hyundai dealer.**

WARNING:
It is recommended that the engine be cool or cold when changing the spark plugs. If the engine is hot, you could burn yourself on the insulated connector, the spark plug or the engine itself.

G070A02Y-AAT
CHANGING THE AIR CLEANER FILTER

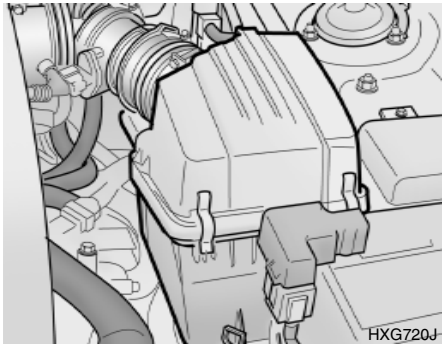

The replacement of air cleaner filter is performed in the following manner.

1. Unsnap the clips around the cover.
2. When this is done, the cover can be lifted off, the old filter removed and the new filter put in its place.

Genuine Hyundai Replacement Parts are recommended.

CAUTION:
Operating your vehicle without a proper air filter in place can result in excessive engine wear.

G080A02A-AAT
WINDSHIELD WIPER BLADES

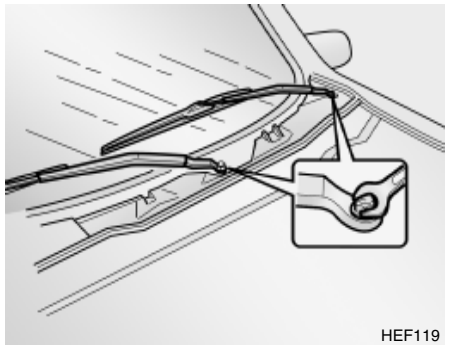

The wiper blades should be carefully inspected from time to time and cleaned to remove accumulations of road film or other debris. To clean the wiper blades and arms, use a clean sponge or cloth with a mild soap or detergent and water. If the wipers continue to streak or smear the glass, replace them with Genuine Hyundai Replacement parts or their equivalent.

NOTE:
- **Do not operate the wipers on dry glass. This can result in more rapid wear of the wiper blades and may scratch the glass.**
- **Keep the blade rubber out of contact with petroleum products such as engine oil, gasoline, etc.**

G090A01A-GAT
FILLING THE WASHER RESERVOIR

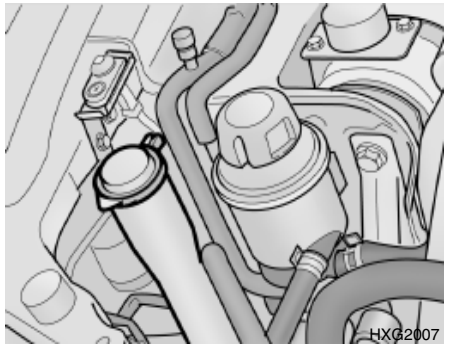

The washer fluid reservoir supplies fluid to the windshield washer system.

A good quality washer fluid should be used to fill the washer reservoir. The fluid level should be checked more frequently during bad weather or whenever the washer system is in more frequent use.
The capacity of the washer reservoir is 3.0 liters (3.2 U.S. quarts).

CAUTION:

- **Radiator antifreeze (engine coolant) should not be used in the washer system because it will damage the car's finish.**
- **The washer lever should not be pulled and the washer should not be operated if the washer reservoir is empty. This can damage the washer fluid pump.**

G100A03Y-GAT

CHECKING THE TRANSAXLE OIL (MANUAL)

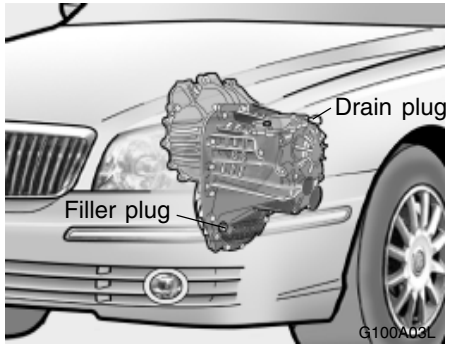

Transaxle lubricant in the manual transaxle should be checked at those intervals specified in the vehicle maintenance schedule in Section 5.

Recommended Oil

Use only HYUNDAI GENUINE PARTS MTF 75W/90 (API GL-4) in the manual transaxle.

Manual Transaxle Oil Capacity

The oil capacity of the manual transaxle is 2.1 liters (2.2 U.S. quarts).

WARNING:

It is always better to check the transaxle oil level when the engine is cool or cold. If the engine is hot, you should exercise great caution to avoid burning yourself on hot engine or exhaust parts.

G100B01A-AAT

To check the Transaxle Fluid Level

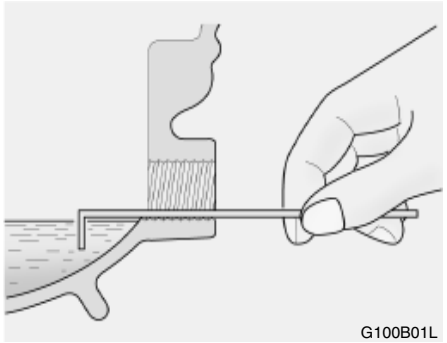

Park the car on level ground with the engine off.

1. Using a wrench of the correct size, loosen the oil filler plug by turning it counterclockwise and remove it with your fingers.
2. Use your finger or suitable tool to feel inside the hole. The oil level should be at its bottom edge. If it is not, check for leaks before adding oil. To refill the transaxle or bring the oil level up, add oil slowly until it reaches the proper level. Do not overfill.
3. Replace the plug, screw it in with your fingers and then tighten securely with the wrench.

G110A01A-AAT

CHECKING THE TRANSAXLE FLUID (AUTOMATIC)

Transaxle fluid in the automatic transaxle should be checked at those intervals specified in the vehicle maintenance schedule in Section 5.

G110B03A-AAT

Recommended Fluid

Your Hyundai automatic transaxle is specially designed to operate with DIAMOND ATF SP-III or SK ATF SP-III. Damage caused by a nonspecified fluid is not covered by your new vehicle limited warranty.

G110C02L-GAT

Transaxle Fluid Capacity

The fluid capacity of the automatic transaxle is 7.8 liters (2.5 V6)/8.5 liters (3.0/3.5 V6).

WARNING:

The transaxle fluid level should be checked when the engine is at normal operating temperature. This means that the engine, radiator, exhaust system etc., are very hot. Exercise great care not to burn yourself during this procedure.

G110D01L-AAT

To Check the Transaxle Fluid Level

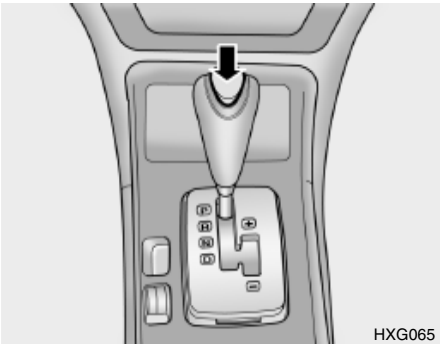

Park the car on level ground with the parking brake engaged. When the transaxle fluid level is checked, the transaxle fluid should be at normal operating temperature and the engine idling.

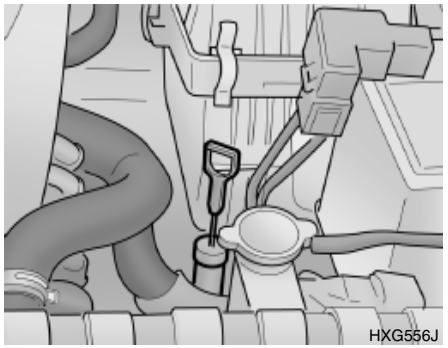

While the engine is idling, apply the brakes and move the gear selector lever from "P" to each of its other positions -- "R", "N", "D" -- and then return to "N". With the engine still idling:

1. Open the hood, being careful to keep hands, long hair and clothing clear of any moving parts.
2. Remove the transaxle dipstick, wipe it clean, reinsert the dipstick as far as it will go, then remove it again. Now check the fluid level on the dipstick. It should be in the "HOT" range on the dipstick.

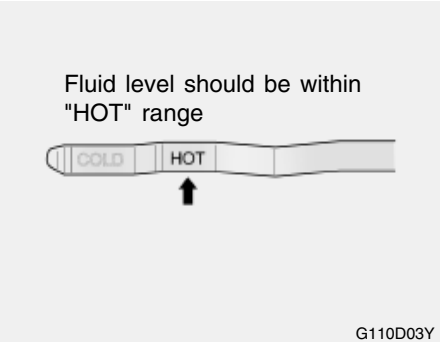

3. If the transaxle fluid level is low, use a funnel to add transaxle fluid through the dipstick tube until the level reaches the "HOT" range. Do not overfill.

WARNING:
The cooling fan is controlled by engine coolant temperature and may sometimes operate even when the engine is not running. Use extreme caution when working near the blades of the cooling fan, so that you are not injured by a rotating fan blade. As the engine coolant temperature decreases, the fan will automatically shut off. This is a normal condition.

G120A01A-AAT

CHECKING THE BRAKES

CAUTION:
Because brakes are essential to the safe operation of the car, it is suggested that they be checked and inspected by your Hyundai dealer. The brakes should be checked and inspected for wear at those intervals specified in the vehicle maintenance schedule in Section 5.

G120B01A-A AT

Checking the Brake Fluid Level

WARNING:
Use caution when handling brake fluid. It can damage your vision if it gets into your eyes. It will also damage your vehicle's paint if spilled on it and not removed immediately.

G120C02A-AAT

Recommended Brake Fluid

Use only hydraulic brake fluid conforming to DOT 3 or DOT 4 specifications in your braking system. Follow the instructions printed on the container.

G120D01A-AAT

To Check the Fluid Level

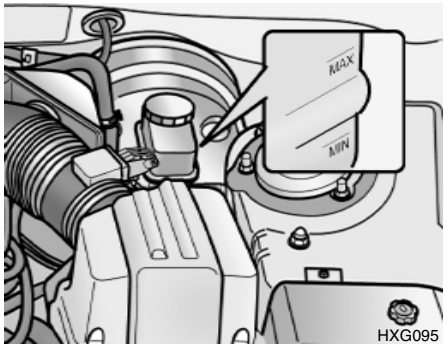

The fluid level in the brake fluid reservoir should be checked periodically. The level should be between the "MIN" and "MAX" marks on the side of the reservoir. If the level is at or below the "MIN" mark, carefully add fluid to bring it up to "MAX". Do not overfill.

G120E02A-AAT

Adding Brake Fluid

WARNING:

Handle brake fluid carefully. It can damage your vision if it gets into your eyes. Use only DOT 3 or DOT 4 specification fluid from a sealed container. Do not allow the fluid can or reservoir to remain open any longer than required. This will prevent entry of dirt and moisture which can damage the brake system and cause improper operation.

To add brake fluid, first wipe away any dirt then unscrew the fluid reservoir cap. Slowly pour the recommended fluid into the reservoir. Do not overfill. Carefully replace the cap on the reservoir and tighten.

G130A01A-AAT

CHECKING THE CLUTCH FLUID

To Check the Clutch Fluid

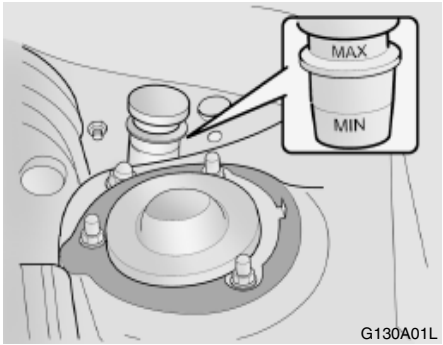

The clutch fluid level in the master cylinder should be checked when performing other under hood services. The system should be checked for leakage at the same time.

Check to make certain that the clutch fluid level is between the "MAX" and "MIN" level markings on the fluid reservoir. Fill as required. Fluid loss indicates a leak in the clutch system which should be inspected and repaired immediately. Consult your Hyundai dealer.

G130B02A-AAT

To Replace the Fluid

Recommended brake fluid conforming to DOT 3 or DOT 4 specification should be used. The reservoir cap must be fully tightened to avoid contamination from foreign matter or moisture.

NOTE:
Do not allow any other liquids to contaminate the brake fluid. Seal damage will result.

WARNING:
Use caution when handling brake fluid. It can damage your vision if you get it in your eyes. It will also damage your vehicle's paint if spilled on it and not removed immediately.

G140A01A-AAT

AIR CONDITIONING CARE

Keeping the Condenser Clean

The air conditioner condenser (and engine radiator) should be checked periodically for accumulation of dirt, dead insects, leaves, etc. These can interfere with maximum cooling efficiency. When removing such accumulations, brush or hose them away carefully to avoid bending the cooling fans.

G140B01A-AAT

Checking the Air Conditioning Operation

1. Start the engine and let it run at fast idle for several minutes with the air conditioning set at the maximum cold setting.
2. If the air coming out of the in-dash vents is not cold, have the air conditioning system inspected by your Hyundai dealer.

CAUTION:
Running the air conditioning system for extended periods of time with a low refrigerant level may damage the compressor.

G140C01A-AAT

Lubrication

To lubricate the compressor and the seals in the system, the air conditioning should be run for at least 10 minutes each week. This is particularly important during cool weather when the air conditioning system is not otherwise in use.

G140D01S-GAT

Checking the Compressor Drive Belt

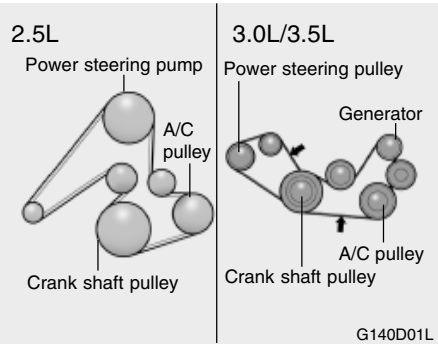

When the air conditioning is being used regularly, the compressor drive belt tension should be checked at least once a month.
To check the drive belt tension, press down on the belt halfway between the engine crankshaft and compressor pulleys. Pressing with your finger, you should not be able to deflect this belt anymore than 8.0 mm. If you have the instruments to check it with a force of 98N (22 lb.), the deflection should be approx. 8.0 mm (0.315 inches). If the belt is too loose, have it adjusted by your Hyundai dealer.

B145A01L-GAT

CHANGING THE AIR FILTER (For Evaporator and Blower Unit)

The air filter is located in front of the evaporator unit behind the glove box. It helps to decrease pollutants from entering the car and to filter the air.

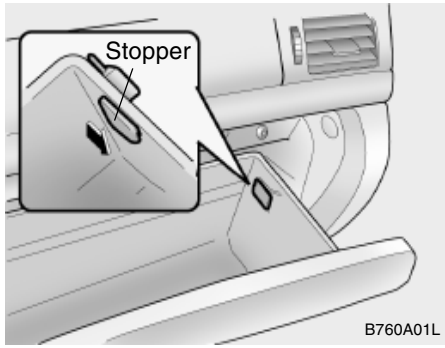

1. Open the glove box.
   Remove the stoppers on the both sides of the glove box.

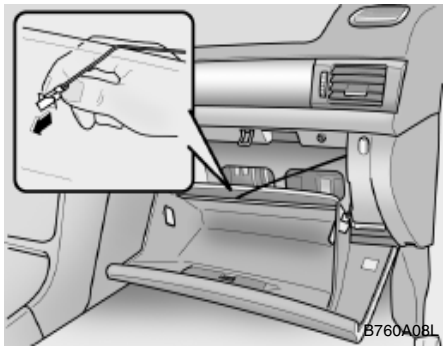

2. Lower the glove box down completely after taking out the damper strap from the hole.

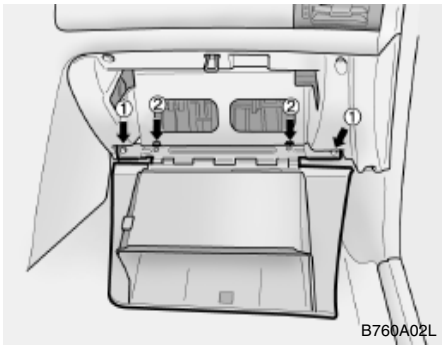

3. Remove the glove box mounting bolts (1) and screws (2) from the glove box assembly, and then detach the glove box assembly.

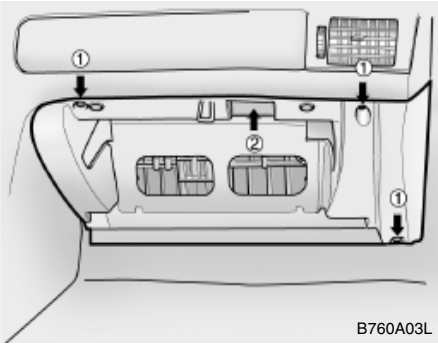

4. Remove the lower crash pad mounting screws (1) and nut (2), and then detach the lower crash pad.

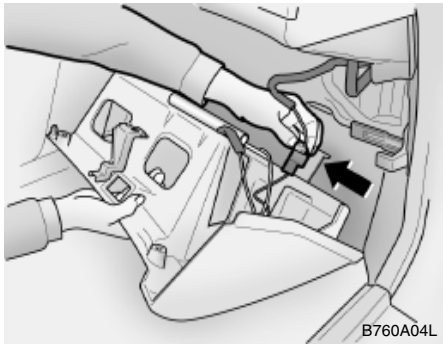

5. Disconnect the luggage compartment light connector

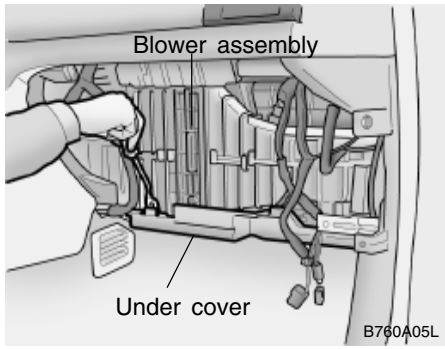

6. Remove the under cover from the blower assembly with pushing the cover toward the floor.

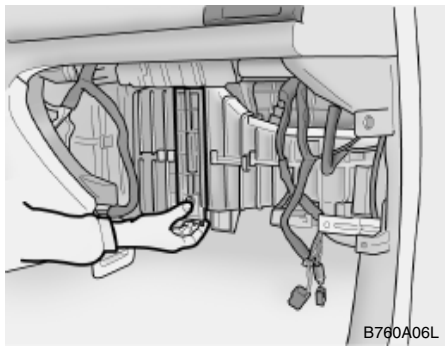

7. Remove the air conditioner filter cover.

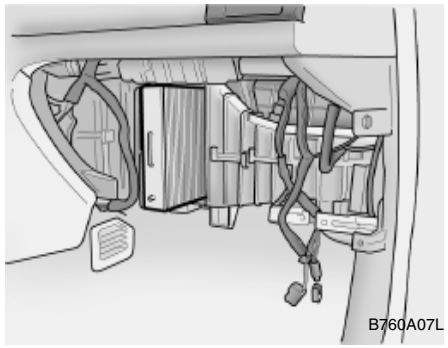

8. Replace the air conditioner filter with a new one.
9. Installation is the reverse order of disassembly.

G150A01A-GAT

CHECKING STEERING WHEEL FREEPLAY

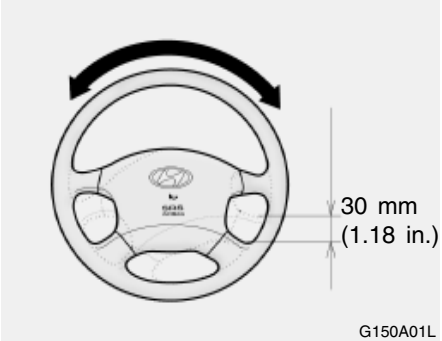

To check the steering wheel freeplay, stop the car with the wheels pointed straight ahead and gently move the steering wheel back and forth. Use very light finger pressure and be sensitive to changes in resistance that mark the limits of the freeplay. If the freeplay is greater than specified, have it inspected by your Hyundai dealer and adjusted or repaired if necessary.

G160A01A-GAT

CHECKING CLUTCH PEDAL FREEPLAY

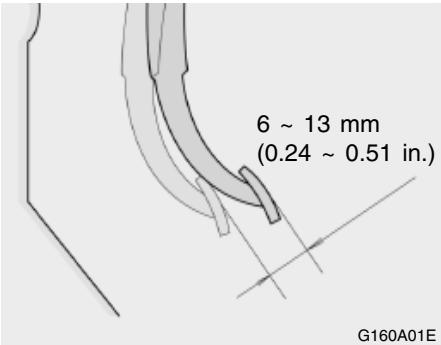

With the engine off, press lightly on the clutch pedal until you feel a change in resistance. This is the clutch pedal freeplay. The freeplay should be within the limits specified in the illustration. If it is not, have it inspected by your Hyundai dealer and adjusted or repaired if necessary.

G170A01A-GAT

CHECKING BRAKE PEDAL FREEPLAY

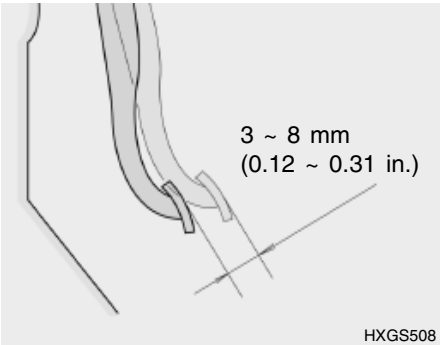

With the engine off, press down on the brake pedal several times to reduce the vacuum in the brake booster. Then, using your hand, press down slowly on the brake pedal until you feel a change in resistance. This is the brake pedal freeplay.
The freeplay should be within the limits specified in the illustration. If it is not, have it inspected by your Hyundai dealer and adjusted or repaired if necessary.

G180A01A-GAT

CHECKING BRAKE PEDAL CLEARANCE

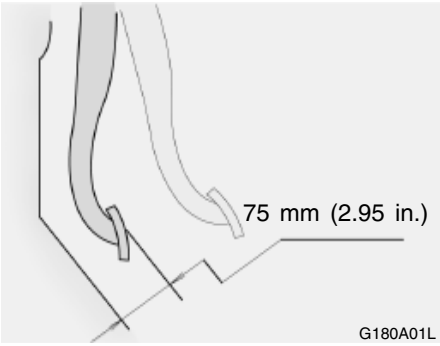

You need a helper to check the brake pedal clearance. With the engine running, have your helper press down on the brake pedal several times and then hold it down with a force of about 490 N (50 Kg, 110 lbs). The brake pedal clearance is the distance from the top surface of the brake pedal to the asphalt sheeting under the floor mat.

If the brake pedal clearance is not within the limits specified in the illustration, have it inspected by your Hyundai dealer and adjusted or repaired if necessary.

G190A01A-GAT

CHECKING DRIVE BELTS

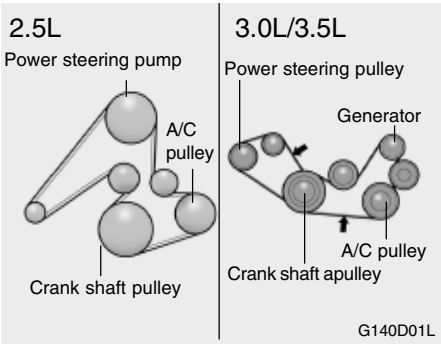

Drive belts should be checked periodically for proper tension and adjusted if necessary. At the same time, belts should be examined for cracks, wear, fraying or other evidence of deterioration and replaced if necessary.

Belt routing should also be checked to be sure there is no interference between the belts and other parts of the engine. After a belt is replaced, the new belt should be adjusted again after two or three weeks to eliminate slack resulting from initial stretching after use.

G200A01Y-GAT

CHECKING AND REPLACING FUSES

Replacing a Fusible Link

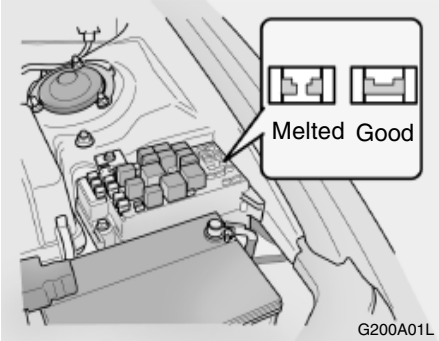

A fusible link will melt if the electrical circuits from the battery are ever overloaded, thus preventing damage to the entire wiring harness. (This could be caused by a short in the system drawing too much current.) If this ever happens, have a Hyundai dealer determine the cause, repair the system and replace the fusible link. The fusible links are located in a under hood junction box for easy inspection.

CAUTION:
When replacing a fusible link, never use anything but a new fusible link with the same or lower amperage rating. Never use a piece of wire or a higher-rated fusible link. This could result in serious damage and create a fire hazard.

G200B01Y-GAT

Replacing Accessory Fuse

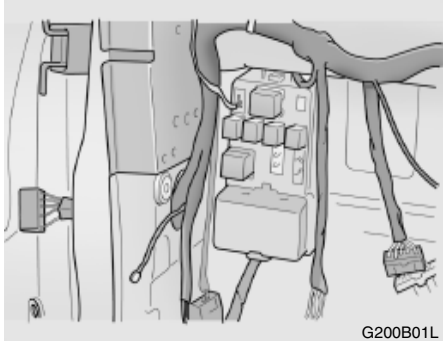
G200B01L

The instrument panel junction box for the lights and other electrical accessories will be found low on the dashboard on the driver's side. Inside instrument panel junction box you will find a list showing the circuits protected by each fuse.
If any of your car's lights or other electrical accessories stop working, a blown fuse could be the reason. If the fuse has burned out, you will see that the metal strip inside the fuse has burned through. If you suspect a blown fuse, follow this procedure:

1. Turn off the ignition and all other switches.
2. Open the instrument panel junction box and examine each fuse. Remove each fuse by pulling it toward you (a small "fuse puller" tool is contained in the fuse box to simplify this operation).
3. Be sure to check all other fuses even if you find one that appears to have burned out.

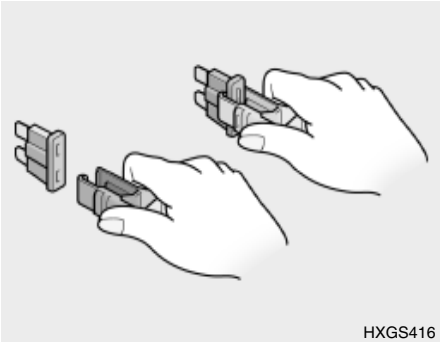
HXGS416

4. Replace the blown fuse by pressing a new fuse of the same rating into place. The fuse should be a snug fit. If it is not, have the fuse clip repaired or replaced by a Hyundai dealer. If you do not have a spare fuse, you may be able to borrow a fuse of the same or lower rating from an accessory you can temporarily get along without (the radio or cigarette lighter, for example). Always remember to replace the borrowed fuse.

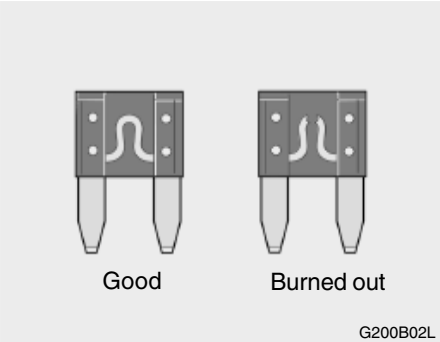

CAUTION:
A burned-out fuse indicates that there is a problem in the electrical circuit. If you replace a fuse and it blows as soon as the accessory is turned on, the problem is serious and should be referred to a Hyundai dealer for diagnosis and repair. Never replace a fuse with anything except a fuse with the same or a lower amperage rating. A higher capacity fuse could cause damage and create a fire hazard.

NOTE:
See page 6-34 for the junction box descriptions.

G210A01A-AAT
CHECKING THE BATTERY

WARNING:
Batteries can be dangerous! When working with batteries, carefully observe the following precautions to avoid serious injuries.

The fluid in the battery contains a strong solution of sulfuric acid, which is poisonous and highly corrosive. Be careful not to spill it on yourself or the car. If you do spill battery fluid on yourself, immediately do the following:

- o If battery fluid is on your skin, flush the affected areas with water for at least 15 minutes and then seek medical assistance.
- o If battery fluid is in your eyes, rinse out your eyes with water and get medical assistance as soon as possible. While you are being driven to get medical assistance, continue to rinse your eyes by using a sponge or soft cloth saturated with water.
- o If you swallow battery fluid, drink a large quantity of water or milk followed by milk of magnesia, eat a raw egg or drink vegetable oil. Get medical assistance as soon as possible.

While batteries are being charged (either by a battery charger or by the vehicle's generator), they produce explosive gases. Always observe these warnings to prevent injuries from occurring:

- o Charge batteries only in a well ventilated area.
- o Do not permit flames, sparks or smoking in the area.
- o Keep children away from the area.

G210B01A-AAT
Checking the Battery

Keep the battery clean. Any evidence of corrosion around the battery posts or terminals should be removed using a solution of household baking soda and warm water. After the battery terminals are dry, cover them with a light coating of grease.

G220A01A-AAT

CHECKING ELECTRIC COOLING FANS

WARNING:
The cooling fan is controlled by engine coolant temperature and may sometimes operate even when the engine is not running. Use extreme caution when working near the blades of the cooling fan, so that you are not injured by a rotating fan blade. As the coolant temperature decreases the fan will automatically shut off. This is a normal condition.

G220B01A-AAT

Checking Engine Cooling Fan

The engine cooling fan should come on automatically if the engine coolant temperature is high.

G220C01A-AAT

Checking Condenser Cooling Fan

The condenser cooling fan should come on automatically whenever the air conditioning is in operation.

G230A03A-GAT

POWER STEERING FLUID LEVEL

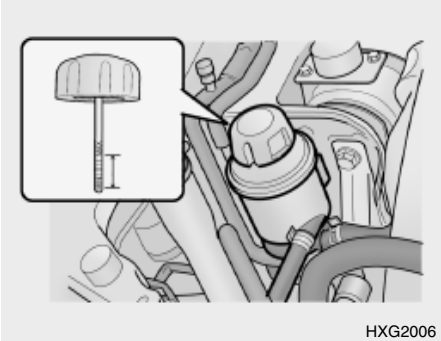

The power steering fluid level should be checked regularly.
To check the power steering fluid level, be sure the ignition is "OFF", then check to make certain that the power steering fluid level is between the "MAX" and "MIN" level markings on the fluid reservoir.

NOTE:
Grinding noise from the power steering pump may be heard immediately after the engine is started in extremely cold conditions (below - 20°C). In this case, if the noise stops during warm up, there is no abnormal function in the system. This is due to a power steering fluid characteristic in extremely cold conditions.

Recommended Fluid
Use PSF-3 type fluid.

NOTE:
Do not start the engine when the power steering oil reservoir is empty.

G240A01A-AAT

POWER STEERING HOSES

It is suggested that you check the power steering hose connections for fluid leakage at regular intervals.
The power steering hoses should be replaced if there is severe surface cracking, scuffing or worn spots. Deterioration of the hose could cause premature failure.

G290A02L-GAT

HEADLIGHT AIMING ADJUSTMENT
HID Type (If installed)

WARNING:
If you need headlight aiming adjustment, have your vehicle inspected by your Hyundai Dealer. Don't attempt to replace or inspect the HID headlight bulb to prevent danger of an electric shock.

General Type

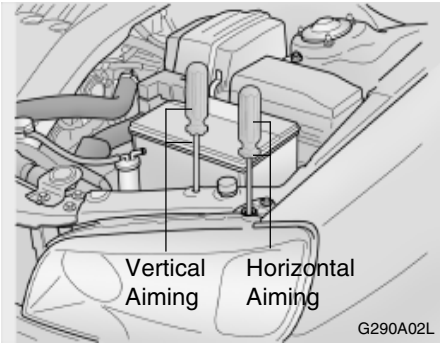

Before performing aiming adjustment, make sure of the following.

1. Keep all tires inflated to the correct pressure.
2. Place the vehicle on level ground and press the front bumper & rear bumper down several times. Place the vehicle at a distance of 3 m (118 in.) from the test wall.
3. See that the vehicle is unloaded (except for full levels of coolant, engine oil and fuel, and spare tire, jack, and tools). Have the driver or equivalent weight placed in driver's seat.
4. Clean the head light lenses and turn on the headlights (low beam).
5. Open the hood.
6. Draw the vertical line (through the center of each headlight) and the horizontal line (through the center of each headlight) on the aiming screen.

   And then, draw the parallel line at 30 mm (1.18 in.) place under the horizontal line.
7. Adjust each cut-off line of the low beam to the parallel line with a phillips screwdriver - VERTICAL AIMING.
8. Adjust each cut-off line of the low beam to each vertical line with a phillips screwdriver - HORIZONTAL AIMING.

G290B02L-GAT

Adjustment After Headlight Assembly Replacement

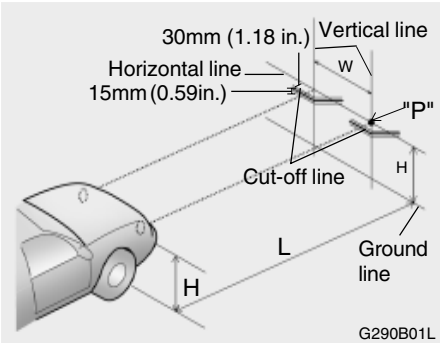

If the vehicle has had front body repair and the headlight assembly has been replaced, the headlight aiming should be checked using an aiming screen as shown in the illustration. Turn on the headlight switch. (Low Beam Position)

1. Adjust headlights so that main axis of light is parallel to center line of the body and is aligned with point "P" shown in the illustration.
2. Dotted lines in the illustration show the center of headlights.

SPECIFICATIONS:

"H"
Horizontal center line of headlights from ground
General type: 634 mm (24.96 in.)
HID type: 628 mm (24.72 in.)

"W"
Distance between each headlight center: 1,240 mm (48.8 in.)

"L"
Distance between the headlights and the wall that the lights are tested against : 3,000 mm (118.11 in.)

G260A01L-GAT

REPLACEMENT OF LIGHT BULBS

Before attempting to replace a light bulb, be sure the switch is turned to the "OFF" position.
The next paragraph shows how to reach the light bulbs so they may be changed. Be sure to replace the burned-out bulb with one of the same number and wattage rating.
See page 6-33 for the wattage descriptions.

CAUTION:
- **Keep the lights out of contact with petroleum products, such as oil, gasoline, etc.**
- **Be sure to replace the LED type equipped bulbs with assembly.**

G270A01L-GAT

HEADLIGHT AND FRONT TURN SIGNAL LIGHT

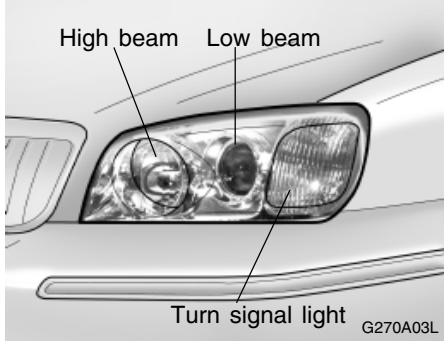

Replacement instructions:

1. Allow the bulb to cool. Wear eye protection.
2. Always grasp the bulb by its plastic base, avoid touching the glass.

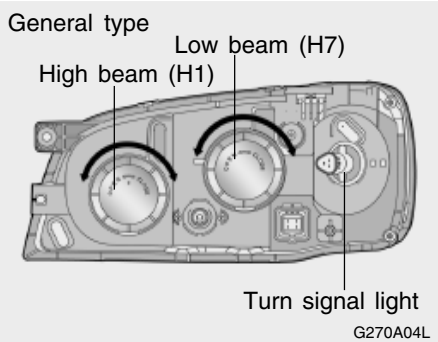

3. Turn the plastic cover counterclockwise and remove it.

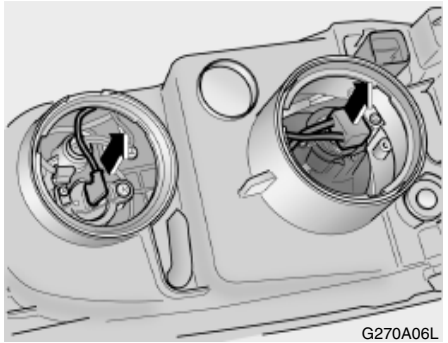

4. Disconnect the power cord from the bulb base in the back of the headlight.

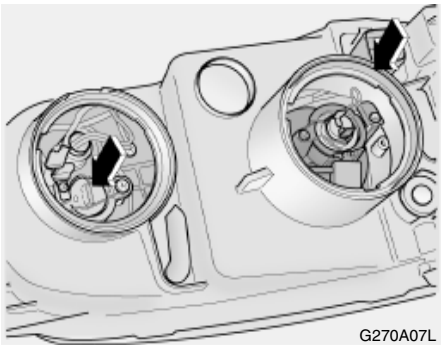

5. Push the bulb spring to remove the headlight bulb.
6. Remove the protective cap from the replacement bulb and install the new bulb by matching the plastic base with the headlight hole. Retighten the bulb spring and reconnect the power cord.
7. Use the protective cap and carton to promptly dispose of the old bulb.
8. Check for proper headlight aim.

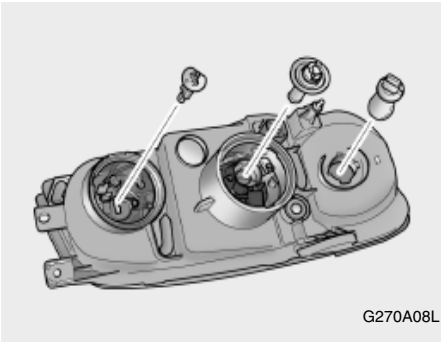

9. To replace the front turn signal light bulb, take out it from the bulb holder and install the new bulb.

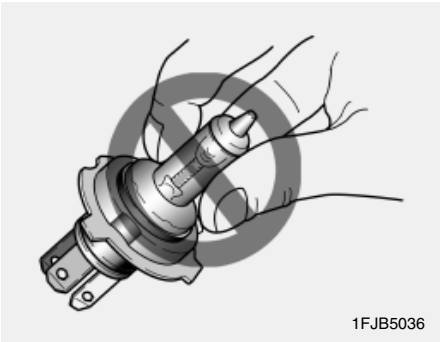

WARNING:

- **This halogen bulb contains gas under pressure and if impacted could shatter, resulting in flying fragments. Always wear eye protection when servicing the bulb. Protect the bulb against abrasions or scratches and against liquids when lighted. Turn the bulb on only when installing in a headlight. Replace the headlight if damaged or cracked. Keep the bulb out of the reach of children and dispose of the used bulb with care.**

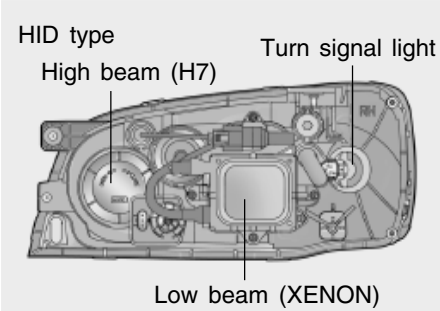

G270A05L

- **You can replace the high beam (H1 or H7) and front turn signal light. The replacement instruction is same with the general type's one. But you must not replace or inspect the low beam (XENON bulb). It has a danger of an electric shock. If the low beam (XENON bulb) is not working, have your vehicle inspected by your Hyundai Dealer.**

G270I01L-GAT

FRONT FOG LIGHT

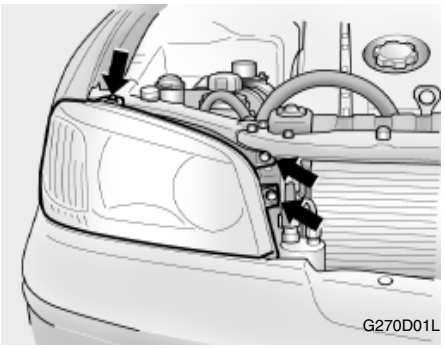
G270D01L

1. Remove the headlight assembly mounting bolts.

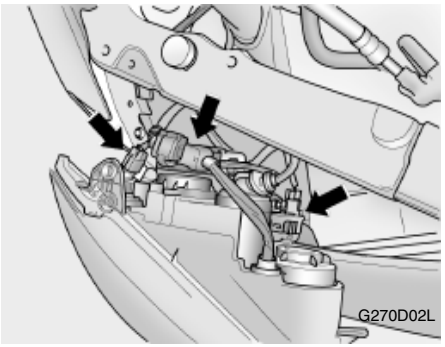
G270D02L

2. Disconnect the power cord from the bulb base in the back of the headlight.

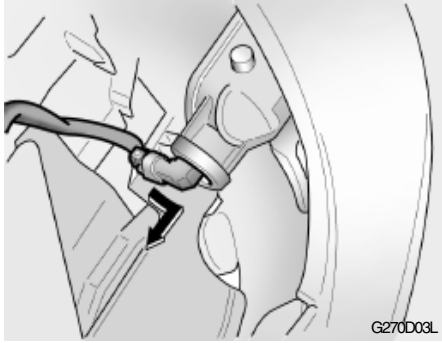

3. Take out front fog light from the bulb holder by turning it counter-clockwise.

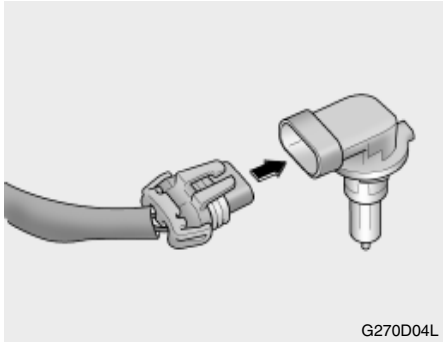

4. Disconnect the power cord from the bulb.
5. Replace to the new bulb.

G270D01L-GAT

REAR COMBINATION LIGHT (Stop /Tail Light and Rear Turn Signal Light)

1. Open the trunk lid.

2. Remove the cover on the inside of rear luggage trim by unscrewing the screws.

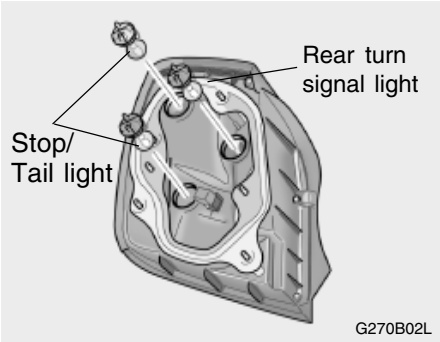

3. To replace the rear combination light (stop/tail light and rear turn signal light), take out it from the bulb holder and install the new bulb.

G270J01L-GAT

BACK UP LIGHT

1. Remove the trunk lid trim.

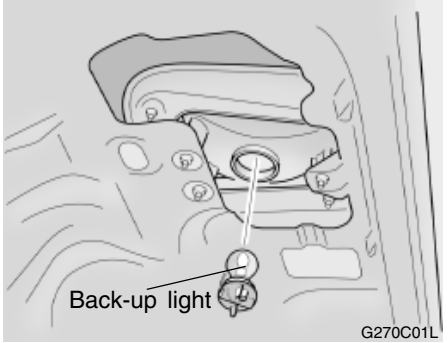

2. To replace the back-up light, take out it from the bulb holder and install the new bulb.

G270C01L-GAT

LUGGAGE COMPARTMENT LIGHT

1. Open the trunk lid.

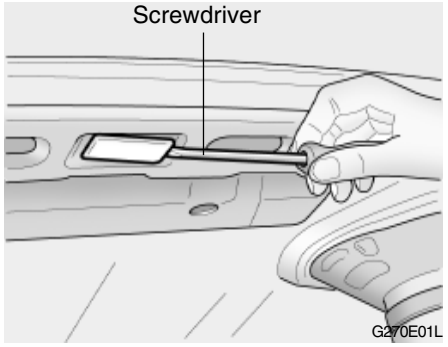

2. Remove the luggage compartment light cover on the rear package tray panel with a blade screwdriver.

3. Disconnect the power cord.

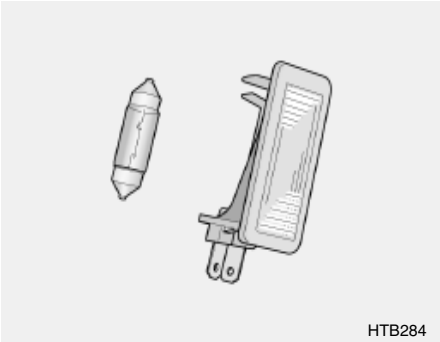

4. Replace to the new bulb.

G270E01L-GAT

SIDE REPEATER LIGHT

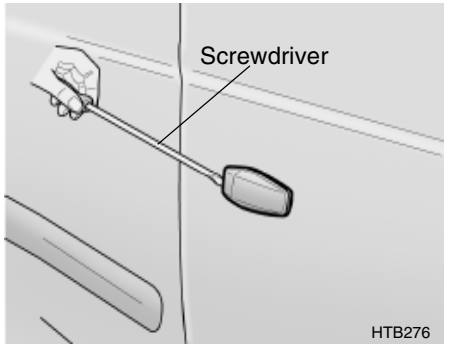

1. Remove the side repeater light cover with a blade screwdriver.

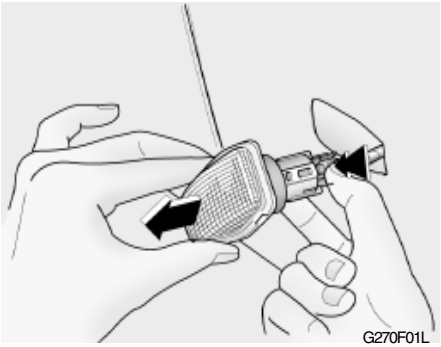

2. Disconnect the power code.

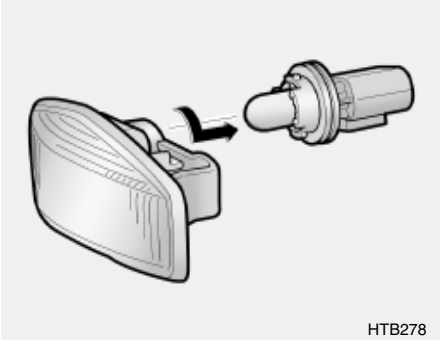

3. Replace to the new bulb.

G270G01L-GAT

INTERIOR LIGHT

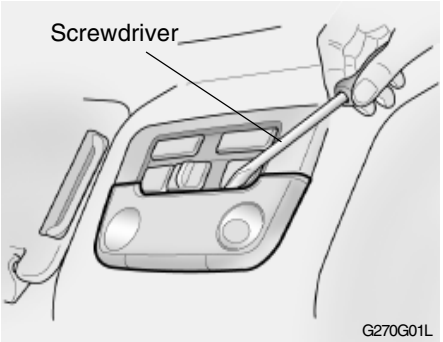

1. Remove the plastic cover with a blade screwdriver.

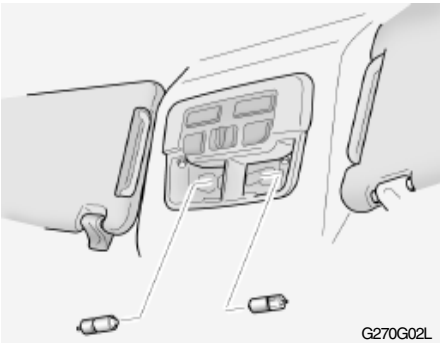

2. Replace to the new bulb.

G270K01L-GAT

GLOVE BOX ILLUMINATED LIGHT

1. Open the glove box.

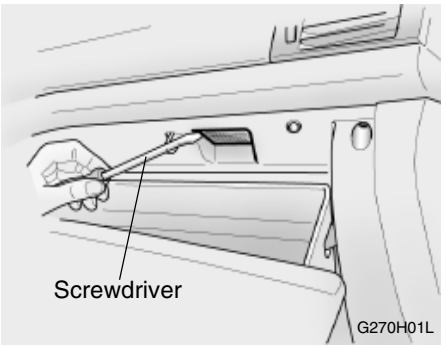

2. Remove the glove box illuminated light cover with a blade screwdriver.

3. Disconnect the power cord.

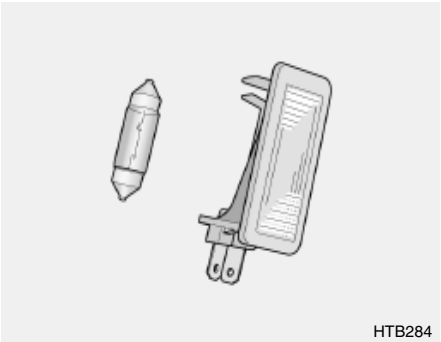

4. Replace to the new bulb.

G280A02L-GAT

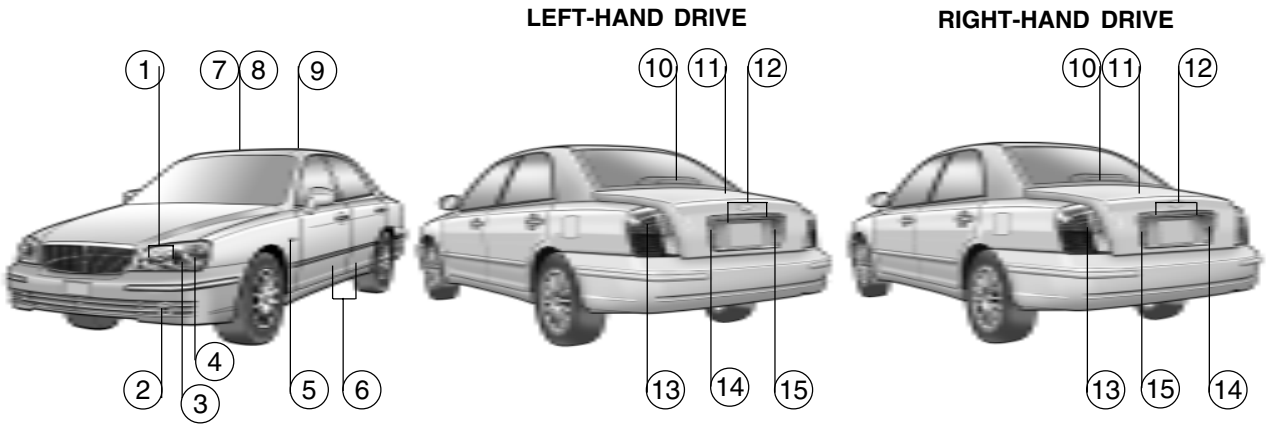

G280A02L

No.	Part Name	Wattage	No.	Part Name	Wattage
1	Head Light (High/Low)	55(H1)/55(H7)	10	High Mounted Rear Stop Light (If installed)	3.2 (LED Type)
	HID Head Light (High/Low) (If installed)	55(H7)/35(XENON)	11	Luggage Compartment Light	5
2	Front Fog Light	55	12	License Plate Light	5
3	Front Position Light	5	13	Rear Combination Light	
4	Front Turn Signal Light	21		Stop/Tail Light	21/5
5	Side Repeater Light	5		Turn Signal Light	21
6	Door Courtesy Light	5	14	Rear Fog Light (E.C only)	6.9 (LED Type)
7	Front Map Light	5		Back-up Light (except E.C)	21
8	Front Overhead Console Light (With Sunroof)	5	15	Back-up Light	21
9	Rear Room Light	10			

G200C01L-GAT

JUNCTION BOX DESCRIPTION

Under Hood Junction Box

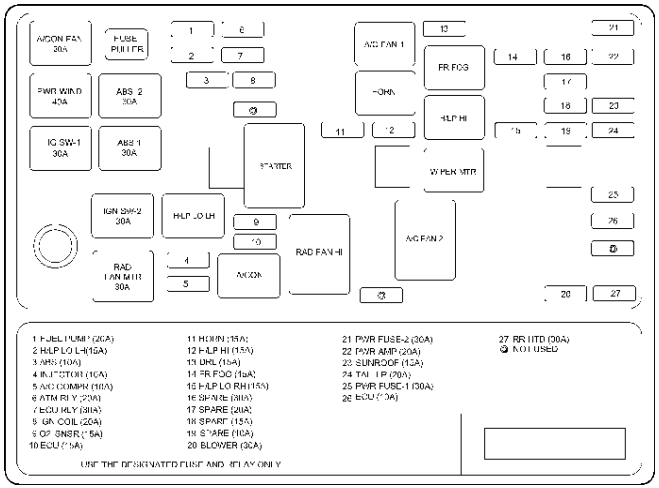

G200C01L

NOTE:

Not all junction box description in this manual may be applicable to your vehicle. It is accurate at the time of printing. When you inspect the junction box on your vehicle, refer to the junction box label.

DESCRIPTION	FUSE RATING	PROTECTED COMPONENTS
FUEL PUMP	20A	Fuel pump relay
HEAD LIGHT(Lo-LH)	15A	Head light relay (Low-LH)
ABS	10A	ABS controls, Cruise control module, ETS control module
INJECTOR	10A	Limp home valve, ETS controls, Injector
A/C COMPRESSOR	10A	A/C relay
A/T	20A	A/T control relay, TCM, Engine control relay
MAIN	30A	MFI controls
IGNITION COIL	20A	Ignition coil, A/T pulse generator, ECM, Ignition failure sensor, E/TCM
OXYGEN SENSOR	15A	ETS relay, MFI controls
EGR	15A	A/C relay, MFI controls, EGR solenoid
HORN	10A	Horn relay
HEAD LIGHT(HI)	15A	Head light relay (High)
HEAD LIGHT(Lo-RH)	20A	HID head light relay
DRL	15A	DRL control module, Siren
FOG LIGHT	15A	Fog light relay
DIODE 1		-
SPARE	30A	-
SPARE	20A	-
SPARE	15A	-
SPARE	10A	-
DIODE 2		-
BLOWER	30A	Blower relay
POWER FUSE 2	30A	Fuse 4, 20, 24, 25
POWER AMP	20A	Audio amp module
SUNROOF	15A	Data link connector, Sunroof relay, Home link connector
TAIL LIGHT	20A	Tail light relay
POWER FUSE 1	30A	Fuse 1, 7, 17, 18, 19
ECU	10A	ETS control module, ECM, E/TCM, Generator
REAR DEFOGGER	30A	Rear window defogger relay
CONDENSER	20A	A/C fan relay #1
POWER WINDOW	40A	Power window relay, IMS controls
IGNITION1/2	30A/30A	Ignition switch
ABS 1/2	30A/30A	ABS controls
RADIATOR	30A	Radiator fan relay

G200D01L-GAT

Instrument Panel Junction Box

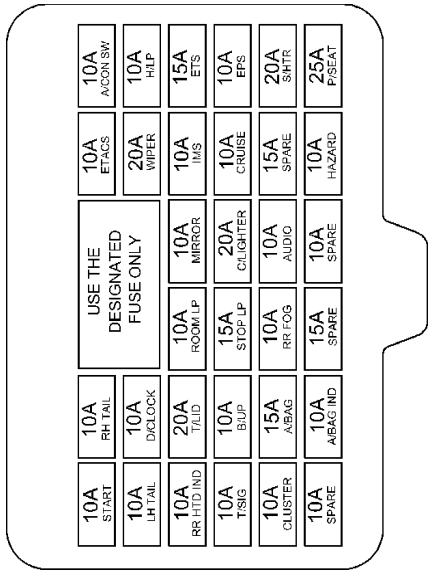

G200D01L

DESCRIPTION	FUSE RATING	PROTECTED COMPONENTS
P/SEAT	25A	Power seat
S/HTR	20A	Seat warmer
EPS	10A	EPS controls
ETS	15A	ETS relay
H/LP	10A	(HID) Head lights, DRL controls, AQS sensor
A/CON SW	10A	Blower & A/C controls
HAZARD	10A	Turn & Hazard controls
SPARE	15A	Not used
CRUISE	10A	Cruise switch, Instrument cluster
IMS	10A	Head light leveling switch, Rain sensor, IMS controls
WIPER	15A	Rain sensor relay, Wiper & Washer controls
ETACS	10A	Home link connector, Left (Right) vanity lights, Sunroof, Blower & A/C controls, Electronic chrome mirror
SPARE	10A	Not used
AUDIO	10A	Audio
C/LIGHTER	20A	Front (Rear) cigarette lighter, Accessory socket
MIRROR	10A	IMS controls, Driver door module, Rheostat
SPARE	15A	Not used
RR FOG	10A	Rear for light relay
STOP LP	15A	Stop lights, Left (Right) personal lights, Left (Right) rear door lights
ROOM LP	10A	Door warning & Ignition key illumination, Courtesy lights
A/BAG IND	10A	Instrument cluster
A/BAG	15A	SRS controls
B/UP	10A	Automatic transaxle controls, Back-up light switch, Vehicle speed sensor
T/LID	20A	Fuel filler door & Trunk lid opener, Driver (Assister) door module
D/CLOCK	10A	Multipurpose check connector, Audio, Immobiilizer controls, Trip computers, Digital clock, Blower & A/C controls, Instrument cluster
RH TAIL	10A	Left (Right) inside lights, (HID) Head lights, Fog light relay, Right HID turn signal light, Right rear combination light
SPARE	10A	Stop light failure relay
CLUSTER	10A	Immobilizer controls, TCS switch, Trip computers, Instrument cluster
T/SIG	10A	ETACM, Hazard switch, Auto light sensor
RR HTD IND	10A	Antenna, Blower & A/C controls, Left (Right) outside mirror motor & Folding motor
LH TAIL	10A	(HID) Head lights, Front (Rear) cigarette lighters, Left (Right) license lights, Left HID Turn signal light, Left rear combination light
START	10A	Burglar alarm relay, Transaxle range switch, Start relay, ETS controls

7. EMISSION CONTROL SYSTEM

Emission Control System 7-2
EGR System 7-2
Catalytic Converter 7-3

H010A01A-GAT

EMISSION CONTROL SYSTEM (If Installed)

Your Hyundai is equipped with an emission control system to meet all requirements of the Emission prohibition rules of your province.
There are three emission control systems which are as follows.

1) Crankcase emission control system
2) Evaporative emission control system
3) Exhaust emission control system

In order to assure the proper function of the emission control systems, it is recommended that you have your car inspected and maintained by an authorized Hyundai dealer in accordance with the maintenance schedule in this manual.

H010B01A-AAT

1. Crankcase Emission Control System

The positive crankcase ventilation system is employed to prevent air pollution caused by blow-by gases being emitted from the crankcase. This system supplies fresh air to the crankcase through the air intake hose. Inside the crankcase, the fresh air mixes with blow-by gases, which then pass through the PCV valve and into the induction system.

H010C02Y-GAT

2. Evaporative Emission Control System

The Evaporative Emission Control System is designed to prevent fuel vapors from escaping into the atmosphere.

Canister

While the engine is inoperative, fuel vapors generated inside the fuel tank are absorbed and stored in the canister. When the engine is running, the fuel vapors absorbed in the canister are drawn into the induction system through the purge control solenoid valve.

Purge Control Solenoid Valve

The purge control solenoid valve is controlled by the ECM; when the engine coolant temperature is low, and during idling, it closes, so that evaporated fuel is not taken into the surge tank. After engine warm-up, during ordinary driving, it opens so as to introduce evaporated fuel to the surge tank.

H010D01A-AAT

3. Exhaust Emission Control System

The exhaust emission control system is a highly effective system which controls exhaust emission while maintaining good vehicle performance.

H010E01Y-GAT

EGR System

This system helps control nitrogen oxides by recirculating a part of the exhaust gas into the engine, thereby reducing cylinder combustion temperature.

H020A01A-AAT

CATALYTIC CONVERTER

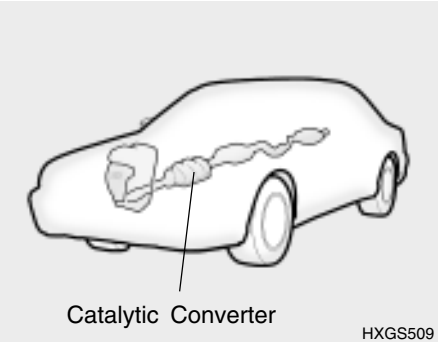

All Hyundai vehicles are equipped with a monolith type three-way catalytic converter to reduce the carbon monoxide, hydrocarbons and nitrogen oxides contained in the exhaust gas. Exhaust gases passing through the catalytic converter may cause it to operate at a very high temperature. The introduction of large amounts of unburned gasoline into the exhaust may cause the catalytic converter to overheat and create a fire hazard. This risk may be reduced by observing the following:

WARNING:

- **Use unleaded fuel only.**
- **Maintain the engine in good operating condition. Extremely high catalytic converter temperatures can result from improper operation of the electrical, ignition or multiport electronic fuel injection.**
- **If your engine stalls, pings, knocks, or is hard to start, have your Hyundai dealer inspect and repair the problem as soon as possible.**
- **Avoid driving with a very low fuel level. Running out of gasoline may cause the engine to misfire and result in damage to the catalytic converter.**
- **Avoid idling the engine for periods longer than 10 minutes.**
- **The vehicle should not be pushed or pulled to get started. This may cause the catalytic converter to overheat and create a fire hazard.**
- **Do not touch the catalytic converter or any other part of the exhaust system while the catalytic converter is hot. Shut off the engine, wait for at least one hour before touching the catalytic converter or any other part of the exhaust system.**
- **Remember that your Hyundai dealer is your best source of assistance.**
- **Do not stop your Hyundai over any combustible material such as grass, paper, leaves or rags. These materials might contact the hot catalytic converter and a fire might result.**

8. CONSUMER INFORMATION

Vehicle Identification Number (VIN) 8-2
Engine Number 8-2
Recommended Inflation Pressures 8-2
Snow Tires 8-3
Tire Chains 8-4
Tire Rotation 8-4
Tire Balancing 8-4
Tire Traction 8-5
When to Replace Tires 8-5
Spare Tire and Tools 8-5

I010A01A-GAT

VEHICLE IDENTIFICATION NUMBER (VIN)

The vehicle identification number (VIN) is the number used in registering your car and in all legal matters pertaining to its ownership, etc.
It can be found on the identification plate attached to the engine side of the firewall between the engine and passenger compartment.

I010B01A-AAT

Engine Number

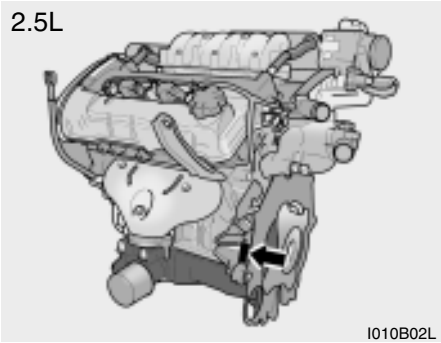

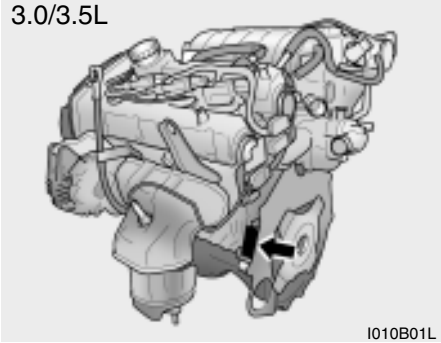

The engine number is stamped on the engine block as shown in the drawing.

I020A01A-AAT

TIRE INFORMATION

The tires supplied on your new Hyundai are chosen to provide the best performance for normal driving.

I030A01L-GAT

RECOMMENDED INFLATION PRESSURES

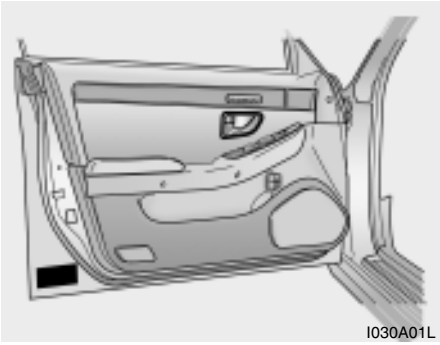

The tire label located on the driver's door edge gives the tire pressures recommended for your car.

RIM SIZE	TIRE SIZE	PRESSURE, kPa (PSI)			
		NORMAL LOAD		MAXIMUM LOAD	
		FRONT	REAR	FRONT	REAR
6.0x15	205/65R15 94V	220(32)	210(30)	240(35)	240(35)
6.0x16	205/60R16 96V	230(33)	210(30)	240(35)	240(35)

These pressures were chosen to provide the most satisfactory combination of ride comfort, tire wear and stability under normal conditions.
Tire pressures should be checked at least monthly. Proper tire inflation pressures should be maintained for these reasons:

- o Lower-than-recommended tire pressures cause uneven tread wear and poor handling.
- o Higher-than-recommended tire pressures increase the chance of damage from impacts and cause uneven tread wear.

CAUTION:
Always observe the following:
- **o Check pressures when the tires are cold. That is, after the car has been parked for at least three hours and hasn't been driven more than 1.6 km or one mile since starting up.**
- **o Check the pressure of your spare tire each time you check the pressure of other tires.**
- **o Never overload your car. Be especially careful about overloading if you equip your car with a luggage rack or car top carrier.**

I040A01S-GAT
SNOW TIRES

If you equip your car with snow tires, they should be the same size and have the same load capacity as the original tires. Snow tires should be installed on all four wheels; otherwise, poor handling may result.
Snow tires should carry 28 kPa (4 psi) more air pressure than the pressure recommended for the standard tires on the tire label on the driver's door edge, or up to the maximum pressure shown on the tire sidewall whichever is less.
Do not drive faster than 120 km/h (75 mph) when your car is equipped with snow tires.

I050A02Y-GAT

TIRE CHAINS

Tire chains should be installed on the front wheels. Be sure that the chains are installed in accordance with the manufacturer's instructions.
To minimize tire and chain wear, do not continue to use tire chains when they are no longer needed.

WARNING:
When driving on roads covered with snow or ice, drive at less than 30 km/h (20 mph).

I060A01Y-GAT

TIRE ROTATION

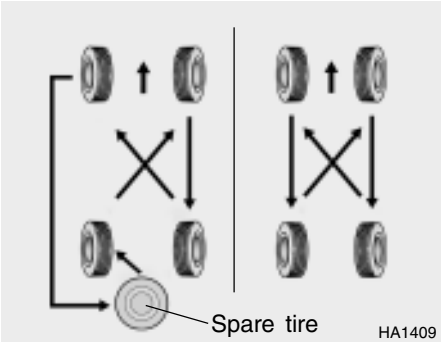

Tires should be rotated every 10,000 km (6,000 miles). If you notice that tires are wearing unevenly between rotations, have the car checked by a Hyundai dealer so the cause may be corrected.
After rotating, adjust the tire pressures and be sure to check wheel nut torque.

WARNING:
Do not mix bias-ply and radial-ply tires under any circumstances. This may cause dangerous handling characteristics that may cause death, serious injury, or property damage.

I070A01A-AAT

TIRE BALANCING

A tire that is out of balance may affect handling and tire wear. The tires on your Hyundai were balanced before the car was delivered but may need balancing again during the years you own the car.
Whenever a tire is dismounted for repair, it should be rebalanced before being reinstalled on the car.

I080A01A-AAT

TIRE TRACTION

Tire traction can be reduced if you drive on worn tires, tires that are improperly inflated or on slippery road surfaces. Tires should be replaced when tread wear indicators appear. To reduce the possibility of losing control, slow down whenever there is rain, snow or ice on the road.

I090A01Y-GAT

WHEN TO REPLACE TIRES

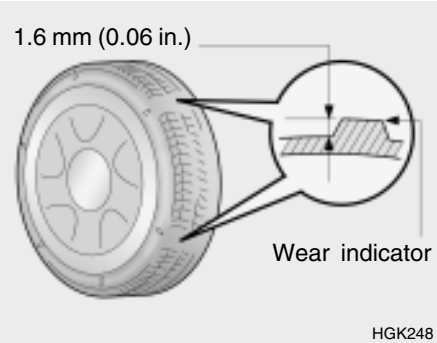

HGK248

The original tires on your car have tread wear indicators. The tread wear indicators appear when the tread depth is 1.6 mm (0.06 in.). The tire should be replaced when these appear as a solid bar across two or more grooves of the tread. Always replace your tires with those of the recommended size. If you change wheels, the new wheel's rim width and offset must meet Hyundai specifications.

WARNING:

- **Driving on worn-out tires is dangerous! Worn-out tires can cause loss of braking effectiveness, steering control and traction. When replacing tires, never mix radial and bias-ply tires on the same car. If you replace radial tires with biasply tires, they must be installed in sets of four.**
- **Using tires and wheels of other than the recommended sizes may cause unusual handling characteristics that may cause death, serious injury, or property damage.**

I100A01FC-GAT

SPARE TIRE AND TOOLS

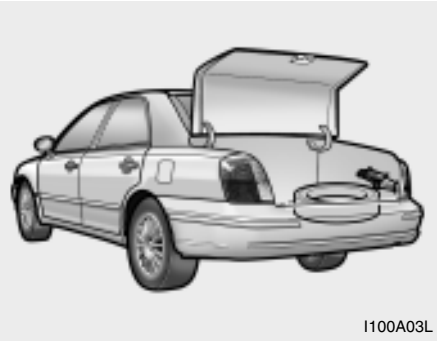

I100A03L

Your Hyundai is delivered with the following:

Spare tire and Wheel
Wheel nut wrench, Wrench bar, Spanner, Screwdriver
Jack

9. VEHICLE SPECIFICATIONS

Measurement 9-2
Engine 9-3
Lubrication Chart 9-4

J010A02L-GAT
MEASUREMENT

mm (in.)

Overall length		4,875 (191.8)
Overall width		1,800 (70.86)
Overall height		1,420 (55.9)
Wheel base		2,750 (108.2)
Wheel tread	Front	1,540 (60.6)
	Rear	1,530 (60.23)

J020A01L-GAT
POWER STEERING

Type	Rack and pinion
Wheel free play	0 ~ 30 mm (0 ~ 1.18 in.)
Rack stroke	146 mm (5.74 in.)
Oil pump type	Vane type

J060A01L-GAT
FUEL SYSTEM

Fuel tank capacity	70 liter

J030A03L-GAT
TIRE

Standard	205/65 R15 94V
Option	205/60 R16 96V

J040A02L-GAT
ELECTRICAL

Item	3.5 V6	3.0 V6	2.5 V6
Battery	MF 68AH (MF)		
Alternator	120A (13.5V)		110A (13.5V)

J050A01L-GAT
BRAKE

Type	Dual hydraulic with brake booster
Front brake type	Ventilated disc
Rear brake type	Solid disc
Parking brake	Cable operated on rear wheel

J070A02L-GAT

ENGINE

ITEMS		3.5 V6	3.0 V6	2.5 V6
		6-Cyl. V-type, DOHC	6-Cyl. V-type, DOHC	6-Cyl. V-type, DOHC
Bore x Stroke		93 x 85.8	91.1 x 76	84 x 75.0
Displacement (cc)		3,497	2,972	2,493
Firing order		1 - 2 - 3 - 4 - 5 - 6		
Valve clearance (warm engine)	Intake	Auto lash		
	Exhaust	Auto lash		
Spark plug gap	Unleaded	1.0 ~ 1.1 mm		
	Leaded	0.7 ~ 0.8 mm		
Idle speed (rpm)		700 ± 100		
Ignition timing		BTDC 5° ± 2°	BTDC 5° ± 2°	BTDC 12° ± 10°
Oil grade (API)		SH, SG or SG/CD ABOVE multigrade and fuel-efficient oil		

J080A03L-GAT

LUBRICATION CHART

Item		Oil & Grease Standard		Q'ty (liter)
Engine Oil		API SH or SG ABOVE	SAE 20W-40, 20W-50 (ABOVE -10°C)	Drain and refill (With oil filter) 3.5 L / 3.0 L : 4.3 2.5 L : 4.5
			SAE 15W-40, 15W-50 (ABOVE -15°C)	
			SAE 10W-30 (-25°C ~ 40°C)	
			SAE 10W-40, 10W-50 (ABOVE -25°C)	
			SAE 5W-20 *1, *2 (BELOW -10°C)	
			SAE 5W-30 *1 (BELOW 10°C)	
			SAE 5W-40 *1 (BELOW 20°C)	
		*1. Restricted to driving condition and dealing area		
		*2. Not recommended for sustained high speed vehicle operation		
Engine oil consumption		Normal driving condition		MAX. 1L / 1500 Km
		Severe driving condition		MAX. 1L / 1000 Km
Transaxle	Manual	HYUNDAI GENUINE PARTS MTF 75W/90 (API GL-4)		2.1
	Auto	DIAMOND ATF SP-III, SK ATF SP-III		7.8 (2.5L), 8.5 (3.0L / 3.5L)
Coolant		Ethylene glycol, base for aluminum		9.5 (2.5L), 11.2 (3.0L / 3.5L)
Power steering gear		PSF-3		1.0
Brakes and clutch fluid		DOT 3, DOT 4 or Equivalent		As required

10.INDEX

A
Accessory Box 1-68
Air Bag ..... 1-31 ~ 1-38
Air Cleaner Filter 6-11
Air Conditioning
  Care 6-17
  Operation 1-83, 6-17
  Switch 1-82
Antenna ..... 1-115 ~ 1-116
Ashtray 1-56
Audio Remote Control Switch 1-75
Automatic Heating and Cooling Control System
  ..... 1-84 ~ 1-89

B
Battery 2-16, 6-23
Bi-Level Heating 1-80
Brake
  Anti-lock brake system 2-11
  Checking the brakes 6-15
  Fluid 6-15
  Pedal clearance 6-21
  Pedal freeplay 6-20
  Practices ..... 2-13 ~ 2-14
Breaking-In your New Hyundai 1-3
Bulbs wattage 6-33

C
Care of Cassette Tapes ..... 1-114 ~ 1-115
Cassette Tape Player Operation (H940B, H940A)
  ..... 1-96 ~1-97, 1-104 ~ 1-105
Catalytic Converter 7-3
CD Auto changer 1-69
CD Auto changer (H940B, H940A)
  ..... 1-98 ~ 1-100, 1-109 ~ 1-111
Child-Protector Rear Door Lock 1-7
Child Restraint System ..... 1-23 ~ 1-29
Cigarette Lighter 1-55
Clock 1-53
Clutch
  Checking fluid 6-16
  Pedal freeplay 6-20
Combination Light
  Headlight flasher 1-50
  Headlight switch 1-48
  High-beam switch 1-49
  Lane change signal 1-48
  Turn signal operation 1-48
Compact Disc Player Operation (H940A). 1-106 ~ 1-108
Cooling Fans 6-24
Corrosion protection
  Cleaning the interior ..... 4-5 ~ 4-6
  Protecting your Hyundai from corrosion ..... 4-1 ~ 4-6
  Washing and waxing ..... 4-3 ~ 4-5
Cruise Control ..... 1-72 ~ 1-74

D
Defrosting / Defogging 1-81
Door
  Door locks 1-6
  Door courtesy light 1-70
  Locking and unlocking front doors with a key 1-6
Drink Holder 1-56
Drive Belts 6-18, 6-21
Driving
  Economical driving ..... 2-14 ~ 2-15
  Smooth cornering 2-15
  Winter driving 2-15

E
Emission Control System ..... 7-1 ~ 7-3
Engine
  Before starting the engine 2-3
  Compartment ..... 6-1~6-3
  Coolant ..... 6-8 ~ 6-10
  Coolant temperature gauge 1-45
  If the engine overheats 3-4
  Number 8-2
  Oil 6-6
  Starting 2-4
Engine Exhaust Can Be Dangerous 2-2

F
Fan Speed Control 1-77
Fog Light
  Front 1-47
  Rear ..... 1-47 ~ 1-48
Front Seats
  Adjustable front seats 1-11
  Adjustable headrests ..... 1-12 ~ 1-13
  Adjusting seat forward and rearward ..... 1-11 ~ 1-12
  Adjusting seatback angle 1-12
  Lumbar support control 1-13
  Seat cushion height adjustment 1-13
  Seat warmer 1-17
Fuel
  Capacity 9-2
  Gauge 1-45
  recommendations 1-2
Fuel Filler Lid
  Remote release 1-67
  Manual 1-67
Fuses ..... 6-21 ~ 6-23

G
General Checks 6-5
Glove Box 1-61

H
Hazard Warning System 1-52
Headlight Aiming Adjustment 6-25
Headlight Leveling Device System 1-72
Heating and Ventilation ..... 1-76 ~ 1-89
  Air flow control ..... 1-78 ~ 1-79, 1-87 ~ 1-89
  Air intake control ..... 1-77 ~ 1-78, 1-86 ~ 1-87
  Bi-level heating 1-80
  Fan speed control 1-77
  Temperature control 1-80
High-Mounted Rear Stop Light 1-66
Hood Release 1-68
Horn 1-70

I
Ignition Switch 2-3
Illuminated Ignition Switch 1-5
Immobilizer System ..... 1-4 ~ 1-5
Instrument Cluster and Indicator Lights ..... 1-39 ~ 1-44
Instrument Panel Light Control (Rheostat) 1-55
Intergrated Memory System (I. M. S) ..... 1-15 ~ 1-16
Interior Light
  Interior light ..... 1-60 ~ 1-61
  Map light 1-60
  Personal light 1-61
Intermittent Wiper 1-51

J
Jump Starting ..... 3-2 ~ 3-3

K
Key ..... 1-3 ~ 1-4
  If you lose your keys 3-12
  Positions ..... 2-3 ~ 2-4

L
Lubrication Chart 9-4
Luggage Net 1-69

M
Maintenance Intervals
  Explanation of scheduled maintenance items
  ..... 5-7 ~ 5-9
  Maintenance under severe usage conditions 5-6
  Scheduled maintenance ..... 5-4 ~ 5-5
  Service requirements 5-2
Mirrors
  Day-night inside rearview 1-63
  Outside rearview mirror heater 1-62

O
Odometer ..... 1-46 ~ 1-47
Outside rearview mirror 1-62

P
Parking Brake 1-64
Passenger Presence Detection ..... 1-35 ~ 1-36
Power Outlet 1-69
Power Seat 1-14

Adjusting seat forward and rearward 1-14
Adjusting seatbag angle 1-15
Seat cushion height adjustment 1-14
Power Steering Fluid Level 6-24

R
Rear Seat Fold Down ..... 1-17 ~ 1-18
Rear Window Defroster Switch ..... 1-52 ~ 1-53
Replacement of light bulbs 6-26

S
Seat
Front ..... 1-11 ~ 1-15
Seat Warmer 1-17
Seat Belts
3-Point system ..... 1-21 ~ 1-23
Adjustable height ..... 1-20 ~ 1-21
Adjusting your seat belt 1-21
Care of seat belts 1-20
Precautions 1-18
Spark Plugs ..... 6-10 ~ 6-11
Spectacle Case 1-61
Speedometer 1-45
Starting Procedure 2-4
Steering Wheel Freeplay 6-20
Steering Wheel Electric Tilt and Telescopic 1-71
Steering Wheel Tilt Lever 1-71
Stereo Radio Operation (H940B, H940A)
..... 1-93 ~ 1-95, 1-101 ~ 1-103
Stereo Sound System ..... 1-91 ~ 1-92
Sun Visor 1-70
Sunroof ..... 1-57 ~ 1-59

T
Tachometer 1-46
Theft-Alarm system ..... 1-8 ~ 1-9
Tires
Balancing 8-4
Chains 8-4
If you have a flat tire ..... 3-5 ~ 3-10
Information 8-2
Pressure ..... 8-2 ~ 8-3
Replacement 8-5
Rotation 8-4
Snow tires 8-3
Spare tire 3-5
Traction 8-4
Towing
A trailer (or vehicle) ..... 2-18 ~ 2-21
Emergency 3-12
If your car must be towed ..... 3-10 ~ 3-12
Traction Control System ..... 2-12 ~ 2-13
Transaxle
Automatic ..... 2-7 ~ 2-11
Automatic transaxle fluid checking ..... 6-14 ~ 6-15
Manual 2-5
Manual transaxle Oil checking ..... 6-13 ~ 6-14
Trip Computer ..... 1-53 ~ 1-55
Trip Odometer ..... 1-46 ~ 1-47
Trunk Lid ..... 1-64 ~ 1-66

V

Vehicle Identification Number 8-2

W

Warning Lights ..... 1-41 ~ 1-44
Power Windows ..... 1-10 ~ 1-11
Windshield Wiper and Washer Switch 1-50
Windshield Wiper Blades 6-12