PORSCHE
MOTORSPORT

Technical manual

911 GT3 Cup (991) MY 2015

Downloaded from www.Manualslib.com manuals search engine

Preface

This document should give you the opportunity to look up data, settings, und operating regulations, and to facilitate maintenance or repair of the vehicle.

We wish you many sporting successes with your 911 GT3 Cup (991).

Customer Sport

Dr. Ing. h.c. F. Porsche

Inc.

Motorsport Sales

Downloaded from www.Manualslib.com manuals search engine

Competition Vehicle 911 GT3 Cup (991) Model 2015

The design of this vehicle is specially configured for use in one-make cup competitions.

For understandable reasons, it cannot therefore be assumed that the standards set by our production vehicles are relevant for the car body design.

Porsche assumes no responsibility for compliance with regulations.

The vehicle is not approved for use on public roads and does not comply with the German Road Traffic Licensing Regulations.

Pictures, descriptions, and schematic drawings are used solely for illustrating the text. We assume no responsibility for the completeness and conformity of the contents with the prevailing sporting codes.

Due to the constant improvement of our products and the related documentation at the time of your purchase, a new version of this technical manual could be available. The latest Version is always accessible at the "Porsche Motorsport race car service information" database (PMRSI), and can be downloaded on the following homepage.

https://motorsport.porsche.com

Downloaded from www.Manualslib.com manuals search engine

Contact

International One-make Cup Series	**Mr. Michael Dreiser**	**Tel. +49 (0) 711 911 82684**
Assistent	Ms. Nicole Nagel	Tel. + 49 (0) 711 911 84900
		Fax. + 49 (0) 711 911 88920
Technical Support	Mr. Christoph Werner	Tel. + 49 (0) 711 911 82690
	Hr. Stefan Rometsch	Tel. +49 (0)711 911 89946
		Fax. + 49 (0) 711 911 89535
Porsche Mobil 1 Supercup	**Mr. Jonas Krauss**	**Tel. + 49 (0) 711 911 84042**
Assistent	Fr. Olivia Wegner	Tel. + 49 (0) 711 911 84096
		Fax. + 49 (0) 711 911 82920
Technical Support	Hr. Maximilian Müller	Tel. +49 (0)711 911 86183
		Fax. + 49 (0) 711 911 89535
Porsche Carrera Cup Germany	**Ms. Andrea Hagenbach**	**Tel. + 49 (0) 711 911 84041**
Assistent	Mr. Marco Vierkötter	Tel. + 49 (0) 711 911 84074
		Fax. + 49 (0) 711 911 82920
Technical Support	Hr. Maximilian Müller	Tel. +49 (0)711 911 86183
		Fax. + 49 (0) 711 911 89535
Sports Divisions Sales	**Mr. Karlheinz Kienle**	**Tel. + 49 (0) 711 911 82923**
	Mr. Klaus Lenzner	Tel. + 49 (0) 711 911 82423
	Mr. Christian Müller	Tel. + 49 (0) 711 911 89175
	Mr. Salvatore Scozzaro	Tel. + 49 (0) 711 911 83738
		Fax. + 49 (0) 711 911 82808

Downloaded from www.Manualslib.com manuals search engine

Contents

Preface 1

1 Engine 13

1.1 General 13

1.2 Specifications 14

1.3 Engine lubrication 15
1.3.1 Engine oil circuit 16
1.3.2 Oil level measurement 17
1.3.3 Refilling engine oil 17
1.3.4 Engine oil 17

1.4 Engine cooling system 18
1.4.1 Schematic diagram 18
1.4.2 Thermostat 18
1.4.3 Coolant 19
1.4.4 Filling the cooling system 19
1.4.5 Races at low temperatures 19

1.5 Intake system 20
1.5.1 Resonance flaps 20
1.5.2 Throttle 21

1.6 Work on the engine 22
1.6.1 Cylinder head installation 22
1.6.2 Flywheel tightening instructions 23
1.6.3 Setting the valve timing 23
1.6.4 Removing and installing the crankshaft seal – pulley side 24
1.6.5 Removing and installing the crankshaft seal – flywheel side 29

1.7 Engine tightening torque overview 36

1.8 Exhaust system 38

1.9 Fixation pre-silencer 39

Downloaded from www.Manualslib.com manuals search engine

1.10 Engine run time **40**
1.10.1 Behavior when exceeding the maximum speed 40

2 Powertrain **41**

2.1 General **41**

2.2 Clutch **42**
2.2.1 Installation instructions 42
2.2.2 Clutch wear 43
2.2.3 Fluid for clutch actuation 43
2.2.4 Central release mechanism 44

2.3 Sequential six-speed gearbox **45**
2.3.1 Overview 45
2.3.2 Technical specifications 46
2.3.3 Gear set 47
2.3.4 Drive 50
2.3.5 Oil circuit 52

2.4 Gear shift mechanism **53**
2.4.1 Gear shifting 54
2.4.2 Gear recognition 56
2.4.3 „Emergency gearbox“ switch 56
2.4.4 Maintenance 57

2.5 Drive shafts **58**
2.5.1 Tightening instructions 58

2.6 Gearbox run time **59**

2.7 Gearbox tightening torques **59**

Downloaded from www.Manualslib.com manuals search engine

2.8 Transmission dismantling 61

2.8.1 Dismantling of hang-on parts 61
2.8.2 Gear housing dismantling 62
2.8.3 Gear set removal 63
2.8.4 Dismantling the shift drum 64
2.8.5 Dismantling the locking sleeve 64
2.8.6 Oil supply 65
2.8.7 Cross shaft dismantling 66
2.8.8 Pinion shaft dismantling 69
2.8.9 Differential removal 70
2.8.10 Central clutch operator removal 71
2.8.11 Connecting shaft dismantling 71
2.8.12 Drive shaft dismantling 72
2.8.13 Bearing dismantling 73

2.9 Transmission assembly 75

2.9.1 Gearbox housing pre-assembly 75
2.9.2 Gear housing pre-assembly 86
2.9.3 Differential lid pre-assembly 92
2.9.4 Pinion shaft bearing assembly 93
2.9.5 Pinion shaft 94
2.9.6 Pinion shaft position adjustment 96
2.9.7 Assembly of gear sets 98
2.9.8 Vormontage Schaltwalze 104
2.9.9 Oil pump assembly 105
2.9.10 Reverse idler gear 106
2.9.11 Locking sleeve 107
2.9.12 Shift rod and shift forks 108
2.9.13 Suction tube assembly 109
2.9.14 Central clutch operator assembly 111
2.9.15 Cutted gear housing assembly 111
2.9.16 Determining cross shaft bearing adjusting disk Q1 113
2.9.17 Cross shaft setup 114
2.9.18 Cross shaft assembly 115
2.9.19 Differential setup 119
2.9.20 Gear housing assembly 126

2.10 Overview gearbox settings 130

Downloaded from www.Manualslib.com manuals search engine

3 Chassis 131

3.1 General 131
3.1.1 Wheel bearing 132
3.1.2 Wheel hub 133
3.1.3 Wheel nut 134
3.1.4 Locking piece 135

3.2 Front axle 136
3.2.1 Front axle cross member 137
3.2.2 Front axle transverse control arm 138
3.2.3 Longitudinal control arm 139
3.2.4 Front axle wheel mount 140
3.2.5 Front axle shock absorber 141
3.2.6 Front axle anti-roll bar 142

3.3 Rear axle 144
3.3.1 Rear axle control arm and tie rod 145
3.3.2 Fixation trailing arm bracket 146
3.3.3 Rear axle transverse control arm 147
3.3.4 Rear axle wheel mount 148
3.3.5 Rear axle shock absorber 149
3.3.6 Rear axle anti-roll bar 150
3.3.7 Rear axle side part 152

3.4 Wheel alignment 152
3.4.1 Preparatory measures 153
3.4.2 Vehicle ride height measuring points 154

3.5 Steering system 155
3.5.1 Bleeding the steering system 157

3.6 Rims and tire 158
3.6.1 Rim 158
3.6.2 Tires 158

3.7 Brake system 159
3.7.1 General 159
3.7.2 Front axle brake 161
3.7.3 Rear axle brake 162
3.7.4 Master cylinders 163
3.7.5 Changing the brake fluid 164

Downloaded from www.Manualslib.com manuals search engine

3.8 Brake pressure distribution 165
3.8.1 Balance beam basic setting 166
3.8.2 Calculating the brake power 168

3.9 Balance bar replacement kit 169
3.9.1 Replacing the trunnion 169
3.9.2 Replacing the balance bar 169

3.10 Performance setup 170

4 Bodywork 171

4.1 General 171

4.2 Front and side view 172

4.3 Rear view 174

4.4 Body shell 175
4.4.1 General 175
4.4.2 Weight distribution 177
4.4.3 Weight percentage of the Body -in-White 177
4.4.4 Body aluminum parts 178
4.4.5 Body features 179
4.4.6 Body steel parts 180
4.4.7 Materials overview 181
4.4.8 Roll cage 182
4.4.9 Recovery device 183

4.5 Aerodynamics 184
4.5.1 General 184
4.5.2 Rear wing 184
4.5.3 Additional aerodynamic improvements 184

4.6 Exterior mirrors 185

4.7 Roof 185

4.8 Air jack system 186

4.9 Doors 188

Downloaded from www.Manualslib.com manuals search engine

4.10 Trunk and engine lid **188**
4.10.1 Trunk lid 188
4.10.2 Engine lid 188

4.11 Windows **189**
4.11.1 Installing and removing the windshield 189
4.11.2 Preparing the window cutout for installation 193
4.11.3 Preparing the windshield for installation 194
4.11.4 Installing the windshield 195

4.12 Fenders **197**

4.13 Wheel cover **197**

4.14 Fuel system **198**
4.14.1 Fuel 199
4.14.2 Defueling 199
4.14.3 Tank installation 200

4.15 Repairing the body **200**
4.15.1 Repairing the front section 201
4.15.2 Replacing the front strut mount 215
4.15.3 Repairing the rear end 223

4.16 Thread repair kit **227**
4.16.1 Thread repair of chassis bolt connections 229

4.17 Installing roof assembly **245**

5 Interior **247**

5.1 General **247**

5.2 Drivers safety **248**
5.2.1 Seat 248
5.2.2 Seat rail tightening torques 249
5.2.3 Bucket seat tightening torques 250
5.2.4 Padding system 251

5.3 Steering wheel **252**

5.4 Cockpit ventilation **253**

Downloaded from www.Manualslib.com manuals search engine

6 Electrical system 255

6.1 General 255

6.2 Power supply 255
6.2.1 Battery 255
6.2.2 Generator 255
6.2.3 Battery master switch 256

6.3 Electrical system protection 257
6.3.1 Electrical system control unit IPS32 257
6.3.2 Fuse holder hydraulic pump 258

6.4 DME engine electronics 258
6.4.1 DME control unit 259
6.4.2 DME diagnosis 260
6.4.3 Carburation 260
6.4.4 Ignition system 260

6.5 Sensors 261
6.5.1 Sensor rated values 262
6.5.2 Optional sensors 263

6.6 ICD Display 264
6.6.1 General 264
6.6.2 Race page 266
6.6.3 Practice page 269
6.6.4 Warmup page 271
6.6.5 Vitals page 272
6.6.6 Pedals page 275
6.6.7 Additional information 277

6.7 Lights 283

6.8 Data bus system 284

6.9 Wiring harness 285

6.10 Ground connection roof antenna 285

6.11 Fire extinguisher 286
6.11.1 Testing the trigger switch 287
6.11.2 Battery change 287

Downloaded from www.Manualslib.com manuals search engine

6.12 Driver Control Systems **288**
6.12.1 Steering wheel 288
6.12.2 Center console 289
6.12.3 Windscreen wiper 290
6.12.4 Interior fan switch 290

7 Maintenance **291**

7.1 Engine **291**
7.1.1 Oil level measurement using the dipstick 291
7.1.2 Oil level measurement with display 292
7.1.3 Changing the engine oil 292
7.1.4 Refilling engine oil 293
7.1.5 Oil specification 293
7.1.6 Engine cooling system 294
7.1.7 Setting the valve timing 296
7.1.8 Engine tightening torques 297
7.1.9 Engine runtime 297

7.2 Fuel system **298**
7.2.1 Fuel 298
7.2.2 Fuel pump 298
7.2.3 Fuel extraction 298

7.3 Power transmission **300**
7.3.1 Gearbox 300
7.3.2 Clutch 301
7.3.3 Paddle shift 303
7.3.4 Drive shafts 304

7.4 Chassis **305**
7.4.1 Wheel nut 305
7.4.2 Locking piece 306
7.4.3 Wheel bearings 307
7.4.4 Wheel hub 307
7.4.5 Wheel rim 307
7.4.6 Brake system 308
7.4.7 Replacing the piston seal rings 308
7.4.8 Shock absorber/spring 310
7.4.9 Anti-roll bar 310
7.4.10 Steering system 311

7.5 Body **313**
7.5.1 Airjack system 313

Downloaded from www.Manualslib.com manuals search engine

7.6 Electrical system 314
7.6.1 Checks after wet races 314

7.7 Maintenance intervals 315
7.7.1 After 200 km (124 mi) or first test drive 315
7.7.2 After each session 315
7.7.3 After each weekend (sprint race) 316
7.7.4 After 3 – 4 race weekends (sprint races) 316
7.7.5 After 30 hours run time 316
7.7.6 After 50 hours run time 316

7.8 Special tools 911 GT3 Cup (991) 317

7.9 Partner contacts 319

Downloaded from www.Manualslib.com manuals search engine

1 Engine

1.1 General

The engine of the new 911 GT3 Cup (991) is based on the proven drive unit of the street-legal 911 GT3 RS and has been redesigned especially for use in motor sports. New features include the electronic accelerator and the accompanying throttle. Furthermore, the Bosch Motronic MS4.6 controller has been used as engine control.

The engine has a dry sump lubrication system including an engine-mounted oil tank. An oil-water heat exchanger integrated in the cooling circuit is used for oil cooling.

1.1.1

Downloaded from www.Manualslib.com manuals search engine

1.2 Specifications

Full load curves (key: red=torque, blue=power)

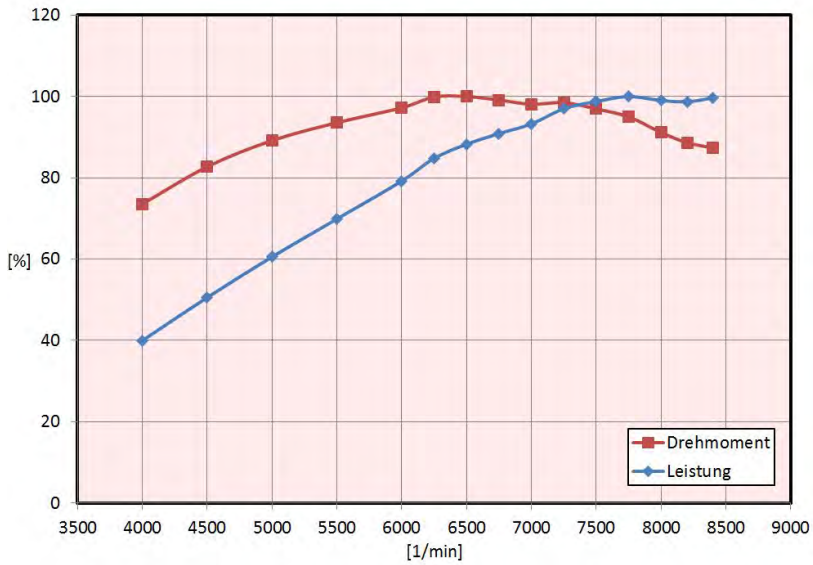

1.2.1

Engine specifications

Number of cylinders	6
Type	six-cylinder boxer engine
Valves/cylinders	4
Displacement	3,797 cm^3
Hole	102.7 mm
Stroke	76.4 mm
Compression	approx. 12 : 1
Maximum speed	8,500 rpm
Intake valve diameter	41 mm
Intake valve stroke	12.0 mm
Intake valve lobe center line	110° after TDC
Exhaust valve diameter	35.5 mm
Exhaust valve stroke	12.0 mm
Exhaust valve lobe center line	110° before TDC
Cooling	water-cooled
Lubrication	dry sump lubrication
	Oil/water-heat exchanger

Downloaded from www.Manualslib.com manuals search engine

1.3 Engine lubrication

The 911 GT3 Cup (991) is provided with dry sump lubrication. This type of lubrication system design ensures a consistant pressure oil supply to the engine components requiring lubrication in any driving situation. The oil tank, which is installed separately on the front side of the engine, always contains enough oil to supply the oil pump.

For regulation of the engine thermal conditions, an oil/water heat exchanger has been integrated in the engine's oil/water system.

Downloaded from www.Manualslib.com manuals search engine

1.3.1 Engine oil circuit

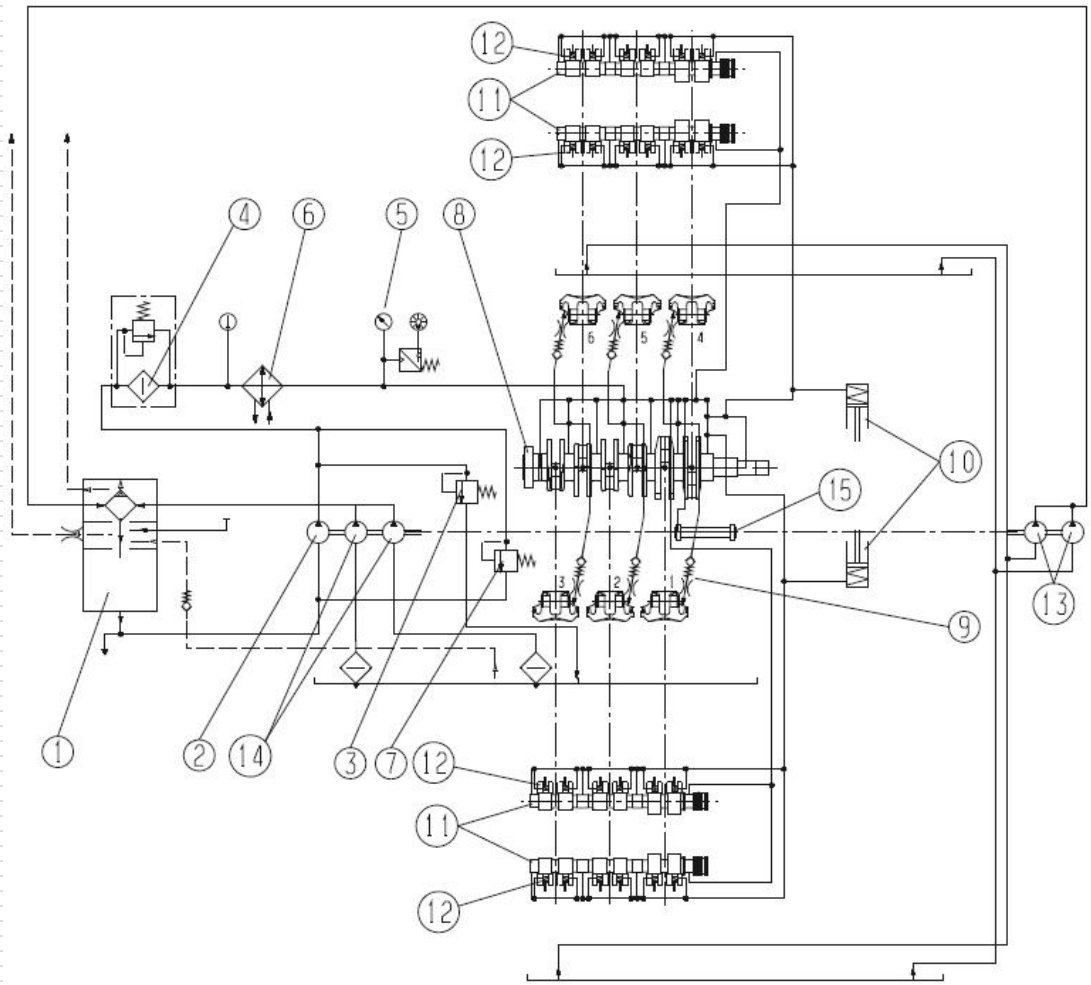

1.3.1.1

1 – Oil tank
2 – Positive displacement pump
3 – Safety valve
4 – Oil filter
5 – Pressure sensor
6 – Oil/water heat exchanger
7 – Pressure relief valve
8 – Crankshaft
9 – Injector
10 – Chain tensioner
11 – Camshaft
12 – Hydraulic valve lifter
13 – Suction pump, camshaft housing
14 – Crankcase vacuum pump
15 – Intermediate shaft

Downloaded from www.Manualslib.com manuals search engine

1.3.2 Oil level measurement

On the 911 GT3 Cup (991), the oil level is measured in the conventional way using the dipstick. The engine must be at operating temperature (80°C (176°F)) in order to ensure a correct measurement of the filling quantity.

See chapter 7.1

NOTE

If the oil level is too high, oil may penetrate into the intake system and damage the engine.

NOTE

When refilling engine oil, it should be taken into account that this oil only runs slowly through the dipstick guide tube into the oil tank. Therefore, wait a few minutes before measuring the oil level again.

1.3.3 Refilling engine oil

- New engine: 11.0 liter (11.6 qts.)
- With oil filter change: 8.3 liter (8.8 qts.)
- Without oil filter change: 8.1 liter (8.8 qts.)

1.3.4 Engine oil

When the engine is inspected by Porsche, the engine oil is always changed. The following specification is used for this purpose:

- Mobil 1 0W – 40

Downloaded from www.Manualslib.com manuals search engine

1.4 Engine cooling system

The cooling system ensures the engine's temperature during operation. The heat produced by combustion is released in a controlled way to the environment via three water radiators installed in the front, thus protecting the engine from overheating. Furthermore, two oil/water-heat exchangers are installed in the cooling circuit. These heat exchangers for the engine and the gearbox are used to set the oil temperatures of the assemblies to the operating temperature and to keep this temperature stable. The lid of the water expansion tank is equipped with a pressure regulating valve which opens at 1,4 bar. Check the system if there is a coolant loss or leaks are suspected. The adapter required for the test has to be screwed to the compensating tank; it can be obtained from Hazet.

Adapter: Hazet 4800-12A.

1.4.1 Schematic diagram

1 Side radiator, left
2 Central radiator
3 Side radiator, right
4 Gearbox heat exchanger
5 Engine heat exchanger
6 Cooling water compensating tank

di – Exhaust throttle

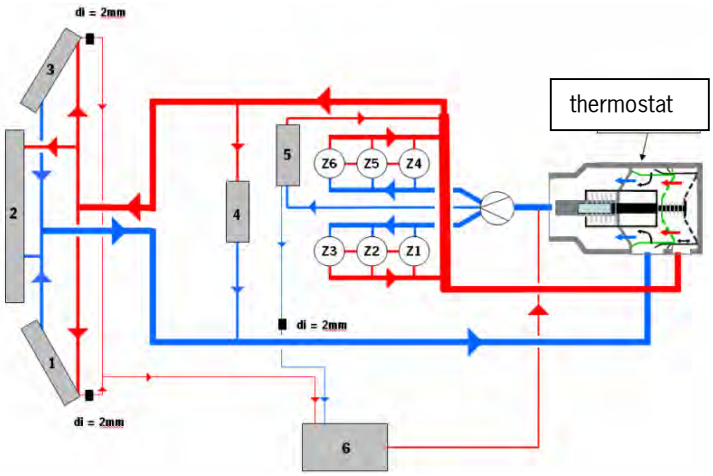

1.4.1.1

1.4.2 Thermostat

The thermostat integrated in the engine opens at a water temperature of 60° C (140° F). At approx. 72° C (162° F), the thermostat is fully open.

Downloaded from www.Manualslib.com manuals search engine

1.4.3 Coolant

Upon delivery, the cooling system is filled with 11 liters (11.6 qts.) of water and 11 liters (11.6 qts.) of low temperature/freezing protection, ensuring a low temperature/freezing protection up to -30° C (-22° F).

For all racing events, Porsche Motorsport recommends substituting the factory filled coolant with 20 liters (21 qts.) of water and 2 liters (2.1 qts.) of corrosion protection (spare part no. 997.106.907.90). Corrosion protection protects the water-carrying parts from corrosion, reduces cavitation, lubricates the water pump and raises the boiling point of the coolant.

NOTE

For support races to the Formula 1 world championship, the coolant has to be substituted as described below.

Approx. 20 liters (21 qts.) of water plus at least 2 liters (2.1 qts.) of corrosion protection, spare part no. 997.106.907.90

Filling quantity: 22 liter (23.2 qts.)

1.4.4 Filling the cooling system

Refer to chapter 7 „Maintenance“.

1.4.5 Races at low temperatures

For operations at low temperatures, the radiators much be masked in order to operate the engine at optimum operating temperature. The following procedure must be observed:

First, cover the central radiator with masking tape (starting from the top). If this is not sufficient, cover up to 2/3 of the two outer radiators (starting from the top). It is not permitted to cover the side radiators completely, as their exhaust is used for cooling the brakes.

Downloaded from www.Manualslib.com manuals search engine

1 – Vacuum cell (large flap)

2 – Vacuum cell (small flap)

1.5 Intake system

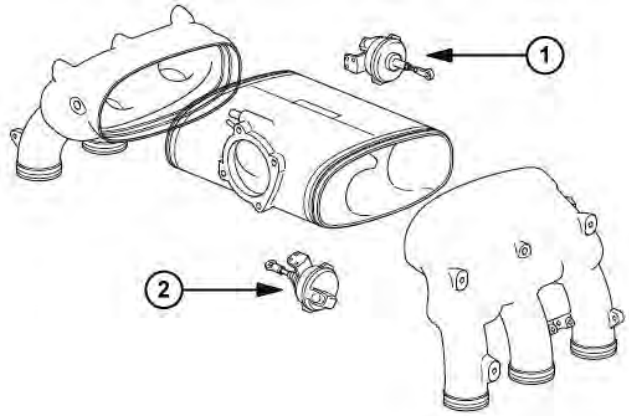

1.5.1

1.5.1 Resonance flaps

- Four-stage resonance intake system
- Resonance flaps controlled by vacuum cells (2x)

The resonance flaps open and close depending on the speed of the engine and thereby have a positive influence on the airflow within the intake system, thus contributing to a power/torque increase. For functional testing, the vacuum cells (1) and (2) can be tested using the RaceCon software during vehicle standstill and activated separately by the computer.

The buttons to be used are Check Reso1 & Check Reso2.

Downloaded from www.Manualslib.com manuals search engine

1.5.2 Throttle

The electronic throttle controls the air supply to the engine by means of an integrated electric motor. The use of a mechanical operator such as throttle cable is therefore not required.

1.5.2.1

- Electronic throttle
- Redundant design by using 2 potentiometers

Throttle Setting

There is no mechanical connection between the throttle and accelerator pedal. The electrical signal from the accelerator pedal is converted by an electric servo-motor in the throttle into an opening angle.

A calibration of the throttle is not required. After switching on the ignition, the throttle opens and closes automatically to determine its limits.

NOTE

After switching on the ignition the starter button is deactivated for 3 seconds as the throttle blade is going through its calibration cycle.

Downloaded from www.Manualslib.com manuals search engine

1.6 Work on the engine

1.6.1 Cylinder head installation

Follow the steps below for cylinder head installation:

1. Lightly oil the threads and contact surfaces
2. Pre-tighten to 30 Nm (22 ft-lb) in the specified order
3. Wait for 15 minutes

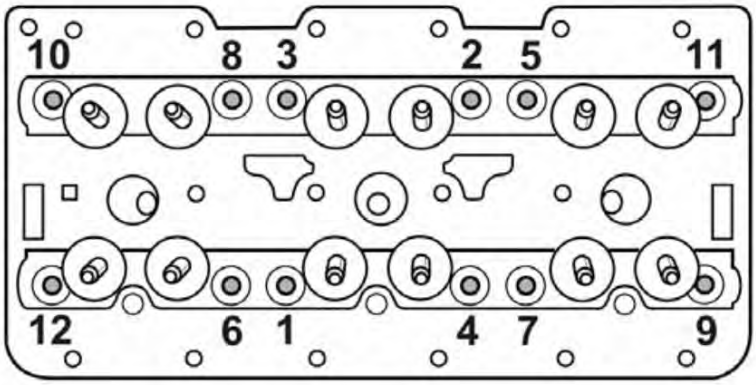

1.6.1.1

4. Completely untighten the bolts in the reverse order
5. Tighten all bolts first to 20 Nm (14.75 ft-lb), then with 120° rotation angle.

Downloaded from www.Manualslib.com manuals search engine

1.6.2 Flywheel tightening instructions

The following procedure is to be observed when mounting the flywheel.

Used flywheel:

NOTE

1. Use new bolts, spare part no. 930.102.206.00
2. Tighten the bolts crosswise to 30 Nm (22 ft-lb)
3. Retighten the bolts to 30 Nm (22 ft-lb) and tighten them crosswise with a 45° rotation angle

New flywheel:

NOTE

Due to the settling behavior, a new flywheel should first be mounted using used bolts as described above under point 2 and 3.

1. Untighten the bolts
2. Replace by new bolts, spare part no. 930.102.206.00
3. Tighten the bolts crosswise to 30 Nm (22 ft-lb)
4. Retighten the bolts to 30 Nm (22 ft-lb) and tighten them crosswise with a 45° rotation angle

1.6.3 Setting the valve timing

Porsche Motorsport recommends using the special tools indicated on the right for setting the valve timing on the 911 GT3 Cup (991).

Valve timing

- Intake valve lobe center line 110° after TDC
- Exhaust valve lobe center line 110° before TDC

Cylinder base plate 1: 996.721.549.90
Cylinder base plate 2: 996.721.550.90
Guide element intake/
exhaust valve lobe center line 110/110:
996.721.551.9A
Crankshaft graduated disk:
996.450.131.00
Chain tensioner: 000.721.940.10
Setting gauge, TDC detection:
996.721.511.9A
Sprocket wheel holding key:
996.721.513.90

Downloaded from www.Manualslib.com manuals search engine

1.6.4 Removing and installing the crankshaft seal – pulley side

Special tools

Porsche Motorsport recommends using the following special tools for installing or removing the crankshaft seal on the pulley side:

- Pulley holding key: Porsche ET-No.: 000.721.973.20
- Pulley holding key insert: Porsche ET-No.: 000.721.973.21
- Crankshaft seal fitting tool: Porsche ET-No.: 000.721.216.40
- Fitting tool spacer ring: Porsche ET-No.: 000.721.979.71
- Crankshaft protective cap: Porsche ET-No.: 000.721.979.70

Removal

1. Remove the pulley of the crankshaft, using special tool Porsche ET-No.: 000.721.973.20 with holding key lengthening Porsche ET-No.: 000.721.873.20

2. Check dowel pin on pulley for damage, replace if required

3. Punch-mark steel ring in two different locations offset by 180°

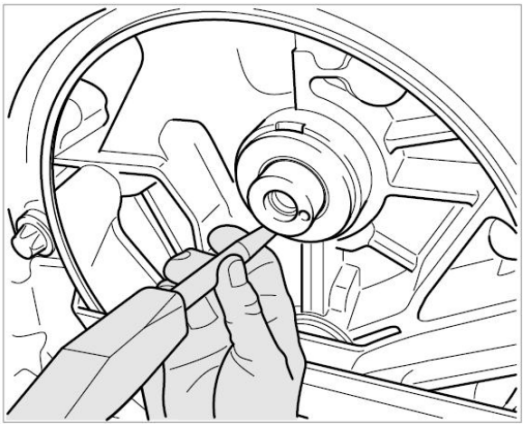

1.6.4.1

Downloaded from www.Manualslib.com manuals search engine

4. Drill holes at the punch-marked locations using a drill (Ø 2 mm)

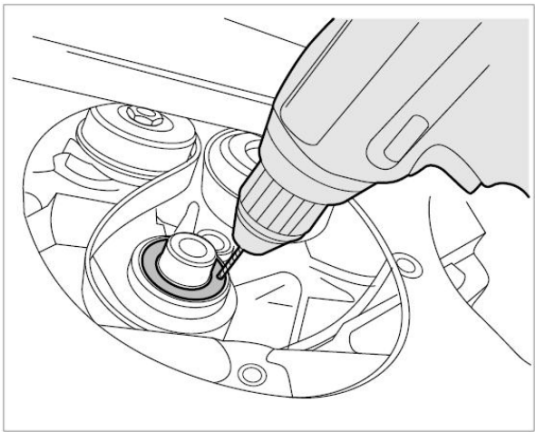

1.6.4.2

5. Screw in the screw head of a commercially available slide hammer puller (1) alternately into the holes and carefully in an alternating way remove the sealing ring (2).

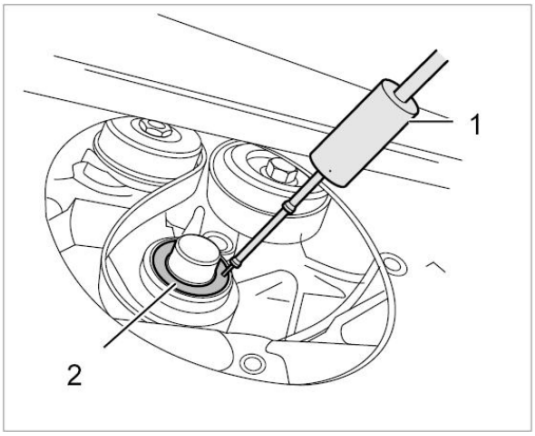

1.6.4.3

Downloaded from www.Manualslib.com manuals search engine

6. Create a drilling template according to the sketch below (cardboard or thick paper), all dimensions indicated in millimeters (50=1.97”, 30=1.18”, 23=0.91”, 2=0.08”)

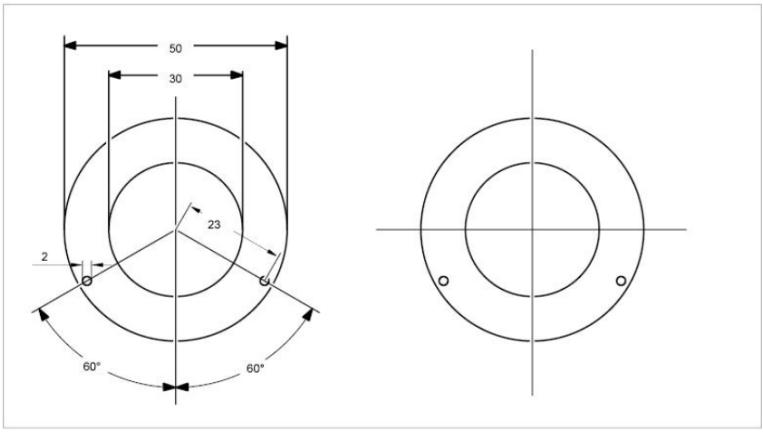

1.6.4.4

7. Push and position the template on the crankshaft flange up to the sealing ring

8. Wet the drill (Ø 2mm) sufficiently with heavy-duty grease

9. Drill holes at the specified locations

10. Screw in the screw head of the slide hammer puller alternately in both holes and pull out the sealing ring

11. Remove shavings

12. Thoroughly clean the flange with cleaning solvent or acetone

Downloaded from www.Manualslib.com manuals search engine

Installation

1. Put together fitting tool (1) Porsche ET-No.: 000.721.216.40 with spacer ring (2) 000.721.979.71

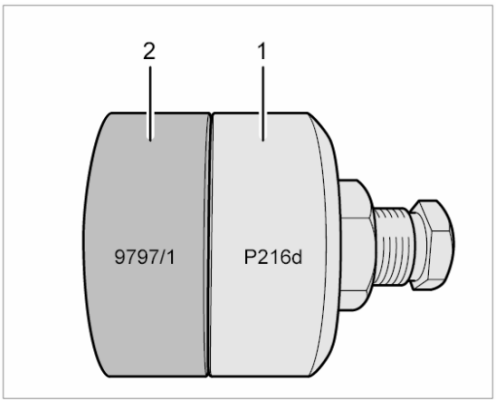

1.6.4.5

2. Always dry mount the crankshaft seal, do not use grease

3. Push protective cap (1) Porsche ET-No.: 000.721.979.70 onto crankshaft flange

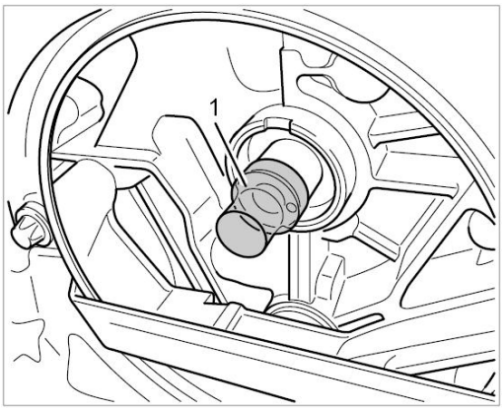

1.6.4.6

Downloaded from www.Manualslib.com manuals search engine

4. Slide the new crankshaft seal (1) on the crankshaft flange (mounting position: steel disk towards belt side)

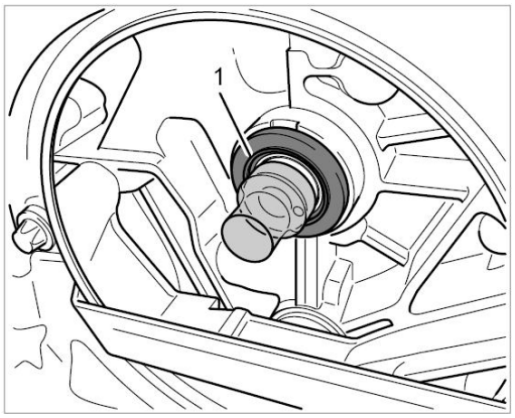

1.6.4.7

5. Slide the fitting tool (see 1.) on the crankshaft flange and screw in hexagon bolt (3) (wrench width SW17)

6. Tighten hexagon nut (4) until spacer ring (2) fits snugly on the crankshaft flange

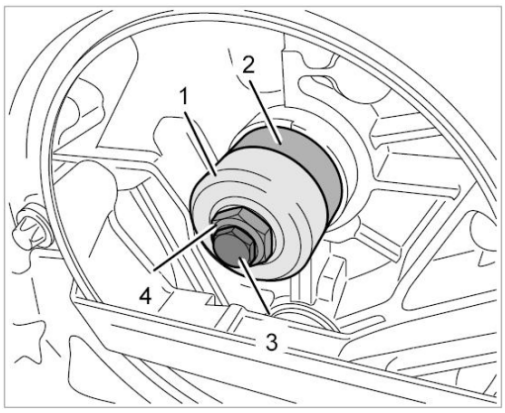

1.6.4.8

7. Leave the tool mounted for approx. two minutes so that the sealing ring can assume its correct position

8. Untighten hexagon bolt (4), unscrew hexagon bolt (3) and remove the tool

9. Remove the protective cap from the crankshaft flange

Downloaded from www.Manualslib.com manuals search engine

1.6.5 Removing and installing the crankshaft seal – flywheel side

Special tools

Porsche Motorsport recommends using the following special tools for installing or removing the crankshaft seal on the flywheel side:

- Pressure piece: Porsche ET-No.: 000.721.912.60
- Seal fitting tool: Porsche ET-No.: 000.721.971.90

The tools may be ordered at your Porsche Center.

Removal

1. Centrally drill two holes on the crankshaft seal metal ring (Ø 2.5 mm).

NOTE Never pry out the seal!

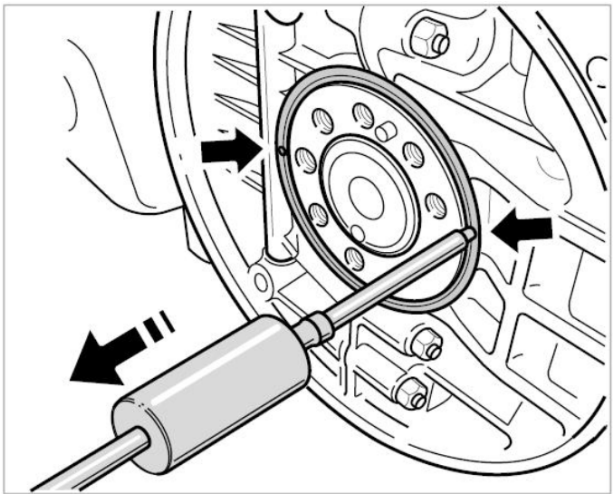

1.6.5.1

Downloaded from www.Manualslib.com manuals search engine

2. Alternately screw in the screw head of a commercially available slide hammer puller in the holes and uniformly pull out the metal ring.

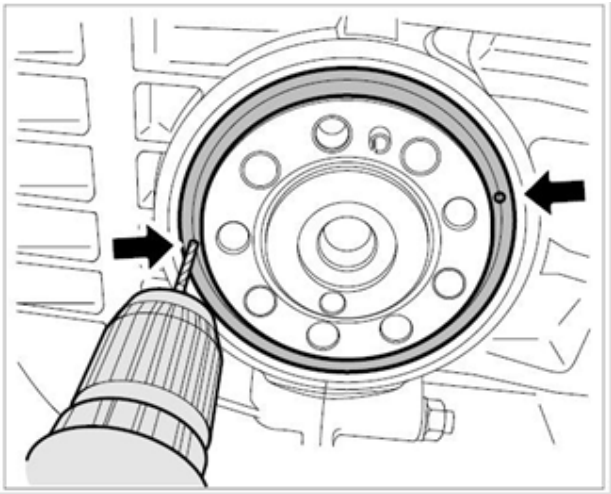

1.6.5.2

3. After removing the metal ring, the real seal remains in the crankcase.

NOTE Never pry it out!

4. Thoroughly remove the drilling shavings

5. Drill two more holes (arrows) using a 0.2 mm drill. Place these holes carefully as possible in the corners (metal body) of the seal

6. A support ring that is provided to prevent a possible inclined position of the seal is fitted behind the crankshaft seal. Therefore, drilling shvaings may occur, which have to be thoroughly removed.

Downloaded from www.Manualslib.com manuals search engine

7. Remove the seal. Use one of the two procedures

   a.) Alternately screw in the screw head of the slide hammer puller in the holes and uniformly pull out the seal.

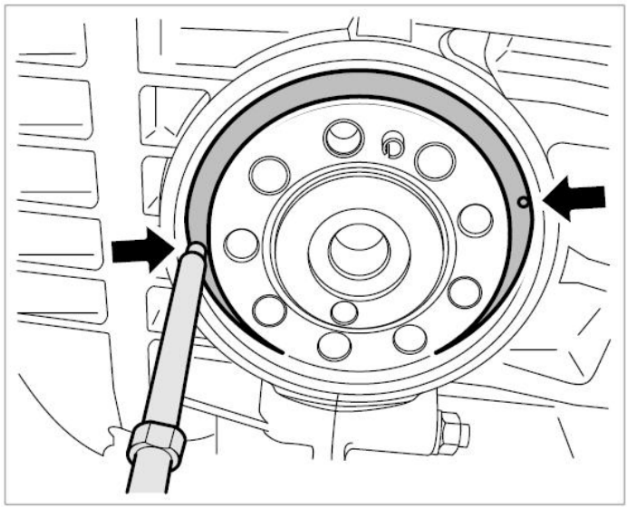

1.6.5.3

   b.) Screw in two tapping screws and pull out the seal using the claw-type sleeve of a slide hammer puller.

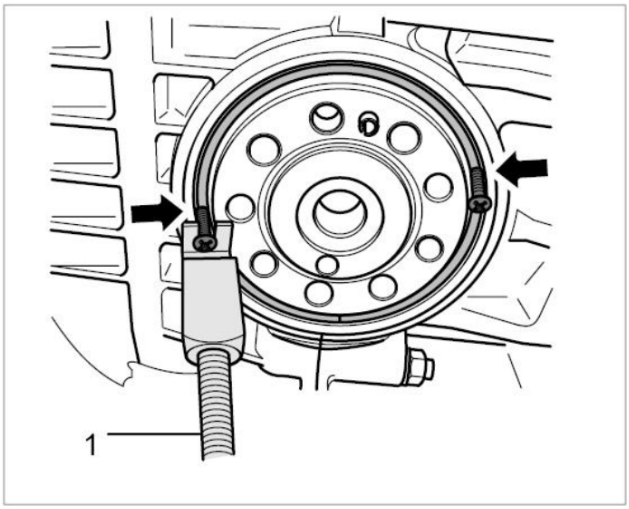

1.6.5.4

8. Thoroughly remove shavings and oil residues from the crankshaft hole.

Downloaded from www.Manualslib.com manuals search engine

Installation

Carefully remove any small edges or burrs on the beveled edge of the crankshaft flange using an oil stone, then thoroughly clean the crankpin and the crankshaft bore (use cleaning solvent or acetone with a clean, lint-free cloth).

Under no circumstances should the crankshaft flange sealing surface be treated with emery cloth or brushes with metal bristles. Remove corrosion on the crankshaft flange only using a special metal-polishing pad. Then clean the crankshaft flange thoroughly with acetone or cleaning solvent.

1. Uniformly attach (hand-tight) the fitting tool base plate Porsche ET-No.: 000.721.971.90 to the crankshaft flange using the socket head screws

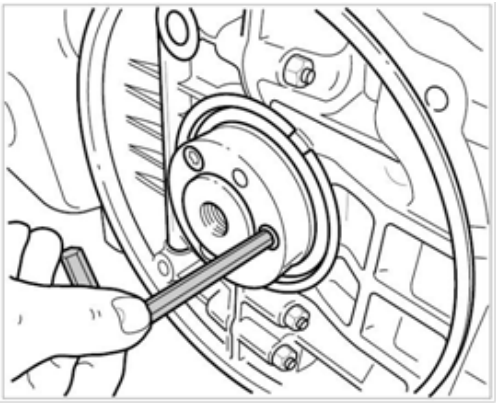

1.6.5.5

NOTE

Only dry mount the crankshaft seal. Never touch the micro lip seal.

During mounting, the steel ring should point towards the viewer

Downloaded from www.Manualslib.com manuals search engine

2. Place the magnetic cone of the fitting tool on the base plate, attach the crankshaft seal on the cone and slide it carefully onto the base plate

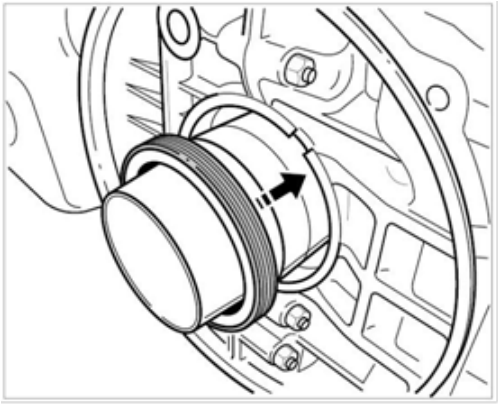

1.6.5.6

3. Remove the magnetic cone and slide the crankshaft seal in a plane-parallel position using the pressure piece Porsche ET-No.: 000.721.912.60

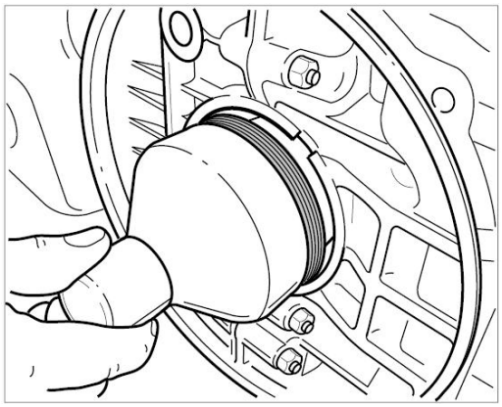

1.6.5.7

Downloaded from www.Manualslib.com manuals search engine

4. Attach the fitting tool mounting bell Porsche ET-No.: 000.721.971.90 to the base plate by tightening the mounting bell hexagon bolt (hand-tight)

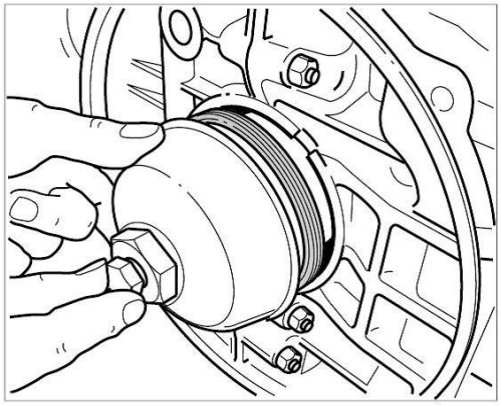

1.6.5.8

5. Pull the crankshaft seal on the crankshaft flange by turning clockwise the fitting nut until the mounting bell fits snugly and completely on the crankcase contact surface

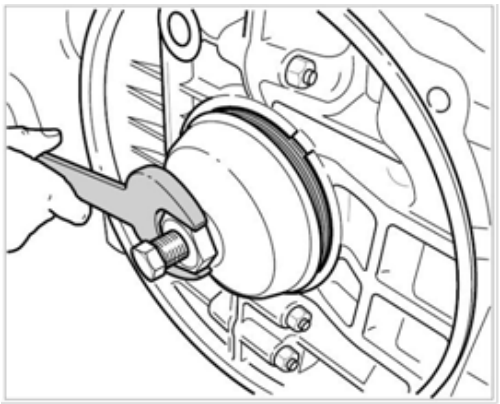

1.6.5.9

6. Leave the fitting tool in the final position for one to two minutes to allow the seal and lip seal to sit correctly in position

7. Untighten the fitting nut and unscrew the fitting tool hexagon bolt and the base plate

Downloaded from www.Manualslib.com manuals search engine

8. Check the seal mounting position. For this purpose, measure at four points from the crankshaft flange to the steel ring flat surface (arrows) using a vernier caliper

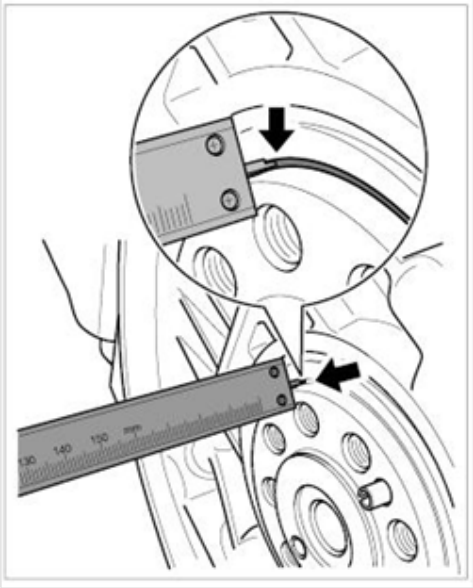

1.6.5.10

NOTE

Measuring depth approx. 5 mm (0.2”)

Maximum allowable tilt is 0.5 mm (0.2”)

9. If the comparative values exceed the maximum difference, press in the seal again using the fitting tool

Downloaded from www.Manualslib.com manuals search engine

1.7 Engine tightening torque overview

Component	Screw dimensions	Tighening torque [Nm]
Engine		
Engine mount to body	M10	65 (48 ft-lb)
Crankshaft and crankcase		
Connecting rod	M10 x 1.25	*1
Oil pump	M8	23 (17 ft-lb)
Crankcase bolt/nut	M8	23 (23 ft-lb)
Pulley to crankshaft	M14 x 1.5	170 (125.4 ft-lb)
Sealing screw, pressure control and safety valve	M18 x 1.5	40 (29.5 ft-lb)
Crankcase oil drain plug	M20 x 1.5	50 (37 ft-lb)
Water drain plug cyl. 1-3	M10 x 1	10 (7.4 ft-lb)
Water drain plug cyl. 4-6	M10 x 1	10 (7.4 ft-lb)
Flywheel	M10	refer to 1.6.2
Cylinder head		
Cylinder head bolt	M10	refer to 1.6.1
Camshaft housing		
Camshaft housing to cylinder head	M8	Pre-tightening: 23 (17 ft-lb) Final tightening: 28 (20.7 ft-lb)
Knock sensor	M8	23 (17 ft-lb)
Spark plugs	M12 x 1.25	22 (16.23 ft-lb)
Install the same spark plugs not more than five times		
Camshaft sprocket on camshaft	M12 x 1.5	30 (22 ft-lb) + 90°
Chain case on crankshaft	M8	23 (17 ft-lb)
Valve cover on camshaft housing	M6	9.7 (7.2 ft-lb)
Camshaft bearing cover	M6	13 (9.6 ft-lb)

Downloaded from www.Manualslib.com manuals search engine

Auxiliary Units		
Pulley on generator		55 (40.6 ft-lb)
Lambda sensor	M18 x 1.5	50 (37 ft-lb)
Flywheel coupling	M8 x 45	33 (24.3 ft-lb)
Oil drain plug on oil tank	M20 x 1.5	60 (44.3 ft-lb)

*1= Pre-tightening 30 +/- 3 Nm (22.1 ± 2.2 ft-lb)

Final tightening 62 (45.7 ft-lb) +/-2° rotation angle

Expansion resulting from tightening 0.200 +/-0.015 mm (0.008 ± 0.0006”)

Downloaded from www.Manualslib.com manuals search engine

1.8 Exhaust system

In the course of the different engine modifications, the exhaust system has also been refined. A version with muffler and a version without muffler are available. Both versions are equipped with exhaust manifold including catalysts (100 cells).

System with muffler:

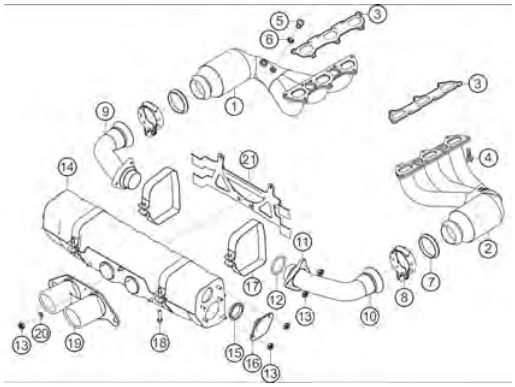

1.8.1

System without muffler:

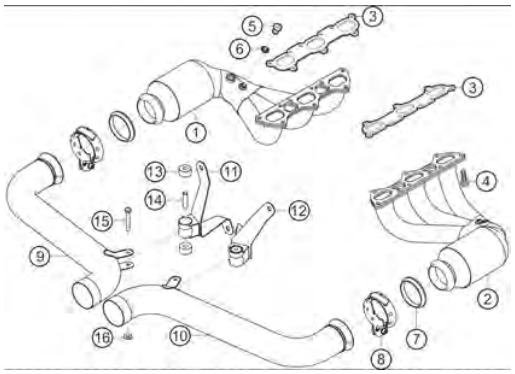

1.8.2

System with pre muffler:

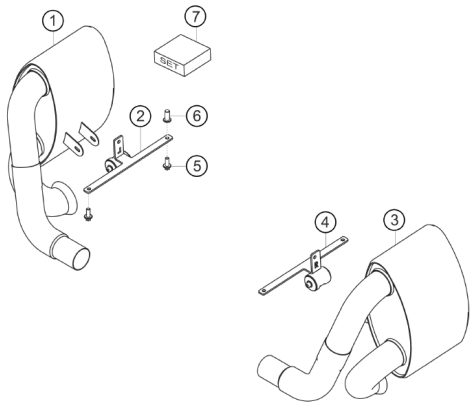

1.8.3

Downloaded from www.Manualslib.com manuals search engine

NOTE

The damping performance of the pre-muffler decreases with increasing runtime. Possibly the pre-muffler have to be insulated additionally (refilled) with available insulation material. Porsche ET-No.: 991.111.811.9A. The picture beside shows the service opening for refilling.

Make use of an air gun to proper refill the insulation material (figure 1.8.5)

Torque service bolt: 60 Nm

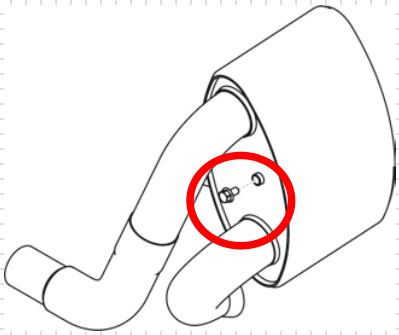

1.8.4

1.8.5

1.9 Fixation pre-silencer

Porsche Motorsport points out that the fixation of the pre silencers makes the following changes necessary.

Part list:

Pos	Part number	Name	Item per car
1	991.111.147.9A	Pre silencer left	1
2	991.111.148.9A	Pre silencer right	1
3	991.111.247.9A	Bracket pre silencer left	1
4	991.111.248.9A	Bracket pre silencer right	1
5	900.385.009.01	6-RD bolt M6	4
6	999.500.130.02	Rivet nut M6	4

1.9.1

Removing studs

Remove the studs shown in the picture on both sides. (figure 1.9.1).

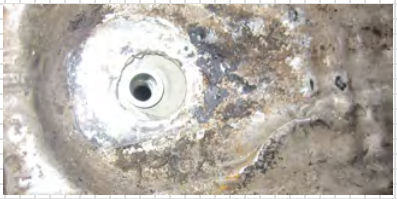

1.9.2

Mounting of riveting nut (M5)

Drill bores (7 mm) at the position of the studs and bring in riveting nuts M5 (figure 1.9.2).

Downloaded from www.Manualslib.com manuals search engine

Fixation of bracket

Cut out approximately 50 mm of the heat shield in the middle between the stud positions and open the screw to fix the middle piece of the bracket (figure 1.9.3).

Mounting of the pre silencer

Mount the bracket of the pre silencer to the chassis and then mount the pre silencer to the bracket (figure 1.9.4).

1.9.3

1.9.4

1.10 Engine run time

The 911 GT3 Cup (991) engine based on the 997 drive unit is designed for a maximum speed of 8,500 rpm so that an inspection interval of **50 hours** is recommended.

NOTE

If an engine speed above 8,500 rpm is recorded, Porsche Motorsport will not accept any good-will claims.

1.10.1 Behavior when exceeding the maximum speed

When the maximum speed of 8,500 rpm is exceeded, the insepction interval changes according to the table below.

Speed	Duration	Inspection
< 9,000 rpm	-	After 50 hours
9,000 – 9,500 rpm	Over 6 seconds	Immediate check on the test bench
> 9,500 rpm	Over 2 seconds	Immediate engine inspection
> 10,000 rpm	When exceeded for the first time	Immediate engine inspection

Downloaded from www.Manualslib.com manuals search engine

2 Powertrain

2.1 General

The 911 GT3 Cup (991) integrates a sequential six-speed gearbox specially developed for use in motor sports. The shift mechanism has been designed for optimal efficiency, taking into account the pneumatic actuation by means of the compressed air system. In addition, the gearbox is equipped with a limited-slip differential, an oil filter and an oil/water heat exchanger for cooling. Despite the compact design of the gearbox, accessibility to the individual components has been enhanced. This is a significant improvement, especially, for facilitating any required maintenance work.

2.1.1

Downloaded from www.Manualslib.com manuals search engine

2.2 Clutch

A Sachs three-disk sintered metal clutch is used in the 911 GT3 Cup (991). The clutch has been designed particularly for the loads in motor sports and combines high performance and temperature durability with reduced weight and low moment of inertia.

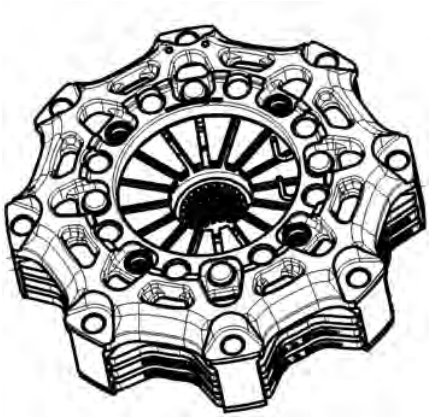

2.2.1

NOTE

Do not drive the vehicle with slipping clutch. This will cause excessive wear or overheating (maneuvering, loading and unloading, etc.).

2.2.1 Installation instructions

Make sure that the wings of the multiple-disk clutch sintered disks (1) are stacked and aligned (A) if possible. Lightly grease the gear teeth of the hub (B) and move the clutch disks back and forth on the connecting shaft gear teeth until the hub moves smoothly on the shaft. If required, remove excess grease.

NOTE

No grease should get on the clutch linings.

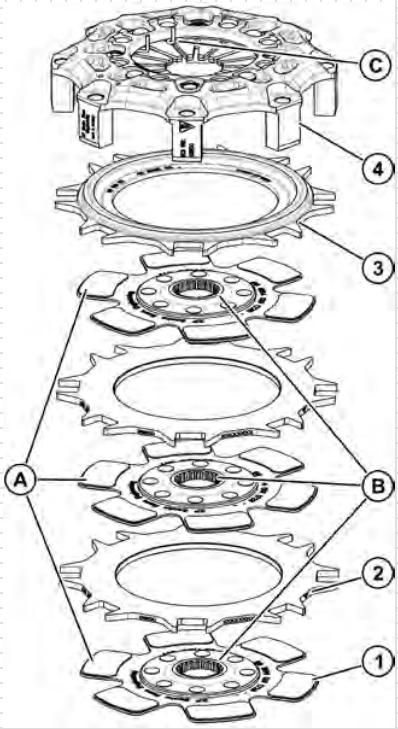

2.2.1.1

1 Clutch disk
2 Intermediate plates
3 Pressure plate
4 Housing
A Wings of sintered disks
B Hub gear teeth
C Clutch housing

Downloaded from www.Manualslib.com manuals search engine

2.2.2 Clutch wear

New sintered lining	3.40 mm (0.13“)
Replace at	3.00 mm (0.12“)

The contact pressure of the cup spring remains constant up to this dimension (3 mm). Use "Racing Fluid-325 °C" from Performance Friction Brakes as clutch fluid. If it falls below the limit above, the clutch disk should be replaced.

2.2.3 Fluid for clutch actuation

Racing Brake Fluid-325° from Performance Friction Brakes is used as clutch fluid.

Porsche spare part No.: 991.355.960.8A

Porsche recommends to vent the system after each session and to change the fluid after each race weekend.

Venting:

- Depress the clutch pedal 2 to 3 times and keep it depressed
- Shortly open the vent valve (illustration 2.2.3.1) – the clutch pedal has to be depressed and should not be released
- Close the vent valve again
- Repeat this procedure 2 to 3 times
- Check the fluid level on the fluid reservoir and replenish fluid, if required

2.2.3.1

Replacement:

- Remove the old fluid from the reservoir and fill with new fluid
- Then proceed as for venting, perform approx. 10 times the steps mentioned above and replenish fluid in the reservoir if required.

Downloaded from www.Manualslib.com manuals search engine

2.2.4 Central release mechanism

The hydraulically actuated piston is controlled by the clutch pedal and the master cylinder and thereby acts as a slave cylinder. The thrust bearing integrated into the release piston transfers the force to the diaphragm spring of the clutch housing, thereby separating the positive engagement between engine and gearbox.

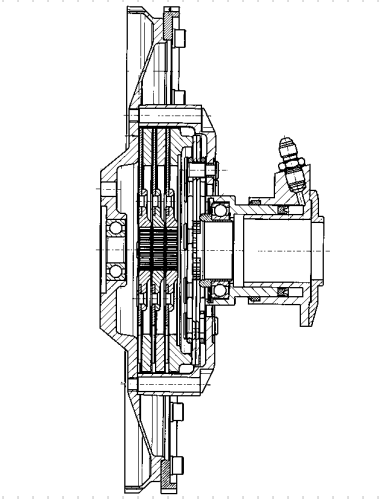

2.2.4.1

NOTE

When handling the central release mechanism seal, make sure to avoid any contact with transmission oil. Otherwise, the seal may swell, which in the worst case may lead to a loss of function. Only use the Sachs special tool to fit the seal.

Also make sure to remove oil residues from your hands and the working environment before handling the seal (this also applies to engine oil and other oils).

According to the manufacturer, the seal is compatible only with hydraulic fluids with DOT4 and DOT5.1 specifications.

External mounting tool
997.450.371.9A

Internal mounting tool
997.450.372.9A

Release mechanism seal mounting tool
997.450.373.9A

Downloaded from www.Manualslib.com manuals search engine

2.3 Sequential six-speed gearbox

2.3.1 Overview

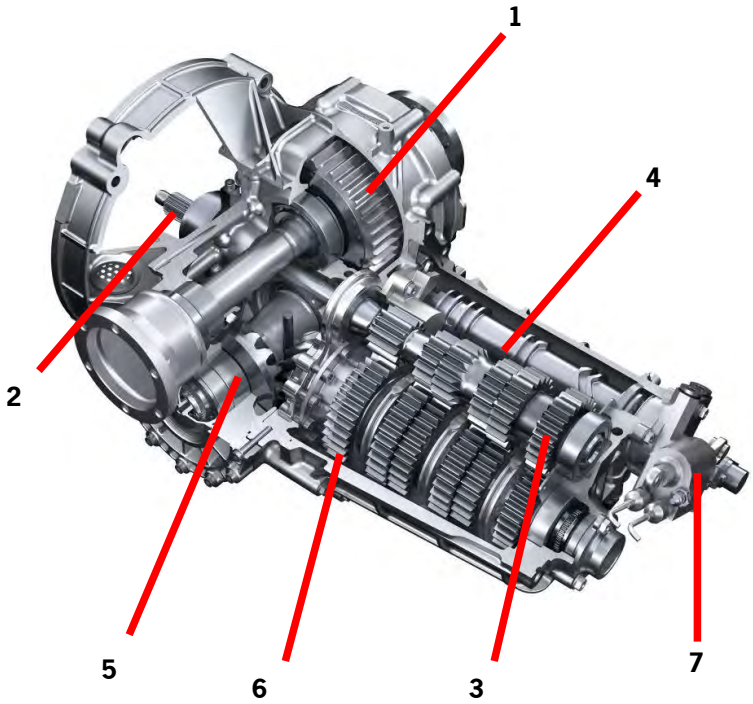

2.3.1.1

1 Limited-slip differential
2 Connecting shaft
3 Drive shaft
4 Gear shift drum
5 Cross shaft
6 Pinion shaft
7 Gear shift cylinder

Downloaded from www.Manualslib.com manuals search engine

2.3.2 Technical specifications

Gearbox type	G91/72
Design	sequential
Number of forward gears	6
Fill quantity	3.0 l (3.17 qt.)
Weight	70 kg (154 lb.)

Gear	Teeth	i_gear	i_const.	i_bevel/crown gear	i_total
1	13 / 41	3.154	2.412	1.571	11.951
2	17 / 40	2.353	2.412	1.571	8.916
3	19 / 36	1.895	2.412	1.571	7.181
4	19 / 29	1.526	2.412	1.571	5.782
5	24 / 30	1.250	2.412	1.571	4.737
6	34 / 35	1.029	2.412	1.571	3.899
Reverse	16 / 37	2.313	2.412	1.571	8.765
Constant	17 / 41		2.412		3.789
bevel/ crown gear	14 / 22			1.571	3.789

Downloaded from www.Manualslib.com manuals search engine

2.3.3 Gear set

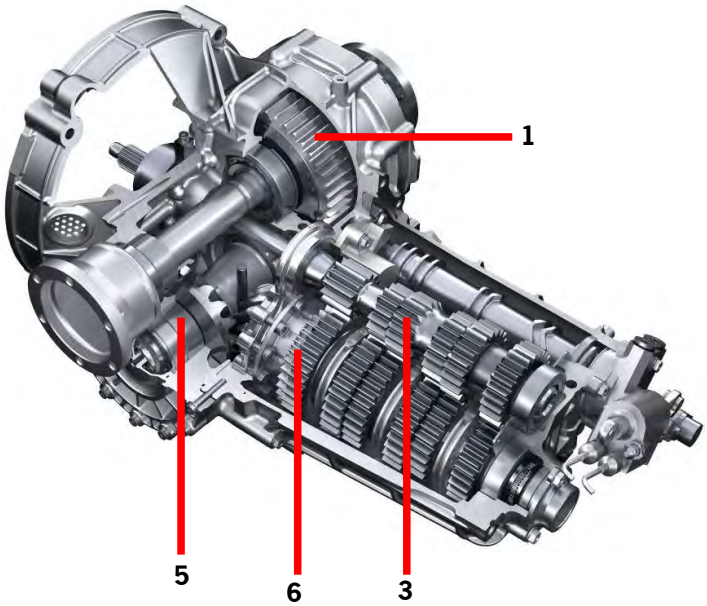

2.3.3.1

The gear set consists of the drive shaft (3) with fixed gears, the pinion shaft (6) with idlers, a cross shaft with constant ratio (5) and the limited-slip differential (1).

Connecting shaft

The connecting shaft (1) is the element that connects the clutch to the drive shaft. It transfers the torque generated by the engine directly to the fixed gears of the drive shaft.

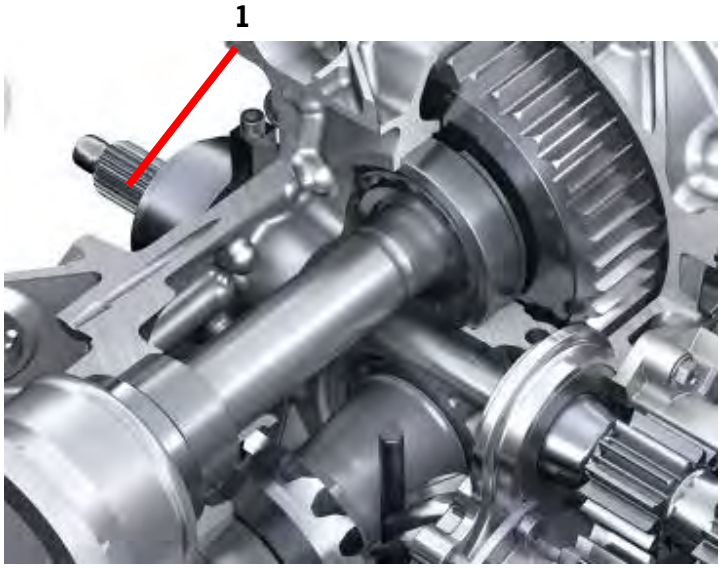

2.3.3.2

Downloaded from www.Manualslib.com manuals search engine

Drive shaft design

The drive shaft is located above the pinion shaft and is mounted with two bearings in the gearbox housing. As typically found in motor sports, the fixed gears of the gear pairs are all located on this shaft.

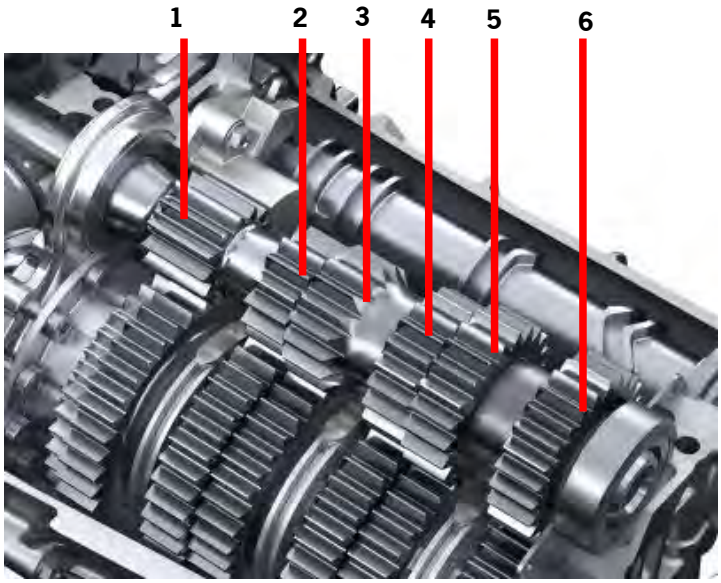

2.3.3.3

1 Fixed gear, 1st gear
2 Fixed gear, 2nd gear
3 Fixed gear, 3rd gear
4 Fixed gear, 4th gear
5 Fixed gear, 5th gear
6 Fixed gear, 6th gear

Pinion shaft design

The pinion shaft is located below the drive shaft and is mounted with three bearings in the gearbox housing. A special feature is the combination of cylindrical rollers and angular contact ball bearings directly in front of the bevel gear. This bearing arrangement directs the occuring forces into the housing in the best possible way. The pinion shaft accommodates all idlers of the gear pairs as well as the sliding sleeves, which are responsible for positive engagement.

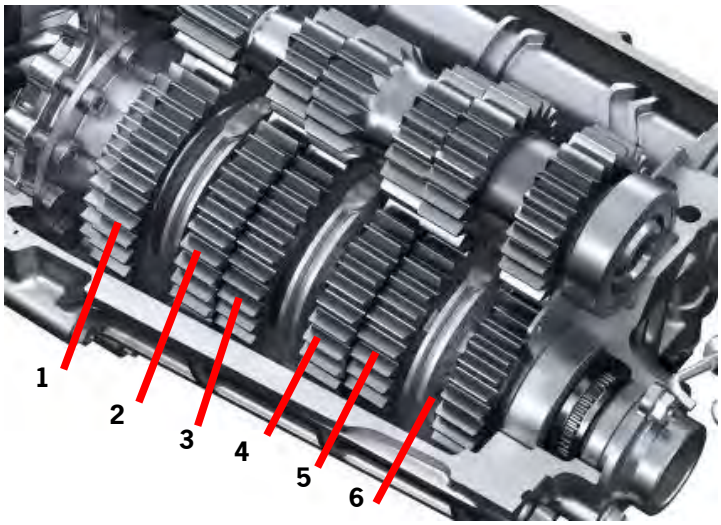

2.3.3.4

1 Idler, 1st gear
2 Idler, 2nd gear
3 Idler, 3rd gear
4 Idler, 4th gear
5 Idler, 5th gear
6 Idler, 6th gear

Downloaded from www.Manualslib.com manuals search engine

Cross shaft design

The cross shaft (1), offset by 90°, is located behind the pinion shaft and is used for changing the direction of the torque. The crown gear of the cross shaft is driven by the bevel gear of the pinion shaft. The torque is transmitted by means of the opposing spur gear teeth to the limited-slip differential located above it.

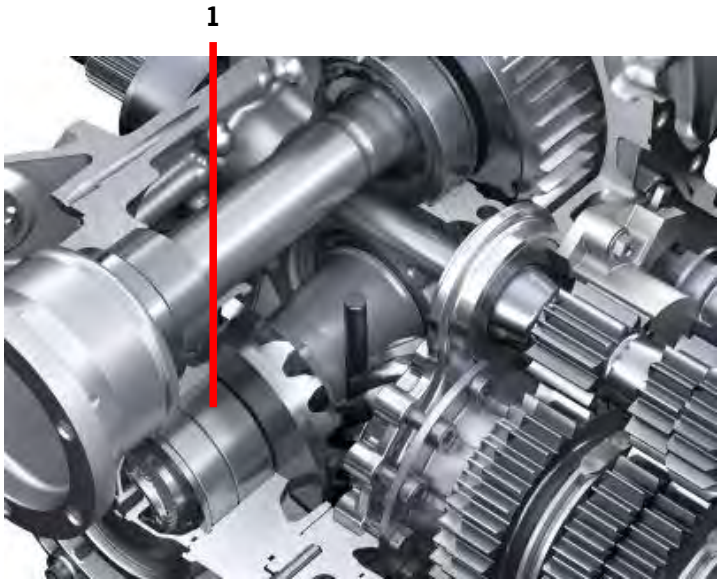

2.3.3.5

Downloaded from www.Manualslib.com manuals search engine

Direction of rotation, traction
Shaft movement, traction
Shaft movement, coast
Driving direction

2.3.4 Drive

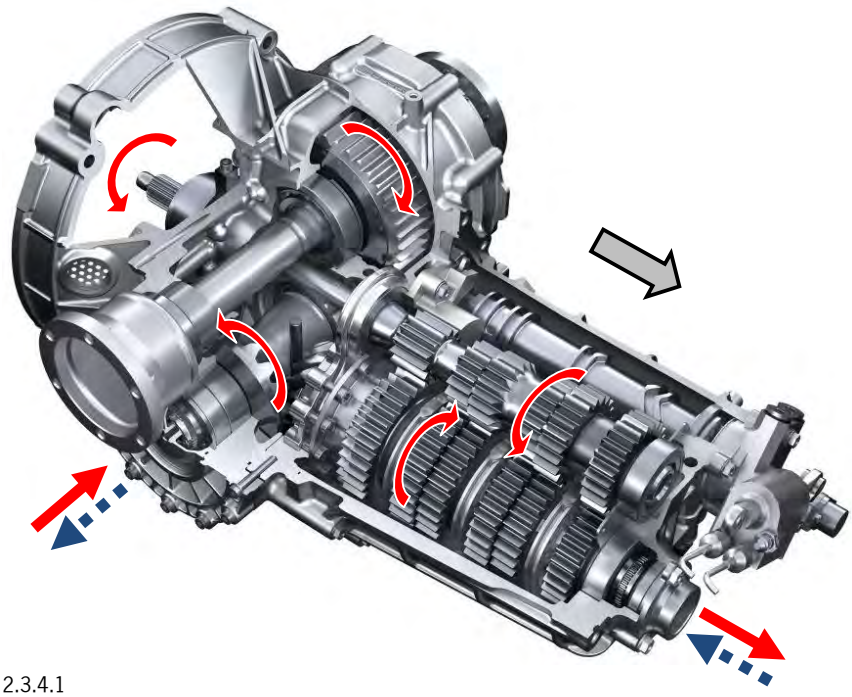

2.3.4.1

The torque is transmitted from the engine through the connecting shaft and drive shaft to the gearbox and then through the corresponding gear ratio from the drive shaft to the pinion shaft. The direction of the torque/speed is changed from the longitudinal to transverse direction by means of the cross shaft with constant ratio. The final drive ratio transmits the torque through the limited-slip differential to the axle flanges and finally through the axle shafts to the driving wheels.

Downloaded from www.Manualslib.com manuals search engine

Limited-slip differential

The limited-slip differential is provided with 12 friction disks. The ramp angle of the pressure pieces is 52° on the traction side and 30° on the coast side. When fitting, pay attention to the correct orientation of the pressure pieces (illustration No. 2.3.4.2).

Operation

The pressure pieces (1) driven by the differential cage transmit the torque to the two cross pin bolts (2). The differential gears pivoted on these bolts drive the output shaft flanges by means of the lateral bevel gears. Depending on the torque gradient (traction/thrust), the cross pin bolts move the pressure pieces out and press the clutch disks (4), the pressure plates (3) and the cup springs (5) together.

Component overview

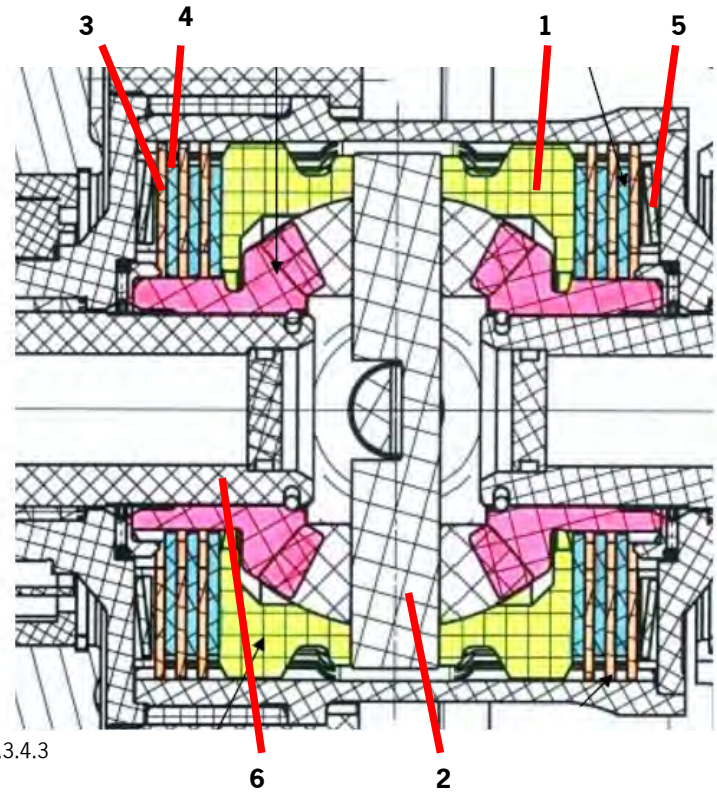

2.3.4.3

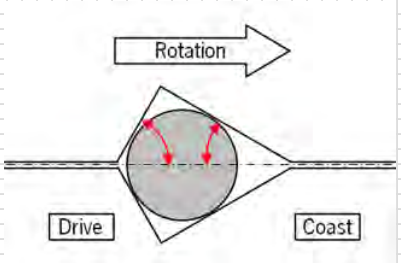

2.3.4.2

1 Pressure piece
2 Cross pin bolt
3 Pressure plate
4 Clutch disk
5 Cup spring
6 Drive shaft flange

Basic blocking torque

The basic blocking torque of the limited slip differential is approx. 100 Nm (74 ft-lb) when new.

Downloaded from www.Manualslib.com manuals search engine

2.3.5 Oil circuit

Oil grades and fill quantity

The gearbox fill quantity is 3.0 liters (3,17 qts) of Mobilube 1SHC75W90. When filling, make sure that the gearbox is placed on a flat surface. Viewed in the driving direction, the inclined oil filler neck (1) is located on the right side of the gearbox.

Oil cooling

The gearbox is provided with a separate oil/water heat exchanger (2) for heating and cooling the gear set oil.

The heat exchanger is fitted externally on the upper side of the gearbox. The internal oil pump is driven by the idler of the 1st gear on the pinion shaft, the cooling oil supply depends on the engine speed. An oil filter located in the gear housing purifies the oil before it is directed into the supply channels. This filter can be replaced separately and is easily accessible through the left side of the gearbox.

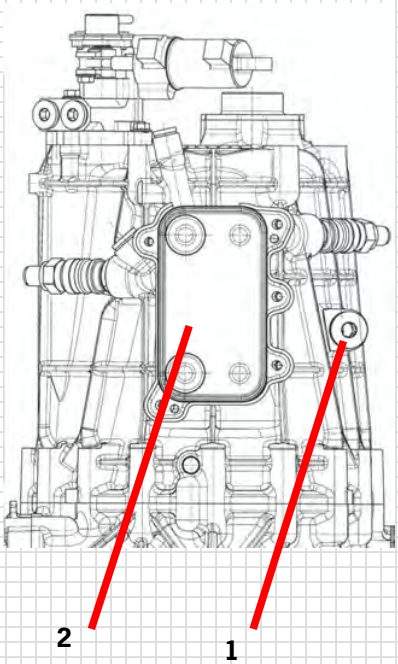

2.3.5.1

Downloaded from www.Manualslib.com manuals search engine

2.4 Gear shift mechanism

The G91/72 is a sequential gearbox with six forward gears and one reverse gear. Gear shifting is performed using two shift paddles located on the steering wheel and a pushbutton on the instrument panel connected to the steering wheel. Pull the right paddle to up-shift and the left paddle to down-shift. The reverse gear is engaged by pressing the “Reverse” pushbutton on the steering wheel.

2.4.1

NOTE

The „Emergency Gearbox“ switch is located on the center console. This switch is used to continue operation in case of sensor failure. Refer to chapter 2.4.3.

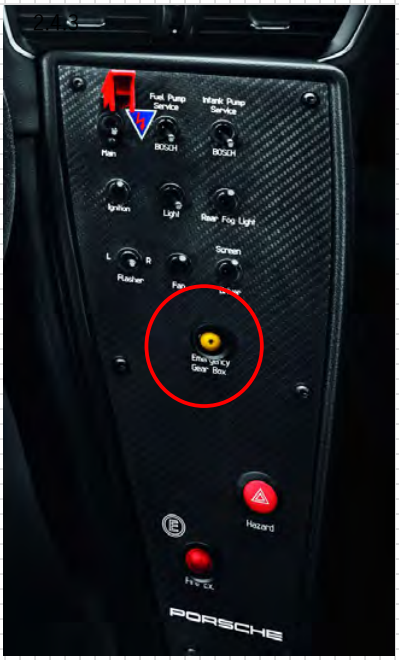

2.4.2

Paddle Shift

The paddle shift system is used by the driver to change gears and to protect the drive train against incorrect handling. Shift paddles on the steering wheel, pass electrical signals to the Bosch engine control unit when they are actuated. The shift request is evaluated in the Bosch ECU and transferred to the APS control unit. The compressor integrated in the APS unit generates compressed air and stores it in the unit's pressure reservoir. When the shift request from the paddle is transferred to the valve block by the controller, the gear shift cylinder engages the required gears. The system pressure is between 6 and 6.7 bar (87.0 – 97.2 psi). If system pressure falls below 6 bar (87.0 psi), the compressor is switched on automatically.

Downloaded from www.Manualslib.com manuals search engine

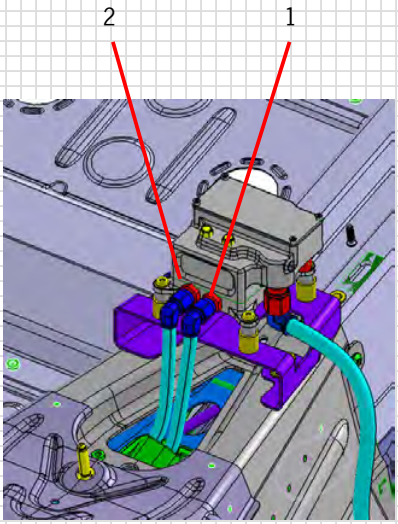

2.4.5

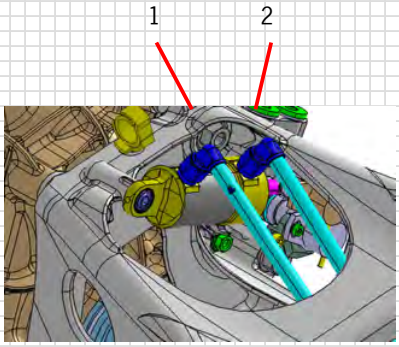

2.4.4

Advantages of the system

- Gear shifting with both hands on the steering wheel
- Automatic double de-clutching when down-shifting
- Focusing on braking and steering
- Over-revving of the engine is less probably*
- Gearbox protection due to consistent gear shifting

*Blocking of the rear wheels during the braking process, may still allow over-revving. Therefore avoid blocked wheels.

Connenction of the components

Valve block (2.4.3):

1 = Upshift

2 = Downshift

Shift cylinder (2.4.4):

1 = Upshift

2 = Downshift

2.4.1 Gear shifting

Gear shifting is initiated by the paddles on the steering wheel. Different parameters (e.g. velocity, rpm) are checked by means of the CAN bus to determine whether gear shifting is possible. If this is the case, the pneumatic gear shift cylinder on the gearbox is actuated. The gear shift drum turns, actuates the shift forks and engages the desired gear.

Downloaded from www.Manualslib.com manuals search engine

Gear shift conditions

Observe the following handling conditions to ensure the correct operation of the gear-shift system.

Example of how to read the diagram: Engaging the reverse gear

- No actuation of the shift paddle
- The throttle must be < 17% (neutral position)
- Pressing the clutch pedal is required
- REVERSE pushbutton on the steering wheel
- The reverse gear is engaged

Downshifting

A down shift is possible only in thrust condition. In addition, the following conditions must be met: accelerator pedal = 0 % and the throttle position must be less than 20 %.

	Up-shifting			Down-shifting		
	R -> N	N -> 1	1 -> 6	6 -> 1	1 -> N	N -> R
Paddle/ pushb.	Right	Right	Right	Left	Left	Reverse button
Throttle	Not actuated	Not actuated	>20%	<20%	Not actuated	<17%
Clutch	Actuated	Actuated	-	-	Actuated	Actuated
Double de-clutching	-	-	-	Autom.	-	-
Engine speed	-	-	>3.000 rpm	-	-	<3.000 rpm
v vehicle	-	-	-	-	-	<5 km/h (3 mph)
System pressure	>3,2 bar	>3,2 bar	>3,2 bar	>3,2 bar	>3,2 bar	>3,2 bar

Functional testing at standstill:

When performing a functional test, the following conditions have to be met:

- Engine at standstill (neng = 0)
- Vehicle velocity < 5 km/h (3 mph)

Up-/down-shifting with and without clutch is possible.

Downloaded from www.Manualslib.com manuals search engine

2.4.2 Gear recognition

For electronic recognition of the engaged gear, a potentiometer is installed on the gearbox. The potentiometer outputs a defined voltage depending on the gear currently engaged. Gear recognition is necessary for the interruption of the power flow when up-shifting.

Basic setting

The basic setting of the potentiometer must be performed in 6th gear. The corresponding potentiometer voltage at the "Vitals Page" on the display has to be 4.5 volts. Elongated holes at the potentiometer housing allow a fine adjustment.

Note: The cable of the potentiometer has to point to the bottom position, when mounted correctly.

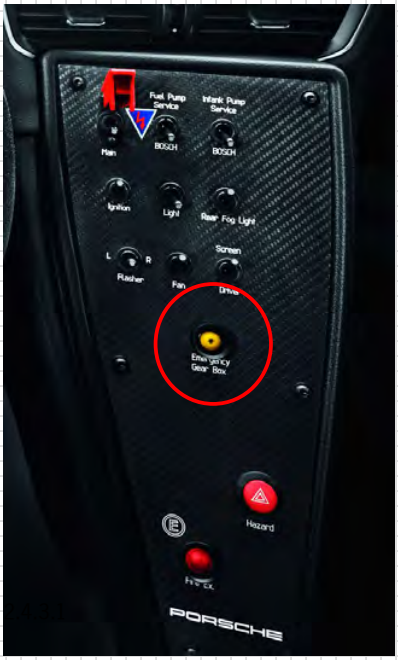

2.4.3 „Emergency gearbox“ switch

In case of failure of certain sensors that normally ensure the correct operation of the gear shift system, an emergency program may be enabled by pressing the „Emergency Gearbox” switch.

The emergency program is automatically enabled in case of the following malfunctions:

1. Clutch pressure sensor defective or incorrect pressure signal
2. Gearbox potentiometer defective or incorrect pressure signal
3. Speed sensors defective or incorrect signals

NOTE

All safety functions are disabled when the „Emergency Gearbox” switch is enabled. This means that all gear-shift requirements are carried out. It is therefore possible to damage the system or assemblies in case of improper operation!

Downloaded from www.Manualslib.com manuals search engine

2.4.4 Maintenance

Small Service:

- Once p.a.
- Max. 10.000 km
- Max. 10 h compressor run time

Big Service:

- Every two years
- Max. 20.000 km
- Max. 20 h compressor run time

Contact data

MEGA-Line Racing ELECTRONIC GmbH
Haunersdorf Str. 3
D-93342 Saal a.d. Donau
Phone.: +49 9441 6866-0
Fax: +49 9441 6866-11
E-Mail: info@mega-line.de

Downloaded from www.Manualslib.com manuals search engine

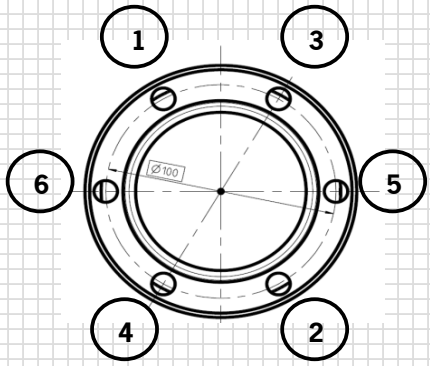

2.5.1

2.5 Drive shafts

It is recommended to run in drive shafts on new vehicles or newly fitted drive shafts for about 50 km (31 miles) with reduced load and at max. 200 km/h (124 mph).

- Only use HT 1 LF grease for lubrication when overhauling the drive shafts
- Do not interchange used drive shafts left-right

Grease quantity for joint on wheel side:	150 g (5.3 ounces)
Grease quantity for joint on gearbox side:	120 g (4.2 ounces)
Porsche spare part No. (100 g (3.5 ounce) tube):	000.043.110.01

2.5.1 Tightening instructions

1. Tighten all bolts to 30 Nm (22.1 ft-lb) in the specified order
2. Tighten all bolts to 60 Nm (44.3 ft-lb) in the specified order
3. Tighten all bolts to 90 Nm (66.4 ft-lb) in the specified order

Lightly oil the bolts. Follow these tightening instructions whenever the drive shaft bolt connections have been untightened.

Downloaded from www.Manualslib.com manuals search engine

2.6 Gearbox run time

The gearbox running time is **30 hours**.

2.7 Gearbox tightening torques

Place	Designation	Number per gearbox	Tightening torque/Comment
Coupling on engine/flywheel	ZYL-SHR M8x45	8	pre-tightening8 Nm final tightening 33 Nm
Gearbox on engine	6KT-MU M10	4	
Gearbox on body/carrier3/top	6KT-SHR AM10X75	2	65 Nm
Gearbox on body/carrier3/bottom	6KT-SHR M10X50	2	65 Nm
Gearbox housing cover cross shaft	6KT-MU M8	11	25 Nm
Gearbox housing cover differential	6KT-MU M8	8	25 Nm
Gearbox housing-gear housing	6KT-MU M8	16	25 Nm
Gearbox housing carrier frame 4-point bearing	6KT-MU M8	11	33 Nm
Gearbox housing carrier frame 4-point bearing	Countersunk bolt M8x30	1	33 Nm
Gearbox housing-oil pump	6KT-MU M6	4	9.7 Nm
Gearbox housing-oil suction pipe	6KT-MU M6	1	9.7 Nm
Gearbox housing-gear shift drum	6KT-MU M6	2	9.7 Nm
Gearbox housing-thrust bearing with stop	6KT-MU M8	1	25 Nm
Gearbox housing-thrust bearing with stop	6KT-MU M6	1	9.7 Nm
Gearbox housing-oil bore cap	VSHL-SHR M10x1	3	15 Nm
Gearbox housing-oil bore cap	VSHL-SHR M12x1.5	3	9 Nm
Gearbox housing-central release mechanism	6KT-MU M6	4	9.7 Nm
Gear housing-heat exchanger	6KT-MU M6	5	9.7 Nm
Gear housing-oil filler opening	VSHL-SHR M22x1.5	1	40 Nm
Gear housing-bearing retaining plate	6KT-MU M5	4	5.6 Nm
Gear housing-baffle plate	6KT-MU M5	3	5.6 Nm
Gear housing-Z shift mechanism	6KT-MU M6	3	9.7 Nm
Gear housing-air conditioning compressor cover	6KT-MU M6	3	9.7 Nm
Gear housing-gearbox carrier	6KT-MU M10	4	45 Nm
Gear housing-water bore cap	VSHL-SHR M16x1.5	1	20 Nm
Gear housing-oil bore cap	VSHL-SHR M12x1.5	1	9 Nm
Gear housing-oil drain opening	VSHL-SHR M22x1.5	1	40 Nm

Downloaded from www.Manualslib.com manuals search engine

Place	Designatio	Number per gearbox	Tightening torque/Comment
Pinion shaft-shaft end	lock nut M32x1.25	1	30 Nm +60°, then untighten 30 Nm + 60°
Reverse gear-intermediate gear-thrust bearing with stop	6KT-SHR AM8x75	1	25 Nm
Gear shift drum-shaft end	groove nut M30x1.25	1	60 Nm
Cross shaft-shaft end 4-point bearing	lock nut M32x1.25	1	50 Nm +60°, then untighten 50 Nm + 60°°
Gearbox housing-oil spray pipe	ZYL-SHR M5x10	3	5.6 Nm
Gearbox housing-oil spray pipe	ZYL-SHR M5x15	3	5.6 Nm
Gearbox housing-oil spray pipe	ZYL-SHR M5x15	2	5.6 Nm
Gearbox housing-oil spray pipe	6KT-MU M6	1	9.7 Nm
Gearbox housing-oil spray pipe	spring support M16x1.5	2	35 Nm
Gearbox housing-oil spray pipe	6KT-MU M6	1	9.7 Nm
Z differential housing	ZYL-SHR M6x40	24	15 Nm

6KT-MU = hexagon nut

ZYL-SHR = socket head screw

VSHL-SHR = sealing screw

6KT-SHR = hexagon bolt

Downloaded from www.Manualslib.com manuals search engine

2.8 Transmission dismantling

General: After dismantling, the individual components should be cleaned thoroughly and inspected visually for damage. The transmission is generally dismantled in the opposite order to that described for mounting. But some procedures and work steps are different and will be addressed in detail in the following. Any changes to the sequence can lead to component damage.

Preliminary work

Drain transmission oil

2.8.1 Dismantling of hang-on parts

Dismantle axle shaft flanges with panel puller (1) (Figure 2.8.1.1)

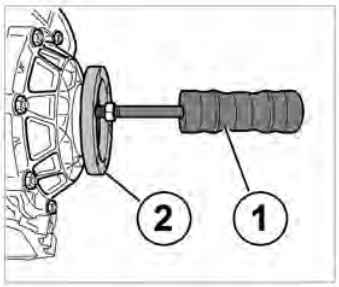

2.8.1.1

Remove the shaft sealing ring of the input flanges with the assembly lever (Figure 2.8.1.2)

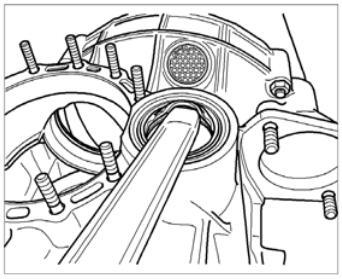
2.8.1.2

Remove gear potentiometer (2)

Remove shift control (3)

Remove the nuts of the pinion shaft lid and drive out the pinion shaft lid with panel puller and tool no. 38 (M6) (Figure 2.8.1.3)

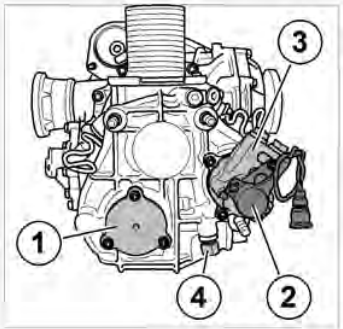

2.8.1.3

Remove the hydraulic lines of the central clutch operator (Figure 2.8.1.4)

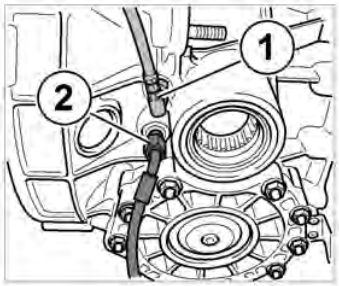

2.8.1.4

Downloaded from www.Manualslib.com manuals search engine

Remove the heat exchanger

WARNING

The system may be pressurized. There is a scalding hazard. The pressure must be reduced in a controlled manner via the connecting couplings (arrow).

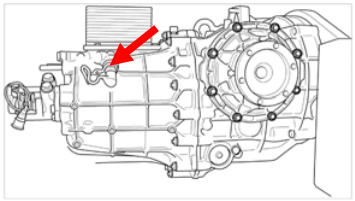

2.8.1.5

2.8.2 Gear housing dismantling

Remove the locking ring (1) of pinion shaft and rotation prevention (Figure 2.8.2.1)

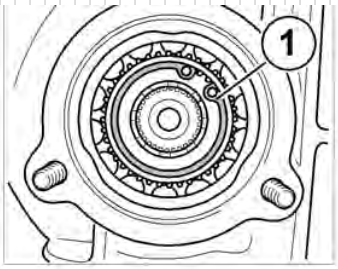

2.8.1.1

By twisting the pinion shaft, engage gear 1 and fix the drive shaft in place with tool no. 19 (Figure 2.8.2.2)

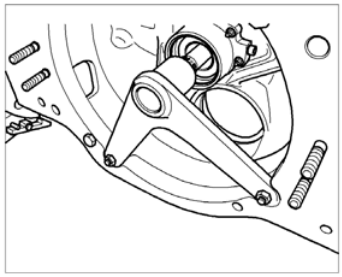

2.8.2.2

Loosen the pinion shaft nut with socket SW 38 Porsche spare part No.: 9R6.450.304.00 (do not remove the pinion shaft nut)

2.8.2.3

Downloaded from www.Manualslib.com manuals search engine

Loosen the nuts of the gear housing flanging

Remove the gear housing. Use a rubber hammer, if necessary (Figure 2.8.2.4)

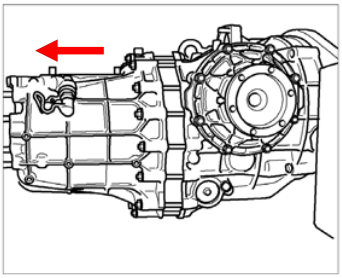

2.8.2.4

2.8.3 Gear set removal

Remove the O ring from the shift rod (Figure 2.8.3.1)

Pull out the shift rod toward the top; ensure that the shift forks do not drop out of the sleeves.

Remove the shift forks

Remove the reverse gear shift fork

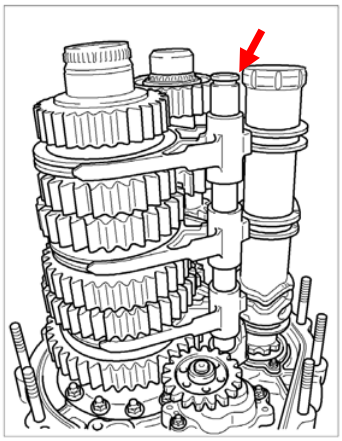

2.8.2.1

Remove the locking ring drive shaft

Remove the pinion shaft nut

Remove gearwheels, needle bearing and guide sleeves, mark the installation position and rotational direction of the gearwheels and sleeves

Downloaded from www.Manualslib.com manuals search engine

2.8.4 Dismantling the shift drum

Loosen the fastening nut for the bushing (4)

Remove the shift drum (7) with the bushing (4)

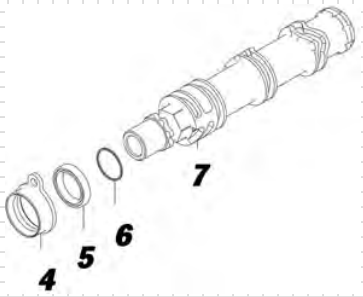

2.8.4.1

Secure the shift drum against twisting with an open-end wrench and loosen the shift drum nut with socket Porsche spare part No.: 997.450.306.00 (Figure 2.8.4.2)

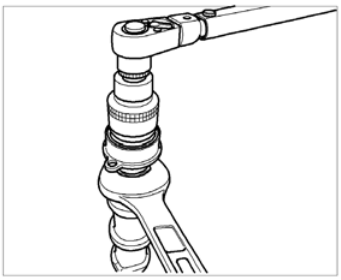
2.8.4.2

2.8.5 Dismantling the locking sleeve

Loosen the nut (2) and (3) and the screw (1) of the locking sleeve and remove the locking sleeve (Figure 2.8.5.1)

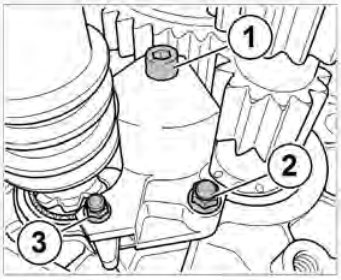

2.8.5.1

Remove the reverse idler gear (3) with the axle (4) (Figure 2.8.5.2)

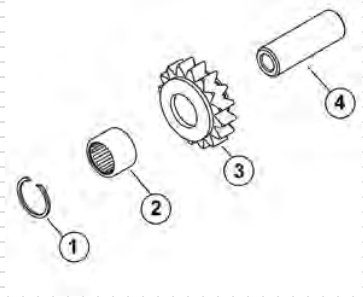

2.8.5.2

Downloaded from www.Manualslib.com manuals search engine

2.8.6 Oil supply

Suction tube

Loosen the nut (1) and remove the suction tube (3) (Figure 2.8.6.1)

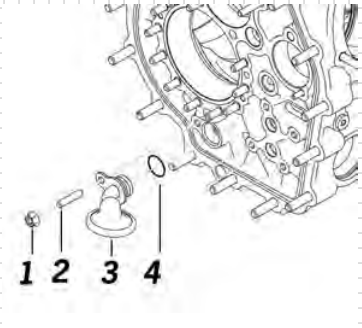

2.8.6.1

Injection tube

Loosen the nut (4) and remove the injection tube (2) with the panel puller (M6) (Figure 2.8.6.2)

NOTE The injection tube must be removed before taking out the shift module because the shift module cannot be pulled out otherwise

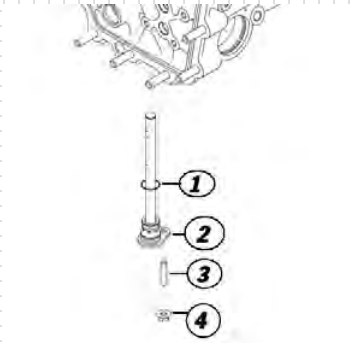

2.8.6.2

Oil pump

Remove the locking ring (1) of the oil pump gearwheel (Figure 2.8.6.3)

Pull off the gearwheel. Keep in mind the insert washers between shaft and gearwheel!

Loosen the fastening nuts of the oil pump and pull off the oil pump

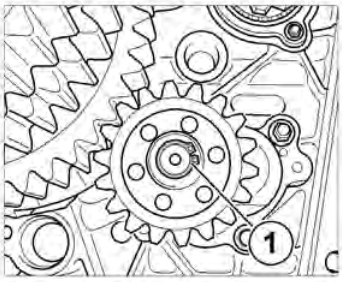

2.8.6.3

Oil filter element

Remove the locking ring (5)

Remove the closure cap (3) with a panel puller

Remove the oil filter element (2)

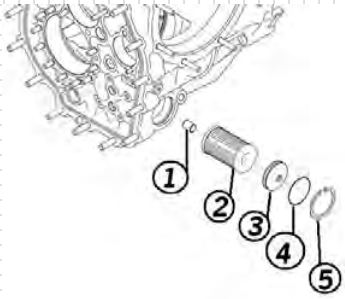

2.8.6.4

Downloaded from www.Manualslib.com manuals search engine

2.8.7 Cross shaft dismantling

Remove the locking ring of the cross shaft lid (Figure 2.8.7.1)

Pull the closure cap with the panel puller (Figure 2.8.7.1)

Remove the cross shaft lid catch

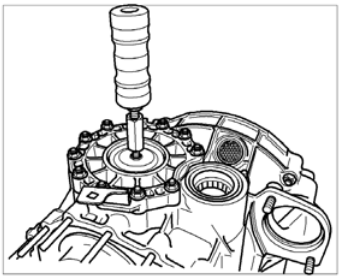

2.8.7.1

Open the cross shaft lid with the assembly lever (Figure 2.8.7.2)

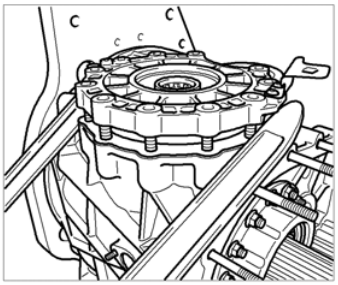

2.8.7.2

Remove adjusting disk P2 of the anti-lash plate (Figure 2.8.7.3)

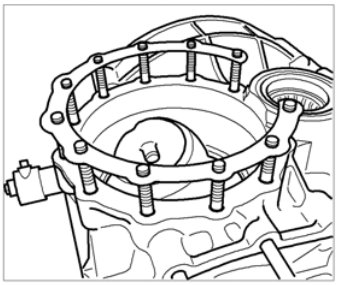

2.8.7.3

Clamp tool no. 49 into the vice and insert the cross shaft (Figure 2.8.7.4)

Fix the cross shaft in place with the nut (arrow)

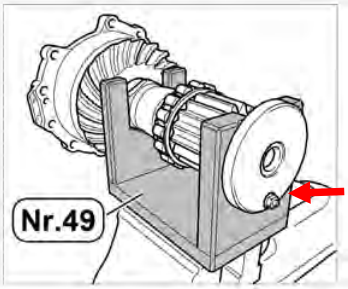

2.8.7.4

Downloaded from www.Manualslib.com manuals search engine

Take out locking ring and rotation prevention (3)

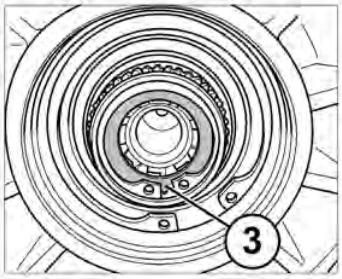

2.8.7.5

Loosen the nut of the cross shaft with socket Porsche spare part No.: 9R6.450.304.00

NOTE Be careful when removing the cross shaft nut. The bearing shell of the four-point bearing is behind it.

Remove the bearing shell of the four-point bearing

Carefully tap out the shaft of the cross shaft lid with a rubber hammer

Press the ring gear out with the hydraulic press. Put the ring gear on aluminum plates (Figure 2.8.7.6)

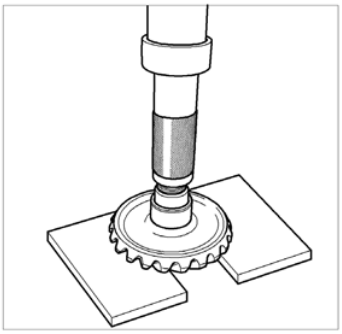

2.8.7.6

Downloaded from www.Manualslib.com manuals search engine

Insert the cross shaft in tool no. 44. Ensure the correct seat of the two insert washers! The insert washers are supported by the cylinder rolls of the bearing (Figure 2.8.7.7)

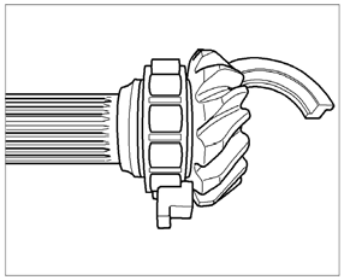

2.8.7.7

Push the cage out of the cylinder roll bearing (cross shaft) with tool no. 44 (Figure 2.8.7.8)

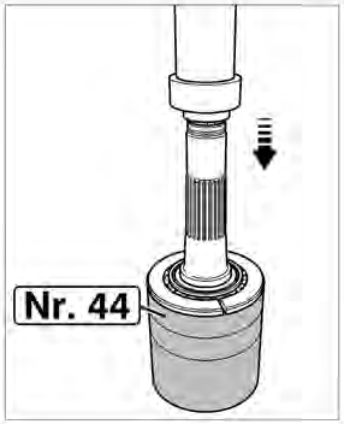

2.8.7.8

Heat the cross shaft lid (1) at 130 °C (266 F) for 30 minutes

Take the outer ring of the cylinder roll bearing (2) out of the cross shaft lid (1) (without applying great force)

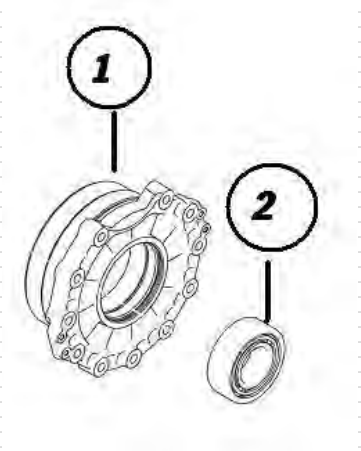

2.8.7.9

Downloaded from www.Manualslib.com manuals search engine

2.8.8 Pinion shaft dismantling

Remove locking ring and mounting lid (arrow) of the pinion shaft in the transmission shell (Figure 2.8.8.1)

Take out the pinion shaft through the assembly opening

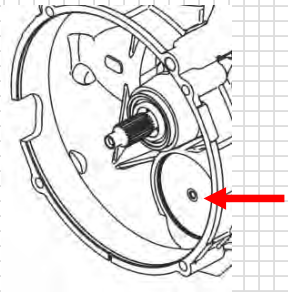

2.8.8.1

Press out the cylinder roll bearing of the pinion shaft with tool no. 44 (Figure 2.8.8.2)

See 2.8.7 cross shaft dismantling

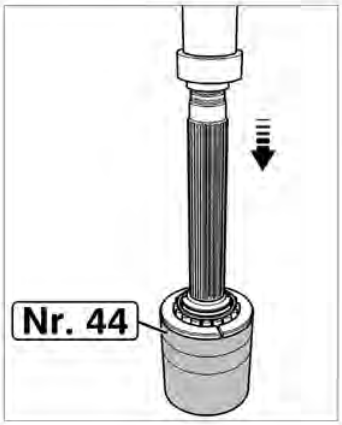

2.8.8.2

Downloaded from www.Manualslib.com manuals search engine

2.8.9 Differential removal

Loosen the differential lid catch evenly using a crisscross pattern and remove it

Remove the differential lid with the assembly lever (Figure 2.8.9.1)

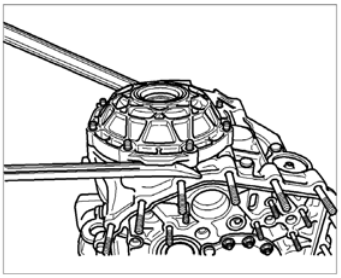

2.8.9.1

Remove the locking ring of the cylinder roll bearing differential lid

Heat the differential lid at 130 °C (266 F) for 30 minutes

Remove the bearing (2) without applying great force

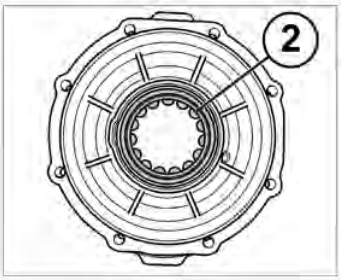

2.8.9.2

Remove the differential from the gearbox housing (Figure 2.8.9.3)

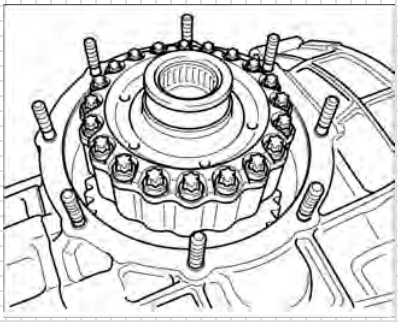

2.8.9.3

Loosen the differential lid screws evenly using a crisscross pattern

Screw two panel pullers on the differential lid and separate the lid from the housing

NOTE

The inner threads in the differential lid must be cut with a die and degreased before the reconstruction.

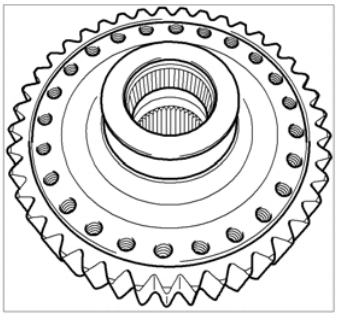

2.8.9.4

Downloaded from www.Manualslib.com manuals search engine

Remove snap ring and needle cage from the differential housing (Figure 2.8.9.5)

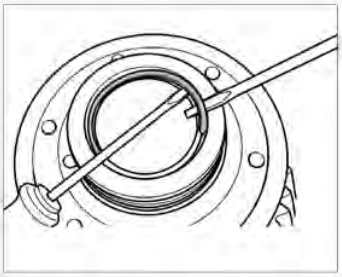

2.8.9.1

2.8.10 Central clutch operator removal

Remove the central clutch operator (Figure 2.8.10.1)

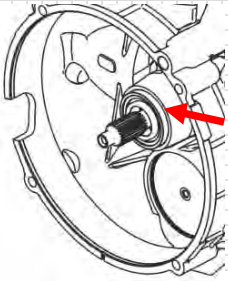

2.8.10.2

2.8.11 Connecting shaft dismantling

Drive out the connecting shaft with the panel puller (Figure 2.8.11.1)

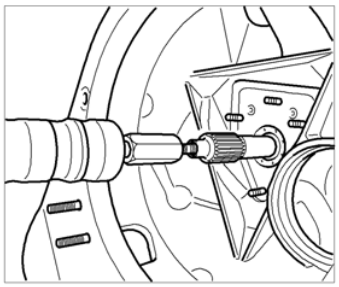

2.8.11.1

Downloaded from www.Manualslib.com manuals search engine

2.8.12 Drive shaft dismantling

Take out the drive shaft locking ring (1)

Use the shortened locking ring pliers (Figure 2.8.12.2). The handles of the pliers are shortened so that the pliers can be used inside the gearbox housing.

Take out the thrust plate (2)

Remove the drive shaft (3) from the gearbox housing

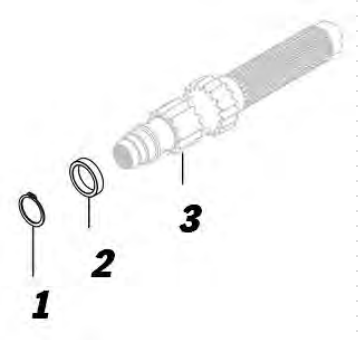

2.8.12.1

2.8.12.2

Downloaded from www.Manualslib.com manuals search engine

2.8.13 Bearing dismantling

Gearbox housing

Remove the needle bearing of the cross shaft with puller HAZET 788-37 (Figure 2.8.13.1)

NOTE The pulling off motion requires the utmost care. The gearbox housing could be damaged in the process!

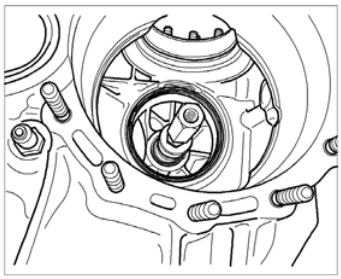

2.8.13.1

Clean the gearbox housing and remove any oil

Heat the gearbox housing at 130 °C (266 F) for 30 minutes

Remove the outer rings of the bearings in the housing. The outer rings of the bearing can be dismantled without applying great force.

Outer ring of the drive shaft bearing (Figure 2.8.13.2)

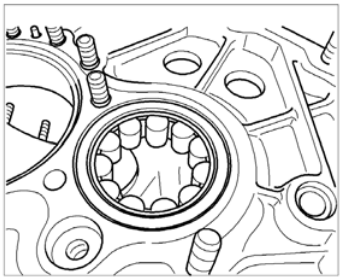

2.8.13.2

Screw the pinion shaft retaining frame (4) off the gearbox housing

Take out the four-point bearing (2)

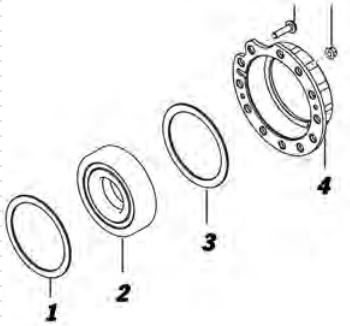

2.8.13.3

Remove the outer ring of the pinion shaft cylinder roll bearing (Figure 2.8.13.4)

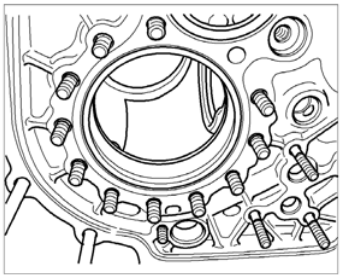

2.8.13.4

Downloaded from www.Manualslib.com manuals search engine

Outer ring of the axle shaft flange needle bearing, left side (arrow)

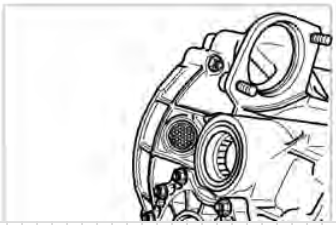

2.8.13.5

Drive out the differential cylinder roll bearing (Figure 2.8.13.5) with removal tool HAZET 788 – 70 (3) and panel puller

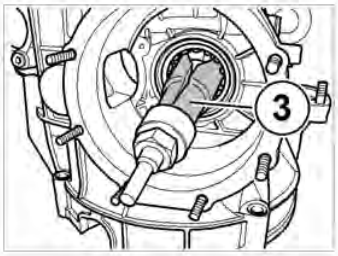

2.8.13.6

Press out the connecting shaft needle bush in the direction of the arrow with tool no. 46 (Figure 2.8.13.7)

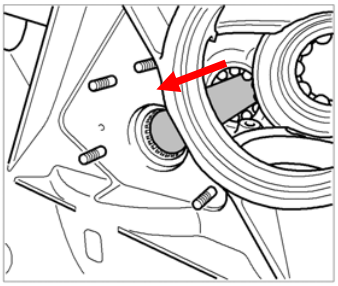

2.8.13.7

Gear housing

Remove the baffle of the bearings (4)

Heat the gear housing at 130 °C (266 F) for 30 minutes

Push out the outer ring of the drive shaft (2)

Push out the outer ring of the pinion shaft (3)

Push out the ball bearing of the shift drum (1)

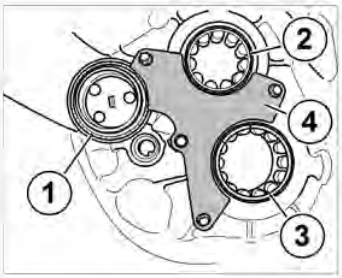

2.8.13.8

Downloaded from www.Manualslib.com manuals search engine

2.9 Transmission assembly

2.9.1 Gearbox housing pre-assembly

Before putting together the transmission, all components of the transmission must be cleaned and degreased thoroughly. In addition, a visual inspection must be carried out. Especially the visual check of the oil holes is necessary to ensure perfect function of the transmission. Because some work processes in these instructions are linked with each other, completing individual work processes is possible only keeping the complete assembly instructions in mind.

Mounting studs

Before mounting the studs, the thread holes must first be cleaned thoroughly with petroleum benzine (brake cleaner) and afterwards with acetone. The gearbox housing and the gear housing must finally be blown out with oil-free compressed air. A special installation tool must be used to screw in the studs. The studs are not tightened with a turning torque. After the studs are inserted, the adhesive connections have to set in an oven at 130°C (266 F) for approx. 40 minutes. The heat of the housing can be used for the next work step (inserting the bearings).

2.9.1.1

Cross shift lid studs

Dimensions:	M8x30
Porsche spare part No.:	999.062.044.01
Projection:	30 mm (1.18”)
Adhesive:	Loctite 2701 green
Thread position:	Screw in short thread

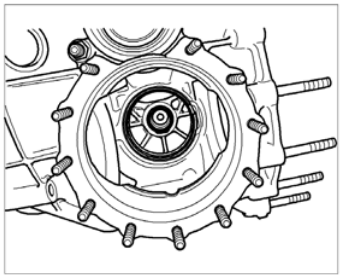
2.9.1.2

Downloaded from www.Manualslib.com manuals search engine

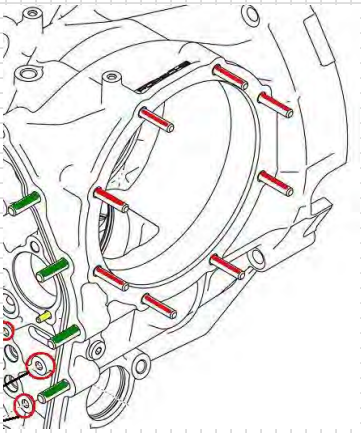

2.9.1.3

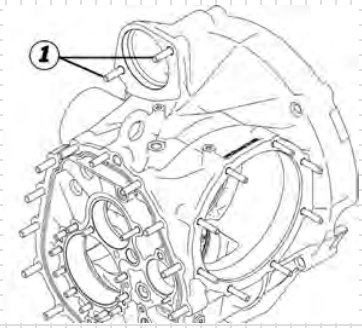

2.9.1.4

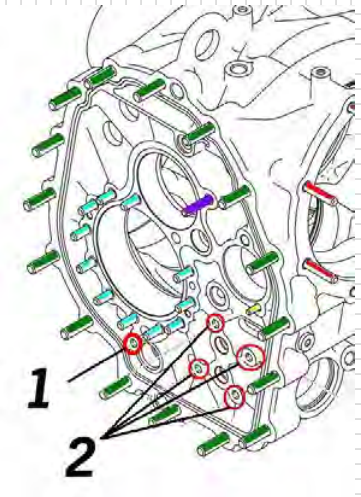

2.9.1.5

Differential lid studs (red)

Dimensions:	M8x30
Porsche spare part No.:	999.062.044.01
Projection:	30 mm (1.18”)
Adhesive:	Loctite 2701 green
Thread position:	Screw in short thread

Starter studs (1)

Dimensions:	M10x22
Porsche spare part No.:	999.062.014.01
Projection:	24 mm (0.94”)
Adhesive:	Loctite 2701 green
Thread position:	Screw in short thread

Gear housing connection studs (green)

Dimensions:	M8x50
Porsche spare part No.:	999.062.012.01
Projection:	50 mm (1.97”)
Adhesive:	Loctite 2701 green
Thread position:	Screw in short thread

Downloaded from www.Manualslib.com manuals search engine

Retaining frame pinion shaft studs (light blue)

Dimensions:	M8x26
Porsche spare part No.:	999.062.311.01
Projection:	14.5 mm (5.71”)
Adhesive:	Loctite 2701 green
Thread position:	Screw in long thread

Oil pump studs (2)

Dimensions:	M6x28
Porsche spare part No.:	999.062.100.02
Projection:	27 mm (1.06”)
Adhesive:	Loctite 2701 green
Thread position:	Screw in short thread

Screw in suction tube screw stud (1)

Dimensions:	M6x10
Porsche spare part No.:	999.062.001.01
Projection:	9 mm (0.35”)
Adhesive:	Loctite 2701 green
Thread position:	Screw in long thread

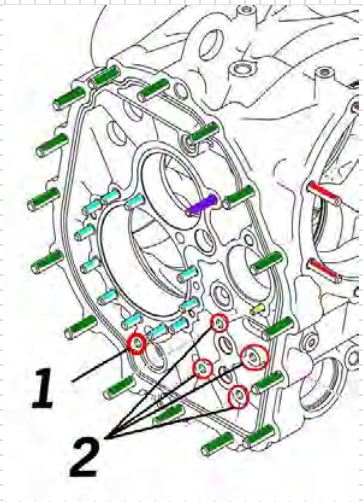

2.9.1.6

Downloaded from www.Manualslib.com manuals search engine

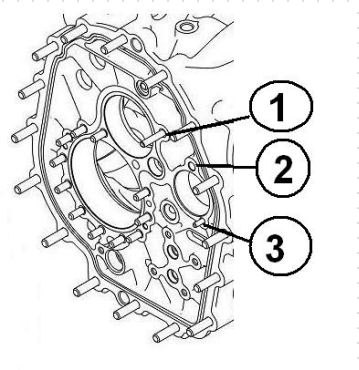

2.9.1.7

Shift drum stud (1)

Dimensions:	M6x10
Porsche spare part No.:	999.062.001.01
Projection:	11 mm (0.43”)
Adhesive:	Loctite 2701 green
Thread position:	Screw in long thread

Shift drum stud (2)

NOTE

Bushing Porsche spare part No.: 991.303.498.9B must first be pressed in.

Dimensions:	M6x35
Porsche spare part No.:	999.062.093.01
Projection:	29 mm (1.14”)
Adhesive:	Loctite 2701 green
Thread position:	Screw in long thread

Locking sleeve screw connection stud

Dimensions:	M8x30
Porsche spare part No.:	999.062.044.01
Projection:	27.5 mm (1.083”)
Adhesive:	Loctite 2701 green
Thread position:	Screw in long thread

Downloaded from www.Manualslib.com manuals search engine

Central clutch operator screw connection stud (arrow)

Dimensions:	M6x18
Porsche spare part No.:	999.062.003.01
Projection:	19 mm (0.75”)
Adhesive:	Loctite 2701 green
Thread position:	Screw in long thread

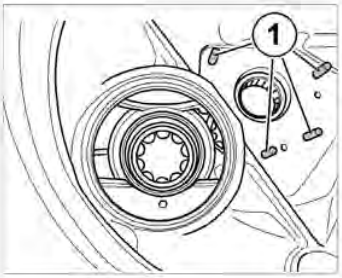

2.9.1.8

Injection tube stud

Dimensions:	M6x10
Porsche spare part No.:	999.062.001.01
Projection:	10 mm (0.39”)
Adhesive:	Loctite 2701 green
Thread position:	Screw in long thread

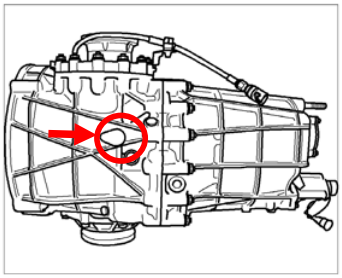

2.9.1.9

Downloaded from www.Manualslib.com manuals search engine

Bearing assembly

Inserting the bearings requires the heating of the gearbox housing analogous to the setting of the adhesive connection (see above). All bearings must be inserted quickly before the housing has cooled off. To ensure the proper seat of the bearings, all bearings must be tapped with an appropriate tool after the housing has cooled off.

WARNING Heat-resistant gloves must be worn for any work with hot items because of the risk of burning.

Drive shaft bearing

Dimensions:	34x62x17
Type:	Cylinder roll bearing
Porsche spare part No.:	991.302.283.9A
Tool:	No. 1

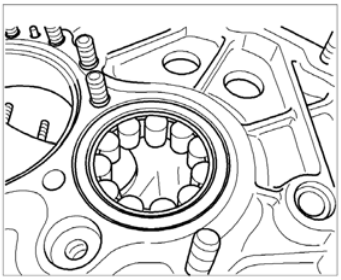

2.9.1.10

Pinion shaft cylinder roll bearing (outer ring)

Dimensions:	40x90x23
Type:	Cylinder roll bearing
Porsche spare part No.:	991.302.295.9B
Tool:	No. 3

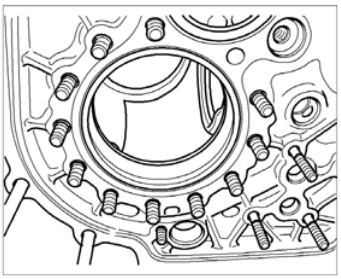

2.9.1.11

Input shaft / connecting shaft bearing

Dimensions:	30x37x16
Type:	Needle bearing
Porsche spare part No.:	999.201.210.00
Tool:	No. 14

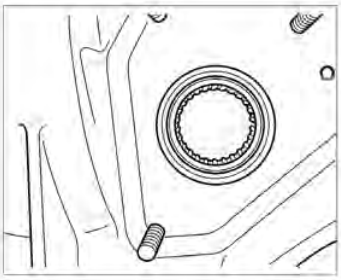

2.9.1.12

Downloaded from www.Manualslib.com manuals search engine

Cross shaft bearing

Dimensions:	28x37x30
Type:	Needle bearing
Porsche spare part No.:	991.302.491.9A
Tool:	No. 5

Insert locking ring (37x1.5) Porsche spare part No.: 991.302.781.9A

NOTE Insert locking ring (1) at a 180° offset to the opening (2)!

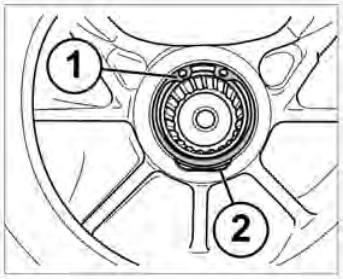

2.9.1.13

Outer ring of cross shaft bearing

Dimensions:	50x90x20
Type:	Cylinder roll bearing
Porsche spare part No.:	991.302.492.9A
Tool:	No. 6

Locking ring (90x2.5) Porsche spare part No.: 999.152.095.01

NOTE Insert locking ring at a 90° offset to the opening!

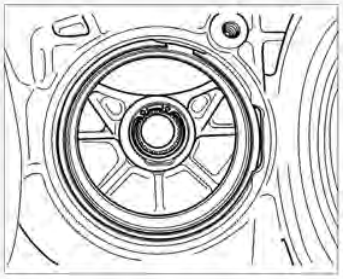
2.9.1.14

Needle bearing for long axle flange (1)

Dimensions:	40x55x22
Type:	Needle bearing
Porsche spare part No.:	991.332.643.9A
Tool:	No. 9

Press in all the way to the stop.

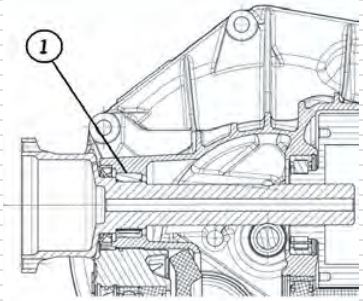

2.9.1.15

Downloaded from www.Manualslib.com manuals search engine

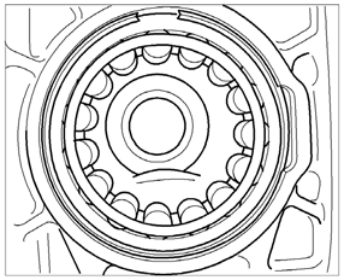

2.9.1.16

Differential cylinder roll bearing in the gearbox housing

Dimensions:	59,5x90x23
Type:	Cylinder roll bearing
Porsche spare part No.:	991.332.645.9A
Tool:	No. 8b

With locking ring Porsche spare part No.: 999.152.138.01

NOTE Insert locking ring at a 90° offset to the opening!

Downloaded from www.Manualslib.com manuals search engine

Pressing in the bushings

Pressing in the bushings requires heating the housing (see 2.9.1 Pre-assembly / bearing assembly).

WARNING Heat-resistant gloves must be worn for any work with hot items because of the risk of burning.

Pressing in the bushing for the oil filter (1)

Porsche spare part No.: 991.301.307.9A

Adhesive: Loctite 638

Press in up to the limit

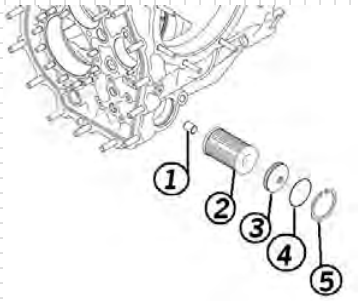

2.9.1.17

Gearbox housing-gear housing screw connection bushing (12x6x16)

Press in fitting sleeve Porsche spare part No.: 991.301.643.9A

Pinion shaft retaining frame locating pins

Porsche spare part No.: 991.301.645.9B

Press in up to the limit

Attach perforated panel of clutch bleeding Porsche spare part No.: 991.116.710.9A and secure with locking ring Porsche spare part No.: 991.302.781.9A

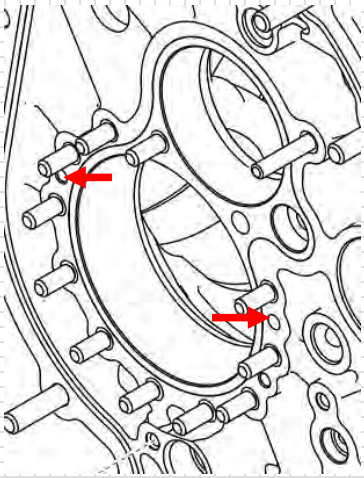
2.9.1.8

Downloaded from www.Manualslib.com manuals search engine

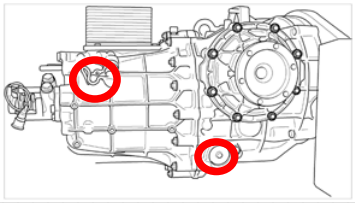

2.9.1.19

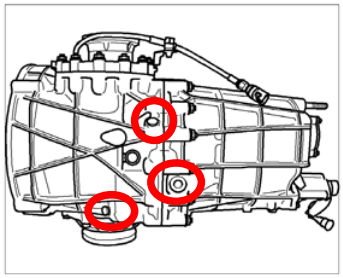

2.9.1.20

Screwing in the sealing plug:

General

All sealing plugs must be sealed with surface sealant Loctite 574. Apply sealant thinly on the thread surface for this.

Oil hole closure

Dimensions:	M12x1.5 alu
Porsche spare part No.:	900.219.006.30
Torque:	9 Nm (6.6 ft-lb)

Attach with sealing ring Porsche spare part No.: 900.123.101.30 (12x18).

Plug without pressure sensor

Dimensions:	M10x1
Porsche spare part No.:	900.219.007.01
Torque:	9 Nm (6.6 ft-lb)

Use sealing ring 10x14x1 Porsche spare part No.: 900.123.003.20.

Downloaded from www.Manualslib.com manuals search engine

Mounting hydraulic connections for the clutch:

NOTE Use Loctite 574 orange.

Bleeding (2)

Porsche spare part No.:	962.355.522.00
Sealing ring Porsche spare part No.:	900.123.003.20

Pressure line (1)

Porsche spare part No.:	999.105.027.30
Sealing ring Porsche spare part No.:	900.123.003.30

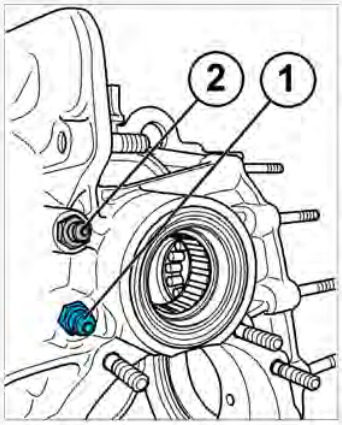

2.9.1.21

Downloaded from www.Manualslib.com manuals search engine

2.9.2 Gear housing pre-assembly

General

Before assembling the gear housing, all components must be cleaned and degreased thoroughly. Furthermore, a visual inspection must be carried out. Especially all oil holes must be checked to ensure the perfect running of the transmission. The gear housing must finally be blown out with compressed air.

The studs must be cleaned thoroughly with petroleum benzine. After the studs are inserted, the gear housing has to set in an oven for approx. 40 minutes at 130°C (266 F).

WARNING Heat-resistant gloves must be worn for any work with hot items because of the risk of burning.

Screwing in the gear housing studs

Heat exchanger studs (green)

Dimensions:	M6x15
Porsche spare part No.:	999.062.002.02
Projection:	14 mm (0.55”)
Adhesive:	Loctite 2701 green
Thread position:	Screw in long thread

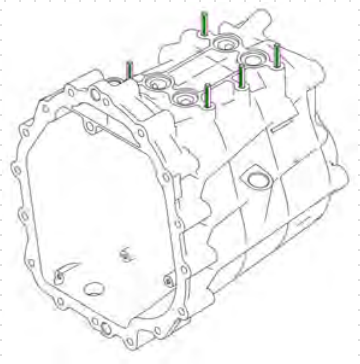

2.9.2.1

Downloaded from www.Manualslib.com manuals search engine

Bearing baffle studs

Dimensions:	M5x10
Porsche spare part No.:	999.062.136.01
Projection:	10 mm (0.39”)
Adhesive:	Loctite 2701 green
Thread position:	Screw in long thread

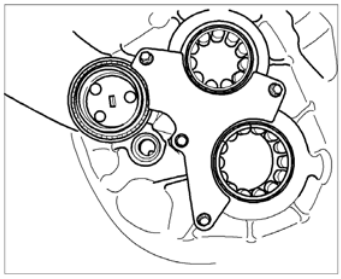

2.9.2.1

Threaded pin of the baffle

Dimensions:	M5x20 12.9
Porsche spare part No.:	999.069.005.09
Projection:	7 mm (0.27”)
Adhesive:	Loctite 2701 green

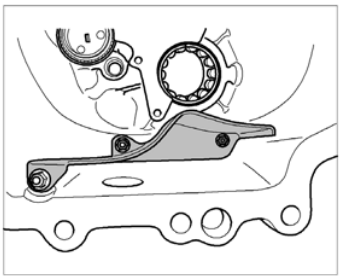

2.9.2.2

Shift module screw connection stud (26)

Dimensions:	M6x18
Porsche spare part No.:	999.062.003.01
Projection:	17 mm (0.67”)
Adhesive:	Loctite 2701 green

Thread position: Screw in long thread

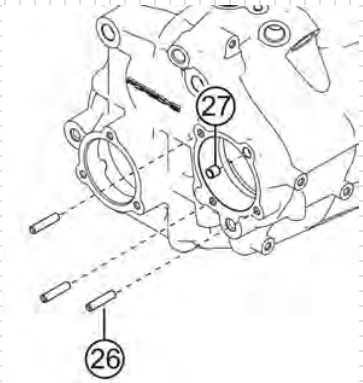

2.9.2.3

NOTE One hole (top right) is left for one bushing (27).

Downloaded from www.Manualslib.com manuals search engine

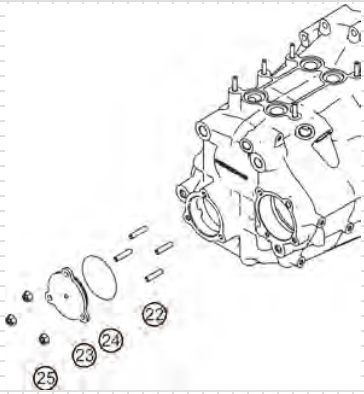

2.9.2.4

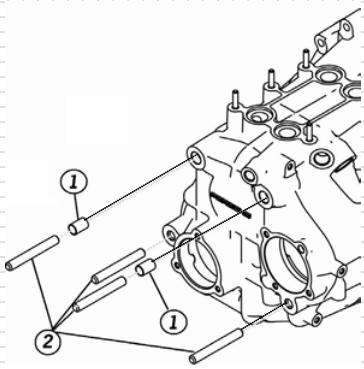

2.9.2.5

Closure cap / pinion shaft stud (22)

Dimensions: M6x10

Porsche spare part No.: 999.062.001.01

Projection: 11mm (0.433")

Adhesive: Loctite 2701 green

Thread position: Screw in long thread

Gearbox bracket stud (2)

- Top:

Dimensions: M10x52 10.9

Porsche spare part No.: 900.060.107.01

Projection: 45 mm (1.77")

Adhesive: Loctite 2701 green

Thread position: Screw in short thread

NOTE Press in fitting sleeve (1) Porsche spare part No.: 991.301.641.9B up to the limit

- Bottom:

Dimensions: M10x45 10.9

Porsche spare part No.: 999.062.292.01

Projection: 45 mm (1.77")

Adhesive: Loctite 2701 green

Thread position: Screw in short thread

Downloaded from www.Manualslib.com manuals search engine

Pressing in gear housing bearings and bushings

After the studs are inserted, the gear housing has to set in an oven for approx. 40 minutes at 130°C (266 F). The heat is also required for the next work step (inserting the bearings).

All bearings must be inserted quickly before the housing has cooled off. To ensure the proper seat of the bearings, all bearings must be tapped with an appropriate tool after the housing has cooled off.

WARNING Heat-resistant gloves must be worn for any work with hot items because of the risk of burning.

Labels of outer and inner bearing rings generally point in the direction of the pressing tools during the pressing in process!

Gearbox bleeding bushing

Porsche spare part No.: 02A.301.473

Adhesive: Loctite 638

Press in up to the limit

Drive shaft cylinder roll bearing (2)

Dimensions: 34x62x17

Porsche spare part No.: 991.302.283.9A

Tool: No. 1

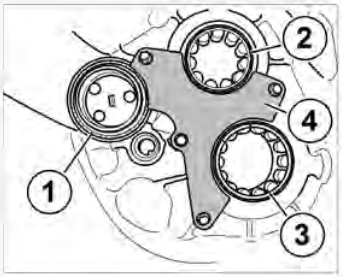

2.9.2.6

Downloaded from www.Manualslib.com manuals search engine

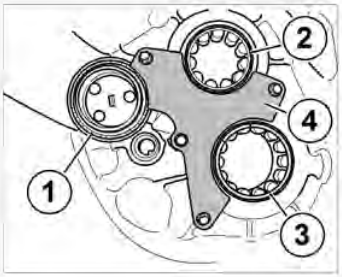

2.9.2.7

Pinion shaft cylinder roll bearing (3)

Dimensions: 44x72x17

Porsche spare part No.: 991.302.291.9A

Tool: No. 4

Grooved ball bearing of the shift drum (1)

Dimensions: 50x65x7

Porsche spare part No.: 900.052.225.00

Tool: No. 31

Screw connection of baffle M5

Porsche spare part No.: 900.817.005.02

Torque: 6 Nm (4.4 ft-lb)

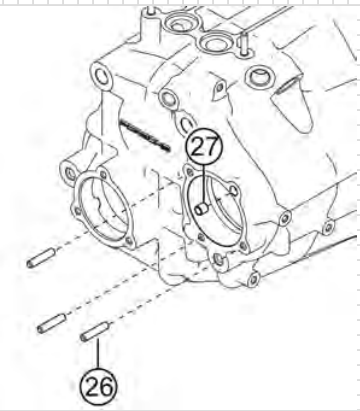

2.9.2.8

Shift module bushing (27)

Dimensions: 6x8x8

Porsche spare part No.: 991.301.357.9B

Press in up to the limit

Downloaded from www.Manualslib.com manuals search engine

Gearbox bracket bushing (1)

Dimensions: 13x6x13.5

Porsche spare part No.: 991.301.641.9A

Press in up to the limit

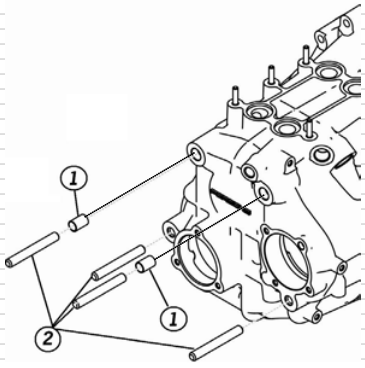

2.9.2.9

Top sealing plug

Dimensions: M16x1.5

Porsche spare part No.: 900.219.004.30

Torque: 20 Nm (14.8 ft-lb)

Adhesive: Loctite 574 orange

Sealing ring Porsche spare part No.: 900.123.018.30

Sealing plug

Dimensions: M12x1.5

Porsche spare part No.: 900.219.006.30

Torque: 9 Nm (6.6 ft-lb)

Adhesive: Loctite 574 orange

Sealing ring Porsche spare part No.: 900.123.101.30

Temperature sensor (arrow)

Porsche spare part No.: 996.606.224.9A

Torque: 15 Nm (11 ft-lb)

Screw in the sealing ring included in the scope of delivery with Loctite 574

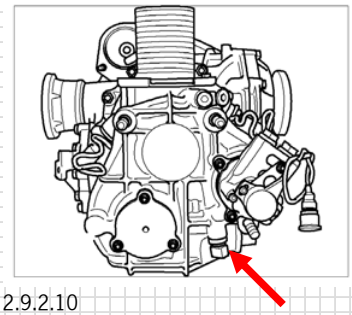
2.9.2.10

Downloaded from www.Manualslib.com manuals search engine

2.9.3 Differential lid pre-assembly

Heat the lid in the oven to 130°C (266 F) for 40 minutes

WARNING Heat-resistant gloves must be worn for any work with hot items because of the risk of burning.

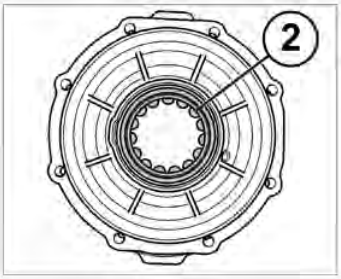

2.9.3.1

Cylinder roll bearing (2)

Dimensions:	54,5x85x19
Porsche spare part No.:	991.332.641.9A
Tool:	No.8/8a

NOTE Point the label to the top and secure with snap ring Porsche spare part No.: 999.152.117.01. Mount the locking ring at a 180° offset to the housing opening.

Downloaded from www.Manualslib.com manuals search engine

2.9.4 Pinion shaft bearing assembly

Place spacing washer (1) H1 2 mm on the gearbox housing with the oil grooves; the oil grooves must be on the side of the four-point bearing (2).

NOTE The oil grooves serve to lubricate the bearing. A reversal of the installation direction leads to bearing damage from lack of lubrication.

Put on the four-point bearing (2) with the label in the direction of the retaining frame pinion shaft (4)

Screw the pinion shaft retaining frame in place on the gearbox housing with 4 nuts (5)

NOTE The adjusting disk H2 (3) is not inserted yet because its thickness is not determined until the next step.

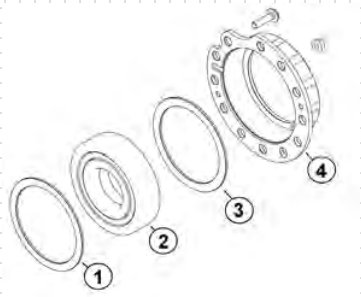

2.9.4.1

Determining adjusting disk H2

The four-point bearing must be fitted with a compression of 0.03 mm in the retaining frame of the pinion shaft. The compression is calculated as follows:

Fix the probe indicator (1) in place on the retaining frame with bracket (3) no. 37.

Apply probe indicator needle (2) to four-point bearing with prestressing through the hole in the retaining frame.

Check the clearance between retaining frame and bearing; move the bearing evenly from the bottom stop to the upper stop (retaining frame) for that (direction of the arrow).

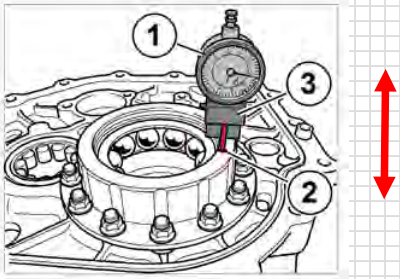

2.9.4.2

Add the measured free travel to the compression (0.03-0.05) and insert an appropriate adjusting disk H2 (3) between retaining frame and four-point bearing. Base washer H2 has a thickness of 2.18 mm.

Put on the retaining frame

Loosely put on the nut!

NOTE Do not tighten the retaining frame nuts yet. The four-point bearing must first be centered (see chapter 2.9.5)!

Downloaded from www.Manualslib.com manuals search engine

2.9.5 Pinion shaft

Heat the interior of the cylinder roll bearing at 130° C (266 F) for 20 minutes

Press the inner ring on the pinion shaft up to the limit (Figure 2.9.5.1)

Insert the base adjusting disk (1) (2.00 mm P1) (Figure 2.9.5.1)

Put on the bottom inner ring of the four-point bearing

Insert the pinion shaft through the gearbox housing

Put on the top inner ring of the four-point bearing

Put on mounting ring no. 25 (reverse gear replacement)

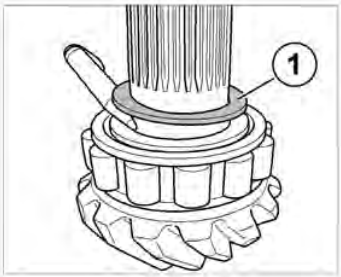

2.9.5.1

NOTE

The mounting ring no. 25 in this case only serves as a substitute and is replaced with the reverse gear wheel (spur gear) during final assembly (2.9.7 Assembly of gear sets).

Put on the three guide sleeves (1), the position of the sleeves is not relevant here (Figure 2.9.5.2)

Use tool no. 27 (counter torque wrench) for the outer guide sleeve

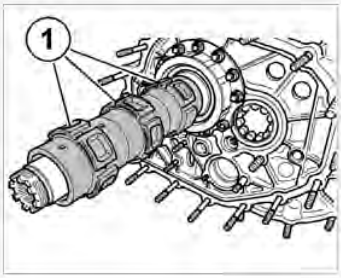

2.9.5.2

Lubricate the inner ring of the pinion shaft (1) well and put it on (Figure 2.9.5.3)

Lubricate the pinion shaft nut well and put it on loosely (do not tighten yet)

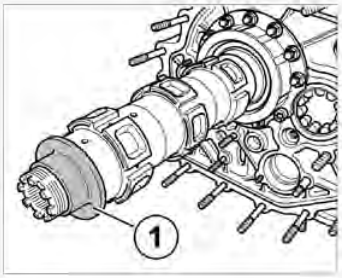

2.9.5.3

Downloaded from www.Manualslib.com manuals search engine

Put on the cutted gear housing and fix it in place with 4 nuts (Figure 2.9.5.5)

Tightening the pinion shaft nut:

NOTE The counter torque wrench no. 27 touches the cutted gear housing and thus fixes the pinion shaft in place. (Figure 2.9.5.5)

Tightening instructions:

Use tool no. 20 (Figure 2.9.5.4)

Pre-tightening: 30 Nm (22 ft-lb) + 60° angle of rotation

Loosening

Final tightening: 30 Nm (22 ft-lb) + 60° angle of rotation

Tighten the pinion shaft retaining frame with 11 nuts using a crisscross pattern

Porsche spare part No.:	900.817.002.02
Torque:	33 Nm (24.3 ft-lb)
Adhesive:	Loctite 243

The four-point bearing is now centered.

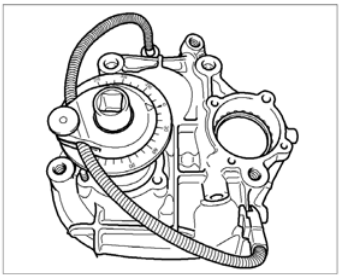

2.9.5.4

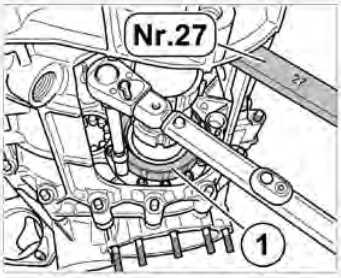

2.9.5.4

Downloaded from www.Manualslib.com manuals search engine

2.9.6 Pinion shaft position adjustment

Adjustment is done in two steps. In the first step, the distance between the top of the bevel gear and the projection of the gearbox housing opening (blue arrow) is determined. This is the measurement that the pinion shaft must ultimately be set to.

The actual distance between gearbox housing opening and the top of the bevel gear is measured in the second step. The difference between the two measurements is adjusting measurement P1.

Adjusting disk P1 is used to precisely adjust the position of the bevel gear in relation to the ring gear. There is a manufacturing dimension (2), e.g. 75.002, measured by the manufacturer on the gearbox housing. This measurement is the distance between the gearbox housing opening and the shift module axis (red dotted line). The measurement from the bevel gear top to the shift module axis (red dotted line) is always **43 mm** (no tolerance) which also enters into the calculation. Measurement requires a magnetic disc (thickness = 5mm) and a measuring plate (thickness = 20mm); the resulting thickness of 15 mm also enters into the calculation. (Measuring plate 20mm – magnetic disc 5 mm = **15 mm**).

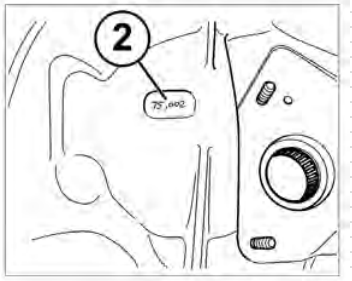

2.9.6.1

Calculation process

Calculation example: 75.002 + **15** + **43** = 133.002 mm. This calculated measurement of the installation position of the pinion shaft must now be compared with the actual measured distance and then adjusted accordingly.

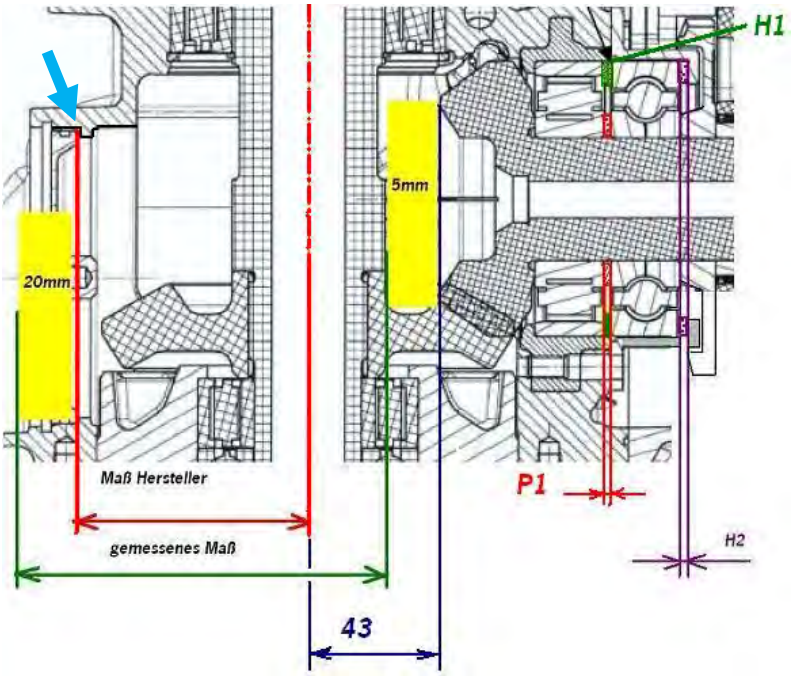

2.9.6.2

Downloaded from www.Manualslib.com manuals search engine

Measurement process

Put the transmission in an upright position

Put magnetic disc (Figure 2.9.5.4) (5 mm) no. 28 on the pinion shaft head (bevel gear). Put measuring plate (1) (20 mm) no. 23 on the gearbox housing. With the depth gauge (2), measure the distance (green arrow in the diagram) e.g. 132.98 mm. This value corresponds to the measurement actually taken and must be compared with the measurement calculated above.

133.002 mm -132.98 mm = 0.022 mm (difference) i.e. the measurement is not within the tolerance and disk P1 must be exchanged.

Tolerance = 0.00 to +0.02

The adjusting disk P1 is inserted between cylinder roll bearing and four-point bearing (see Figure 2.9.5.3.) Observe the assembly of the pinion shaft in 2.9.5. The basic P1 disk used in chapter 2.9.5 is then replaced with the calculated P1 disk.

Subsequently repeat the measurement process

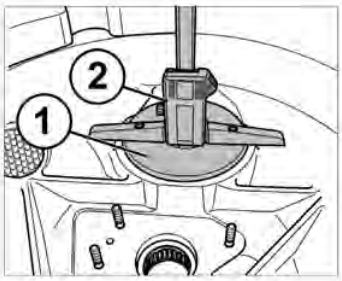

2.9.6.3

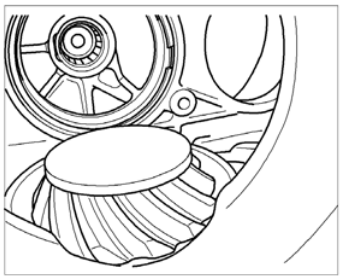
2.9.6.4

NOTE

During the loosening of the pinion shaft, the auxiliary housing must always be tightened firmly. The bearing could be damaged otherwise .

Loosening the pinion shaft nut

Remove the cutted gear housing

Remove the pinion shaft

After correctly adjusting the pinion shaft position, the process for the assembly of the retaining frame described in chapter 2.9.4 must be repeated.

Finally tighten the retaining frame of the pinion shaft (3) with nuts (2) and flathead screw (1) with 33 Nm (24.3 ft-lb) and use Loctite 270

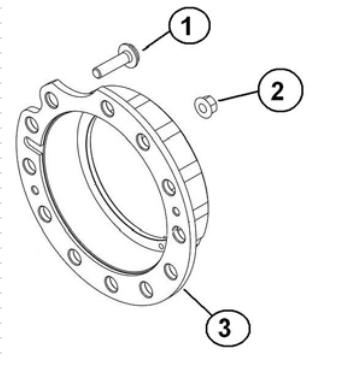

2.9.6.5

Downloaded from www.Manualslib.com manuals search engine

2.9.7 Assembly of gear sets

During the fitting of the gear sets, the gearbox housing is in the position where the upper side of the transmission points to the right.

Lubricate the drive shaft bearing running surfaces (3) well

Insert the drive shaft (3) in the gearbox housing

Push on thrust plate (2) Porsche spare part No.: 991.302.381.9C

Secure with locking ring (1) (30x1.5) Porsche spare part No.: 900.041.015.01; use the shortened snap ring pliers (Figure 2.9.6.2).

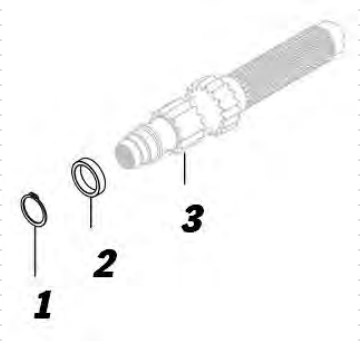

2.9.7.1

2.9.7.2

Moisten the pinion shaft with oil and insert it with the bottom inner ring of the four-point bearing through the assembly opening in the transmission shell (Figure 2.9.7.3)

Put on the top inner ring of the four-point bearing (arrow)

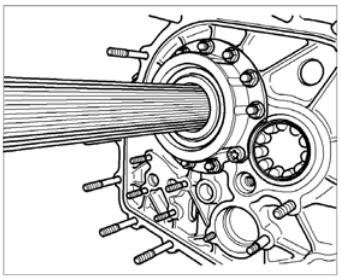
2.9.7.3

Downloaded from www.Manualslib.com manuals search engine

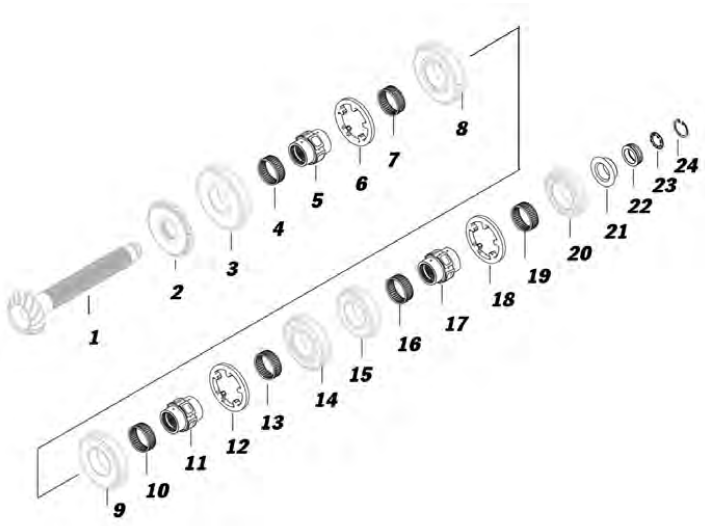

2.9.7.5

Push the spur gear of the reverse gear (2) on pinion shaft Porsche spare part No.: 991.302.225.9A. In doing so, point the labeled side in the direction of idler gear 1st gear, the conically beveled side points in the direction of the gearbox housing (Figure 2.9.7.5)

Insert idler gear 1st gear (3) without the bearing, the claws then point away from the pinion head (Figure 2.9.7.5)

Insert idler gear bearing (needle cage) (4) (Figure 2.9.76)

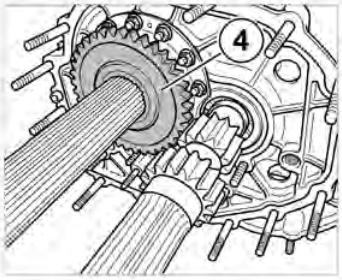

2.9.7.4

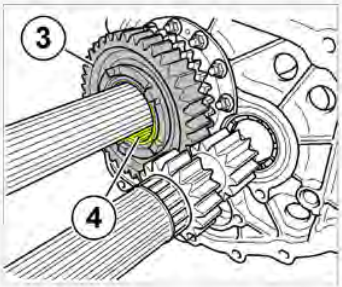

2.9.7.6

Moisten the guide sleeve running surface (5) with oil

Insert the guide sleeve (5) (Figure 2.9.7.7) (maintain the rotational direction for reuse) Porsche spare part No.: 991.304.221.9B. In doing so, please ensure that the oil holes of pinion shaft and guide sleeve are not directly on top of each other (extensive oil supply).

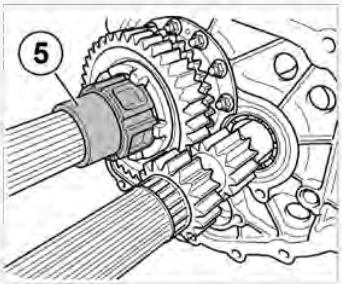

2.9.7.7

Downloaded from www.Manualslib.com manuals search engine

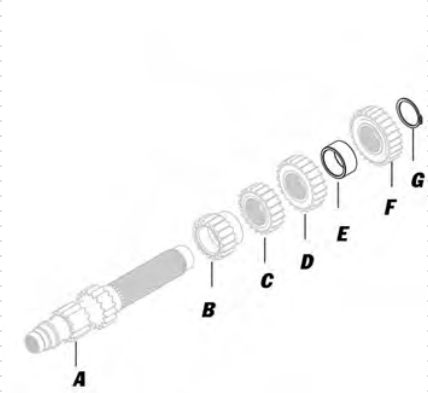

2.9.7.8

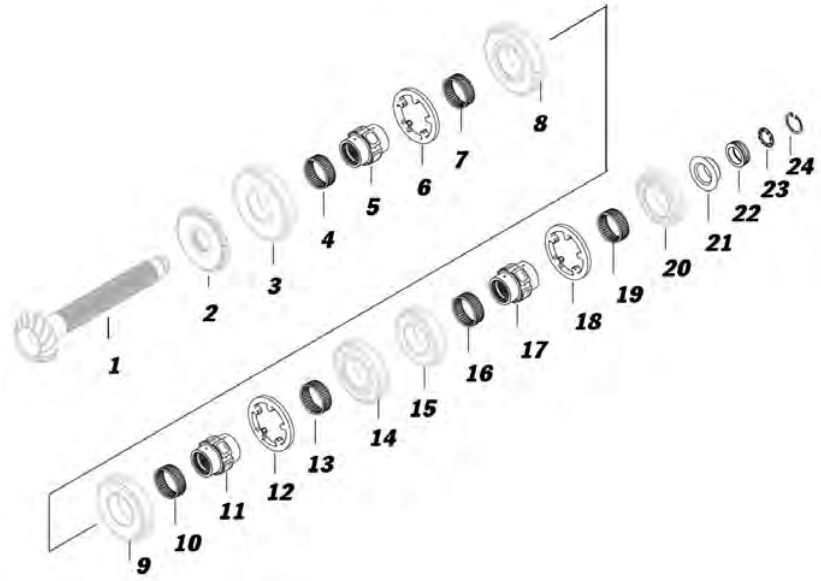

2.9.7.9

Insert selector sleeve (6) Porsche spare part No.: 991.304.631.9A with the label facing outward (Figure 2.9.7.10)

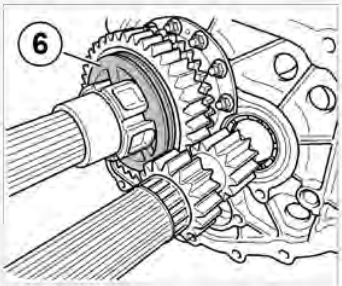

2.9.7.10

Insert the 2nd gear idler gear (8) with the idler gear bearing (7), the claws point toward the selector sleeve (6) here (Figure 2.9.7.11)

Push the fixed gear 3rd gear (B) on the drive shaft (A) (Figure 2.9.7.11)

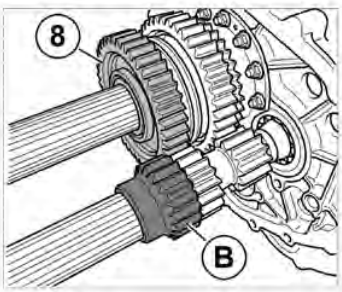

2.9.7.11

Downloaded from www.Manualslib.com manuals search engine

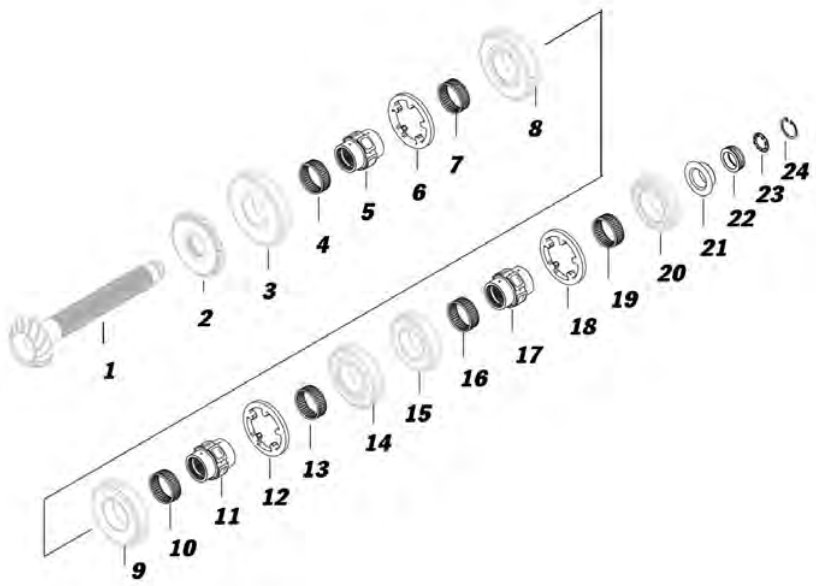

2.9.7.13

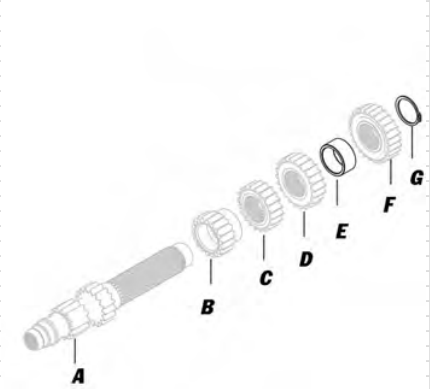

2.9.7.12

Push the idler gear 3rd gear (9) with idler gear bearing (10) on the guide sleeve (11) (claws toward 4th gear) and thread onto the pinion shaft (Figure 2.9.7.14). Please ensure in doing so that the oil holes of pinion shaft and guide sleeve are not directly on top of each other (extensive oil supply).

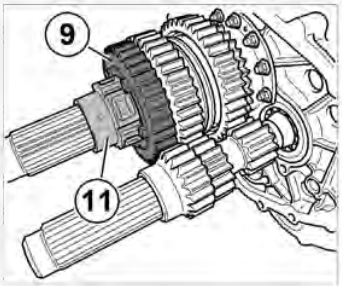

2.9.7.14

Push on selector sleeve 3rd/4th gear (12) with the label facing outward (Figure 2.9.7.15)

Push the idler gear 4th gear (14) with idler gear bearing (13) (claws in the direction of the 3rd gear) onto the guide sleeve (Figure 2.9.7.15)

Push on fixed gear 4th gear (C) (installation direction toward fixed gear: label of fixed gear (C) and label of idler gear (14) on the same side) (Figure 2.9.7.15)

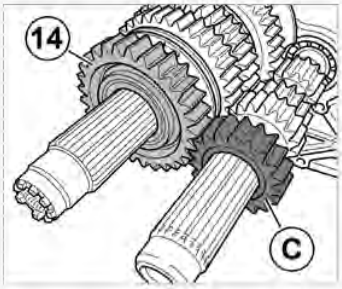

2.9.7.15

Downloaded from www.Manualslib.com manuals search engine

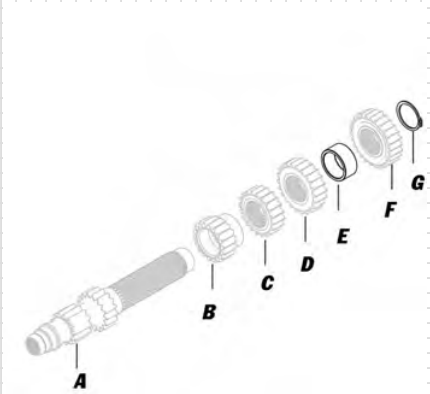

2.9.7.16

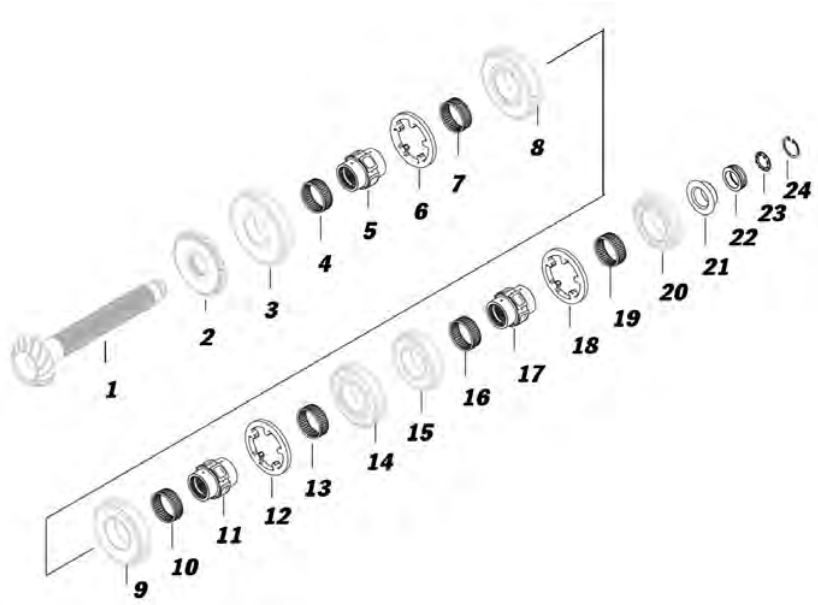

2.9.7.17

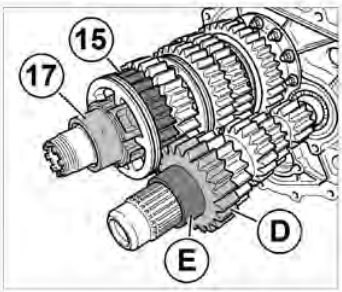

2.9.7.18

Push on guide sleeve 5th/6th gear (17) with idler gear 5th gear (15) and idler gear bearing (16) (claws pointing toward 6th gear) (Figure 2.9.7.18)

Push on fixed gear (D) gear 5 (installation direction: label of fixed gear (D) and idler gear (15) on the same side) (Figure 2.9.7.18). In doing so, please ensure that the oil holes of pinion shaft and guide sleeve are not placed directly on top of each other (extensive oil supply).

Put on the selector sleeve (18) (Figure 2.9.7.18)

Push the spacer sleeve (E) between 5th and 6th gear fixed gears Porsche spare part No.: 991.302.268.9B (Figure 2.9.7.18)

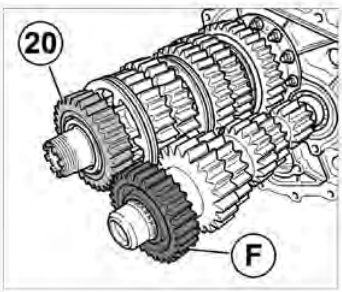

2.9.7.19

Push on idler gear 6th gear (20) with idler gear bearing (19) (claws pointing toward 5th gear) (Figure 2.9.7.19)

Push on fixed gear 6th gear (F) (installation direction: label of idler gear (20) and fixed gear (F) on the same side) (Figure 2.9.7.19)

Moisten the pinion shaft end with oil

Downloaded from www.Manualslib.com manuals search engine

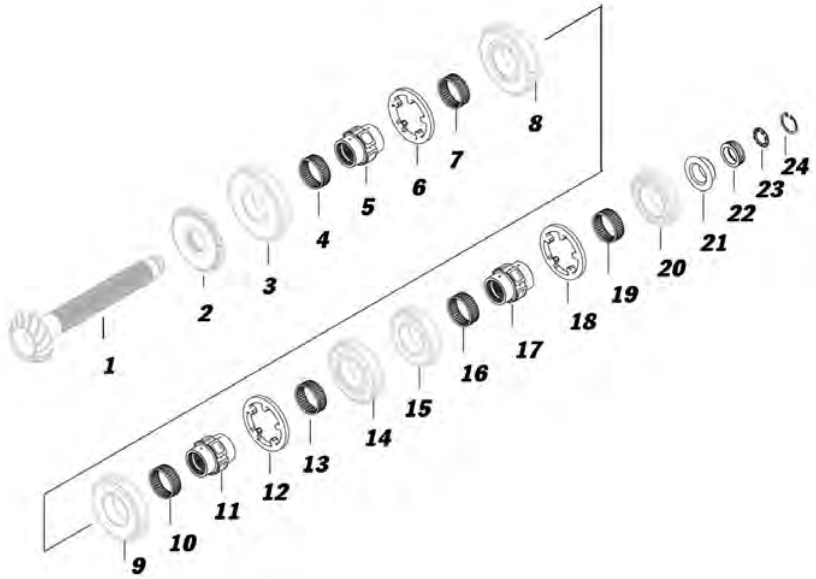

2.9.7.21

Secure locking ring (G) Porsche spare part No.: 900.041.039.01 of the drive shaft (Figure 2.9.7.22)

Put on the inner ring of the pinion shaft (21)

Put the nut (22) loosely on the pinion shaft

NOTE

Do not tighten the nut (22), final tightening is not done until step 2.9.20 Putting on the gear housing .

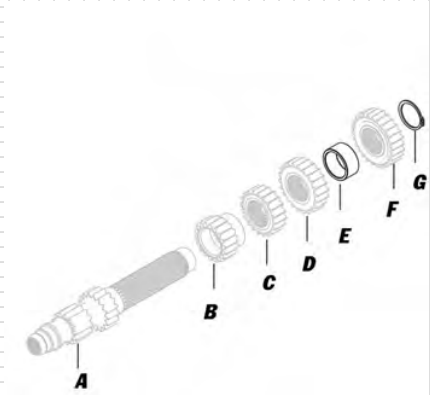

2.9.7.20

Downloaded from www.Manualslib.com manuals search engine

2.9.8 Vormontage Schaltwalze

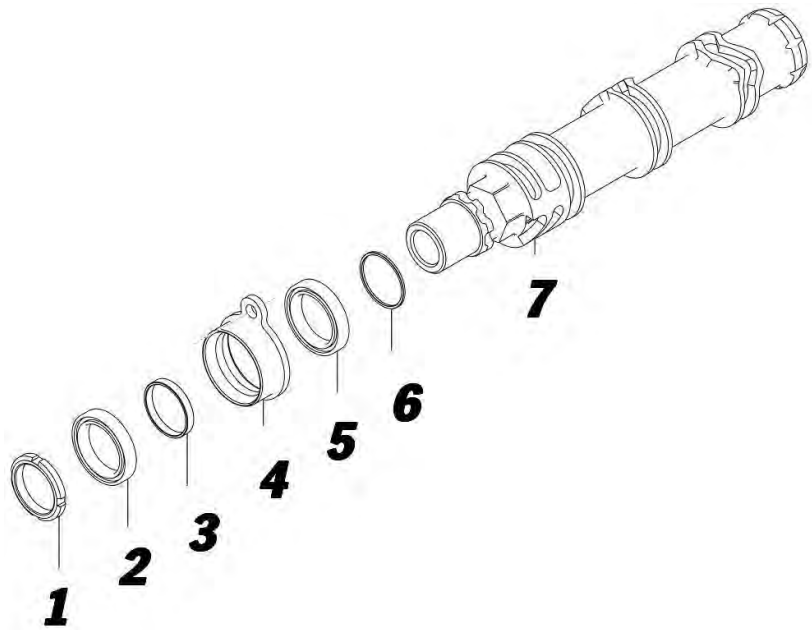

2.9.8.2

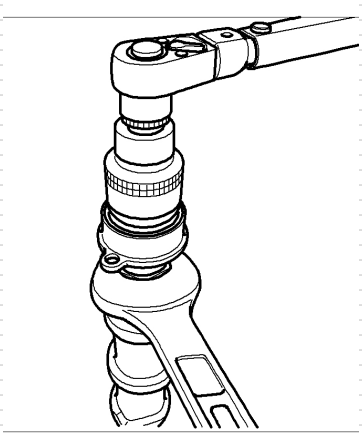

2.9.8.1

Put adjusting disk (6) Basic Porsche spare part No.: 991.303.297.09 (1.4 mm) on the shift drum (7)

Insert the grooved ball bearing (5)

Put on the bushing (4) (observe installation position)

Insert the gearshift shaft spacing washer (3)

Insert the grooved ball bearing (2)

Screw on the nut (1) (flattened side in the direction of the grooved ball bearing (2)) and tighten with 60 Nm (44.3 ft-lb) with tool no. 21 (Figure 2.9.8.2) Use Loctite 243.

Moisten the bushing (4) with oil

Insert the shift drum (7)

The bushing (4) and locking sleeve are not screwed onto the gearbox housing until chapter 2.9.11 Locking sleeve.

Downloaded from www.Manualslib.com manuals search engine

2.9.9 Oil pump assembly

Grease O rings (1) Porsche spare part No.: 999.707.146.40 and insert them in the oil pump housing

Remove the drive gear

Put on the oil pump and four nuts Porsche spare part No.: 900.817.001.02 and then tighten with 4 Nm (3 ft-lb) using a crisscross pattern. Check whether the shaft can be spun smoothly at that.

Final tightening of the oil pump with 10 Nm (7.4 ft-lb)

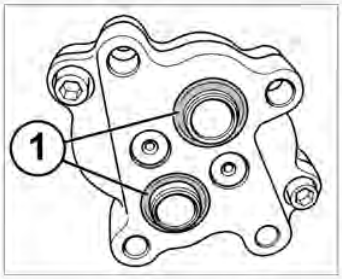

2.9.9.1

Put on the oil pump gearwheel; ensure that the feather key is inserted in the shaft here

NOTE

The label the gearwheel must point toward the oil pump because the oil pump gearwheel is not fully covered with idler gear 1st gear otherwise.

Insert locking ring (1) 10x1 (Figure 2.9.9.2)

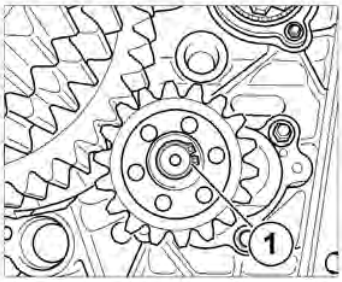

2.9.9.2

Downloaded from www.Manualslib.com manuals search engine

2.9.10 Reverse idler gear

The needle bearing sleeve (2) must be assembled first during reconstruction. Heat the reverse idler gear (3) to 130° (266 F) C for 30 minutes and press in the needle bearing sleeve with tool no. 32

WARNING Heat-resistant gloves must be worn for any work with hot items because of the risk of burning.

Secure the needle bearing sleeve (2) with the locking ring (1)

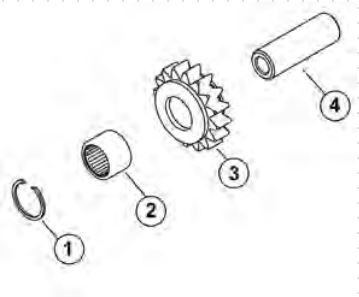

2.9.10.1

Insert reverse idler gear (3) with bearing spindle (4) and shift fork (Figure 2.9.9.2); the gearshift shaft must be in the neutral position to allow sufficient space for inserting

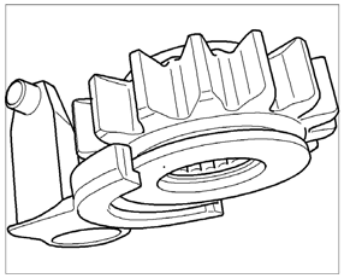

2.9.10.2

Downloaded from www.Manualslib.com manuals search engine

2.9.11 Locking sleeve

Abutment assembly:

Insert the lever (1) into bearing spindle abutment (4) Porsche spare part No.: 991.303.493.9A

Press in bushing (2) Porsche spare part No.: 991.303.497.9A

Insert the compression spring (3) between housing and lever

The bushing (2) must be flush with the housing (4)

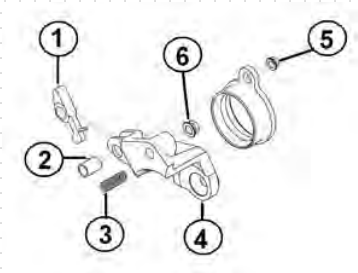

2.9.11.1

Tension the lever with a slot screwdriver and insert the locking sleeve in the gearbox housing

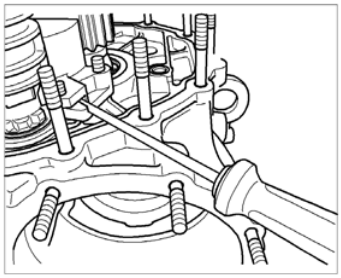
2.9.11.2

Put on Simmonds nuts (3) and tighten with 10 Nm (7.4 ft-lb)

Put on the screw (1) with adhesive Loctite 243 and tighten with 25 Nm (18.4 ft-lb)

Tighten Simmonds nut M8 (2) with 25 Nm (18.4 ft-lb)

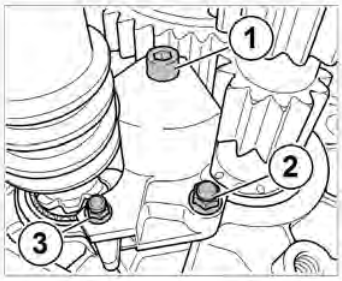

2.9.11.3

Downloaded from www.Manualslib.com manuals search engine

2.9.12 Shift rod and shift forks

Put the shift drum in the neutral position

Insert shift forks Porsche spare part No.: 991.303.111.9A

Grease two O rings (1) (11x2) Porsche spare part No.: 999.701.948.40 with Optimol Paste MP3 and put on the shift rod (1)

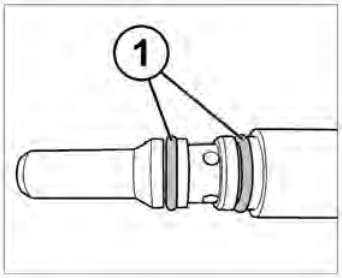

2.9.12.1

Lubricate the shift rod and put it in all the way to the stop

NOTE

Do not insert the upper O ring (arrow) of the shift rod until the final assembly. See 2.9.20

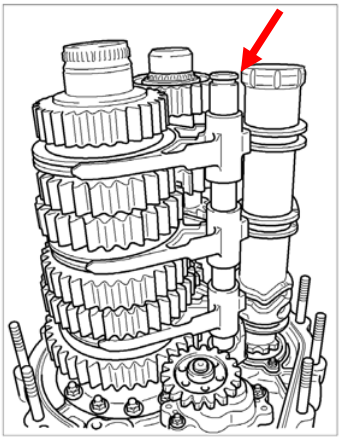

2.9.12.2

Downloaded from www.Manualslib.com manuals search engine

2.9.13 Suction tube assembly

Put greased suction tube (2) and O ring (1) Porsche spare part No.: 999.701.809.40 (15x2.5) on the gearbox housing

Put on nut (4) Porsche spare part No.: 900.817.001.02 and tighten with 10 Nm (7,4 ft-lb)

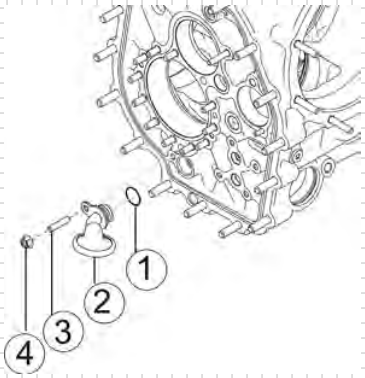

2.9.13.1

Oil filter

Insert the oil filter element (2) in the gear housing (without a specific installation direction), put on closure cap (3) with greased O ring (4) and secure with the locking ring (5)

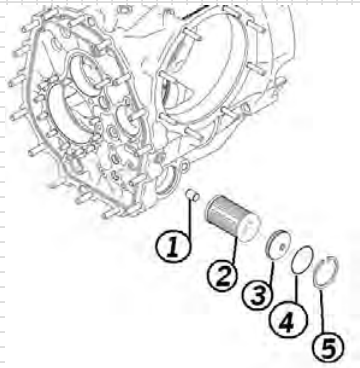

2.9.13.2

Downloaded from www.Manualslib.com manuals search engine

Inserting the connecting shaft

Press snap ring Porsche spare part No.: 900.906.039.00 onto the shaft

Center the snap ring (Figure 2.9.13.3) with grease to facilitate shaft assembly

Insert the connecting shaft in the drive shaft until it engages clearly

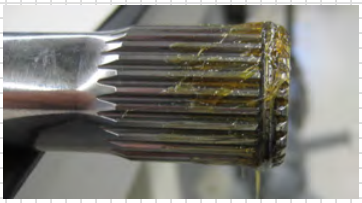

2.9.13.3

Put guide ring (connecting shaft) Porsche spare part No.: 991.301.119.9B on the bearing

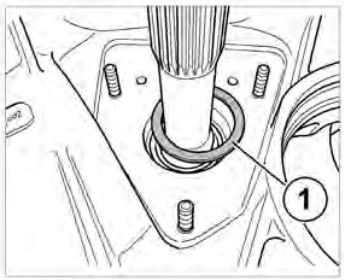

2.9.13.4

Grease shaft sealing ring (connecting shaft) (26x41x6) Porsche spare part No.: 997.302.351.9A with Optimol and drive in with tools no. 12 and 13. Tool no. 12 serves as a guide and prevents damage to the shaft sealing ring.

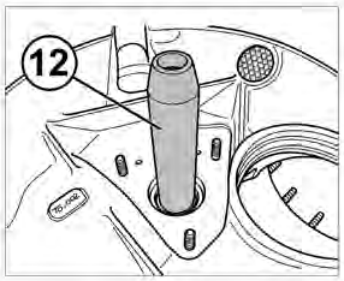

2.9.13.5

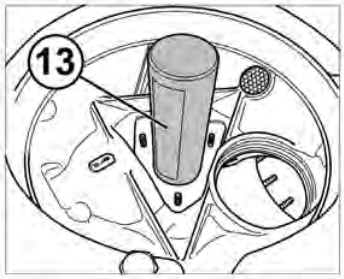

2.9.13.6

Downloaded from www.Manualslib.com manuals search engine

2.9.14 Central clutch operator assembly

Put in grease O rings (1)

Tighten the central clutch operator with 10 Nm (7.4 ft-lb) on the gearbox housing, use nut Porsche spare part No.: 900.817.001.02.

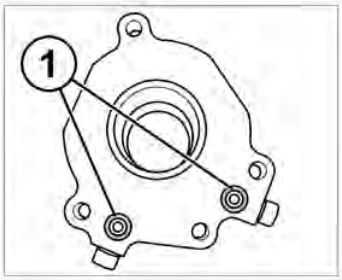

2.9.14.1

2.9.15 Cutted gear housing assembly

NOTE

The cutted gear housing is assembled to check the backlash of bevel gear to ring gear. The gear housing is fitted only after a check and possibly a correction.

Push on the cutted gear housing and fix in place with four nuts

Engage the 1st gear (by turning the shift drum)

Fix drive shaft in place with tool no. 19 (Figure 2.9.15.1)

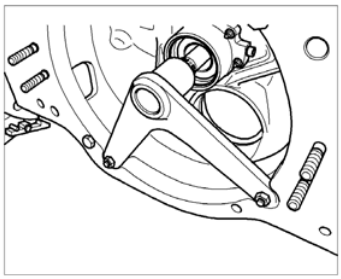

2.9.15.1

Pre-tighten the pinion shaft with 30 Nm (22 ft-lb)

Put on the angle disk and rotate the nut (drive shaft) 60° (Figure 2.9.15.2)

Loosen the nut and repeat the tightening process (30 Nm (22 ft-lb) + 60° angle of rotation)

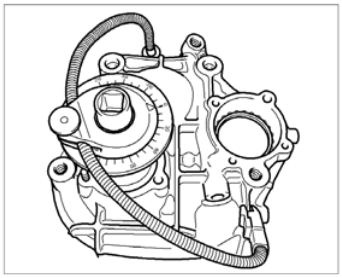

2.9.15.2

Downloaded from www.Manualslib.com manuals search engine

Check the gearshift clearance

Put the transmission in the installation position

The selector sleeves must be centered and move freely

Check the shifting of all gears while rotating drive shaft / pinion shaft

Check the clearance of the reverse gear shift fork

Check the backlash of the gearwheel pairings

Check the position of the gearwheel pairings

Check the free movement of the shift fork

The necessary consistent axial clearance of the shift forks in all gears can be achieved only with correct adjustment of the shift drum:

Engage any gear and pull the idler gear to the guide sleeve (1)

Press the sliding sleeve on the engaged gearwheel (2) and check the clearance (3) of the shift fork in the groove of the sliding sleeve

Carry out this check for all shift forks in all gears

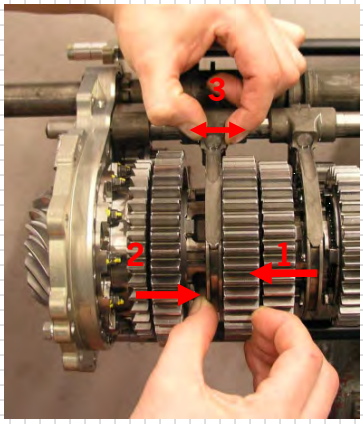

2.9.15.3

Downloaded from www.Manualslib.com manuals search engine

2.9.16 Determining cross shaft bearing adjusting disk Q1

The bearing unit in the cross shaft lid is installed using adjusting disk Q1 with compression. Determining adjusting disk Q1 requires measurement device Porsche spare part No.: 991.450.348.9A.

Measurement process

Insert measurement device Porsche spare part No.: 991.450.348.9A in the cross shaft lid. The touching surfaces of the components must be free from dirt.

The measurement device is clamped in with locking ring Porsche spare part No.: 900.042.049.01. The locking ring that is also ultimately used for installation must be used (Figure 2.9.16.1)

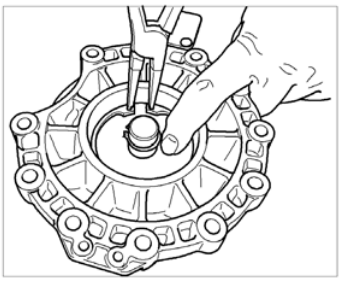

2.9.16.1

Aligning the depth caliper

Carry out the distance measurement (Figure 2.9.16.2) from stamp end to ring disk (1). Carry out three reference measurements (20.10 mm)

Measure the total length of the measurement device (2) (62.09 mm)

Measure the total length of both bearings (Figure 2.9.16.4) (39.95 mm)

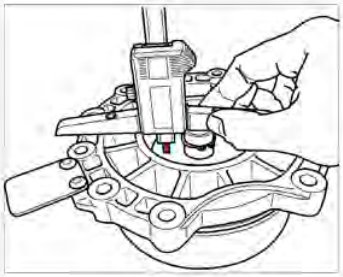

2.9.16.2

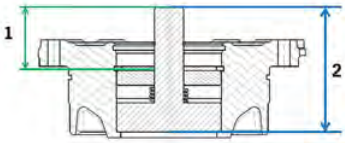

2.9.16.3

Calculating the Q1 measurement

Total length of the measurement device – total length of the bearings – distance measurement + compression (0.15 mm) = adjusting disk Q1

Example:

62.09 – 39.95 – 20.10 + 0.15 = 2.19

As a consequence, an adjusting disk with a thickness of 2.19 mm must be inserted.

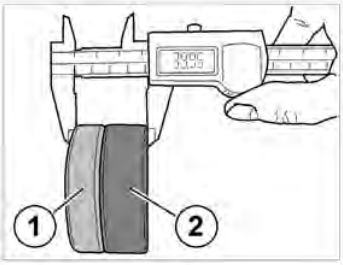

2.9.16.4

Downloaded from www.Manualslib.com manuals search engine

2.9.17 Cross shaft setup

Heat the cylinder roll bearing inner ring on a hot plate for 30 minutes at 130° C (266 F)

WARNING Heat-resistant gloves must be worn for any work with hot items because of the risk of burning.

Lubricate the shaft

Press the heated bearing (1) quickly onto the shaft. It must be possible to mount the bearing without applying great force.

Put the bushing on the shaft (2)

Put on the ring gear (3) (observe installation position)

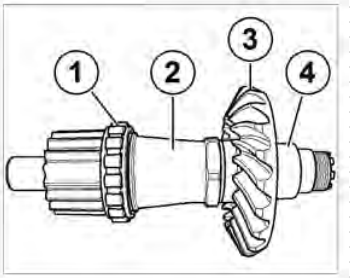

2.9.17.1

Downloaded from www.Manualslib.com manuals search engine

2.9.18 Cross shaft assembly

In the first step, the four-point bearing must be centered in the housing lid. Housing lid and four-point bearing are pre-assembled with an auxiliary shaft (tool no. 36) for that. The four-point bearing is fixed in place with the locking ring. The cross shaft is inserted in the housing lid in the second step.

Heat the housing lid (1) at 140 °C (284 F) for 30 minutes

WARNING Heat-resistant gloves must be worn for any work with hot items because of the risk of burning.

Insert the cylinder roll bearing (2) in the housing with tool no. 7 (bearing label must face toward the top)

Clamp tool no. 36 (auxiliary shaft) into the vice

Put the housing lid (1) on auxiliary shaft no. 36

Insert the bottom inner ring of the four-point bearing (3) in the housing lid

Insert the four-point bearing (3) (label toward the top)

Insert the top ring of the four-point bearing (3)

Lubricate and put on the nut (1)

Pre-tighten the shaft by tightening the nut (1)

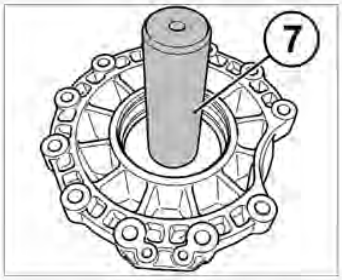

2.9.18.1

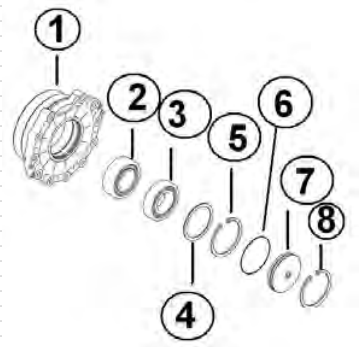

2.9.18.2

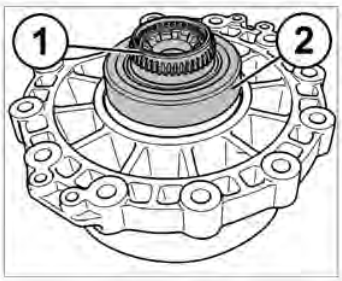

2.9.18.3

Downloaded from www.Manualslib.com manuals search engine

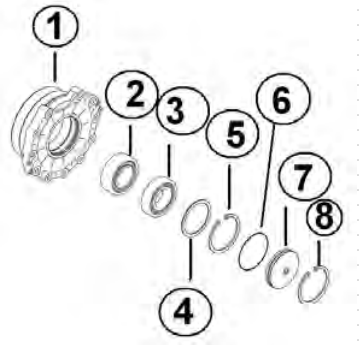

2.9.18.4

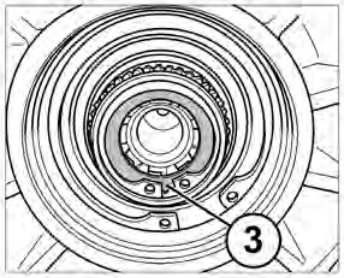

2.9.18.5

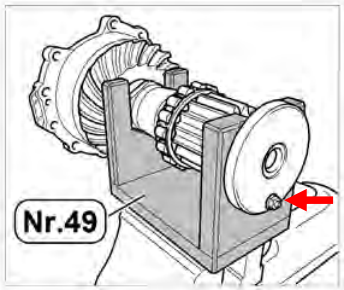

2.9.18.6

Insert the calculated adjusting disk Q1 (4)

Insert the locking ring (5). The oil hole must stay open (Figure pos.)

Drive in ring with copper drift (four-point bearing is fixed in place)

Use compressed air to blow out any chippings

Loosen the nut and take the housing lid of the centering tool (auxiliary shaft)

Lubricate the inner bearing ring of the cylinder roll bearing

Put the housing lid on the cross shaft

Loosely put on the nut

Clamp tool no. 49 into the vice

Insert shaft with lid in tool no. 49 (Figure 2.9.18.6) and fix in place with the nut (arrow)

Tighten the nut for the cross shaft, 50 Nm (36.9 ft-lb) + 60°, loosen and tighten finally with 50 Nm (36.9 ft-lb) +60°

Downloaded from www.Manualslib.com manuals search engine

Check the ease of movement of the bearing

Attach locking ring (3) Porsche spare part No.: 991.302.793.9A for the nut

Attach locking ring Porsche spare part No.: 999.042.313.01

Place the greased O ring (130x2.5) on the lid, Porsche spare part No.: 999.701.580.40

Visually check the gearbox housing

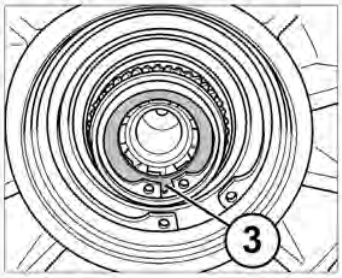

2.9.18.7

Put on the adjusting disk (basic 1.4) P2

Insert the shaft with the lid (rotate shaft slightly to prevent two teeth of ring gear and bevel gear from touching directly)

Tighten the lid with every second nut using a crisscross pattern (25 Nm (18.4 ft-lb))

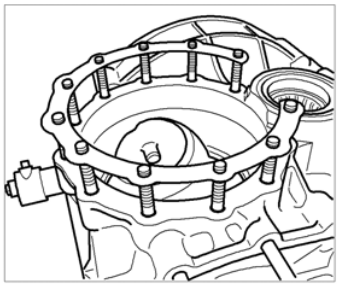

2.9.18.8

Downloaded from www.Manualslib.com manuals search engine

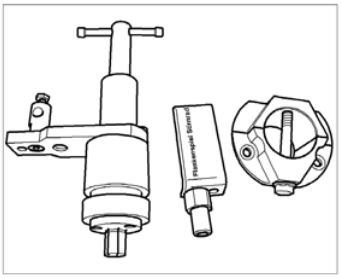

2.9.18.9

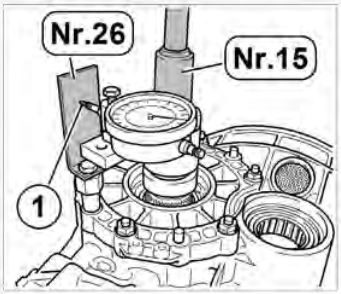

2.9.18.10

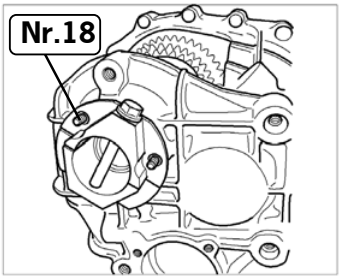

2.9.18.11

Checking the backlash of the angle drive

Clamp tool no. 15 onto the shaft

Screw tool no. 26 onto the housing

Attach the probe indicator; the needle (1) must touch tool no. 26 pre-tightened

Block the pinion shaft in the position „drive“ with tool no. 18, fix the tool well in place on the cutted gear housing to allow a precise measurement.

Rotate the cross shaft from stop to stop

Adjustment value: 0.15 to 0.19 mm

Loosen tools and rotate the cross shaft 90°; repeat the measurement process three more times..

NOTE

If the clearance is too big, a thinner adjusting disk P2 must be inserted. If the clearance is too little, use a thicker adjusting disk.

Block the pinion shaft in the position „coast“ with tool no. 18, fix the tool well in place on the cutted gear housing to allow a precise measurement.

Rotate the cross shaft from stop to stop

Adjustment value: 0.10 to 0.14 mm

Loosen tools and rotate the cross shaft 90°; repeat the measurement process three more times.

NOTE

If the clearance is too big, a thinner adjusting disk P2 must be inserted. If the clearance is too little, use a thicker adjusting disk.

Downloaded from www.Manualslib.com manuals search engine

2.9.19 Differential setup

The differential can be replaced even if the transmission is filled with oil. The oil level should still always be checked after working on the transmission. Friction disks, bevel gears, bevel pinions, axial bearings, and ramps must be lubricated well before the assembly. The measure of the assembly of pressure plates (external geared), clutch disks (internal geared), thrust rings, thrust pieces and cross pins has to be within a specified dimension. The actual dimension has to be measured during reassembly and must be corrected to the specified dimension by using a variety of pressure plates in different sizes.

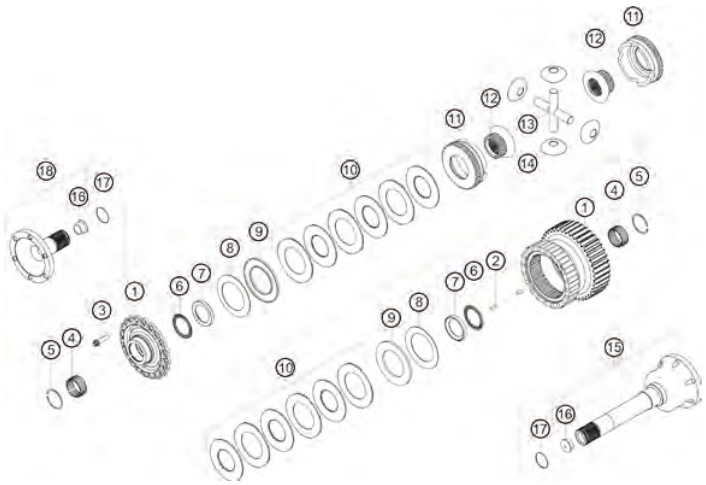

2.9.19.1

Grease the axial needle bearing (6), mount into the ring (7) and assemble into the differential housing (round side of the bearing is pointing to the outside).

Insert disk spring (8) and thrust ring (9) (observe installation position) with the thrust ring label towards the top (Figure 2.9.19.2)

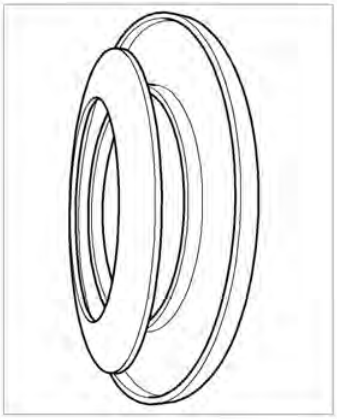

2.9.19.2

Disk package (10):

NOTE

The teeth of the disks must be centered on the housing mark (zero) (3).

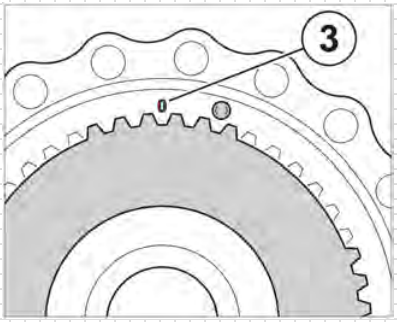

2.9.19.3

Insert outer disk 1

Insert inner disk 1

Insert outer disk 2

Insert inner disk 2

Insert outer disk 3

Insert inner disk 3

Downloaded from www.Manualslib.com manuals search engine

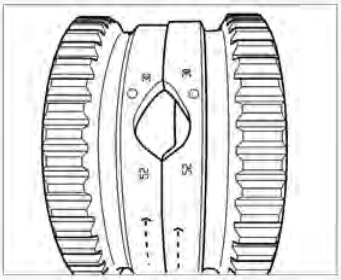

2.9.19.5

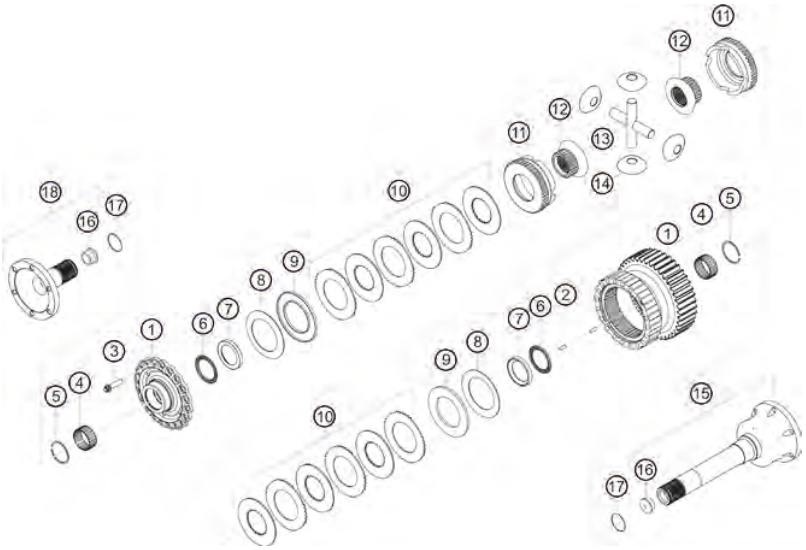

2.9.19.4

Insert the pressure piece (11); keep in mind rotational direction and 0 mark (Figure 2.9.19.4)

Insert bevel gear (12)

Insert cross pin (13) with bevel pinion (14)

Insert bevel gear (12)

Insert pressure piece (11), keep in mind rotational direction / mark!

Disk package (10):

Insert inner disk 3

Insert outer disk 3

Insert inner disk 2

Insert outer disk 2

Insert inner disk 1

Insert outer disk 1

Insert pressure plate (9) + disk spring (8) (observe installation position)

Insert ring (7)

Grease the axial needle bearing (6), mount into the ring and assemble into the differential housing (round side of the bearing is pointing to the outside).

Downloaded from www.Manualslib.com manuals search engine

Measure the friction package

Measurement of the differential housing depth from the bottom surface to the top face of the gearing (A) - measurement of the step within the diff cap (B) = C + tolerance (0.1 - 0.3 mm)

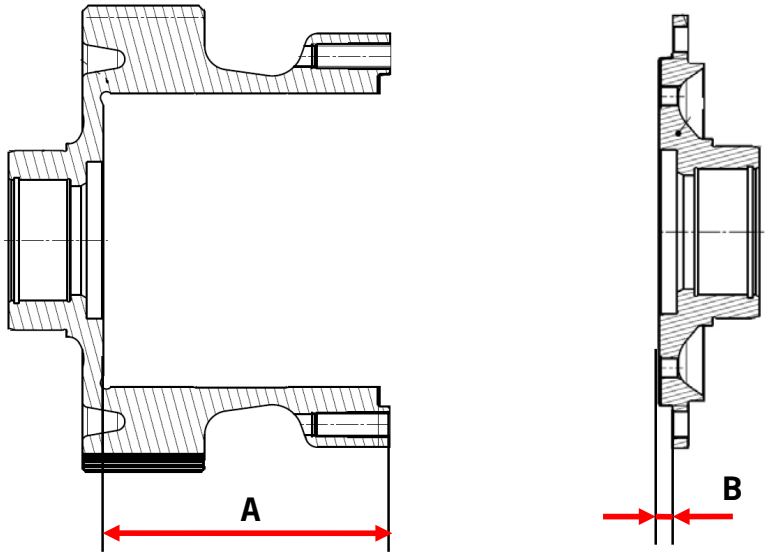

2.9.19.6

Measurement without springs!

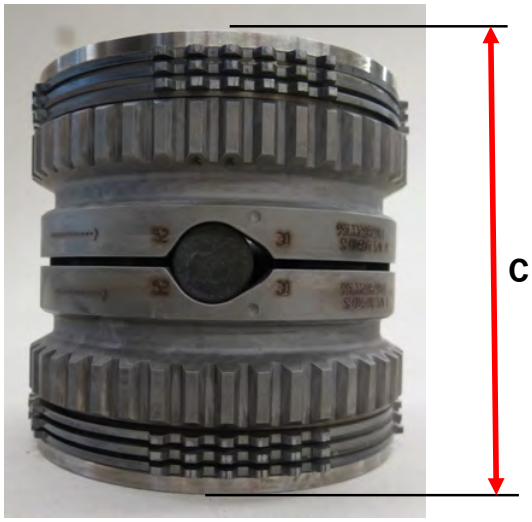

2.9.19.7

The measurement of the friction package has to be 0.1- 0.3 mm less than the measurement (A-B). In case the measurement of the friction package is not within the tolerance it must be corrected by reassembling with pressure plates of different thickness.

Measurement:

A – B = C + (0,1- 0,3 mm)

Downloaded from www.Manualslib.com manuals search engine

Symmetry of the cross pin

During the assembly of the friction package please note, that the cross pin has to be in symmetric position of the friction package as otherwise the axle flanges might be pushed out of their latching position within the thrust pieces. Therefore the layered arrangement of the friction package has to be measured from the differential housing face / the differential housing cap face to the cross pin (marked red) and the difference between the sides may not exceed 0.2 mm. In case the difference is bigger, the friction package must be reassembled with a different arrangement of the clutch disks and pressure plates (thickness).

D = E ± 0.2 mm

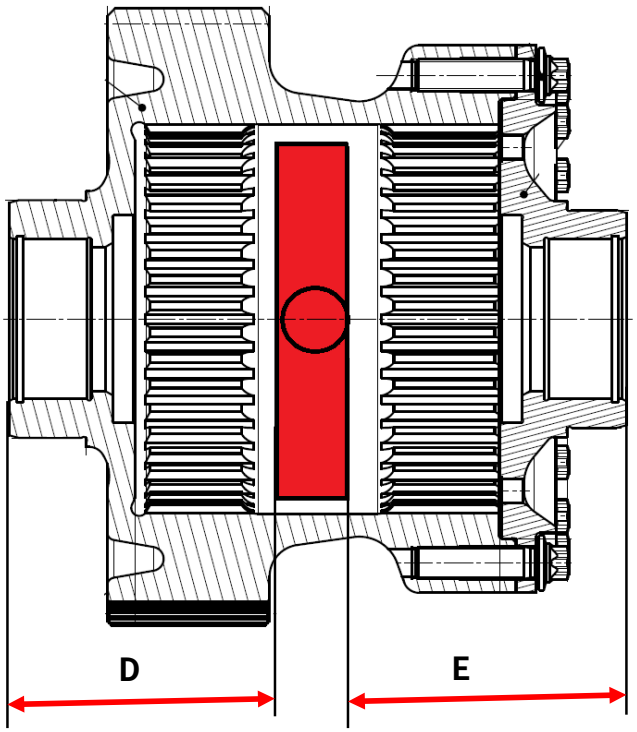

2.9.19.8

Downloaded from www.Manualslib.com manuals search engine

Check the differential lid / differential housing pairing!

Lubricate the edge and put on the lid (2)

The inner threads must be free from residue of the screw locking device agent. All screws (1) and threads must be degreased.

Bolting differential lid (2):

- Tighten lid with 4 assembly bolts with 15 Nm Sequence 1, 11, 6, 16

Check the basic locking action

Clamp tool no. 52 into the vice (Figure 2.9.19.10)

Put on tool no. 53

Check the locking action with drag torque wrench no. 59

- Tighten 16 bolts with torque 15Nm+70° (apply Loctite 262 on thread) Sequence 2, 12, 7, 17, 3, 13, 8, 18, 4, 14, 9, 19, 5, 15, 10, 20
- Remove assembly bolts
- Tighten 4 bolts with torque 15Nm+70° (apply Loctite 262 on thread) Sequence 1, 11, 6, 16

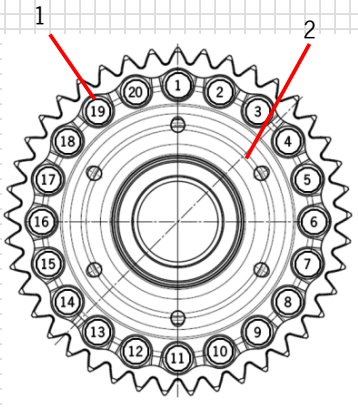

2.9.19.9

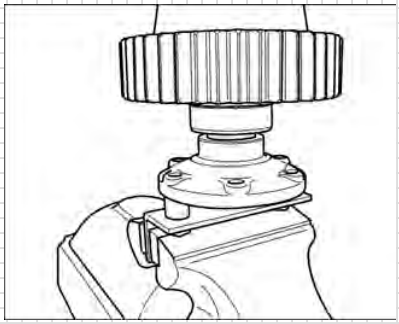
2.9.19.10

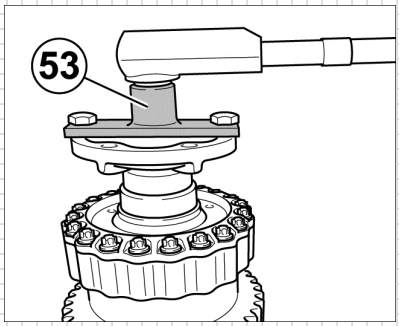

2.9.19.11

Downloaded from www.Manualslib.com manuals search engine

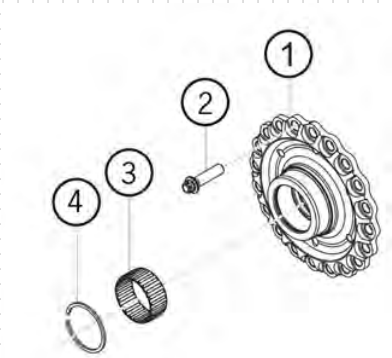

2.9.19.12

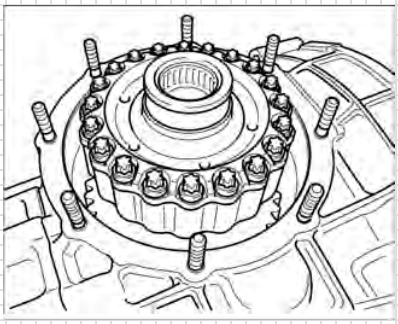

2.9.19.13

Differential installation

Insert needle cage (3) Porsche spare part No.:	999.201.128.00
Dimensions:	35x40x17
Put on snap ring (4) Porsche spare part No.:	999.332.997.9A

Insert the differential in the gearbox housing (Figure 2.9.19.13)

Put on differential lid with greased O ring and tighten with 25 Nm (18.4 ft-lb)

Downloaded from www.Manualslib.com manuals search engine

Checking the backlash of cross shaft / differential

The backlash of cross shaft / differential cannot be adjusted due to the design. It must still be checked though whether the clearance is within the specified measurement value.

Attach tool no. 16 on the lateral differential lid

Attach the probe indicator

Attach stop no. 26 on the differential lid catch (Figure 2.9.19.14)

Block the cross shaft with tool no. 15 (Figure 2.9.19.15)

Check the measured value by rotating the differential (measured value: 0.10 – 0.20 mm)

Check the test device on four points at an offset of 90°

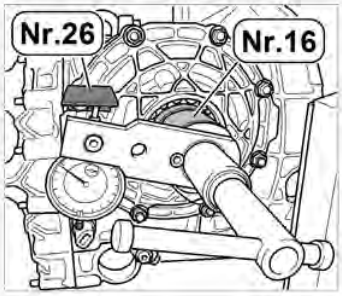

2.9.19.14

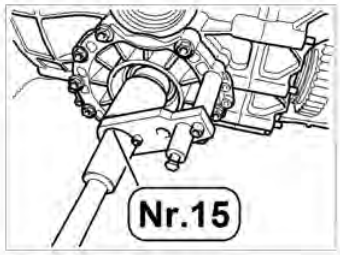

2.9.19.15

Put the needle cage into the differential (Figure 2.9.19.16)

Insert the snap ring

Insert the shaft sealing ring into the differential lid

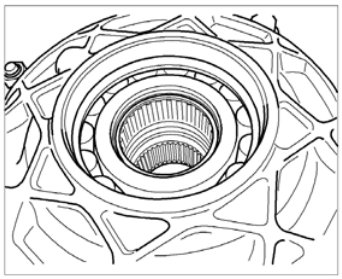

2.9.19.16

Downloaded from www.Manualslib.com manuals search engine

2.9.20 Gear housing assembly

Insert the greased top O ring of the shift rod into the groove (Figure 2.9.20.1)

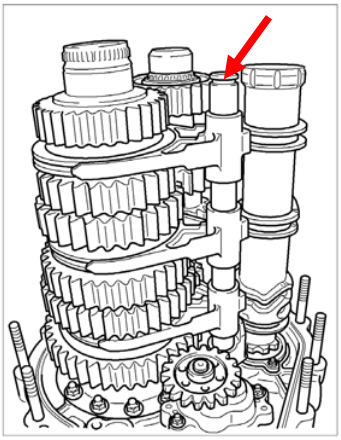

2.9.20.1

Grease the O ring (1) and insert it in the gearbox housing (Figure 2.9.20.2)

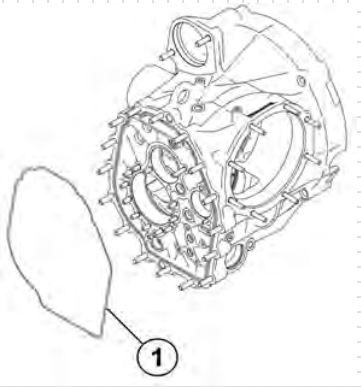

2.9.20.2

The cutted gear housing can be replaced with the gear housing after all settings have been made. Drive shaft and pinion shaft are already mounted in this section.

Put on the housing and tighten evenly (25 Nm (18.4 ft-lb))

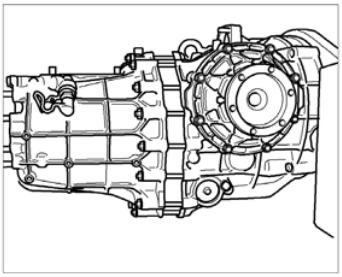

2.9.20.3

Downloaded from www.Manualslib.com manuals search engine

Tighten the pinion shaft nut with 30 Nm (22 ft-lb)+60°, loosen and then tighten again with 30 Nm (22 ft-lb) +60° (Figure 2.9.20.4)

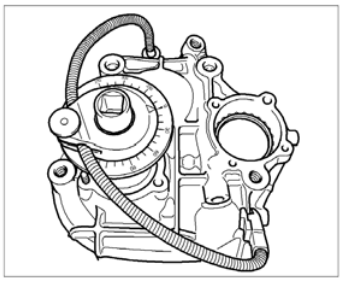

2.9.20.4

Put on the pinion shaft lid (23) with greased sealing ring (24) and tighten the nuts (25) with 10 Nm (7.4 ft-lb) (Figure 2.9.20.5)

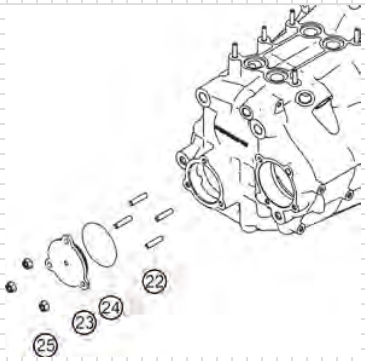

2.9.20.5

Put on the cross shaft lid cover with greased O ring and fix in place with a locking ring (Figure 2.9.20.6)

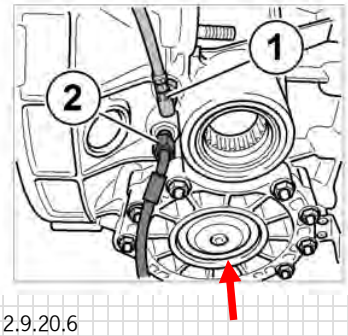

2.9.20.6

Downloaded from www.Manualslib.com manuals search engine

Put on the transmission shell assembly opening cover (arrow) with greased O ring and fix in place with a locking ring (Figure 2.9.20.6)

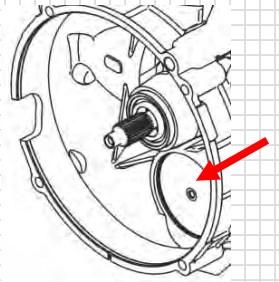

2.9.20.7

Put on the shift control (3) and tighten with 10 Nm (7.4 ft-lb)

Put the shift control potentiometer (2) on the shift control

Calibrate the shift control potentiometer (6th gear, 4.5 V)

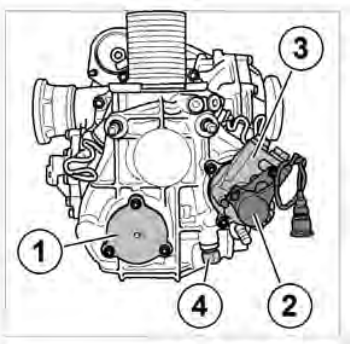

2.9.20.8

Gearbox to gearbox bracket 65 Nm (48 ft-ib)

Shift cylinder to gearbox bracket and shift control tighten with 12 Nm (8,9 ft-lb)

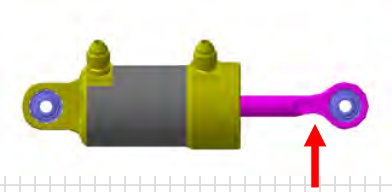

2.9.20.9

NOTE

The installation position of the shift cylinder (see figure 2.9.20.9). The groove must point to the rolex shaft.

Mount the hydraulic lines of the central clutch operator

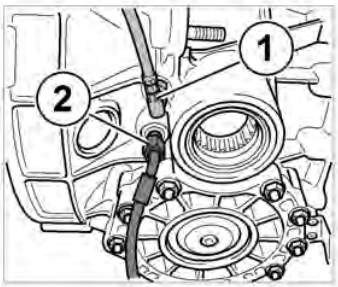

2.9.20.10

Downloaded from www.Manualslib.com manuals search engine

Insert the greased sealing rings (2) of the oil / water heat exchanger, put on reinforcement plate (3) and heat exchanger (1)

Tighten the heat exchanger with 10 Nm (7.4 ft-lb)

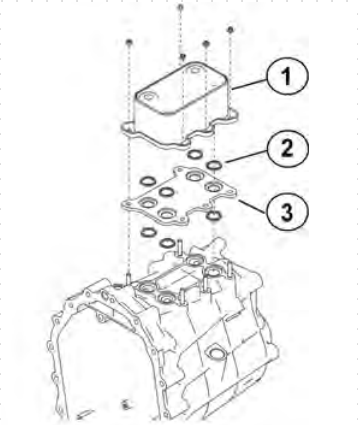

2.9.20.11

Insert the oil injection tube (2) for the pinion shaft into the gearbox housing with greased sealing ring (1) and tighten the nut (4) with 10 Nm (7.4 ft-lb) tightening torque and Loctite 2701

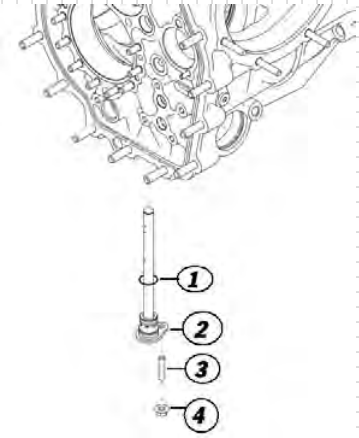

2.9.20.12

Fill transmission with 3 liters (3.17 qts) of oil (see chapter 2.3.5 Oil circuit)

Insert drive shaft flanges (arrow)

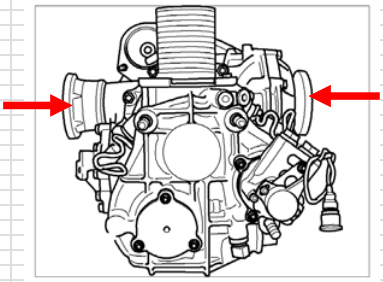

2.9.20.13

Downloaded from www.Manualslib.com manuals search engine

2.10 Overview gearbox settings

Pinion shaft

Preload 4-point-bearing

Set valve: 0.03 – 0.05 mm (Figure 2.9.4.2) via adjustment disk H1

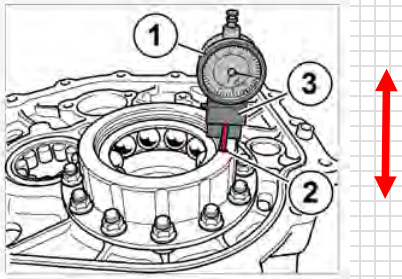

2.9.4.2

Axial backlash 4-point-bearing

Set valve: 0.02 – 0.05 mm via adjustment disk H2

Pinion shaft position

Offset: 0.00 - 0.02 mm via adjustment disk P1

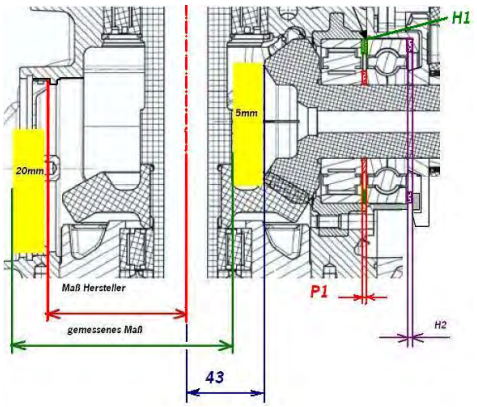

Cross shaft

Preload 4-point-bearing

Set valve (Pressung): 0.15mm via adjustment disk Q1 (Figure 2.9.20.13)

2.9.20.13

Backlash pinion/crownwheel “drive”

Set valve: 0.15 – 0.19 mm via adjustment disk P2 (Figure 2.9.18.9)

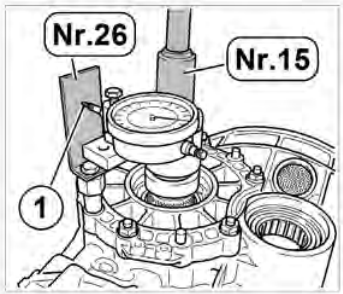

2.9.18.9

Backlash pinion/crownwheel “coast”

Set value: 0.10 – 0.14 mm (Figure 2.9.18.9)

Differential

Backlash shift cross shaft/diff

Set valve: 0.10 – 0.20 mm (not adjustable) (Figure 2.9.19.11)

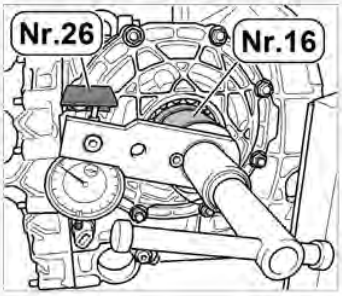

2.9.19.11

Downloaded from www.Manualslib.com manuals search engine

3 Chassis

3.1 General

The front and rear axles have been overhauled to suit the requirements of competition and to allow for easy and accurate setting of camber, toe, and vehicle height. Compared to the previous model, the shock absorber and spring characteristics have once more been optimized. This adjustment results in a more neutral handling.

The front axle design is a MacPherson strut-type axle with aluminum transverse control arms. The rear axle is a multi-link axle.

3.1.1

Based on the previous model, the following major development objectives were set and implemented in the chassis for the new 911 GT3 Cup (991):

- Extension of the wheel base by 100 mm (3.94 inches)
- Front and rear axle redesign with optimized kinematics
- All joints in Uniball design for maximum system stiffness
- Brake system improvement
- Increase in axle stiffness
- Improved brake balance setting

Downloaded from www.Manualslib.com manuals search engine

3.1.1 Wheel bearing

The wheel bearing is attached separately on the wheel mount using four bolts. Compared to the pressed-in variant, this advanced bearing integration has the advantage that the bearing can be replaced faster and easier on the vehicle. Moreover, the wheel bearing is insensitive to temperature changes.

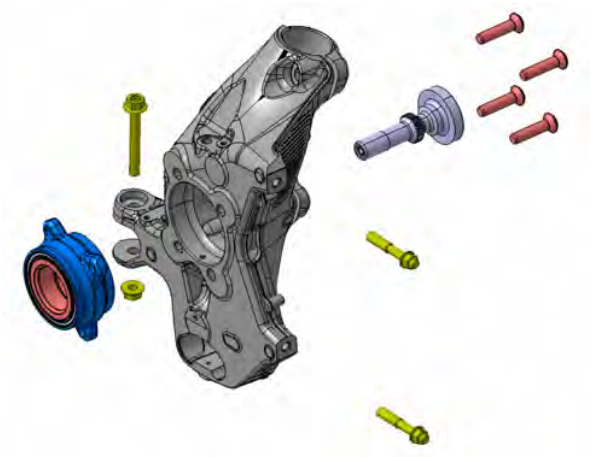

3.1.1.1

Downloaded from www.Manualslib.com manuals search engine

3.1.2 Wheel hub

The wheel hub is a reinforced racing wheel hub with central lock. The central lock nut is protected by a locking mechanism integrated in the hub to prevent it from accidental loosening. The correct functioning of the retaining keys has to be checked regularly.

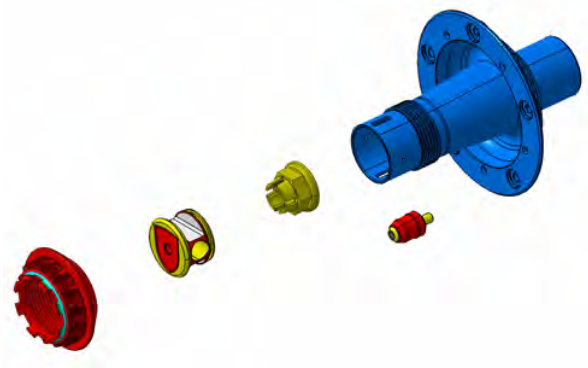

3.1.2.1

Downloaded from www.Manualslib.com manuals search engine

3.1.3 Wheel nut

The aluminum wheel nuts can be distinguished as follows:

Right vehicle side = left-hand thread, blue color

Left vehicle side = right-hand thread, red color

Porsche Motorsport recommends also replacing the wheel nuts during a long-distance race (after approx. 6 hours running time) to verify and regenerate them. Clean the threads, judge them by visual inspection and re-grease them with Optimol Paste TA Porsche spare part no.: 000.043.020.00. Also grease the contact surface nut-rim.

Proceed as follows in order to prevent the wheel nuts from settling:

Tighten the new part 3 to 4 times using an impact wrench (500 – 520 Nm) (369-384 ft-lb), then loosen and re-grease it.

Downloaded from www.Manualslib.com manuals search engine

3.1.4 Locking piece

The locking pieces are used as wheel nut locking mechanism and to prevent the wheel from loosening.

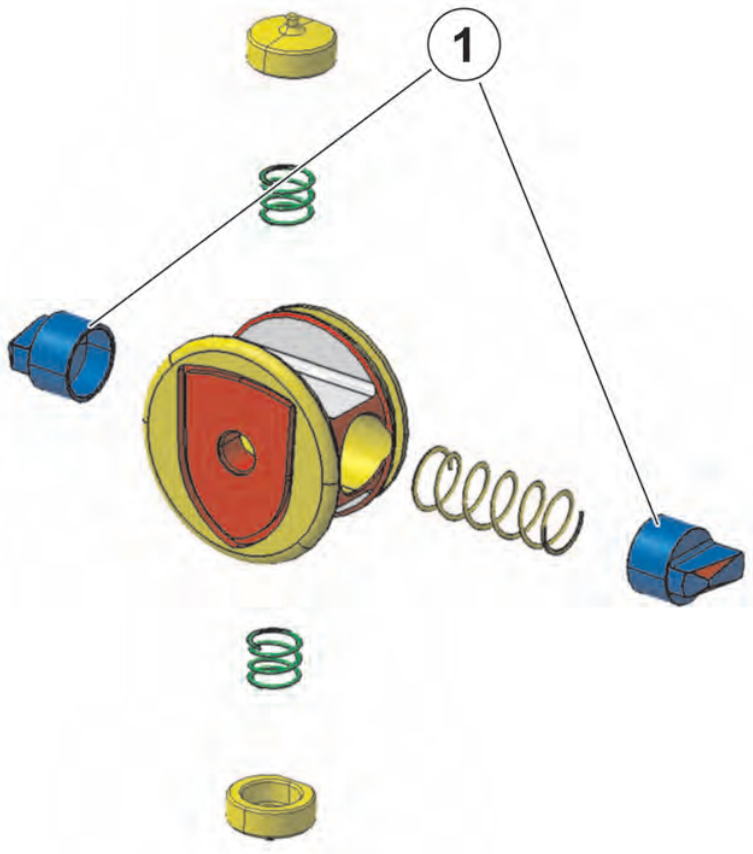

3.1.4.1

1 Locking Piece

Downloaded from www.Manualslib.com manuals search engine

3.2 Front axle

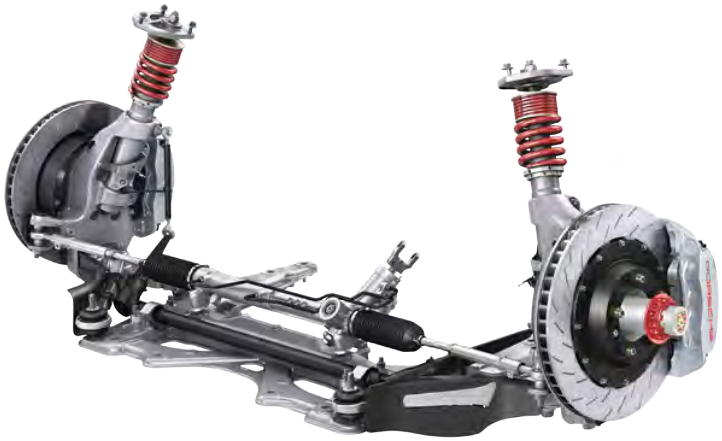

3.2.1

A MacPherson strut with gas pressure shock absorbers is installed on the front axle and attached to the body by a Uniball joint in the strut bearing. A blade-type anti-roll bar that is adjustable on both ends has a controlled impact on the vehicle's rolling behavior. The double shear connection of the control arm and tie rod to the wheel mount as well as a stiffer shock absorber clamp increase the wheel mount's overall stiffness. The use of high performance joint bearings in all control arms minimizes play, and unwanted elastokinematic effects are greatly reduced.

The spring assembly, arranged concentrically on the MacPherson strut, consists of a main spring and a helper spring. The vehicle height can be adjusted continuously using the thread adjustment of the lower spring seat.

Downloaded from www.Manualslib.com manuals search engine

3.2.1 Front axle cross member

The cross member made of cast aluminum is used as connecting element between the transverse control arms and the body. Transverse control arm, anti-roll bar bearing, longitudinal control arm and steering unit are attached to the cross member.

3.2.1.1

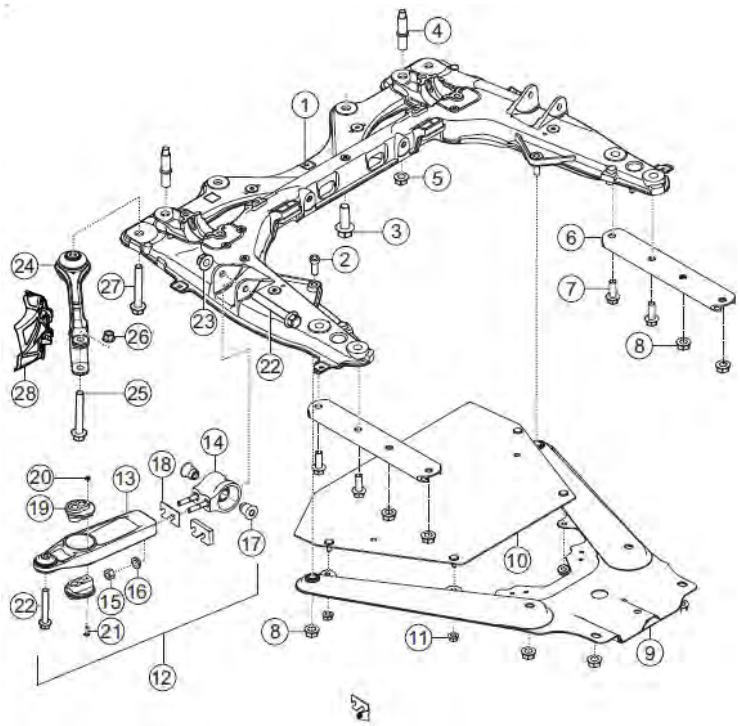

3.2.1.2

List of tightening torques for front axle cross member

Item	Dimensions	Tightening torque in Nm/Comments
3	M12 x 1,5 x 50	120 Nm (88.5 ft-lb)
5	M12 x 1,5	120 Nm (88.5 ft-lb)
7	M12 x 1,5 x 60	120 Nm (88.5 ft-lb)
8	M10	65 Nm (48 ft-lb)
11	M6	10 Nm (7.4 ft-lb)
14		Stud 10 Nm (7.4 ft-lb) + Loctite 276
15	M8	25 ± 2 Nm (18.4 ± 1.5 ft-lb)
20	M5	5 Nm (3.7 ft-lb)
22	M12 x 1,5 x 90	120 Nm (88,5 ft-lb)
23	M12 x 1,5	120 Nm (88.5 ft-lb)
26	M14 x 1,5	160 Nm (118 ft-lb)
27	M14 x 1,5 x 105	Initial installation: 140 Nm (103 ft-lb) then180 ° loosening then 140 Nm. Otherwise 140 Nm

Downloaded from www.Manualslib.com manuals search engine

3.2.2 Front axle transverse control arm

The two-piece forged aluminum transverse control arm of the front axle allows for continuous camber adjustment.

Camber adjustment can be done in two different places: The rough initial adjustment is achieved with different spacers in the transverse control arm. For fine adjustment of the camber, slots in the front axle dome allow displacement of the strut mount.

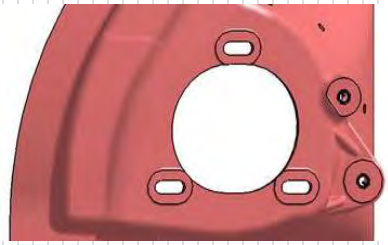
3.2.2.1

The following adjustment washers can be purchased at Porsche Motorsport:

0.30 mm	996.341.543.96	2.00 mm	996.341.543.91
0.60 mm	996.341.543.97	7.00 mm	996.341.543.93
0,80 mm	996.341.543.98	10.0 mm	996.341.543.95
1.00 mm	996.341.543.90		

The maximum permitted spacer width that can be achieved by combining individual spacers (2) is 18 mm on the front axle. The transverse control arm must be installed in such a way that the screw connection of the camber adjustment washer is accessible from below. The longitudinal control arm has to be screwed to the inner hole of the strut bearing. The mounting screw of the transverse control arm and longitudinal control arm has to be inserted from above (1).

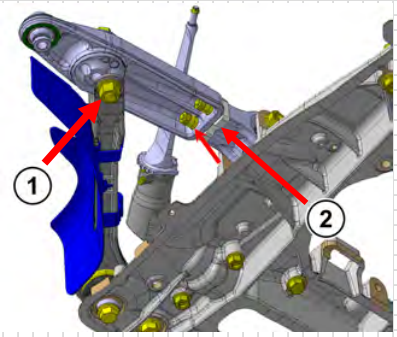

3.2.2.2

NOTE

When inserting the spacers it´s important to use as less spacers as possible to get to the desired length. This prevents potential clamping force loss caused by settling process.

Thinner shims have to be mounted on the inside of the wishbone (side of the fixed bearing). This will avoid a clamping of the shims on the tapered area of the stud (see red colour, picture 3.2.2.3). The picture shows a section of the left wishbone assembly.

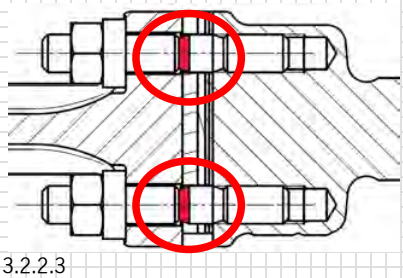
3.2.2.3

Downloaded from www.Manualslib.com manuals search engine

NOTE

When working on the suspension, care must be taken to see that the wheel mount is not inclined when abutting the transverse control arm joint, as this might damage the joint.

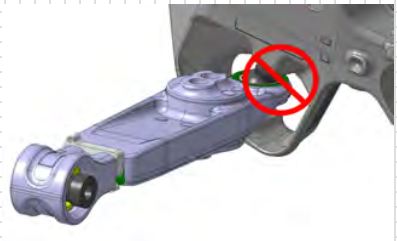

3.2.2.4

NOTE

Adjust the strut mount inwardly in order to ensure a sufficient screwing depth of the tie rod threads for high camber values (>4.5°).

The maximum tie rod length is 430 mm.

3.2.2.5

3.2.3 Longitudinal control arm

The longitudinal control arms are stiffness-optimized forged control arms.

Downloaded from www.Manualslib.com manuals search engine

3.2.4 Front axle wheel mount

The aluminum wheel mount is still made of torsion-proof and bending-resistant hollow casting. To optimize the cooling air supply to the brake, the geometry in the area of the “steering arms” has been significantly improved.

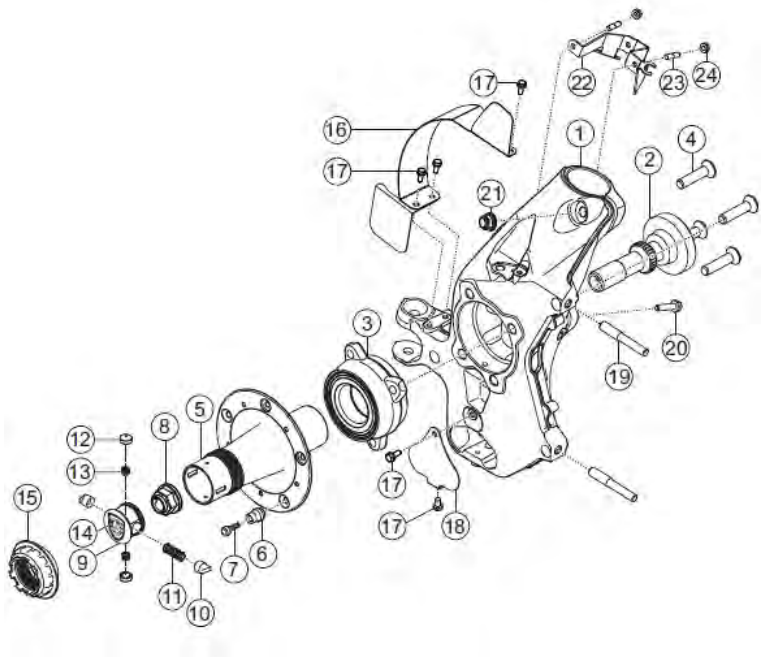

3.2.4.1

List of tightening torques front axle wheel mount

Item	Dimensions	Tightening torque in Nm/Comments
2		lubricate winding with Optimol HT-paste
4	M12 x 1,25 x 45	170 Nm (125 ft-lb)
7	M8 x 32	35 Nm (26 ft-lb)
8	M22 x 1,5	470 Nm (347 ft-lb) then free (ca.90°) then 470 Nm (347 ft-lb)
15		500-525 Nm (369/387 ft-lb) (lubricate with Alupaste)
17	M6 x 16	10 Nm (7 ft-lb)
19	M12 x 1,5 + M10 x 1,5	After demounting replace, microencapsulation! 21 Nm (15 ft-lb)
20	M8 x 35	23 Nm (17 ft-lb)
21	M12	85 Nm (63 ft-lb)
24	M6	10 Nm (7 ft_lb)

The air blade of the side radiator exhaust air duct as well as the brake air deflectors fitted on the longitudinal control arm ensure that the radiator air is transported almost without any flow losses to the brake disk.

Downloaded from www.Manualslib.com manuals search engine

3.2.5 Front axle shock absorber

The new lightweight strut consists of a high performance gas pressure racing shock absorber in two-tube design. Compared to the previous model, it is provided with an additional bottom valve. A coil spring assembly consisting of a main and a helper spring is arranged concentrically on the shock absorber. For stroke limitation and protection of the shock absorber, the latter is equipped with an integrated bump stop.

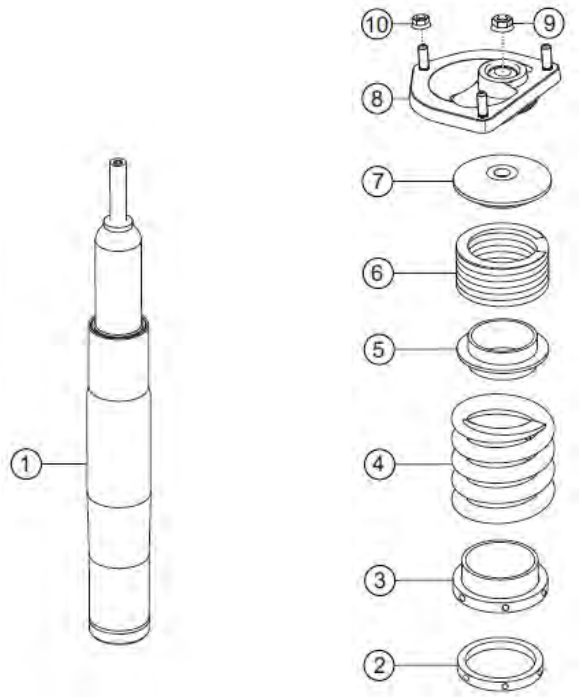

3.2.5.1

List of tightening torques for front axle shock absorber

Item	Dimensions	Tightening torque in Nm/Comments
9	M14 x 1,5	75 Nm (55 ft-lb)
10	M8	33 Nm (24 ft-lb)

Spring characteristic values (spring rate/diameter/length):

Helper spring	75/60/43	Porsche spare part No.: 996.343.537.90
Main spring	240/60/120	Porsche spare part No.: 991.343.531.8C

Downloaded from www.Manualslib.com manuals search engine

3.2.6 Front axle anti-roll bar

The adjustable double blade-type anti-roll bar on the front axle can be adjusted in seven positions each on both ends, any position resulting in a 15° change of the bending lever. Maximum stiffness is achieved when the bending lever is arranged parallel to the anti-roll bar link. Minimum stiffness is achieved when the bending lever is at a 90° angle to the anti-roll bar link.

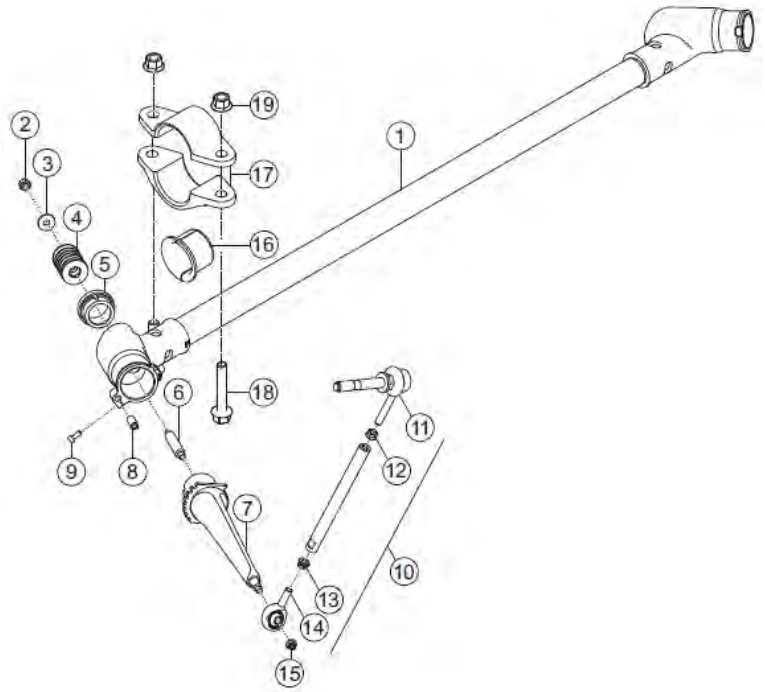

3.2.6.1

List of tightening torques front axle anti roll bar

Item	Dimensions	Tightening torque in Nm/Comments
2	M6	10 Nm (7 ft-lb)
8	M8 x 18	Set 0.25mm (0.0098 inch) gap
9	M4 x 10	3 Nm (2,2 ft-lb)
12	M8	10 Nm (7 ft-lb)
13	M8	10 Nm (7 ft-lb)
15	M6	13 Nm (10 ft-lb)
19	M10	65 Nm (48 ft-lb)

NOTE

An asymmetric adjustment (different blade position left/right) of the anti-roll bar will result in different driving behaviors in left or right turns.

Downloaded from www.Manualslib.com manuals search engine

NOTE

When rotating the bending levers (7), do not damage them by using improper tools. Notches or other damages may result in breakage of the bending lever.

The following chart shows the wheel-related stiffness of the anti-roll bar depending on the blade position. The left and the right blade are always in the same position:

Overall stiffness related to blade angle, front axle

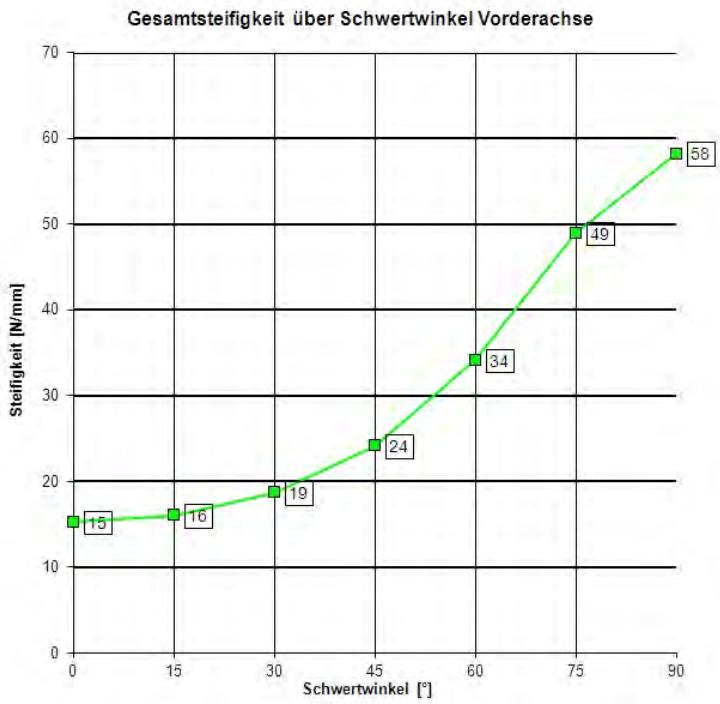

3.2.6.3

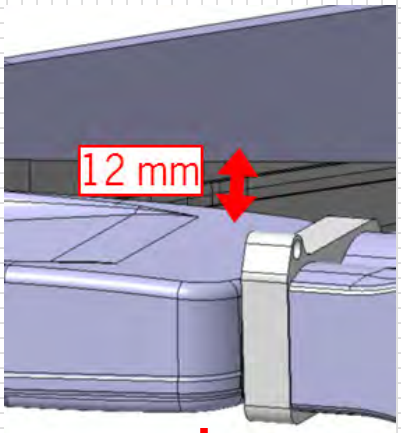

3.2.6.2

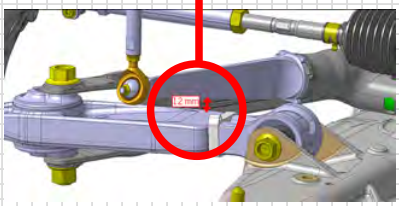

3.2.6.4

Coupling rod setting

When adjusting the coupling rods, make sure to exclude any collision between the anti-roll bar and other components over the entire suspension travel. On the front axle, there is a risk of collision with the transverse control arm or the tie rod if the setting is incorrect. A distance of 12 mm (0.47 inches) towards the control arm is recommended when the axle is decompressed (figure 3.2.6.2).

Downloaded from www.Manualslib.com manuals search engine

3.3 Rear axle

3.3.1

The longitudinal and transverse control arms of the multi-link rear axle are attached separately to the wheel mount. The beads attached to the mounting points of the upper transverse control arm identify the correct mounting position. When installed, they should be facing upwards. The upper and lower transverse control arm are screwed to the body by means of the side part. The lower longitudinal control arm is connected to the body by means of a forged bracket. A blade-type anti-roll bar that is adjustable on both sides has a controlled impact on the vehicle's rolling behavior. Separate cooling air channels, which are supplied with air through a NACA duct in the underbody, are provided on the left and on the right for cooling the inner universal joint shaft bearings.

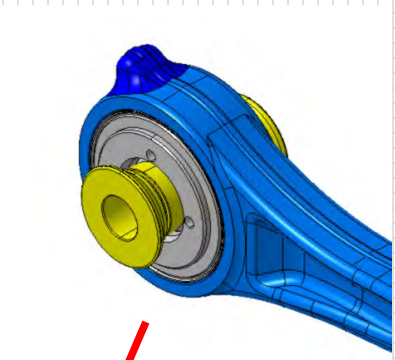

3.3.2

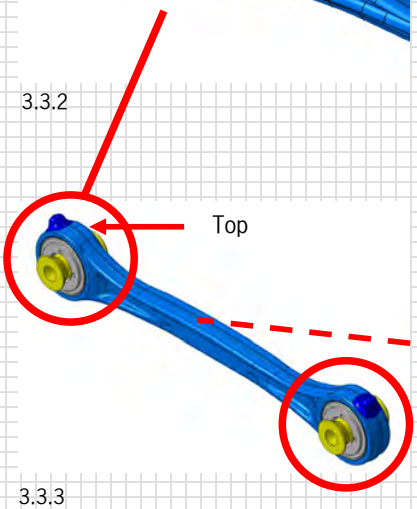

3.3.3

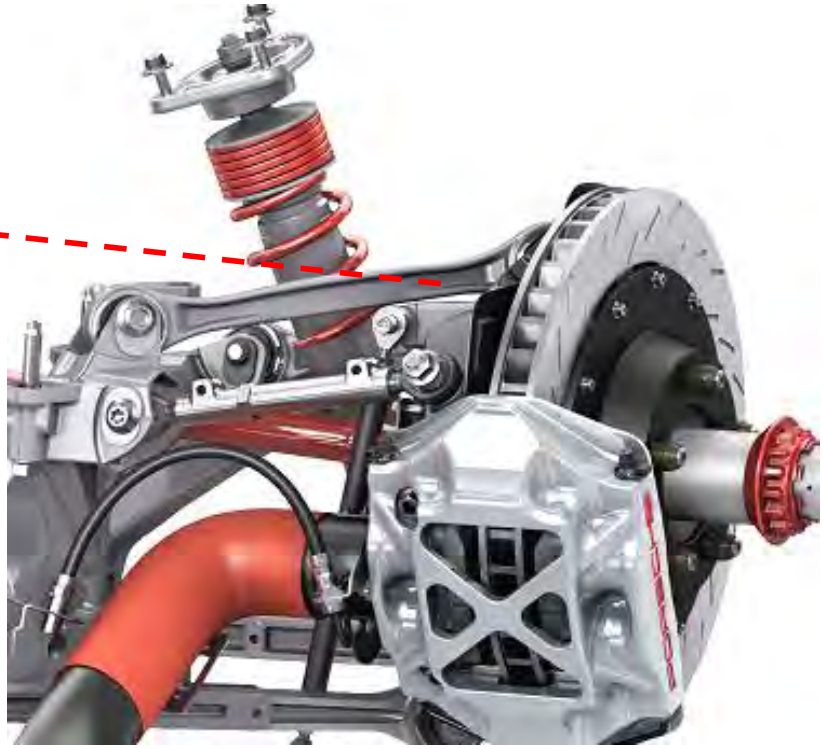

3.3.4

Downloaded from www.Manualslib.com manuals search engine

3.3.1 Rear axle control arm and tie rod

The use of high-performance joint bearings in all control arms minimizes play and greatly reduces unwanted elastokinematic effects.

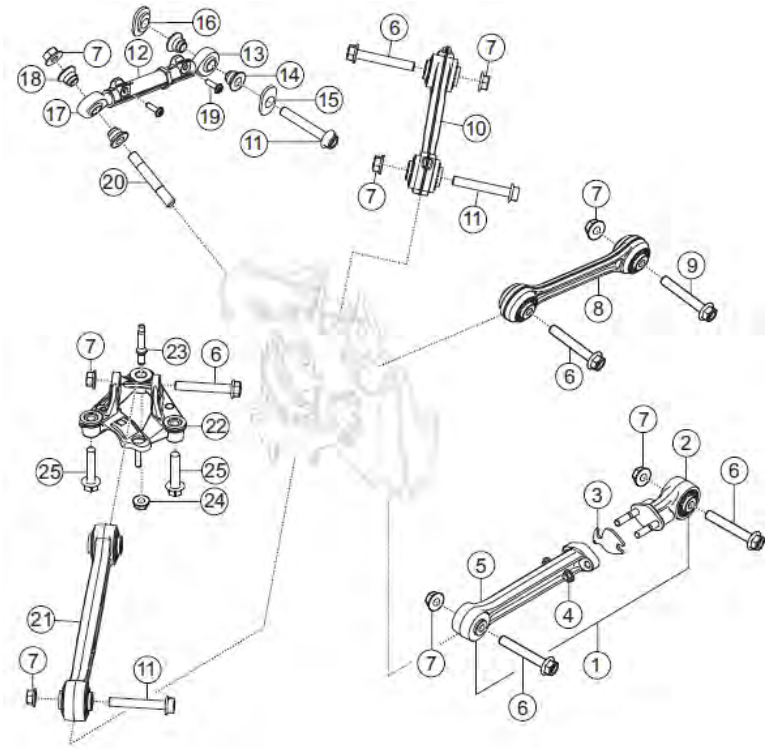

3.3.1.1

List of tightening torques and tie rod

Item	Dimensions	Tightening torque in Nm/Comments
2		Stud: 10 Nm + Loctite 276
7	M12	120 Nm (88.5 ft-lb)
19	M6 x 20	10 Nm (7.4 ft-lb)
20	M12 x 75	16 Nm (11.8 ft-lb)
24	M10	65 Nm (48 ft-lb)
25	M10 x 50	65 Nm (48 ft-lb)
4	M10	65 Nm (48 ft-il)

NOTE

The rear screw of the trailing arm bracket, consisting of the screw Porsche spare part no.: 999.072.836.01 and the spacer sleeve Porsche spare part no.: 999.331.781.8A (figure 3.3.1.2) must be tightened to 65 Nm (48 ft-lb).

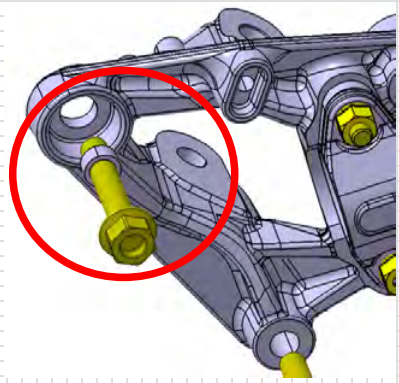

3.3.1.2

Downloaded from www.Manualslib.com manuals search engine

3.3.2 Fixation trailing arm bracket

Porsche Motorsport points out that a technical change of the sub frame 3 makes it necessary to use different bolts to attach the bracket for the trailing arm on both sides, according to the version of the sub frame 3.

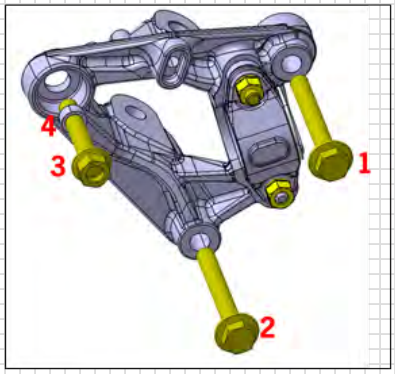

3.3.2.2

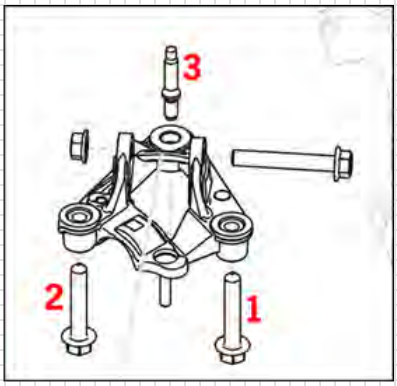

3.3.2.1

Sub frame versions

Version number on the bottom of sub frame 3 (red circle).

Part specification

Sub frames with version number 009:

Pos	Part number	Name	Pcs. per car
1+2	999.072.055.01	hex screw M10X80	4
3	999.072.836.01	hex screw M10X60	2
4	991.331.781.8A	sleeve	2

Sub frames with version number 011 and on:

Pos	Part number	Name	Pcs. per car
1+2	999.072.055.01	hex screw M10X80	4
3	999.061.124.01	stud M10	2

Downloaded from www.Manualslib.com manuals search engine

3.3.3 Rear axle transverse control arm

The two-piece, forged aluminum rear axle transverse control arm allows for camber adjustment.

The camber is adjusted on the transverse control arm (1) using spacers. The maximum permitted spacer width is 15 mm (0.59 inches) on the rear axle.

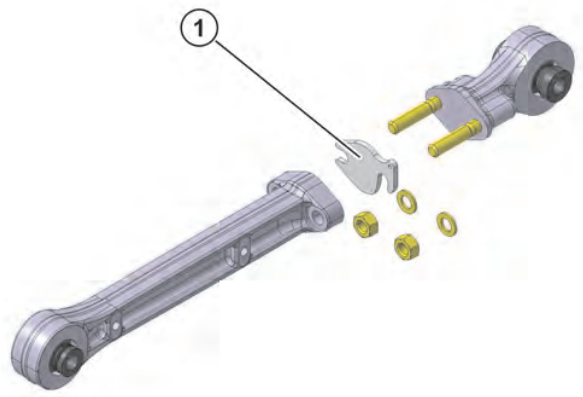

3.3.3.1

The following adjustment washers can be purchased at Porsche Motorsport:

0.50 mm	996.341.543.80
1.00 mm	996.341.543.81
2.00 mm	996.341.543.82
4.00 mm	996.341.543.83
8.00 mm	996.341.543.84

The maximum permissible adjustment washer width to be achieved by combining the individual washers (1) is 15 mm on the rear axle.

NOTE

When inserting the spacers it´s important to use as less spacers as possible to get to the desired length. This prevents potential clamping force loss caused by settling process.

Thinner shims have to be mounted on the inside of the wishbone (side of the fixed bearing). This will avoid a clamping of the shims on the tapered area of the stud (see red colour, picture 3.3.3.2). The picture shows a section of the left wishbone assembly.

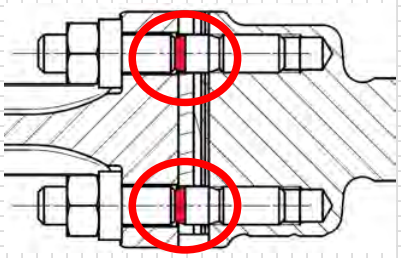

3.3.3.2

Downloaded from www.Manualslib.com manuals search engine

3.3.4 Rear axle wheel mount

The aluminum rear axle wheel mount is still made as a torsion-proof and bending-resistant hollow casting part.

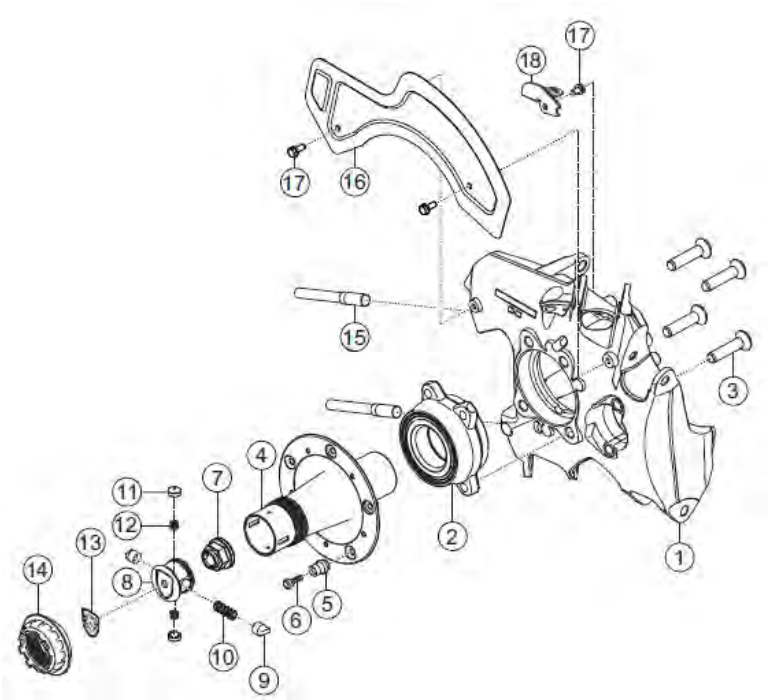

3.3.4.1

List of tightening torques rear axle wheel mount

Item	Dimensions	Tightening torque in Nm/Comments
3	M12 x 1,25 x 45	170 Nm (125 ft-lb)
6	M8 x 32	35 Nm (26 ft-lb)
7	M22 x 1,5	470 Nm (347 ft-lb) then free (ca.90°) then 470 Nm (347 ft-lb)
14		500-525 Nm (369/387 ft-lb ft-lb) (lubricate with Alupaste)
17	M6 x 16	10 Nm (7 ft-lb)
15	M10 x 1,5	After demounting replace, microencapsulation! 21 Nm (15 ft-lb)

Downloaded from www.Manualslib.com manuals search engine

3.3.5 Rear axle shock absorber

The rear axle shock absorber is a high performance gas pressure racing shock absorber in two-tube design that is provided with an additional bottom valve. A coil spring assembly consisting of a main and a helper spring is arranged concentrically on the damper. For stroke limitation and protection of the shock absorber, the latter is equipped with an integrated bump stop.

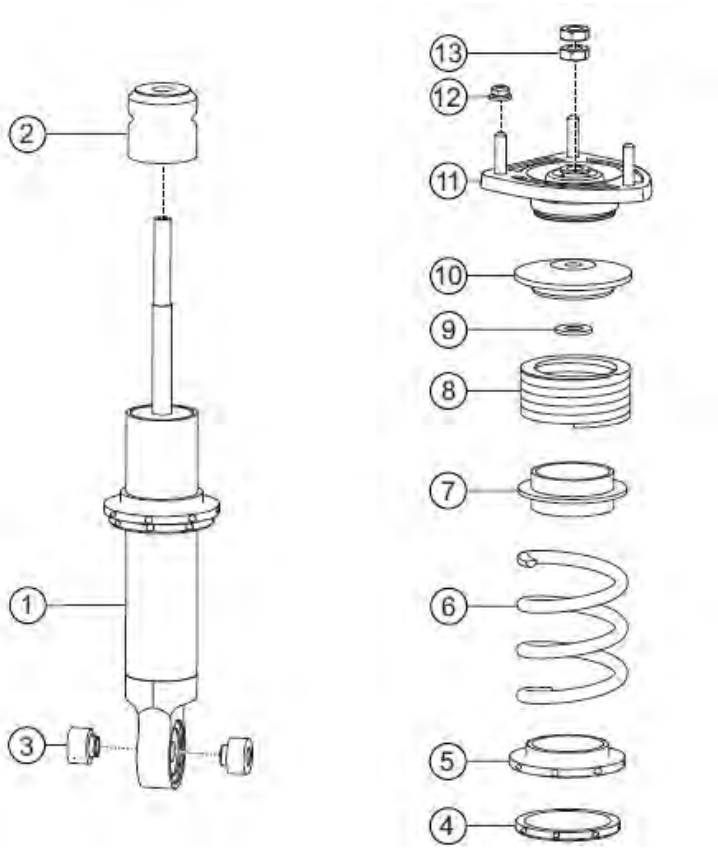

3.3.5.1

List of tightening torques for rear axle shock absorber

Item	Dimensions	Tightening torque in Nm/Comments
12	M8	33 Nm (24.3 ft-lb)
13	M12	Lower nut 40 Nm/upper nut 35 Nm (29.5/25.8 ft-lb)

When tightening the upper nut (13), the lower nut (13) should be locked.

Spring characteristic values (spring rate/diameter/length):

Helper spring	80/60/60	Porsche spare part No.: 997.333.537.90
Main spring	260/60/130	Porsche spare part No.: 991.333.531.8C

Downloaded from www.Manualslib.com manuals search engine

3.3.6 Rear axle anti-roll bar

Like the front anti-roll bar, the rear anti-roll bar can be adjusted in seven positions, each position resulting in a 15° change of the bending lever. Maximum stiffness of the anti-roll bar is achieved when the bending lever is arranged parallel to the anti-roll bar link. Minimum stiffness is achieved when the bending lever is at a 90° angle to the anti-roll bar link.

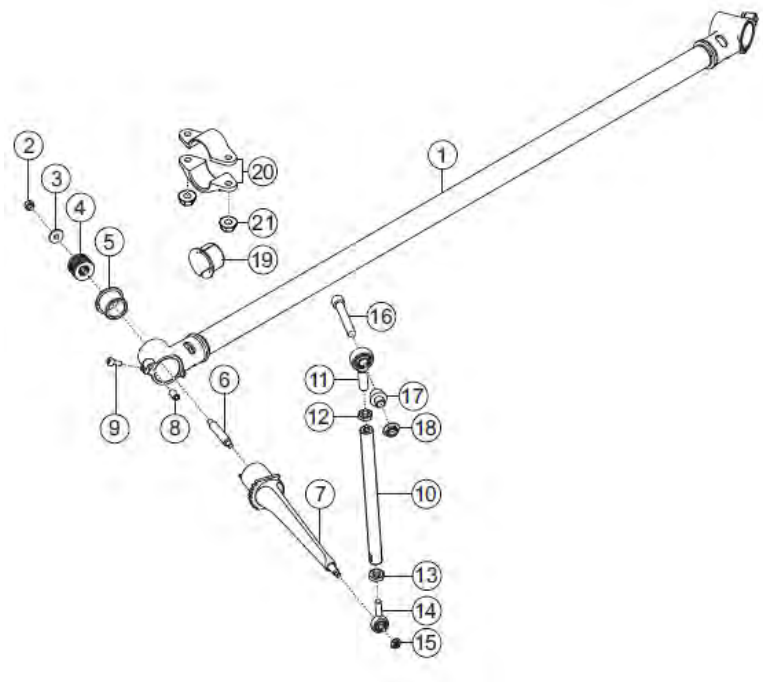

3.3.6.1

List of tightening torques rear axle anti-roll bar

Item	Dimensions	Tightening torque in Nm / Comment
2	M6	10 Nm (7.4 ft-lb)
8	M8 x 18	Set 0.25mm (0.0098 inch) gap
9	M4 x 10	3 Nm (2.2 ft-lb)
12	M8	10 Nm (7.4 ft-lb)
13	M8	10 Nm (7.4 ft-lb)
15	M6	13 Nm (10 ft-lb)
18	M8	23 Nm (17 ft-lb)
21	M8	25 Nm (18.4 ft-lb)

NOTE

An asymmetric adjustment (different blade position left/right) of the anti-roll bar will result in different driving behaviors in left or right turns.

Downloaded from www.Manualslib.com manuals search engine

NOTE

When rotating the bending levers (7), do not damage them by using improper tools. Notches or other damages may result in breakage of the bending lever.

The following chart shows the wheel-related component stiffness of the anti-roll bar depending on the blade position. The left and the right blade are always in the same position:

Overall stiffness related to sword angle, rear axle

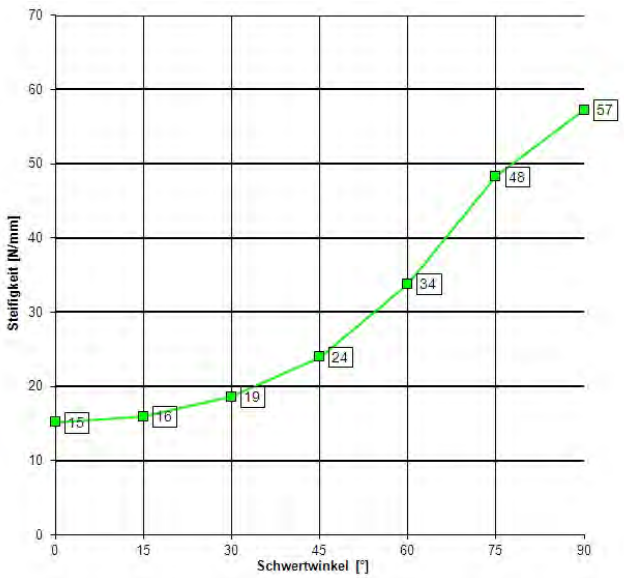

3.3.6.2

Coupling rod setting

When adjusting the coupling rods, make sure to exclude any collision between the anti-roll bar and other components over the entire suspension travel. On the rear axle, there is a risk of collision with the longitudinal control arm or the rim if the setting is incorrect. A distance of 12 mm (0.47 inches) towards the control arm is recommended when the axle is decompressed (figure 3.3.5.3).

Axial clearance compensation

In order to counteract a possible backlash of the stabilizer, Porsche Motorsport offer two different spacers (pink).

Spacer 1mm Porsche spare part No.: 991.343.761.8A

Spacer 2 mm Porsche spare part No.: 991.343.761.8B

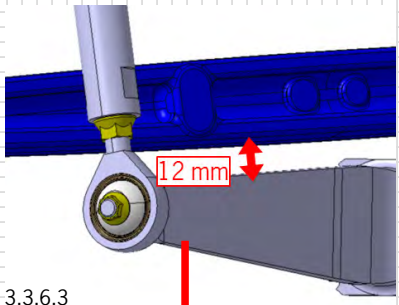

3.3.6.3

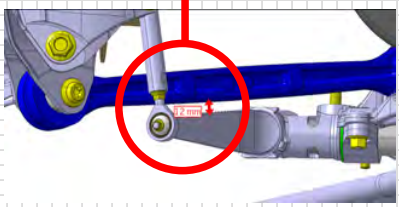

3.3.6.4

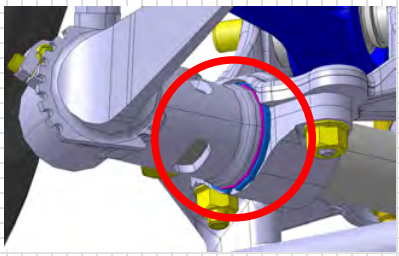

3.3.6.5

Downloaded from www.Manualslib.com manuals search engine

3.3.7 Rear axle side part

The side parts made of cast aluminum are used as connecting elements between control arms and body.

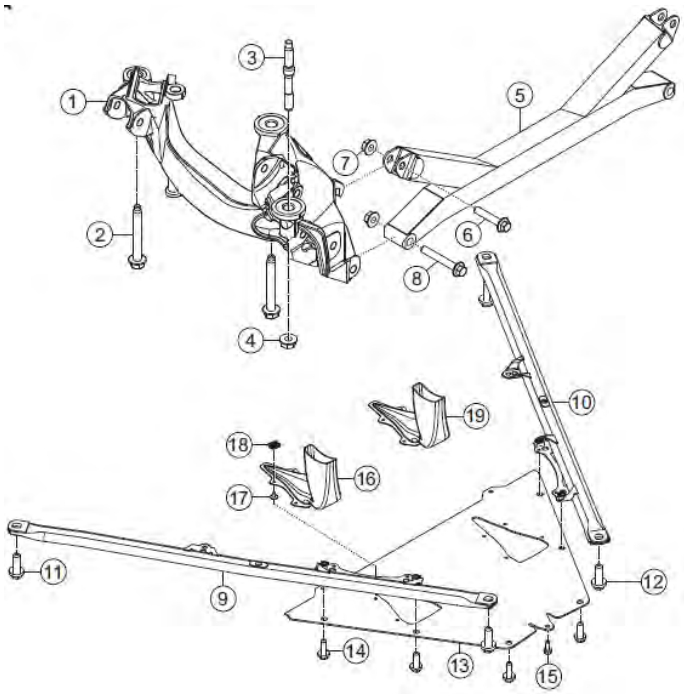

3.3.7.1

List of tightening torques for rear axle side part

Item	Dimensions	Tightening torque in Nm/Comments
2	M12 x 1.5 x 95	120 Nm (88.5 ft-lb)
4	M12	120 Nm (88.5 ft-lb)
7	M12 x 1.5	120 Nm (88.5 ft-lb)
11	M12 x 45	120 Nm (88.5 ft-lb
12	M12 x 45	120 Nm (88.5 ft-lb)
14	M8 x 25	23 Nm (17 ft-lb)
15	M6 x 16	10 Nm (7.4 ft-lb)
17	4.8 x 13	3.2 Nm (2.3 ft-lb)

Items 16 and 19 are cooling air ducts that lead to the drive shafts.

3.4 Wheel alignment

Precise wheel alignment is essential for achieving the optimum vehicle performance. Porsche Motorsport recommends proceeding as described below.

Downloaded from www.Manualslib.com manuals search engine

3.4.1 Preparatory measures

The conditions prevailing while driving have to be produced as far as possible under static conditions. Porsche Motorsport recommends using the set up wheels mentioned below for the 911 GT3 Cup (991).

Pos	Part number	Description	Pcs per car
1	997.450.230.91	*set up wheel (rolling wheel)*	2
2	997.450.229.91	*set up wheel (fixed wheel)*	2
3	997.450.335.9A	*adapter for set up wheel*	4

For this purpose, the following measures have proven to be extremely helpful:

- Place driver's compensation weight on the driver's seat
- Set air pressure to 2.0 bar (29 psi)
- Fill the tank with 50 % of the fuel quantity necessary for the race/practice

The following work order is recommended when performing a complete vehicle alignment:

1. Unhook the anti-roll bars
2. Preset vehicle height
3. Rear axle: set the camber first, then the toe
4. Front axle: set the camber first, then the toe
5. Set vehicle height and wheel loads
6. Wheel loads are set by changing the vehicle height; you should try to reach the lowest possible wheel load deviation per axle (left to right)
7. Hook up the anti-roll bars without tension

Downloaded from www.Manualslib.com manuals search engine

3.4.2 Vehicle ride height measuring points

For ride height measuring, the vehicle should be on a flat surface (setup plate). Front and rear axle have to be compressed and decompressed several times.

Measuring point, front axle:

The vehicle front ride height is measured on the front mounting screw of the front axle cross member.

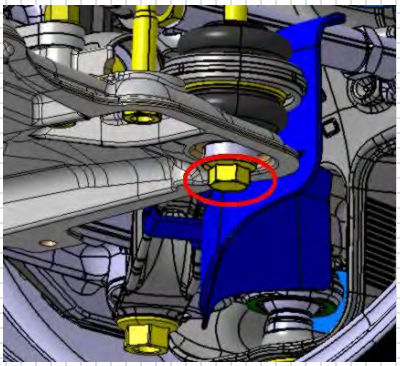

3.4.2.1

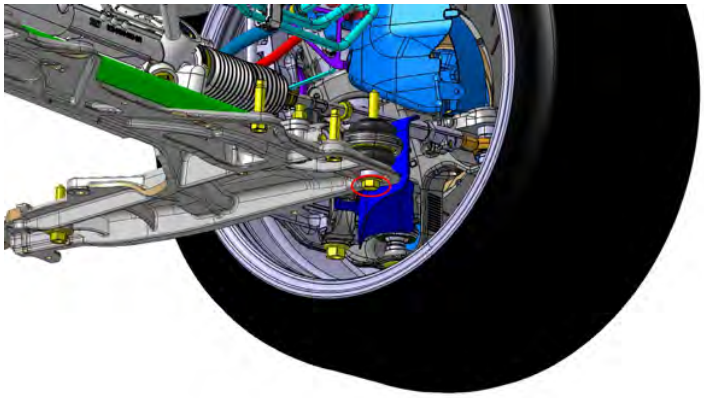

3.4.2.2

Measuring point, rear axle:

The vehicle rear ride hight is measured at a surface specially milled for this purpose on the rear axle side part.

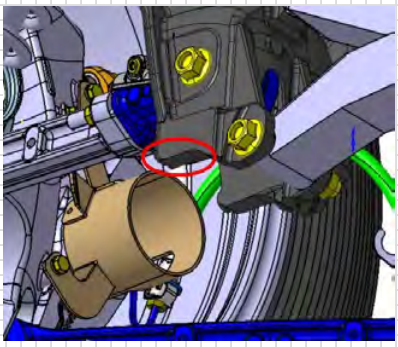

3.4.2.3

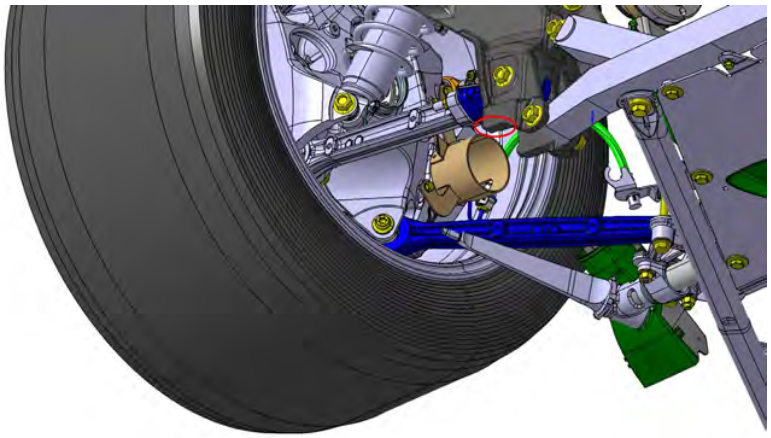

3.4.2.4

Downloaded from www.Manualslib.com manuals search engine

3.5 Steering system

The hydraulic power steering is derived from the 911 GT3 Cup (997) while the power steering pump has its origins in the 911 GT3 R. The power steering pump unit is located in the front-end and consists of an electrically driven pressure pump and an integrated hydraulic oil tank installed on top of it.

Hydraulic oil filling quantity: **0.65 liters (0.69 qts)**

System pressure: **96 bar (1,392 psi)**

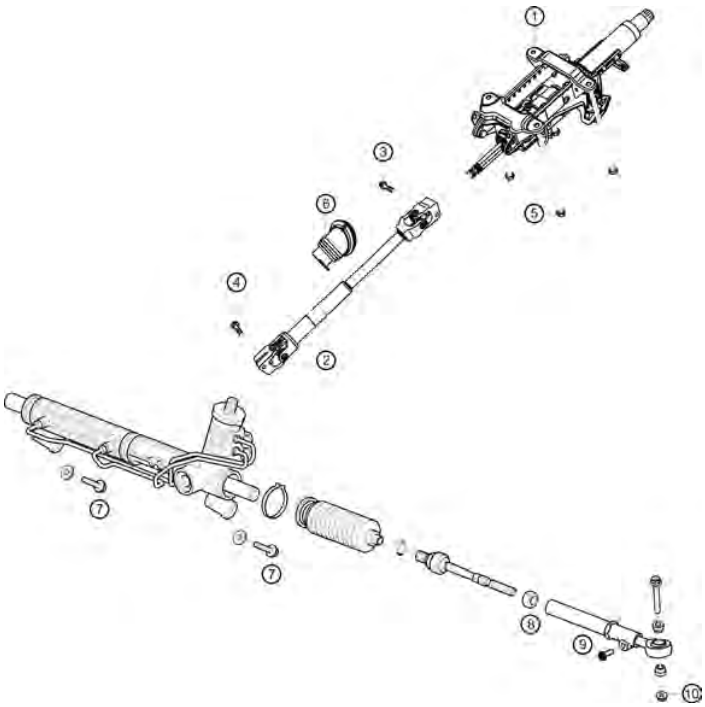

3.5.2

List of tightening torques for steering system

Item	Dimensions	Tightening torque in Nm/Comments
3	M8 x 30	20 Nm (14.75 ft-lb) + 90°
4	M8	23 Nm (17 ft-lb)
6	M8	23 Nm (17 ft-lb)
7	M10 x 65	70 Nm (51.6 ft-lb)
8	M14 x 1.5	50 Nm (37 ft-lb) (hold tie rod)
9	M6 x 20	16 Nm (11.8 ft-lb)
10	12 x 1,5	120 Nm (88.5 ft-lb)

3.5.1

When adjusting the tie rod on the front axle, make sure to maintain a sufficient screwing depth. It is recommended to perform first a rough adjustment on the inner axial joint and then to set the precise value by means of the outer ball joint with fine threads. The maximum thread projection is 20 mm (0.79 inches) on the inside and 18 mm (0.71 inches) on the outside. Adjust the strut mount inwardly in order to ensure a sufficient screwing depth of the tie rod threads for high camber values (>4.5°).

Refer to illustration 3.2.2.2

Downloaded from www.Manualslib.com manuals search engine

The components and the assembly sequence of the steering wheel quick release are shown in the illustration below.

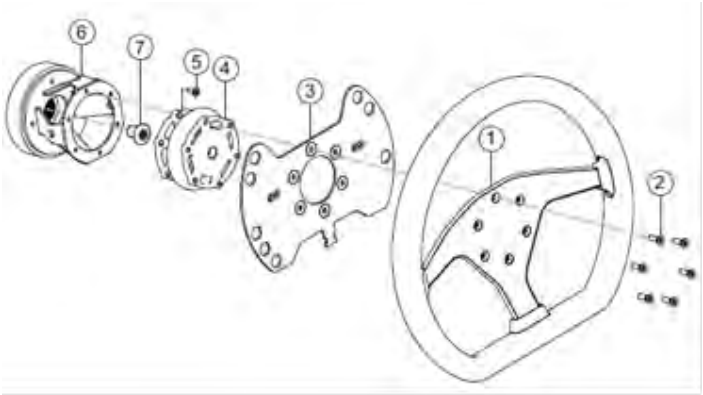

3.5.3

List of tightening torques

Item	Dimensions	Tightening torque in Nm/Comments
2	M5 x 16	6 Nm (4.4 ft-lb)
5	M5 x 35	6 Nm (4.4 ft-lb)
7	M18 x 26	50 ±5 Nm (37 ± 3.7 ft-lb)

Downloaded from www.Manualslib.com manuals search engine

NOTE

Under no circumstances should the rack and pinion steering and the power steering pump be repaired or dismantled. Damage to the steering system can occur due to a lack of oil in the circuit of the hydraulic system. Even small oil leaks may cause damage to the power steering pump due to the high system pressure.

3.5.1 Bleeding the steering system

Bleeding should be performed by two persons.

For filling the entire system, e.g. after replacing the steering system or lines or after a high loss of fluid, the engine has to be started briefly and stopped again right afterwards. The fluid level in the container drops rapidly and it must be ensured that “Pentosin” Porsche spare part No.: (000.043.206.56) is continuously replenished while the engine is running. During this procedure, the reservoir should never run dry.

The electric hydraulic pump operates only while the engine is running. The compensating tank must be filled before starting the engine to vent the system. The fluid level in the tank has to be checked immediately after starting the engine.

Turn the steering wheel quickly from one stop to the other, allowing the air in the cylinders to escape. Do not turn the steering wheel with increased force against the end stop to prevent unnecessary pressure peaks in the system.

The fluid level must be constantly monitored during venting. If the fluid level drops, "Pentosin" has to be replenished until the level no longer changes and no air bubbles are visible on the surface of the fluid when setting the steering.

The fluid level is checked with the dipstick located in the container lid, while the pump is running.

Downloaded from www.Manualslib.com manuals search engine

3.6 Rims and tire

3.6.1 Rim

Dimensions of the stiffness-optimized, one-piece forged aluminum rim in Porsche design:

Front axle: 10.5”x18” (one piece)	Tire size: 27/65-18
Rear axle: 12”x18” (one piece)	Tire size: 31/71-18

3.6.1.1

3.6.2 Tires

The new 911 GT3 Cup (991) is delivered by Porsche Motorsport only with rain tires. A sticker provided on the windshield (figure 3.6.2.1) will indicate this restriction in use of the tires upon delivery of the vehicle.

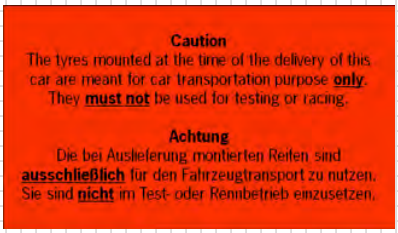

3.6.2.1

Tire dimensions:

Tire dimensions on the front axle:	27/65-18
Tire dimensions on the rear axle:	31/71-18

NOTE

Only use the tires mounted at the time of delivery for vehicle transportation. They must not be used for testing or racing.

Downloaded from www.Manualslib.com manuals search engine

3.7 Brake system

3.7.1 General

3.7.1.1

The 911 GT3 Cup (991) is equipped with a dual-circuit brake system with two separate master cylinders. Brake balance between front and rear axle can be adjusted with the help of a balance beam using a knob in the vehicle's interior.

The brake is a racing brake by "Performance Friction Brakes" (caliper, internally vented disks and pad) which is suitable for long-distance driving and was developed by Porsche Motorsport. Six piston fixed calipers are provided on the front axle, four piston fixed calipers in monoblock design on the rear axle. Brake pistons of different sizes are in use on the brake caliper, which prevent diagonal wear of the brake pads. The brake disks are vented and slotted steel brake disks.

Dimensions

Front axle: 380x32 mm (14.96 x 1.26 inches)

Rear axle: 380x30 mm (14.96 x 1.18 inches)

Downloaded from www.Manualslib.com manuals search engine

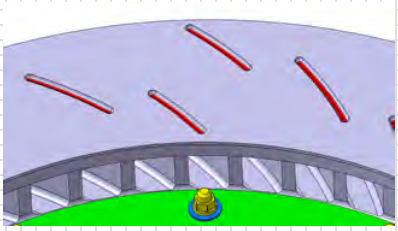

3.7.1.2

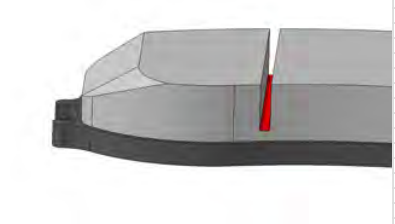

3.7.1.3

Brake disk wear limit

The wear limit is reached when the disk has been worn down to the bottom of the slot (figure 3.7.1.2). The disk should also be replaced if there are cracks up to the edge of the disk that are caused by increased thermal stress.

Brake pad wear limit

The wear limit is reached when the disk has been worn down to the bottom of the slot. In addition, the pads should also be replaced if excessive diagonal wear is detected. In this case, the brake pistons of the caliper have to be checked immediately to find out the cause.

Repair instructions

A repair kit with seals and pistons is available, as well as a repair kit containing only seals. Pistons have to be replaced only if they are mechanically damaged. The service life of the seals is 60 hours before they have to be replaced. Under extreme temperature load, they may have to be replaced even earlier. This is indicated by sluggishly moving wheels or stuck pistons. Repair kits can be purchased at Porsche Motorsport.

Refer to the maintenance section, chapter 7.4.7 „Replacing the piston seal rings”

Downloaded from www.Manualslib.com manuals search engine

3.7.2 Front axle brake

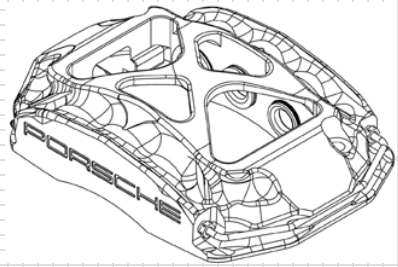

3.7.2.1

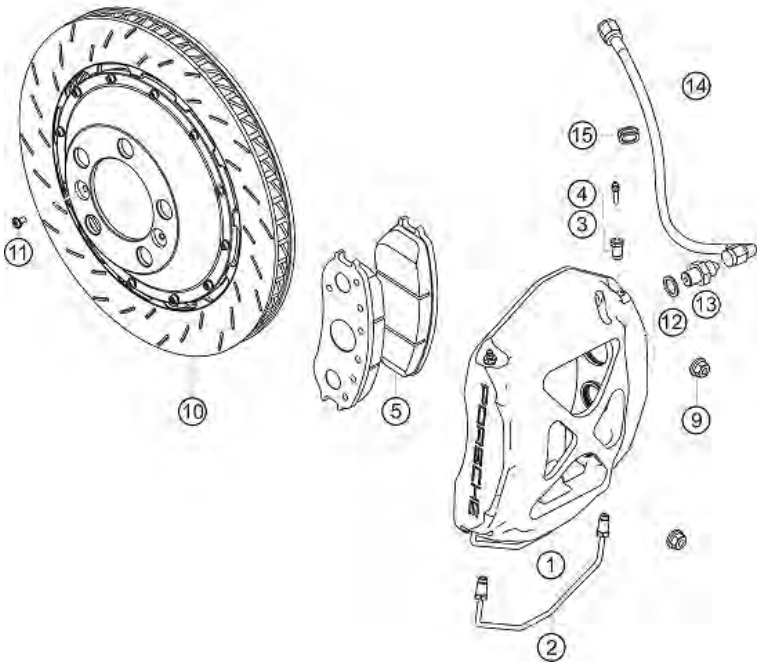

3.7.2.2

List of tightening torques for front axle brake

Item	Dimensions	Tightening torque in Nm/Comments
2		20 Nm (14.75 ft-lb)
3		20 Nm (14.75 ft-lb)
4		5 Nm (3,7 ft-lb)
14		16 Nm (11.8 ft-lb)
9	M10	65 Nm (48 ft-lb)
11	M6X12	10 Nm (7.4ft-lb) + Loctite 243

Downloaded from www.Manualslib.com manuals search engine

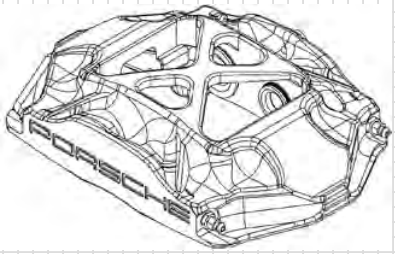

3.7.3.1

3.7.3 Rear axle brake

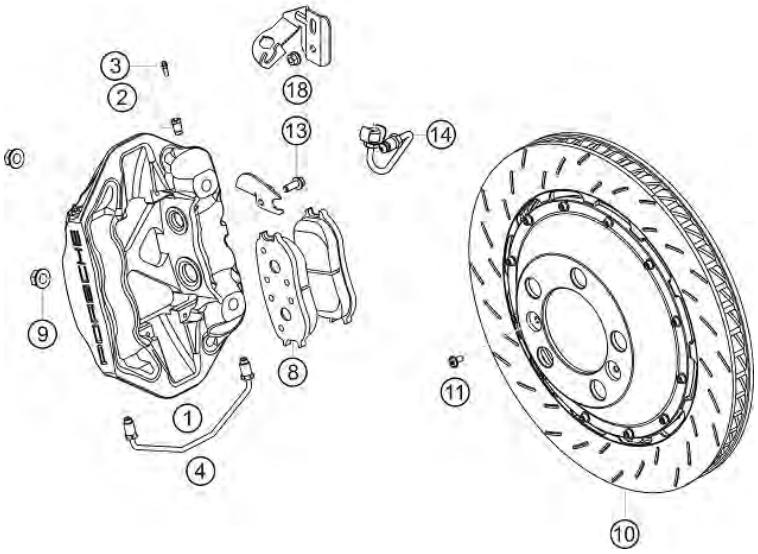

3.7.3.2

List of tightening torques for rear axle brake

Item	Dimensions	Tightening torque in Nm/Comments
4		20 Nm (14.75 ft-lb)
2		20 Nm (14.75 ft-lb)
3		5 Nm (3,7 ft-lb)
14		16 Nm (11.8 ft-lb)
9	M10	65 Nm (48 ft-lb)
11	M6 x 12	10 Nm (7.4 ft-lb) + Loctite 243

Downloaded from www.Manualslib.com manuals search engine

3.7.4 Master cylinders

Both master cylinders supplied by AP Racing have a diameter of 17.8 mm (0.7 inches). An AP Racing ID-Number on the master cylinder can be used to designate the cylinder. Porsche spare part No.: 991.355.170.8C

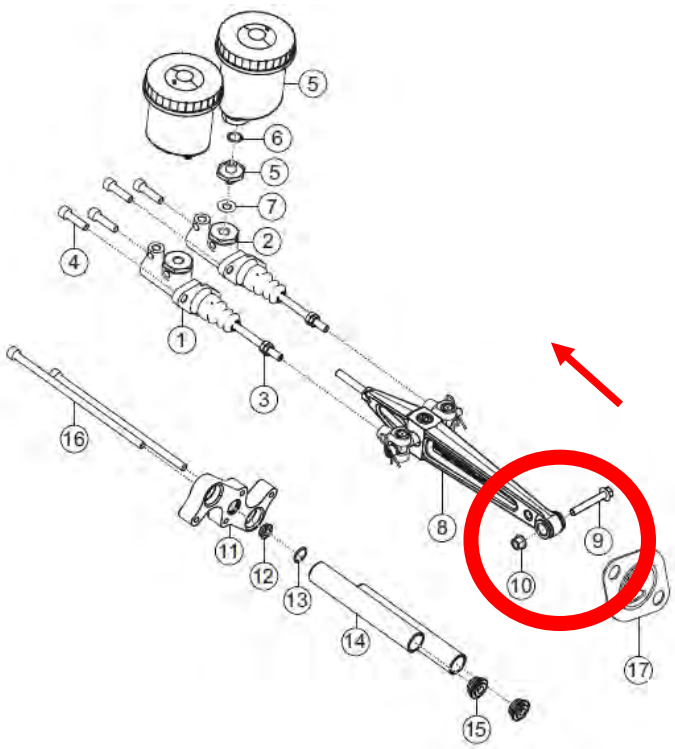

3.7.4.1

List of tightening torques for master cylinders

Item	Dimensions	Tightening torque in Nm/Comments
4	M8 x 30	23 Nm (17 ft-lb)
9		Insert the bolt from the right!
10	M8	23 Nm (17 ft-lb)
16	M8 x 200	23 Nm (17 ft-lb)

NOTE

Insert the bolt (item 9) from the right as otherwise there is a risk of collision. The arrow indicates the driving direction.

Downloaded from www.Manualslib.com manuals search engine

3.7.5 Changing the brake fluid

Racing Brake Fluid-325° (DOT 4) supplied by Performance Friction Brakes should be used. Proceed as follows when changing the brake fluid.

- Remove the brake fluid from the brake fluid reservoir of the two master cylinders using a syringe.
- Replenish new brake fluid.

Flushing

1. Build up pressure with the brake pedal
2. Open the front axle and rear axle brake bleeder valves simultaneously and close them again
3. Only release the brake pedal when the bleeder valves have been closed. Build up new pressure with the brake pedal.
4. Repeat the process and make sure that there is enough fluid in the reservoir.
5. Perform flushing operation on both valves of a caliper (Order: inside then outside and inside again)

It is recommended to bleed the system after every session and to change the brake fluid after every race.

Downloaded from www.Manualslib.com manuals search engine

3.8 Brake pressure distribution

The brake pressure distribution between front and rear axle is set by means of a balance beam adjustment. Turning the dial below the dashboard changes the balance beam lever ratio. The rotations of the knob are recorded using a potentiometer and stored in the display.

Turning the brake power adjustment dial in the “R“ direction increases the rear axle brake pressure in relation to the front axle. In the “F” direction, the situation is correspondingly reversed.

3.8.1

Brake Pressure Distribution 911 GT3 CUP (991)

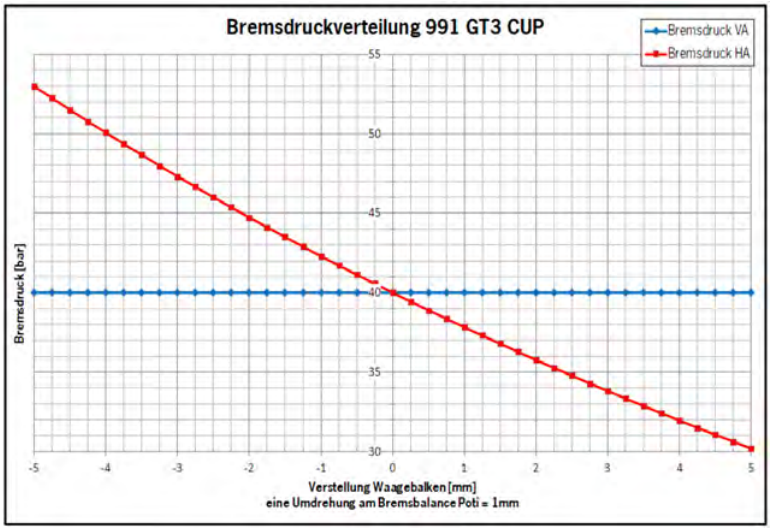

3.8.2

Bremsdruckverteilung = brake pressure distribution

Bremsdruck = brake pressure

Bremsdruck VA = brake pressure front axle

Bremsdruck HA = brake pressure rear axle

Balance beam adjustment [mm] one turn on brake balance potentiometer = 1 mm =

Downloaded from www.Manualslib.com manuals search engine

3.8.1 Balance beam basic setting

In the basic position, the potentiometer should be in position “zero”. The distance between the push rod and master cylinders is symmetrical and amounts to 11.8 mm (0.465 inches). In the default setting, the balance beam should be perpendicular to the push rod at a **pedal load of 40 bar (580 psi)**.

If the adjusting wheel potentiometer is in "zero" position, a voltage of 2.5 V can be measured. When setting the balance beam, a calibration should also be carried out in the display; i.e. with the balance beam in “zero” position, the display should also be calibrated so that “zero” appears in the display.

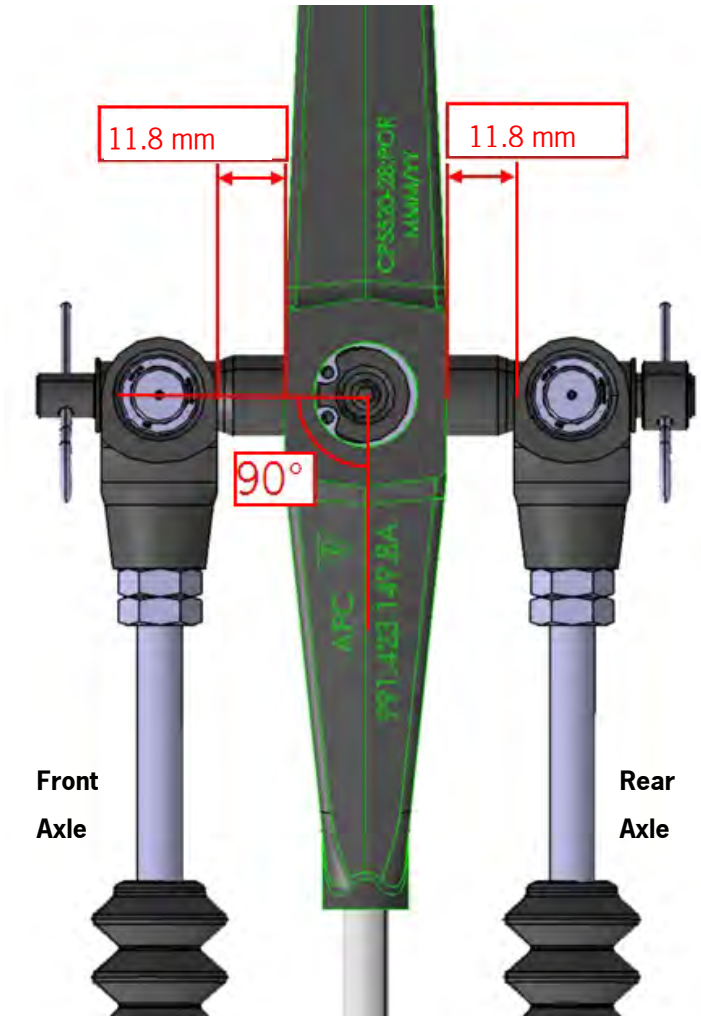

3.8.1.1

Driving direction

Downloaded from www.Manualslib.com manuals search engine

Set a clearance of approx. 5 mm between joint thread base and master cylinder threaded rod at the connection of the balance beam to the front axle master cylinder. This ensures that the balance beam is perpendicular to the push rod under load. The thread length to the lock nut can be between 56 mm to 64 mm.

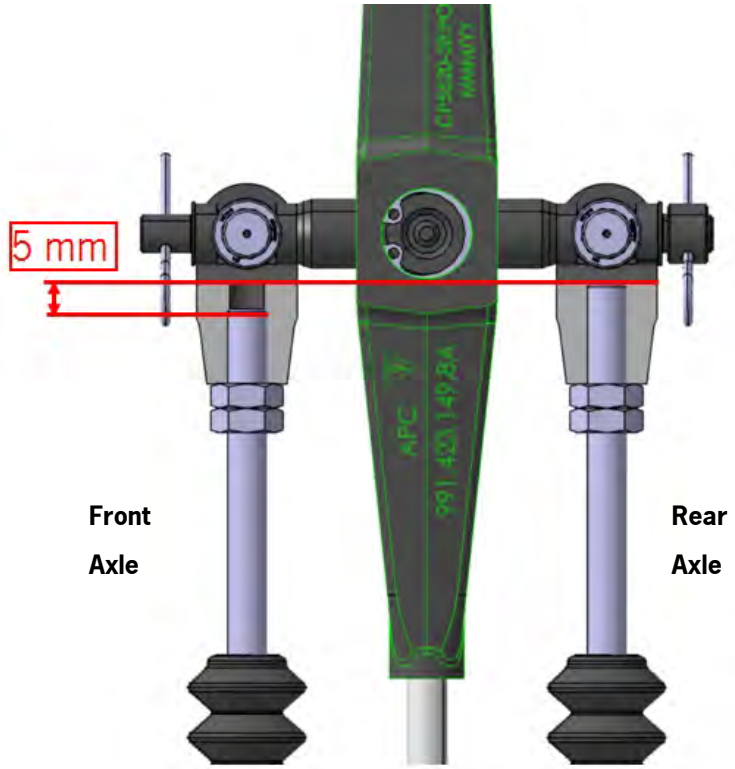

3.8.1.2

Downloaded from www.Manualslib.com manuals search engine

Key:

Pedalkraft = pedal force,

Bremskraft = brake power

HA = rear axle

VA = front axle

3.8.2 Calculating the brake power

The braking power of the front axle brake and the rear axle brake can be calculated as follows:

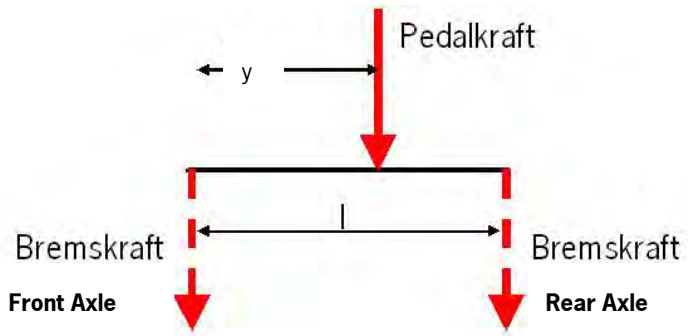

3.8.2.1

$$Bremskraft_HA = \frac{Pedalkraft \bullet y}{l}$$

$$Bremskraft_VA = Pedalkraft - Bremskraft_HA$$

3.8.2.2

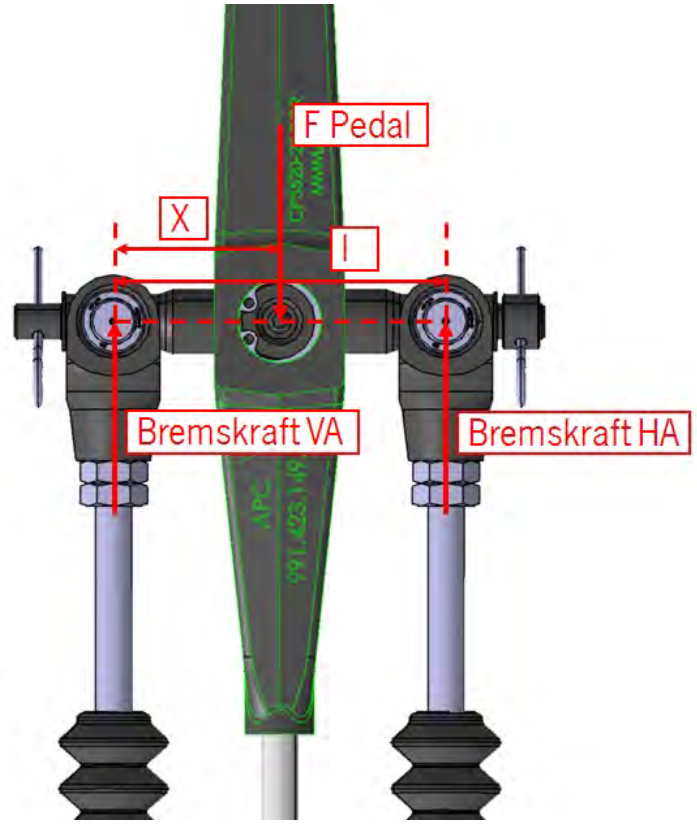

3.8.2.3

Downloaded from www.Manualslib.com manuals search engine

3.9 Balance bar replacement kit

3.9.1 Replacing the trunnion

- Remove balance bar see chapter 3.9.2
- Remove both circlipses from either end
- Remove the trunnion and both bearings by using a light press
- Clean the bore of any dirt
- Replace the lower circlip
- Push the lower bearing down the bore
- Drop the trunnion into the bearing
- Push the bearing and the circlip down until the circlip pops into the groove, the trunnions should have axial clearance and should not be tight

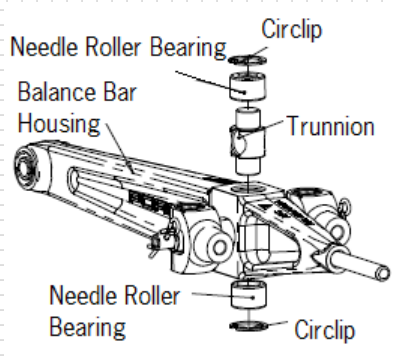

3.8.2.1

3.9.2 Replacing the balance bar

- Remove the R-clips, spacers, circlips and clevises from the balance bar
- Remove the balance bar

NOTE The retaining ring and circlip should be replaced after each dismantling

- Screw the new balance bar fully into the trunnion in the housing
- Push a new retaining ring on the balance bar

NOTE Do not over stress the retaining ring, if it deforms it will not perform correctly

- Set the balance bar back to center (see chapter “balance bar setup” 3.8.1)
- The installation is carried out in reverse order

NOTE After each race or training to prevent from dirt the needle bearing should be covered with a doughy fat

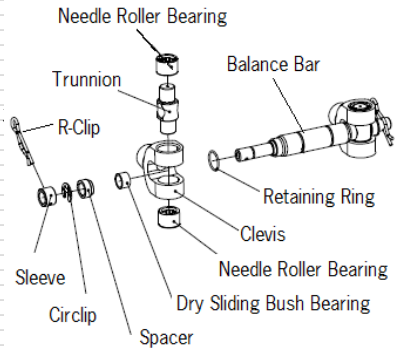

3.8.2.2

Downloaded from www.Manualslib.com manuals search engine

3.10 Performance setup

Fuel	50 liters (13.2 gal)			
Tires	Slick			
Air pressure	Front axle left	1.85 bar (26.8 psi)	Front axle right	1.85 bar
	Rear axle left	1.9 bar (27.6 psi)	Rear axle right	1.9 bar
Lip	GT3			
Height in	Front axle left	78 mm (3,07“)	Front axle right	78 mm
	Rear axle left	100 mm (3.93“)	Rear axle right	100 mm
Anti-roll bar pos.	Front axle	3		
	Rear axle	6		
Camber	Front axle left	4°50	Front axle right	4°50
	Rear axle left	4°	Rear axle right	4°
Toe	Front axle left	-5‘	Front axle right	-5‘
	Rear axle left	17‘	Rear axle right	17‘
Brake balance	Cyl. front axle	17.8 mm	Cyl. Rear axle	17.8 mm
	Balance beam			
	Display	50/55		
Spring	Front axle main	240-60-120	Front axle help	75/60-43
	Rear axle main	260-60-130	Rear axle help	80/60-60
Wheel base	Left	2,463 mm (8’1“)	Right	2,463 mm (8’1“)
Overhang	Front	1,043 mm (3’5“)	Rear	1,045 mm (3’5“)
Vehicle width	Front	1,848 mm (6’1“)	Rear	1,862 mm (6’1“)
Wing	Depth	296 mm (11.65“)	Width	1,802 mm (5’11“)
	Height	1,228 mm (4’)	Position	P6
Tires (Slick)	Front axle	27/65-18	S8H	
	Rear axle	31/71-18	S8G	

Downloaded from www.Manualslib.com manuals search engine

4 Bodywork

4.1 General

The exterior of the 911 GT3 Cup (991) is characterized by a clear distinction from the previous models, taking into account the typical 911 design. As its predecessor to reduce weight, the 911 GT3 Cup (991) is provided with a reduced sealing and sound insulation package.

The fundamental changes compared to the 997 based racecar are:

- Larger air intakes
- New LED front lights
- Compact overhangs
- Exterior mirrors on door sill
- Narrow LED tail lights
- Repositioned reflectors in the tail section

4.1.1

Downloaded from www.Manualslib.com manuals search engine

4.2 Front and side view

Front bumper

The lateral air intakes of the front bumper have been redesigned and enlarged. The newly developed daytime running lights are integrated and include LED direction indicators. The front bumper is made of PUR GF 18 (polyurethane).

4.2.1

Downloaded from www.Manualslib.com manuals search engine

Side view

At first glance, it is striking that the wheel base has been extended by 100 mm (3.94”). At the same time, the typical compact exterior dimensions of a sports car were retained. The increase in length is only +56 mm (2.2”). To achieve this, the overhangs were shortened by 32 mm (1.26”) at the front and by 12 mm (0.47”) at the rear. The noticeably more curved windshield gives the vehicle an even more dynamic, coupé-like character.

4.2.2

Downloaded from www.Manualslib.com manuals search engine

4.3 Rear view

The rear end cover has been redesigned, taking into account the aerodynamic and thermodynamic requirements:

- The tail lights are completely designed in LED technology
- The narrower shape integrates perfectly in the rear panel

The rear end cover is made of PUR GF18 (polyurethane).

4.3.1

Downloaded from www.Manualslib.com manuals search engine

4.4 Body shell

4.4.1 General

In the development of the body of the new 911 GT3 Cup (991), the following objectives were pursued, in order to further enhance the safety and performance:

- Weight reduction combined with improved strength/stiffness
- Intelligent multi-material selection
- State-of-the-art joining technologies
- Aluminum–steel hybrid construction

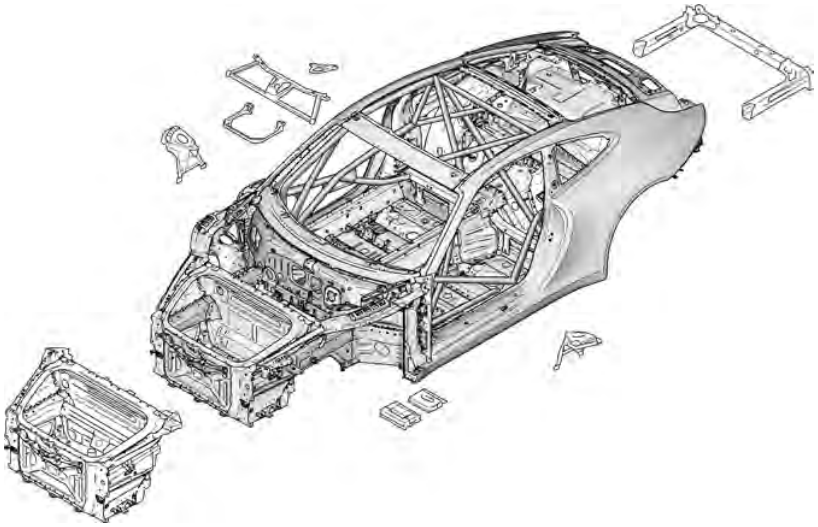

4.4.1.1

The new 911 GT3 Cup (991) has a completely newly developed body in aluminum-steel hybrid construction. The idea behind this concept of intelligent lightweight construction is to use the "right material in the right place". This means:

- Large-scale use of aluminum to reduce the vehicle weight
- Use of ultra-high strength steel to increase body stiffness and to optimize occupant safety
- Improved weight distribution
- Well-adjusted balance

Downloaded from www.Manualslib.com manuals search engine

When looking in detail at the body of the 911 GT3 Cup (991), the following material mix can be found:

Material	Scope
Aluminum	Trunk lid and fender, roof, front section, floor assembly, rear section
Steel	Rear side panels and side wall structure Front and rear roof cross members Reinforced dash panel cross member Reinforcements in the side skirts High-strength A-/B-pillars Reinforcements on front and rear section Roll cage
CFRP (carbon fiber reinforced plastic)	Doors Trunk lid Rescue opening in the roof
PC (polycarbonate)	Door windows Rear side windows Rear window

Downloaded from www.Manualslib.com manuals search engine

4.4.2 Weight distribution

The body shell is divided into the body-in-white and the attachment parts. The following chart illustrate the respective percentages of weight of the individual components.

4.4.3 Weight percentage of the Body -in-White

36.2 % aluminum

63.8 % steel

4.4.3.1

Downloaded from www.Manualslib.com manuals search engine

4.4.4 Body aluminum parts

In addition to the extensive use of aluminum sheet parts in the assemblies of the platform (front section, floor center, rear section), more cast aluminum parts and extruded sections are specifically used.

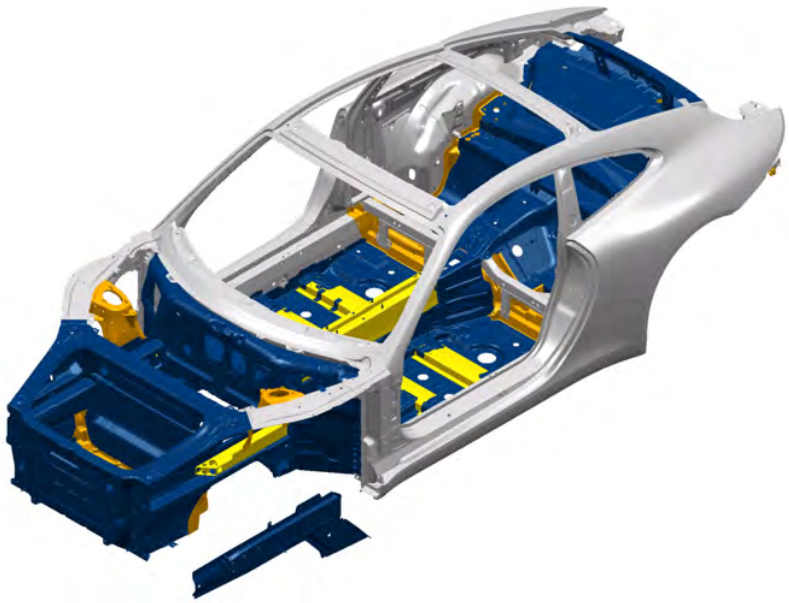

4.4.4.1

- Sheet aluminum
- Cast aluminum
- Aluminum extruded section
- Sheet steel

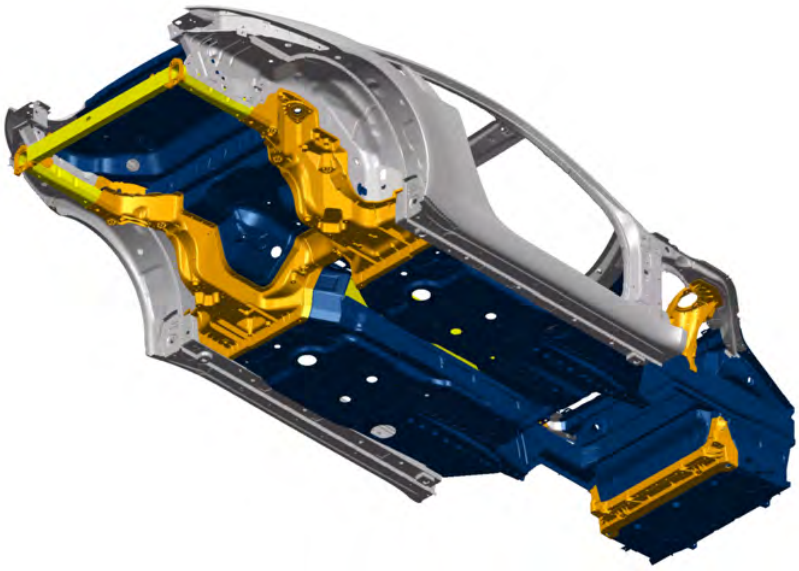

4.4.4.2

Downloaded from www.Manualslib.com manuals search engine

4.4.5 Body features

In addition to a very good power to weight ratio, the body stiffness also contributes significantly to the driving performance. Increased stiffness usually means more weight and is consequently in conflict with the goal of reducing weight. The intelligent lightweight construction in multi-material design is the solution to this problem:

- Increased torsional stiffness
- Increased torsional and bending natural frequencies
- Additional body stiffness due to the welded roll cage

Downloaded from www.Manualslib.com manuals search engine

4.4.6 Body steel parts

A further challenge in the body development of the new 911 GT3 Cup (991) consisted in connecting the floor assembly largely made up of aluminum parts to the steel assemblies of the body. Bonded joints are used in addition to pierce-riveted, clinch and flow drill connections. The benefit of bonded joints is the force transmission over the entire surface, increasing the strength of the joint.

Further developments in steel processing allow using ultra-high strength and extremely thin-walled steels that are tailored to the individual field of application of the body. They provide very high stiffness values and safety while reducing material usage to the maximum.

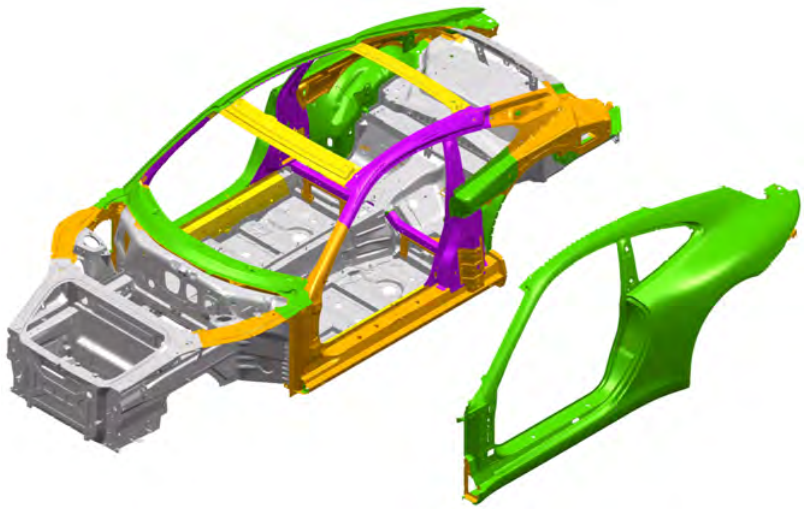

4.4.6.1

Downloaded from www.Manualslib.com manuals search engine

4.4.7 Materials overview

4.4.7.1

- Plastic parts
- Aluminum parts
- CFRP

4.4.7.2

- Modified series parts
- New parts
- Carry-over parts

Downloaded from www.Manualslib.com manuals search engine

4.4.8 Roll cage

WARNING

The roll cage is firmly welded into the body. Any modifications to the roll cage will result in non-certification or disqualification of the vehicle. In the event of an accident, an inspection of the rollcage and an approval by a technical scrutineer is mandatory.

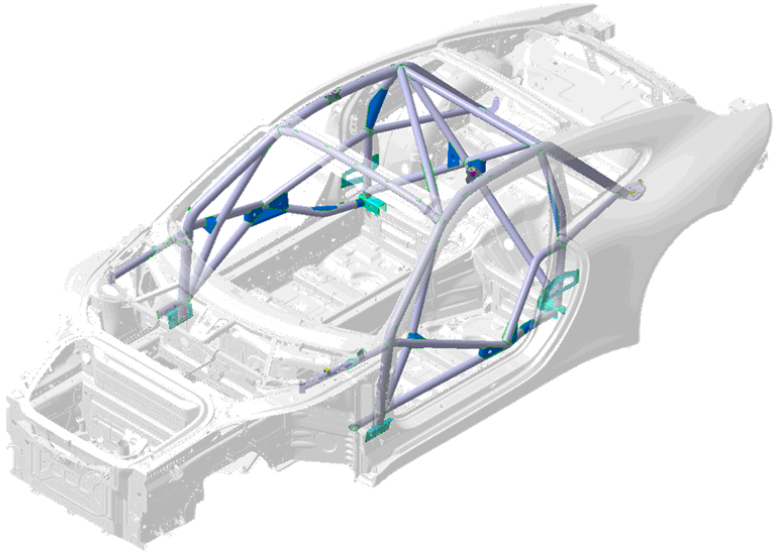

4.4.8.1

Downloaded from www.Manualslib.com manuals search engine

4.4.9 Recovery device

NOTE

One tow hook is provided both at the front and the rear section (4.4.9.1 and 4.4.9.2). When towing, make sure to avoid any jerky towing, otherwise there is a risk of damaging the body.

Two connections for attaching recovery eyebolts (4.4.9.3) are provided on the top of the rollcage. The vehicle may then be lifted using a special frame (recovery bar). The recovery eyebolts are clipped into the connections by pushing the red button on top. Four lock balls in the shaft securing the connection as soon as the eyebolt is under tension. Press the red push-buttons to remove the eyebolts. To do so, the eyebolts are not allowed to be under tension.

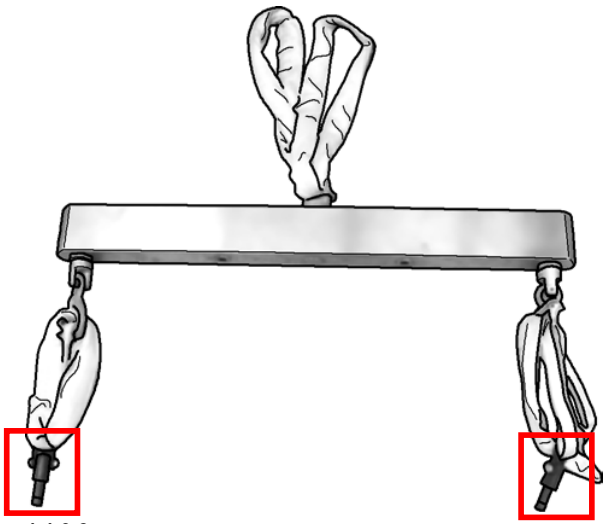

4.4.9.3

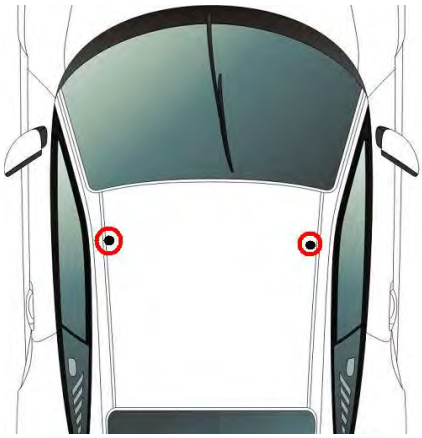

4.4.9.5

4.4.9.1

4.4.9.2

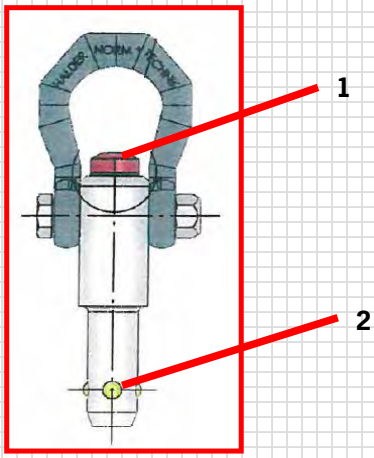

4.4.9.4

1. Push-button
2. Lock ball

Downloaded from www.Manualslib.com manuals search engine

4.5 Aerodynamics

4.5.1 General

Compared to the previous models, the new 911 GT3 Cup (991) has been significantly improved in terms of its aerodynamic performance.

4.5.2 Rear wing

The rear wing is 1,800 mm (5'11") wide and adjustable in nine steps; its support brackets are directly attached to the body.

4.5.3 Additional aerodynamic improvements

Further aerodynamic improvements were made by implementing the following measures:

- Improved cooling air circulation by optimizing air intake and outlet cross sections
- Improved brake cooling due to optimized brake air spoiler
- Aerodynamically optimized exterior mirrors
- Optimized underbody paneling (fully closed)
- Improved flow performance at the front wheels due to optimized inflow frames

Downloaded from www.Manualslib.com manuals search engine

4.6 Exterior mirrors

The streamlined design of the exterior mirrors benefit the aerodynamics. Electric mirror adjustment and mirror heating are not installed.

4.7 Roof

The roof skin is made of aluminum sheet and connected to the body via a bonded joint. A rescue opening made of CFRP that may be released by camlock bolts is provided above the driver's seat. It is much easier to insert the KED system for stabilizing the driver using the rescue opening.

Downloaded from www.Manualslib.com manuals search engine

4.8 Air jack system

The air jack system is supplied by Krontec. The vehicle has three lifting jacks, one in the middle of the front section and two in the area of the B-pillars, firmly attached to the body. The lifting jacks are not adjustable for height and must not be adjusted to a ride height change. The compressed air supply valve is installed in the area of the passenger's B-pillar (rear side window). The maximum working pressure is about 35-38 bar (508-551 psi).

Important notes

WARNING

Never work below the vehicle lifted with the air jack system without protecting it against accidental lowering.

WARNING

Never open the air jack. The system is under pressure even in the retracted position!

NOTE

To prevent damage to the air jack end stops, never let the air jacks extend freely (i.e. without vehicle load).

Downloaded from www.Manualslib.com manuals search engine

Further notes

- While driving, the drain valve (4.8.1) should be open (pulled out) to ensure that the air jacks are completely retracted.
- A separate vent is accessible via a tappet in the drain valve for slowly lowering a lifted vehicle. By pressing this tappet, the pneumatic system can be vented in a controlled manner.
- Never use mineral oil-based cleaning agents.
- Porsche Motorsport recommends having an overhaul carried out by Krontec after two years or 2,000 lifts.
- Check the tightening torque of the grooved nut (air jack tightness) during normal vehicle checks.

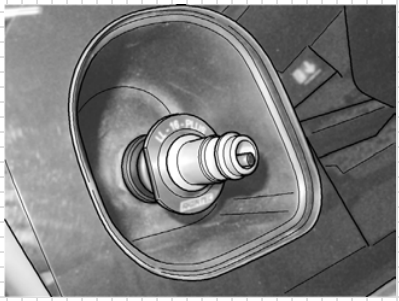

4.8.1

Tightening torque grooved nut, rear 45 ± 5 Nm (33 ± 3.7 ft-lb)

Tightening torque grooved nut, front 45 ± 5 Nm (33 ± 3.7 ft-lb)

Position of the rear air jack in the mounting tube (4.8.2)

If a loose or improperly mounted air jack is detected, it must be replaced immediately as internal damage cannot be excluded.

For further safety regulations, please refer to the manufacturer's product description (Krontec) addition 6.

KRONTEC
Maschinenbau GmbH
Pommernstraße 33
93073 Neutraubling
www.krontec.de

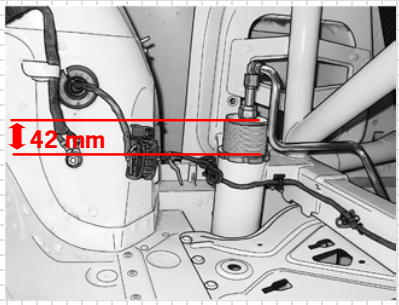

4.8.2

Downloaded from www.Manualslib.com manuals search engine

4.9 Doors

To further reduce vehicle weight, the doors are made of CFRP.

4.10 Trunk and engine lid

WARNING

Greatest care should be taken when closing the quick releases (4.10.2.1) of the trunk and engine lids. The lid pins must be inserted and locked (4.10.2.1). There is a risk that the hood or trunk lid might accidentally open when driving and tear off!

Gas pressure springs are mounted on trunk and engine lids.

4.10.1 Trunk lid

The trunk lid is made of aluminum sheet and optimized for the special motorsport requirements. It is provided with NACA intakes on the left and right providing air supply to the interior. The lid is closed by two lid pins.

4.10.2 Engine lid

The engine lid is made of carbon fiber reinforced plastic (CFRP) and is connected by two hinges to the body. Opening is supported by a gas pressure spring so that work can be carried out with the lid open without requiring additional support. As with the front trunk lid, two lid pins are used as a lock.

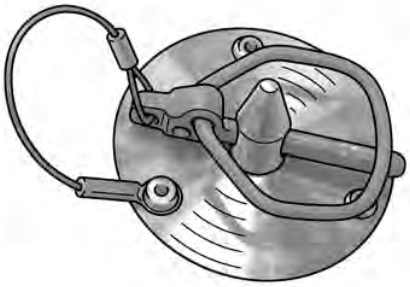

4.10.2.1

Downloaded from www.Manualslib.com manuals search engine

4.11 Windows

The front window is made of laminated safety glass and glued to the body; the rear side windows and rear windows are made of PC (polycarbonate). The rear side windows are removable and are clipped into the frame by means of ball heads. The rear window is glued. When replacing the rear window, the new part's adhesive surface should be roughened.

4.11.1 Installing and removing the windshield

Tools

Designation	Item No.
Electric special cutter – Fein	ASE 481 202 00 000
Suction lifter – Stahlwille	ASE 481 161 00 000
Double cartridge gun VAS 5237	ASE 416 161 00 000
Cut system for glued panes - VAS 6452	ASE 481 261 01 000

The tools can be ordered at your Porsche Center. As an alternative for the cut system VAS 6452 (4.11.1.1), KSA Toolsystems offer a cutting device "Single Cut System" (4.11.1.2). The two systems differ. VAS 5237 uses a wire for cutting, the Single Cut System a polyethylene cord. The manual describes cutting with the VAS 6452, but the procedure with the KSA system is identical.

Consumables

Designation	Item No.
Gluing set	000 043 301 14
Cord	000 043 300 96
Wire for (VAS)	000 043 303 32

4.11.1.1

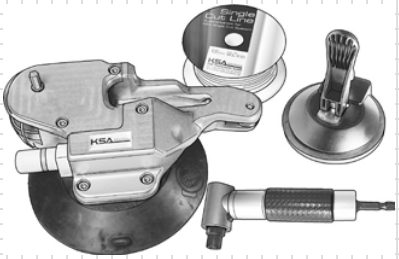

4.11.1.2

Downloaded from www.Manualslib.com manuals search engine

Preparation

1. Remove the windshield wiper arm
2. Remove the interior rear-view mirror

WARNING

- Improper installation and removal of vehicle windows may cause cuts and (eye) injuries
- Wear your personal protective equipment
- Only change cutting blades when the power supply is disconnected

NOTE

Wetting the suction cup increases the fixing force.

3. Install the Stahlwille WE1140 suction lifter on the outside of the windshield
4. Unwind the cutting wire and cut it with a side cutter, length 6 m (19.7')

Downloaded from www.Manualslib.com manuals search engine

NOTE

The cutting cord has to be below the window edge, as otherwise the seal will be damaged.

5. Insert the cutting wire into the window gap, WE1480 cutting system for glued windows - VAS 6452.
   - Wet the windshield sealing (1) with soapy water on the entire circumference.
   - Pull the cutting wire (2) into the gap between windshield and body (note the arrows) on the entire circumference.
   - Clamp the free end of the cutting wire to the wiper mechanics. Introduce the cutting wire.

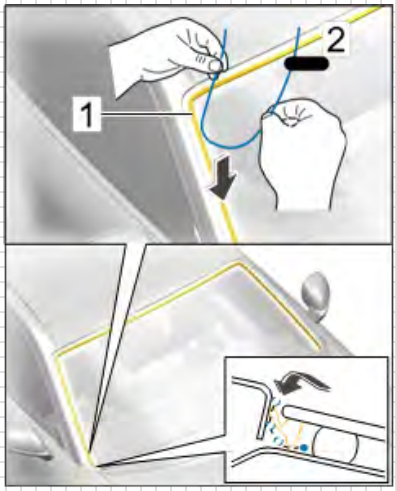

4.11.1.3

6. Pull the cutting wire through to the inside.
   - Cut adhesive bead from the inside to the outside using piercing awl (1) arrow A.
   - Insert cutting wire (2) into the piercing awl and pull it into the interior arrow B.
   - Pull the cutting wire through to the inside. Length: Insert 1 m (3'3.4") cutting wire.

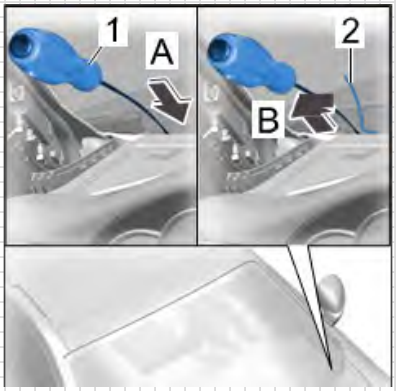

4.11.1.4

NOTE

It is recommended to clean the windshield before installation in order to ensure optimum adhesion of the suction cups.

Downloaded from www.Manualslib.com manuals search engine

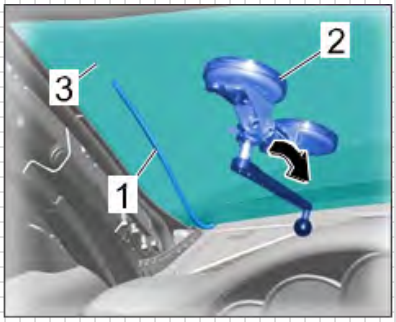

4.11.1.5

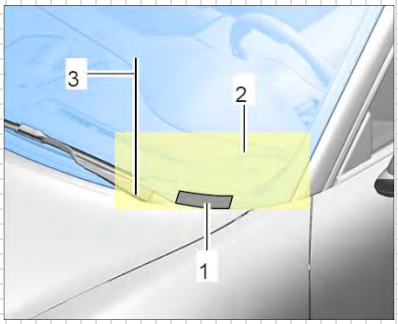

4.11.1.6

7. Cut out the windshield.
   - Introduce the cutting wire (1) in the hole of the rewinding device (2).
   - Align the rewinding device (2) in the window center and press the suction lifter firmly against the windshield (3).
   - Fix the suction lifter on the windshield by moving the operating lever.

NOTE

To avoid damage, insert the protective film (2) supplied with the cutting system between windshield and vehicle ID-number (1).

When cutting, lead the cutting wire (3) over the protective film.

Removing the windshield

8. Cut out the windshield by winding up the cutting wire on the rewinding device in the direction of the arrow.

Move the rewinding device to reduce the cutting wire traction force during glass removal.

9. Remove the windshield.

Downloaded from www.Manualslib.com manuals search engine

4.11.2 Preparing the window cutout for installation

1. Remove glue on the body.

   - Remove residual glue (1) with (electric special cutter) WE1137 electric special cutter Fein and scraper (U shape 639.031.130.22) on the body so that a glue residue remains on the entire area (2).

NOTE

The area-wide glue residue serves as primer for the new glue material. Keep cut surfaces clean and free of grease and do not clean with cleaning solution.

2. Clean and prime paint damages resp. newly built-up paint surfaces in the window cutout of the body.

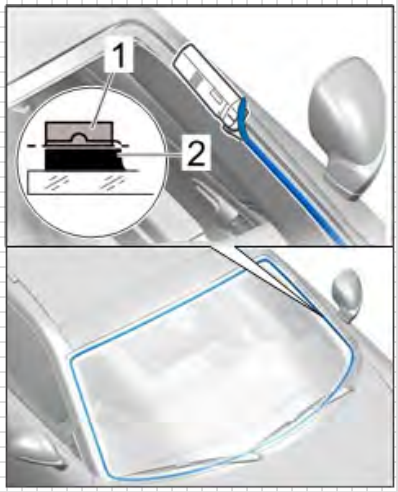

4.11.2.1

NOTE

A flash-off time of at least 10 minutes should be observed between cleaning of the gluing surface and application of the primer! The body must be free of any cleaning solution residues.

   - Clean and activate the gluing surface of the window cutout.

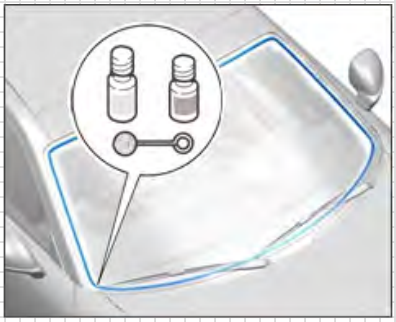
4.11.2.2

Downloaded from www.Manualslib.com manuals search engine

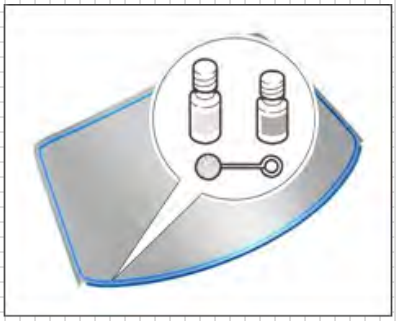

4.11.3.1

4.11.3 Preparing the windshield for installation

(new windshield)

1. Clean and prime the gluing surface.

   - Clean the window with cleaning solution.
   - Apply primer on the window flange around the marking.

NOTE

A flash-off time of at least 10 minutes should be observed between cleaning the window and application of the primer! The window must be free of any cleaning solution residues.

Downloaded from www.Manualslib.com manuals search engine

4.11.4 Installing the windshield

CAUTION

Risk of material damage if the predetermined curing time of the glue is not observed! In order to ensure proper bonding, the following conditions have to be met:

- Do not put the vehicle into operation before the end of the curing time!
- Curing time: two hours
- Temperature: at least 10 °C (50 °F)
- Fixing time: about one hour

NOTE

The glue material has an open time of 15 minutes. This means that the glue should be applied and the part be joined within this time.

To ensure complete mixing, squeeze an approx. 30 mm (1.2") long adhesive bead of fresh material on a piece of cardboard.

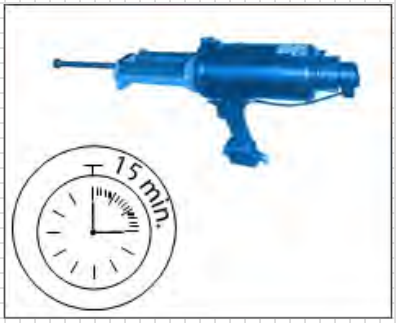

4.11.4.1

NOTE

- Check the depth stops.
- Replace damaged or missing depth stops.

1. Prepare two-component glue for processing.

Downloaded from www.Manualslib.com manuals search engine

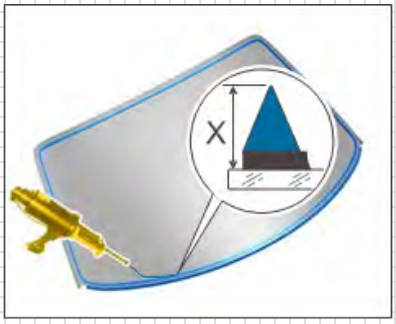

4.11.4.2

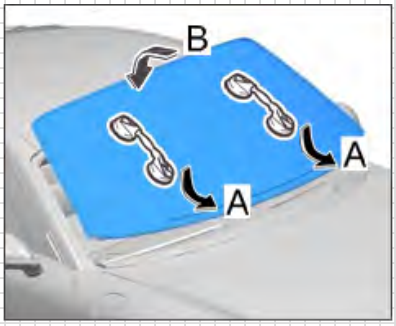

4.11.4.3

NOTE

When applying the glue material, make sure that the adhesive bead overlaps by approx. 30 mm (1.2”) at the beginning and end.

2. Apply glue on the windshield using the double cartridge gun VAS 5237.
   - Use the glue gun and apply two-component glue on the windshield along the pre-coating or on the primer in form of a triangular adhesive bead with dimension (X) application height: 15 mm (0.6”).

NOTE

Two persons are required to insert position and fix the windshield!

3. Install the windshield in the body.
   - Place the suction lifter on the windshield.
   - Insert the windshield into the window cutout.
   - Position the windshield at the bottom edge (arrows A) and tilt it down into the frame (arrow B)

Downloaded from www.Manualslib.com manuals search engine

4. Set the windshield gap dimension.

   - Move the windshield to set gap dimension (X). Gap dimension: **3.0 mm** (0.12“) on the entire circumference.
   - Remove the suction lifter.

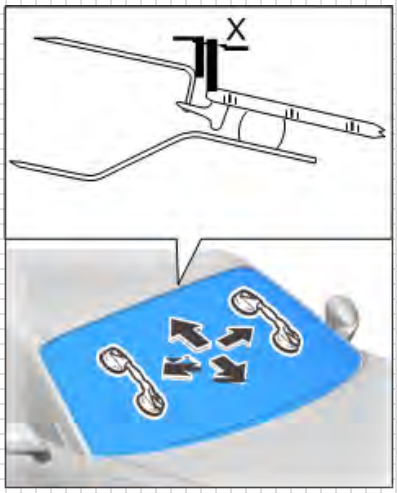

4.11.4.4

   - Secure the windshield with adhesive tape (1) to prevent it from slipping.

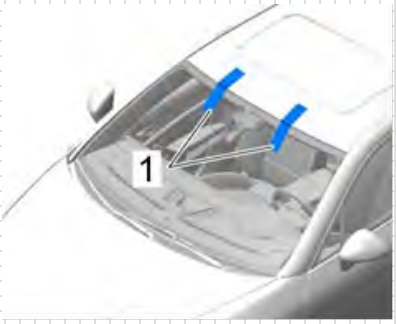

4.11.4.5

5. Clean the vision areas.

   - Immediately remove the glue that has oozed out and clean the respective vision areas with cleaning solution.

6. Mount the interior rear-view mirror.

4.12 Fenders

The fenders are made of aluminum sheet and screwed on with bolted connections to the body. The wheel arch liner integrates a stone guard, protecting the side radiators against possible damage by stones and rubber abrasions. Removable separation edges are mounted at the wheel arch.

4.13 Wheel cover

The wheel covers are made of PU (polyurethane). They are bolted and glued to the body and can be replaced.

Downloaded from www.Manualslib.com manuals search engine

4.14 Fuel system

A FT3 safety fuel tank (100 liters (26.4 gal) with return-free fuel system is used in the 911 GT3 Cup (991). The tank consists of a fuel cell which provides maximum safety and meets the current FIA standard, and a protective shell made of carbon. The tank integrates two fuel pumps. The main pump is surrounded by fuel baffles with one-way valves, witch collect the fuel around the main pump. The pumps supply the fuel via a pressure regulator (5 bar/72.5 psi) to the fuel gallery on the engine side. From there, the fuel is delivered via the main pump to the injection valves. Defueling takes place via a defueling coupling. Underneath the tank, there is an underride guard that protects the tank against impacts from the bottom. The fueling system (4.14.1) can be obtained at the company Sobek. Contact address, see chapter 7.9.

4.14.1

The following components are installed:

1 Level indicator
2 Roll-over valve
3 Defueling coupling
4 Fuel pressure regulator
5 Fuel pump
6 Fuel cut off valve
7 Pre fuel pump
8 Catch tank

Function of the FIA Roll Over Valve

The valve is allocated in the breather line. It fulfills three functions:

Closing of the breather line in case of a roll-over.

Over pressure safety function; in case of a roll over, the valve opens at a over pressure of 200 mbar compared to ambient pressure to prevent the fuel cell from damage caused by too high over pressure.

Float valve to close the valve when gasoline exits through the breather line.

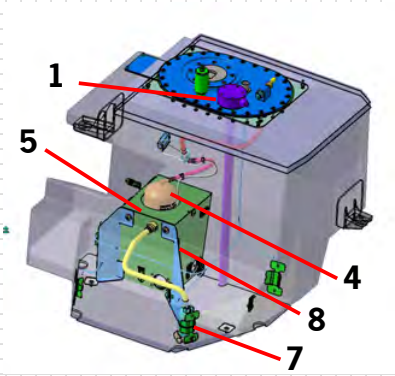

4.14.3

Function of the fuel cut off valve

The fuel cut off valve is a safety valve to protect from gasoline leakage with damaged gasoline lines. The valve closes the gasoline support line in case of a leakage.

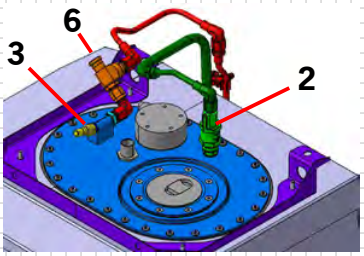

4.14.2

Downloaded from www.Manualslib.com manuals search engine

4.14.1 Fuel

Superplus unleaded (at least 98 ROZ)

The ethanol content in the fuel may not exceed 26 % (E26).

4.14.2 Defueling

A defueling valve is installed to empty the fuel tank. To start the procedure, the fuel pump switch located in the central console must be in position "Fuel Pump Service". The fuel pump is then activated for 120 seconds. If this time is not sufficient to completely drain the fuel tank, the switch has to be set again from the center position (fuel pump off) to "Service". Keep the fuel only in suitable containers! The switch Intank Pump Service has no function.

Switching logic of the fuel pump switches (center console):

Switch position	up	Defueling mode
Switch position	center	Off
Switch position	down	Normal mode

4.14.2.1

NOTE

The fuel pump should not run dry as this may cause damage to the pump.

DANGER

Danger – risk of fire and explosion!

Fuel may evaporate into the air!

- No smoking!
- Identify safety area

Downloaded from www.Manualslib.com manuals search engine

4.14.3 Tank installation

A steel underride protection is provided beneath the tank, protecting it against external impacts.

Part	Item	Dimensions	Tightening torque in Nm
Hexagon nut	1	M6	10 Nm (7.4 ft-lb)
Combi SHR	2	M8X40	20 Nm (14.75 ft-lb)
Hexagon nut	3	M6	10 Nm (7.4 ft-lb)

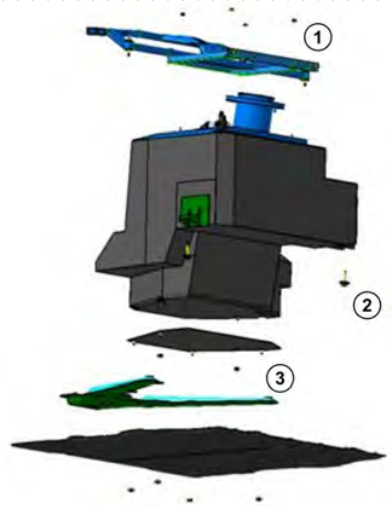

4.14.3.1

4.15 Repairing the body

Because of its hybrid design, it is absolutely essential to check the body in case of an accident. The body of the new 911 GT3 Cup (991) is an aluminum steel hybrid construction. This design allows extensive repair work within a defined amount of time. For this purpose, a special tool kit, suitable body spare parts as well as tools and consumables are available.

Safety measures

Always wear the indicated protective equipment to prevent injuries caused by heat or flying debris.

- Goggles
- Safety shoes
- Protective gloves
- Hearing protection

4.15.1

Downloaded from www.Manualslib.com manuals search engine

4.15.1 Repairing the front section

A tool kit has been set up especially for performing repair work on the aluminum parts. The tool kit may only be used on aluminum parts.

Required tools by Wieländer+Schill

Description	Item No.	Qty
Body saw WPS 2010 230V	120020	1
W+S special central punch F2 (for self-pierce rivets)	628006	2
Slide hammer with hook 5 kg	511300	1
Dead blow bumping hammer	511029	1
Separating chisel incl. handle, body	512001	1
Anvil dolly, half-round	511113	1
File with grip, medium cut 1	521201	1
Manual deburrer	541030	1
Spare blade for manual deburrer	547030	1
Teroson spatula	541010	1
Circular brush, stainless steel ø 75 mm knotted	541202	2
Wire brush, V-shape INOX	541212	1
Mity-Bite clip, large	511312	1
Grip pliers 145 U-format 12"	561151	2
Grip pliers 144	561152	2
Fastener ø 6.35mm 20 pcs	577107	1
Cartridge gun 3M EPX for 50 ml.	831101	1
Blind riveting tool Taurus 4	571110	1
Pressure reduction valve PLF80/90/PS1/Taurus4	194000	1
Reduction nipple long: G 1/8" axG 1/4" i	194001	1

Downloaded from www.Manualslib.com manuals search engine

Consumables		
Solid carbide drill ø 6.7 mm	627010	
3M 2K glue DP 490 (Porsche)	999.915.323.40	
Blind rivet (long) 5.0-8.5 (Porsche)	999.190.230	
Blind rivet (short) 3.0-6.5 (Porsche)	999.190.227.01	

Wieländer + Schill
Siederstr. 50
78054 Villingen-Schwenningen
Phone: +49 (0)7720-83 17 0
E-Mail: info@wielanderschill.com

Downloaded from www.Manualslib.com manuals search engine

HAZET

Designation	Item No.	Qty
Tool trolley	179-6-RAL 4000896148851	1
Door RAL 9006	179-21 4000896146246	1
Can holder	179-35 4000896141074	2
Attachable box	179-28 400089141234	1
Paper roll holder	180-34 4000896120840	1
Set of separating plates	173-31/5 4000896090150	2
Set of separating plates	173-32/5 400089120796	2
Cable drum	161-3D 4000896048878	1
Anti-slip mat	180-38 400089120819	6
Flat scraper	824 4000896033881	1
Heat gun	1990-2/6 4000896141586	1
Wire brush	2130-1 4000896012527	2
Ball-peen hammer	2140-5 4000896012695	1
Magnetic finder	1976-1 4000896009749	1
Replacement heads	1953-050 4000896008612	1
Drill	9030-1 4000896109470	1
Angle drill	9030-5 4000896132379	1
Keyhole saw	9034-1 4000896132362	1
Grinder, straight	9032-1 4000896117055	1
Grinder, bent	9032-5 4000896117062	1

HAZET-WERK
Postfach 100461
42804 Remscheid
Phone: +49 (0)2191-79 23 75
E-Mail: info@hazet.de

Downloaded from www.Manualslib.com manuals search engine

Preparation for repairing the front section

These instructions describe how to repair the front section. Individual operations are shown on one side and have to be carried out inversely on the other side. In case of deviations, the steps are described separately. The estimated time for the described repair is approximately five hours.

Remove the following parts:

- Fender left/right
- Headlights left/right
- Wheel arch liners left/right
- Underbody, front
- Chassis left/right
- Front apron
- Front bumper
- Fuel tank
- Brake lines left
- Draining the coolant, front
- Water cooler and cooling hoses left/right
- Steering gear
- Air jack, front and cross member
- Master cylinder, remove if required

Downloaded from www.Manualslib.com manuals search engine

Removing the front section

The front section (Z front section Cup) is available as spare part. Porsche spare part number: 991.501.991.8A

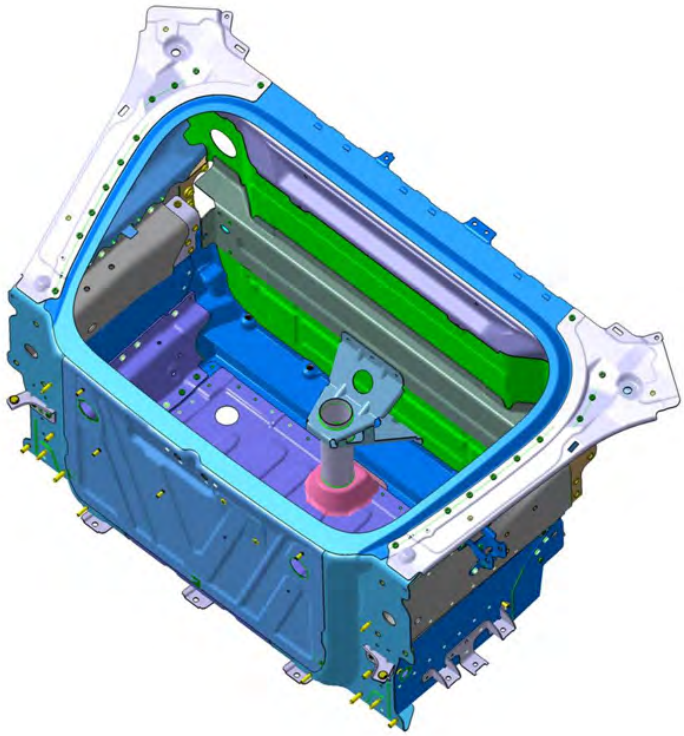

4.15.1.1

Together with the front section are consumables such as glue and blind rivets.

Where possible, drill out the self-pierce rivets (1) from the rivets head.

To do this deeply mark the rivets (1) with a center punch and drill using a solid carbide drill (Ø 6.7 mm).

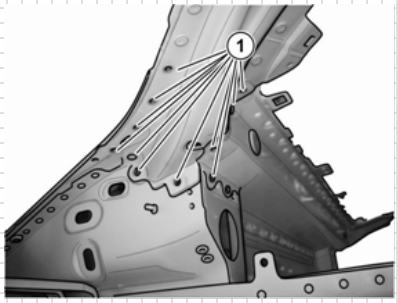

4.15.1.2

Downloaded from www.Manualslib.com manuals search engine

Heat the glued joint (2) with the heating gun and pry apart the sheet to the top using a separating chisel.

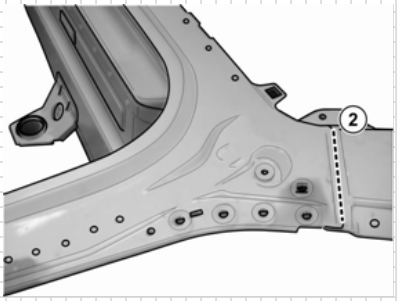

4.15.1.3

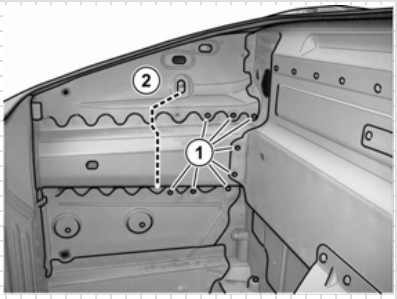

4.15.1.4

Bore the marked rivets (1) only through the first sheet. Aluminum extruded sections are in the carrier frame. The aluminum profile is behind the saw line (2). This cut allows removing the front section, a more precise cut will follow in a later step.

Do not bore through the carrier frame. The carrier frame is not replaced now.

If the carrier is damaged behind the cutoff line (2), it is not possible to carry out the repair work.

Downloaded from www.Manualslib.com manuals search engine

The illustration shows the saw line on the right outside.

Cut through the carrier frame at the line (1) using the electric saw (saw blade 14). Starting from the center of the oval cutout, carry out the separation cut directly behind the two threads.

Heat glued joints along the pierced rivets using a heat gun.

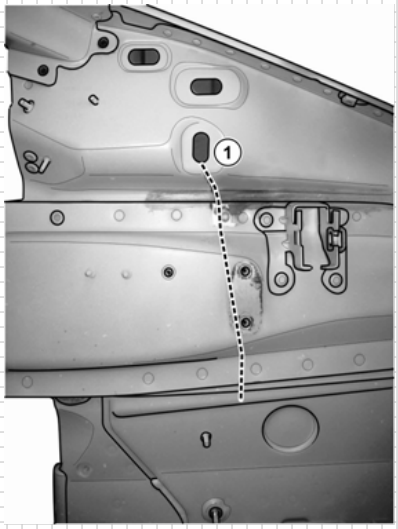

4.15.1.5

The illustration shows the left side, with the arrow pointing in the direction of travel.

Drill out the three rivets (1).

Do not drill into the carrier.

Separate the sheet's glued joints using a separating chisel. Where necessary, heat the glued joint using a hot air blower.

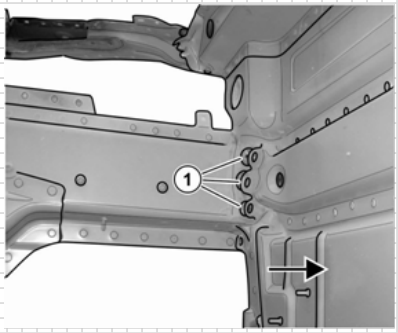

4.15.1.6

Downloaded from www.Manualslib.com manuals search engine

Together with a second person, remove the front section towards the front of the vehicle, using the slide hammer with hook if necessary.

The illustration shows the cut off front section from the right.

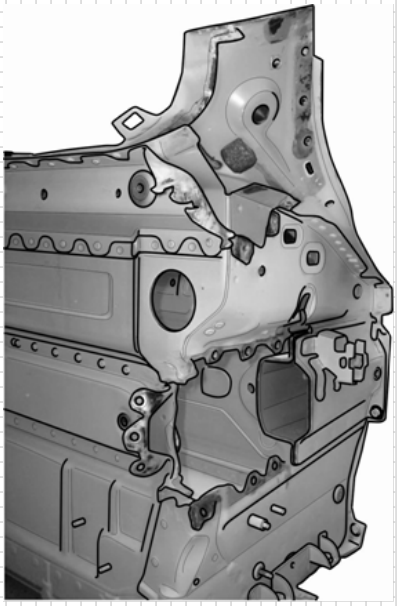

4.15.1.7

Adapting carrier frame to new part

Carry out grinding operations using a stainless steel wire brush. Always use special grinding wheels for grinding aluminum. Use grinding wheels with grain size P80 to P200. Observe corrosion protection measures.

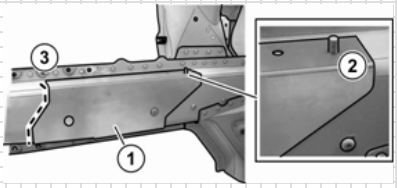

4.15.1.8

Sawing template, right

Place the sawing template (1) on the carrier frame. The threaded bolt (2) is used as fixing. Transfer the saw line (3) on the template's front end onto the carrier from the top to the bottom.

Downloaded from www.Manualslib.com manuals search engine

Sawing template, left

The three threaded holes (1) are used as fixing point.

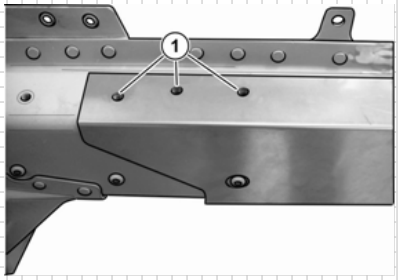

4.15.1.9

Transfer the saw line (1) on the template's front end onto the carrier from the top to the bottom and align centrally to the rivet hole.

The saw cut is described for the right carrier frame.

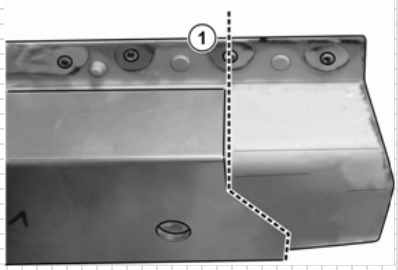

4.15.1.10

The distance from the rear end to the saw line is 511 mm (20.12") (measure from inner side of the carrier).

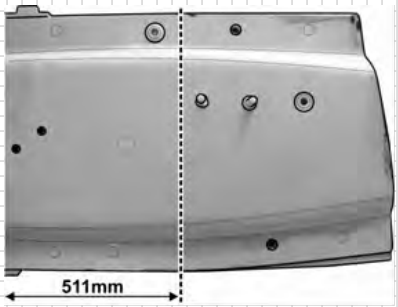

4.15.1.11

NOTE The external saw cut only cuts through the outer sheet.

Downloaded from www.Manualslib.com manuals search engine

Heat the upper section (hatched) of the two carrier sheets and open with the separating chisel.

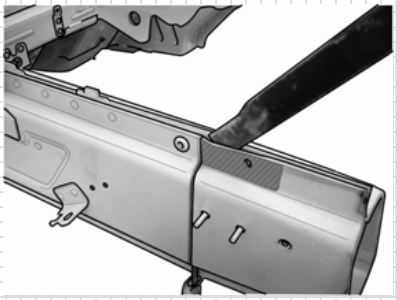

4.15.1.12

Carry out the inner saw cut (hatched)

A = outer sheet

B = inner sheet

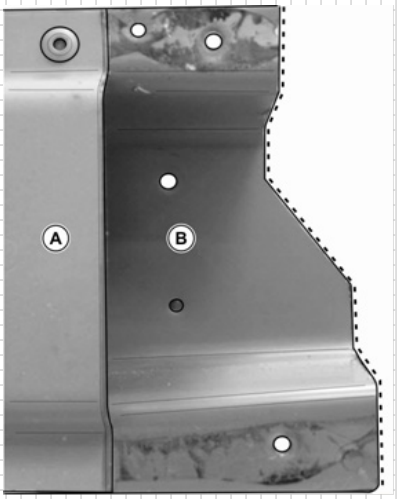

4.15.1.13

Saw the carrier upper section (1).

Remove glue residues in the hatched area.

Remove the burr on the saw line.

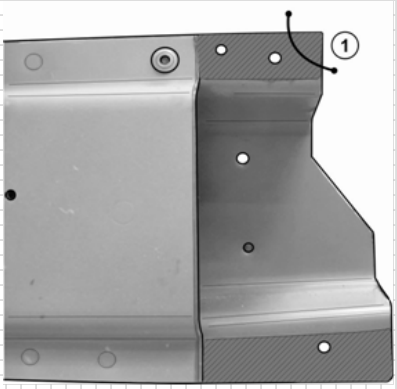

4.15.1.14

Downloaded from www.Manualslib.com manuals search engine

The illustration shows the new part's right outside.

The new part is riveted to the old carrier frame. Item (1) shows where the holes for the rivets have to be provided.

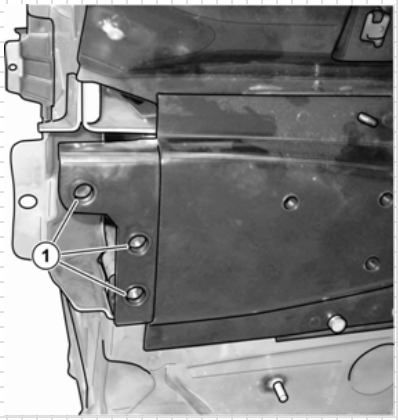

4.15.1.15

The illustration shows the right carrier from the inside.

Transfer the three holes onto the old carrier stub (1). Diameter 6.7 mm (0.26").

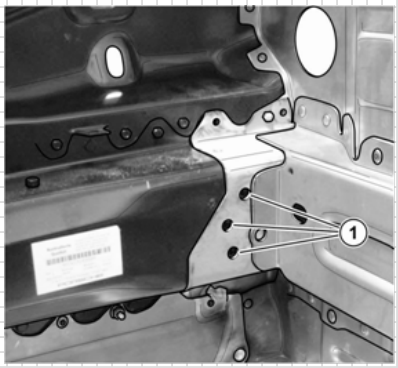

4.15.1.16

The illustration shows the right side

Saw the new front section's upper part (1) (hatched) on the left and right (2).

In this way, it can be placed more easily into the body.

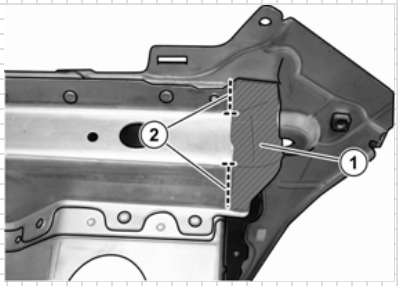

4.15.1.17

Downloaded from www.Manualslib.com manuals search engine

Mounting the new part

The bottom cross member and the rivets at the upper end next to the strut dome are used for positioning.

All surfaces that are riveted have also to be bonded with two-component glue.

Place and rivet the blind rivets connecting the new part to the body.

NOTE

Make sure that two different rivet lengths are available.

Rivet connections through two sheets:
short rivets 3.0-6.5

Rivet connections through three sheets:
long rivets 5.0-8.5

The riveting points are shown below

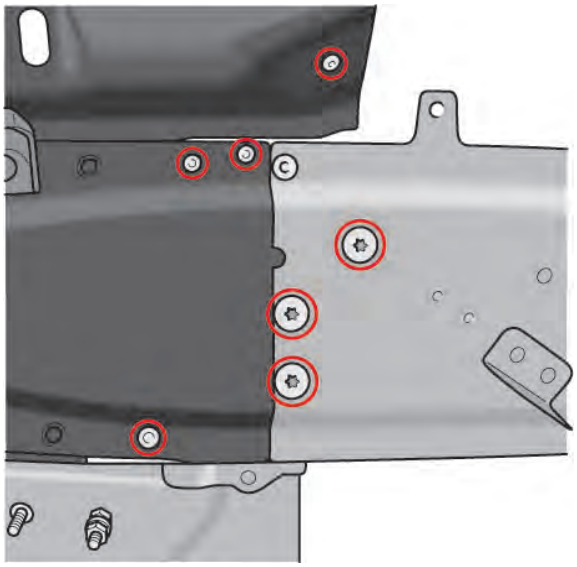

4.15.1.18

Downloaded from www.Manualslib.com manuals search engine

The illustration shows the new front section and the old carrier stub

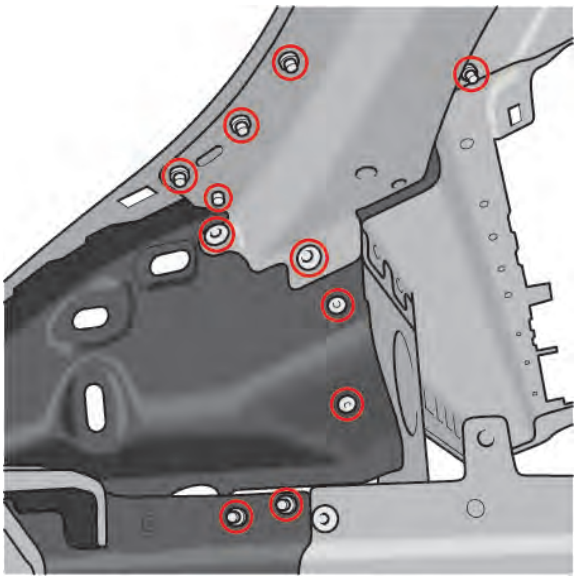

4.15.1.19

The illustration shows the front section on the left side

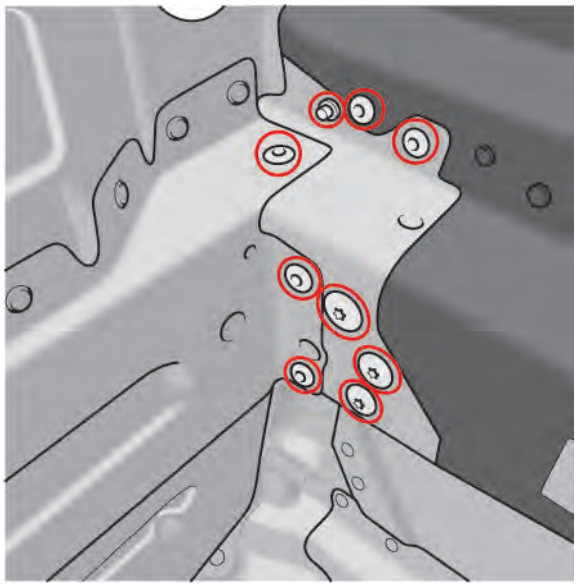

4.15.1.20

The illustration shows left inside of the front section

Downloaded from www.Manualslib.com manuals search engine

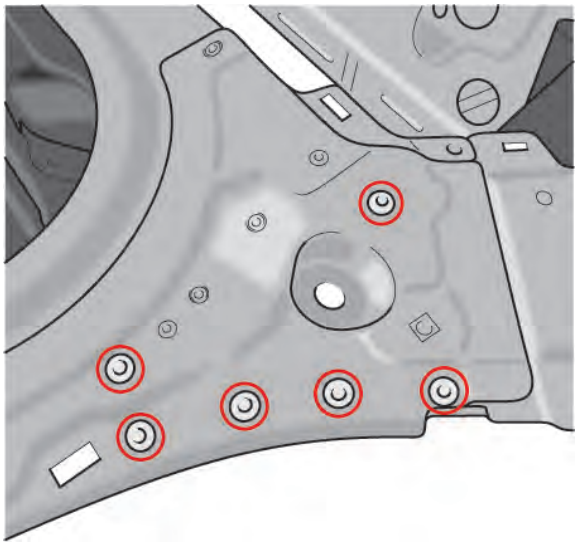

4.15.1.21

The illustration shows the front section from the top, near the strut dome

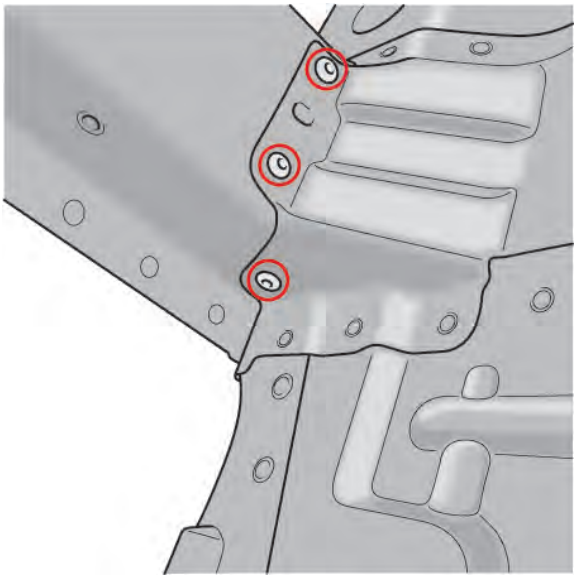

4.15.1.22

The illustration shows the front section's left rear panel from below

Downloaded from www.Manualslib.com manuals search engine

4.15.2 Replacing the front strut mount

Safety measures

Always wear the indicated protective equipment to prevent injuries caused by heat or flying debris.

- Goggles
- Safety shoes
- Protective gloves
- Hearing protection

4.15.2.1

Downloaded from www.Manualslib.com manuals search engine

Required tools by Wieländer+Schill

Designation	Item No.	Qty
Body saw WPS 2010 230 V	120020	1
W+S special central punch F2 (for self-pierce rivets)	628006	2
Slide hammer with hook 5 kg	511300	1
Dead blow bumping hammer	511029	1
Separating chisel incl. handle, body	512001	1
Anvil dolly, half-round	511113	1
File with grip, medium cut 1	521201	1
Manual deburrer	541030	1
Spare blade for manual deburrer	547030	1
Teroson spatula	541010	1
Circular brush, stainless steel ø 75 mm knotted	541202	2
Wire brush, V-shape INOX	541212	1
Mity-Bite clip, large	511312	1
Grip pliers 145 U-format 12"	561151	2
Grip pliers 144	561152	2
Fastener ø 6.35 mm 20 pcs	577107	1
Cartridge gun 3M EPX for 50 ml.	831101	1
Blind riveting tool Taurus 4	571110	1
Pressure reduction valve PLF80/90/PS1/Taurus4	194000	1
Reduction nipple long: G 1/8" axG 1/4" i	194001	1

Downloaded from www.Manualslib.com manuals search engine

Consumables		
Solid carbide drill ø 6.7 mm	627010	
3M 2K glue DP 490 (Porsche)	999.915.323.40	
Blind rivet (long) 5.0-8.5 (Porsche)	999.190.230	
Blind rivet (short) 3.0-6.5 (Porsche)	999.190.227.01	

Wieländer + Schill
Siederstr. 50
78054 Villingen-Schwenningen
Phone: +49 (0)7720-83 17 0
E-Mail: info@wielanderschill.com

Downloaded from www.Manualslib.com manuals search engine

HAZET

Designation	Item No.	Qty
Tool trolley	179-6-RAL 4000896148851	1
Door RAL 9006	179-21 4000896146246	1
Can holder	179-35 4000896141074	2
Attachable box	179-28 400089141234	1
Paper roll holder	180-34 4000896120840	1
Set of separating plates	173-31/5 4000896090150	2
Set of separating plates	173-32/5 400089120796	2
Cable drum	161-3D 4000896048878	1
Anti-slip mat	180-38 400089120819	6
Flat scraper	824 4000896033881	1
Heat gun	1990-2/6 4000896141586	1
Wire brush	2130-1 4000896012527	2
Ball-peen hammer	2140-5 4000896012695	1
Magnetic finder	1976-1 4000896009749	1
Replacement heads	1953-050 4000896008612	1
Drill	9030-1 4000896109470	1
Angle drill	9030-5 4000896132379	1
Keyhole saw	9034-1 4000896132362	1
Grinder, straight	9032-1 4000896117055	1
Grinder, bent	9032-5 4000896117062	1

HAZET-WERK
Postfach 100461
42804 Remscheid
Phone: +49 (0)2191-79 23 75
E-Mail: info@hazet.de

Downloaded from www.Manualslib.com manuals search engine

Preparation for replacing the strut dome

These instructions describe how to remove the left front strut dome. Perform the operations on the right side inversely. The estimated time for the described repair is approximately three hours.

Remove the following parts:

- Fender left
- Headlight left
- Wheel arch liners left
- Underbody, front
- Chassis left
- Front bumper
- Fuel tank
- Brake lines left
- Draining the coolant, front
- Water cooler and cooling hoses left
- Steering gear
- Air jack, front and cross member
- Master cylinder, remove if required

Removing/drilling out the strut dome

The service life of a drill is about 14 to 20 rivets.

Deeply mark the rivets (1) with the center.

Drilling out the rivets from the rear makes the process much easier.

Use drilling fluid to prolong the drill's service life.

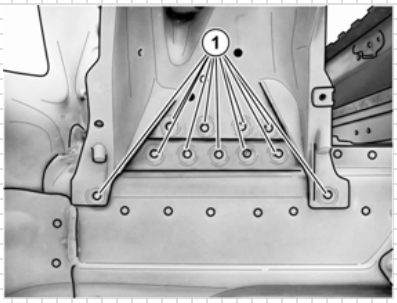

4.15.2.2

Downloaded from www.Manualslib.com manuals search engine

Deeply mark the self-pierce rivets and pierce them using a solid carbide drill (Ø 6.7 mm).

- Saw the defective dome using an air saw (2)
- Pierce the rivet in the direction of the arrow
- Heat the glued joints between dome and body using a hot air blower

Remove the damaged dome.

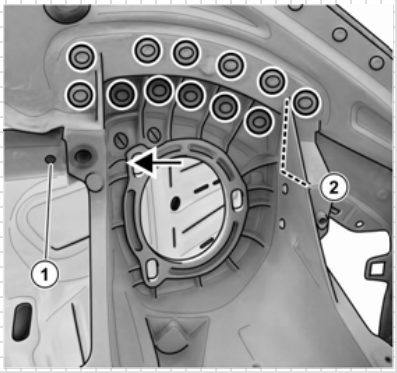

4.15.2.3

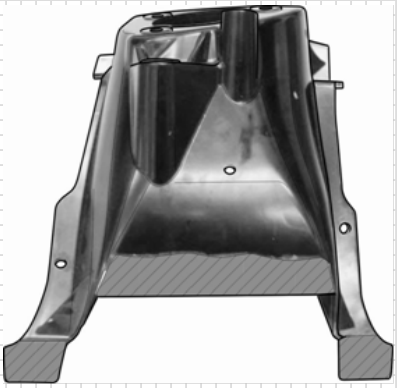
4.15.2.4

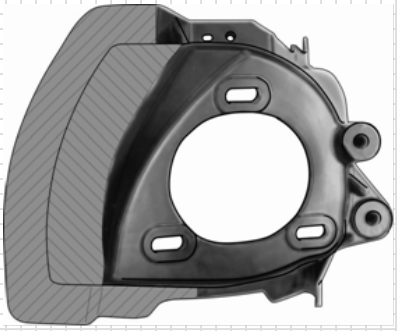
4.15.2.5

Preparation for the installation

Carry out grinding operations using a stainless steel wire brush. Always use special grinding wheels for grinding aluminum. Use grinding wheels with grain size P80 to P200. Observe corrosion protection measures.

Thoroughly remove paint from the glued joints (hatched) using an angle grinder.

Downloaded from www.Manualslib.com manuals search engine

Do not remove the beads on the carrier inside; they are part of the body!

Debur the bore holes on both sides of the body.

Creating a drilling template

Only a drilling template ensures exact positioning of the holes.

Make a drilling template from the defective strut mount. A body air saw is suitable for sawing. Align the drilling template exactly and drill the 7 marked rivet holes.

Then deburr the holes.

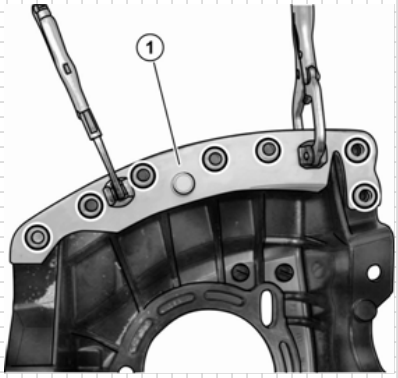

4.15.2.6

Aligning the new part

Grind the gluing surfaces on the new part and on the body down to the bare metal using P100 sandpaper and grease with acetone.

- Apply evenly two-component glue on the new part
- Curing time 2-3 hours at 60 °C (140 °F)
- Install the new part with caution and fix it using fasteners.
- Fit all rivets.

Pay attention to the correct rivet length!

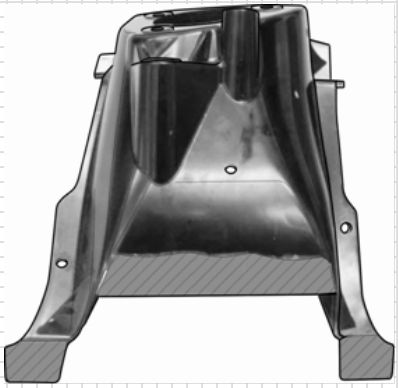

4.15.2.7

4.15.2.8

Downloaded from www.Manualslib.com manuals search engine

Riveting the new part

The hidden row of rivets (1) should be riveted from the bottom, as the row is hidden by the body.

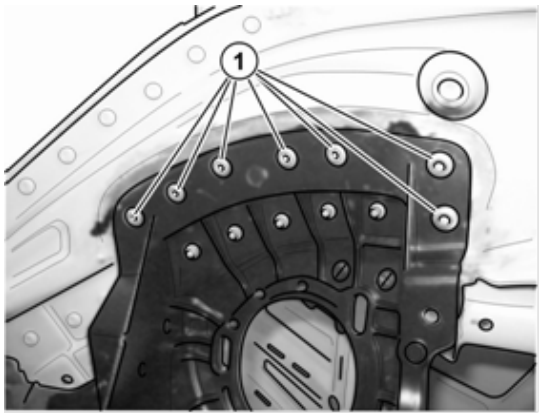

4.15.2.9

Rivet the first row of rivets (1).

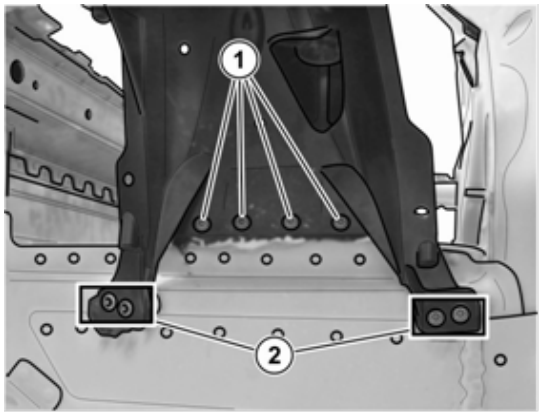

4.15.2.10

Drill the holes for the rivets using a solid carbide drill (Ø 6,7 mm). On the bottom part of the dome, another rivet is fitted in addition to the existing one.

Downloaded from www.Manualslib.com manuals search engine

4.15.3 Repairing the rear end

Required tools (Wieländer & Schill)

DL drill	Item No. 999960
Solid carbide drill, 6.7 mm diameter	Item No. 627010
Ball-peen hammer heavy, 600 gr.	Item No. 999950
Slide hammer with hook 5 Kg	Item No. 511300
Separating chisel incl. handle for body	Item No. 512001
W+S special central punch 2F for self-pierce rivets	Item No. 628006
Taurus 4 blind riveting tool (pneumatic)	Item No. 571110
Cut-off grinder/angle grinder (pneumatic)	
cartridge gun 3M	Item No. 831101
Manual deburrer	Item No. 541030
4 parallel clamps body grip pliers	
Body saw WPS 2010 220V	Item No. 120020
Hot air blower 3000 W	Item No. 801200

Consumable supplies Porsche

Rivets (short) 3.0-6.5	Item No. 999.190.227.01
Rivets (long) 5.0-8.5	Item No. 999.190.230
3M 2K glue DP 490	Item No. 999.915.323.40

Preparation for removing the rear section

Remove bumpers

Remove drive unit

Downloaded from www.Manualslib.com manuals search engine

Removing the rear section

The standard bolts will be replaced by rivets.

Remove the Torx bolts from the carrier frame.

Fit the clamping claw to the carrier frame assembly and knock it loose from the body.

Carry out grinding operations using a stainless steel wire brush. Always use special grinding wheels for grinding aluminum. Use grinding wheels with grain size P80 to P200. Observe corrosion protection measures.

Thoroughly remove paint from the glued joints (hatched).

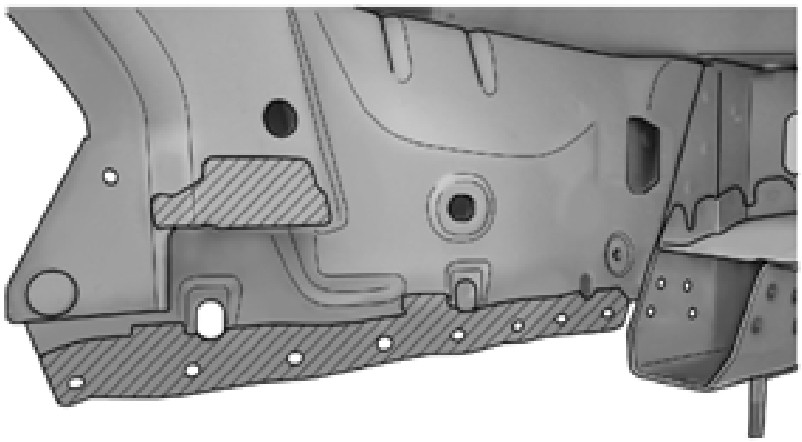

4.15.3.1

Smooth any roughness on the lower rim that occurs during removal.

Downloaded from www.Manualslib.com manuals search engine

Installing the new part

Apply evenly two-component glue on the old bonded joints.

The illustration shows the rivets (1) from the outside on the left. Place the new part, fit the rivets and rivet them.

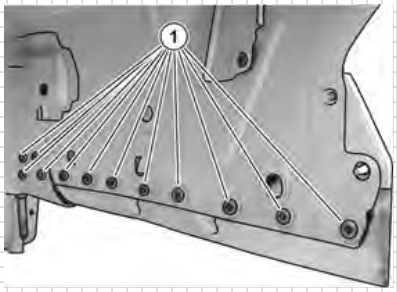

4.15.3.2

The illustration shows the rivets (1) from the inside on the right.

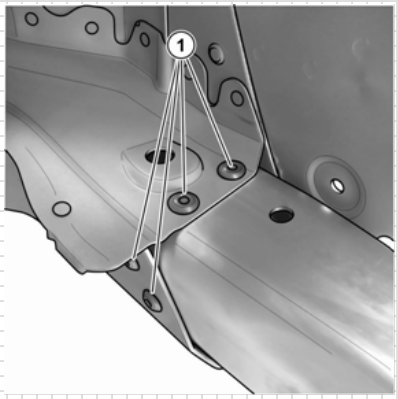

4.15.3.3

The illustration shows the rivets (1) from below on the right.

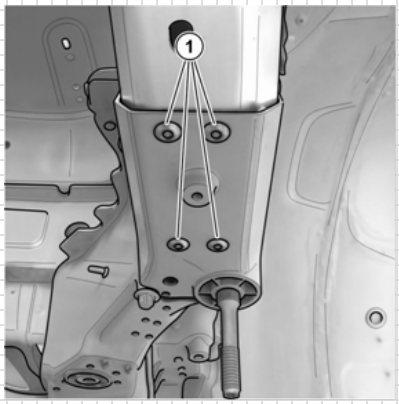

4.15.3.4

Downloaded from www.Manualslib.com manuals search engine

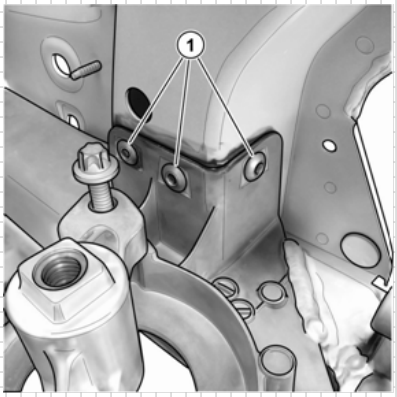

4.15.3.5

The illustration shows the rivets (1) on the rear engine mount (bumper) on the left.

The curing time of two-component glue is 2-3 hours at 60 °C (140 °F).

Downloaded from www.Manualslib.com manuals search engine

4.16 Thread repair kit

The chassis and the assembly carriers are bolted to the aluminum cast parts of the body. To meet these special requirements, the threads are provided with Helicoil threads. A repair kit is available for replacing these Helicoil threads. When opening a bolted connection, it is absolutely necessary to replace the bolt. This also applies to the assembly mounts. If the thread is damaged, replace the thread insert and fit a new Time-Sert thread insert.

NOTE

Defective Helicoil threads of the bolted connections of chassis and assembly carrier have to be replaced by Time-Sert thread inserts. It is not allowed to replace a defective Helicoil thread by a new Helicoil.

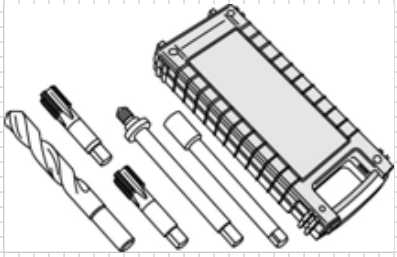

4.16.1

Two systems are available for thread repair. The Helicoil repair system supplied by Böllhoff and Time-Sert thread inserts supplied by Würth. Porsche recommends special thread repair kits for particular thread sizes.

It is important that the corresponding tightening torque of the bolted connection can be achieved after repair.

Downloaded from www.Manualslib.com manuals search engine

Basic method for repairing threads with thread inserts:

1. Remove the defective thread insert
2. Drill a core hole using a special core hole drill
3. Cut a thread using a tap (two-piece/three-piece), use a cutting agent.
4. Insert the new thread insert with a special inserter

Thread repair kits can be ordered at the following companies:

Wilhelm Böllhoff GmbH & Co. KG
Archimedesstr. 1–4
33649 Bielefeld
Germany
Phone: + 49 (0)521-44 82 01
Fax: + 49 (0)521-44 93 64

Adolf Würth GmbH & Co. KG
Reinhold-Würth-Straße 12-17
74653 Künzelsau-Gaisbach
Germany
Phone: +49 (0)7940-15 0
Fax: +49 (0)7940-15 10 00

Downloaded from www.Manualslib.com manuals search engine

4.16.1 Thread repair of chassis bolt connections

Threaded bushings without collar

Tools:

- Hot air blower V.A.G. 1416 (WE1119)
- Thread repair kit 9843
- Thread repair kit 9843/1
- Thread repair kit 9843/2
- Thread repair kit 9843/3
- Time-Sert thread repair No.122-1 Item.1
- Time-Sert thread repair No.122-1 Item.2

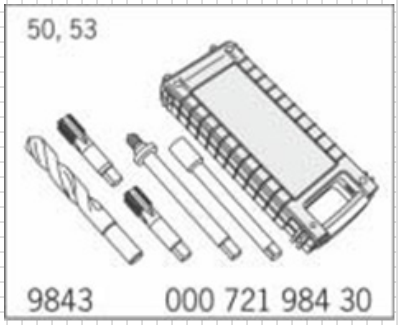

4.16.1.1

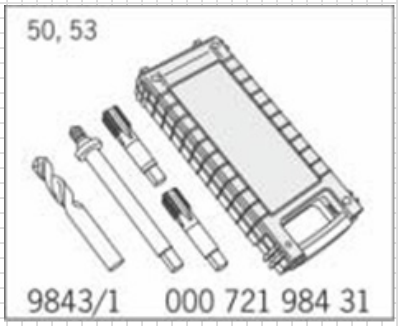

4.16.1.2

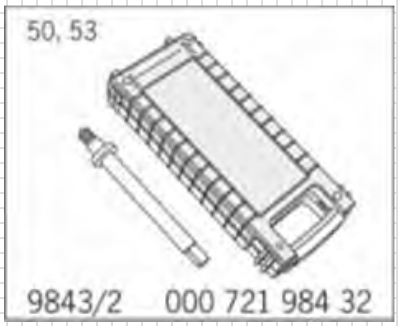

4.16.1.3

4.16.1.4

Downloaded from www.Manualslib.com manuals search engine

Repair of threaded bushings without collar

4.16.1.5

- Remove standard wire thread inserts/Helicoil before drilling
- Release the wire thread insert /Helicoil (1) with a suitable screwdriver

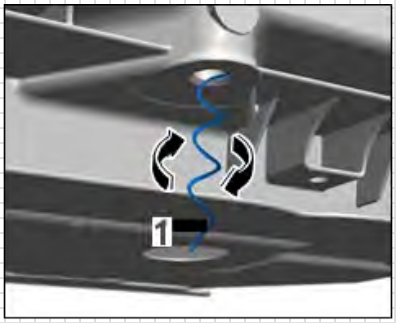

4.16.1.6

- Pull out the wire thread insert/Helicoil (1)

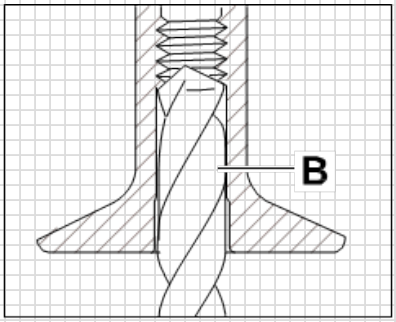

4.16.1.7

- Drill out the old thread completely using a special three-fluted drill (included in the kit) (B)

Downloaded from www.Manualslib.com manuals search engine

Cut the thread to the dimension (Y) with a cutting tool

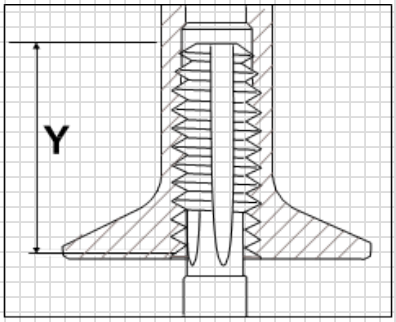

4.16.1.8

- Clean the thread: Blow out chips from the thread with compressed air, flush the thread with brake cleaner, dry the thread with compressed air
- Screw the threaded bushing (1) on the inserter (2)

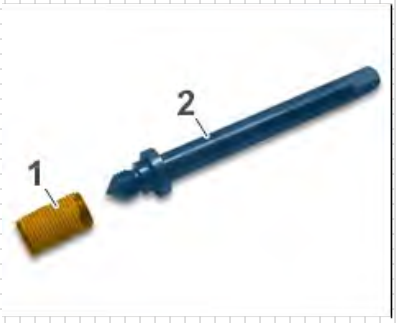

4.16.1.9

- Unscrew the inserter (E) from the threaded bushing (A)

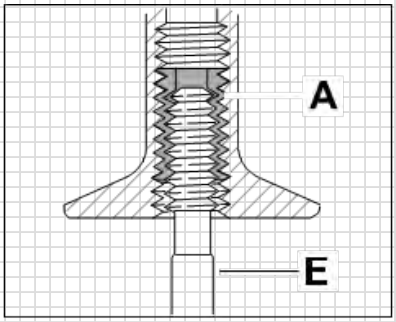

4.16.1.10

Downloaded from www.Manualslib.com manuals search engine

Make sure that the threaded bushing (1) is screwed completely on the inserter (2) – arrows

4.16.1.11

- Insert the threaded bushing (1) completely with the inserter (2)

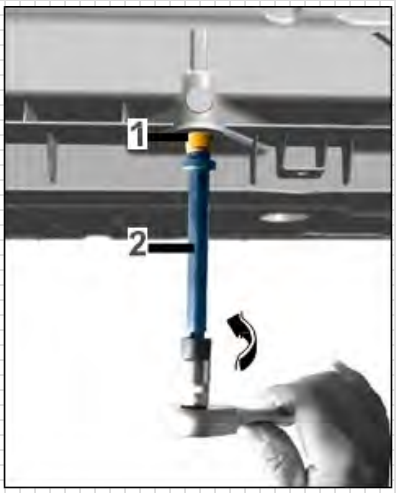

4.16.1.12

- Briefly heat the thread insert with a WE1119 hot air blower, Leister-Electron/V.A.G. 1416. Time: 2 minutes, temperature: 80 °C (176 °F). Alternatively, do not screw the repaired thread for approx. 3-4 hours.

NOTE

The heating or waiting time is required to prevent the thread insert from turning when screwing in the bolt.

Downloaded from www.Manualslib.com manuals search engine

Threaded bushings with collar

- Remove the standard wire thread inserts (Helicoil) before drilling
- Drill out the old thread completely using the drill (included in the kit) (B)

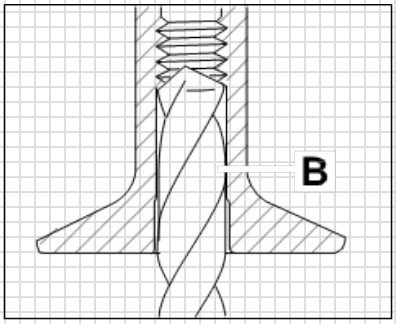

4.16.1.13

The repair bushing has to be fitted more deeply. Use the tool included in the tool kit for milling the appropriate recess

- Mill the recess with the core drill (C)

Use an electronically controlled drill for milling and set a speed of approx. 250 rpm

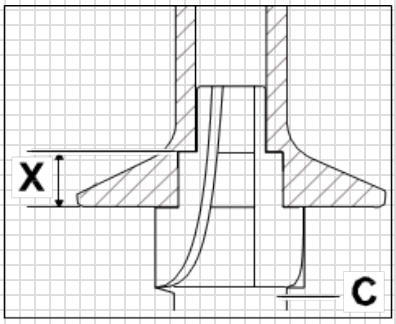

4.16.1.14

Downloaded from www.Manualslib.com manuals search engine

Cut the thread to the dimension (Y) with a cutting tool

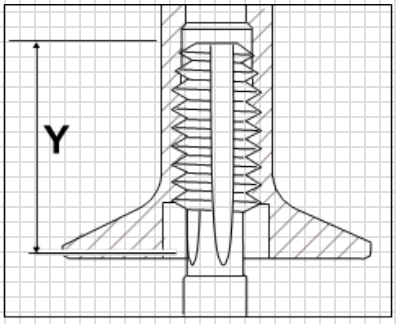

4.16.1.15

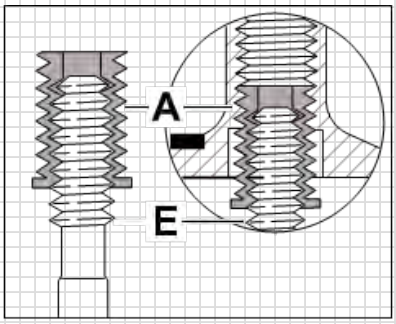

4.16.1.16

- Place the threaded bushing on the inserter
- Oil the inserter (E)
- Manually screw the threaded bushing (A) on the inserter (E)

During press fitting in the basic thread, forming the internal thread requires perceptibly more force on the inserter. Press fitting is completed as soon as the inserter turns again more easily.

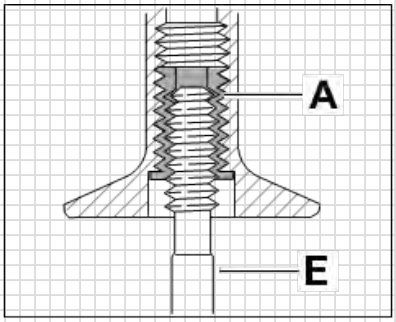

4.16.1.17

Unscrew the inserter (E) from the threaded bushing.

Downloaded from www.Manualslib.com manuals search engine

Repair positions – overview

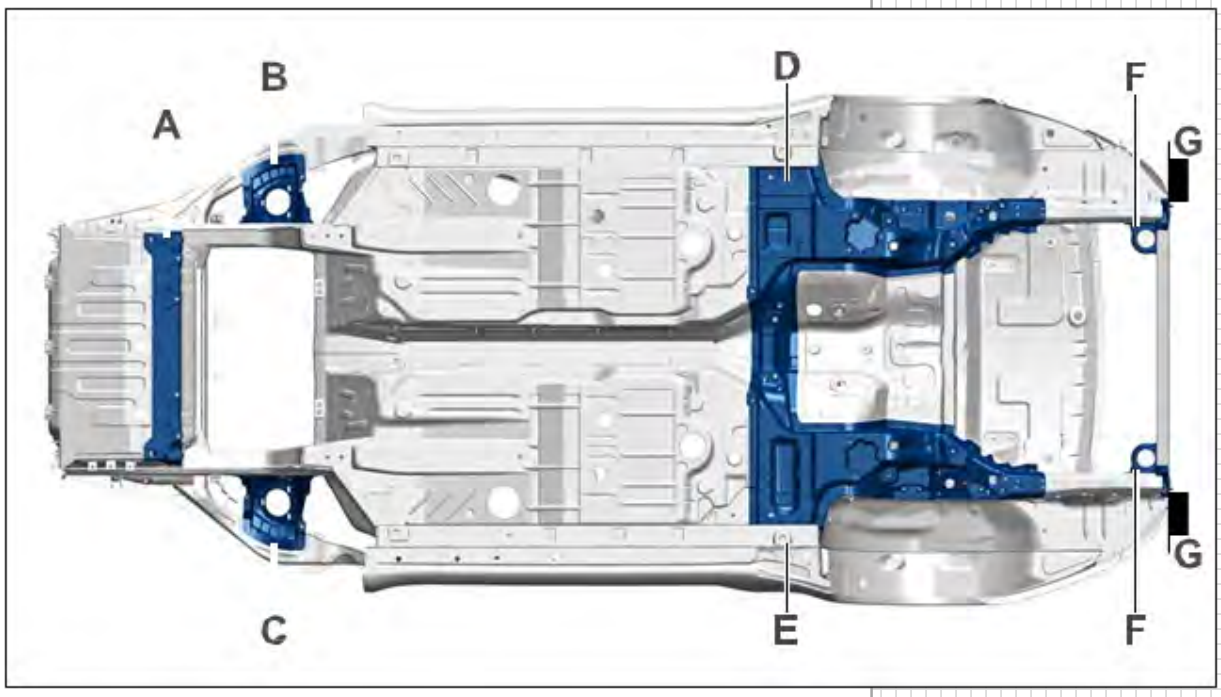

4.16.1.18

A Trunk cross member

B Strut mount, left

C Strut mount, right

D Rear beam, left

E Rear beam, right

F Engine mount left & right

G Bumper mount (impact absorber) left & right

Downloaded from www.Manualslib.com manuals search engine

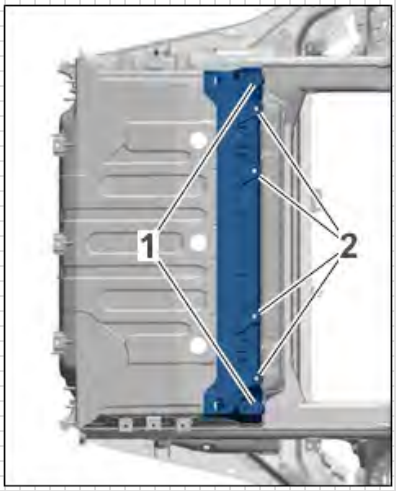

4.16.1.19

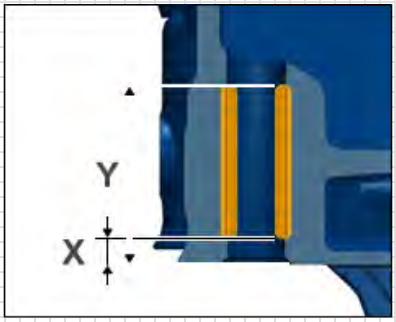

4.16.1.20

Threads – cross member

Thread 1; front axle mounting (Helicoil)	M12x1.5x30
Thread 2; axle support mounting (Helicoil)	M12x1.5x30

Threads 1 / 2:

Use	Explanation	Type	Basic value
Threads 1 and 2	Dimension Y	Length	33 mm
Threads 1 and 2	Dimension X	Length	5 mm

Use repair kit 9843 with threaded bushings 999.504.266.01.

Downloaded from www.Manualslib.com manuals search engine

Threads – strut mount

Thread 1; diagonal brace mounting (Helicoil)	M8x16
Thread 2; alarm horn mounting (only on the left strut mount) (Helicoil)	M8x16
Thread 3, sensor mounting	Thread M6

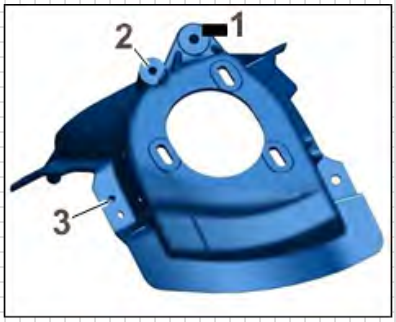

4.16.1.21

Thread 1:

Use	Explanation	Type	Basic value
Thread 1	Dimension Y	Length	20 mm
Thread 1	Dimension X	Length	5 mm

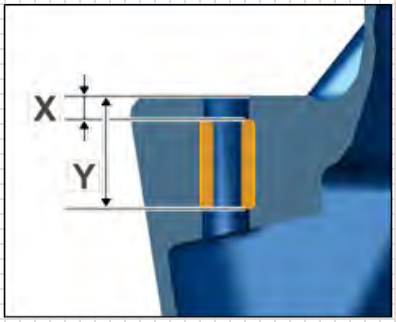

4.16.1.22

Use repair kit 9843/3 with threaded bushing 999.504.262.01.

Downloaded from www.Manualslib.com manuals search engine

Thread 2:

Use	Explanation	Type	Basic value
Thread 2	Dimension Y	Length	20 mm
Thread 2	Dimension X	Length	5 mm

Use repair kit 9843/3 with threaded bushing 999.504.262.01.

.

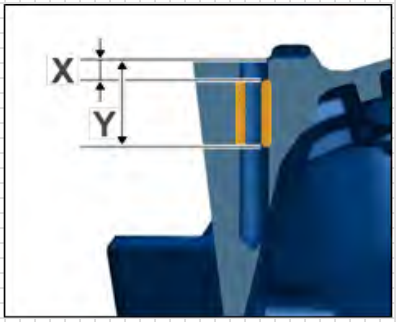

4.16.1.23

Thread 3:

Use	Explanation	Type	Basic value
Thread 3	Dimension Y	Length	9.4 mm

Use repair kit No.122-1 Item 1 Time-Sert with short threaded bushing.

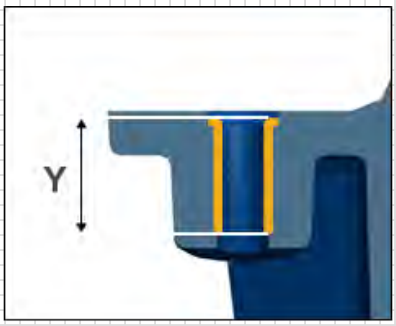

4.16.1.24

Downloaded from www.Manualslib.com manuals search engine

Longitudinal beam, rear

Left beam:

Thread 1; chassis mounting (Helicoil)	M12x1.5x24 (3x)
Thread 2; chassis mounting (Helicoil)	M10x20 (3x)
Thread 3; (Helicoil)	M10x20 (4x)
Thread 4; gearbox mounting (Helicoil)	M10x20 (1x)
Thread 5;	M10 (1x)

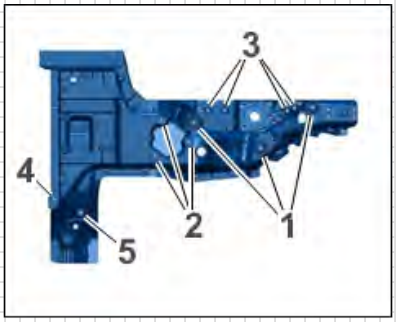

4.16.1.25

Right beam:

Thread 1; chassis mounting (Helicoil)	M12x1.5x24 (3x)
Thread 2; chassis mounting (Helicoil)	M10x20 (3x)
Thread 3; (Helicoil)	M10x20 (4x)
Thread 4; gearbox mounting (Helicoil)	M10x20 (1x)
Thread 5;	M10 (1x)
Thread 6; ground cable mounting	M8 (1x)

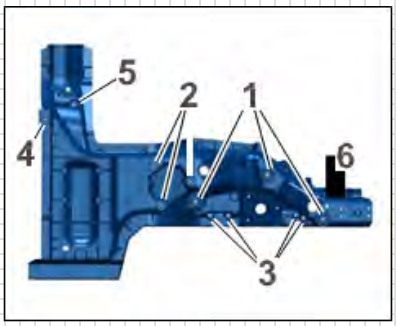

4.16.1.26

Downloaded from www.Manualslib.com manuals search engine

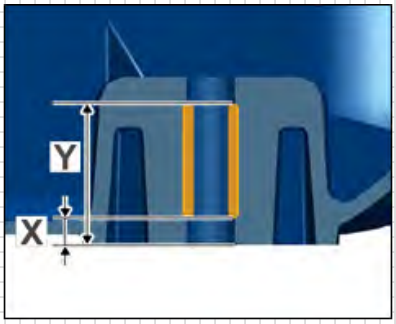

4.16.1.27

Thread 1:

Use	Explanation	Type	Basic value
Thread 1	Dimension Y	Length	27 mm
Thread 1	Dimension X	Length	5 mm

Use thread repair kit 9843 with threaded bushing 999.504.263.01.

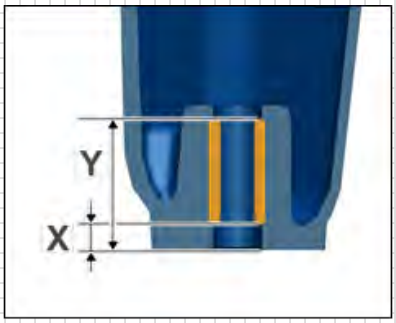

4.16.1.28

Thread 2/3:

Use	Explanation	Type	Basic value
Thread 2 and 3	Dimension Y	Length	25 mm
Thread 2 and 3	Dimension X	Length	5 mm

Use thread repair kit 9843-1 with threaded bushing 999.504.268.01.

Downloaded from www.Manualslib.com manuals search engine

Thread 4:

Use	Explanation	Type	Basic value
Thread 4	Dimension Y	Length	25 mm
Thread 4	Dimension X	Length	5 mm

Use repair kit 9843/1 with THREADED BUSHING 999.504.268.01.

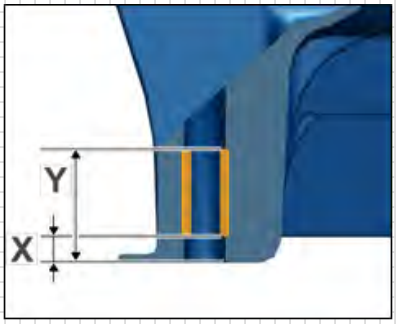

4.16.1.29

Thread 5:

Use	Explanation	Type	Basic value
Thread 5	Dimension Y	Length	37 mm
Thread 5	Dimension X	Length	10 mm

Use repair kit 9843/1 with inserter included in repair kit 9843/2 and threaded bushing 999.504.268.01.

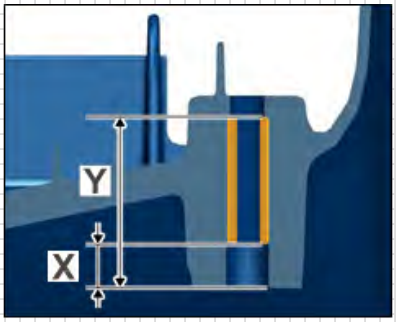

4.16.1.30

Downloaded from www.Manualslib.com manuals search engine

Thread 6:

Use	Explanation	Type	Basic value
Thread 6	Dimension Y	Length	16.2 mm

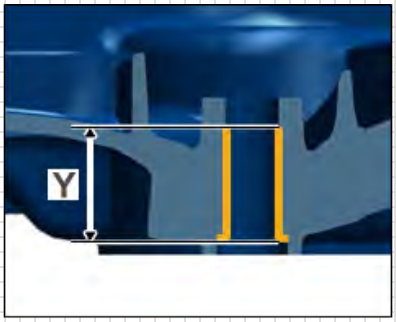

4.16.1.31

Thread repair 6 only for the right beam.

Use repair kit No. 122-1 Item 2 Time-Sert thread repair with long threaded bushing.

Cross beam, rear (engine mount)

Thread 1; in cast part	Thread M8 (2x)
Thread 2; in cast part, air filter mounting	Thread M6x10

4.16.1.32

Downloaded from www.Manualslib.com manuals search engine

Thread 1:

Use	Explanation	Type	Basic value
Thread 1	Dimension Y	Length	16.2 mm

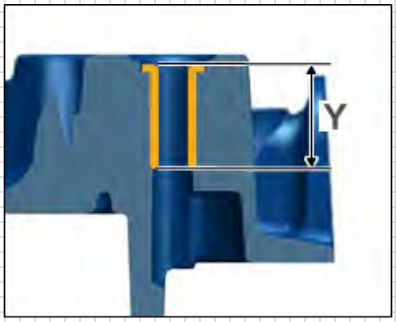

4.16.1.33

Use repair kit No. 122-1 Item 2 Time-Sert with long threaded bushing.

Thread 2:

Use	Explanation	Type	Basic value
Thread 2	Dimension Y	Length	9.4 mm

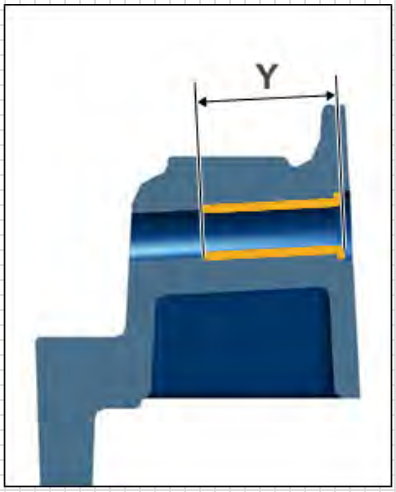

4.16.1.34

Use repair kit No.122-1 Item 1 Time-Sert with short threaded bushing.

Downloaded from www.Manualslib.com manuals search engine

4.16.1.36

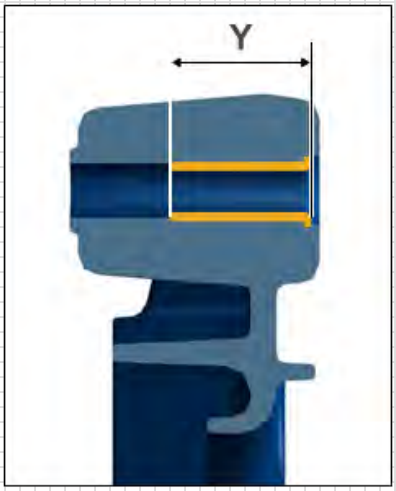

4.16.1.35

Longitudinal beam, rear (impact absorber mount)

Thread M8 in cast part

Use	Explanation	Type	Basic value
Thread 1	Dimension Y	Length	16.2 mm

Use repair kit No. 122-1 Item 2 Time-Sert with long threaded bushing.

Downloaded from www.Manualslib.com manuals search engine

4.17 Installing roof assembly

Preparation measure

NOTE

Danger of material damage if specified curing time of adhesive is not observed! In order to ensure that the bonded joint is sufficiently strong, the following conditions must be adhered to:

- The vehicle must not be used until the curing time has
- Curing time: 2 hours
- Temperature: at least 10 °C (50 °F)
- Fixing time: approx. 1 hour

A drying time of at least 10 minutes must be observed between cleaning the frame and applying primer! No cleaning solution residue may remain on the frame.

- The adhesive has an open time of **15 min**, which means that the adhesive must be applied and the component affixed within this period of time.
- To ensure that the substance is completely mixed, apply a 30 mm long bead of fresh adhesive to a piece of cardboard before processing.

4.17.1

Downloaded from www.Manualslib.com manuals search engine

Installation:

NOTE

Two people are needed in order to insert, position and secure the roof assembly.

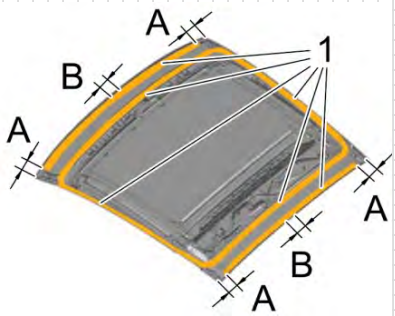

4.17.2

1. Clean bonding surfaces (1) with cleaning solution.
2. Prime bonding surfaces (1).
3. Apply adhesive on the primer.
4. Do not apply adhesive in areas (A) 50 mm and (B) 30 mm.

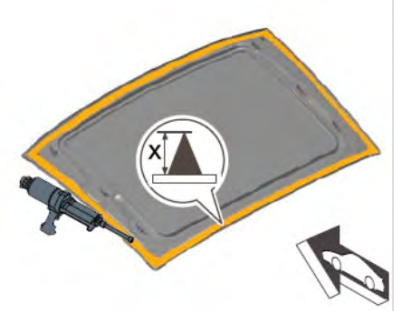

4.17.3

5. Apply a triangular bead of adhesive measuring **X = approx. 15 mm** (4.17.3).

6. Position roof assembly

Gap from front roof pillar to roof	Gap dimension 5.5 mm -1 mm
Offset from front roof pillar to roof	Gap dimension 0 mm -1 mm
Gap from rear roof pillar to roof	Gap dimension 5.5 mm -1 mm
Offset from rear roof pillar to roof	Gap dimension 0 mm -1 mm

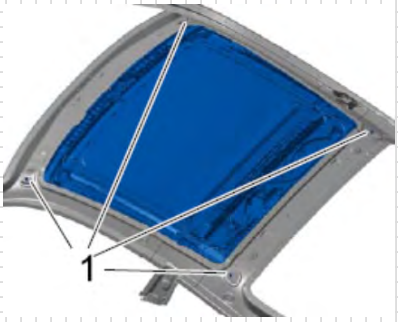

4.17.4

7. Screw on and tighten fastening nuts (**1**) on the ⇒ Tightening torque 10 Nm (7.5 ftlb.) roof assembly at front and rear (4.17.4).

Downloaded from www.Manualslib.com manuals search engine

5 Interior

5.1 General

The interior design of the new 911 GT3 Cup (991) focuses on ergonomics and driver´s safety. The center console is tilted towards the driver in order to improve accessibility of the control elements. Appearance improvements feature colored controls and a Cosworth data logger with colored display. Noise insulation is omitted for weight reduction reasons. The starter battery and the new fire extinguishing system using gaseous extinguishing agent are installed in the passenger footwell.

5.1.1

Downloaded from www.Manualslib.com manuals search engine

5.2 Drivers safety

The substantial occupant safety system of the 911 GT3 Cup (991) primarily includes the following components:

- Certified safety cage
- FIA homologated racing bucket seat with longitudinal adjustment
- Six-point safety belt connected to safety cage
- Safety steering column

5.2.1 Seat

The new developed Recaro racing bucket seat offers a high degree of safety and individual comfort to the driver. Compared to standard safety seats, this combination of seat and seat console provides considerable adjustment options. The height- and longitudinal adjustment allows setting the best possible seat position for the driver. In addition, the seat padding may be optimally adapted to the driver's body shape by means of seat cushions in different thicknesses.

5.2.1.2

An adjusting lever on the left side of the seat console allows a longitudinal adjustment of the seat position (5.2.1.1).

5.2.1.1

Downloaded from www.Manualslib.com manuals search engine

5.2.2 Seat rail tightening torques

Tighten all bolts to a tightening torque 28 Nm ±2 Nm.

Use medium-strength thread locker.

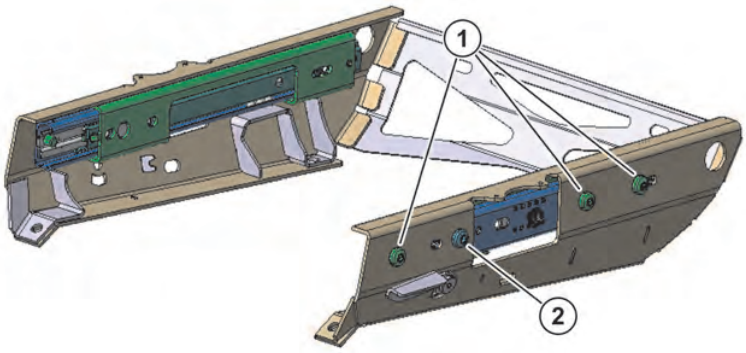

5.2.2.1

1 M10x16

2 7/16“ UNFx16

Downloaded from www.Manualslib.com manuals search engine

5.2.3 Bucket seat tightening torques

Tighten all bolts to a tightening torque 23 Nm ±2 Nm.

Use medium-strength thread locker.

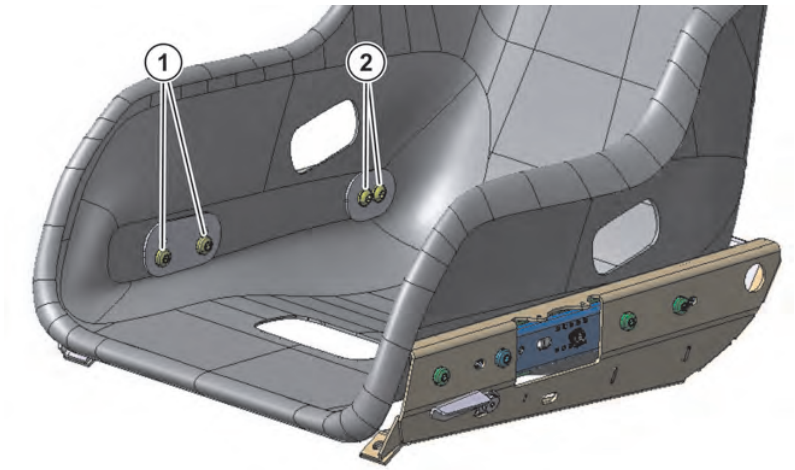

5.2.3.1

1 M10x16

2 7/16“ UNFx16

Downloaded from www.Manualslib.com manuals search engine

5.2.4 Padding system

Different seat pads are available and may be ordered in three sizes (S, M, L). The seat pads can be purchased at Recaro. On delivery, the bucket seat is equipped with standard padding in medium size (M).

Seat pad thickness

S = 30 mm (1.2“)

M = 20 mm (0.8“)

L = 10 mm (0.4“)

Contact address

RECARO Automotive GmbH & Co. KG

Stuttgarter Straße 73

D-73230 Kirchheim unter Teck

Phone: +49 (0) 70 21-93 50 00

Fax: +49 (0) 70 21-93 53 39

E-Mail: info@recaro-automotive.com

Internet: www.recaro-automotive.com

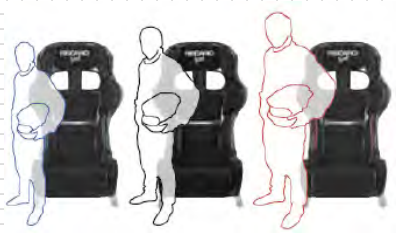

5.2.4.1

Downloaded from www.Manualslib.com manuals search engine

5.3 Steering wheel

Particular attention was paid to the steering wheel as a central control element. All necessary functions which are typical used during driving may be operated by switches and pushbuttons on the steering wheel, without removing the hands from the steering wheel.

5.3.1

The flattened bottom part of the steering wheel rim provides ample legroom during driving and when getting into and out of the car. In order to provide additional space for getting in and out, the steering wheel is attached to the steering column by using quick release coupling. If required, the steering wheel may be disconnected from the steering column.

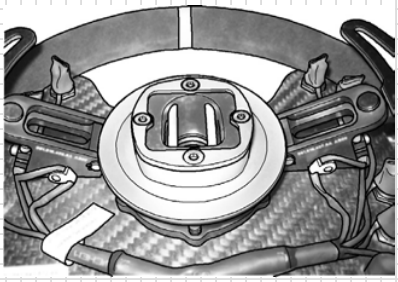

5.3.2 Quick release coupling closed

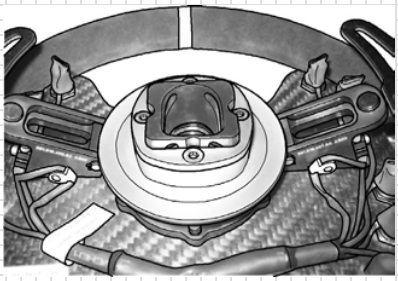

5.3.3 Quick release coupling open

Downloaded from www.Manualslib.com manuals search engine

5.4 Cockpit ventilation

Two NACA air intakes have been integrated into the front bonnet in order to ensure a fresh air supply to the vehicle interior. The left intake – as seen in the driving direction – provides fresh air through a flexible aluminum hose directly onto the driver (yellow arrow). The right intake, leads the air into the blower unit below the dashboard. A switch in the center console allows changing the outlet of the airflow. It is possible to guide the fresh air directly onto the windshield or through openings in the dashboard onto the driver.

5.4.2

5.4.1

Downloaded from www.Manualslib.com manuals search engine

Downloaded from www.Manualslib.com manuals search engine

6 Electrical system

6.1 General

The 911 GT3 Cup (991) has been significantly improved in terms of operating comfort and functionality. Compared to previous models, the electrical equipment has been upgraded and new and attractive features are available. The integration of an electro-pneumatic gear shift system, the innovative electrical system control unit, and the color display all improve the operating comfort. Moreover, the center console is now oriented towards the driver so that the operating ergonomics are considerably improved.

6.2 Power supply

6.2.1 Battery

An AGM battery (Absorbent Glass Material) with 80Ah is used in the 911 GT3 Cup (991) (6.2.1.1). Special micro-fiber glass mats are inserted tightly between the positive and negative lead plates, binding the entire battery acid. In demanding situations, higher amounts of energy can be delivered by the fast reaction between the acid and the plate material. The battery is maintenance-free and sealed. To optimize the vehicle's weight distribution, the battery is installed inside the vehicle in the passenger foot well.

6.2.1.1

The maintenance-free AGM battery offers the following advantages:

- Sealed, valve-controlled battery with high cycle stability
- High cold start performance
- No acid leaks in case of damage, vibration-, leak- and tilt-proof
- Flexible installation and safe handling
- High capacity and longer service life

The battery is designed for a cut-off voltage of 14.5 to 14.8 V

The generator cut-off voltage is 13.8 V

6.2.2 Generator

In addition to the battery, the generator ensures the power supply to the electrical consumers while the engine is running. The rated current of the generator is 150 amps.

Downloaded from www.Manualslib.com manuals search engine

6.2.3 Battery master switch

The battery master switch (6.2.3.1) cuts off all electrical circuits (battery, generator, lights, ignition and electrical controls, etc.) as well as the engine.

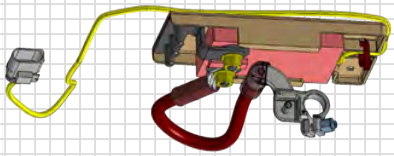

6.2.3.1

The battery master switch (Pos.2 in picture 6.2.3.2) is installed right next to the battery. It´s located on the center tunnel and covered by the battery cover, as well as the battery itself.

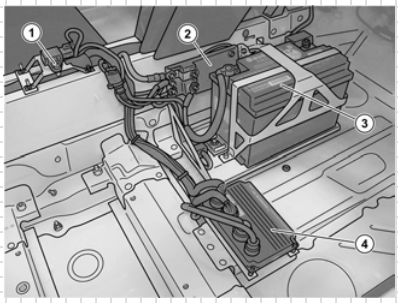

6.2.3.2

1 Acceleration sensor
2 Battery master switch
3 Battery
4 Electrical system control unit

The battery master switch can be operated in two different ways:

Inside operation

The “Main” switch (1) which is located in the center console is used as the inside actuator.

6.2.3.3

Outside operation

Another release mechanism for the battery master switch is located outside the vehicle on the driver’s side at the bottom of the windshield. Pulling the red loop activates the switch installed below the cowl and disconnects the battery from the electrical system immediately.

6.2.3.4

Downloaded from www.Manualslib.com manuals search engine

6.3 Electrical system protection

6.3.1 Electrical system control unit IPS32

In the 911 GT3 Cup (991), the IPS32 electrical system control unit takes over the functions of fuses and relays. The IPS32 also ensures the power supply to the electrical consumers. The free programmability allows the unit to respond to the individual needs of the consumers. Therefor a channel-selective, separately secured control is carried out. A diagnosis of the module is possible using the appropriate software. The diagnostic connection is located on the B-pillar on the passenger side.

The following components are connected to the IPS32:

- Paddle Shift
- Display (ICD)
- Engine control unit
- Steering
- Interior fan

Connections

6.3.1.1

1 Power supply
2 HI output
3 LOW input
4 Input switch

Downloaded from www.Manualslib.com manuals search engine

6.3.1.2

Pin No.	Part name	Part name	Pin No.
1	Display & option plug	Windscreenwiper	17
2	Transponder	Flasher right (front & rear)	18
	ID-Lights		
	Frontlight		
	Generator		
3	Option AC Unit	Low beam left	19
4	LED daytime driving light	Low beam right	20
5	Flasher left (front & rear)	Starter	21
6	Brakelight (right & left)	Intakepumps 3 & 4	22
7	Option ABS ct. 15	Shiftec compressor	23
	Stater button		
	Shiftec ct. 15	Shiftec valveblock	
	MS4.6 ECU ct. 15		
8	Fog light (left)	Option (heated windscreen)	24
9	Center brakelight	High beam left	25
10	Option fan engine compartment	Intakepumps 1 & 2	26
11	Taillight (right)	High beam right	27
12	Taillight (left)	Option (additional lights)	28
13	Option (electric powersteering)	Option (reserve fuel pump	29
14	Heating flap	Main fuel pump	30
15	Lambda 1-3 & 4-6	Cockpit ventilation fan	31
	Data logger		
	MSA Box		
	Sensor option		
	Yaw rate sensor		
16	Option ABS ct. 30	ECU MS4.6	32
		Camshaft sensor Zyl. 1	
	MS4.6	Oil level	
		Intake flaps 1 & 2	
	Brakelight switch	Injection valves 1-3 & 4-6	
		Ignition coils 1-6	

6.3.2 Fuse holder hydraulic pump

A fuse holder is provided below the battery cover in the passenger foot well. The holder is equipped with an 80 A fuse and protects the hydraulic pump of the electrohydraulic steering system.

6.4 DME engine electronics

CAN network

In addition to the sensors and actuators that are directly connected to the DME control unit, the DME control unit has access to additional data provided by other ECUs as input or output variables. These external data are accessed via the internal high-speed network, the so-called CAN bus (Controller Area Network).

Downloaded from www.Manualslib.com manuals search engine

6.4.1 DME control unit

The Bosch MS 4.6 control unit is installed in the rear section of the passenger side. The wiring harness leads through an electrical connection directly to the engine. The 911 GT3 Cup (991) is equipped with the engine control unit Bosch MS 4.6 that has been developed specifically for use in motorsports. The controller can be programmed using a special software and also offers the possibility of error diagnosis. Device programming is carried out exclusively at Porsche Motorsport. The online fault diagnosis functionality is only available for the engineers of Porsche AG. If an engine overhaul is to be performed at Porsche Motorsport, the corresponding engine control unit has to be sent with the engine. On one hand, this ensures safe operation on the engine test bench; on the other hand the engine lifetime counter in the ECU can be reset immediately after overhauling the engine.

NOTE For safety reasons, disconnect the control unit from the wiring harness when performing welding work.

The MS 4.6 provides the following functions:

- Cylinder bank-selective lambda control
- Pit lane speed limiter
- Ignition cut for power shift with sequential gearbox
- Asymmetric injection and ignition control
- Knock control
- Electronic throttle system and blipper function

Error codes		Explanation
1	E_tmot	Error engine temperature sensor
2	E_toil	Error engine oil temperature sensor
4	E_tgear	Error gearbox oil temperature sensor
8	E_tint	Error air intake temperature sensor
10	E_tamb	Error ambient air temperature sensor
11	E_thr	Error throttle potentiometer
12	E_lsu	Error lambda sensor bank 1
13	E_lsu2	Error lambda sensor bank 2
14	E_lsuh	Error lambda sensor heating bank 1
15	E_lsuh2	Error lambda sensor heating bank 2
16	E_ks1	Error knock sensor bank 1
17	E_ks2	Error knock sensor bank 2
21	E_crank	Error crankshaft sensor
22	E_ub	Error supply voltage
23	E_speedgps	Error vehicle speed via GPS
25	E_poil	Error engine oil pressure sensor
26	E_pcrank	Error crankcase pressure sensor
27	E_pwat	Error engine coolant pressure sensor
28	E_pamb	Error ambient pressure sensor
29	E_paddn	Error shift paddle downshift
30	E_padup	Error shift paddle upshift
31	E_etcdiff	Error deviation throttle flap
32	E_aps	Error throttle pedal
33	E_lap	Error lap function
35	E_gearpoti	Error gear potentiometer
36	E_steer	Error steering wheel sensor
37	E_yaw	Error yaw rate sensor
38	E_mapsw	Error map switch
41	E_accx	Error acceleration sensor
42	E_accy	Error acceleration sensor
43	E_accz	Error acceleration sensor
44	E_speed	Error speed signal
45	E_vwheel_fl	Error wheel speed sensor front left

Downloaded from www.Manualslib.com manuals search engine

46	E_vwheel_fr	Error wheel speed sensor front right
47	E_vwheel_rl	Error wheel speed sensor rear left
48	E_vwheel_rr	Error wheel speed sensor rear right
49	E_pclutch	Error clutch pressure sensor
51	E_pfuel	Error fuel pressure sensor
53	E_pgear	Error gearbox pressure sensor
54	E_brev	Error reverse gear switch
61	E_psdia_fpump	Error fuel pump
62	E_psdia_mil	Error MIL (malfunction indicator lamp)
63	E_psdia_oillamp	Error oil pressure warning
66	E_psdia_etc	Error throttle flap
67	E_psdia_intake-manifoldflap	Error resonance flap 1
68	E_psdia_intake-manifoldflap2	Error resonance flap 2
71	E_can1	Error CAN 1
72	E_can2	Error CAN 2
73	E_can3	Error CAN 3
77	E_psdia_vlvdn	Error shift valve downshift
78	E_psdia_vlvup	Error shift valve upshift
79	E_cam	Error camshaft sensor
84	E_gearpoti2	Error gear potentiometer 2
85	E_ecusply	Error voltage supply ECU
86	E_ignition_bank1	Error ignition bank 1
87	E_ignition_bank2	Error ignition bank 2
88	E_ignition_cyl1	Error ignition cylinder 1
89	E_ignition_cyl2	Error ignition cylinder 2
90	E_ignition_cyl3	Error ignition cylinder 3
91	E_ignition_cyl4	Error ignition cylinder 4
92	E_ignition_cyl5	Error ignition cylinder 5
93	E_ignition_cyl6	Error ignition cylinder 6
94	E_injection_cyl1	Error injection cylinder 1
95	E_injection_cyl2	Error injection cylinder 2
96	E_injection_cyl3	Error injection cylinder 3
97	E_injection_cyl4	Error injection cylinder 4
98	E_injection_cyl5	Error injection cylinder 5
99	E_injection_cyl6	Error injection cylinder 6
100	E_nvram	Error NVRAM
101	E_ssply1	Error sensor voltage supply 1
102	E_ssply2	Error sensor voltage supply 2
103	E_ssply3	Error sensor voltage supply 3

6.4.2 DME diagnosis

For Bosch component diagnosis, a separate connector is provided on the wiring harness, which is located on the B-pillar of the passenger side. This connection allows communication between the ECU and a computer using an interface cable. The Bosch MS4.6 engine control unit originates from the GT3 Series (MED17). A software tool called RaceCon is available for diagnosis. This software is used to display certain parameters and provides the opportunity to delete error entries in the control unit.

RaceCon (USB drive):

Porsche part number: 991.618.815.8A

6.4.3 Carburation

Carburation is cylinder-selective and is created by injecting fuel into the intake ducts. The fuel pressure sensor of the 911 GT3 Cup (991), is located at the supply line in the engine compartment.

6.4.4 Ignition system

A fully electronic ignition system is used on the 911 GT3 Cup (991) engine. This means that the ignition coils receive the ignition signals directly from the ECU. The direct-ignition coils which mounted on top of the spark plugs are extremely rugged and temperature-resistant. Even under extreme conditions the coils provide the required ignition energy.

Downloaded from www.Manualslib.com manuals search engine

6.5 Sensors

Upon delivery, the following sensors are used in the vehicle:

Parameter	Label in the PI Cosworth ICD Display	Label in Bosch RaceCon
Engine		
Oil temperature	Oil Temp	toil
Water temperature	Water Temp	tmot
Oil pressure	Oil Pressure	poil
Water pressure	Eng Coolant Pres	pwat
Fuel pressure	Fuel Pres	pfuel
Accelerator pedal position	APS	aps
Throttle angle	ATH	ath
Air pressure	Air Pressure - Airbox	pu
Air temperature	Air Temp - Intake	tans
Crankcase pressure (relative)	–	pcrank_rel
Camshaft phase sensor	–	phspos_w
Flywheel speed sensor	RPM	nmot
Cooling water level switch	Water Level Switch	–
Gearbox		
Gearbox potentiometer	Gear Pos Volts	ugearp
Clutch pressure	Pressure clutch	pclutch
Gearbox oil temperature	Gearbox Oil Temp	tgear
Entire vehicle		
Wheel speed sensor (4x)	Wheel Speed	Vwheel_xx
Battery voltage	Battery Voltage at Dash	ub
Acceleration sensor (x,y,z)	G Lat G Long G Force Vert	accy accx
Brake bias potentiometer	Brake Bias Setting	–
Brake light switch	Brake Status	–

104	E_etccal	Error calibration throttle
105	E_canmsg_dyno_0	Error can message
106	E_canmsg_dyno_1	Error can message
107	E_canmsg_dyno_2	Error can message
108	E_canmsg_icd_0	Error can message
109	E_canmsg_icd_1	Error can message
110	E_canmsg_icd_2	Error can message
111	E_canmsg_shiftec_1	Error can message
112	E_canmsg_shiftec_2	Error can message
113	E_icmpr	Error compressor current
114	E_tcmpr	Error compressor temp.
115	E_ucmpr	Error compressor voltage
116	E_accx_can	Error acceleration sensor
117	E_accy_can	Error acceleration sensor
118	E_accz_can	Error acceleration sensor
119	E_steer_can	Error steerangle sensor
120	E_yaw_can	Error yaw rate sensor
121	E_paccu	Error compressor pressure
123	E_etccal_abort	Error calibration throttle

Downloaded from www.Manualslib.com manuals search engine

6.5.1 Sensor rated values

Parameter	Bosch label	Rated value	Comment
Engine idle speed	nmot	2000 +/-100 rpm	At operating temperature (oil 80 °C (176 °F)
Throttle angle idle	ath	6.5 +/- 1.0°	
Throttle angle full power	ath	80 +/- 2 °	Bosch value => corresponds to 100% at PI Dash
Lambda cyl. 1-3/4-6	Lambda / 2	0.9 +/- 0.1	Throttle > 10°
Lambda control factor	Frc / 2	1.0 +/- 0.2	
Battery voltage	ub	13 +/- 1 V	
Water pressure	pwat	> 0.2 bar (2.9 psi)	
Fuel pressure	pfuel	4.6 - 0.3 bar (66.7 – 4.3 psi)	Averaged over a full lap
Clutch pressure	pclutch	> 30 bar (435 psi)	Clutch completely pressed
Gearbox potentiometer voltage	ugearp		

Downloaded from www.Manualslib.com manuals search engine

6.5.2 Optional sensors

Porsche Motorsport optionally offers a steering angle sensor and brake pressure sensors. In addition, a memory extension is recommended when fitting optional sensors. See chapter 6.6.1

Downloaded from www.Manualslib.com manuals search engine

6.6 ICD Display

6.6.1 General

6.6.1.1

The ICD (Intelligent color display) supplied by PI Cosworth is a universal display unit with integrated data storage. The 6.2" TFT color display provides the driver with substantial information. 8 LEDs acting as shift lights (green - yellow - red) are located on top of the display. The four LEDs arranged on either side are used as alarm indicators. The data saved in the internal memory (32MB) can be downloaded using an interface cable via the diagnostic connector on the passenger side.

The display contains five main pages that are configured in accordance with the respective requirements.

During driving, only the following two pages configured for the intended purpose are available:

- Race
- Practice

When the vehicle speed is less than 10 kph (6.2 mph), three additional diagnosis pages are visible.

Downloaded from www.Manualslib.com manuals search engine

The yellow button (1) on the right side of the steering wheel is used to navigate through the different pages. A long press changes the page number; a short press navigates to the main page (Race).

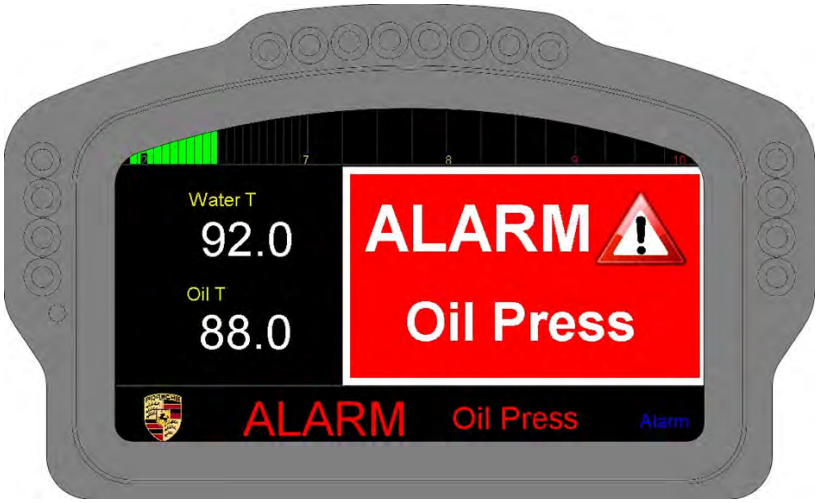

6.6.1.3

When adjusting the brake bias, activating the pit speed or when an alarm is active, the corresponding displays have priority and overlay other pages.

Extension option

An upgrade kit for the display is available at Cosworth:

Cosworth part number: 01D-032953-P-CUP

The kit includes the following extensions:

- Storage extension from 32 MB to 128 MB
- The logging rate is increased from 50 to 200 Hz
- Extension of five analog inputs to nine analog inputs. The inputs are available for steering angle, brake pressures and engine compartment temperature.
- Real-time lap time calculation

6.6.1.2

Contact address:

Brookfield Technology Centre
Twentypence Road
Cottenham
Cambridge
CB24 8PS
United Kingdom
Phone: +44 (0)19 54-25 36 00
Fax: +44 (0)19 54-25 36 01
E-Mail: sales.electronics@cosworth.com

Downloaded from www.Manualslib.com manuals search engine

6.6.2 Race page

The “Race” page configured for races is divided into three information areas.

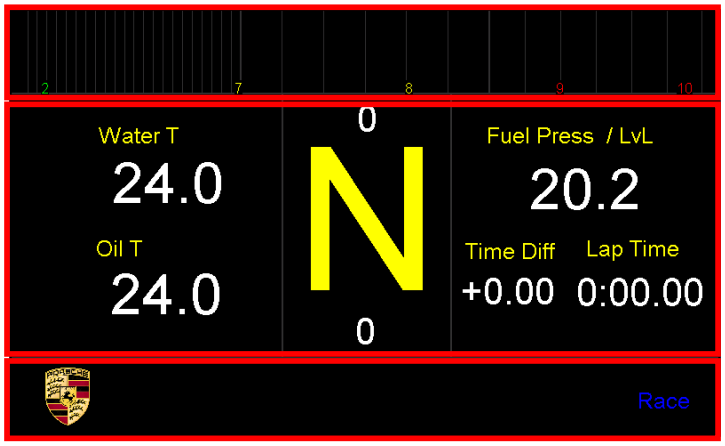

6.6.2.1

1 Engine speed

2 Channel information

3 Alarm information

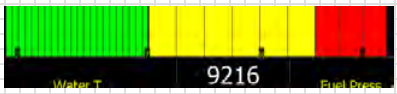

6.6.2.2

Engine speed is sent from the Bosch ECU to the display and is displayed from 1500 to 10,000 rpm. The speed area is divided into three sections:

- Green from 1,500 to 7,000 rpm
- Yellow from 7,000 to 8,500 rpm
- Red from 8,500 to 10,000 rpm

The shift lights located on top of the display are linked to the speed signal and are activated according to the above mentioned thresholds.

Downloaded from www.Manualslib.com manuals search engine

The display is divided into three main areas.

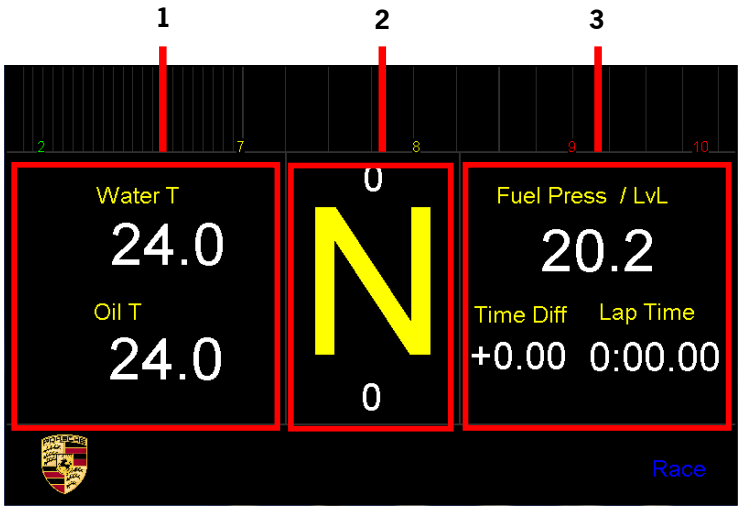

6.6.2.3

1 Channel pairs to be selected by a switch on the steering wheel

2 Fixed display of RPM, gear number and speed

3 Fixed display of Fuel level (after power on), if you start the engine you see the Fuel Press for 3 seconds and after 3 seconds the Fuel Press switches to Fuel Cons. Below qualifying mode and lap time is shown.

Left panel

The left panel (6.6.2.4) displays a rotating pair of parameters:

Order	Display name	Channel Description	PI Toolbox channel name
1	Water T Oil T	Water temperature Oil temperature	MS4 tmot MS4 toil
2	Oil P Fuel P	Oil pressure Fuel pressure	MS4 poil M pfuel
3	Fuel lap Fuel Used	Fuel usage per lap Total fuel usage	MS4 fuellap old MS4 fueltotal
4	Fuel Level Oil level	Fuel level Oil level	Fuel Level
5	Brake bias Brake bal	Brake bias acc. to potentiometer Brake balance from brake pressure sensors	Brake Bias Brake Balance

6.6.2.4

Downloaded from www.Manualslib.com manuals search engine

6.6.2.5

6.6.2.6

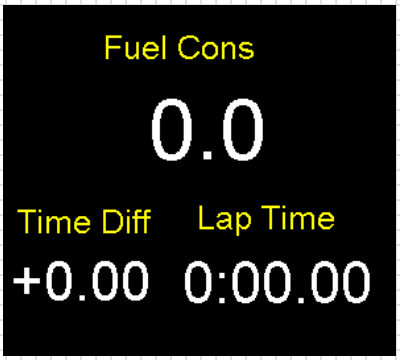

6.6.2.7

6.6.2.8

Center panel/fixed display

The top value is related to the engine speed. The large "N" in the middle indicates the gear number and the lower number displays the vehicle speed.

Display	Description
-	Indicates a gear position between 2 valid gear numbers
R	Reverse
N	Neutral
F	An unrecognized value is being sent from the Bosch ECU
1,2,3,4,5,6	Valid gear numbers

Right panel

The first value indicates the fuel level, but fuel pressure will be displayed for a short time during the engine start procedure. In normal running the Fuel Cons is shown. To reset the fuel consumption number, press and hold the Mark button for more than 1.5 seconds.

Display	PI Toolbox Channel	Description
Fuel Pressure	MS4 pfuel	Shown for 3 seconds after the engine has started to turn over (MS4 tmot > 0)
Fuel Level	Fuel Level	The fuel sensor in the fuel tank has to be calibrated to show exact values.

"Time Diff" shows gain or loss compared to a reference lap.

Display	Example	Description
Minus number	-0.25	0.25 seconds quicker compared to the previous lap
Positive number	+0.3	0.3 seconds slower compared to the previous lap

Lap Time Display (two options)

Display	PI Toolbox Channel	Description
Fixed time	Lap Time	After the car passes the finish line, the lap time is displayed for 30 seconds
Rolling time	Rolling	Stopwatch time for the current lap, updated after passing the finish line

Alarm information

The lower area shows system warnings and alarms, when they occur.

Downloaded from www.Manualslib.com manuals search engine

6.6.3 Practice page

The relevant practice data are configured on the “Pract” page of the display. The layout is similar to the “Race” page but with different channel information.

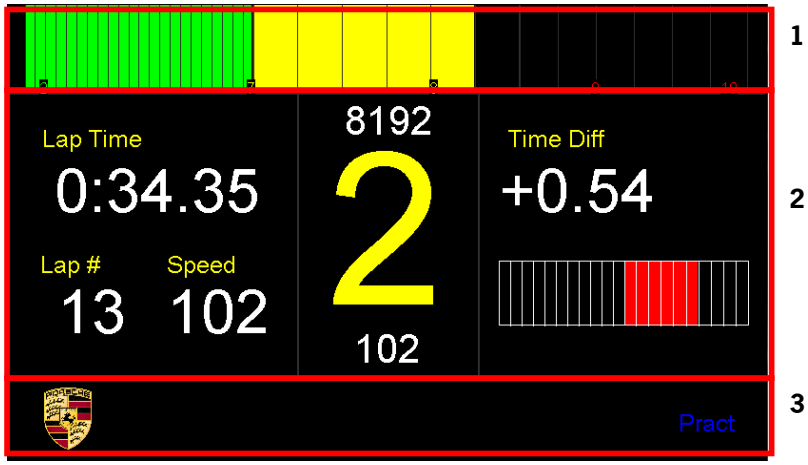

6.6.3.1

1 Engine speed

2 Channel information

3 Alarm information

Left panel

Two different times can be displayed on the left panel (6.6.3.2). The time is always shown in the following format:

m:SS.ss

Display	Description
Lap Time	The lap time from the lap just completed is shown for 30 seconds.
Rolling Time	The time for the current lap is updated when passing the finish line.

Lap #: Number of completed laps

Speed: Speed information from engine ECU

6.6.3.2

Downloaded from www.Manualslib.com manuals search engine

Right panel

Time Diff: This is the time difference calculated in “qualifying mode“ between the current lap and a reference lap.

The upper image (6.6.3.3) shows a negative value, indicating that the driver is currently 0.11 seconds faster than the reference lap. The green bar also shows the same value. The range of the bar graph is from -1 to +1 second.

6.6.3.3

The lower image (6.6.3.4) shows a slower lap by 0.54 seconds.

6.6.3.4

Downloaded from www.Manualslib.com manuals search engine

6.6.4 Warmup page

Enlarged letters and numbers of Rpm, water temperature, and oil temperature are displayed on the “warmup” page (6.6.4.1). This allows the page and the different parameters to be visible from outside the car.

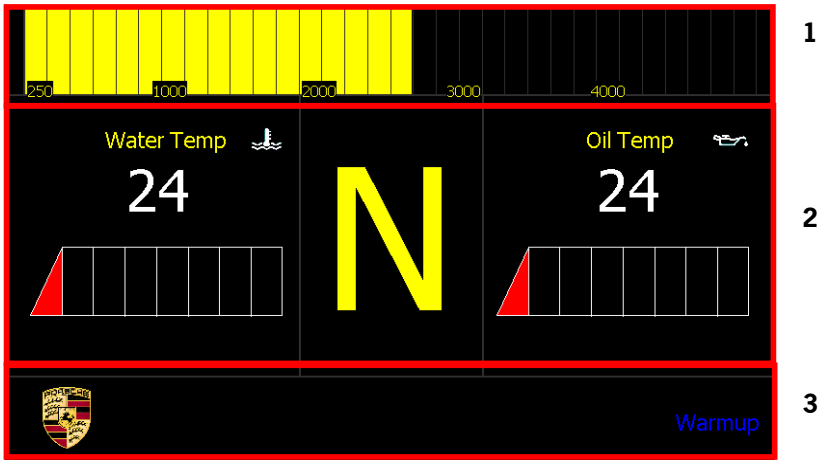

6.6.4.1

1 Engine speed

2 Channel information

3 Alarm information

The engine warmup speed range is shown in a smaller scale on the bargraph. The following rpm range is sufficient for warming up the engine:

RPM from 0 to 5,000 rpm are indicated in yellow.

The scales of the bargraph for water and oil temperature shows 0 to 120 °C (32° - 248 °F), with all values over 100 °C (212 °F) in red.

The gear number is also displayed in the middle of the “Warmup” page.

6.6.4.2

Downloaded from www.Manualslib.com manuals search engine

6.6.5 Vitals page

The „Vitals“ page (6.6.5.1) gives an overview of the vital functions of the engine and the vehicle. The important channels are all displayed on one page. The displays and values on this page are fixed and cannot be changed.

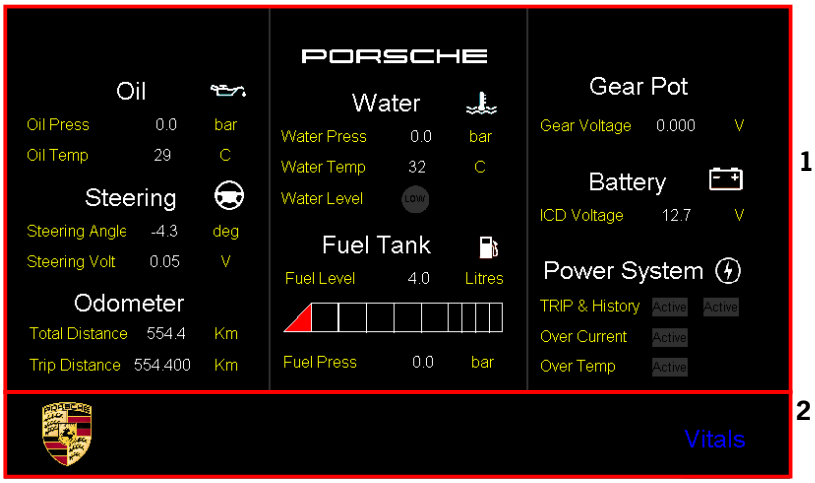

6.6.5.1

1 Channel information

2 Alarm information

Left panel

Oil display (6.6.5.2)

Label	PI Toolbox channel	Resolution	Unit	Scale
Oil Press	MS4 poil	0.05	bar	12.75 (185 psi)
Oil Temp	MS4 toil	1	Grad C Degrees C	-40 to 215 (-40 to 419 °F)

6.6.5.2

Steering (6.6.5.3)

6.6.5.3

Downloaded from www.Manualslib.com manuals search engine

Odometer (6.6.5.4)

To reset the Odometer press and hold the Mark button for more than 1.5 seconds.

Label	Resolution	Unit	Scale	Description
Total Distance	0.1	km	0 - 999999.9 (0-621371 mi)	Cumulative channel
Trip Distance	0.001	km	0 - 9999.999 (0-6213.71 mi)	Trip resets

6.6.5.4

Middle panel

Water display (6.6.5.5)

Label	PI Toolbox channel	Resolution	Unit	Scale	Description
Water Press	MS4 pwat	0.05	bar	12.75 (185 psi)	
Water Temp	MS4 tmot	1	Deg C	-40 to 215 (-40 to 419 °F)	
Water Level	SW09 Water Level Button	1	Digital	0 - 1	Value of 1 indicates “level sensor is immersed”.

6.6.5.5

Fuel tank display (6.6.5.6)

Label	PI Toolbox channel	Resolution	Unit	Scale	Description
Fuel Level	Fuel Level	0.1	Liter	0 - 110.0 (0 – 29 gal)	Calibrated sensor, so min and max could change.
Bargraph	Fuel Level	1			Non-linear display
Fuel Press	MS4 pfuel	0.05	bar	12.75 (185 psi)	

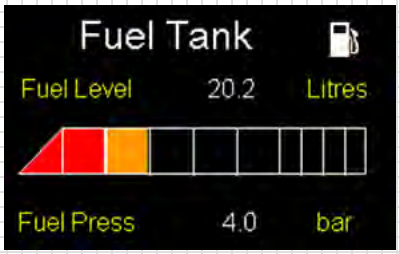

6.6.5.6

Downloaded from www.Manualslib.com manuals search engine

6.6.5.7

6.6.5.8

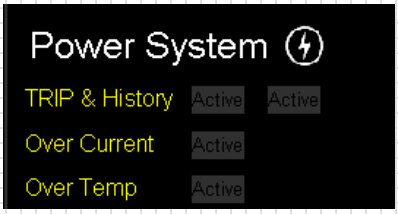

6.6.5.9

Right panel

Gear Pot (6.6.5.7)

Label	PI Toolbox channel	Resolution	Unit	Scale
Gear Voltage	MS4 ugearp	0.001	V	65.535

Battery display (6.6.5.8)

Label	PI Toolbox channel	Resolution	Unit	Scale	Description
ICD Voltage	Battery Voltage	0.1	V	0 - 99.9	Voltage seen by the ICD

Power system (6.6.5.9)

Display	PI Toolbox channel	Unit	Description
Trip	IPS Error Alarm	Bit	Will show “active” if there is a faulty current on any of the 32 IPS channels.
Over current	IPS Output Current Alarm	Bit	Will show “active” if the IPS power system has seen more than its rated current.
Over Temp	IPS Temp Alarm	Bit	Will show “active” if the IPS power system maximum operating temperature is exceeded.

Downloaded from www.Manualslib.com manuals search engine

6.6.6 Pedals page

The “Pedals” page (6.6.6.1) displays all important pedal information. Brake pressures as well as the position/function of the accelerator pedal and the electronic throttle can be checked.

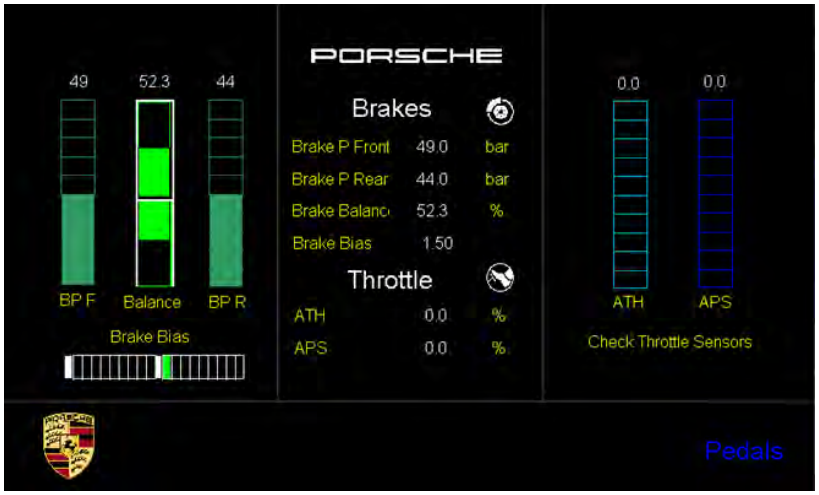

6.6.6.1

Left panel

A graphical interpration of front and rear brake pressures and of the balance and the brake bias is displayed (6.6.6.2)

Display	PI Toolbox channel	Resolution	Unit	Scale	Description
BP F	Brake Press Front	1	bar	0 – 100 (0 - 1450 psi)	
Balance	Brake Balance	1	%	0 - 100	Per-cent value
BP R	Brake Press Rear	1	Bar	0 – 100 (0 - 1450 psi)	
Brake Bias	Brake Bias	1		-10 to +10	Mechanical bias position

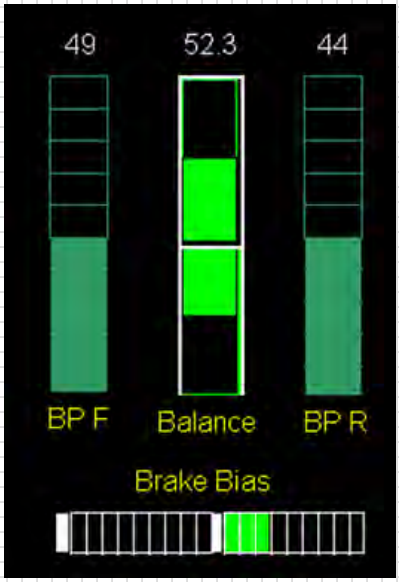

6.6.6.2

Downloaded from www.Manualslib.com manuals search engine

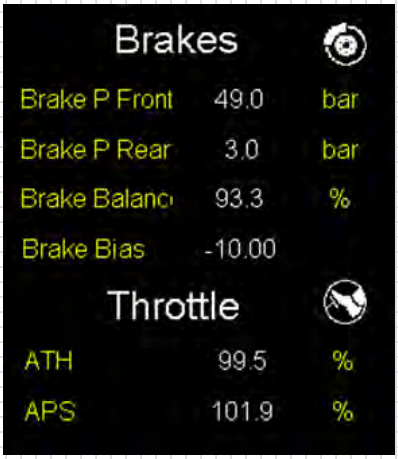

6.6.6.3

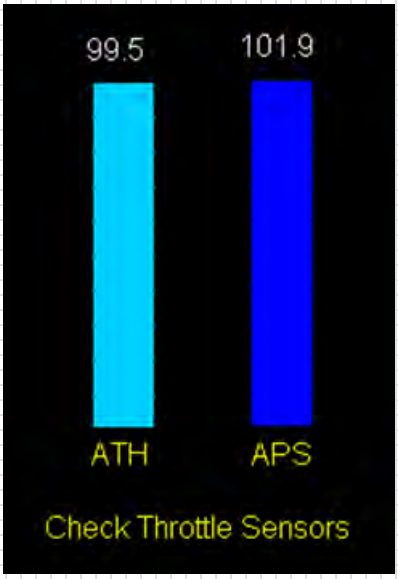

6.6.6.4

Middle panel

Shows numerical values for brake and throttle

Display	PI Toolbox channel	Resolution	Unit	Scale	Description
Brake P Front	Brake Press Front	0.1	bar	0 – 280 (0-4,061 psi)	250 bar sensor
Brake P Rear	Brake Press Rear	0.1	Bar	0 – 280 (0 – 4,061 psi)	250 bar sensor
Brake Balance	Brake Balance	0.1	%	0 - 100	Mathematical calculation of balance
Brake Bias	Brake Bias	1		-10 to +10	Mechanical bias position
ATH	MS4 ATH	0.1	%	0 - 127.4	Engine throttle sensor
APS	MS4 APS	0.1	%	0 - 127.4	Pedal sensor

Right panel

Graphical representation of the fly-by-wire sensors

Display	PI Toolbox channel	Resolution	Unit	Scale	Description
	MS4 ATH	0.1	%	0 - 127.4	Numerical engine throttle sensor
	MS4 APS	0.1	%	0 - 127.4	Numerical pedal sensor
ATH	MS4 ATH	10	%	0 - 100	Bargraph engine throttle sensor
APS	MS4 APS	10	%	0 - 100	Bargraph pedal sensor

Downloaded from www.Manualslib.com manuals search engine

6.6.7 Additional information

Overlays

Additional information of higher priority will overlay all other displays for a limited period.

Brake bias:

While adjusting the mechanical brake bias, values in steps of 0.25 will be displayed. The display will keep this setting change one second and returns afterwards to the previous display (6.6.7.1).

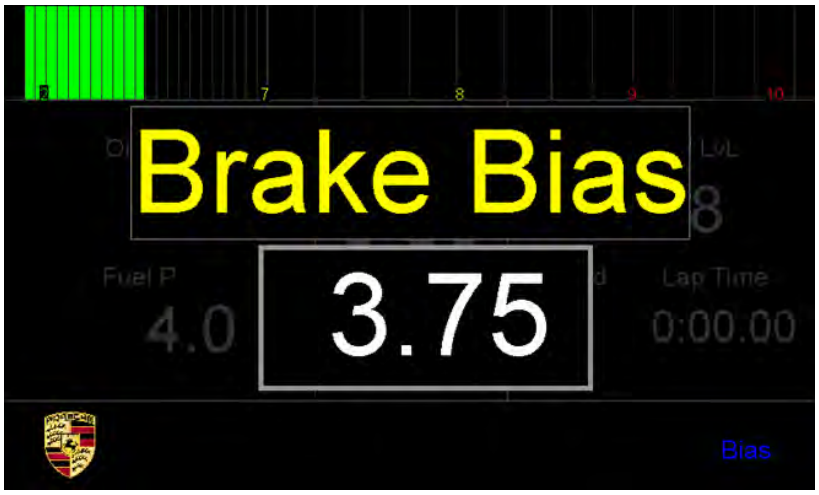

6.6.7.1

Downloaded from www.Manualslib.com manuals search engine

6.6.7.2

Pit speed

"Pit Speed" is enabled with the orange switch (1) on the steering wheel (6.6.7.2). Activating the "Pit speed" mode only possible above 10 kph (6.2 mph)

There are two types of pit speed display:

The green background is displayed as long as the target speed of 60 kph (37 mph) is not exceeded (6.6.7.3).

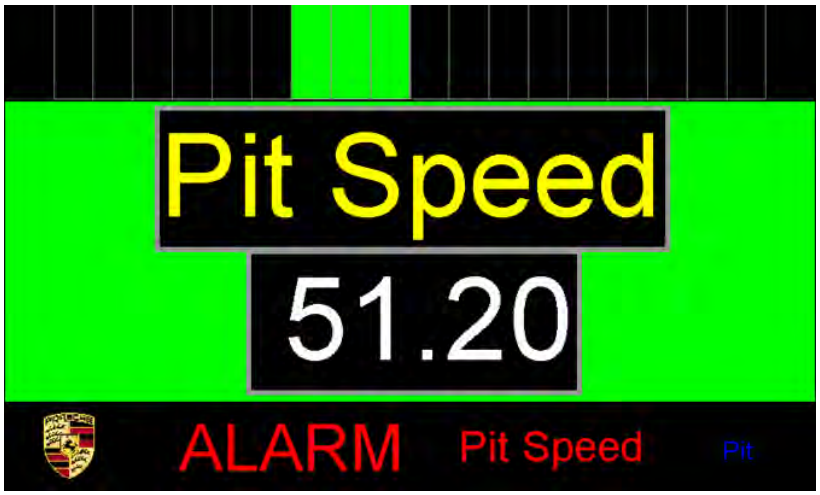

6.6.7.3

The red background is displayed as soon as the target speed of 60 kph has been exceeded (6.6.7.4).

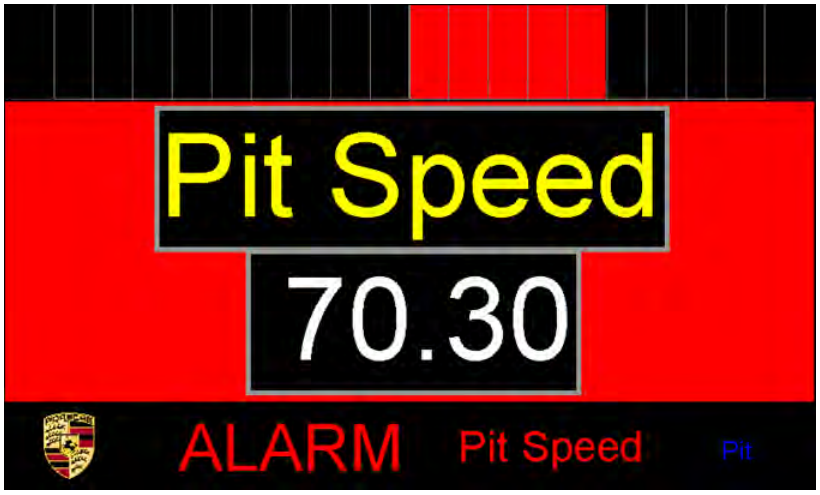

6.6.7.4

Downloaded from www.Manualslib.com manuals search engine

Alarm displays

There are three types of alarm displays:

Alarm level	Where	Text	Lights
1	Middle display panel	ALARM	4 flashing lights
2	Lower information area	ALARM/WARN	Continuous lights
3	Lower information area	ALARM/WARN	Continuous lights

Level 1 alarms

The main alarm page is triggered by only a few parameters. This alarm page has the highest priority and will always be displayed in the foreground.

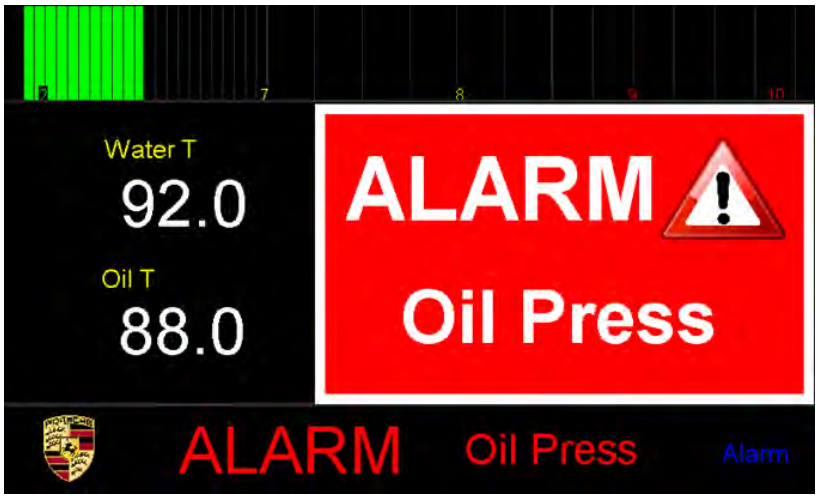

6.6.7.6

Any alarm can be cancelled manually but if the error is not sporadic and remains active, the alarm re-appears on the display.

Priority	Alarm	Channel	Conditions	Description
1	Water Temp.	MS4 tmot	>110°C (230 °F) more than 2 sec.	Can be cancelled, re-trigger after 2 seconds
2	Oil Press	MS4 B oillamp	Bit is active	This alarm is displayed at least 1 sec. (by means of calculated channel “Alarm Oil Press Display“)

6.6.7.5

Alarm with highest priority: the two upper LEDs of the display are flashing.

Downloaded from www.Manualslib.com manuals search engine

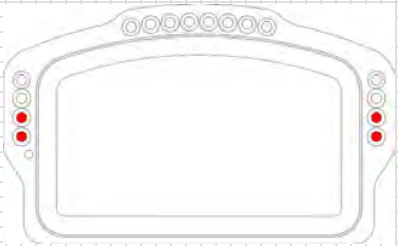

6.6.7.7

Alarm/warning with lower priority:

The two lower LEDs of the display are lit.

Level 2 alarms

Every level 2 ALARM is labeled as ALARM. If the message has lower priority "WARN" appears in the display, together with the error description.

6.6.7.8

Priority	Alarm	Channel	Conditions	Description
3	Fuel pressure	MS4 pfuel	<2.5 bar (36 psi) for 5 sec.	Engine speed more than 2000 rpm
4	Oil temperature	MS4 toil	>140°C (284 °F) for 5 sec.	
5	Water pressure	MS4 pwat	<0.35 bar (5 psi) for 10 sec.	Engine speed more than 5000 rpm Water temperature at least 68 °C (154 °F) Vehicle is moving
6	Battery	Battery Voltage	<11.5 V for 5 sec.	Engine speed more than 2000 rpm
7	Water level	Engine Sensor on Digital 15	After 5 sec.	

Downloaded from www.Manualslib.com manuals search engine

Level 3 alarms

Any additional level 3 warning or information message is shown in the display with a short description.

Priority	Alarm	Channel	Conditions	Description
8	Pit Speed	SW03 Pit Speed Button	Active for 0.5 sec.	
9	Gearbox	MS4 B emsw	Active for 1 sec.	Gearbox emergency switch for manual shift without querying relevant parameters (no autom. double de-clutching, no rev matching)
10	Low fuel	Fuel Level	<7 liters (1.8 gal) for 12 seconds	Engine speed more than 2000 rpm
11	Ignition on	Condition Ignition	Ignition is active	Engine rpm 0 (e.g. after engine stop)
12	Low RPM	Engine cranking	Active for 0.5 sec.	

6.6.7.9

Warning/information:

The upper left LED of the display is lit.

Downloaded from www.Manualslib.com manuals search engine

Wheel lock lights

This function is provided to help the driver to prevent unnecessary tire wear caused by locking front wheels.

A potential lock up of the front wheels are indicated by a flashing LED on the display.

If the front brake pressure is more than 10 bar (145 psi) and the speed of the left front wheel is less than that of the left rear wheel by 20 kph (12 mph), the top left warning light comes on (6.6.7.10).

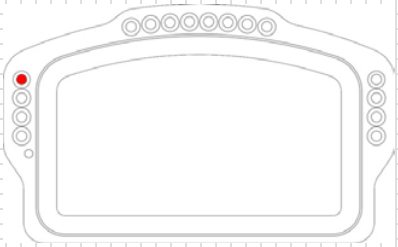

6.6.7.10

If the front brake pressure is more than 10 bar (145 psi) and the speed of the right front wheel is less than the speed of the right rear wheel by 20 kph (12 mph), the top right warning light comes on (6.6.7.11).

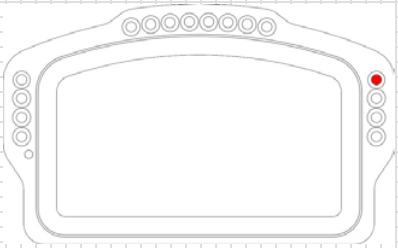

6.6.7.11

Other indicator lights on the display

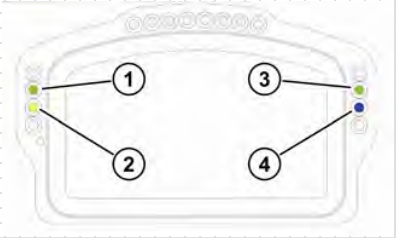

6.6.7.12

- Left indicator: the green LED (1) flashes.
- Right indicator: the green LED (3) flashes.
- Warning lights: the green LED´s (1) and (3) flash.
- Driving lights: the blue LED (4) lights, the LED (4) flashes in case of a malfunction e.g. the right headlight is defective.
- Engine control lamp: the yellow LED (2) will appear in case of an error. The information comes directly from the engine ECU

Map Page

The map is a bmp-file of 800x480 aspect ratio and is configured by Pi Toolset. If a new bmp-file is loaded then this is displayed when the ICD is next power cycled. This feature is to allow maps or other instructions to be displayed to the driver.

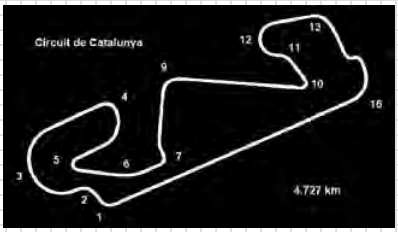

6.6.7.13

Downloaded from www.Manualslib.com manuals search engine

6.7 Lights

The 911 GT3 Cup (991) is equipped with xenon headlights and front lights incl. daytime running lights, position, and indicator lights in LED technology. The headlight leveling control is without function. The headlight leveling control motor is only used for fixing the xenon lens.

The rear lights are also designed in LED technology. The fog lamps are also without function.

WARNING

Caution when working on xenon lights. The system is under high voltage.

The system has to be de-energized before working on xenon lights. Risk of electric shock.

6.7.1

6.7.2

Xenon (low beam light)

6.7.3

Middle rear light

The middle rear light is used as rain lights. It is actuated by the “Rear Fog” switch in the center console.

Downloaded from www.Manualslib.com manuals search engine

6.8 Data bus system

Four CAN bus systems and two LIN bus systems are used in the vehicle.

Data bus overview:

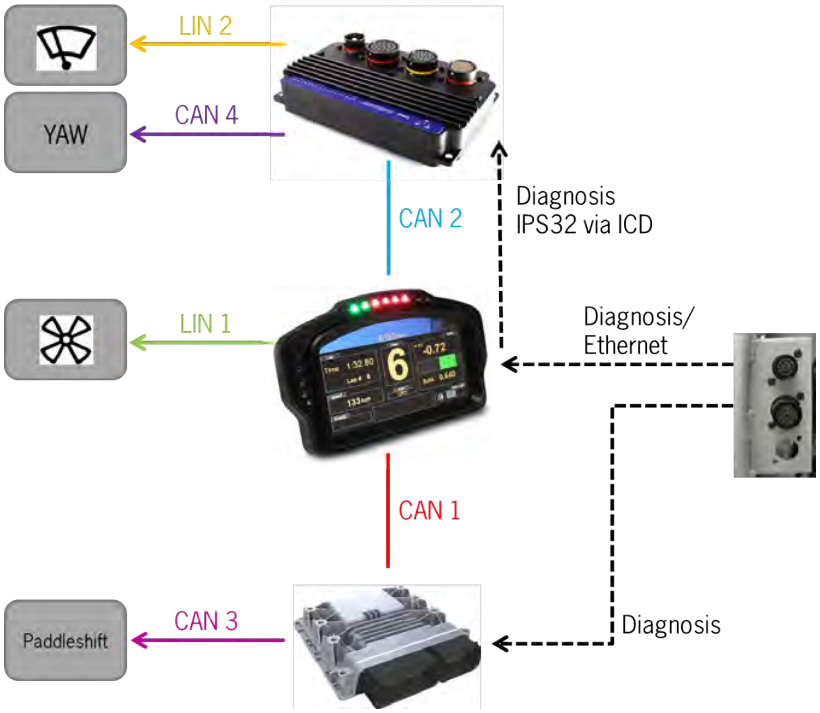

6.8.1

CAN 1 (highspeed)	Communication between engine ECU and display (1Mbit/s)
CAN 2 (highspeed)	Communication between electrical system control unit and display (1 Mbit/s)
CAN 3 (lowspeed)	Communication between engine ECU and Paddleshift
CAN 4 (highspeed)	Acceleration and yaw sensor (500 kbit/s)
LIN 1	Fan activation (screen or driver) on the display
LIN 2	Wiper activation via electrical system control unit

Downloaded from www.Manualslib.com manuals search engine

6.9 Wiring harness

For the 911 GT3 Cup (991), a wiring harness that runs along the center tunnel from the front to the back has been specially developed for racing use. The wiring harness is separated as follows:

Engine	Porsche Spare part number: 997 607 012 99
Vehicle cable harness	Porsche Spare part number: 991 612 101 8A
Front axle wheel carrier	Porsche Spare part number: 991 612 946 8A
Rear axle wheel carrier	Porsche Spare part number: 991 612 948 8A
Front section	Porsche Spare part number: 991 612 301 8A
Fuel tank	Porsche Spare part number: 991 201 697 8A
Starter cable B+	Porsche Spare part number: 991 612 395 8A
Steering	Porsche Spare part number: 991 612 830 8A

6.10 Ground connection roof antenna

Since the roof panel is bonded to the body, there is no electrically conductive connection with the bodywork. If an antenna is mounted on the roof, a ground connection must be made from the roof to the body. Therefore, you can use the stud in the back strut. (Figure 6.10.1).

6.10.1

Downloaded from www.Manualslib.com manuals search engine

6.11.1

6.11.2

6.11.3

1 Driver's footwell

2 Interior B-pillar top

3 Engine compartment front middle

4 Engine compartment rear left/right

6.11 Fire extinguisher

The fire-extinguishing system uses a liquid extinguishing agent. It consists of a two-chamber reservoir that stores the liquid extinguishing agent and turns it into gas when it is activated. This allows residue-free extinguishing. Two gas cartridges that are activated by a control unit are used as propellant. The contents of the extinguishing agent container have a mass of 2.25 kg (5 lb), which helps to keep the overall vehicle weight low. The extinguishing agent passes through three nozzles into the cockpit and through another three nozzles into the engine compartment. The system can be activated from the outside (6.11.2) and from the center console (6.11.3) by a pushbutton. The switch function can be tested. The system is powered by a 9 V block battery.

Contact address:

Fire Extinguisher Valve Company Ltd (FEV)
Unit 10 Ford Lane Business Park
Ford Nr Arundel West Sussex
BN18 OUZ
United Kingdom
Phone: +44(0) 12 43-55 55 66

Extinguishing nozzle positions

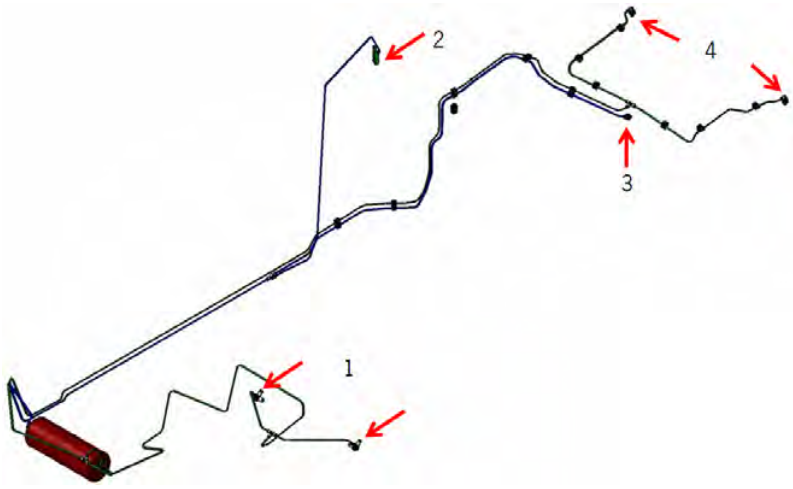

6.11.4

Downloaded from www.Manualslib.com manuals search engine

6.11.1 Testing the trigger switch

The switch test is performed on the fire extinguishing system control unit. Always follow the steps below to prevent unintended triggering of the system. The switch (2) has three positions.

Upper position: = Battery/Circuit test

Central position: = (OFF) The system is switched off

Lower position: = (ARMED if ON) The system is armed if the red LED will be ON. If either the wiring or firing detonator is faulty or the detonator is either not there or has already fired, then the LED will not light.

Testing the trigger switch:

Set the switch on the control unit to the upper position

The green LED lights up 1 sec. (battery is OK)

The system is in test mode and not active. The trigger switch on the center console and the outside trigger switch can now be actuated.

When pressing the switch inside/outside the yellow LED should be off. The LED lights steadily and goes out when you press the switch.

6.11.2 Battery change

The battery is located behind a cover in the control unit (1). It is a 9 V block battery. Turn off the system when changing the batter.

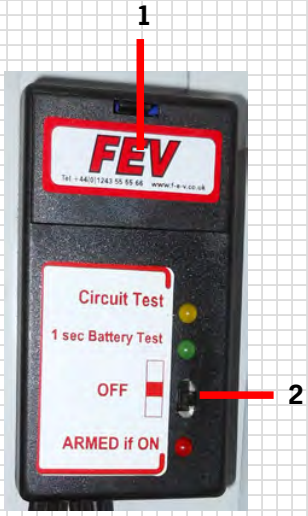

6.11.1.1

Downloaded from www.Manualslib.com manuals search engine

6.12 Driver Control Systems

6.12.1 Steering wheel

The most important functions can be comfortably carried out with the press of a button directly from the steering wheel.

6.12.1.1

6.12.1.2

The steering wheel is attached to the steering column by means of a quick release coupling.

Pushbutton functions on the steering wheel:

Wiper	= Push button for the wipers, 2-stage
High Beam	= High beam flash
Radio	= Radio system
Mark	= Marking for data recording
Reverse	= Reverse gear
Alarm	= Acknowledge button to confirm display messages
Display	= Selection of individual display pages
Pit Speed	= Pit speed

Downloaded from www.Manualslib.com manuals search engine

6.12.2 Center console

Switches and pushbuttons are located in the center console. Their functions are described below.

Main	= Power supply 4 to 6 sec. overrun
Fuel Pump Service	= High pressure pump switch
Intank Pump Service	= Intank pump switch
Ignition	= Ignition
Light	= Low beam light with daytime running light
Rear Fog Light	= Middle rear light
Flasher	= Flasher left/right
Fan	= Fan
Screen/Driver	= Fan position windshield/driver
Emergency Gear Box	= Press only if shifting gears is no longer possible. Pressing the button activates an emergency mode to drive to the pit
Hazard	= Warning lights
Fire Ex.	= Fire extinguishing system

6.12.2.1

Downloaded from www.Manualslib.com manuals search engine

6.12.3.1

6.12.4.1

6.12.3 Windscreen wiper

The wiper motor is activated by the display via the LIN.

A green push button is provided on the steering wheel. The wiper motor has two stages: slow and fast.

Switching logic:

Press once short:	one time on
Press once longer 1,5 second:	continuity wiping
Press once short:	off

6.12.4 Interior fan switch

The On/Off switch is located in the center console. The fan speed is not adjustable. Another switch in the center console controls the air distribution. There are two options: “Screen” (windscreen) and “Driver”. The fan is used to cool the driver or to ensure a clear view when the windshield is misting up.

Downloaded from www.Manualslib.com manuals search engine

7 Maintenance

7.1 Engine

7.1.1 Oil level measurement using the dipstick

Conditions for the correct measurement:

- The vehicle should be on a flat, even surface
- Engine at operating temperature, oil temperature 80 °C (176 °F)
- Idle speed

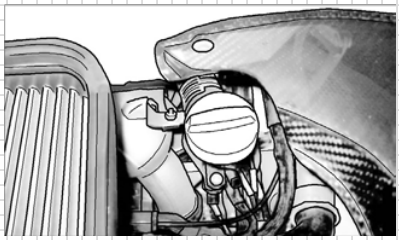

7.1.1.1

Follow the steps below for correct measuring:

- Remove filler neck cap (7.1.1.1)

NOTE The dipstick (7.1.1.2) is located behind the cap in the filler neck

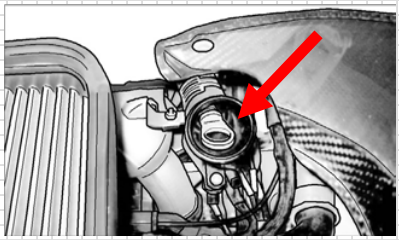

7.1.1.2

- Pull the dipstick out of the filler neck and wipe the oil off the dipstick using a clean cloth
- Introduce the dipstick again into the filler neck
- Pull the dipstick again out of the oil reservoir and read the oil level

NOTE The difference between MIN and MAX is 1 liter (1.06 qt). (7.1.1.3) Fill in half liters (0.53 qt) of engine oil!

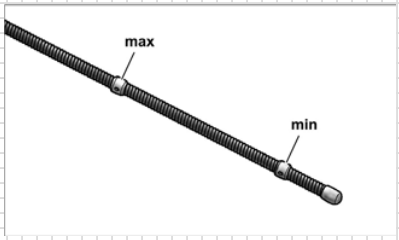

7.1.1.3

Downloaded from www.Manualslib.com manuals search engine

7.1.2 Oil level measurement with display

A digital oil level indicator (7.1.2.1) is optionally available Porsche spare parts number: 997.641.139.9A. Adapter cable Porsche spare parts number: 991:612:334.8A

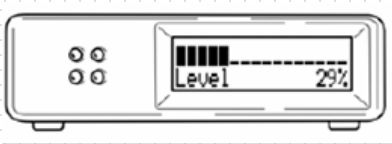

7.1.2.1

The vehicle cable harness is already prepared for this indicator. On the vehicle itself, the connector for the oil level indicator is provided near the rear side window on the right side of the vehicle.

WARNING

According to the digital display, the system filling level should not exceed 90 %.

7.1.3 Changing the engine oil

Warm up the engine to an oil temperature of 80 °C (176 °F) and then turn off the engine.

NOTE

- When changing the oil filter: Open the oil filler neck cover & release and pull out the oil filter housing slightly.
- Without changing the oil filter: Open the oil filler neck cover.

This guarantees that the oil flows out without bubbles and the oil system is sufficiently drained.

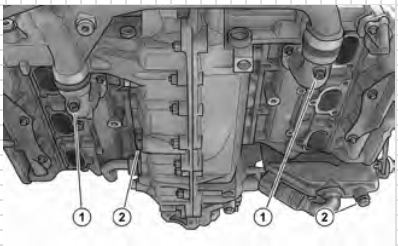

7.1.3.1

- Remove the drain plugs on the oil tank and on the crankcase (item 2 in picture 7.1.3.1)
- Allow the oil to run into a suitable container
- Use new sealing rings and tighten the drain plugs (50 Nm (37 lb-ft) tightening torque)
- Change the oil filter
- Fill in oil -> see filling quantities

Downloaded from www.Manualslib.com manuals search engine

7.1.4 Refilling engine oil

- New engine: 11.0 l (11.6 qt)
- Incl. oil filter change: 8.3 l (8.8 qt)
- Without oil filter change: 8.1 l (8.6 qt)

Consumables:

Porsche spare part number: 996.107.225.53	Oil filter element
Porsche spare part number: 900.123.010.20	Oil tank seal ring
Porsche spare part number: 900.123.118.30	Crankcase seal ring

7.1.5 Oil specification

Mobil 1 0W – 40

Downloaded from www.Manualslib.com manuals search engine

7.1.6 Engine cooling system

Periodically remove dirt from the radiators and carry out a visual inspection for damage.

NOTE

For support races to the FIA Formula 1 Worldchampionship, the coolant is to be substituted as described below: approx. 20 liters (21.1 qt) of water plus min. 2 liters (2.1 qt) of corrosion protection, spare part no. 997.106.907.90

Filling quantity: 22 liters (23.2 qts.)

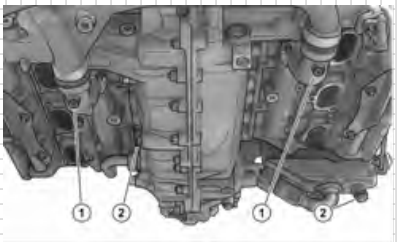

7.1.6.1

Draining the coolant system

- Open the coolant compensating tank cover
- Remove the drain plugs (item 1 in picture 7.1.6.1)
- Allow the coolant to run into suitable containers
- Provide the drain plugs with new seal rings and screw tight (10 Nm (7.4 lb-ft) tightening torque)

Consumables:

Porsche spare part number: 900.123.144.30 Coolant circuit seal ring

Downloaded from www.Manualslib.com manuals search engine

Filling the cooling system

- Disconnect the quick coupling in the engine compartment and connect the open ends to the two couplings of the filling device
- Switch on the pump; the system is being filled
- The device should be turned on for ten minutes to ensure proper filling and venting
- Allow the engine to warm up (80 °C / 176 °F) and, if required, fill the container up to the maximum level using the connected filling device
- The compensating tank cover must be closed during the entire procedure

NOTE

Never open the cover of the coolant compensating tank after reaching the operating temperature. The system pressure would escape and will not be built up again as the operating temperature has already been reached. This pressure is, however, required to increase the boiling point of the cooling water.

A special filling device should be used for filling the water system (7.1.6.2). This device is distributed by Sobek. The filling device includes an electric pump that pumps the cooling water from a tank into the system.

7.1.6.2

SOBEK Motorsporttechnik GmbH & Co.KG

Industriestraße 8

68542 Heddesheim

Tel.: +49 (0)62 03-40 43 90 0

Fax: +49 (0)62 03-40 43 91 8

E-Mail: info@sobek-motorsporttechnik.de

Downloaded from www.Manualslib.com manuals search engine

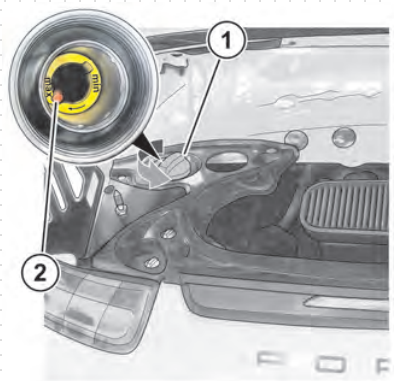

7.1.6.3

Checking the coolant level

If possible, open the compensating tank cap (1) only when the engine is cold. When opening the system while the engine is hot, air may penetrate into the system and impair the function. A float (2) indicating the fluid level is provided behind the cap. When the engine is cold, the fluid level should be between min and max. Place the vehicle on a flat surface to ensure proper measurement.

WARNING

Caution when opening the system when the engine is hot. The system is under pressure! Risk of scalding!

Put a cloth over the cap and carefully open the cap.

7.1.7 Setting the valve timing

- Inlet camshaft timing 110° after TDC
- Exhaust camshaft timing 110° before TDC

Downloaded from www.Manualslib.com manuals search engine

7.1.8 Engine tightening torques

Component	Screw dimensions	Tightening torque [Nm]
Engine		
Engine mount to body	M10	65 (48 lb-ft)
Crankshaft and crankcase		
Connecting rod	M10 x 1.25	*1
Oil pump	M8	23 (17 lb-ft)
Crankshaft bolt/nut	M8	23 (17 lb-ft)
Pulley to crankshaft	M14 x 1.5	170 (125.4 lb-ft)
Sealing screw, pressure control and safety valve	M18 x 1.5	40 (29.5 lb-ft)
Crankcase oil drain plug	M20 x 1.5	50 (37 lb-ft)
Water drain plug cyl. 1-3	M10 x 1	10 (7.4 lb-ft)
Water drain plug cyl. 4-6	M10 x 1	10 (7.4 lb-ft)
Flywheel	M10	Refer to 1.8
Cylinder head		
Cylinder head bolt	M10	Refer to 1.7
Camshaft housing		
Camshaft housing to cylinder head	M8	Pre-tightening: 23 (17 lb-ft) Final tightening: 28 (20.7 lb-ft)
Knock sensor	M8	23 (17 lb-ft)
Spark plugs	M12 x 1.25	22 (16.2 lb-ft)
Do not install spark plugs more than five times		
Camshaft sprocket to camshaft	M12 x 1.5	30 (22 lb-ft) + 90°
Chain case on crankcase	M8	23 (17 lb-ft)
Valve cover on camshaft housing	M6	9.7 (7.2 lb-ft)
Camshaft bearing cover	M6	13 (9.6 lb-ft)
Auxiliary units		
Pulley on generator		55 (40.6 lb-ft)
Lambda sensor	M18 x 1.5	50 (37 lb-ft)
Flywheel coupling	M8 x 45	33 (24.3 lb-ft)
Oil drain plug on oil tank	M20 x 1.5	60 (44.3 lb-ft)

*1=Pre-tightening 30 Nm +/- 3 Nm (22 ± 3 lb-ft)

Final tightening 62° +/-2° rotation angle

Resulting expansion 0.200 +/- 0.015 mm (0.008 ± 0.0006")

7.1.9 Engine runtime

NOTE

The 911 GT3 Cup (991) engine is designed for a maximum speed of 8500 rpm, the service interval is **50 hours**.

Downloaded from www.Manualslib.com manuals search engine

7.2 Fuel system

7.2.1 Fuel

Superplus, unleaded (min. 98 ROZ)

NOTE

The ethanol content in the fuel may not exceed 26 % (E26).

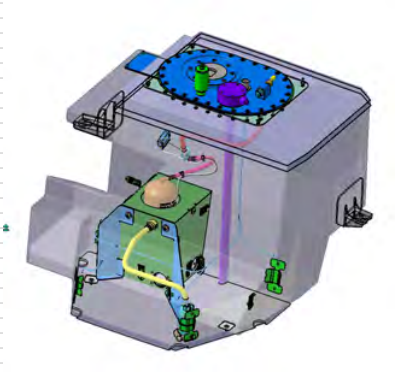

7.2.1.1

7.2.2 Fuel pump

The fuel pump is located in the tank.

7.2.3 Fuel extraction

A defueling valve is provided close to the tank filler neck to empty the fuel tank. Use a special hose with a quick disconnect coupling for defueling. Connect the quick disconnect coupling to the nipple of the tank filler neck in the front section. To start the process, the fuel pump switches located on the center console have to be in position **„Fuel Pump Service"**. The fuel pumps are is then powered for 120 seconds. If this is not enough time to completely drain the fuel tank, turn the switches again from the middle position (pump off) to the "Service" position. Keep the fuel in suitable containers!

Downloaded from www.Manualslib.com manuals search engine

Switching logic of the fuel pump switches (center console):

Switch position	up	Defueling position
Switch position	center	Off
Switch position	down	Normal operation

Auxiliary material:

Porsche spare part number: 997.110.355.91 Fuel extraction hose

NOTE

The fuel pump should not run dry as this may cause damage to the pump.

NOTE

Ensure that the coupling fits tightly. The hose end has to lead into a suitable container.

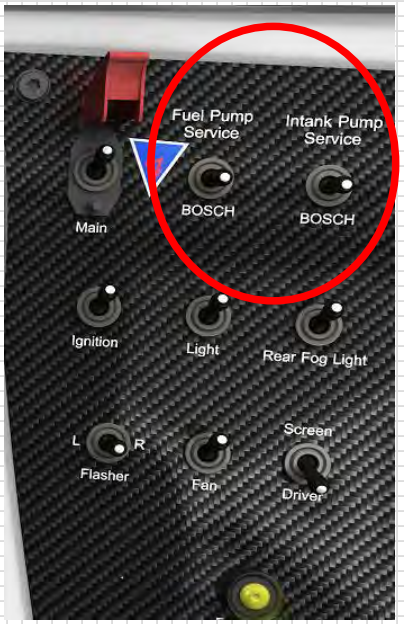

7.2.3.1

Downloaded from www.Manualslib.com manuals search engine

7.3 Power transmission

7.3.1 Gearbox

The running time is **30 hours**.

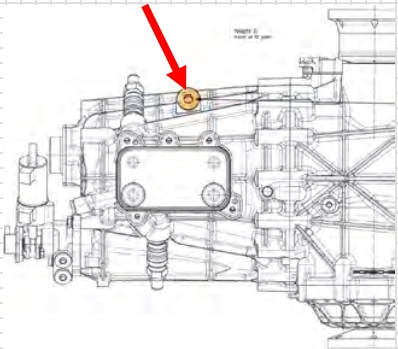

7.3.1.1

Transmission oil fill quantity

For a rebuild, the fill quantity is 3 liters (3.2 qt).

Filling:

- Place the gearbox on a flat and even surface
- Slowly fill transmission oil in the inclined filler neck

Oil specifications

Mobilube 1SHC75W90

Downloaded from www.Manualslib.com manuals search engine

7.3.2 Clutch

Check the following during any inspection:

- Check clutch basket, hub, sintered disk for cracks
- Check spring tongues for wear
- Check housing lugs for wear
- New sintered lining 3.40 mm (0.13”)
- Replace at 3.00 mm (0.12”)

Installation

- Make sure that the star shapes of the multiple-disk clutch sintered disks are aligned if possible.
- Lightly grease the gear teeth and move the clutch disks back and forth on the drive shaft until the hub moves smoothly on the shaft, remove excess grease.
- No grease should get on the clutch linings.

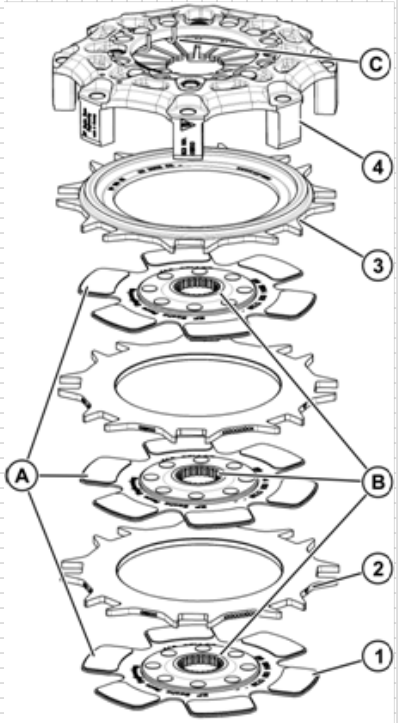

7.3.2.1

Downloaded from www.Manualslib.com manuals search engine

Clutch actuation

Racing Brake Fluid-325° from Performance Friction Brakes is used as clutch fluid.

Consumables:

Porsche spare part number: 991.355.960.8A Brake fluid

Porsche recommends bleeding the system after each practice and changing the fluid after each race.

- Fill quantity: approx. 500 ml (17 oz)

Bleeding procedure:

- Depress the clutch pedal 2 to 3 times and keep it depressed
- Shortly open the vent valve – the clutch pedal has to be depressed and should not be released
- Close the vent valve again
- Repeat this procedure 2 to 3 times
- Check the fluid level on the fluid reservoir

Replacement:

- Remove the old fluid out of the reservoir and fill with new fluid
- Then proceed as for venting, perform the steps approx. 10 times and make sure that there is enough fluid in the reservoir

Downloaded from www.Manualslib.com manuals search engine

Central release mechanism

NOTE

When handling the central release mechanism seal, be sure to avoid any contact with transmission oil. Otherwise, the seal may swell, which, in the worst case, may cause a loss of function. Only use the Sachs special tool to fit the seal.

- Also be sure to remove oil residues from your hands and the working environment before handling the seal (this also applies to engine oil and other oils).
- According to the manufacturer, the seal is compatible with hydraulic fluids with DOT4 and DOT5.1 specifications.

7.3.3 Paddle shift

Small Service:

- Once p.a.
- Max. 10.000 km
- Max. 10 h compressor run time

Big Service:

- Every two years
- Max 20.000 km
- Max. 20 h compressor run time

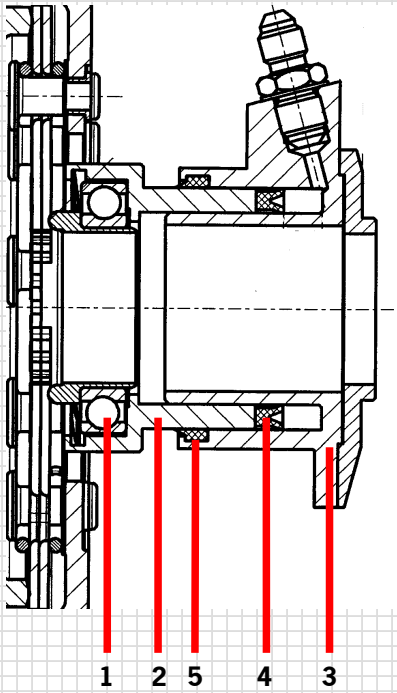

7.3.2.2

1 Thrust bearing
2 Piston
3 Housing
4 Seal
5 Dust protection ring

Downloaded from www.Manualslib.com manuals search engine

7.3.4 Drive shafts

It is recommended breaking in drive shafts on new vehicles or newly fitted drive shafts for about **50 km** (31 miles) with reduced load and at max. **200 km/h (124 mph)**. The load on the drive shaft should be continuously increased, this helps to prolong the lifetime of the joints.

Note

Due the extremely high load on the drive shaft, these should be checked regularly

- The clearance can be checked by turning the drive shaft from hand. If the clearance obviously gone up the cage is heavily worn. In this case the drive shaft should be replaced.
- The easy movement of the joints is checked by push and pulls the drive shaft. If the drive shaft moves tight it might degrees the joint temperature and the shaft is to replace.

- Only use HT 1 LF grease for lubrication when overhauling the drive shafts
- Do not interchange used drive shafts left-right

Grease quantity for joint on wheel side: 150 g (5.3 oz)

Grease quantity for joint on gearbox side: 120 g (4.2 oz)

Porsche spare part no.: 000.043.110.01 grease (100 g / 3.5 oz)

Torque Tightening Specifications

1 Tighten all bolts to 30 Nm (22.1 lb-ft) in the specified order

2 Tighten all bolts to 60 Nm (44.3 lb-ft) in the specified order

3 Tighten all bolts to 90 Nm (66.4 lb-ft) in the specified order

4 Lightly oil the bolts. Follow these tightening instructions whenever the drive shaft bolt connections have been untightened.

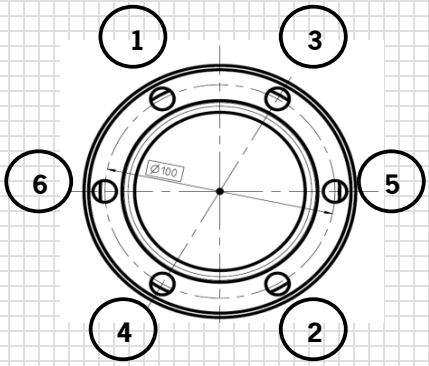

7.3.4.1

Downloaded from www.Manualslib.com manuals search engine

7.4 Chassis

7.4.1 Wheel nut

Porsche Motorsport also recommends replacing the wheel nuts during a long distance race (approx. 6 hours run time). The replacement is required for checking and regenerating the used wheel bolts. Regenerating includes cleaning of the threads, visual inspection for damage and re-greasing with aluminum paste. Also grease the nut-rim contact surface. Proceed as follows to prevent the wheel nuts from settling: Tighten the new part 3 to 4 times using an impact wrench (500 – 520 Nm (368.8 – 383.5 lb-ft)), then untighten and regrease.

Consumables:

Porsche spare part no.: 000.043.020.00 Optimol Paste TA

Downloaded from www.Manualslib.com manuals search engine

7.4.2 Locking piece

The locking pieces are used as the locking mechanism for the wheel nuts. Make sure that they can be moved freely. Grease the mechanism using “Optimol Paste”.

Consumables:

Porsche spare part no.: 000.043.004.00 Optimol Paste HAT

The locking mechanism may be removed from the hub for maintenance and cleaning. Proceed as follows:

- Press the locking pieces into the hub (blue arrow)
- Press the locking pins into the hub using a thin object (yellow arrow)
- Pull the mechanism approx. 5 mm (0.2”) out of the hub

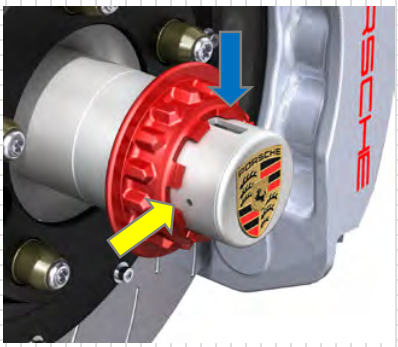

7.4.2.1

NOTE Before completely removing the unit, put a stable bag or a strong cloth around the hub, providing protection against flying parts!

- Put the protection over the hub
- Completely remove the mechanism from the hub

WARNING Risk of injury when removing the unit due to the strong spring preload.

Downloaded from www.Manualslib.com manuals search engine

7.4.3 Wheel bearings

Regularly check the tolerance in the wheel bearings. While one person holds the steering wheel, a second person turns the wheel as shown in the illustration below.

- Horizontal tolerance
- Vertical tolerance

Proceed in the same way to check the dome bearing and the suspension arm. Check the dome bearing by means of vertical movements.

7.4.3.1

7.4.4 Wheel hub

The wheel hub is a reinforced racing wheel hub with a central locking mechanism. Make sure that the retaining keys of the central lock are free to move.

7.4.5 Wheel rim

Visual inspection for cracks and deformation

Downloaded from www.Manualslib.com manuals search engine

7.4.6 Brake system

Brake pad wear limit:

The wear limit is reached when the pad has been worn down to the bottom of the slot (7.4.6.1).

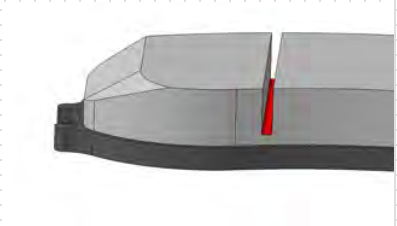

7.4.6.1

Brake Disk Wear Limit:

The wear limit is reached when the disk has been worn down to the bottom of the slot (7.4.6.2). The disk should also be replaced if there are cracks up to the edge of the disk.

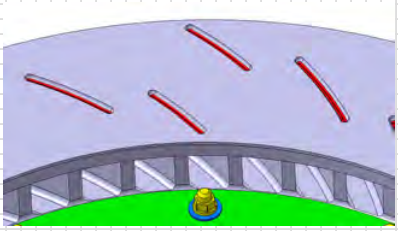

7.4.6.2

7.4.7 Replacing the piston seal rings

Dismounting

- Remove the caliper from the wheel carrier
- Place a piece of wood in the caliper to prevent the piston from falling out
- Press the brake piston outwards with low air pressure

WARNING Do not put your fingers between the brake pistons. Risk of crushing!

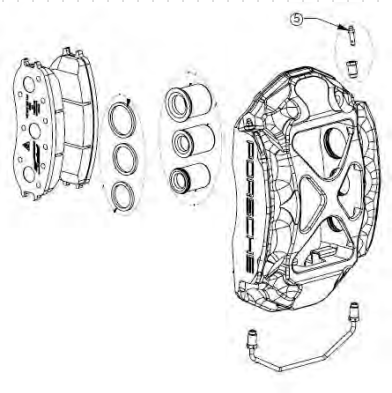

7.4.7.1

- Completely pull the brake pistons out of the caliper by hand
- Clean all components and remove any dirt (brake dust)
- Check the holes and sealing grooves for damage. Replace the caliper if any damage is detected

Downloaded from www.Manualslib.com manuals search engine

Installation

- The brake fluid can be used as assembly lubricant; wet pistons and seals with brake fluid
- When inserting the pistons into the holes, a slight resistance is caused by the seals (normal)
- Place the piece of wood again in the caliper
- Pressurize the brake caliper with low air pressure a few times to ensure that the seals are properly seated
- Mount the caliper again on the wheel carrier
- Vent the brake system

Brake system cooling channels

Carry out a visual inspection for damage and remove any impurities and foreign particles in the channels.

Brake fluid

- It is recommended venting the system after each practice and changing the fluid after each race
- Use the brake fluid from Performance Friction Brakes, Racing Brake Fluid-325° (DOT 4)
- Three persons are required.
- Fill quantity: approx. 1,000 ml (1.06 qt)

Downloaded from www.Manualslib.com manuals search engine

Proceed as follows for changing the brake fluid:

1. Remove the brake fluid from the brake fluid reservoir of the two master cylinders using a syringe
2. Pour in new brake fluid

Flushing:

3. Build up pressure with the brake pedal
4. Open the front axle and rear axle brake bleeder valves simultaneously and close them again
5. Only release the brake pedal when the bleeder valves have been closed. Build up new pressure with the brake pedal.
6. Repeat the process and make sure that there is enough brake fluid in the reservoir.
7. Perform flushing operation on both valves of a caliper (order of no importance)

7.4.8 Shock absorber/spring

Clean the shock absorber/spring unit after each practice or race and carry out a visual inspection for damage and leaks.

7.4.9 Anti-roll bar

Check all moving components for free movement. Check the bearings of the anti-roll bar connection and suspension for inadmissible play.

Downloaded from www.Manualslib.com manuals search engine

7.4.10 Steering system

Reservoir capacity: 0.65 liter (0.7 qt)

Bleeding the steering system

Venting should be performed by two persons.

For filling the entire system, e.g. after replacing the steering system, lines or a high loss of fluid, start the engine and stop it again immediately. The fluid level in the container drops rapidly and it should be ensured that “Pentosin” (000.043.206.56) is continuously replenished while the engine is running. During this procedure, the reservoir should never run dry.

The electric hydraulic pump operates only while the engine is running. The compensating tank must be filled before starting the engine to vent the system. Check the fluid level in the tank immediately after starting the engine.

Turn the steering wheel quickly from one stop to the other, allowing the air in the cylinders to escape. Do not turn the steering wheel with increased force against the end stop, in order to prevent unnecessary pressure peaks in the system.

The fluid level should be constantly monitored during venting. If the fluid level drops, "Pentosin" has to be replenished until the level no longer changes and no air bubbles are visible on the surface of the fluid when setting the steering.

Checking the fluid level

The fluid level is checked with the dipstick located in the container lid, while the pump is running.

Downloaded from www.Manualslib.com manuals search engine

Quick release coupling

- Check the steering wheel for play
- Clean and grease the mounting points of the quick release coupling

The picture (7.4.10.1) shows the locking pins of the quick release coupling.

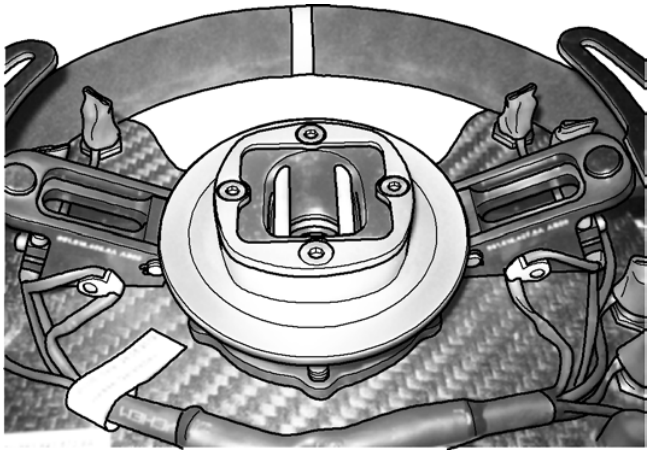

7.4.10.1

The picture (7.4.10.2) shows the open quick release coupling (coupling ring pulled out). Clean and grease the lateral sliding surfaces.

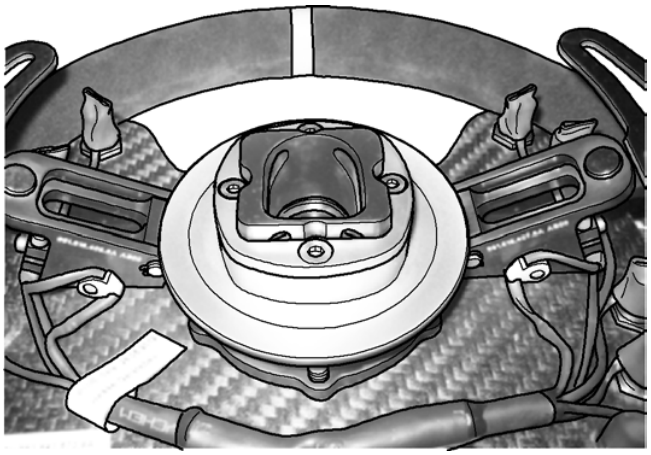

7.4.10.2

Downloaded from www.Manualslib.com manuals search engine

7.5 Body

- Check the body for cracks and damage near the suspension and engine/gearbox mounting points
- Check wing support brackets for cracks and damage
- Check seat and seat rail for damage, tightness and function

7.5.1 Airjack system

Porsche Motorsport recommends overhauling after two years or 2,000 strokes.

- Only clean air jack piston with silicone grease or spray
- Regularly check the air jacks for mechanical damage

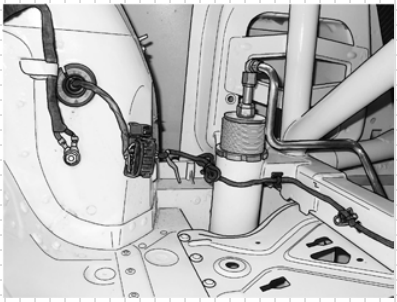

7.5.1

Other maintenance work is only to be performed by the manufacturer! Refer to the appendix for the manufacturer's detailed information material.

Downloaded from www.Manualslib.com manuals search engine

7.6 Electrical system

- Regularly check connectors for tight fit and corrosion

7.6.1 Checks after wet races

- Remove moisture from the interior
- Check electrical connectors for moisture, remove if required

Downloaded from www.Manualslib.com manuals search engine

7.7 Maintenance intervals

7.7.1 After 200 km (124 mi) or first test drive

- Visual inspection of all systems, lines, etc. for leaks, damage or chafing
- Check the specified tightening torque of all safety critical bolts
- Check all wheel suspension bolts
- Check the drive shafts
- Check the engine suspension
- Check the gearbox suspension

7.7.2 After each session

- Visual inspection of all systems, lines, etc. for leaks, damage or chafing
- Check the specified tightening torque of all safety critical bolts
- Check the shock absorbers for leaks
- Fuel extraction and determination of fuel consumption
- Check all wheel suspension joints for play
- Clean the radiators
- Remove dust and rubber abrasion from the brake disks and calipers
- Vent the brake system
- Vent the clutch (1x per race weekend)
- Clean driver's foot space and check for functionality
- Clean and check wheel nut lock
- Check the oil level
- Check drive shaft sleeve for damage
- Check steering system sleeve for damage
- Check all systems for leaks

Downloaded from www.Manualslib.com manuals search engine

7.7.3 After each weekend (sprint race)

In addition to 7.7.2:

- Engine oil and filter change (after „heat race“ engine oil temperature > 140 °C (284 °F))
- Check compression and pressure loss of the individual cylinders
- Clean/replace air filter
- Change brake fluid
- Check balance beam setting
- Clean balance beam system
- Change clutch fluid
- Check clutch wear
- Check wheel bearing clearance
- Check air jacks for tightness and leaks
- Check seats and seat belt
- Check fire extinguishing system
- Check Simmerring seal for leaks on flywheel and pulley side

7.7.4 After 3 – 4 race weekends (sprint races)

- Revise calipers
- Replace fuel filter and pump
- Have the shock absorbers overhauled
- Check drive shaft joints

7.7.5 After 30 hours run time

- Gearbox overhaul

7.7.6 After 50 hours run time

- Engine overhaul

Downloaded from www.Manualslib.com manuals search engine

7.8 Special tools 911 GT3 Cup (991)

Designation	Use	Company	Part number
Motor			
Angle-controlled wrench 3-60 Nm (2.2 – 44.25 lb-ft)		Stahlwille	96501606
Angle-controlled wrench 20-200 Nm (14.75 – 147.5 lb-ft)		Hazet	7292-2eTAC
Angle-controlled wrench 40-400 Nm (29.5 -295 lb-ft)		Hazet	7294-2eTAC
Cooling system adapter	Cooling system checking	Hazet	4800-12A
Power transmission			
Chassis			
Axle shaft pressing-off tool 9454		PAG	000.721.947.00
Axle shaft nut wrench socket 9471		PAG	000.721.947.10
Fork ring wrench ¼“	Brake nipple	Hazet	
Polygon head socket ¼“	Brake disk chamber	Hazet	
Unlock plier T40024	Brake pedal linkage	Matra	T40024
Hook wrench	Shocks	Sachs	00 1795 000 149
Hook wrench	Shocks	Sachs	00 1795 00 150
Exterior car body			
Air jack lock, front axle	Locking	Krontec	LL-91
Air jack lock, rear axle	Locking	Krontec	LL-90

Downloaded from www.Manualslib.com manuals search engine

Front axle Carlift	Vehicle lifting	Krontec	LL-30_CL_PP
Rear axle Carlift	Vehicle lifting	Krontec	LL-20_CL
Air gun		Krontec	LL-03
Tank filler neck		Sobek	
Fuel bottle		Krontec	
Windshield cutting tool KSA		KSA Toolsystems	SCS-500
Riveting tongs M5 + M6	Threaded nuts, threaded pins	Förch	
Rivet tongs 9399/1 threaded bolt, rough		PAG	000.721.939.91
Mouthpiece + threaded mandrel 9399/2		PAG	000.721.939.92
Rep. Tool for threaded bushes M12 x 1.25		PAG	000.721.984.33
Rep. Tool for threaded bushes M14 x 1.5		PAG	000.721.984.31
Rep. Tool for threaded bushes M14 x 1.5 10 mm deep		PAG	000.721.984.32
Rep. Tool for threaded bushes M16 x 1.5		PAG	000.721.984.30

Downloaded from www.Manualslib.com manuals search engine

7.9 Partner contacts

EDUARD WILLE GmbH & Co.KG

Lindenallee 27

42349 Wuppertal

Phone: +49 (0)202-47 91-0

Fax: +49 (0)202-47 91-200

E-Mail: info@stahlwille.de

HAZET-WERK

Postfach 100461

42804 Remscheid

Phone: +49 (0)21 91-79 23 75

E-Mail: info@hazet.de

SOBEK Motorsporttechnik GmbH & Co.KG

Industriestraße 8

68542 Heddesheim

Phone: +49 (0)62 03-40 43 90 0

Fax: +49 (0)62 03-40 43 91 8

E-Mail: info@sobek-motorsporttechnik.de

MATRA-Werke GmbH

Dieselstraße 6

63512 Hainburg

Phone: +49 (0)61 82-78 33-55 24

Fax: +49 (0)61 82-78 33-55 07

E-Mail: nicole.vinson@matra.de

Krontec Maschinenbau GmbH

Pommernstraße 33

93073 Neutraubling

www.krontec.de

Sachs

ZF Friedrichshafen AG

Röntgenstraße 2

97424 Schweinfurt

Downloaded from www.Manualslib.com manuals search engine

KSA Toolsystems GmbH

Werkstr. 14

77815 Bühl

Phone: +49 (0)72 23-28 18 24 7

Fax: +49 (0)72 23-28 18 24 6

E-Mail: info@ksa-toolsystems.de

Theo Förch GmbH & Co. KG

Theo-Förch-Straße 11-15

74196 NEUENSTADT

Phone: +49 71 39 95 18 0

Fax: +49 80 0-36 37 24 6

Internet www.foerch.com

Cosworth

Brookfield Technology Centre

Twentypence Road

Cottenham

Cambridge

CB24 8PS

United Kingdom

Telefon:

Porsche UK Support (Mobil Team):	+44 1604 598814
Porsche UK Support (Non Business Hours):	+44 1604 598809
Porsche US Support:	+1 (424) 250-1290 X 1290

Fax: +44 (0)19 54-25 36 01

E-Mail: Porsche.support@cosworth.com

MEGA-Line Racing ELECTRONIC GmbH

Haunersdorf Str. 3

D-93342 Saal a.d. Donau

Phone: +49 9441 6866-0

Fax: +49 9441 6866-11

E-Mail: info@mega-line.de

Downloaded from www.Manualslib.com manuals search engine