AXLE SYSTEM

PROBLEM SYMPTOMS TABLE

HINT:
Use the table below to help you find the cause of the problem. The numbers indicate the ranked order of probability of each of the possible causes. Check each part in the order suggested. If necessary, replace the applicable parts.

Symptom	Suspected area	See page
Vehicle unstable	1. Front wheel alignment	SP-2
	2. Rear wheel alignment	SP-10
	3. Steering linkage	-
	4. Hub bearing	AH-1
	5. Front stabilizer bar	SP-42
Front wheel shimmy	1. Wheels (Out of balance)	TW-2
	2. Front shock absorber	SP-18
	3. Hub bearing	AH-1
Rear wheel shimmy	1. Wheels (Out of balance)	TW-2
	2. Rear shock absorber	SP-55
	3. Hub bearing	AH-1

ON-VEHICLE INSPECTION

1. **REMOVE FRONT WHEEL**
2. **SEPARATE FRONT DISC BRAKE CALIPER ASSEMBLY (See page AH-6)**
3. **REMOVE FRONT DISC (See page BR-50)**
4. **INSPECT FRONT AXLE HUB BEARING**
   (a) Inspect the axle hub backlash.
   (1) Using a dial indicator, check the backlash near the center of the axle hub.
   Maximum:
   0.05 mm (0.0020 in.)
   If the backlash exceeds the maximum, replace the bearing.

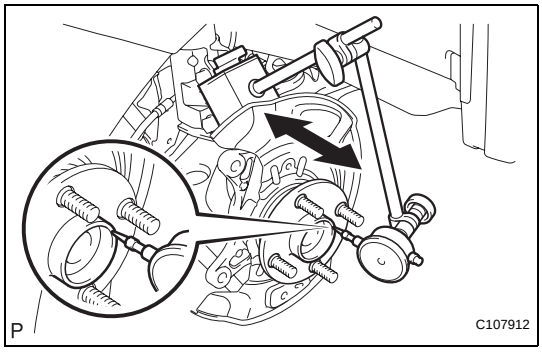

   (b) Inspect the axle hub runout.
   (1) Using a dial indicator, check the runout of the surface of the axle hub.
   Maximum:
   0.05 mm (0.0020 in.)
   If the runout exceeds the maximum, replace the bearing and axle hub.

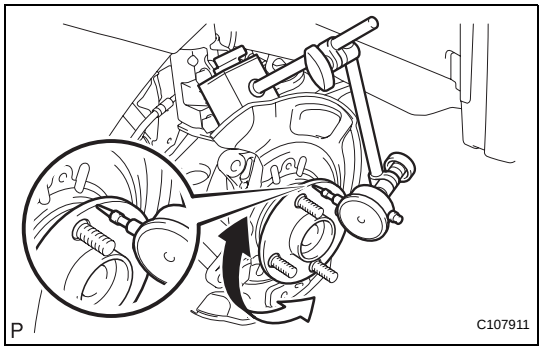

5. **INSTALL FRONT DISC (See page BR-52)**
6. **INSTALL FRONT DISC BRAKE CALIPER ASSEMBLY (See page AH-10)**
7. **INSTALL FRONT WHEEL**
   Torque: 103 N*m (1,050 kgf*cm, 76 ft.*lbf)
8. **REMOVE REAR WHEEL**
9. **REMOVE REAR BRAKE DRUM SUB-ASSEMBLY (See page BR-60)**
10. **INSPECT REAR AXLE HUB BEARING**
    (a) Inspect the axle hub and bearing backlash.
    (1) Using a dial indicator, check the backlash near the center of the axle hub.
    Maximum:
    0.05 mm (0.0020 in.)
    If the backlash exceeds the maximum, replace the axle hub and bearing.

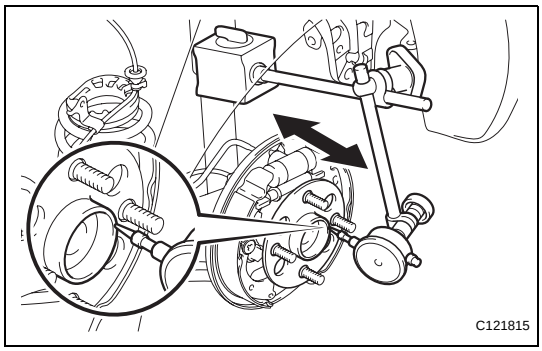

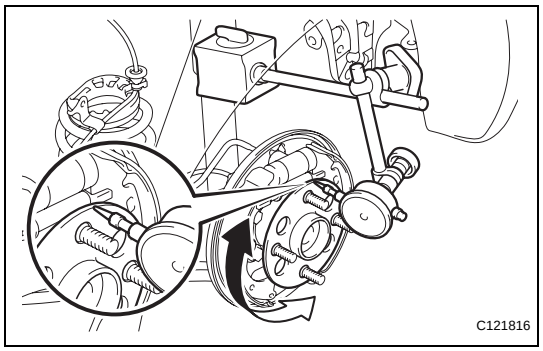

(b) Inspect the axle hub and bearing runout.

(1) Using a dial indicator, check the runout of the surface of the axle hub.

Maximum:

0.07 mm (0.0028 in.)

If the runout exceeds the maximum, replace the axle hub and bearing.

11. INSTALL REAR BRAKE DRUM SUB-ASSEMBLY

12. ADJUST REAR DRUM BRAKE SHOE CLEARANCE (See page BR-67)

13. INSTALL REAR WHEEL
Torque: 103 N*m (1,050 kgf*cm, 76 ft.*lbf)

FRONT AXLE HUB BOLT

COMPONENTS

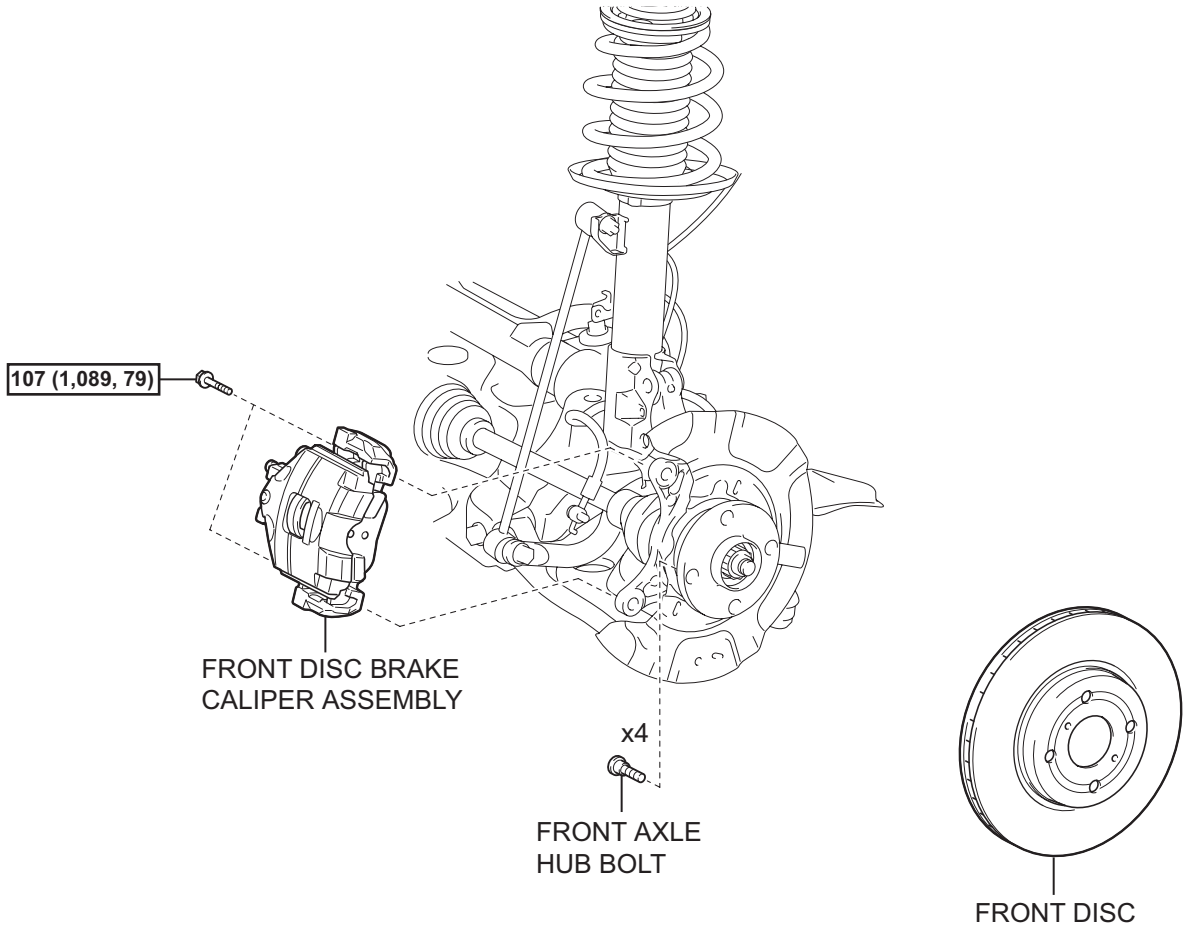

N*m (kgf*cm, ft*lbf) :Specified torque

P

C118252E01

REMOVAL

1. **REMOVE FRONT WHEEL**
2. **SEPARATE FRONT DISC BRAKE CALIPER ASSEMBLY (See page AH-6)**
3. **REMOVE FRONT DISC (See page BR-50)**
4. **REMOVE FRONT AXLE HUB BOLT**
   (a) Using SST and a screwdriver or the equivalent to hold the axle hub, remove the hub bolt.
   SST 09628-10011

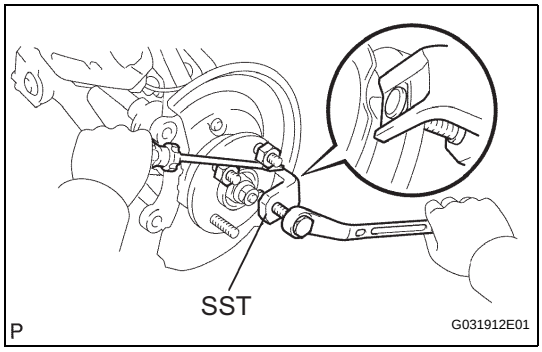

INSTALLATION

1. **INSTALL FRONT AXLE HUB BOLT**
   (a) Install the washer and the nut onto a new hub bolt, as shown in the illustration.
   (b) Using a screwdriver or the equivalent to hold the axle hub, install the hub bolt by tightening the nut.
2. **INSTALL FRONT DISC (See page BR-52)**
3. **INSTALL FRONT DISC BRAKE CALIPER ASSEMBLY (See page AH-10)**
4. **INSTALL FRONT WHEEL**
   Torque: 103 N*m (1,050 kgf*cm, 76 ft.*lbf)

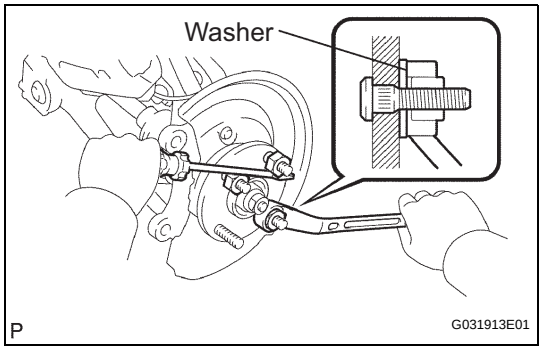

FRONT AXLE HUB

COMPONENTS

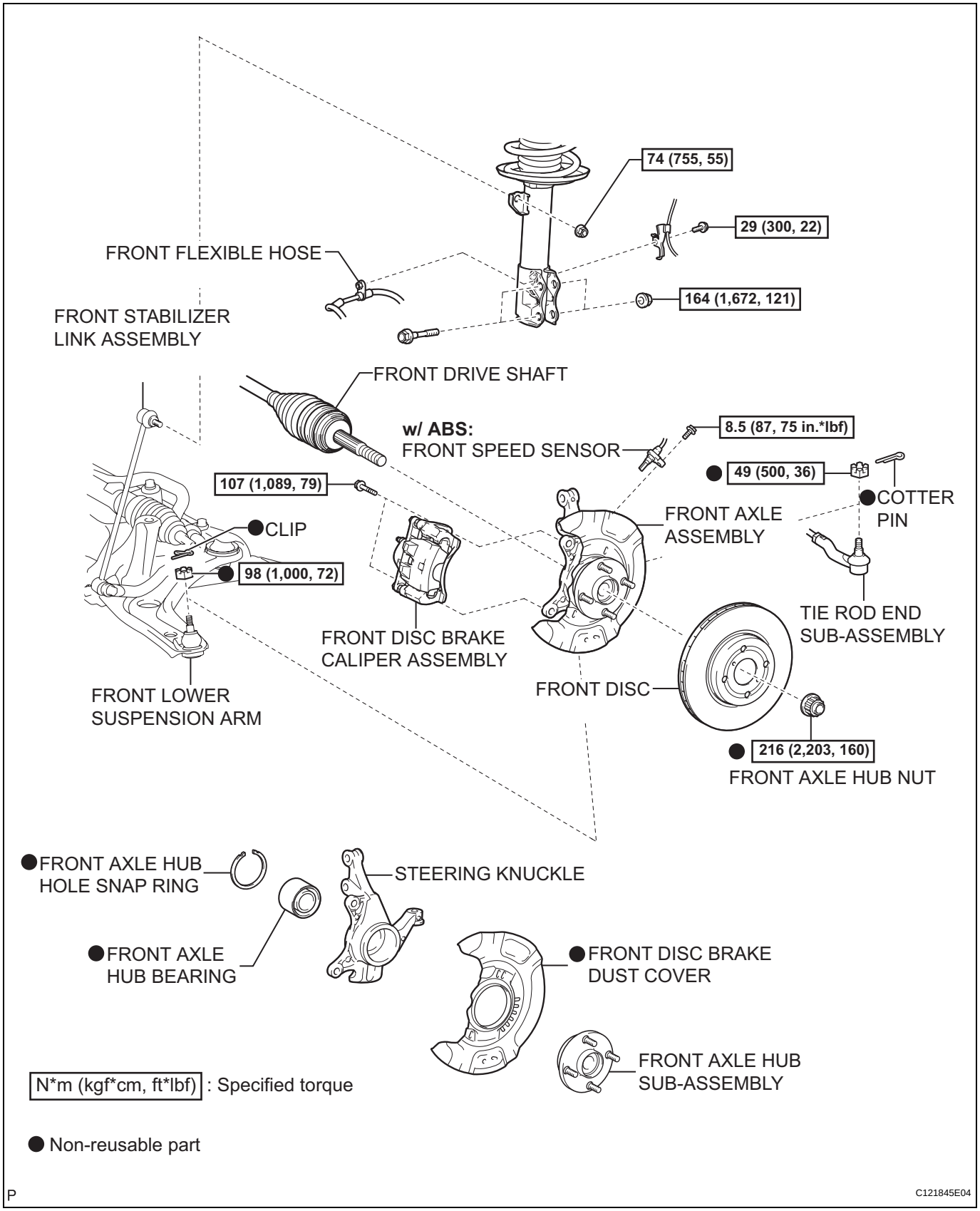

AH

REMOVAL

1. **DISCONNECT CABLE FROM NEGATIVE BATTERY TERMINAL**
2. **REMOVE FRONT WHEEL**
3. **REMOVE FRONT AXLE HUB NUT (See page DS-3)**
4. **SEPARATE FRONT SPEED SENSOR (w/ ABS) (See page DS-3)**
5. **SEPARATE FRONT DISC BRAKE CALIPER ASSEMBLY**
   (a) Remove the 2 bolts and separate the disc brake caliper from the steering knuckle.
   NOTICE:
   Hang the caliper using a piece of string or the equivalent.

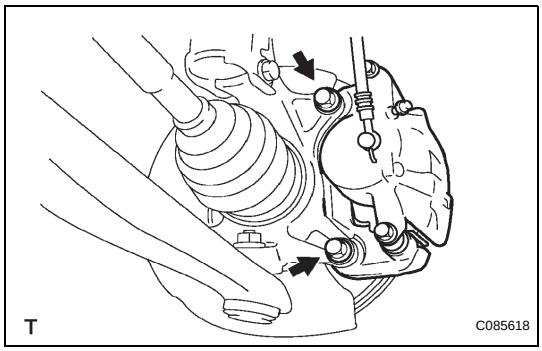

6. **REMOVE FRONT DISC (See page BR-50)**
7. **SEPARATE TIE ROD END SUB-ASSEMBLY (See page DS-3)**
8. **SEPARATE FRONT STABILIZER LINK ASSEMBLY (See page DS-4)**
9. **SEPARATE FRONT LOWER SUSPENSION ARM (See page DS-4)**
10. **SEPARATE FRONT AXLE ASSEMBLY**
    (a) Using a plastic hammer, tap the end of the drive shaft and disengage the fitting between the drive shaft and front axle.
    HINT:
    If it is difficult to disengage the fitting, tap the end of the drive shaft with a brass bar and hammer.
    (b) Push the front axle out of the vehicle to remove the drive shaft from the front axle.
    NOTICE:
    - **Do not push the front axle further out of the vehicle than is necessary.**
    - **Do not damage the outboard joint boot.**
    - **Do not damage the speed sensor rotor.**
    - **Suspend the drive shaft with a piece of string or the equivalent.**

    (c) Remove the 2 nuts and 2 bolts and remove the front axle assembly.
    HINT:
    Keep the nut from rotating while turning the bolt.

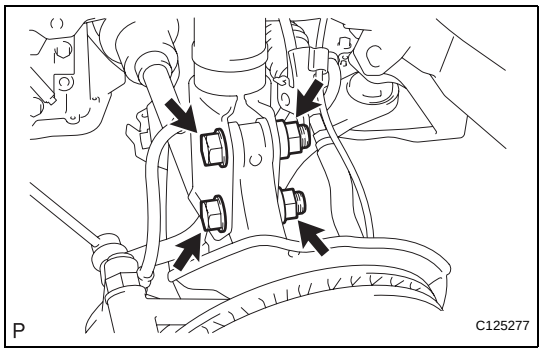

DISASSEMBLY

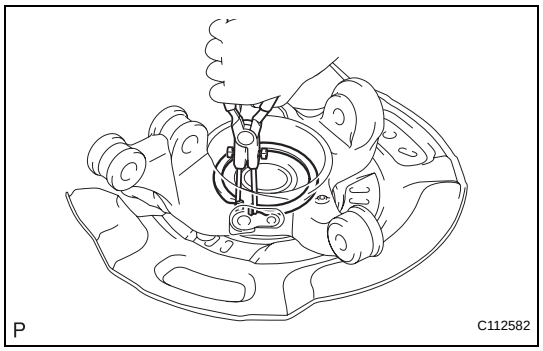

1. REMOVE FRONT AXLE HUB HOLE SNAP RING

(a) Using snap ring pliers, remove the hole snap ring.
NOTICE:
When removing the hole snap ring, do not damage the magnetic rotor surface.

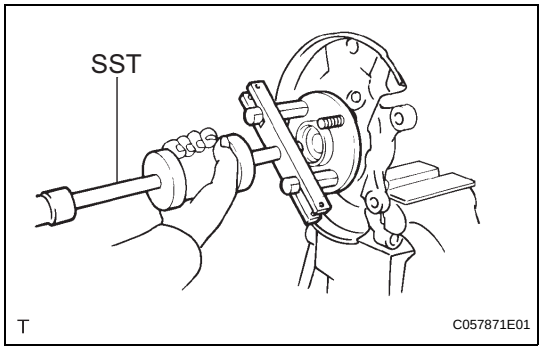

2. REMOVE FRONT AXLE HUB SUB-ASSEMBLY

(a) Fix the steering knuckle in a vise between aluminum plates.
NOTICE:
Do not overtighten the vise.

(b) Using SST, remove the axle hub.
SST 09520-00031

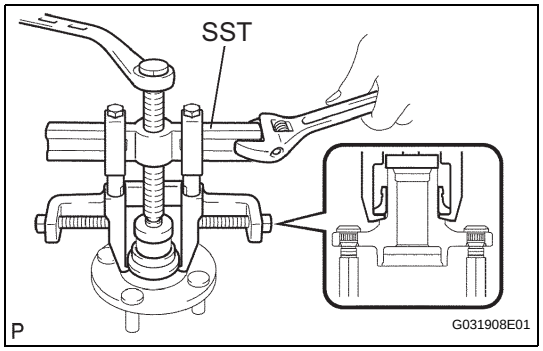

(c) Using SST, remove the hub bearing inner race from the axle hub.
SST 09950-40011 (09951-04020, 09952-04010, 09953-04020, 09954-04010, 09955-04011, 09957-04010, 09958-04011), 09950-60010 (09951-00370)

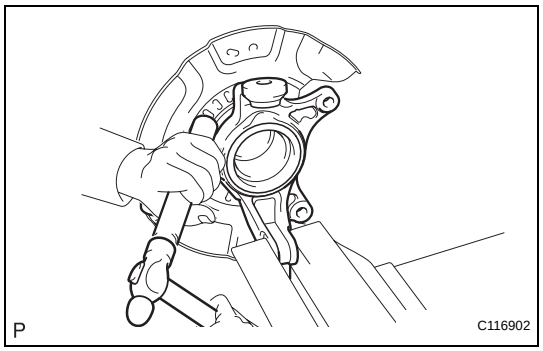

3. REMOVE FRONT DISC BRAKE DUST COVER

(a) Remove the dust cover by tapping the back side with a brass bar and hammer.

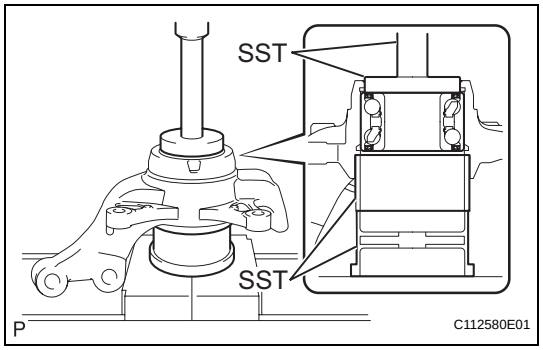

4. REMOVE FRONT AXLE HUB BEARING

(a) Install the removed hub bearing inner race onto the outer side of the hub bearing.

(b) Using SST and a press, remove the hub bearing from the steering knuckle.
SST 09223-15020, 09387-00041 (09387-02010), 09950-60010 (09951-00630), 09950-70010 (09951-07100)

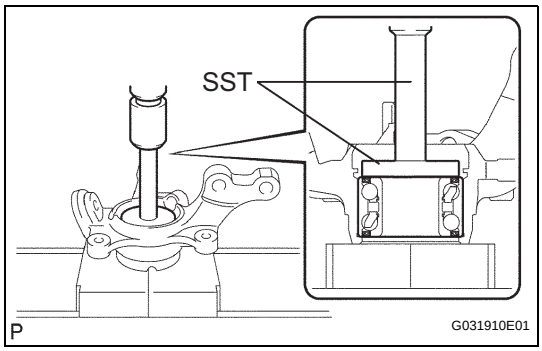

REASSEMBLY

1. INSTALL FRONT AXLE HUB BEARING

(a) Using SST and a press, insert a new hub bearing, with its magnetic rotor side facing the inside of the vehicle, until it reaches the end of the steering knuckle.

SST 09950-60020 (09951-00710), 09950-70010 (09951-07100)

NOTICE:

- **Do not remove the inner race because the hub bearing is built into the oil seal.**
- **Do not use bearings that have been removed.**
- **Do not wipe off any grease that has been applied to new bearings.**
- **Do not bring magnets close to the magnetic rotor surface of the bearing.**
- **Keep the magnetic rotor surface of the bearing free of foreign matter.**

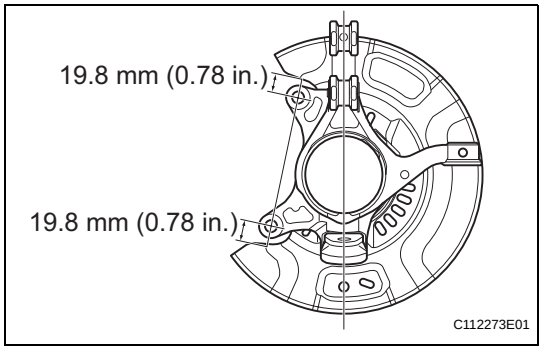

2. INSTALL FRONT DISC BRAKE DUST COVER

(a) Provisionally install a new disc brake dust cover, as shown in the illustration.

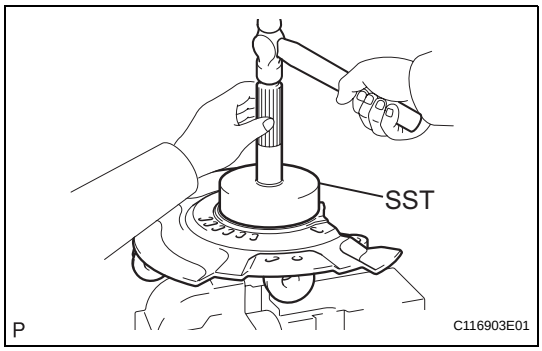

(b) Using SST and a hammer, install the disc brake dust cover.

SST 09223-56010

NOTICE:

- **Uniformly press in the disc brake dust cover while sliding SST slightly.**
- **Surely press in the disc brake dust cover until the pressing-in base.**

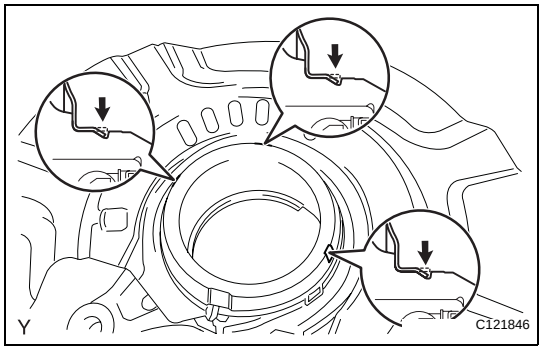

(c) Using a chisel, fix the 3 points on the circumference.

NOTICE:

Securely fold each end into the engagement grooves.

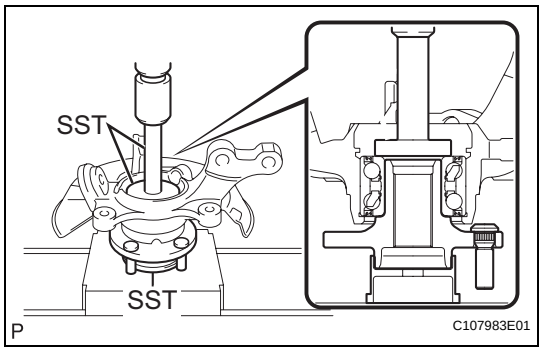

3. INSTALL FRONT AXLE HUB SUB-ASSEMBLY

(a) Using SST and a press, press the axle hub into the steering knuckle.

SST 09608-32010, 09950-60010 (09951-00500), 09950-70010 (09951-07100)

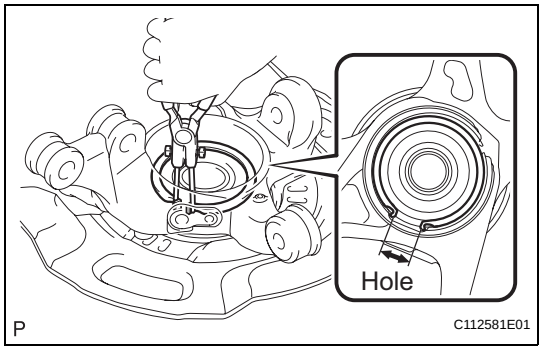

4. INSTALL FRONT AXLE HUB HOLE SNAP RING

(a) Using snap ring pliers, install a new hole snap ring, as shown in the illustration.

NOTICE:

- **Do not overlap the end of the snap ring and the installation hole in the speed sensor on the knuckle side.**
- **Do not damage the magnetic rotor surface of the bearing when installing the snap ring.**

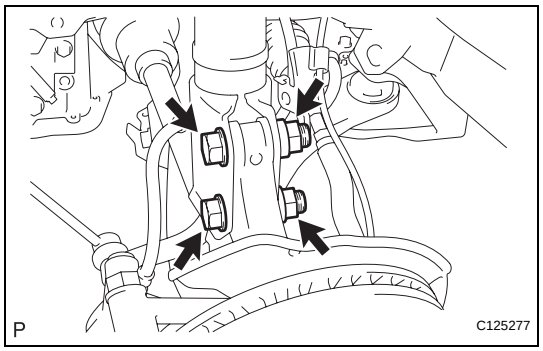

INSTALLATION

1. INSTALL FRONT AXLE ASSEMBLY

(a) Install the front axle assembly onto the shock absorber.

(b) Install the 2 bolts and 2 nuts.

Torque: 164 N*m (1,672 kgf*cm, 121 ft.*lbf)

HINT:

Keep the nut from rotating while turning the bolt.

(c) Push the front axle out of the vehicle to align the spline of the drive shaft with the front axle and insert the front axle.

NOTICE:

- **Do not push the front axle further out of the vehicle than is necessary.**
- **Do not damage the outboard joint boot.**
- **Check for any foreign matter on the speed sensor rotor and insertion part.**
- **Do not damage the speed sensor rotor.**

2. INSTALL FRONT LOWER SUSPENSION ARM (See page DS-14)

3. INSTALL FRONT STABILIZER LINK ASSEMBLY (See page DS-14)

4. INSTALL TIE ROD END SUB-ASSEMBLY (See page DS-15)

5. INSTALL FRONT DISC (See page BR-52)

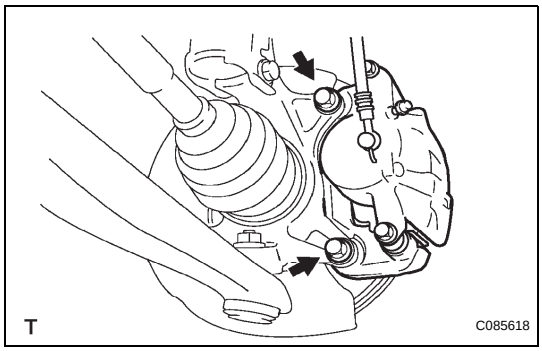

6. **INSTALL FRONT DISC BRAKE CALIPER ASSEMBLY**
   (a) Install the disc brake caliper onto the steering knuckle.
   Torque: 107 N*m (1,089 kgf*cm, 79 ft.*lbf)
7. **INSTALL FRONT SPEED SENSOR (w/ ABS) (See page DS-15)**
8. **INSTALL FRONT AXLE HUB NUT (See page DS-15)**
9. **INSPECT FRONT AXLE HUB BEARING (See page AH-1)**
10. **INSTALL FRONT WHEEL**
    Torque: 103 N*m (1,050 kgf*cm, 76 ft.*lbf)
11. **INSPECT AND ADJUST FRONT WHEEL ALIGNMENT**
    (See page SP-2)
12. **CONNECT CABLE TO NEGATIVE BATTERY TERMINAL**
    Torque: 5.4 N*m (55 kgf*cm, 48 in.*lbf)
13. **CHECK ABS SENSOR SIGNAL (w/ ABS)**
    (See page BC-14)

REAR AXLE HUB BOLT

COMPONENTS

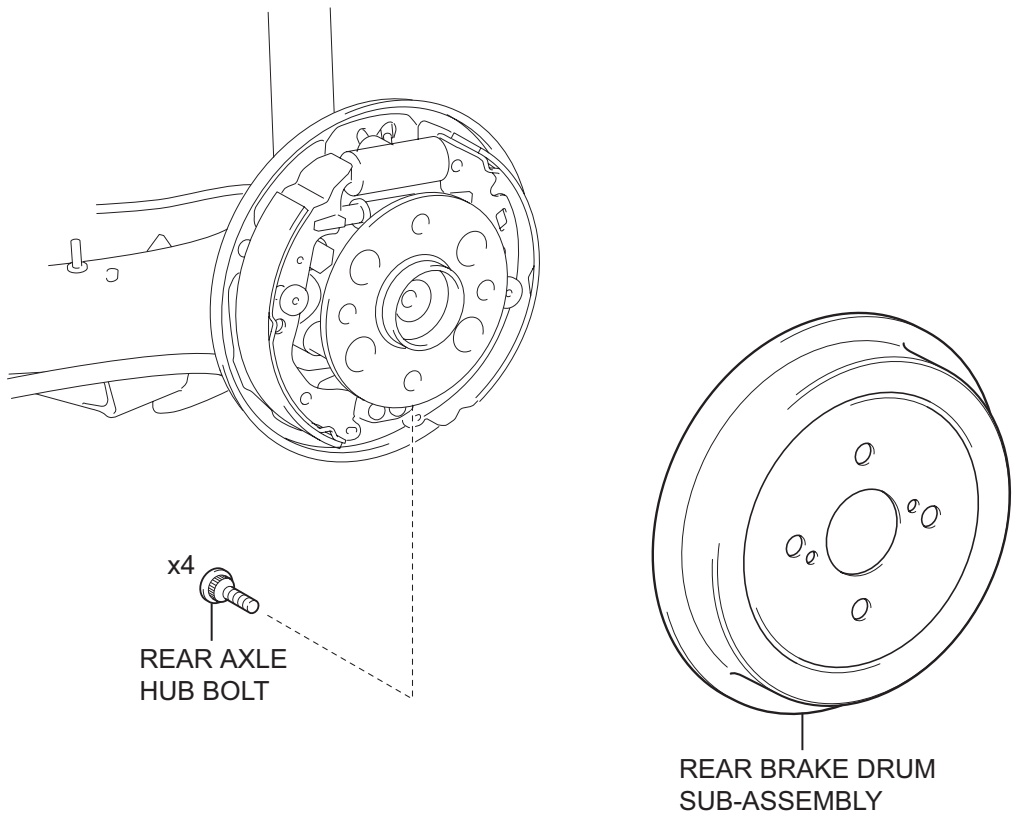

P

C121817E01

REMOVAL

1. **REMOVE REAR WHEEL**
2. **REMOVE REAR BRAKE DRUM SUB-ASSEMBLY (See page BR-60)**
3. **REMOVE REAR AXLE HUB BOLT**
   (a) Using SST and a screwdriver or the equivalent, remove the hub bolt.
   SST 09628-10011

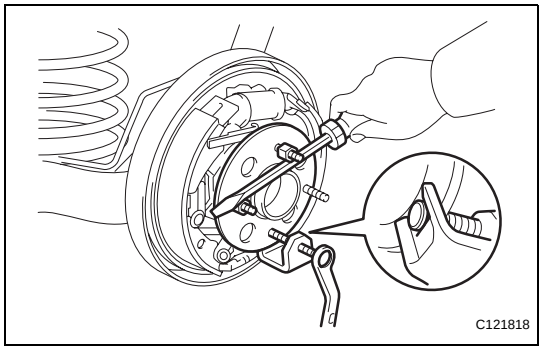

INSTALLATION

1. **INSTALL REAR AXLE HUB BOLT**
   (a) Install the washer and the nut onto a new hub bolt as shown in the illustration.
   (b) Using a screwdriver or the equivalent to hold the hub and bearing, install the hub bolt by tightening the nut.
2. **INSTALL REAR BRAKE DRUM SUB-ASSEMBLY**
3. **ADJUST REAR DRUM BRAKE SHOE CLEARANCE (See page BR-67)**
4. **INSTALL REAR WHEEL**
   Torque: 103 N*m (1,050 kgf*cm, 76 ft.*lbf)

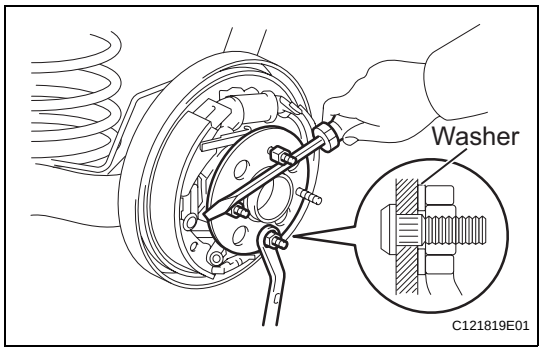

REAR AXLE HUB AND BEARING

COMPONENTS

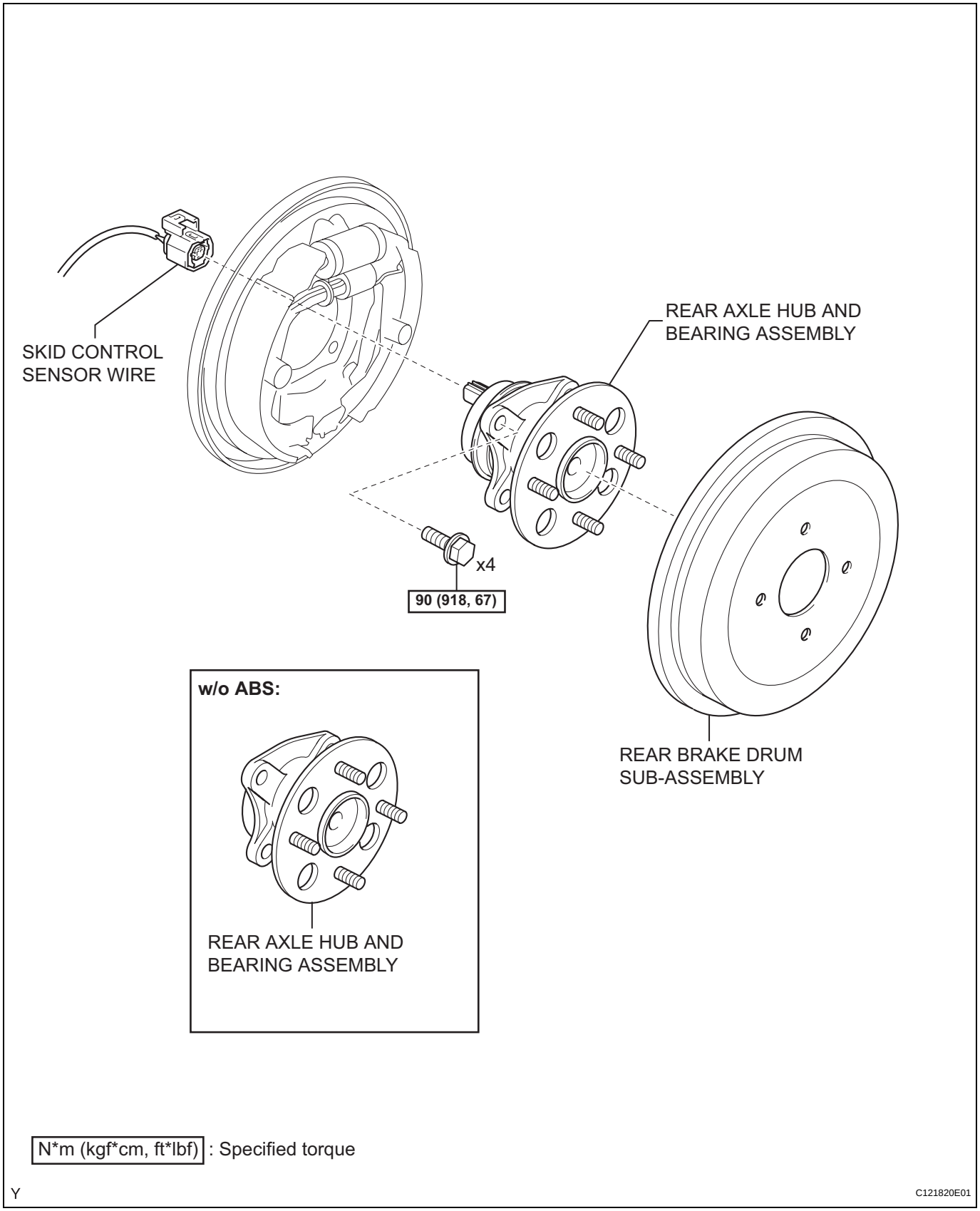

REMOVAL

1. **DISCONNECT CABLE FROM NEGATIVE BATTERY TERMINAL**
2. **REMOVE REAR WHEEL**
3. **REMOVE REAR BRAKE DRUM SUB-ASSEMBLY (See page BR-60)**
4. **DISCONNECT SKID CONTROL SENSOR WIRE (w/ ABS)**
   (a) Using a screwdriver, remove the claw of the connector lock portion and disconnect the skid control sensor wire connector.
   NOTICE:
   Do not remove the connector cover from the connector because the skid control sensor wire may be damaged.

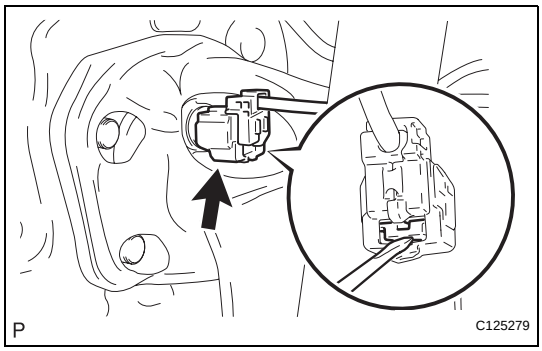

5. **REMOVE REAR AXLE HUB AND BEARING ASSEMBLY**
   (a) Remove the 4 bolts and remove the axle hub and bearing from the axle beam.
   NOTICE:
   Suspend the backing plate with a piece of rope.

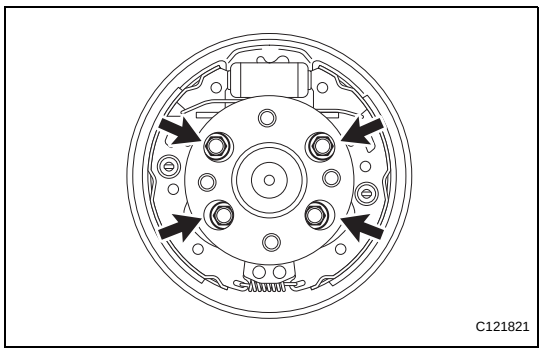

INSTALLATION

1. **INSTALL REAR AXLE HUB AND BEARING ASSEMBLY**
   (a) Install the axle hub and bearing onto the axle beam with the 4 bolts.
   Torque: 90 N*m (918 kgf*cm, 67 ft.*lbf)
2. **INSPECT REAR AXLE HUB BEARING (See page AH-2)**

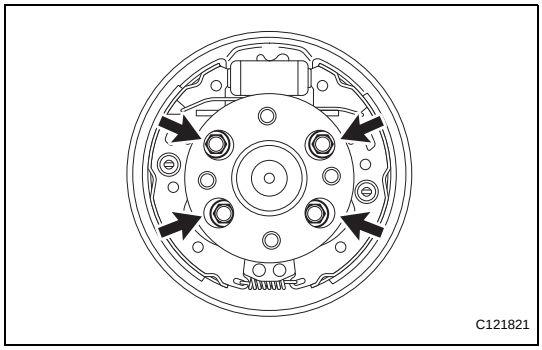
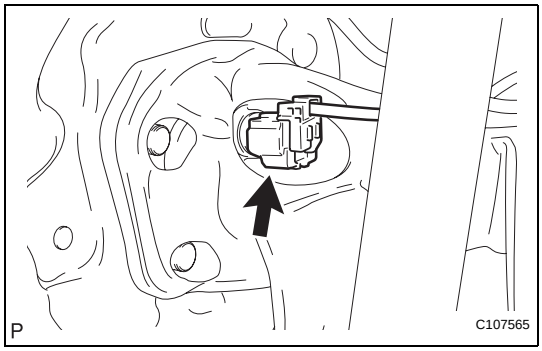
3. **CONNECT SKID CONTROL SENSOR WIRE (w/ ABS)**
   (a) Connect the skid control sensor wire connector.
4. **INSTALL REAR BRAKE DRUM SUB-ASSEMBLY**
5. **ADJUST REAR DRUM BRAKE SHOE CLEARANCE (See page BR-67)**
6. **INSTALL REAR WHEEL**
   Torque: 103 N*m (1,050 kgf*cm, 76 ft.*lbf)
7. **CONNECT CABLE TO NEGATIVE BATTERY TERMINAL**
   Torque: 5.4 N*m (55 kgf*cm, 48 in.*lbf)
8. **CHECK ABS SENSOR SIGNAL (w/ ABS)**
   (See page BC-14)