# POWER DOOR LOCK CONTROL SYSTEM

## PRECAUTION

### 1. EXPRESSIONS OF IGNITION SWITCH

(a) The type of ignition switch used on this model differs according to the specifications of the vehicle.
The expressions listed in the table below are used in this section.

| Switch Type | | Ignition Switch (position) | Engine Switch (condition) |
|---|---|---|---|
| Expression | Ignition switch off | LOCK | Off |
| | Ignition switch on (IG) | ON | On (IG) |
| | Ignition switch on (ACC) | ACC | On (ACC) |
| | Engine start | START | Start |

# PARTS LOCATION

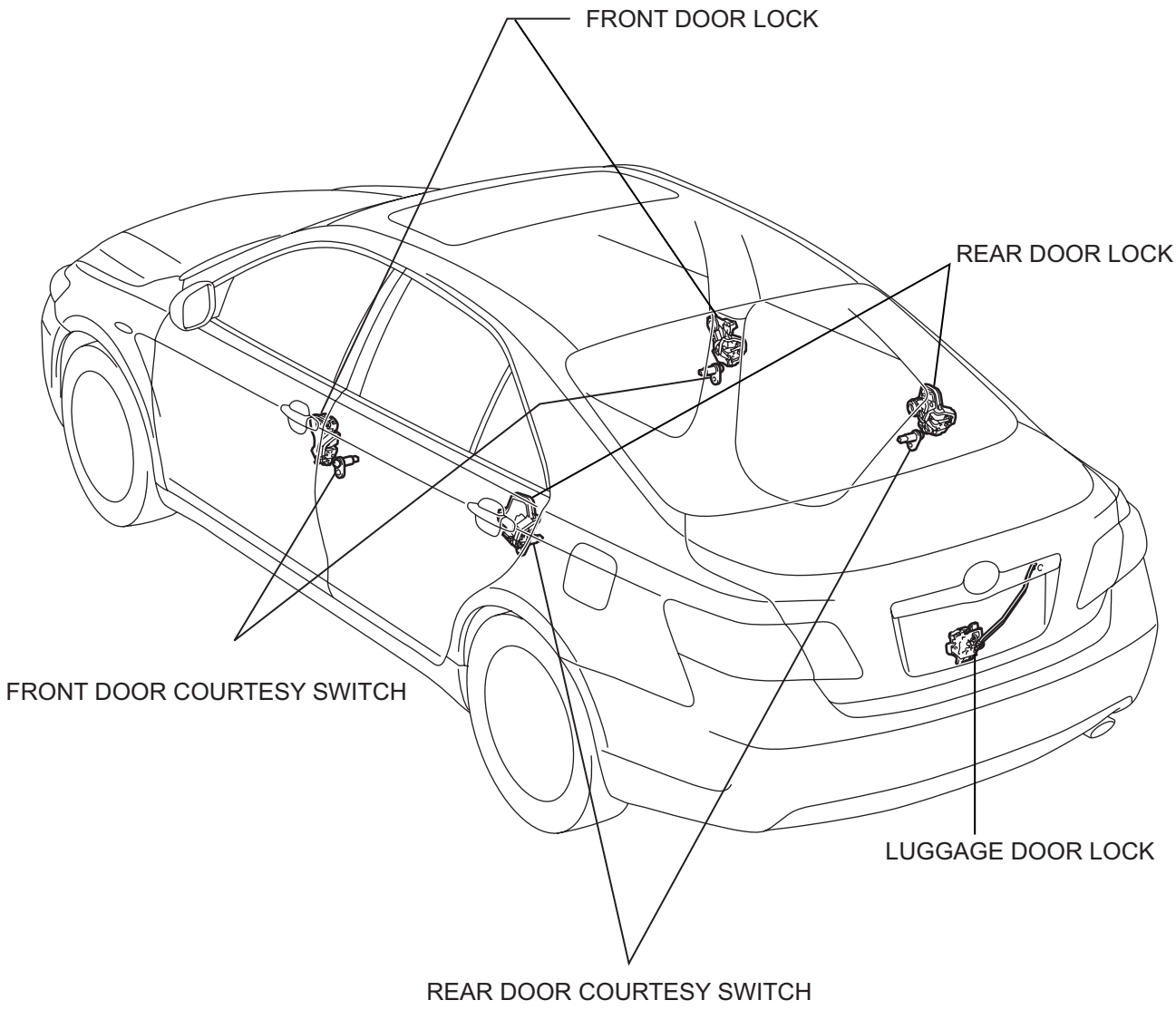


H

B112603E01

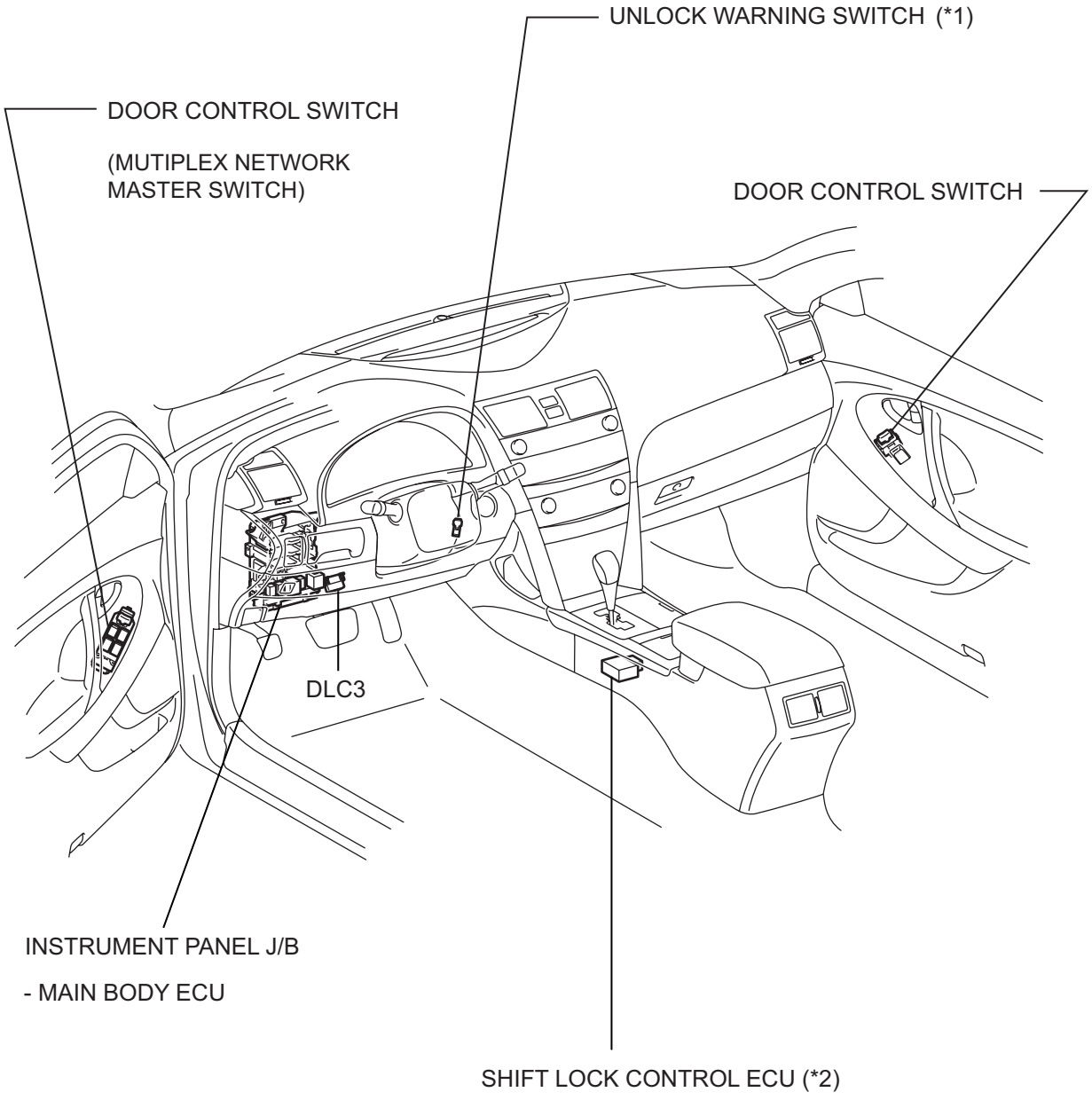


*1: W/O SMART KEY SYSTEM

*2: W/ SMART KEY SYSTEM

H

B112602E01

DL

# SYSTEM DIAGRAM

**Door Lock Control System:**

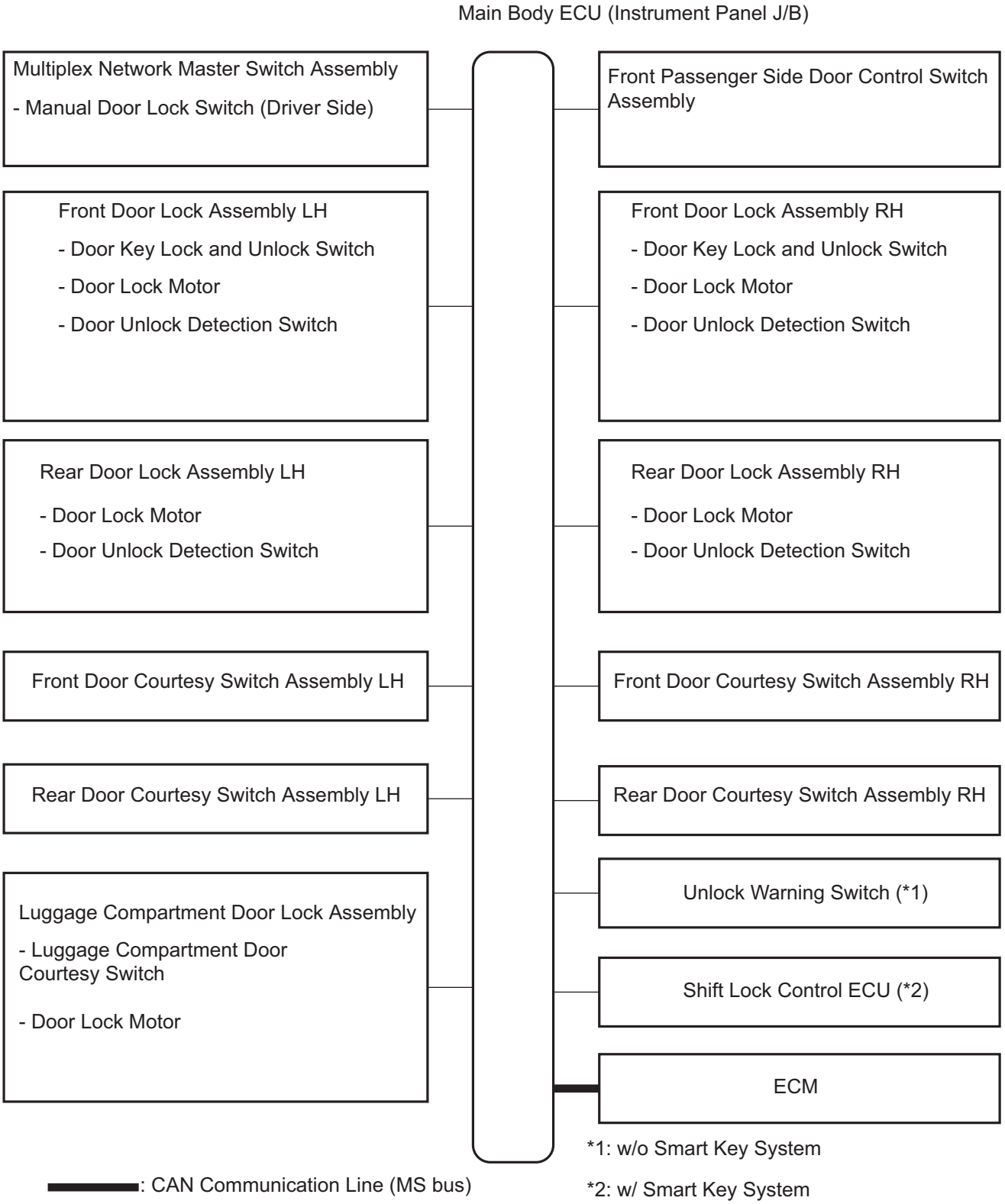


| Transmitting ECU (Transmitter) | Receiving ECU (Receiver) | Signals | Communication method |
|---|---|---|---|
| ECM | Main Body ECU | Park / Neutral Position Switch Signal | CAN (MS bus) |

# SYSTEM DESCRIPTION

## 1. POWER DOOR LOCK CONTROL SYSTEM DESCRIPTION

(a) The power door lock system locks/unlocks all the doors.
The master switch and the door control switch on the passenger door send "lock/unlock" request signals to the main body ECU. Then, the main body ECU sends these request signals to the lock motors in each door to lock/unlock all the doors at once in response to the inputs.
Operating the driver's door lock using a mechanical key sends request signals to lock/unlock the doors to the main body ECU via the master switch. "2-step unlock function" is optional for unlocking procedures of the key-linked lock for the driver side door.

## 2. FUNCTION OF MAIN COMPONENT

| Components | Function |
|---|---|
| Multiplex network master switch assembly (Manual door lock switch) | Door control switch on master switch assembly locks/unlocks all doors. |
| Door control switch | Door control switch on passenger side door locks/unlocks all doors. |
| Door courtesy switch | Placed on each door. Detects door status (open or closed) and outputs data to main body ECU. Turns on when door is open and turns off when door is closed. |
| Driver side door lock | • Built-in motor locks/unlocks door.<br>• Built-in door control switch (key-linked) detects door key operation's door status (locked or unlocked) and outputs data to main body ECU.<br>• Built-in position switch detects door status (locked or unlocked) and outputs data to main body ECU. This switch turns off when door is locked and turns on when door is unlocked. |
| Front passenger side door lock, luggage compartment door lock, rear LH and RH door locks | • Built-in motor locks/unlocks door.<br>• Built-in position switch detects door status (locked or unlocked) and outputs data to main body ECU. This switch turns off when door is locked and turns on when door is unlocked. |

## 3. SYSTEM FUNCTION

HINT:
The following functions' default settings are ON. Some of these functions can be customized (See page DL-10).

(a) This system is controlled by the main body ECU. The main body ECU outputs signals to each door lock motor. The door lock control system of the CAMRY has the following functions:

| Function | Outline |
|---|---|
| Manual lock and unlock function | This function can lock or unlock all doors by the door lock control switch operation. |
| Key-linked lock and unlock function | This function, which is linked with the key cylinder, can lock or unlock all the doors when a lock or unlock operation is effected. |
| Manual unlock prohibition function | Performing the door lock operation with an electrical key (*1) or a mechanical key (transmitter) will prohibit the unlock operation by the door lock control switch. |
| Key lock-in prevention function (Electrical key) | If a each door lock (*1) or driver's door lock (*2) operation is performed when the electrical key (*1) or mechanical key is in the cabin (*1) or ignition key cylinder (*2), all the doors will be unlocked. |

| Function | Outline |
|---|---|
| Shift-linked automatic door lock function (A/T) | When the conditions listed below are met consecutively, this function causes all the doors to be automatically locked.<br>• The ignition switch is on (IG).<br>• All doors are closed.<br>• The shift lever is moved out of the P position.<br>• Any of the doors are unlocked. |
| Shift-linked automatic door unlock function (A/T) | When the ignition switch is on (IG), if moving the shift lever to the P position from any other position, all the doors will be automatically unlocked. |
| One-motion open | When the door is locked, this function enables the door to be unlocked by pulling the inside handle of the driver's or front passenger's door. |
| 2-step unlock function | This function is provided to unlock the driver's door by turning the key cylinder once and to unlock the remaining doors by turning it the second time. |

*1: w/ Smart Key System
*2: w/o Smart Key System

# HOW TO PROCEED WITH TROUBLESHOOTING

HINT:
- Use the following procedures to troubleshoot the power door lock control system.
- The intelligent tester should be used in step 5 and 7.

| 1 | VEHICLE BROUGHT TO WORKSHOP |
|---|---|

NEXT

| 2 | CUSTOMER PROBLEM ANALYSIS CHECK |
|---|---|

HINT:
- In troubleshooting, confirm that the problem symptoms have been accurately identified. Preconceptions should be discarded in order to make an accurate judgment. To clearly understand what the problem symptoms are, it is extremely important to ask the customer about the problem and the conditions at the time the malfunction occurred.
- Gather as much information as possible for reference. Past problems that seem unrelated may also help in some cases.
- The following 5 items are important points in the problem analysis:

| | |
|---|---|
| What | Vehicle model, system name |
| When | Date, time, occurrence frequency |
| Where | Road conditions |
| Under what conditions? | Running conditions, driving conditions, weather conditions |
| How did it happen? | Problem symptoms |

NEXT

| 3 | INSPECT BATTERY VOLTAGE |
|---|---|

**Standard Voltage:**
**11 to 14 V**
**If the voltage is below 11 V, recharge or replace the battery before proceeding to the next step.**

NEXT

| 4 | PROBLEM SYMPTOMS TABLE |
|---|---|

**Result**

| Result | Proceed to |
|---|---|
| **Fault is not listed in problem symptoms table** | **A** |
| **Fault is listed in problem symptoms table** | **B** |

B → **After repair, go to step 7**

A

| 5 | **OVERALL ANALYSIS AND TROUBLESHOOTING** |
|---|---|

(a) Terminals of ECU
(See page DL-13)
(b) DATA LIST/ACTIVE TEST
(See page DL-17)

NEXT

| 6 | **REPAIR OR REPLACE** |
|---|---|

NEXT

| 7 | **CONFIRMATION TEST** |
|---|---|

NEXT

**END**

# OPERATION CHECK

**1. CHECK ELECTRICAL DOOR LOCK OPERATION**

**NOTICE:**

**The initial condition that the customizing function using the intelligent tester is not chosen is shown.**

(a) Check the basic function.

(1) Check that all doors lock when the door control switch (for manual operation) is turned to LOCK and all doors unlock when turned to UNLOCK.

(2) Check that all doors lock when the driver side door lock key cylinder is turned to LOCK using the mechanical key.

(b) Check the electrical key lock-in prevention function (w/ Smart Key System).

**NOTICE:**

**In order to prevent the electrical key from being actually locked-in, the following inspection should be performed with the driver side door window open.**

(1) Place the electrical key in the cabin.

(2) With the driver side door open, check that all doors unlock immediately after the door lock knob for the driver side door is turned to LOCK.

(3) With the driver side door open, check that all doors unlock immediately after the door control switch (for manual operation) is turned to LOCK.

(4) With the driver side door open, turn the driver side door lock knob to LOCK, and then close the driver side door. Then check that all doors unlock.

(c) Check the key lock-in prevention function (w/o Smart Key System).

**NOTICE:**

**In order to prevent the key from being actually locked-in, the inspection should be performed with the driver side door window open.**

(1) Have the key inserted into the ignition key cylinder.

(2) With the driver side door open, check that all doors unlock immediately after the door lock knob for the driver side door is turned to LOCK.

(3) With the driver side door open, check that all doors unlock immediately after the door control switch (for manual operation) is turned to LOCK.

(4) With the driver side door open, turn the driver side door lock knob to LOCK, and then close the driver side door. Then check that all doors unlock.

(d) Check the security function.

*1: w/ Smart Key System

(1) Close all doors with the driver side door window open so that the door control switch can be operated from outside the vehicle.

(2) Pull out the electrical key (*1) or mechanical key (transmitter), open the driver side door and then close and lock the door using the electrical key (*1) or mechanical key (transmitter). Under this condition, check that all doors do not unlock when the door control switch (for manual operation) is turned to UNLOCK from outside the vehicle.

(3) Pull out the electrical key (*1) or the mechanical key, and close and lock the driver side door by mechanical key operation. Under this condition, check that all doors do not unlock when the door control switch (for manual operation) is turned to UNLOCK from outside the vehicle.

(4) Pull out the electrical key (*1) or mechanical key (transmitter), close the driver side door, and lock the door by wireless door lock operation. Under this condition, check that all doors do not unlock when the door control switch (for manual operation) is turned to UNLOCK from outside the vehicle.

HINT:
Check that the security function is canceled under the following conditions:

- The ignition switch is turned on (IG).
- The driver side door is unlocked using the mechanical key (transmitter) or the electrical key.
- The door control switch (for manual operation) is turned to UNLOCK after the door control knob is turned to UNLOCK manually.

(e) Check the illumination function.

(1) Set the room light switch to the DOOR position.

(2) With all doors locked, check that driver's door unlock when the driver side door lock cylinder is turned to UNLOCK using the key. At the same time, the room light comes on.

(3) Check that the room light goes off in approximately 15 seconds if the doors have not been opened.

(f) Check the AUTO lock function (w/ Smart Key System).

(1) Lock all doors.

(2) Unlock driver's door using the electrical key.

(3) Allow 30 seconds to elapse while all doors remain closed and the electrical key switch and the entry unlock switch remain untouched. Then, check that all doors will lock automatically.

(g) Check the automatic locking function interlocked with the shift lever.
*1: w/o Smart Key System and w/o Theft Deterrent System
*2: Except *1
(1) When any door (*1), driver's door or passenger's door (*2) is unlocked with all doors closed and the engine started, check that all doors automatically lock when the shift lever is moved into any position from the P position (A/T).
(2) When any door is unlocked after all doors automatically lock, check that all doors attempt to automatically lock once again (retry function). The retry function is canceled when any of the following conditions is fulfilled:
- All doors are locked.
- Any door is opened.
- The shift lever is moved into the P position.
- The doors are locked or unlocked by the user.
- The ignition switch is turned off.
- The engine is stopped.

# CUSTOMIZE PARAMETERS

**1. CUSTOMIZING FUNCTION WITH INTELLIGENT TESTER**

HINT:

The following items can be customized.

**NOTICE:**

- **Before attempting to customize vehicle settings, confirm whether it is possible to make the change that the customer has requested.**
- **Be sure to record the current settings before customizing.**
- **When troubleshooting, make sure that the item in question has not been disabled using the customizing function.**

## DOOR LOCK:

| Display (Item) | Default | Contents | Setting |
|---|---|---|---|
| UNLOCK/PARK (Unlock w/ engine switch on (IG), shift P, speed 0 km/h (0 mph)) | A/T: ON<br>M/T: OFF (Cannot be changed) | Function that unlocks doors when the shift lever is moved to the P position from any other position while the ignition switch is on (IG) | ON/OFF |
| ALL UNLK/OPN-CL (All unlock w/ D door open-close) | A/T: OFF<br>M/T: ON | Function that unlocks all other doors when opening driver side door within 10 seconds after turning the ignition switch off from on (IG) | ON/OFF |
| UNLK/KEY TWICE (Unlock w/ 2 times D key operation) | ON | • Function that unlocks only the driver side door when the driver side door key cylinder is turned to unlock once and unlocks all the doors when it is turned to unlock twice<br>• In the OFF setting, turning it once unlocks all doors | ON/OFF |
| AUTO LOCK/SHIFT (Auto lock/shift not P) | A/T: ON<br>M/T: OFF (Cannot be changed) | Function that locks doors when the shift lever is moved from the P position to any other position | ON/OFF |
| AUTO LOCK | OFF | Function that locks doors when vehicle reaches a vehicle speed 20 km/h (13 mph) | ON/OFF |

## WIRELESS D LOCK:

| Display (Item) | Default | Contents | Setting |
|---|---|---|---|
| AUTO LOCK DELAY | 60s | Function that selects AUTO LOCK time (30 sec. or 60 sec.) | 30s/60s |

# PROBLEM SYMPTOMS TABLE

## POWER DOOR LOCK CONTROL SYSTEM:

| Symptom | Suspected area | See page |
|---|---|---|
| All doors cannot be locked/unlocked simultaneously by neither door control switch nor door key cylinder | Power source circuit (Main body ECU) | DL-13 |
| | Replace main body ECU (Instrument panel J/B) | - |
| All doors cannot be locked/unlocked simultaneously by driver side door control switch | Door control switch circuit (Driver side) | DL-60 |
| | Replace main body ECU (Instrument panel J/B) | - |
| All doors cannot be locked/unlocked simultaneously by front passenger side door control switch | Door control switch circuit (Front passenger side door) | DL-60 |
| | Replace main body ECU (Instrument panel J/B) | - |
| All doors cannot be locked/unlocked simultaneously by door key cylinder | Driver side door key lock and unlock switch circuit | DL-56 |
| | Multiplex network master switch assembly | DL-13 |
| | Replace main body ECU (Instrument panel J/B) | - |
| Driver side door lock does not operate | Driver side door lock motor circuit | DL-32 |
| | Replace main body ECU (Instrument panel J/B) | - |
| Passenger side door lock does not operate | Front passenger side door lock motor circuit | DL-35 |
| | Replace main body ECU (Instrument panel J/B) | - |
| Rear LH side door lock does not operate | Rear door lock motor LH circuit | DL-38 |
| | Replace main body ECU (Instrument panel J/B) | - |
| Rear RH side door lock does not operate | Rear door lock motor RH circuit | DL-41 |
| | Replace main body ECU (Instrument panel J/B) | - |
| Luggage compartment door lock does not operate | Luggage compartment door lock circuit | DL-47 |
| | Replace main body ECU (Instrument panel J/B) | - |
| Key lock-in prevention function does not work properly (manual operation and key-linked lock are active) w/ Smart Key System | Door courtesy switch circuit (Driver side) | LI-52 |
| | Smart key system | DL-147 |
| | Replace main body ECU (Instrument panel J/B) | - |
| Key lock-in prevention function does not work properly (manual operation and key-linked lock are active) w/o Smart Key System | Door courtesy switch circuit (Driver side) | LI-52 |
| | Unlock warning switch circuit | DL-205 |
| | Replace main body ECU (Instrument panel J/B) | - |
| Shift-linked automatic door lock does not operate (A/T) | CAN communication system | CA-8 |
| | Replace main body ECU (Instrument panel J/B) | - |
| One or more doors cannot be locked/unlocked simultaneously (Wireless key operation) | Wireless door lock system (w/ smart key system) | DL-74 |
| | Wireless door lock system (w/o smart key system) | DL-104 |
| | Driver side door unlock detection switch circuit | DL-19 |
| | Front passenger door unlock detection switch circuit | DL-22 |
| | Rear door unlock detection switch LH circuit | DL-25 |
| | Rear door unlock detection switch RH circuit | DL-28 |
| | Replace main body ECU (Instrument panel J/B) | - |
| One or more doors cannot be locked/unlocked simultaneously (Theft deterrent operation) | Theft deterrent system (w/ smart key system) | TD-15 |
| | Theft deterrent system (w/o smart key system) | TD-53 |
| | Driver side door unlock detection switch circuit | DL-19 |
| | Front passenger door unlock detection switch circuit | DL-22 |
| | Rear door unlock detection switch LH circuit | DL-25 |
| | Rear door unlock detection switch RH circuit | DL-28 |
| | Replace main body ECU (Instrument panel J/B) | - |

# TERMINALS OF ECU

## 1. CHECK MAIN BODY ECU (INSTRUMENT PANEL JUNCTION BLOCK)

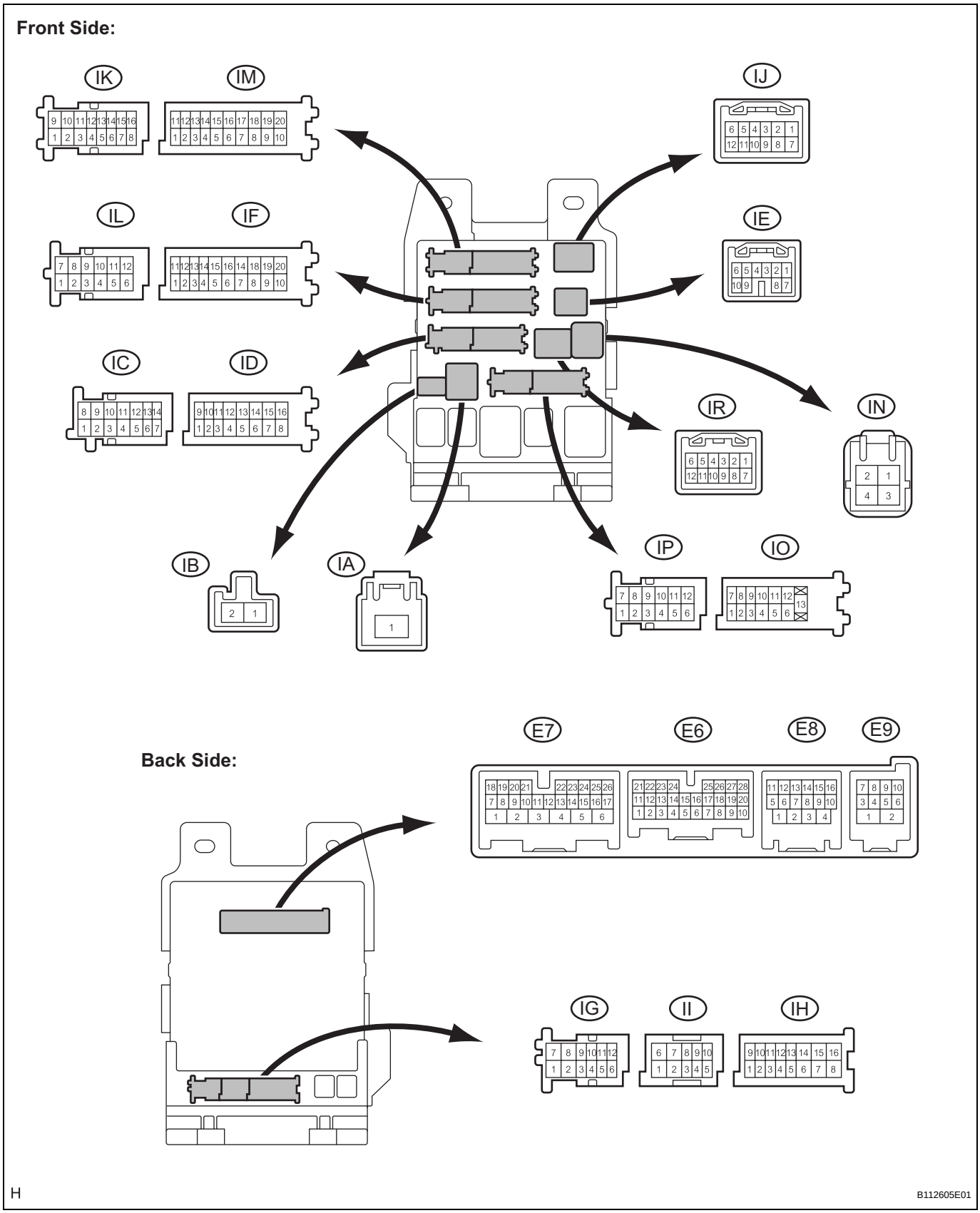

(a) Disconnect the E6, E7, IO, IK, IM, ID, IA, IF, IJ, and E9 J/B and ECU connectors.
(b) Measure the voltage and resistance according to the value(s) in the table below.

| Symbols (Terminal No.) | Wiring Color | Terminal Description | Condition | Specified Condition |
|---|---|---|---|---|
| DCTY (E7-24) - Body ground | L - Body ground | Driver door courtesy switch | Driver door CLOSED → OPEN | 10 kΩ or higher → Below 1 Ω |
| RCTY (E6-5 (*1), 7 (*2)) - Body ground | GR - Body ground | Rear right door courtesy switch input | Rear right door CLOSED → OPEN | 10 kΩ or higher → Below 1 Ω |
| PCTY (E6-21) - Body ground | Y - Body ground | Passenger door courtesy switch input | Passenger door CLOSED → OPEN | 10 kΩ or higher → Below 1 Ω |
| LCTY (IO-7) - Body ground | LG - Body ground | Rear left door courtesy switch input | Rear left door CLOSED → OPEN | 10 kΩ or higher → Below 1 Ω |
| GND2 (IM-9) - Body ground | W-B - Body ground | Ground | Always | Below 1 Ω |
| IG (IA-1) - Body ground | B - Body ground | Engine power supply | Ignition switch on (IG) → off | 10 to 14 V → Below 1 V |
| GND1 (IF-10) - Body ground | W-B - Body ground | Ground | Always | Below 1 Ω |
| ACC (IA-1) - Body ground | B - Body ground | ACC power supply | Always | 10 to 14 V |
| L1 (IJ-3) - Body ground | L - Body ground | Passenger door control switch LOCK input | Passenger door control switch OFF → LOCK | 10 kΩ or higher → Below 1 Ω |
| UL1 (IJ-4) - Body ground | G - Body ground | Passenger door control switch UNLOCK input | Passenger door control switch OFF → UNLOCK | 10 kΩ or higher → Below 1 Ω |
| L1 (IK-15) - Body ground | V - Body ground | Driver door control switch LOCK input | Driver door control switch OFF → LOCK | 10 kΩ or higher → Below 1 Ω |
| UL1 (IK-12) - Body ground | G - Body ground | Driver door control switch UNLOCK input | Driver door control switch OFF → UNLOCK | 10 kΩ or higher → Below 1 Ω |
| KSW (*1) (E9-5) - Body ground | L - Body ground | Unlock warning switch signal input | No key is in ignition key cylinder → Key is in ignition key cylinder | 10 kΩ or higher → Below 1 Ω |
| LGCY (E6-25) - Body ground | W - Body ground | Luggage compartment door courtesy switch input | Luggage compartment door CLOSED → OPEN | 10 kΩ or higher → Below 1 Ω |
| TSW (E6-2) - Body ground | R - Body ground | Luggage compartment door key-linked door unlock input | Using mechanical key, operate luggage compartment door lock cylinder to LOCK → OPEN → UNLOCK | 10 kΩ or higher → Below 1 Ω → 10 kΩ or higher → |
| BECU (*1) (ID-10) - Body ground | O - Body ground | +B (BECU) power supply | Always | 10 to 14 V |

*1: w/o Smart Key System
*2: w/ Smart Key System
If the result is not as specified, there may be a malfunction on the wire harness side.

(c) Reconnect the J/B and ECU connectors.
(d) Measure the voltage according to the value(s) in the table below.

DL

| Symbols (Terminal No.) | Wiring Color | Terminal Description | Condition | Specified Condition |
|---|---|---|---|---|
| LSWL (*2), LSR (*1) (IP-5) - Body ground | GR - Body ground | Rear left door lock position switch input | Rear left door UNLOCK → LOCK | Below 1 V → 10 to 14 V (or pulse generation) |
| LSWL (*1) (IL-5) - Body ground | GR - Body ground | Rear right door lock position switch input | Rear right door UNLOCK → LOCK | Below 1 V → 10 to 14 V (or pulse generation) |
| LSWD (E7-9) - Body ground | L - Body ground | Driver door lock position switch input | Driver door UNLOCK → LOCK | Below 1 V → 10 to 14 V (or pulse generation) |

| Symbols (Terminal No.) | Wiring Color | Terminal Description | Condition | Specified Condition |
|---|---|---|---|---|
| UL3 (E7-8) - Body ground | GR - Body ground | Driver door key-linked door unlock input | Using mechanical key, operate driver door lock cylinder to LOCK → UNLOCK | Below 1 V → 10 to 14 V (or pulse generation) |
| L2 (IK-16) - Body ground | BR - Body ground | Driver door key-linked door lock input | Using mechanical key, operate driver door lock cylinder to UNLOCK → LOCK | Below 1 V → 10 to 14 V (or pulse generation) |
| UL2 (IK-7) - Body ground | GR - Body ground | Front passenger door key-linked door unlock input | Using mechanical key, operate passenger door lock cylinder to LOCK → UNLOCK | Below 1 V → 10 to 14 V (or pulse generation) |
| L2 (IJ-5) - Body ground | W - Body ground | Front passenger door key-linked door lock input | Using mechanical key, operate passenger door lock cylinder to UNLOCK → LOCK | Below 1 V → 10 to 14 V (or pulse generation) |
| ACT+ (IJ-1) - Body ground | L - Body ground | Door lock motor LOCK drive output (Front passenger door) | Door control switch (Master switch or passenger side switch) or driver side door key cylinder OFF → LOCK → OFF | Below 1 V → 10 to 14 V → Below 1 V |
| ACT+ (IP-11) - Body ground | W - Body ground | Door lock motor LOCK drive output (Rear door LH) | Door control switch (Master switch or passenger side switch) or driver side door key cylinder OFF → LOCK → OFF | Below 1 V → 10 to 14 V → Below 1 V |
| ACT+ (IF-5) - Body ground | L - Body ground | Door lock motor LOCK drive output (Rear door RH) | Door control switch (Master switch or passenger side switch) or driver side door key cylinder OFF → LOCK → OFF | Below 1 V → 10 to 14 V → Below 1 V |
| ACT- (IP-6) - Body ground | G - Body ground | Door lock motor UNLOCK drive output (Rear door LH) | Door control switch (Master switch or passenger side switch) or driver side door key cylinder OFF → UNLOCK → OFF | Below 1 V → 10 to 14 V → Below 1 V |
| ACT- (IF-18) - Body ground | B - Body ground | Door lock motor UNLOCK drive output (Rear door RH) | Door control switch (Master switch or passenger side switch) or driver side door key cylinder OFF → UNLOCK → OFF | Below 1 V → 10 to 14 V → Below 1 V |
| TR+ (E7-1) - Body ground | B - Body ground | Door lock motor UNLOCK drive output (Luggage compartment door) | Luggage compartment open switch (Transmitter) or luggage compartment door key cylinder OFF → UNLOCK → OFF | Below 1 V → 10 to 14 V → Below 1 V |
| ACTD (E7-5) - Body ground | GR - Body ground | Door lock motor UNLOCK drive output (Driver door) | Door control switch (Master switch or passenger side switch) or driver side door key cylinder OFF → UNLOCK → OFF | Below 1 V → 10 to 14 V → Below 1 V |
| ACT+ (IK-2) - Body ground | W - Body ground | Door lock motor LOCK drive output (Driver door) | Door control switch (Master switch or passenger side switch) or driver side door key cylinder OFF → LOCK → OFF | Below 1 V → 10 to 14 V → Below 1 V |

| Symbols (Terminal No.) | Wiring Color | Terminal Description | Condition | Specified Condition |
|---|---|---|---|---|
| ACT- (IJ-2) - Body ground | LG - Body ground | Door lock motor UNLOCK drive output (Front passenger) | Door control switch (Master switch or passenger side switch) or driver side door key cylinder OFF → UNLOCK → OFF | Below 1 V → 10 to 14 V → Below 1 V |
| LSWR (*2) (E6-5) - Body ground | V - Body ground | Rear right door lock position switch input | Rear right door UNLOCK → LOCK | Below 1 V → 10 to 14 V (or pulse generation) |
| LSWP (E6-27) - Body ground | LG - Body ground | Passenger door lock position switch input | Passenger door UNLOCK → LOCK | Below 1 V → 10 to 14 V (or pulse generation) |

*1: w/o Smart Key System
*2: w/ Smart Key System
If the result is not as specified, the main body ECU (instrument panel J/B) may have a malfunction.

# DIAGNOSIS SYSTEM

**1. DESCRIPTION**

(a) Power door lock control system data and Diagnostic Trouble Codes (DTCs) can be read through the Data Link Connector 3 (DLC3) of the vehicle. When the system seems to be malfunctioning, use the intelligent tester to check for malfunctions and perform repairs.

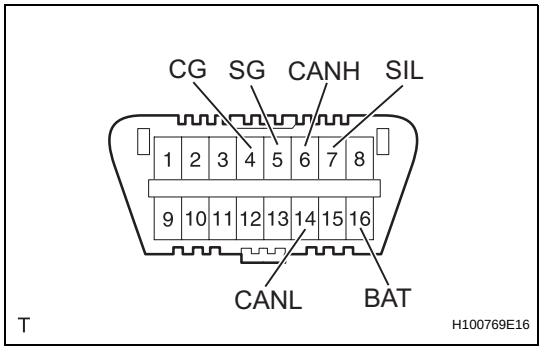


**2. CHECK DLC3**

HINT:
The vehicle uses the ISO 15765-4 communication protocol. The terminal arrangement of the DLC3 complies with SAE J1962 and matches the ISO 15765-4 format.

| Symbols (Terminal No.) | Terminal Description | Condition | Specified Condition |
|---|---|---|---|
| CG (4) - Body ground | Chassis ground | Always | Below 1 Ω |
| SG (5) - Body ground | Signal ground | Always | Below 1 Ω |
| SIL (7) - SG (5) | Bus "+" line | During transmission | Pulse generation |
| BAT (16) - Body ground | Battery positive | Always | 10 to 14 V |
| CANH (6) - CANL (14) | CAN bus line | Ignition Switch OFF* | 54 to 69 Ω |
| CANH (6) - CG (4) | HIGH-level CAN bus line | Ignition Switch OFF* | 200 Ω or more |
| CANL (14) - CG (4) | LOW-level CAN bus line | Ignition Switch OFF* | 200 Ω or more |
| CANH (6) - BAT (16) | HIGH-level CAN bus line | Ignition Switch OFF* | 6 kΩ or more |
| CANL (14) - BAT (16) | LOW-level CAN bus line | Ignition Switch OFF* | 6 kΩ or more |

**NOTICE:**
***: Before measuring the resistance, leave the vehicle as is for at least 1 minute and do not operate the ignition switch, any other switches or the doors.**
If the result is not as specified, the DLC3 may have a malfunction. Repair or replace the harness and connector.

HINT:
Connect the cable of the intelligent tester to the DLC3, turn the ignition switch on (IG) and attempt to use the tester. If the display indicates that a communication error has occurred, there is a problem either with the vehicle or with the tester.

- If communication is normal when the tester is connected to another vehicle, inspect the DLC3 of the original vehicle.
- If communication is still not possible when the tester is connected to another vehicle, the problem may be in the tester itself. Consult the Service Department listed in the tester's instruction manual.

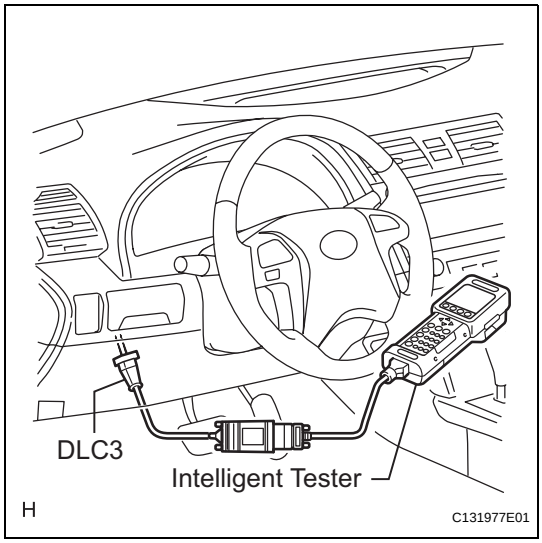


**3. INSPECT BATTERY VOLTAGE**

**Standard Voltage:**
**11 to 14 V**

**If the voltage is below 11 V, recharge or replace the battery before proceeding.**

# DATA LIST / ACTIVE TEST

**1. READ DATA LIST**

HINT:
Using the intelligent tester's DATA LIST allows switch, sensor, actuator, and other item values to be read without removing any parts. Reading the DATA LIST early in troubleshooting is one way to save time.

(a) Connect the intelligent tester to the DLC3.
(b) Turn the ignition switch on (IG).
(c) Enter the following menus: DIAGNOSIS / ENHANCED OBD II / DATA LIST.
(d) Read the DATA LIST according to the display on the tester.

**MAIN BODY:**

| Item | Measurement Item/Display (Range) | Normal Condition | Diagnostic Note |
|---|---|---|---|
| D DOR CTY SW | Driver side door courtesy light switch signal/ON or OFF | ON: Driver side door is CLOSED<br>OFF: Driver side door is OPEN | - |
| P DOR CTY SW | Passenger side door courtesy light switch signal/ON or OFF | ON: Passenger side door is CLOSED<br>OFF: Passenger side door is OPEN | - |
| RR DOR CTY SW | Rear right door courtesy light switch signal/ON or OFF | ON: Rear right door is CLOSED<br>OFF: Rear right door is OPEN | - |
| RL DOR CTY SW | Rear left door courtesy light switch signal/ON or OFF | ON: Rear left door is CLOSED<br>OFF: Rear left door is OPEN | - |
| D LOCK POS SW | Driver side door lock position switch signal/ON or OFF | ON: Driver side door is unlocked<br>ON: Driver side door is locked | - |
| P LOCK POS SW | Front passenger side door lock position switch signal/ON or OFF | ON: Front passenger side door is unlocked<br>ON: Front passenger side door is locked | - |
| RR LOCK POS SW (*1) | Rear right door lock position switch signal/ON or OFF | ON: Rear right door is unlocked<br>OFF: Rear right door is locked | - |
| RL LOCK POS SW (*1) | Rear left door lock position switch signal/ON or OFF | ON: Rear left door is unlocked<br>OFF: Rear left door is locked | - |
| LUGG COURTSY SW | Luggage compartment door courtesy light switch signal/ON or OFF | ON: Luggage compartment door is OPEN<br>OFF: Luggage compartment door is CLOSED | - |
| D/L SW-LOCK | Door control switch lock signal/ ON or OFF | ON: Door control switch is pushed to lock position<br>OFF: Door control switch is not pushed to lock position | - |
| D/L SW-UNLOCK | Door control switch unlock signal/ ON or OFF | ON: Door control switch is pushed to unlock position<br>OFF: Door control switch is not pushed to unlock position | - |
| DOR KEY SW-LOCK | Driver door lock/unlock switch lock signal (key-linked lock switch)/ON or OFF | ON: Driver side door key cylinder is turned to lock position<br>OFF: Driver side door key cylinder is turned to unlock position | - |
| DOR KEY SW-ULCK | Driver door lock/unlock switch unlock signal (key-linked unlock switch)/ON or OFF | ON: Driver side door key cylinder is turned to unlock position<br>OFF: Driver side door key cylinder is turned to lock position | - |

| Item | Measurement Item/Display (Range) | Normal Condition | Diagnostic Note |
|---|---|---|---|
| D DOR KEY SW-UL | Driver door lock/unlock switch unlock signal (2 times key-linked unlock switch)/ON or OFF | ON: Driver side door key cylinder is turned to unlock position<br>OFF: Driver side door key cylinder is turned to lock position | - |
| TRUNK KEY UNLK | Luggage compartment door key cylinder switch/ON or OFF | ON: Ignition key is inserted and turned to lock position<br>OFF: Ignition key is inserted and turned to unlock position | - |

*1: w/ Smart Key System, w/o Smart Key System with Theft Deterrent System

**2. PERFORM ACTIVE TEST**

HINT:

Performing the intelligent tester's ACTIVE TEST allows relays, VSVs, actuators, and other items to be operated without removing any parts. Performing the ACTIVE TEST early in troubleshooting is one way to save time. The DATA LIST can be displayed during the ACTIVE TEST.

(a) Connect the intelligent tester to the DLC3.
(b) Turn the ignition switch on (IG).
(c) Enter the following menus: DIAGNOSIS / ENHANCED OBD II / ACTIVE TEST.
(d) Perform the ACTIVE TEST according to the display on the tester.

**MAIN BODY:**

| Item | Test Details | Diagnostic Note |
|---|---|---|
| DOOR LOCK | Operate door lock motor LOCK/UNLOCK | - |
| D DOOR UNLOCK | Operate driver door lock motor LOCK | - |
| TRUNK/BDOR OPEN | Operate luggage compartment door lock motor LOCK | - |

# Driver Side Door UNLOCK Detection Switch Circuit

## DESCRIPTION

The driver's door unlock detection switch is built into the driver's door lock assembly. The switch turns on when the driver's door is locked and turns off when the door is unlocked.
The main body ECU is connected to the driver's door lock assembly via terminal LSWD and driver's door lock/unlock state signals are input to the main body ECU.
The main body ECU applies voltage to the door unlock detection switch via terminal LSWD. When the door unlock detection switch is on (there is continuity between the switch terminals), a lock state signal is input to the main body ECU. When the switch is off (there is no continuity between the switch terminals), an unlock state signal is input.

## WIRING DIAGRAM

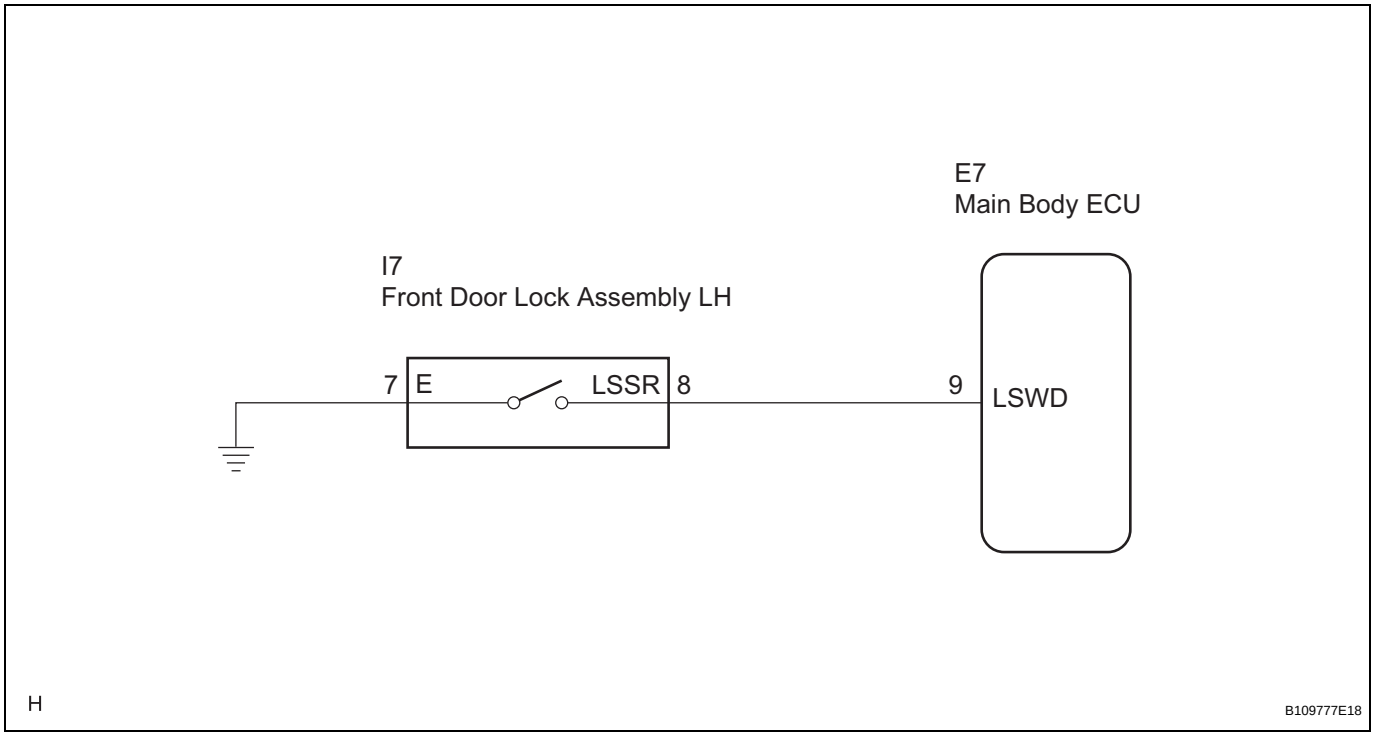


## INSPECTION PROCEDURE

DL

| 1 | READ VALUE OF DATA LIST (DOOR UNLOCK DETECTION SWITCH) |
|---|---|

(a) Check the DATA LIST to ensure proper function of the door unlock detection switch.

**MAIN BODY:**

| Item | Measurement Item / Display (Range) | Normal Condition | Diagnostic Note |
|---|---|---|---|
| D LOCK POS SW | Driver side door unlock detection switch signal /ON or OFF | ON: Driver side door is unlocked<br>OFF: Driver side door is locked | - |

**OK:**
**The display is as specified in the normal condition column.**

**NG** → **Go to step 2**

**OK**

**PROCEED TO NEXT CIRCUIT INSPECTION SHOWN IN PROBLEM SYMPTOMS TABLE**

## 2 INSPECT FRONT DOOR LOCK ASSEMBLY (DOOR UNLOCK DETECTION SWITCH)

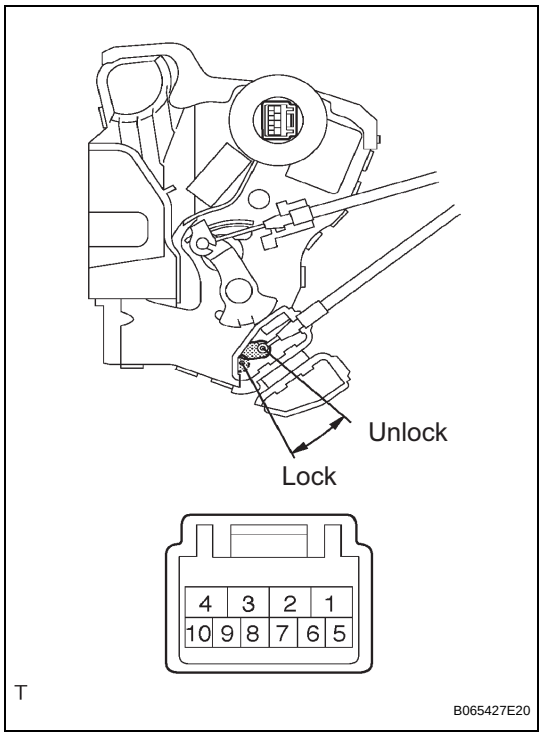


(a) Remove the front door lock assembly LH.
(b) Measure the resistance according to the value(s) in the table below.

**Standard resistance**

| Tester Connection | Measurement Condition | Door Lock Condition | Specified Condition |
|---|---|---|---|
| 7 - 8 | Battery positive (+) → Terminal 4 Battery negative (-) → Terminal 1 | Lock | 10 kΩ or higher |
| 7 - 8 | Battery positive (+) → Terminal 1 Battery negative (-) → Terminal 4 | Unlock | Below 1 Ω |

**NG** → **REPLACE FRONT DOOR LOCK ASSEMBLY**

**OK**

## 3 CHECK WIRE HARNESS (FRONT DOOR LOCK ASSEMBLY - MAIN BODY ECU)

**Wire Harness Side:**

I7
Front Door Lock Assembly LH

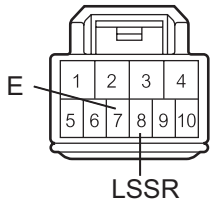


E7
Main Body ECU

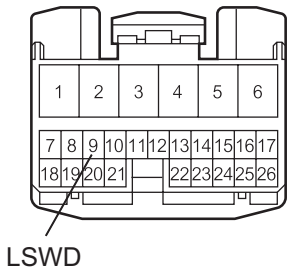


H

B112606E01

(a) Disconnect the front door lock assembly LH connector.
(b) Disconnect the main body ECU connector.
(c) Measure the resistance according to the value(s) in the table below.

**Standard resistance**

| Tester Connection (Symbols) | Condition | Specified Condition |
|---|---|---|
| I7-8 (LSSR) - E7-9 (LSWD) | Always | Below 1 Ω |
| I7-8 (LSSR) - Body ground | Always | 10 kΩ or higher |
| I7-7 (E) - Body ground | Always | Below 1 Ω |

**NG** → **REPAIR OR REPLACE HARNESS OR CONNECTOR**

**OK**

**REPLACE MAIN BODY ECU**

# Front Passenger Side Door UNLOCK Detection Switch Circuit

## DESCRIPTION

The front passenger door unlock detection switch is built into the front passenger door lock assembly. The switch turns on when the front passenger door is locked and turns off when the door is unlocked.
The main body ECU is connected to the front passenger door lock assembly via terminal LSWP and front passenger door lock/unlock state signals are input to the ECU.
The main body ECU applies voltage to the door unlock detection switch via terminal LSWP. When the door unlock detection switch is on (there is continuity between the switch terminals), a lock state signal is input to the ECU. When the switch is off (there is no continuity between the switch terminals), an unlock state signal is input.

## WIRING DIAGRAM

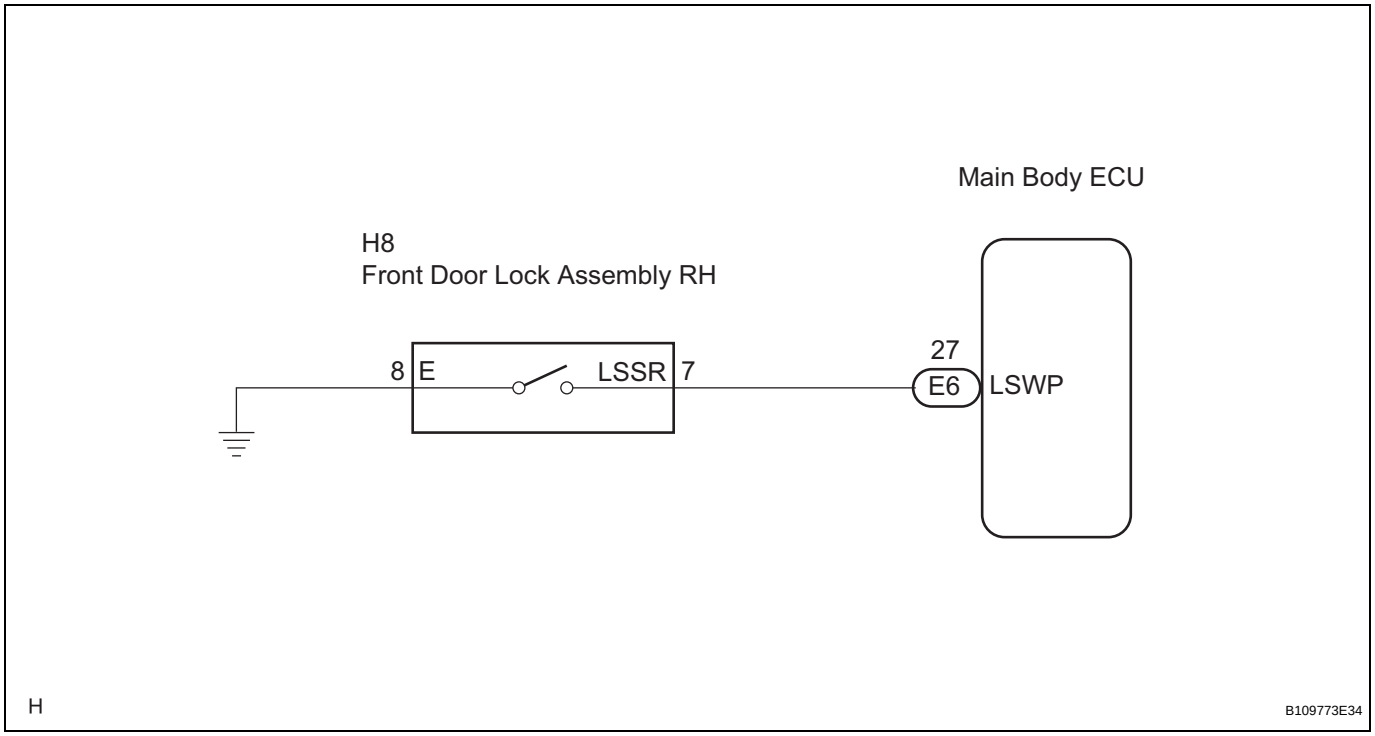


## INSPECTION PROCEDURE

| 1 | READ VALUE OF DATA LIST (DOOR UNLOCK DETECTION SWITCH) |
|---|---|

(a) Check the DATA LIST to ensure proper function of the door unlock detection switch.

**MAIN BODY:**

| Item | Measurement Item / Display (Range) | Normal Condition | Diagnostic Note |
|---|---|---|---|
| P LOCK POS SW | Passenger side door lock position switch signal /ON or OFF | ON: Passenger side door lock is in UNLOCK position<br>OFF: Passenger side door lock is in LOCK position | - |

**OK:**

**The display is as specified in the normal condition column.**

DL

**NG** → **Go to step 2**

**OK**

**PROCEED TO NEXT CIRCUIT INSPECTION SHOWN IN PROBLEM SYMPTOMS TABLE**

## 2 INSPECT FRONT DOOR LOCK ASSEMBLY (DOOR UNLOCK DETECTION SWITCH)

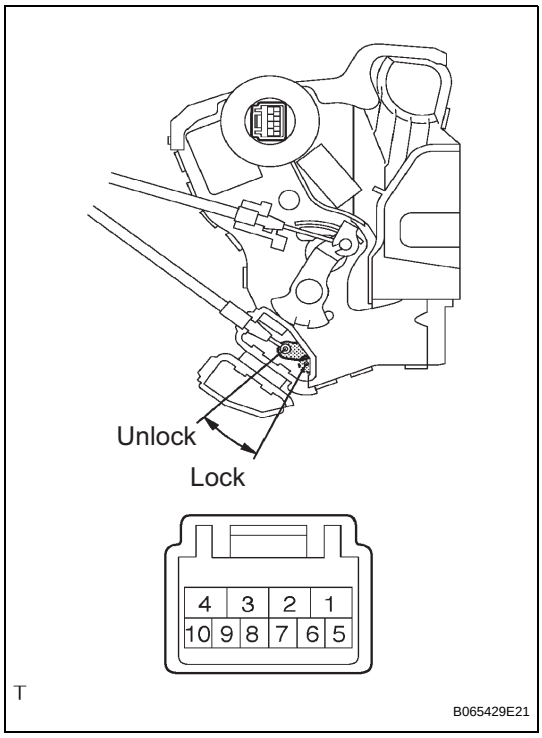


(a) Remove the front door lock assembly RH.
(b) Measure the resistance according to the value(s) in the table below.

**Standard resistance**

| Tester Connection | Measurement Condition | Door Lock Condition | Specified Condition |
|---|---|---|---|
| 7 - 8 | Battery positive (+) → Terminal 4 Battery negative (-) → Terminal 1 | LOCK | 10 kΩ or higher |
| 7 - 8 | Battery positive (+) → Terminal 1 Battery negative (-) → Terminal 4 | UNLOCK | Below 1 Ω |

**NG** → **REPLACE FRONT DOOR LOCK ASSEMBLY**

**OK**

## 3 CHECK WIRE HARNESS (FRONT DOOR LOCK ASSEMBLY - MAIN BODY ECU)

**Wire Harness Side:**

H8
Front Door Lock Assembly RH

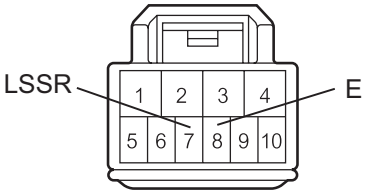


E6
Main Body ECU

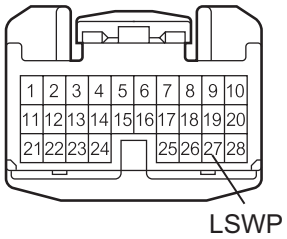


H

B111708E12

(a) Disconnect the front door lock assembly RH connector.
(b) Disconnect the ECU connector.
(c) Measure the resistance according to the value(s) in the table below.

**Standard resistance**

| Tester Connection (Symbols) | Condition | Specified Condition |
|---|---|---|
| H8-7 (LSSR) - E6-27 (LSWP) | Always | Below 1 Ω |
| H8-7 (LSSR) - Body ground | Always | 10 kΩ or higher |
| H8-8 (E) - Body ground | Always | Below 1 Ω |

**NG** → **REPAIR OR REPLACE HARNESS OR CONNECTOR**

**OK**

**REPLACE MAIN BODY ECU**

# Rear Door UNLOCK Detection Switch LH Circuit

## DESCRIPTION

The rear left door unlock detection switch is built into the rear left door lock assembly. The switch turns on when the rear left door is locked and turns off when the door is unlocked.
The main body ECU is connected to the rear left door lock assembly via terminal LSWL (w/ Smart key system) or LSR (w/o Smart key system) and rear left door lock/unlock state signals are input to the ECU. The main body ECU applies voltage to the door unlock detection switch via terminal LSWL (w/ Smart key system) or LSR (w/o Smart key system). When the door unlock detection switch is on (there is continuity between the switch terminals), a lock state signal is input to the ECU. When the switch is off (there is no continuity between the switch terminals), an unlock state signal is input.

## WIRING DIAGRAM

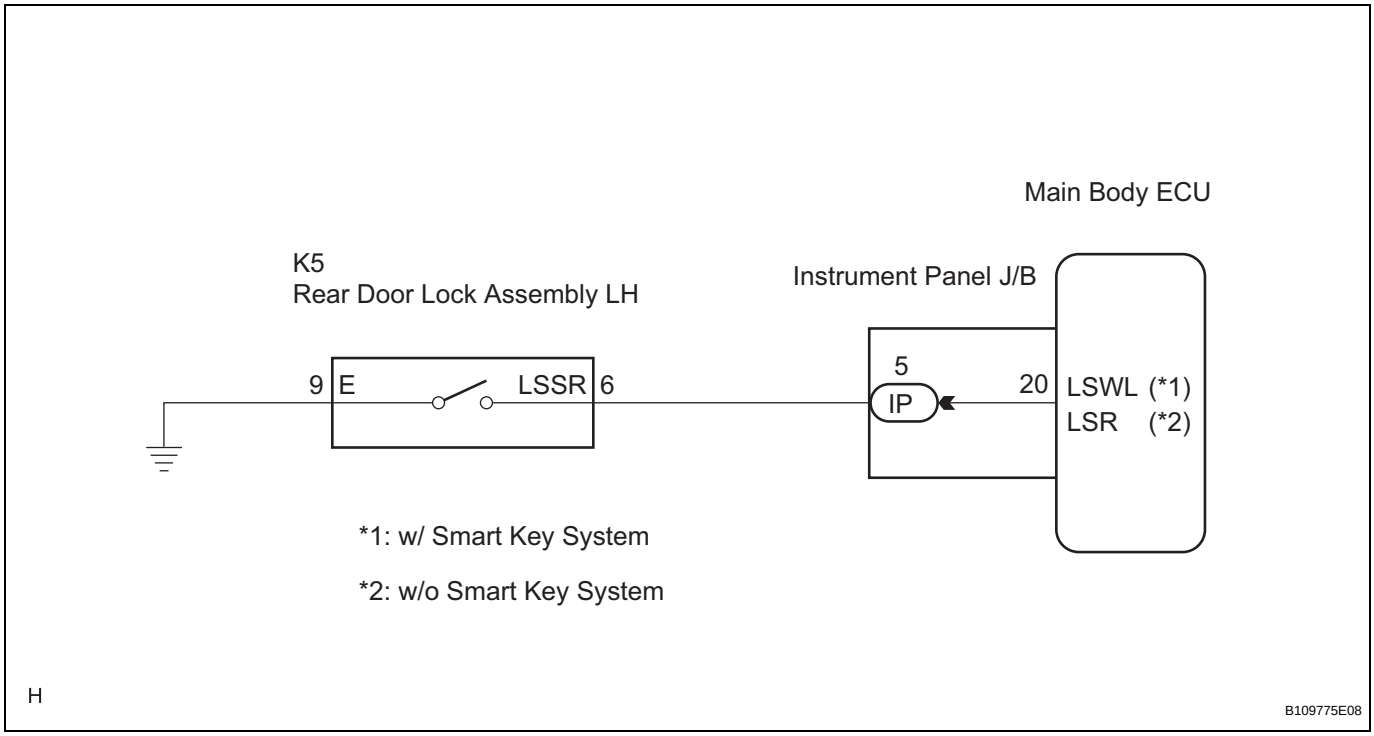


## INSPECTION PROCEDURE

HINT:
Start the inspection from step 1 when w/ smart key system or w/o smart key system and w/ theft deterrent system, and start from step 2 when w/o smart key system and w/o theft deterrent system.

DL

| 1 | READ VALUE OF DATA LIST (UNLOCK DETECTION SWITCH) |
|---|---|

(a) Check the DATA LIST to ensure proper function of the door unlock detection switch.

**MAIN BODY:**

| Item | Measurement Item / Display (Range) | Normal Condition | Diagnostic Note |
|---|---|---|---|
| RL LOCK POS SW | Rear left door lock position switch signal / ON or OFF | ON: Rear left door lock is in UNLOCK position<br>OFF: Rear left door lock is in LOCK position | - |

**OK:**
**The display is as specified in the normal condition column.**

**NG** → **Go to step 2**

**OK**

**PROCEED TO NEXT CIRCUIT INSPECTION SHOWN IN PROBLEM SYMPTOMS TABLE**

## 2 INSPECT REAR DOOR LOCK ASSEMBLY (UNLOCK DETECTION SWITCH)

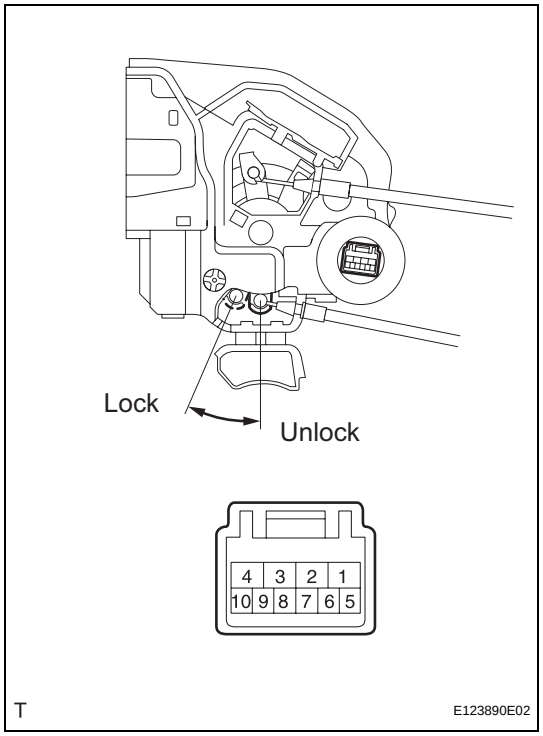


(a) Remove the rear door lock assembly LH.
(b) Measure the resistance according to the value(s) in the table below.

**Standard resistance**

| Tester Connection | Measurement Condition | Door Lock Condition | Specified Condition |
|---|---|---|---|
| 6 - 9 | Battery positive (+) → Terminal 4 Battery negative (-) → Terminal 1 | Lock | 10 kΩ or higher |
| 6 - 9 | Battery positive (+) → Terminal 1 Battery negative (-) → Terminal 4 | Unlock | Below 1 Ω |

**NG** → **REPLACE REAR DOOR LOCK ASSEMBLY**

**OK**

## 3 CHECK WIRE HARNESS (REAR DOOR LOCK ASSEMBLY - MAIN BODY ECU)

(a) Disconnect the rear door lock assembly LH connector.

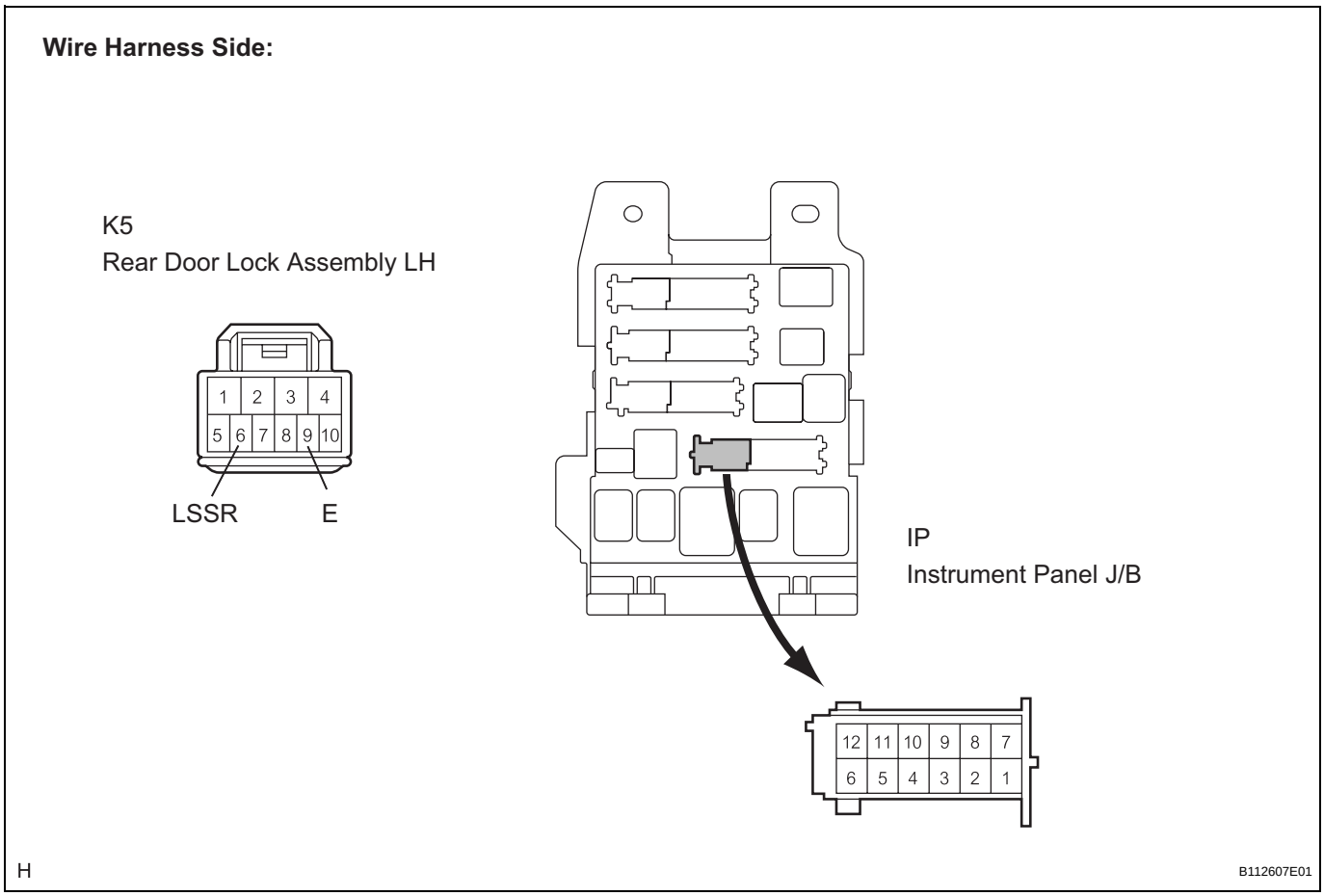


(b) Disconnect the ECU (instrument panel J/B) connector.
(c) Measure the resistance according to the value(s) in the table below.

**Standard resistance**

| Tester Connection (Symbols) | Condition | Specified Condition |
|---|---|---|
| K5-6 (LSSR) - IP-5 | Always | Below 1 Ω |
| K5-6 (LSSR) - Body ground | Always | 10 kΩ or higher |
| K5-9 (E) - Body ground | Always | Below 1 Ω |

NG → **REPAIR OR REPLACE HARNESS OR CONNECTOR**

DL

OK

**REPLACE MAIN BODY ECU (INSTRUMENT PANEL J/B)**

# Rear Door UNLOCK Detection Switch RH Circuit

## DESCRIPTION

The rear right door unlock detection switch is built into the rear right door lock assembly. The switch turns on when the rear right door is locked and turns off when the door is unlocked.
The main body ECU is connected to the rear right door lock assembly via terminal LSWR (w/ smart key system), LSWL (w/o smart key system), and rear right door lock/unlock state signals are input to the ECU.
The main body ECU applies voltage to the door unlock detection switch via terminal LSWR (w/ smart key system), LSWL (w/o smart key system). When the door unlock detection switch is on (there is continuity between the switch terminals), a lock state signal is input to the ECU. When the switch is off (there is no continuity between the switch terminals), an unlock state signal is input.

## WIRING DIAGRAM

**w/ SMART KEY SYSTEM:**

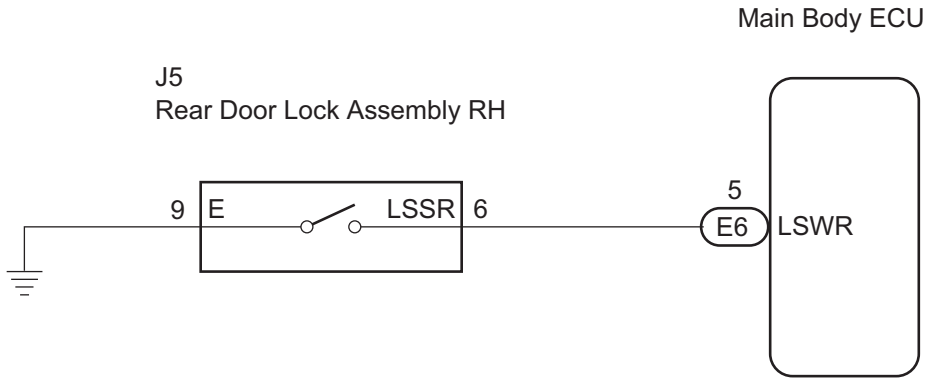


H

B109773E36

**w/o SMART KEY SYSTEM:**

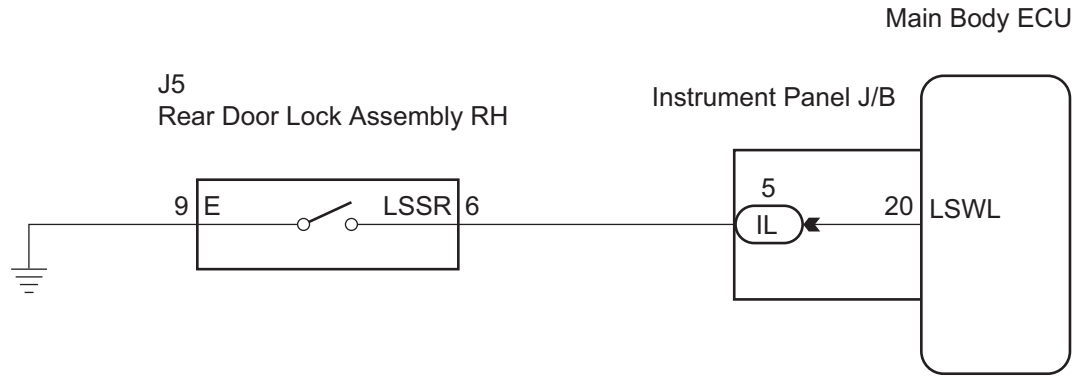


## INSPECTION PROCEDURE

HINT:
Start the inspection from step 1 when w/ smart key system or w/o smart key system and w/ theft deterrent system, and start from step 2 when w/o smart key system and w/o theft deterrent system.

| 1 | READ VALUE OF DATA LIST (UNLOCK DETECTION SWITCH) |
|---|---|

(a) Check the DATA LIST to ensure proper function of the door unlock detection switch.

**MAIN BODY:**

| Item | Measurement Item / Display (Range) | Normal Condition | Diagnostic Note |
|---|---|---|---|
| RR LOCK POS SW | Rear right door lock position switch signal / ON or OFF | ON: Rear right door lock is in UNLOCK position<br>OFF: Rear right door lock is in LOCK position | - |

**OK:**
**The display is as specified in the normal condition column.**

**NG** → **Go to step 2**

**OK**

**PROCEED TO NEXT CIRCUIT INSPECTION SHOWN IN PROBLEM SYMPTOMS TABLE**

| 2 | INSPECT REAR DOOR LOCK ASSEMBLY (UNLOCK DETECTION SWITCH) |
|---|---|

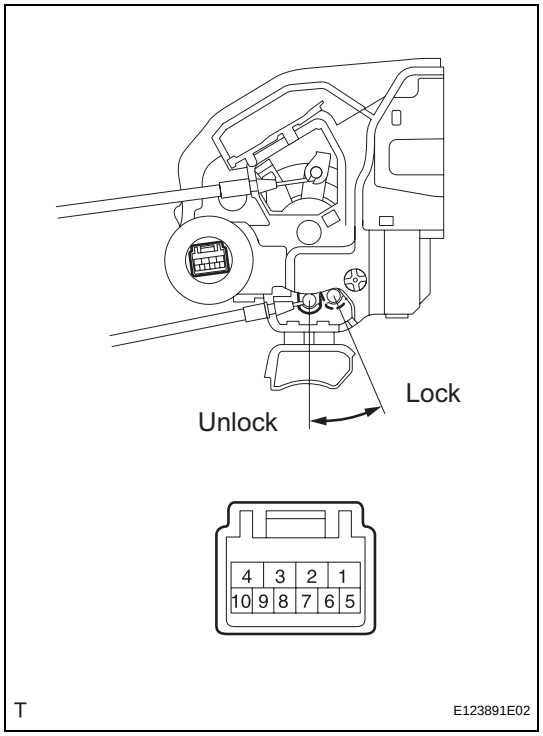


(a) Remove the rear door lock assembly RH.
(b) Measure the resistance according to the value(s) in the table below.

**Standard resistance**

| Tester Connection | Measurement Condition | Door Lock Condition | Specified Condition |
|---|---|---|---|
| 6 - 9 | Battery positive (+) → Terminal 4 Battery negative (-) → Terminal 1 | Lock | 10 kΩ or higher |
| 6 - 9 | Battery positive (+) → Terminal 1 Battery negative (-) → Terminal 4 | Unlock | Below 1 Ω |

**NG** → **REPLACE REAR DOOR LOCK ASSEMBLY**

**OK**

| 3 | CHECK WIRE HARNESS (REAR DOOR LOCK - MAIN BODY ECU (INSTRUMENT PANEL J/B)) |
|---|---|

(a) Disconnect the rear door lock assembly RH connector.

**Wire Harness Side:**

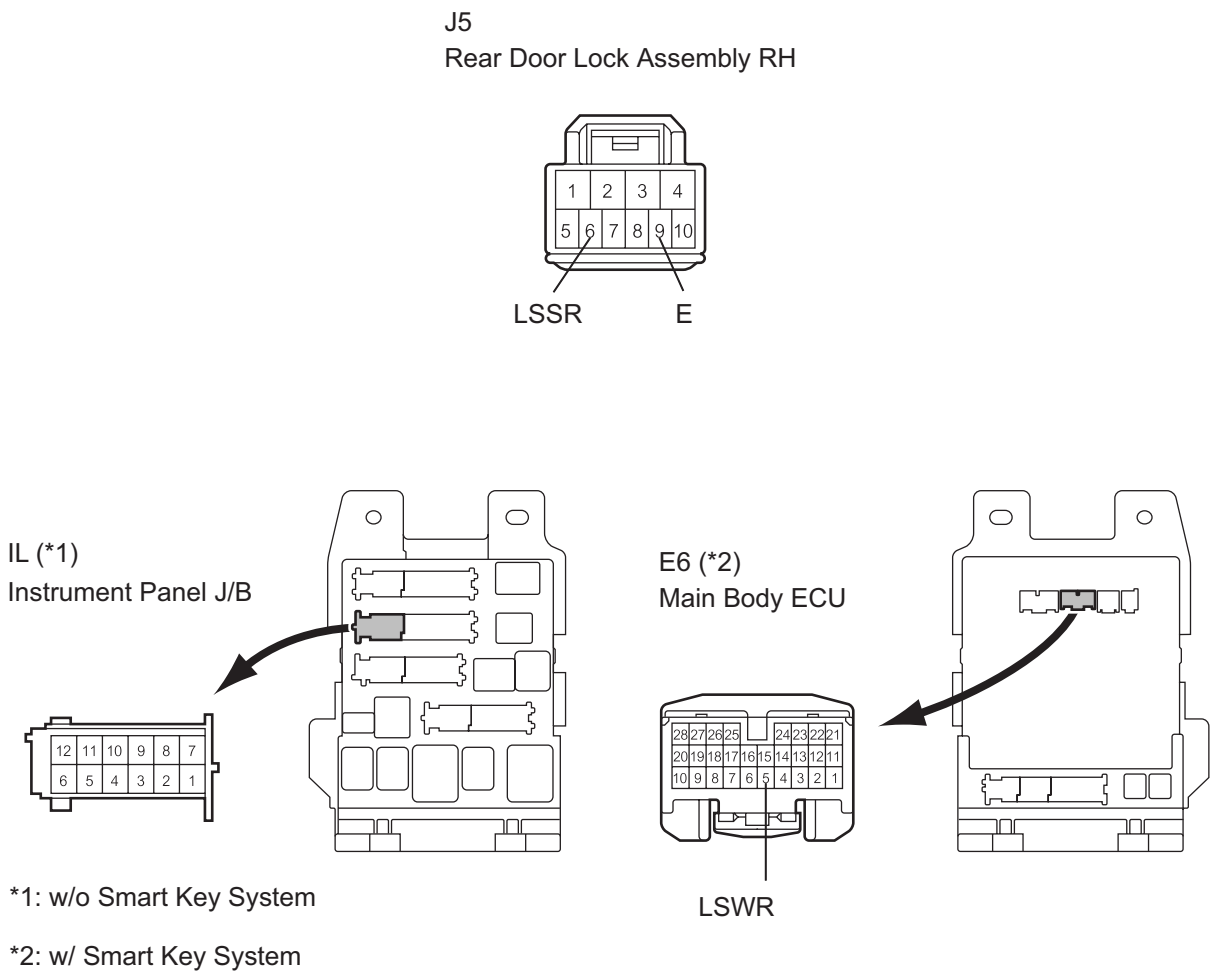


(b) Disconnect the ECU (instrument panel J/B) connector.

(c) Measure the resistance according to the value(s) in the table below.

**Standard resistance**

| Tester Connection (Symbols) | Condition | Specified Condition |
|---|---|---|
| J5-6 (LSSR) - IL-5 (*1) | Always | Below 1 Ω |
| J5-6 (LSSR) - E6-5 (LSWR) (*2) | Always | Below 1 Ω |
| J5-6 (LSSR) - Body ground | Always | 10 kΩ or higher |
| J5-9 (E) - Body ground | Always | Below 1 Ω |

*1: w/o SMART KEY SYSTEM
*2: w/ SMART KEY SYSTEM

**NG** → **REPAIR OR REPLACE HARNESS OR CONNECTOR**

**OK**

**REPLACE MAIN BODY ECU (INSTRUMENT PANEL J/B)**

# Driver Side Door Lock Motor Circuit

## DESCRIPTION

The driver's door lock motor is built into the driver's door lock assembly.
The main body ECU controls the driver's door lock motor to lock/unlock the driver's door. This ECU applies current from terminal ACT+ to terminal ACTD to operate the motor to lock the door. It reverses the direction of the current flow to operate the motor to unlock the door.

## WIRING DIAGRAM

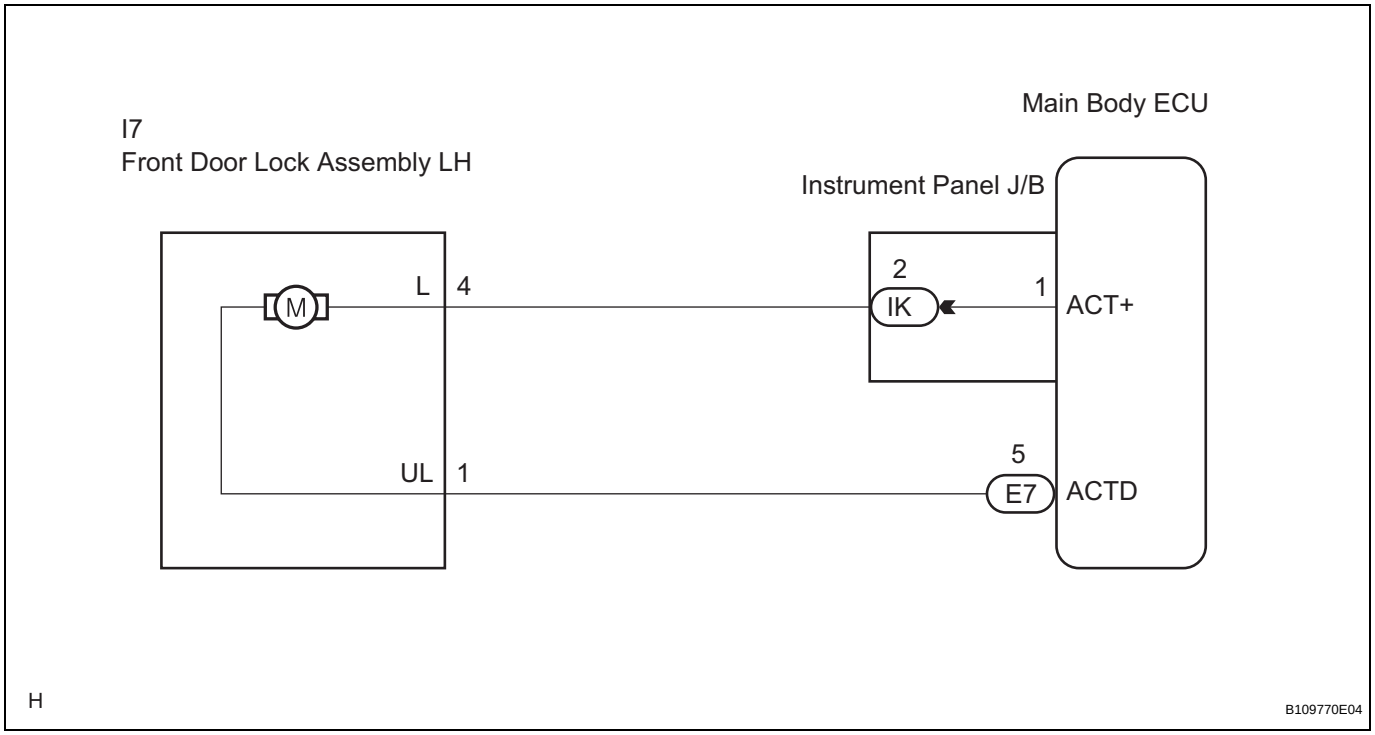

## INSPECTION PROCEDURE

| 1 | **INSPECT FRONT DOOR LOCK ASSEMBLY (DOOR LOCK MOTOR)** |
|---|---|

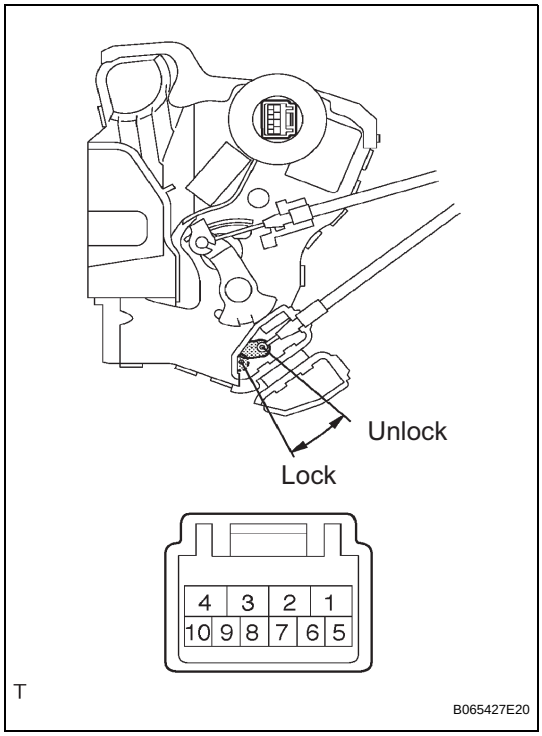


(a) Remove the front door lock assembly LH.
(b) Apply battery voltage and check operation of the door lock motor.
**OK**

| Measurement Condition | Specified Condition |
|---|---|
| **Battery positive (+) → Terminal 4<br>Battery negative (-) → Terminal 1** | **Lock** |
| **Battery positive (+) → Terminal 1<br>Battery negative (-) → Terminal 4** | **Unlock** |

**NG** → **REPLACE FRONT DOOR LOCK ASSEMBLY**

**OK**

| 2 | **CHECK WIRE HARNESS (FRONT DOOR LOCK - MAIN BODY ECU (INSTRUMENT PANEL J/B))** |
|---|---|

(a) Disconnect the front door lock assembly LH connector.

**Wire Harness Side:**

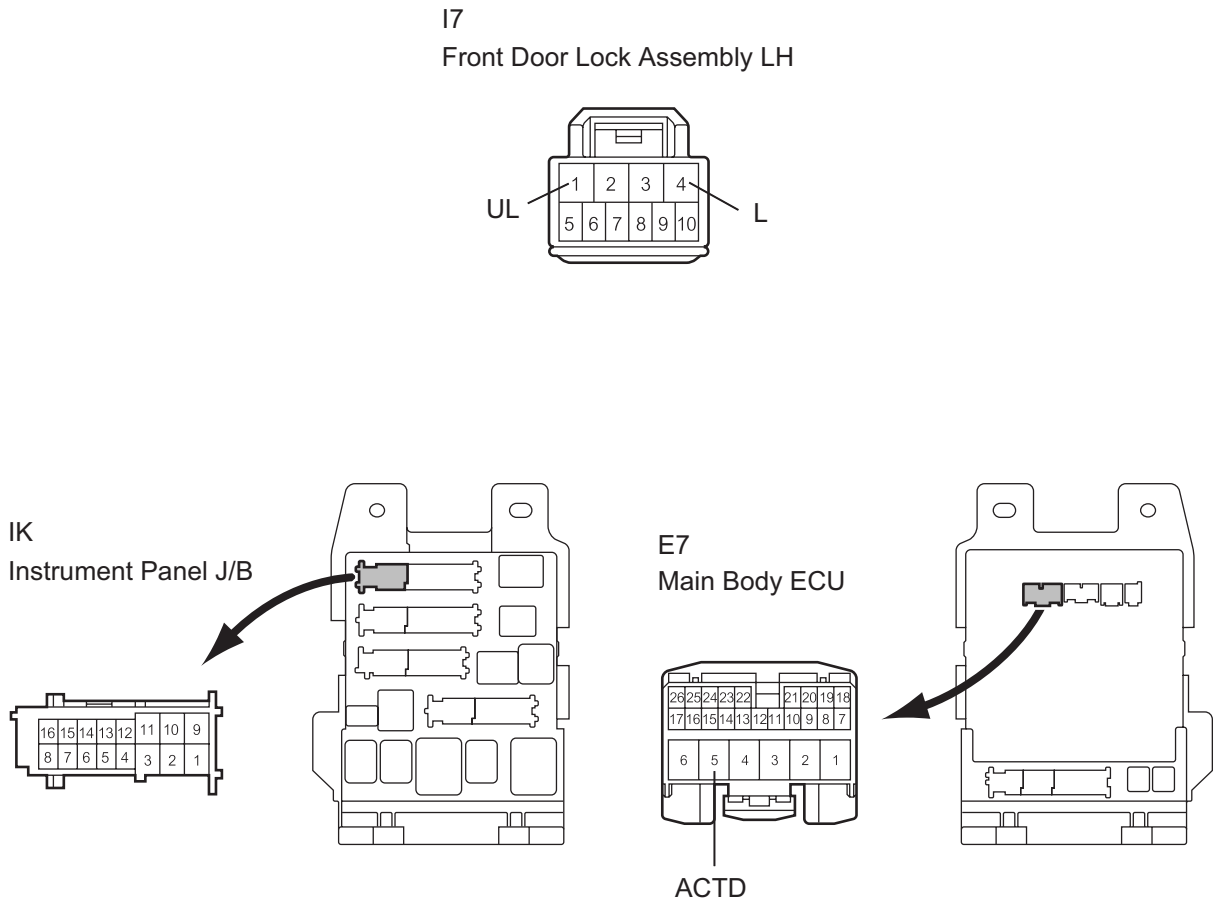


H B112609E01

(b) Disconnect the ECU (instrument panel J/B) connector.

(c) Measure the resistance according to the value(s) in the table below.

**Standard resistance**

| Tester Connection (Symbols) | Condition | Specified Condition |
|---|---|---|
| I7-4 (L) - IK-2 | Always | Below 1 Ω |
| I7-1 (UL) - E7-5 (ACTD) | Always | Below 1 Ω |
| IK-2 - Body ground | Always | 10 kΩ or higher |
| E7-5 (ACTD) - Body ground | Always | 10 kΩ or higher |

DL

**NG** → **REPAIR OR REPLACE HARNESS OR CONNECTOR**

**OK**

**PROCEED TO NEXT CIRCUIT INSPECTION SHOWN IN PROBLEM SYMPTOMS TABLE**

# Front Passenger Side Door Lock Motor Circuit

## DESCRIPTION

The front passenger door lock motor is built into the front passenger door lock assembly.
The main body ECU controls the front passenger door lock motor to lock/unlock the front passenger door. This ECU applies current from terminal ACT+ to terminal ACT- to operate the motor to lock the door. It reverses the direction of the current flow to operate the motor to unlock the door.

## WIRING DIAGRAM

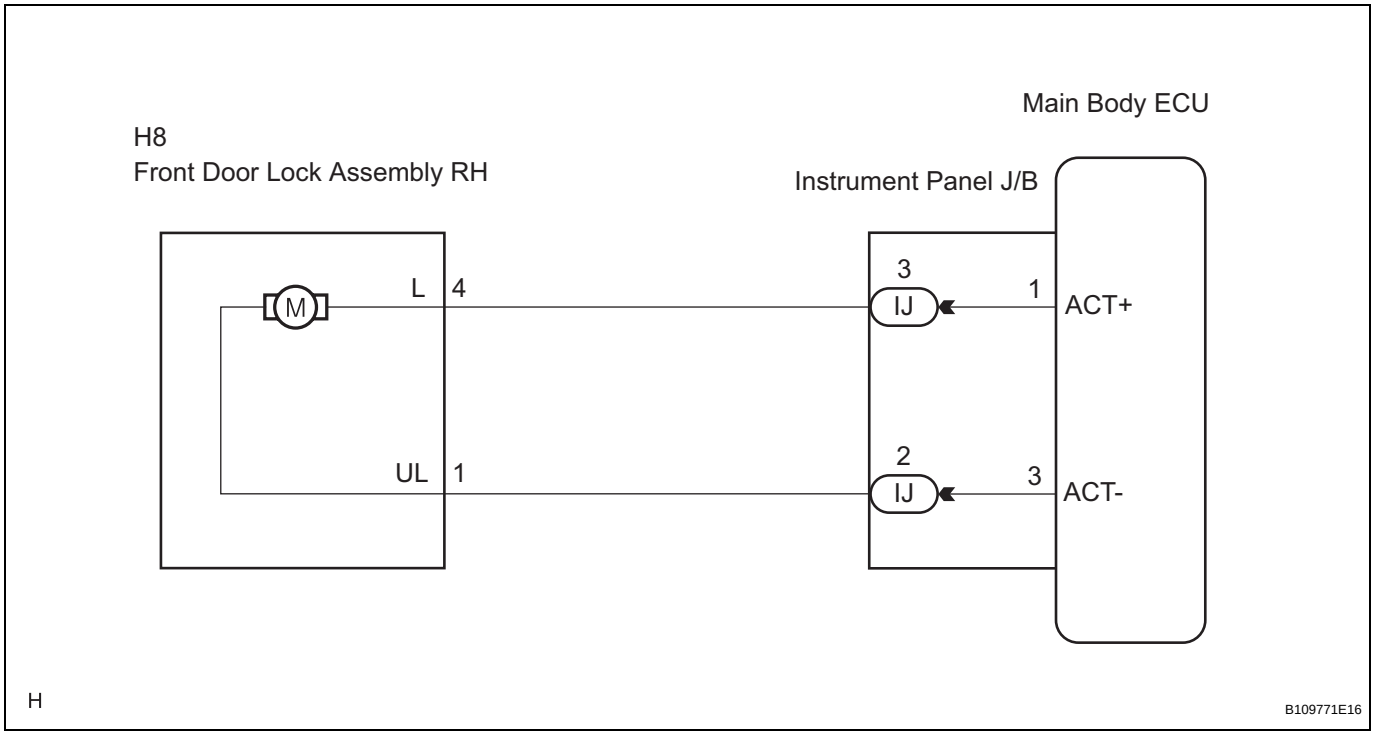

## INSPECTION PROCEDURE

| 1 | **INSPECT FRONT DOOR LOCK ASSEMBLY (DOOR LOCK MOTOR)** |
|---|---|

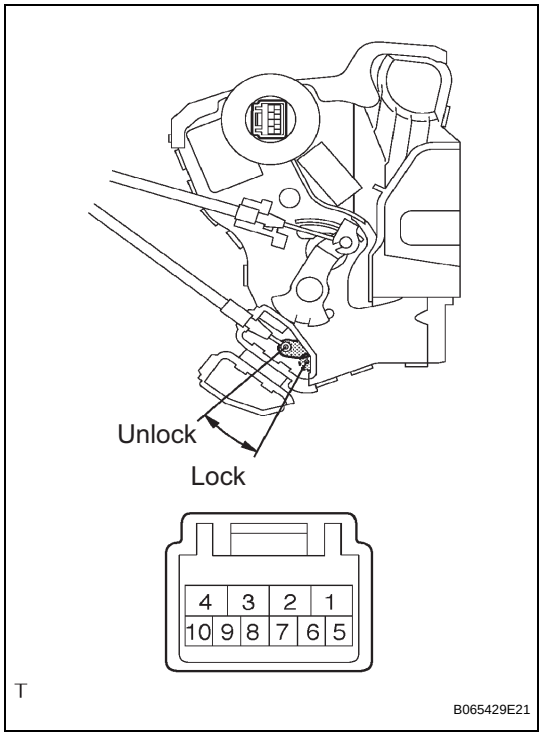


(a) Remove the front door lock assembly RH.
(b) Apply battery voltage and check operation of the door lock motor.
**OK**

| Measurement Condition | Specified Condition |
|---|---|
| **Battery positive (+) → Terminal 4<br>Battery negative (-) → Terminal 1** | **Lock** |
| **Battery positive (+) → Terminal 1<br>Battery negative (-) → Terminal 4** | **Unlock** |

**NG** → **REPLACE FRONT DOOR LOCK ASSEMBLY**

**OK**

| 2 | **CHECK WIRE HARNESS (FRONT DOOR LOCK - MAIN BODY ECU (INSTRUMENT PANEL J/B))** |
|---|---|

(a) Disconnect the front door lock assembly RH connector.

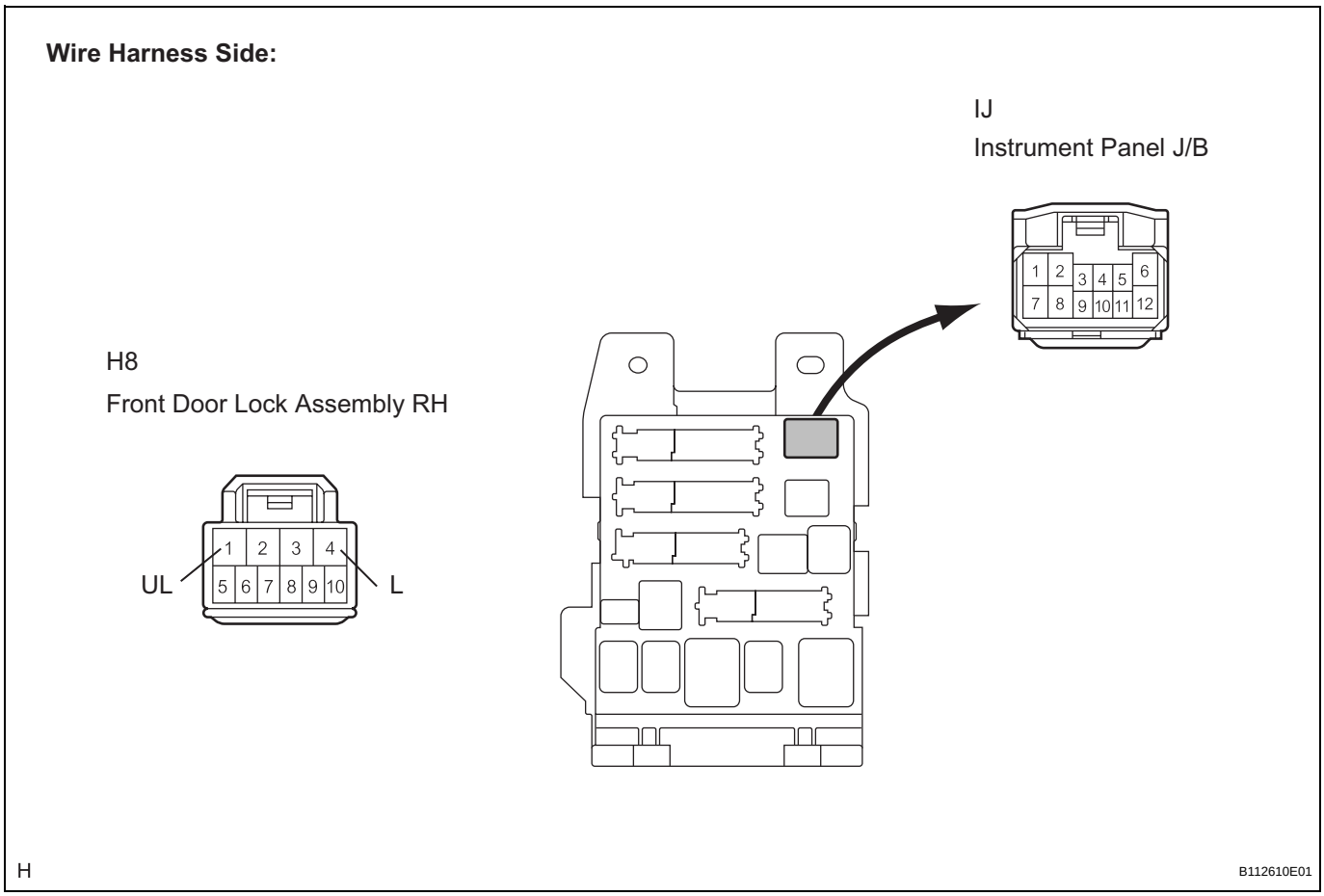


(b) Disconnect the ECU (instrument panel J/B) connector.
(c) Measure the resistance according to the value(s) in the table below.

**Standard resistance**

| Tester Connection (Symbols) | Condition | Specified Condition |
|---|---|---|
| H8-4 (L) - IJ-1 | Always | Below 1 Ω |
| H8-1 (UL) - IJ-2 | Always | Below 1 Ω |
| IJ-1 - Body ground | Always | 10 kΩ or higher |
| IJ-2 - Body ground | Always | 10 kΩ or higher |

**NG** → **REPAIR OR REPLACE HARNESS OR CONNECTOR**

DL

**OK**

**PROCEED TO NEXT CIRCUIT INSPECTION SHOWN IN PROBLEM SYMPTOMS TABLE**

# Rear Door Lock Motor LH Circuit

## DESCRIPTION

The rear left door lock motor is built into the rear left door lock assembly.
The main body ECU controls the rear left door lock motor to lock/unlock the rear left door. This ECU applies current from terminal ACT+ to terminal ACT- to operate the motor to lock the door. It reverses the direction of the current flow to operate the motor to unlock the door.

## WIRING DIAGRAM

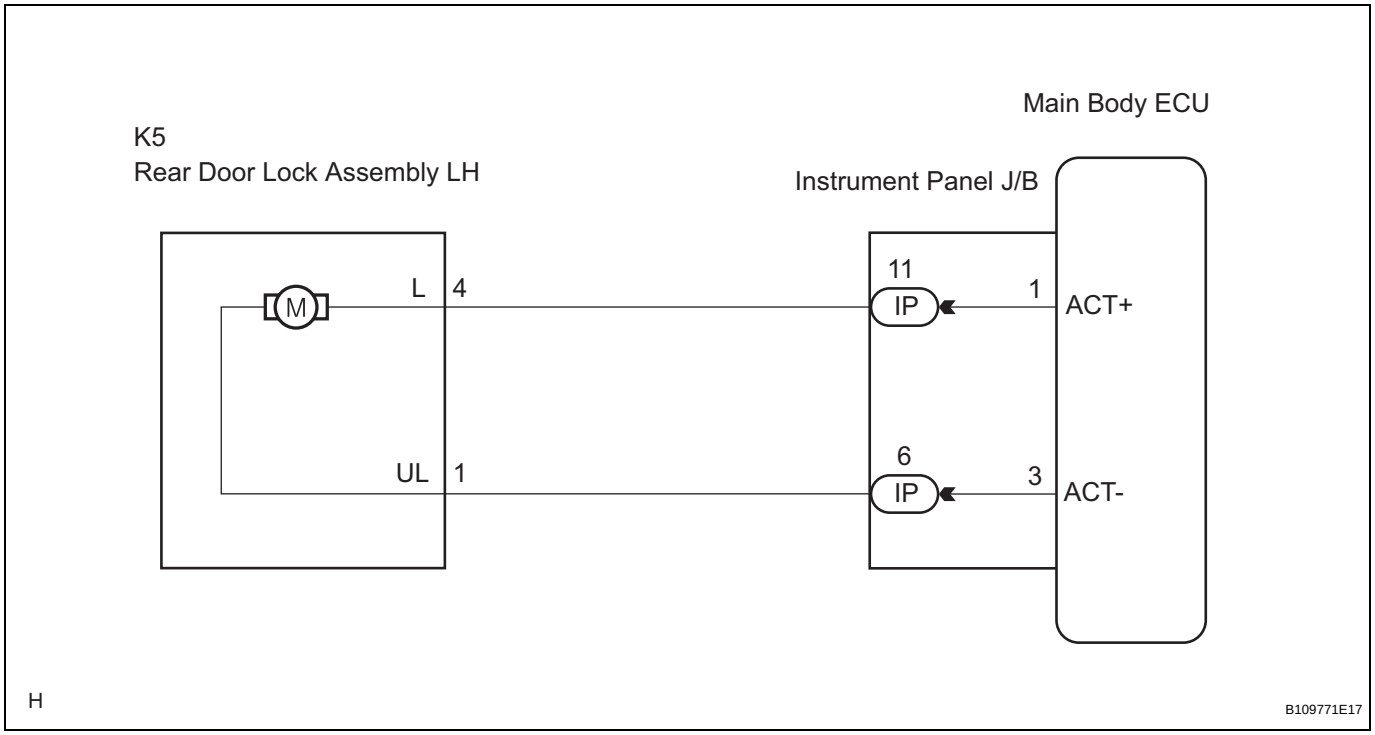

## INSPECTION PROCEDURE

| 1 | **INSPECT REAR DOOR LOCK ASSEMBLY** |
|---|---|

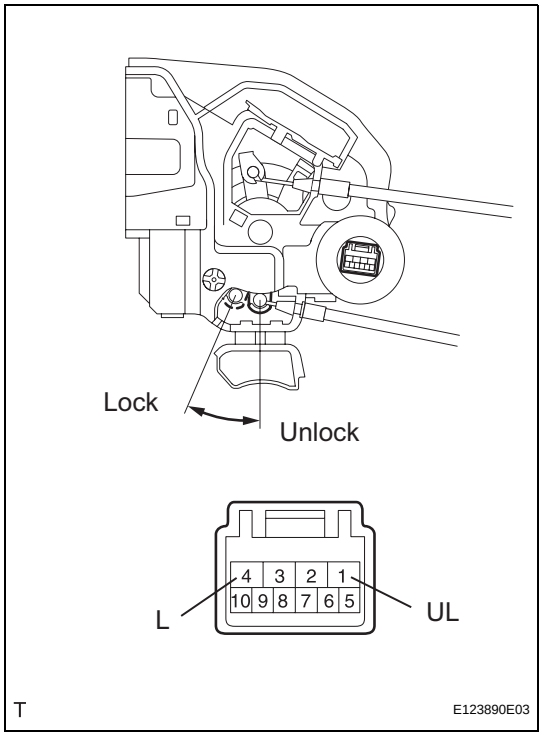


(a) Remove the rear door lock assembly LH.
(b) Apply battery voltage and check operation of the door lock motor.
**OK**

| Measurement Condition | Specified Condition |
|---|---|
| **Battery positive (+) → Terminal 4<br>Battery negative (-) → Terminal 1** | **Lock** |
| **Battery positive (+) → Terminal 1<br>Battery negative (-) → Terminal 4** | **Unlock** |

**NG** → **REPLACE REAR DOOR LOCK ASSEMBLY**

**OK**

| 2 | **CHECK WIRE HARNESS (REAR DOOR LOCK - MAIN BODY ECU (INSTRUMENT PANEL J/B))** |
|---|---|

(a) Disconnect the rear door lock assembly LH connector.

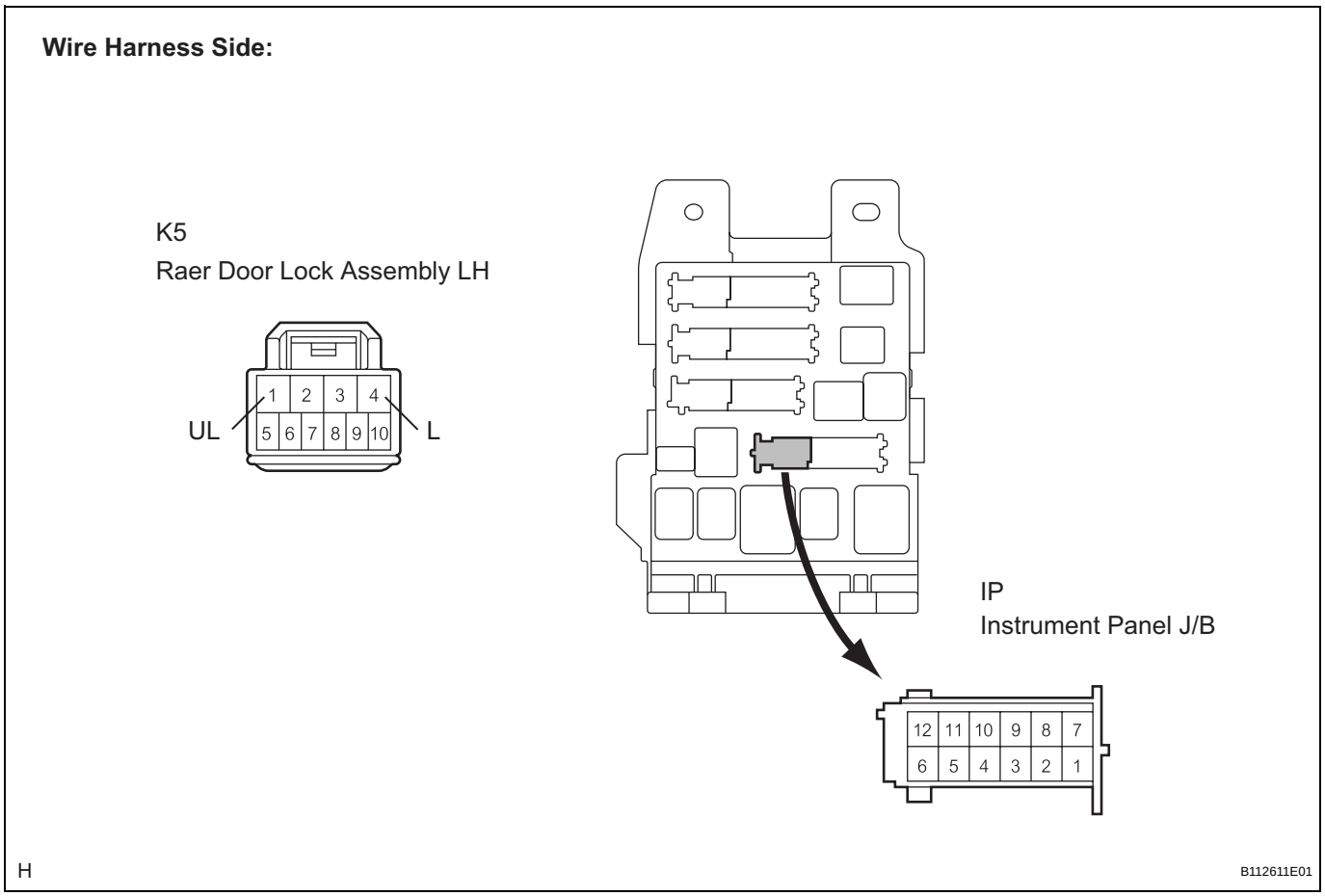


(b) Disconnect the ECU (instrument panel J/B) connector.

(c) Measure the resistance according to the value(s) in the table below.

**Standard resistance**

| Tester Connection (Symbols) | Condition | Specified Condition |
|---|---|---|
| K5-4 (L) - IP-11 | Always | Below 1 Ω |
| K5-1 (UL) - IP-6 | Always | Below 1 Ω |
| IP-11 - Body ground | Always | 10 kΩ or higher |
| IP-6 - Body ground | Always | 10 kΩ or higher |

**NG** → **REPAIR OR REPLACE HARNESS OR CONNECTOR**

**OK**

**PROCEED TO NEXT CIRCUIT INSPECTION SHOWN IN PROBLEM SYMPTOMS TABLE**

# Rear Door Lock Motor RH Circuit

## DESCRIPTION

The rear right door lock motor is built into the rear right door lock assembly.
The main body ECU controls the rear right door lock motor to lock/unlock the rear right door. This ECU applies current from terminal ACT+ to terminal ACT- to operate the motor to lock the door. It reverses the direction of the current flow to operate the motor to unlock the door.

## WIRING DIAGRAM

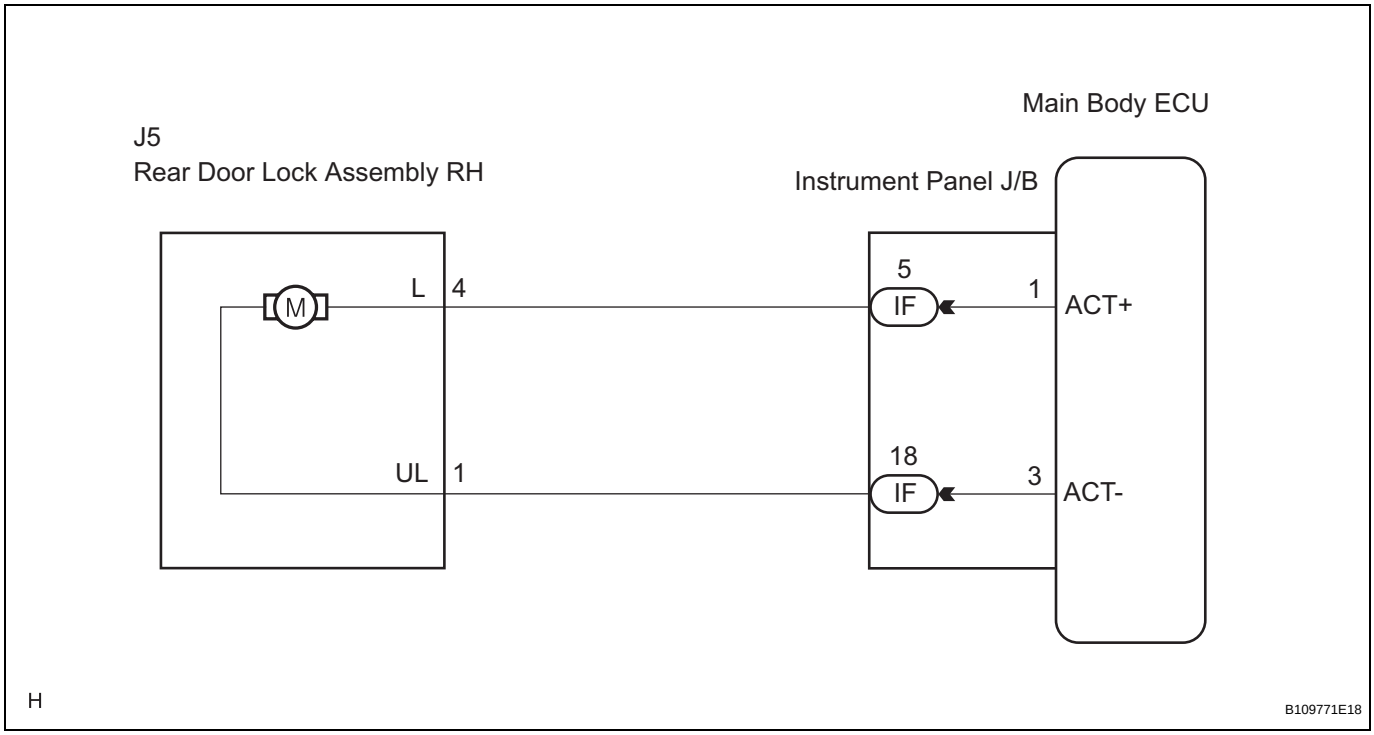

## INSPECTION PROCEDURE

| 1 | **INSPECT REAR DOOR LOCK ASSEMBLY** |
|---|---|

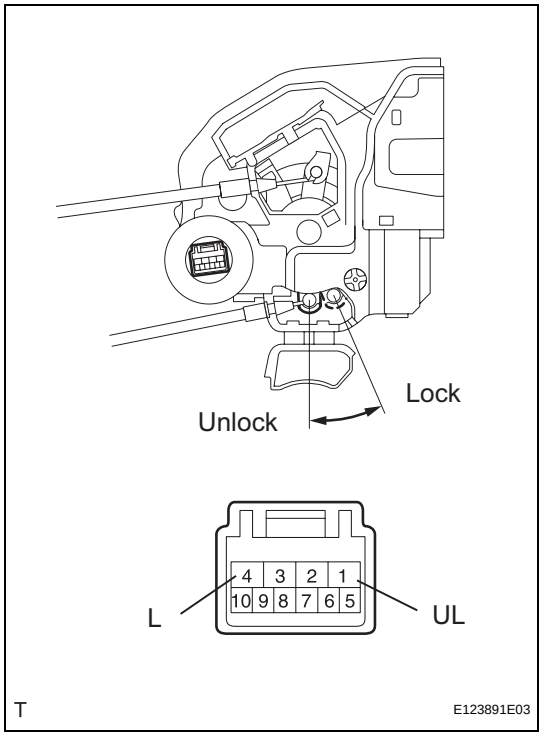


(a) Remove the rear door lock assembly RH.
(b) Apply battery voltage and check operation of the door lock motor.
**OK**

| Measurement Condition | Specified Condition |
|---|---|
| **Battery positive (+) → Terminal 4<br>Battery negative (-) → Terminal 1** | **Lock** |
| **Battery positive (+) → Terminal 1<br>Battery negative (-) → Terminal 4** | **Unlock** |

**NG** → **REPLACE REAR DOOR LOCK ASSEMBLY**

**OK**

| 2 | **CHECK WIRE HARNESS (REAR DOOR LOCK - MAIN BODY ECU (INSTRUMENT PANEL J/B))** |
|---|---|

(a) Disconnect the rear door lock assembly RH connector.

**Wire Harness Side:**

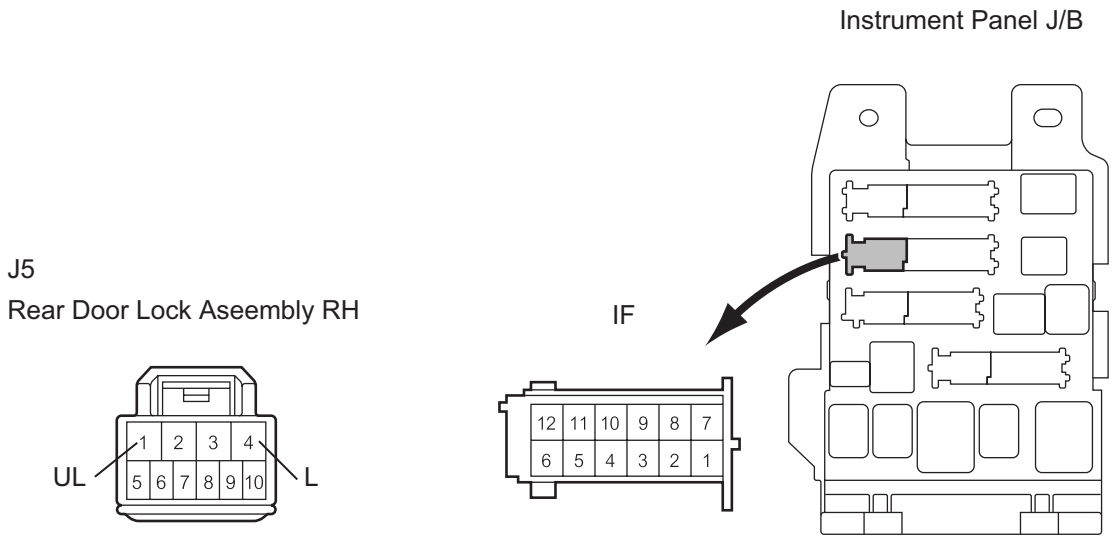


H

B112612E01

(b) Disconnect the ECU (instrument panel J/B) connector.
(c) Measure the resistance according to the value(s) in the table below.

**Standard resistance**

| Tester Connection (Symbols) | Condition | Specified Condition |
|---|---|---|
| J5-4 (L) - IF-5 | Always | Below 1 Ω |
| J5-1 (UL) - IF-18 | Always | Below 1 Ω |
| IF-5 - Body ground | Always | 10 kΩ or higher |
| IF-18 - Body ground | Always | 10 kΩ or higher |

**NG** → **REPAIR OR REPLACE HARNESS OR CONNECTOR**

DL

**OK**

**PROCEED TO NEXT CIRCUIT INSPECTION SHOWN IN PROBLEM SYMPTOMS TABLE**

# Luggage Compartment Door Courtesy Switch Circuit

## DESCRIPTION

The door courtesy switch turns on when the door is open and turns off when the door is closed.
The main body ECU detects the condition of the door courtesy switch.

## WIRING DIAGRAM

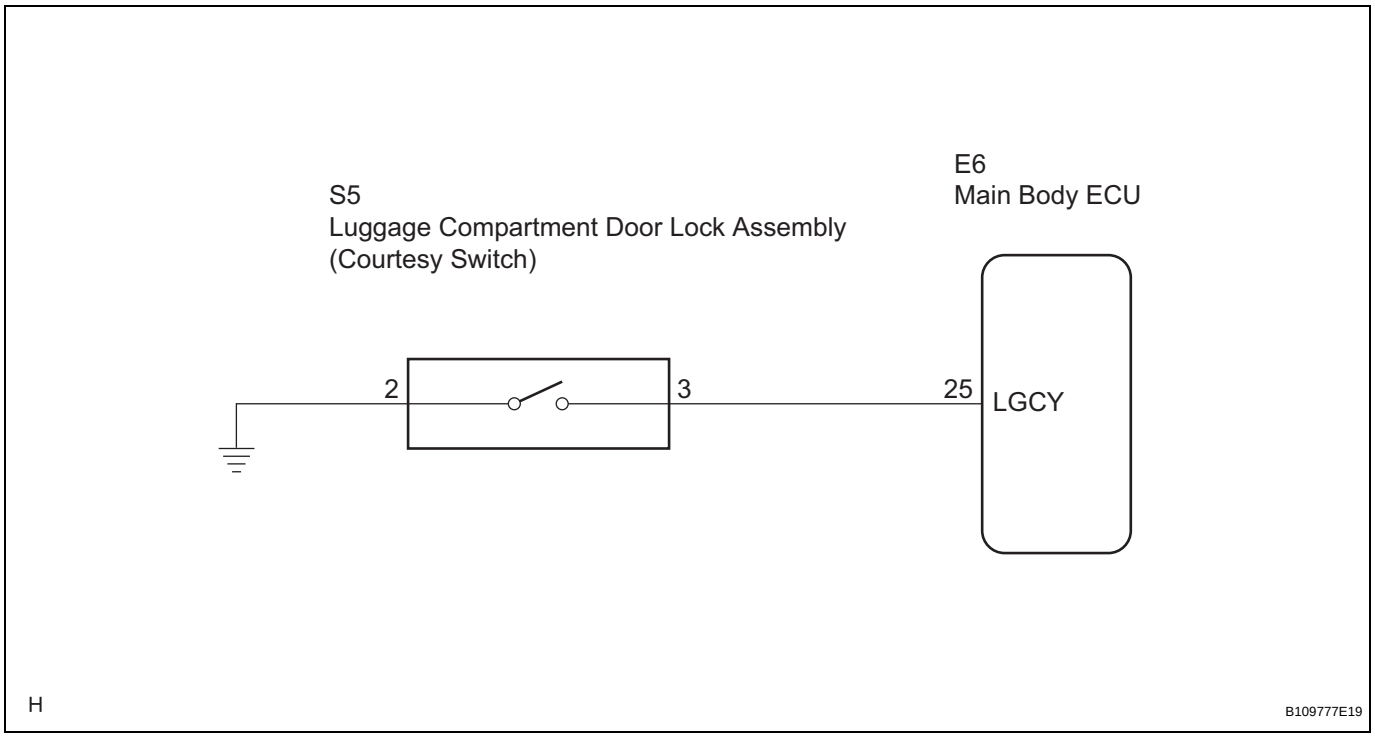


## INSPECTION PROCEDURE

| 1 | READ VALUE OF DATA LIST (DOOR COURTESY SWITCH) |
|---|---|

(a) Check the DATA LIST for proper functioning of the door courtesy switch.

**MAIN BODY:**

| Item | Measurement Item / Display (Range) | Normal Condition | Diagnostic Note |
|---|---|---|---|
| LUGG COURTSY SW | Luggage compartment door courtesy light switch signal / ON or OFF | ON: Luggage compartment door is OPEN<br>OFF: Luggage compartment door is CLOSED | - |

**OK:**
**"ON" (door is open) and "OFF" (door is closed) appear on the screen.**

**NG** → **Go to step 2**

**OK**

**PROCEED TO NEXT CIRCUIT INSPECTION SHOWN IN PROBLEM SYMPTOMS TABLE**

DL

| 2 | **INSPECT LUGGAGE COMPARTMENT DOOR LOCK ASSEMBLY (DOOR COURTESY SWITCH)** |
|---|---|

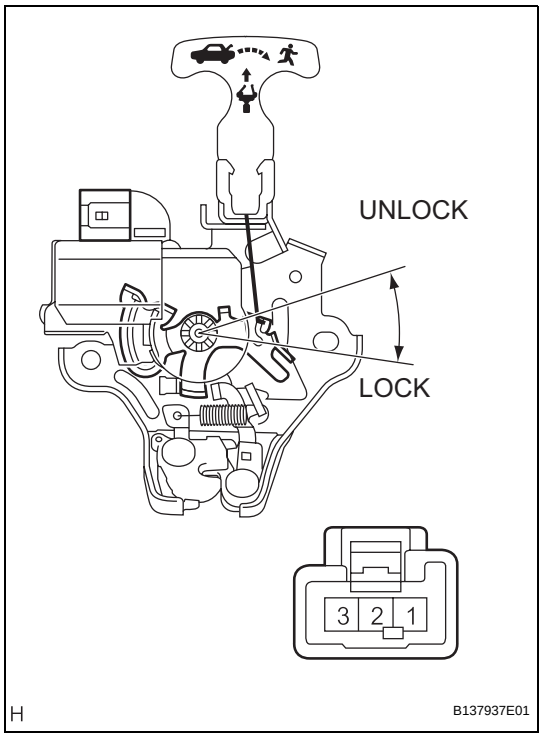


(a) Remove the luggage compartment door lock.
(b) Measure the resistance between the specified terminals of the switch.
**Standard resistance**

| Tester Connection | Condition | Specified Condition |
|---|---|---|
| 2 - 3 | UNLOCK | Below 1 Ω |
| 2 - 3 | LOCK | 10 kΩ or higher |

**NG** → **REPLACE LUGGAGE COMPARTMENT DOOR LOCK ASSEMBLY**

**OK**

| 3 | CHECK WIRE HARNESS (LUGGAGE COMPARTMENT DOOR LOCK - MAIN BODY ECU) |
|---|---|

**Wire Harness Side:**

E6 Main Body ECU

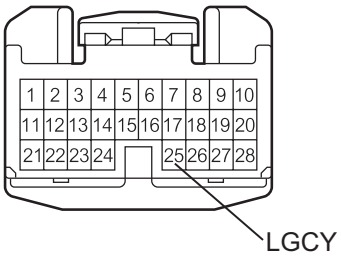


S5 Luggage Compartment Door Lock Assembly (Door Courtesy Switch)

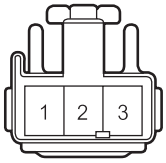


H B137940E01

(a) Disconnect the ECU connector.
(b) Measure the resistance according to the value(s) in the table below.

**Standard resistance**

| Tester Connection (Symbols) | Condition | Specified Condition |
|---|---|---|
| S5-3 - E6-25 (LGCY) | Always | Below 1 Ω |
| S5-3 - Body ground | Always | 10 kΩ or higher |
| S5-2 - Body ground | Always | Below 1 Ω |

**NG** → **REPAIR OR REPLACE HARNESS OR CONNECTOR**

**OK**

**PROCEED TO NEXT CIRCUIT INSPECTION SHOWN IN PROBLEM SYMPTOMS TABLE**

# Luggage Compartment Door Lock Circuit

## DESCRIPTION

The luggage compartment door lock motor is built into the luggage compartment door lock assembly. The main body ECU receives a luggage compartment door unlock signal from the luggage compartment door lock cylinder or electrical key switch (w/ smart key system) and operates the door lock motor.

## WIRING DIAGRAM

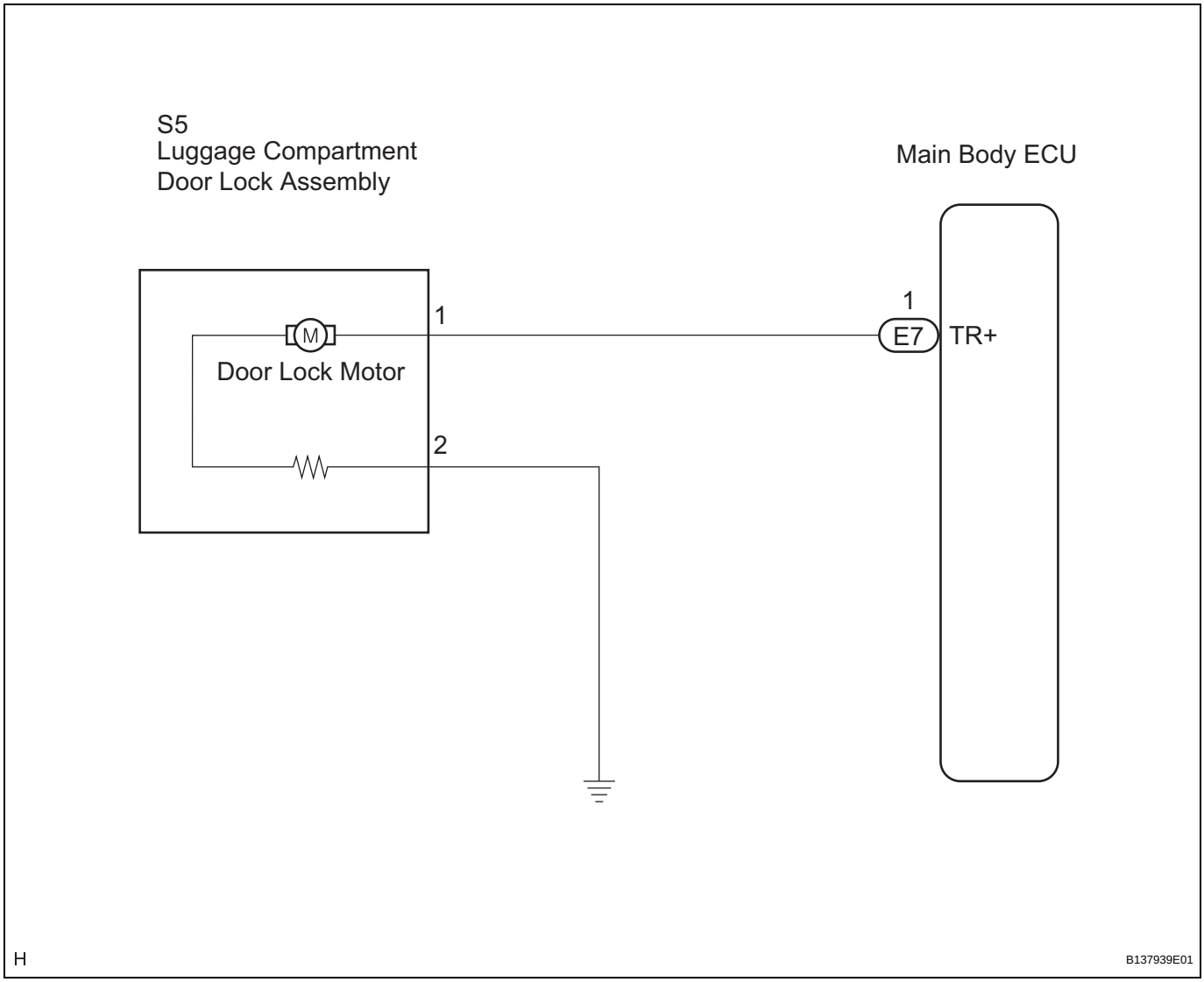


DL

## INSPECTION PROCEDURE

| 1 | PERFORM ACTIVE TEST (LUGGAGE COMPARTMENT DOOR) |
|---|---|

(a) Select the ACTIVE TEST, use the intelligent tester to generate a control command, and then check that the door lock operates.

**MAIN BODY:**

| Item | Test Details | Diagnostic Note |
|---|---|---|
| TRUNK/BDOR OPEN | Operate luggage compartment door lock motor LOCK/UNLOCK | - |

**OK:**
**Door lock is locked/unlocked.**

**NG** → **Go to step 2**

**OK**

**PROCEED TO NEXT CIRCUIT INSPECTION SHOWN IN PROBLEM SYMPTOMS TABLE**

## 2 INSPECT LUGGAGE COMPARTMENT DOOR LOCK ASSEMBLY (DOOR LOCK MOTOR)

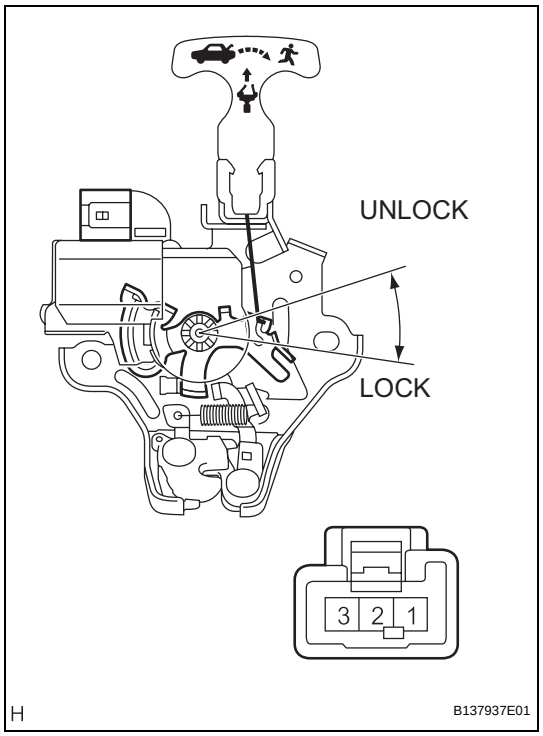


(a) Remove the luggage compartment door lock assembly.
(b) Apply battery voltage and check operation of the door lock motor.
**Standard voltage**

| Measurement Condition | Specified Condition |
|---|---|
| Battery positive (+) → Terminal 1<br>Battery negative (-) → Terminal 2 | Unlock |

**NG** → **REPLACE LUGGAGE COMPARTMENT DOOR LOCK ASSEMBLY**

**OK**

## 3 CHECK WIRE HARNESS (LUGGAGE COMPARTMENT DOOR LOCK - MAIN BODY ECU)

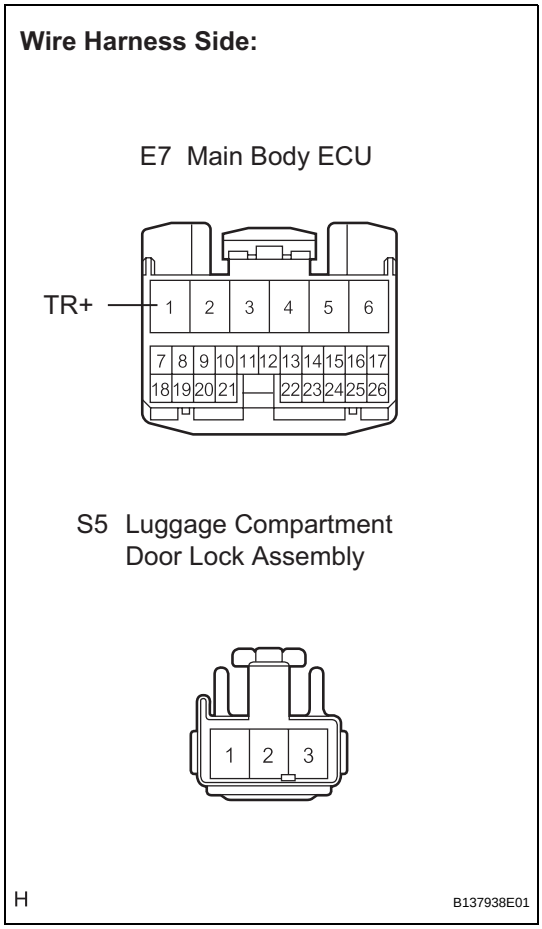


(a) Disconnect the ECU connector.
(b) Measure the resistance according to the value(s) in the table below.

**Standard resistance**

| Tester Connection (Symbols) | Condition | Specified Condition |
|---|---|---|
| E7-1 (TR+) - S5-1 | Always | Below 1 Ω |
| S5-1 - Body ground | Always | 10 kΩ or higher |
| S5-2 - Body ground | Always | Below 1 Ω |

**NG** → **REPAIR OR REPLACE HARNESS OR CONNECTOR**

**OK**

**PROCEED TO NEXT CIRCUIT INSPECTION SHOWN IN PROBLEM SYMPTOMS TABLE**

# Luggage Compartment Door Key Cylinder Switch Circuit

## DESCRIPTION

When the luggage compartment door lock cylinder is turned to unlock the door by key, there is continuity between terminal TSW of the main body ECU and body ground.

## WIRING DIAGRAM

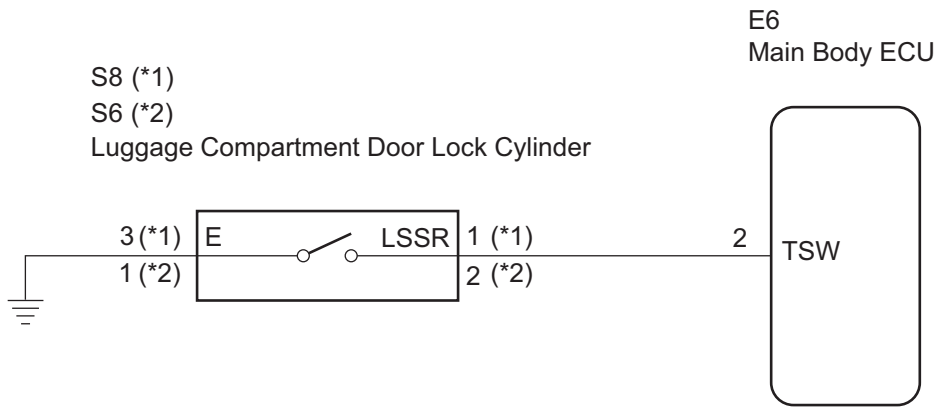


*1: w/ Smart Key System

*2: w/o Smart Key System

H

B109777E25

## INSPECTION PROCEDURE

| 1 | READ VALUE OF INTELLIGENT TESTER |
|---|---|

(a) Connect the intelligent tester to the DLC3.
(b) Turn the ignition switch on (IG) and turn the intelligent tester main switch on.
(c) Select the item below in the "DATA LIST" and read the display on the intelligent tester.

**MAIN BODY:**

| Item | Measurement Item/Display (Range) | Normal Condition | Diagnostic Note |
|---|---|---|---|
| TRUNK KEY UNLK | Luggage compartment door key cylinder switch/ON or OFF | ON: Ignition key inserted and turned to lock position<br>OFF: Ignition key inserted and turned to unlock position | - |

**OK:**

**When the ignition switch is operated, the display changes as shown above.**

**NG** → **Go to step 2**

DL

**OK**

**PROCEED TO NEXT CIRCUIT INSPECTION SHOWN IN PROBLEM SYMPTOMS TABLE**

## 2 INSPECT MAIN BODY ECU (TSW TERMINAL)

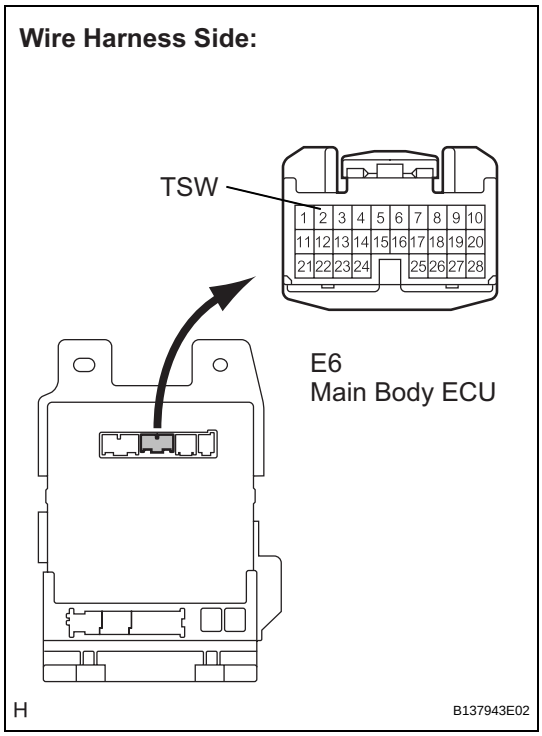


(a) Turn the ignition switch off.
(b) Disconnect the ECU connector.
(c) Measure the resistance according to the value(s) in the table below.

**Standard resistance**

| Tester Connection (Symbols) | Condition | Specified Condition |
|---|---|---|
| E6-2 (TSW) - Body ground | Luggage compartment door lock cylinder LOCK | 10 kΩ or higher |
| E6-2 (TSW) - Body ground | Luggage compartment door lock cylinder OPEN | Below 1 Ω |
| E6-2 (TSW) - Body ground | Luggage compartment door lock cylinder UNLOCK | 10 kΩ or higher |

**NG** → **Go to step 3**

**OK**

**PROCEED TO NEXT CIRCUIT INSPECTION SHOWN IN PROBLEM SYMPTOMS TABLE**

| 3 | **INSPECT LUGGAGE COMPARTMENT DOOR LOCK CYLINDER** |
|---|---|

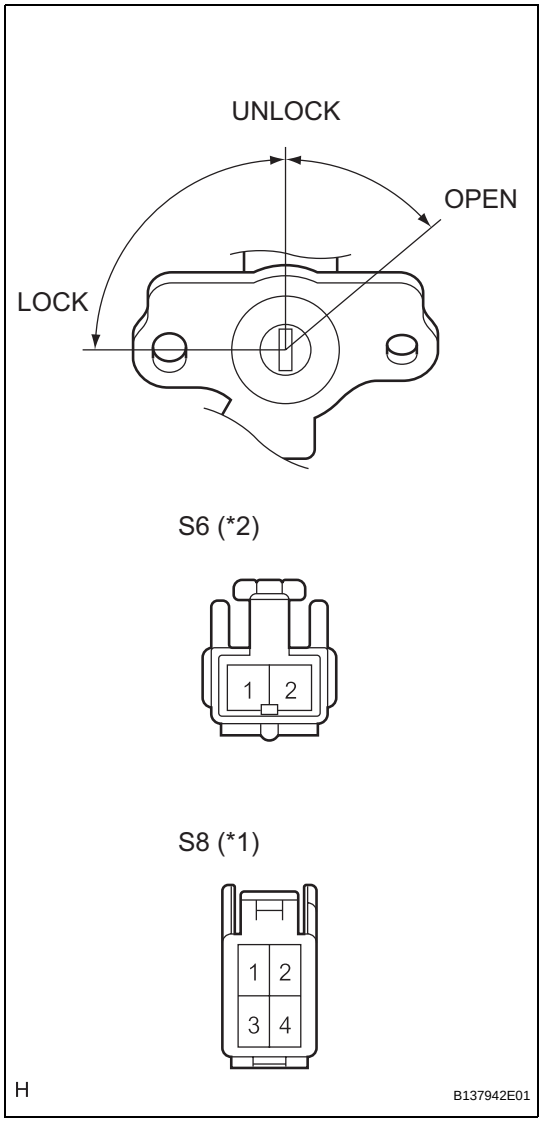


(a) Disconnect the luggage compartment door lock cylinder connector.

(b) Measure the resistance according to the value(s) in the table below.

**Standard resistance**

| Tester Connection (Symbols) | Condition | Specified Condition |
|---|---|---|
| *1 S8-1 - S8-3 | Luggage compartment door lock cylinder LOCK | 10 kΩ or higher |
| *1 S8-1 - S8-3 | Luggage compartment door lock cylinder OPEN | Below 1 Ω |
| *1 S8-1 - S8-3 | Luggage compartment door lock cylinder UNLOCK | 10 kΩ or higher |
| *2 S6-2 - S6-1 | Luggage compartment door lock cylinder LOCK | 10 kΩ or higher |
| *2 S6-2 - S6-1 | Luggage compartment door lock cylinder OPEN | Below 1 Ω |
| *2 S6-2 - S6-1 | Luggage compartment door lock cylinder UNLOCK | 10 kΩ or higher |

*1: w/ SMART KEY SYSTEM
*2: w/o SMART KEY SYSTEM

**NG** → **REPLACE LUGGAGE COMPARTMENT DOOR LOCK CYLINDER**

**OK**

**REPAIR OR REPLACE HARNESS OR CONNECTOR (MAIN BODY ECU, BODY GROUND - DOOR LOCK CYLINDER)**

# Door Key Lock / Unlock Switch Circuit

## DESCRIPTION

The door lock and unlock switch is built into the door lock assembly.
This switch is ON when the door key is in the unlock position and OFF when the door key is in the lock position. It is used as one of the operating conditions for the key confinement prevention function.

## WIRING DIAGRAM

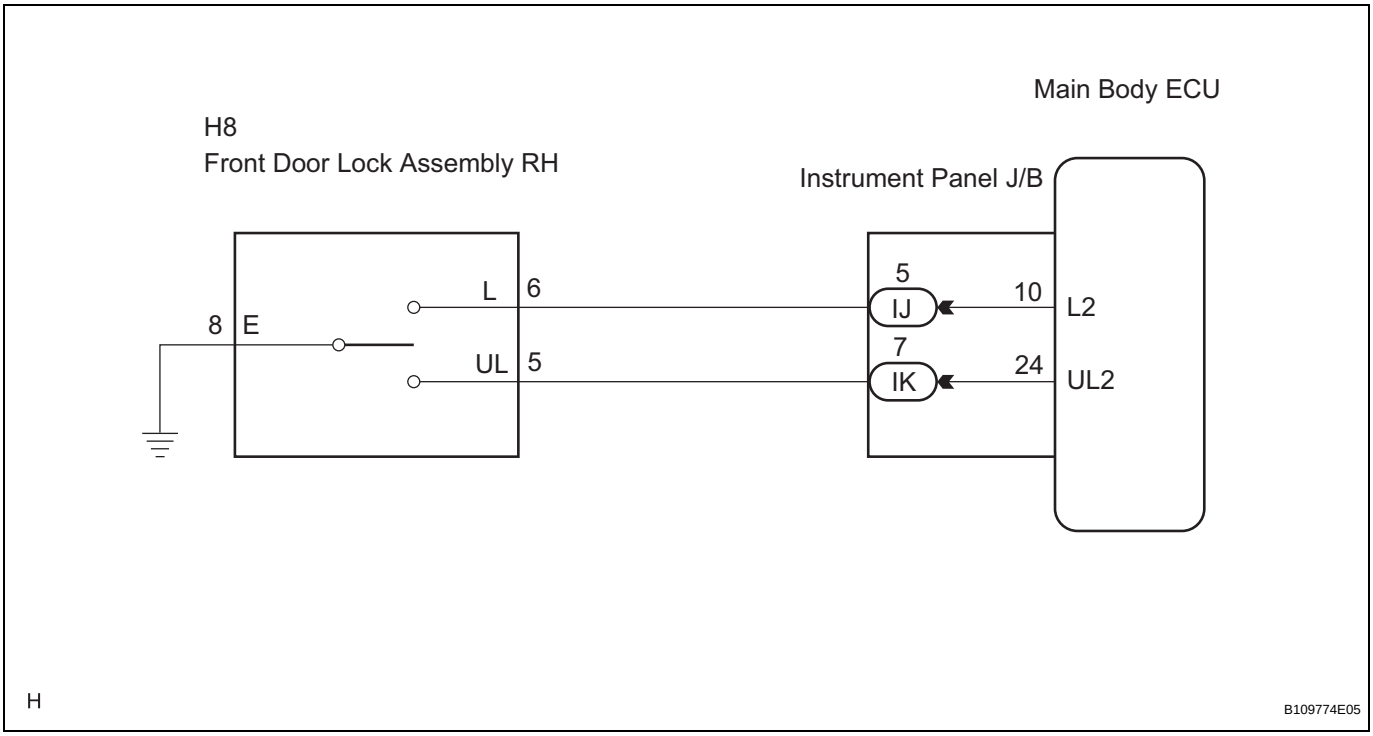

## INSPECTION PROCEDURE

| 1 | **INSPECT FRONT DOOR LOCK ASSEMBLY RH (DOOR KEY LOCK AND UNLOCK SWITCH)** |
|---|---|

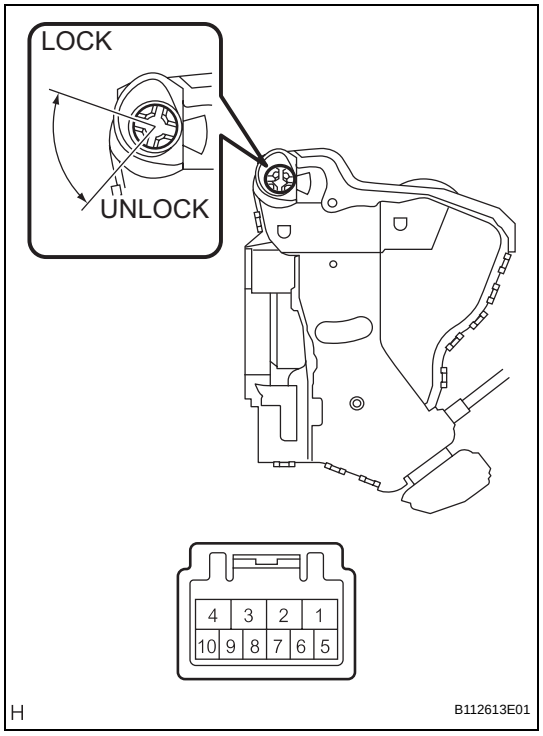


(a) Remove the front door lock assembly RH.
(b) Measure the resistance according to the value(s) in the table below.
**Standard resistance**

| Tester Connection | Condition | Specified Condition |
|---|---|---|
| 5 - 8 | ON (Door lock set to UNLOCK) | Below 1 Ω |
| 5 - 8<br>6 - 8 | OFF (Free) | 10 kΩ or higher |
| 6 - 8 | ON (Door lock set to LOCK) | Below 1 Ω |

**NG** → **REPLACE FRONT DOOR LOCK ASSEMBLY LH**

**OK**

| 2 | **CHECK WIRE HARNESS (FRONT DOOR LOCK RH - MAIN BODY ECU (INSTRUMENT PANEL J/B))** |
|---|---|

(a) Disconnect the IJ J/B connector.

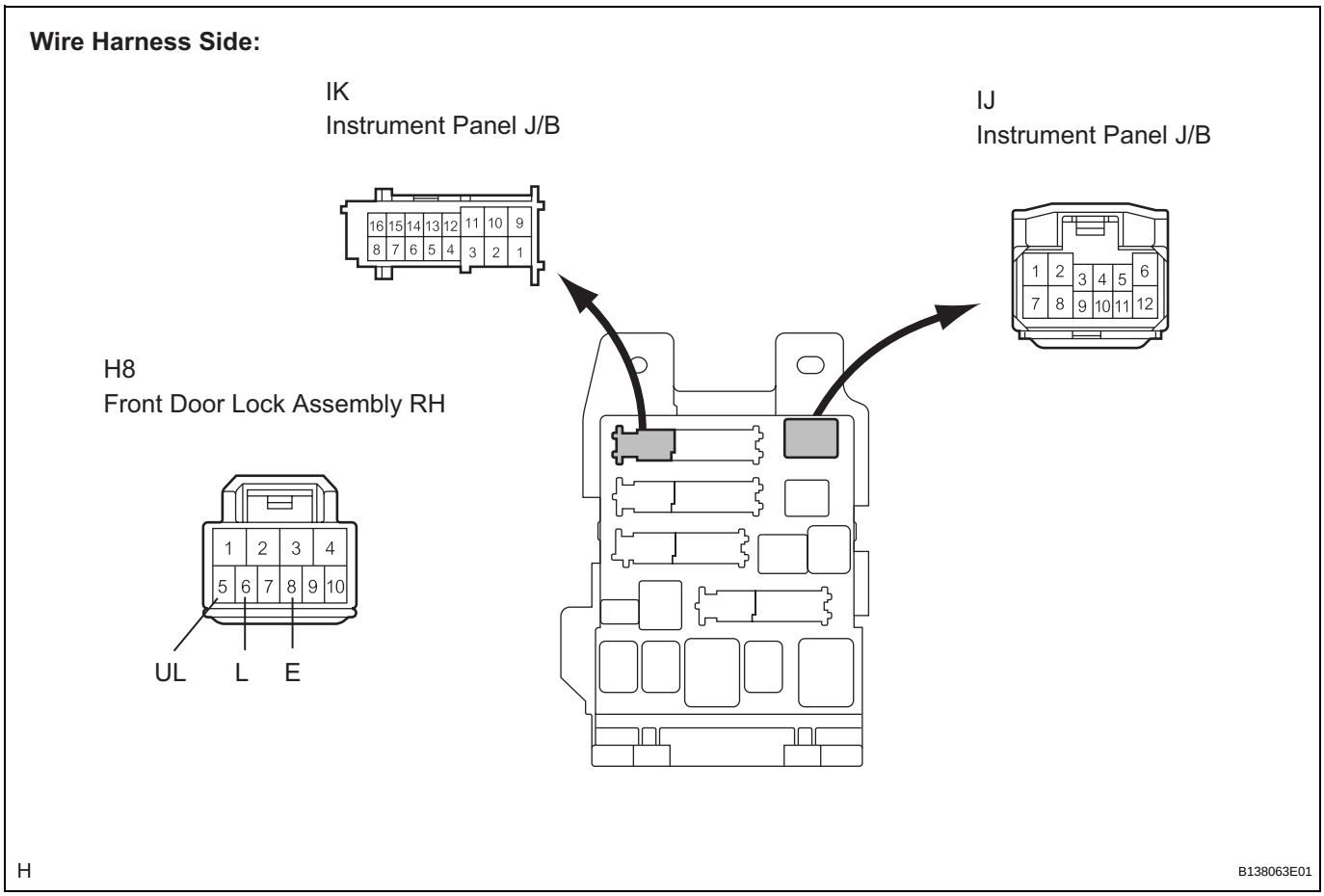


(b) Measure the resistance according to the value(s) in the table below.

**Standard resistance**

| Tester Connection (Symbols) | Condition | Specified Condition |
|---|---|---|
| H8-6 (L) - IJ-5 | Always | Below 1 Ω |
| H8-5 (UL) - IK-7 | Always | Below 1 Ω |
| H8-8 (E) - Body ground | Always | Below 1 Ω |
| H8-6 (L) - Body ground | Always | 10 kΩ or higher |
| H8-5 (UL) - Body ground | Always | 10 kΩ or higher |

**NG** → **REPAIR OR REPLACE HARNESS OR CONNECTOR**

DL

**OK**

**PROCEED TO NEXT CIRCUIT INSPECTION SHOWN IN PROBLEM SYMPTOMS TABLE**

# Driver Side Door Key Lock and Unlock Switch Circuit

## DESCRIPTION

The driver's door key lock and unlock switch is built into the driver's door lock assembly.
When the driver's door key cylinder is turned to lock all the doors by key, there is continuity between terminals L and E of the key lock and unlock switch. When the cylinder is turned to unlock the door(s), there is continuity between terminals UL and E.
Terminals L2 and UL3 of the main body ECU are connected to the door lock assembly, and door lock/unlock request signals (by key) are input to the main body ECU.
The main body ECU constantly applies voltage to terminal L of the driver's door lock assembly via terminal L2. When the driver's door key cylinder is turned to lock all the doors by key, current flows from terminal L2 to terminal L.
The main body ECU also applies constant voltage to terminal UL of the door lock assembly via terminal UL3. When the door key cylinder is turned in the direction to unlock the door(s) by key, current flows from terminal UL3 to terminal UL.

## WIRING DIAGRAM

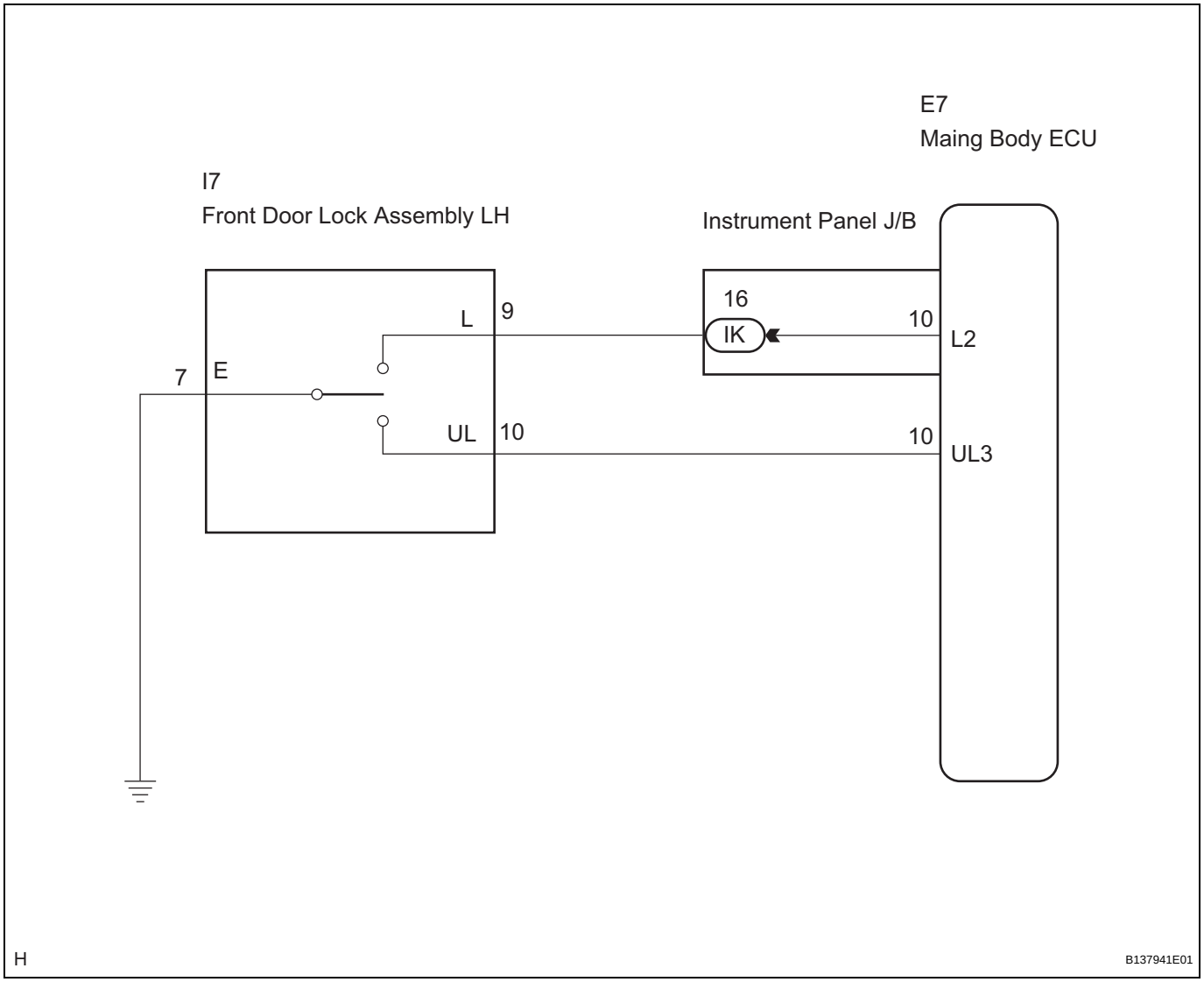


DL

## INSPECTION PROCEDURE

| 1 | READ VALUE OF DATA LIST |
|---|---|

(a) Check the DATA LIST to ensure proper function of the door unlock detection switch.

**MAIN BODY:**

| Item | Measurement Item / Display (Range) | Normal Condition | Diagnostic Note |
|---|---|---|---|
| DOR KEY SW-LOCK | Driver door lock/unlock switch lock signal (key-linked lock switch) /ON or OFF | ON: Driver side door key cylinder is turned to LOCK<br>OFF: Driver side door key cylinder is not turned to LOCK | - |
| DOR KEY SW-ULCK | Driver door lock/unlock switch unlock signal (key-linked unlock switch) /ON or OFF | ON: Driver side door key cylinder is turned to UNLOCK<br>OFF: Driver side door key cylinder is not turned to UNLOCK | - |

**OK:**
**The display is as specified in the normal condition column.**

**NG** → **Go to step 2**

**OK**

**PROCEED TO NEXT CIRCUIT INSPECTION SHOWN IN PROBLEM SYMPTOMS TABLE**

| 2 | INSPECT FRONT DOOR LOCK ASSEMBLY (DOOR KEY LOCK AND UNLOCK SWITCH) |
|---|---|

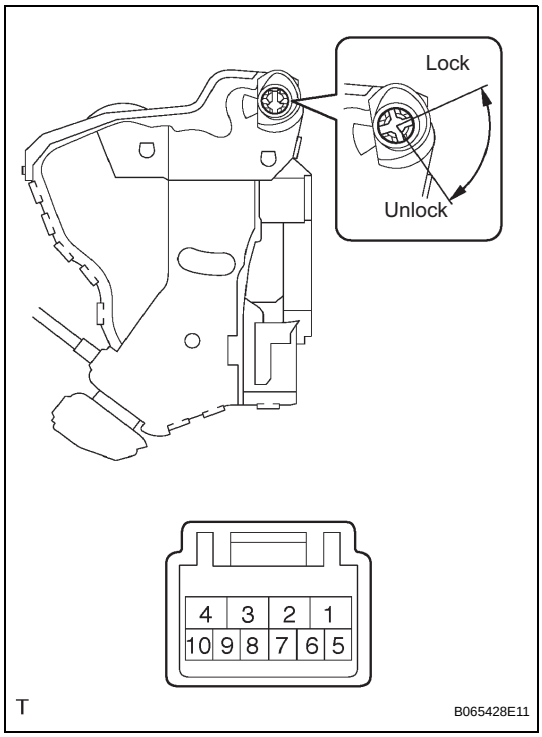


(a) Remove the front door lock assembly LH.
(b) Measure the resistance according to the value(s) in the table below.
**Standard resistance**

| Tester Connection | Condition | Specified Condition |
|---|---|---|
| 7 - 9 | ON (Door lock set to LOCK) | Below 1 Ω |
| 7 - 9<br>7 - 10 | OFF (Free) | 10 kΩ or higher |
| 7 - 10 | ON (Door lock set to UNLOCK) | Below 1 Ω |

**NG** → **REPLACE FRONT DOOR LOCK ASSEMBLY**

**OK**

DL

| 3 | CHECK WIRE HARNESS (FRONT DOOR LOCK ASSEMBLY - MAIN BODY ECU) |
|---|---|

(a) Disconnect the front door lock assembly LH connector.

**Wire Harness Side:**

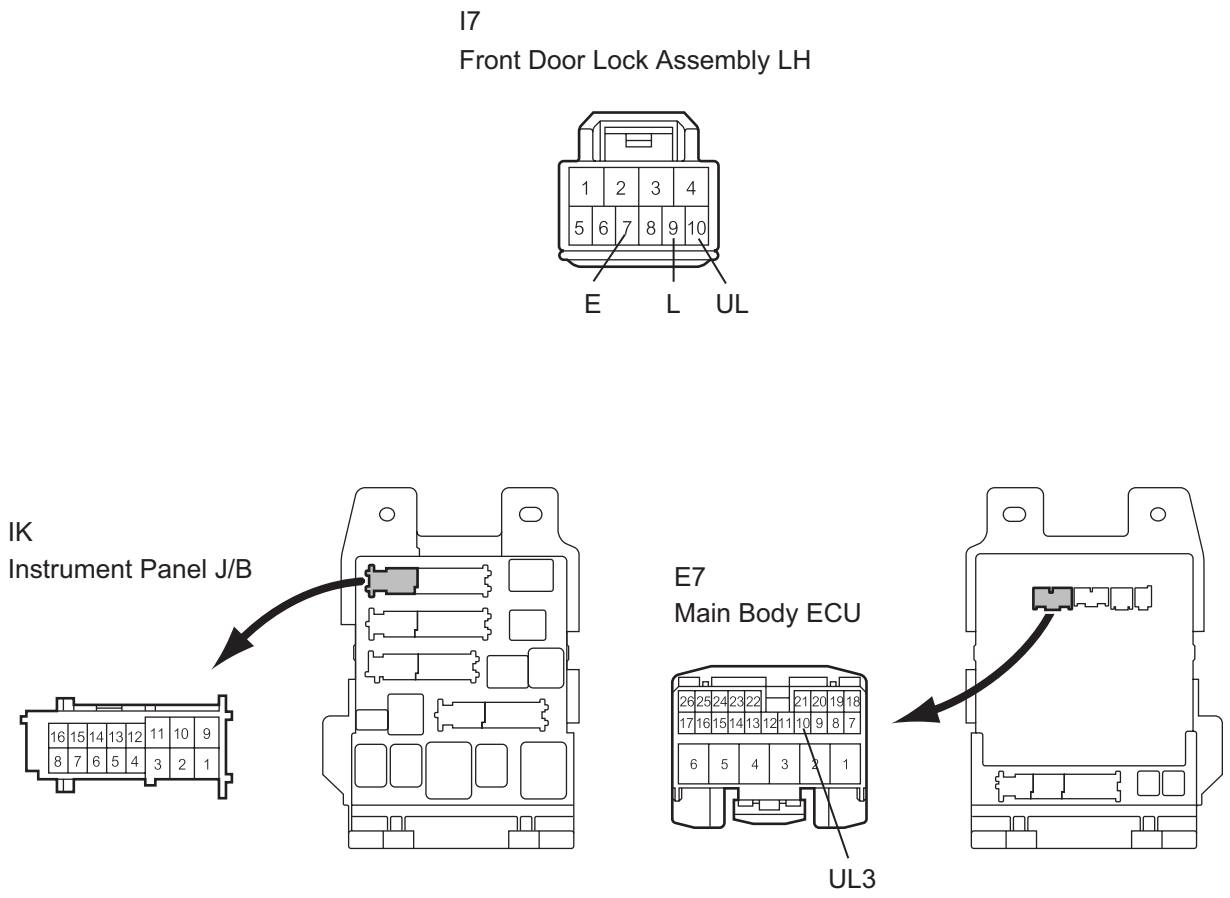


H B112609E02

(b) Disconnect the main body ECU connector.

(c) Measure the resistance according to the value(s) in the table below.

**Standard resistance**

| Tester Connection (Symbols) | Condition | Specified Condition |
|---|---|---|
| I7-9 (L) - IK-16 | Always | Below 1 Ω |
| I7-10 (UL) - E7-10 (UL3) | Always | Below 1 Ω |
| I7-7 (E) - Body ground | Always | Below 1 Ω |
| I7-9 (L) - Body ground | Always | 10 kΩ or higher |
| I7-10 (UL) - Body ground | Always | 10 kΩ or higher |

**NG** → **REPAIR OR REPLACE HARNESS OR CONNECTOR**

DL

**OK**

**REPLACE MAIN BODY ECU**

# Door Control Switch Circuit

## DESCRIPTION

When the lock side of the door control switch is pressed, continuity is established between terminal 2 (driver side) or 4 (passenger side) and terminal 1 (driver side) or 3 (passenger side) of the switch. When the unlock side of the switch is pressed, continuity is established between terminal 9 (driver side) or 2 (passenger side) and terminal 1 (driver side) or 3 (passenger side).
Terminals L1 and UL1 of the main body ECU are connected to the door control switch and door lock/unlock request signals (by door control switch operation) are input to the ECU.
The main body ECU constantly applies voltage to terminal 2 (driver side) or 4 (passenger side) of the door control switch via terminal L1. When the door control switch is operated to lock all doors, current flows from terminal L1 to terminal 2 (driver side) or 4 (passenger side). The main body ECU determines that this is door lock request signal input.
The main body ECU also applies constant voltage to terminal 9 (driver side) or 2 (passenger side) of the door control switch via terminal UL1. When the door control switch is operated to unlock the doors, current flows from terminal UL1 to terminal 9 (driver side) or 2 (passenger side). The main body ECU determines that this is door unlock request signal input.

## WIRING DIAGRAM

**DRIVER SIDE:**

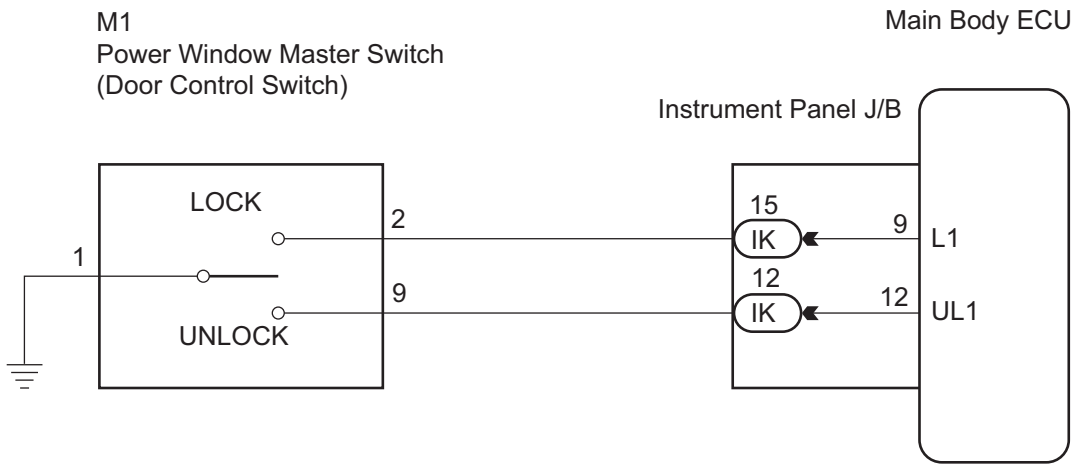


H

B109774E06

DL

**PASSENGER SIDE:**

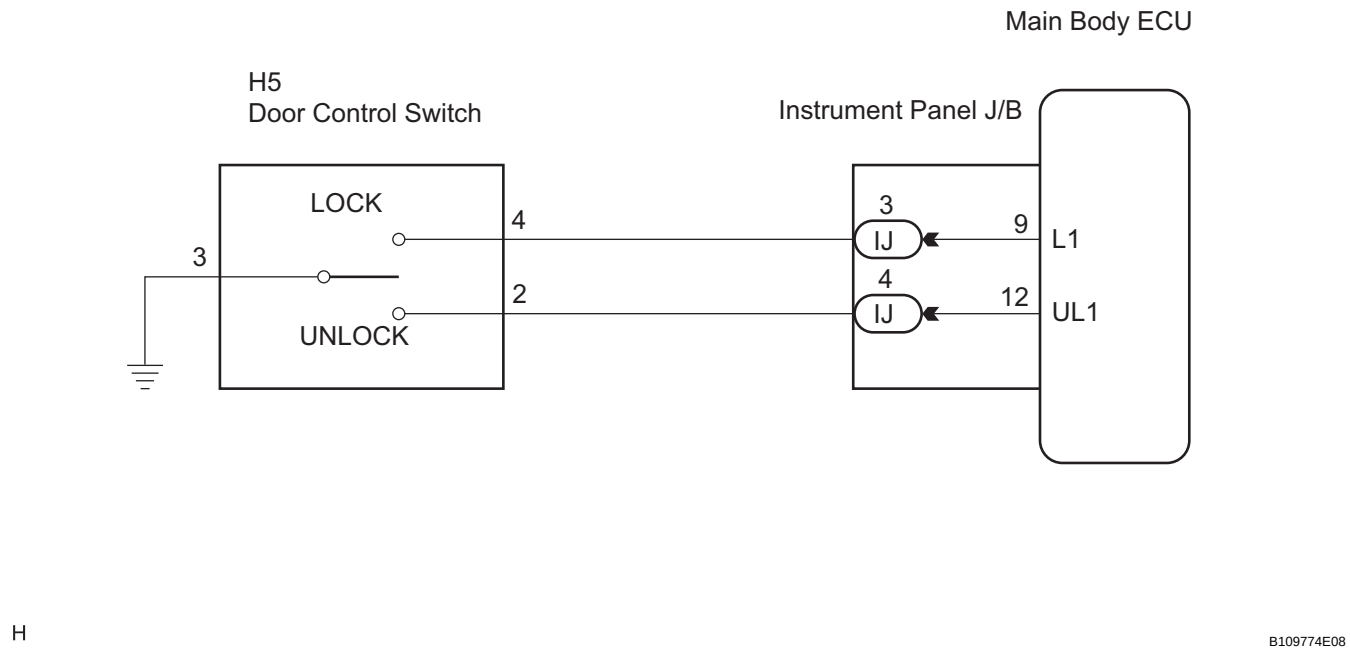


## INSPECTION PROCEDURE

| 1 | INSPECT DOOR CONTROL SWITCH ASSEMBLY |
|---|---|

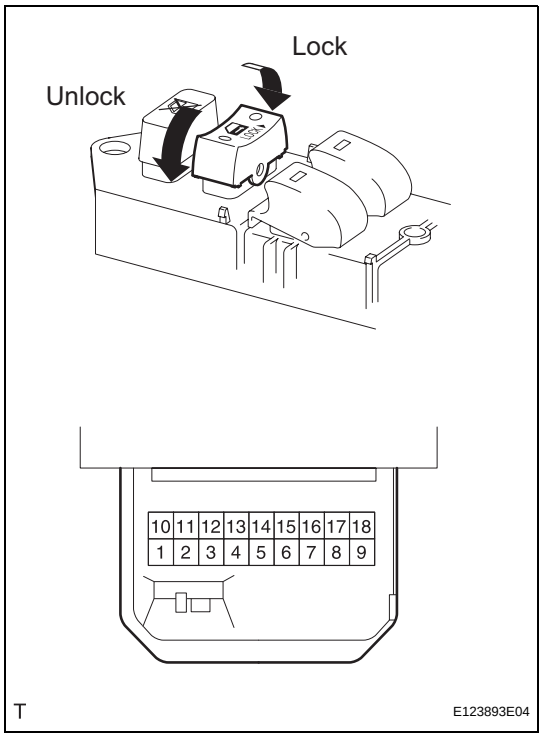


(a) Inspect driver side.
  (1) Remove the master switch.
  (2) Measure the resistance of the door control switch.
  **Standard resistance**

| Tester Connection | Switch Condition | Specified Condition |
|---|---|---|
| 2 - 1 | Lock | Below 1 Ω |
| 2 - 1 | OFF (Free) | 10 kΩ or higher |
| 9 - 1 | Unlock | Below 1 Ω |
| 9 - 1 | OFF (Free) | 10 kΩ or higher |

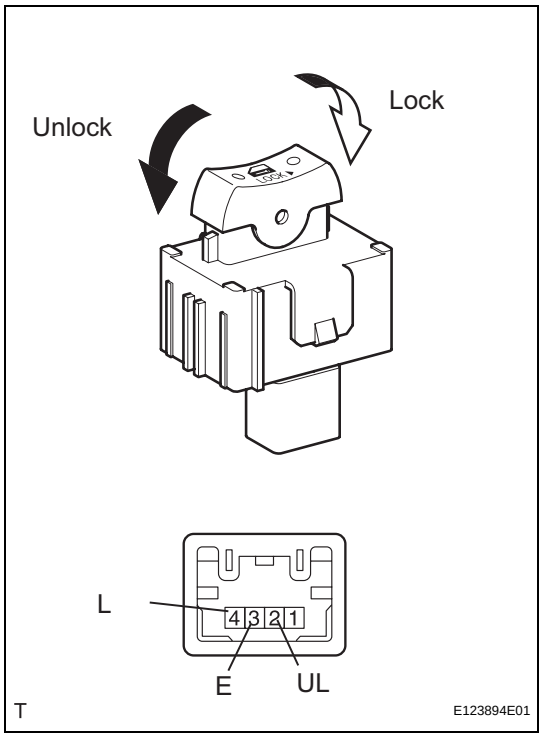


(b) Inspect passenger side.
  (1) Remove the door control switch assembly.
  (2) Measure the resistance according to the value(s) in the table below.
  **Standard resistance**

| Tester Connection | Switch Condition | Specified Condition |
|---|---|---|
| 4 - 3 | Lock | Below 1 Ω |
| 4 - 3<br>2 - 3 | OFF (Free) | 10 kΩ or higher |
| 2 - 3 | Unlock | Below 1 Ω |

**NG** → **REPLACE DOOR CONTROL SWITCH OR MASTER SWITCH**

**OK**

| | |
|---|---|
| **2** | **CHECK WIRE HARNESS (DOOR CONTROL SWITCH - MAIN BODY ECU (INSTRUMENT PANEL J/B))** |

(a) Disconnect the door control switch connector.

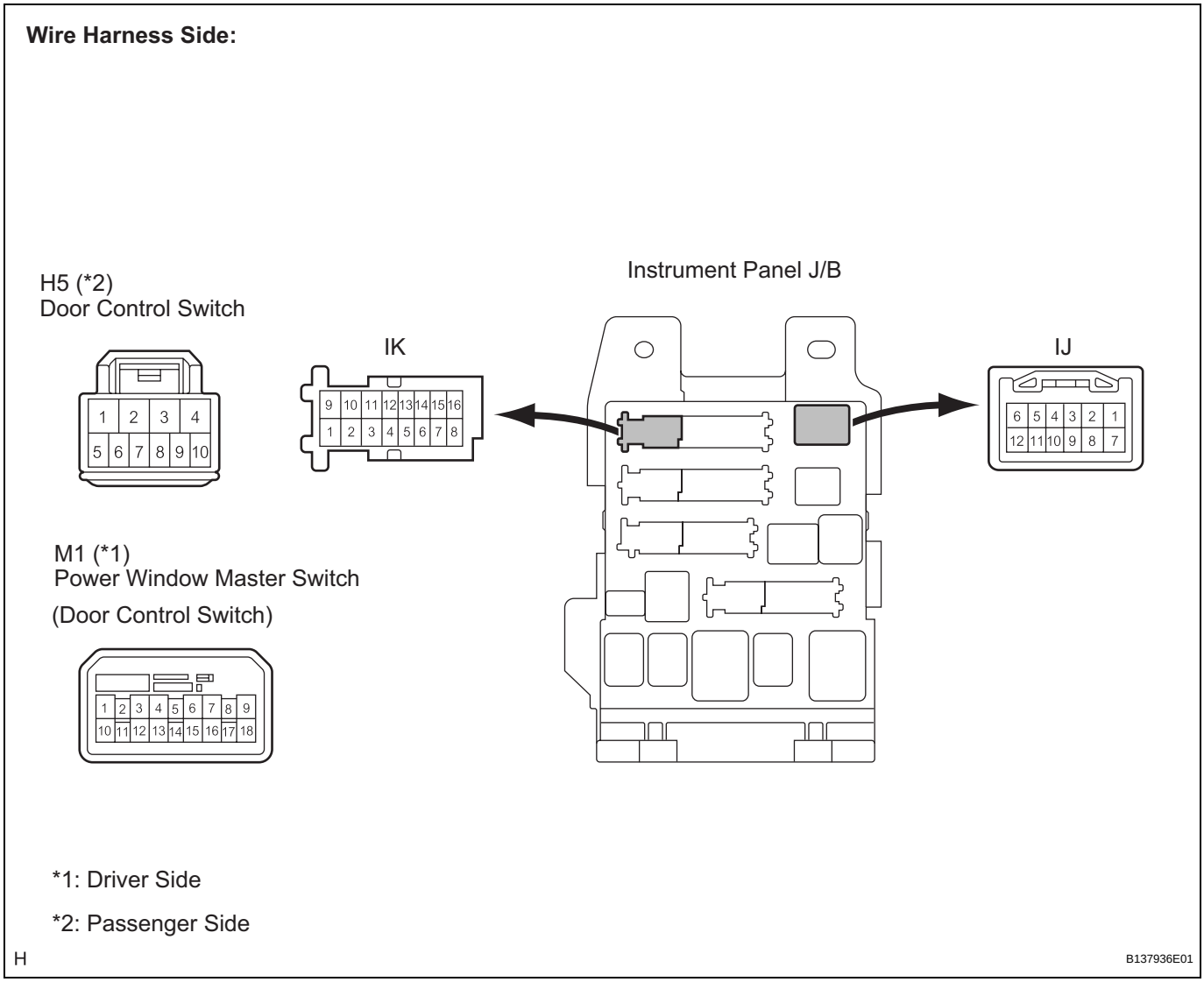


(b) Disconnect the ECU (instrument panel J/B) connector.

(c) Measure the resistance according to the value(s) in the table below.

**Standard resistance**

| Tester Connection | Condition | Specified Condition |
|---|---|---|
| *1 M1-2 - IK-15 | Always | Below 1 Ω |
| *1 M1-9 - IK-12 | Always | Below 1 Ω |
| *1 M1-1 - Body ground | Always | Below 1 Ω |
| *1 IK-15 - Body ground | Always | 10 kΩ or higher |
| *1 IK-12 - Body ground | Always | 10 kΩ or higher |
| *2 H5-4 - IJ-3 | Always | Below 1 Ω |
| *2 H5-2 - IJ-4 | Always | Below 1 Ω |
| *2 H5-3 - Body ground | Always | Below 1 Ω |
| *2 IJ-3 - Body ground | Always | 10 kΩ or higher |
| *2 IJ-4 - Body ground | Always | 10 kΩ or higher |

*1: Driver Side
*2: Passenger Side

**NG** → **REPAIR OR REPLACE HARNESS OR CONNECTOR**

**OK**

**PROCEED TO NEXT CIRCUIT INSPECTION SHOWN IN PROBLEM SYMPTOMS TABLE**

# WIRELESS DOOR LOCK CONTROL SYSTEM (w/ Smart Key System)

## PARTS LOCATION

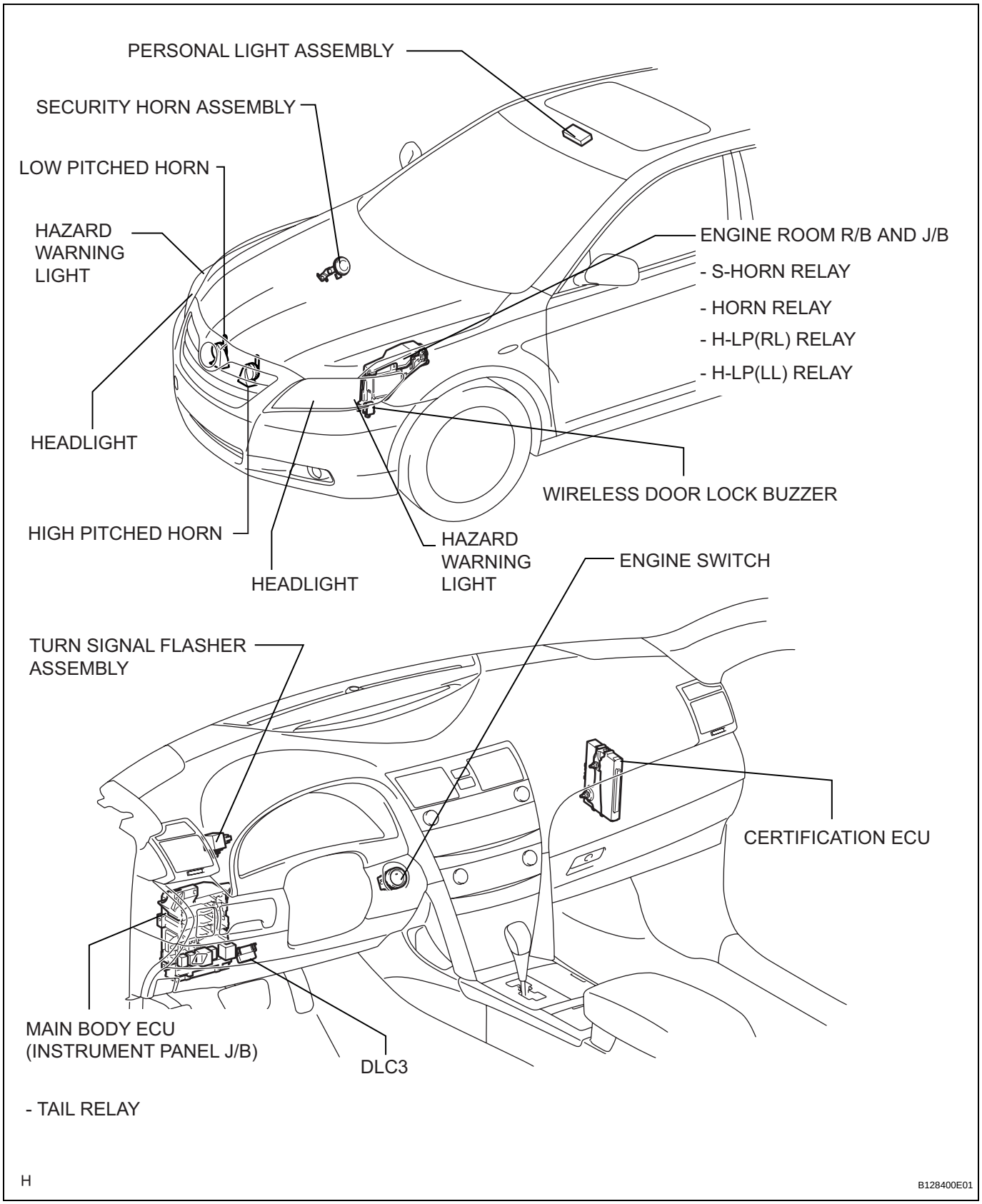


DL

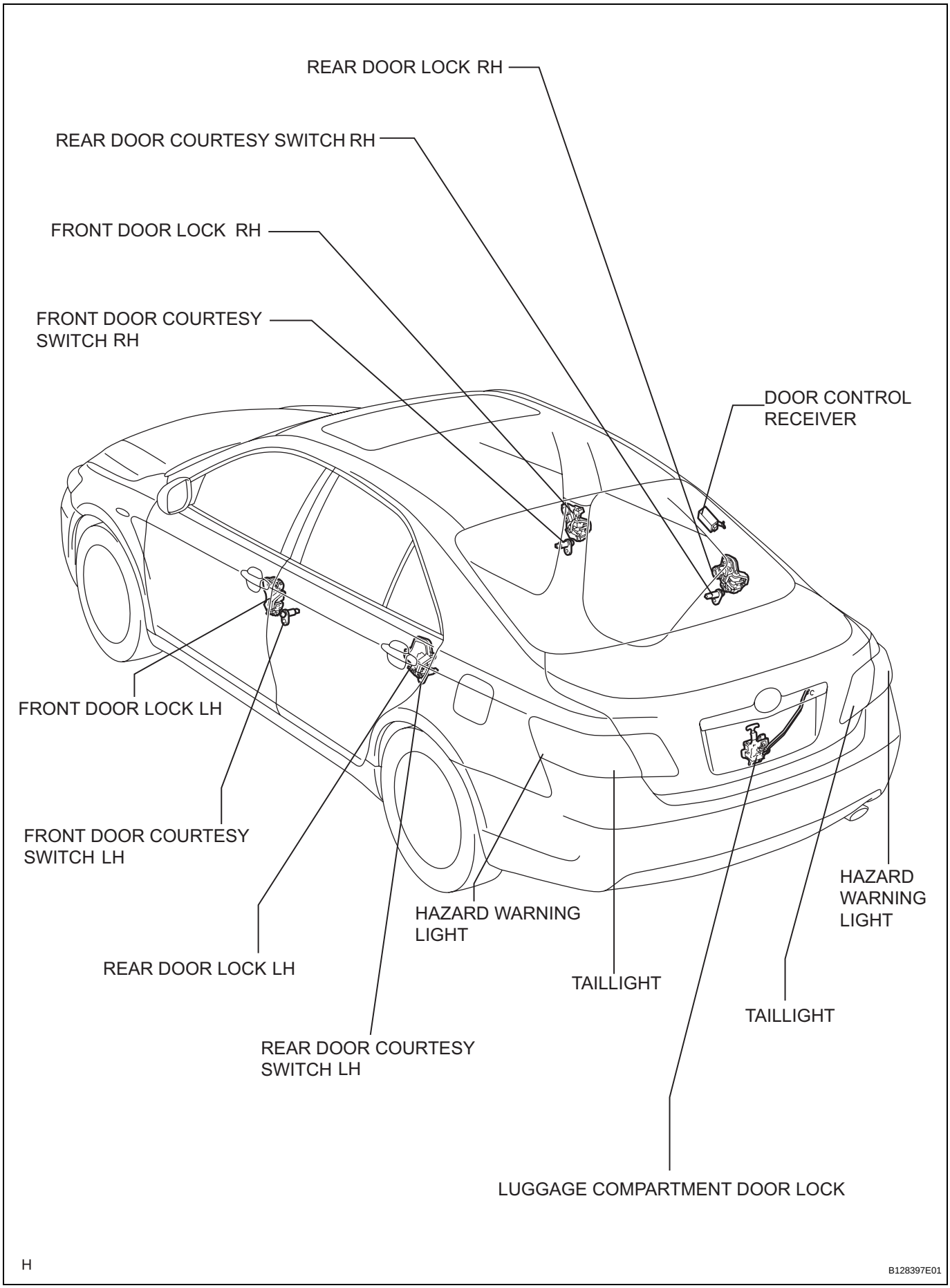
REAR DOOR LOCK RH
REAR DOOR COURTESY SWITCH RH
FRONT DOOR LOCK RH
FRONT DOOR COURTESY SWITCH RH
DOOR CONTROL RECEIVER
FRONT DOOR LOCK LH
FRONT DOOR COURTESY SWITCH LH
HAZARD WARNING LIGHT
HAZARD WARNING LIGHT
REAR DOOR LOCK LH
TAILLIGHT
TAILLIGHT
REAR DOOR COURTESY SWITCH LH
LUGGAGE COMPARTMENT DOOR LOCK
H
B128397E01

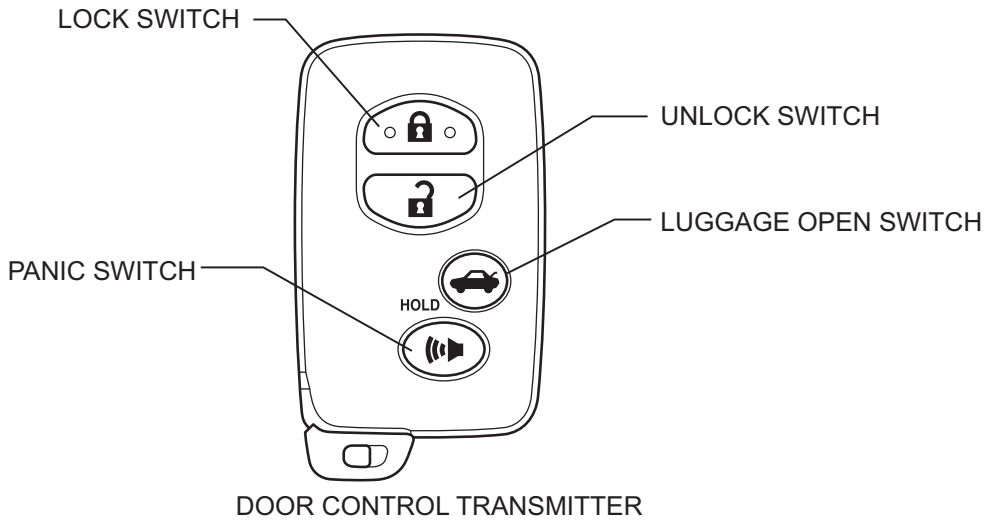


H

B128402E01

# SYSTEM DIAGRAM

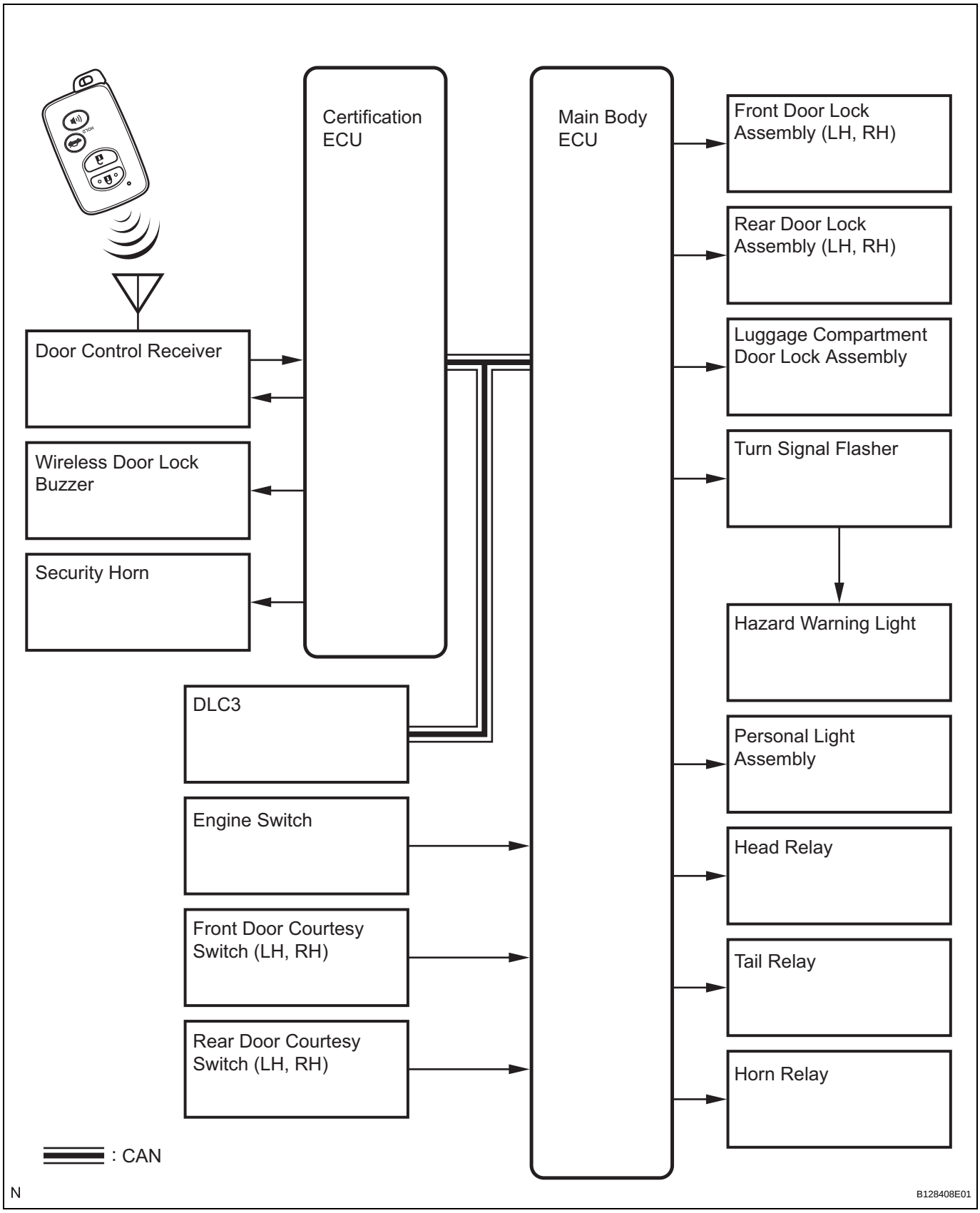


| Transmitting ECU (Transmitter) | Receiving ECU (Receiver) | Signal | Line |
|---|---|---|---|
| Certification ECU | Main body ECU | Wireless door lock signal | CAN |

# SYSTEM DESCRIPTION

## 1. WIRELESS DOOR LOCK CONTROL SYSTEM

The wireless door lock control system functions to lock and unlock all the doors from a distance. The system is controlled by a hand-held transmitter which sends radio waves to the door control receiver. The certification ECU performs an ID code identification process and engages the door lock control.

## 2. FUNCTION OF MAIN COMPONENTS

| Component | Function |
|---|---|
| Door control transmitter | • Has LOCK, UNLOCK, LUGGAGE OPEN, and PANIC switches.<br>• Transmits weak radio waves (recognition codes and function codes) to the door control receiver. |
| Door control receiver | Receives weak radio waves from the door control transmitter and sends them to the certification ECU. |
| • Front door courtesy light switch<br>• Rear door courtesy light switch<br>• Luggage compartment door courtesy light switch | Turns on when a door is opened and turns off when it is closed. Outputs door status codes (open or closed) to the main body ECU. |
| Door lock position switch | Transmits the door lock positions of each door to the main body ECU. |
| Wireless door lock buzzer | Emits beep (answer back) when doors are locked or unlocked, or luggage compartment door is opened by wireless operation. |
| Certification ECU | Sends wireless door lock control signals in response to the code data from the door control receiver and signals from each ECU. |

## 3. SYSTEM FUNCTION

The door control transmitter has the LOCK, UNLOCK, LUGGAGE OPEN, and PANIC switches. Operating these switches activates each function.

The wireless door lock control system has the following functions:

HINT:

The default settings of the following functions are ON. Part of these functions can be customized (See page DL-73).

| Function | Operation |
|---|---|
| All door lock | Pressing the LOCK switch locks all doors. |
| All door unlock<br>(2-step unlock) | Pressing the UNLOCK switch twice within 3 seconds unlocks all the doors after the driver's door is unlocked. |
| Automatic lock | If none of the doors is opened within 60 seconds after they are unlocked by the wireless door lock control, all the doors will lock again automatically. |
| Luggage compartment door open | Pressing the LUGGAGE OPEN switch of the transmitter opens the luggage compartment door. |
| Answer back | • When the doors are locked by wireless operation, the hazard warning lights flash once and the wireless door lock buzzer sounds once.<br>• When the doors are unlocked by wireless operation, the hazard warning lights flash twice and the wireless door lock buzzer sounds twice.<br>• When the luggage compartment door is opened by wireless operation, the wireless door lock buzzer sounds. |
| Panic alarm | Pressing the PANIC switch of the transmitter for longer than about 0.8 seconds causes the following alarms to activate:<br>• Sounds the horn and security horn.<br>• Flashes the hazard lights, headlights, and taillights.<br>• Illuminates the front interior light (when the switch is in the DOOR position).<br>While the panic alarm is operating, pressing any switch of the transmitter cancels the alarm operation. |

| Function | Operation |
|---|---|
| Door ajar warning | The buzzer sounds when LOCK is pressed when any of the doors are ajar. When all the doors are closed or when UNLOCK is pressed, the buzzer will stop after it sounds for 10 seconds continuously. |
| Illuminated Entry | When all the doors are locked, pressing the UNLOCK switch causes the interior light to come on simultaneously with the unlock operation. |

# HOW TO PROCEED WITH TROUBLESHOOTING

HINT:
The wireless door lock control system troubleshooting procedures are based on the premise that the power door lock control system is operating normally. Check the power door lock control system first before troubleshooting the wireless door lock control system.
Use this procedure to troubleshoot the wireless door lock control system.

| 1 | VEHICLE BROUGHT TO WORKSHOP |
|---|---|

NEXT

| 2 | CUSTOMER PROBLEM ANALYSIS |
|---|---|

(a) Interview the customer to confirm the trouble (See page IN-45).

NEXT

| 3 | INSPECT COMMUNICATION FUNCTION OF CAN COMMUNICATION SYSTEM |
|---|---|

(a) Use the intelligent tester to check for normal function of the multiplex communication system.
  (1) (ECU unconnected, communication line malfunctioning) If no code is output, proceed to A.
  (2) (ECU unconnected, communication line malfunctioning) If any code is output, proceed to B.

B → **Go To CAN COMMUNICATION SECTION**

A

| 4 | DTC CHECK |
|---|---|

(a) Check for a DTC and note any codes that are output.
(b) Delete the DTC.
(c) Recheck for DTCs. Try to prompt the DTC by simulating the original symptom that the DTC suggests.
  (1) If the DTC does not reoccur, proceed to A.
  (2) If the DTC reoccurs, proceed to B.

B → **Go To DTC chart**

A

| 5 | SYMPTOM SIMULATION |
|---|---|

NEXT

| 6 | PROBLEM SYMPTOMS TABLE |
|---|---|

(a) If the fault is not listed in the problem symptoms table, proceed to A.
(b) If the fault is listed in the problem symptoms table, proceed to B.

B → **Go to step 7**

A

| 7 | PERFORM TROUBLESHOOTING ACCORDING TO MALFUNCTION SYMPTOM |
|---|---|

(a) Terminals of ECU (See page DL-106)
(b) DATA LIST/ACTIVE TEST (See page DL-81)

NEXT

| 8 | ADJUST, REPAIR OR REPLACE |
|---|---|

NEXT

| 9 | CONFIRMATION TEST |
|---|---|

NEXT

**END**

# OPERATION CHECK

**1. FUNCTIONS AND OPERATING CONDITIONS**

(a) The wireless door LOCK/UNLOCK function:
This wireless door lock control function operates only when the following 4 conditions are met:
(1) There is no wireless transmitter in the cabin.
(2) All the doors are closed.
(3) The power door lock system is functioning normally.
(4) The function is not disabled by customization.
HINT:
The UNLOCK function operates even when any of the doors are open.

(b) The wireless transmitter operational range differs depending on the situation.
(1) The operational range differs depending on the user, the way the transmitter is held, and the location.
(2) In certain areas, the operational range will be reduced due to the vehicle body shape and the influence of the surrounding environment.
(3) Since the transmitter uses weak radio waves, the operational range may be reduced or the transmitter may not function if interference or stronger radio waves occur in the area where the transmitter is used.
(4) When the battery is low, the operational range is reduced and/or the transmitter may not function.
HINT:
If the transmitter has been left in a place that is exposed to direct sunlight, such as on the instrument panel, the battery may be weakened or other problems may occur.

**2. CHECK WIRELESS DOOR LOCK CONTROL FUNCTIONS**

HINT:
- The switches built into the door control transmitter send radio waves to the door lock control receiver.
- The operational range must be taken into account during checks.

(a) Establish conditions that allow the wireless control function to be operated successfully.

(b) Check these basic functions.
(1) Check that all the doors lock when the LOCK switch is pressed.
(2) Check that the driver's door unlocks when the UNLOCK switch is pressed once, and all doors unlock when pressed twice within 3 seconds.

(c) Check the automatic lock function.
(1) Check that if the driver's door or all doors are unlocked with the UNLOCK switch and none of the doors are opened or locked within approximately 60 seconds, the doors automatically re-lock.

(2) Check that if the driver's door or all doors are unlocked with the UNLOCK switch and a door is opened or locked within approximately 60 seconds, the automatic lock function does not operate.

(d) Check the interior light ON function.
HINT:
Turn the interior light switch to the DOOR position before the check.
(1) Check that the interior light comes on simultaneously with the unlocking operation when the UNLOCK switch has been pressed.
(2) Check that the interior light goes off in approximately 15 seconds if none of the doors is opened after the unlocking operation.

(e) Check the answer back function.
(1) When the doors are locked by wireless operation, the hazard warning lights flash once and the wireless door lock buzzer sounds once.
(2) When the doors are unlocked by wireless operation, the hazard warning lights flash twice and the wireless door lock buzzer sounds twice.
(3) When the luggage compartment door is opened by wireless operation, the wireless door lock buzzer sounds.

(f) Check the switch operation fail-safe function.
(1) Check that the doors cannot be locked by operating a switch while the wireless transmitter is in the cabin.
(2) Check that the doors cannot be locked or unlocked by operating a switch on the unregistered transmitter, and that the doors are locked and unlocked by operating a switch on the registered transmitter.

(g) Check the chattering prevention function.
(1) Check that the corresponding operation occurs only once, and does not repeat itself while the switch is kept pressed. Check that the corresponding operation is carried out when the switch is operated repeatedly at 1-second intervals.

(h) Check the luggage compartment door opener function.
(1) Check that the luggage compartment door opens when the LUGGAGE OPEN switch is held down for 0.6 seconds or more.

(i) Check the door ajar warning function.
(1) Check that the wireless door lock buzzer sounds for approximately 10 seconds when the LOCK switch is pressed with any of the doors ajar or open.

# CUSTOMIZE PARAMETERS

HINT:
The following items can be customized.

**NOTICE:**

- **When the customer requests a change in a function, first make sure that customization of the function(s) is possible.**
- **Be sure to record the current settings before customizing.**
- **When troubleshooting a function, first make sure that the function is not set to OFF.**

## WIRELESS DOOR LOCK CONTROL SYSTEM

| Display (item) | Default | Function | Setting |
|---|---|---|---|
| WIRELESS OPER<br>(Wireless door lock control function) | ON | Function that turns wireless door lock function ON/OFF | ON/OFF |
| HAZARD ANS BACK<br>(Hazard answer-back for wireless door lock control) | ON | • When the doors are locked by wireless operation, the hazard warning lights flash once.<br>• When the doors are unlocked by wireless operation, the hazard warning lights flash twice. | ON/OFF |
| OPEN DOOR WARN<br>(Door ajar warning) | ON | The buzzer sounds when LOCK is pressed when any of the doors are ajar. | ON/OFF |
| AUTO LOCK DELAY<br>(Auto lock time) | 60 s | This function regulates the interval between unlocking and automatic relocking of doors. | 30 s/60 s |
| UNLOCK /2OPER<br>(Wireless unlock operated twice) | ON | This function unlocks the driver's door when the UNLOCK switch is pressed once, and unlocks all doors when pressed twice within 3 seconds.<br>If set to OFF, pressing UNLOCK once unlocks all doors. | ON/OFF |
| ALARM FUNCTION<br>(Panic function) | ON | This function operates the theft deterrent system when PANIC is pressed and held for 0.8 seconds. | ON/OFF |
| WIRLS BUZZ RESP<br>(Wireless buzzer answer-back) | ON | Wireless door lock buzzer response/ON or OFF | ON/OFF |
| TRUNK LID OPER<br>(Wireless trunk opener function setting) | 0.6 s PR ON | This function changes operation method of transmitter to open luggage compartment door.<br>1 TIME: Push 1 time<br>2 TIMES: Push 2 times<br>0.6 s PR: Push 0.6 seconds<br>OFF: Does not operate | 1 TIME/2 TIMES/0.6 s PR/ OFF |

# PROBLEM SYMPTOMS TABLE

If a normal system code is displayed during the DTC check, but the problem still occurs, check the circuits for each problem symptom in the order given in the table below and proceed to the relevant troubleshooting page.

HINT:

- The following is the troubleshooting procedure for the wireless door lock control of a vehicle without the smart key system.
- For the troubleshooting procedure for the wireless door lock control of a vehicle with the smart key system, refer to the wireless door lock control system (without Smart Key System).
- Inspect the fuse and relay before investigating the suspected areas shown in the table below.
- Inspect each malfunction circuit in numerical order for its corresponding symptom.

## WIRELESS DOOR LOCK CONTROL SYSTEM:

| Symptom | Suspected area | See page |
|---|---|---|
| The wireless door lock control system does not operate. | 1. Perform the operation check | DL-71 |
| | 2. Check if the CAN communication DTC is output | CA-31 |
| | 3. Door control transmitter | DL-210 |
| | 4. Door courtesy light switch circuit | LI-52 |
| | 5. Luggage compartment door courtesy light switch | DL-44 |
| | 6. Power source circuit | DL-89 |
| | 7. Replace door control receiver | - |
| | 8. Replace certification ECU | - |
| | 9. If the symptom still occurs after the above areas have been inspected and proved to be normal, replace the main body ECU (Instrument panel J/B) | - |
| The automatic lock function does not operate normally. | 1. Perform the operation check | DL-71 |
| | 2. Door courtesy light switch circuit | LI-52 |
| | 3. If the symptom still occurs after the above areas have been inspected and proved to be normal, replace the main body ECU (Instrument panel J/B) | - |
| The illuminated entry function only does not operate. | 1. Perform the operation check | DL-71 |
| | 2. Lighting system | LI-12 |
| | 3. If the symptom still occurs after the above areas have been inspected and proved to be normal, replace the main body ECU (Instrument panel J/B) | - |
| The answer back function does not operate (Wireless door lock buzzer). | 1. Perform the operation check | DL-71 |
| | 2. Wireless door lock buzzer circuit | DL-86 |
| | 3. Replace certification ECU | - |
| | 4. If the symptom still occurs after the above areas have been inspected and proved to be normal, replace the main body ECU (Instrument panel J/B) | - |
| The answer back function does not operate (Hazard warning light). | 1. Perform the operation check | DL-71 |
| | 2. Wire harness | - |
| | 3. Turn signal flasher | LI-138 |
| | 4. If the symptom still occurs after the above areas have been inspected and proved to be normal, replace the main body ECU (Instrument panel J/B) | - |

| Symptom | Suspected area | See page |
|---|---|---|
| The door ajar warning function only does not operate. | 1. Perform the operation check | DL-71 |
| | 2. Door courtesy switch circuit | LI-52 |
| | 3. If the symptom still occurs after the above areas have been inspected and proved to be normal, replace the main body ECU (Instrument panel J/B) | - |
| The panic alarm function only does not operate. | 1. Perform the operation check | DL-71 |
| | 2. Door control transmitter | DL-210 |
| | 3. If the symptom still occurs after the above areas have been inspected and proved to be normal, replace the main body ECU (Instrument panel J/B) | - |
| The panic alarm function does not operate (Vehicle horn). | 1. Perform the operation check | DL-71 |
| | 2. Horn circuit | TD-25 |
| | 3. If the symptom still occurs after the above areas have been inspected and proved to be normal, replace the main body ECU (Instrument panel J/B) | - |
| The panic alarm function does not operate (Security horn). | 1. Perform the operation check | DL-71 |
| | 2. Security horn circuit | TD-27 |
| | 3. Replace certification ECU | - |
| | 4. If the symptom still occurs after the above areas have been inspected and proved to be normal, replace the main body ECU (Instrument panel J/B) | - |
| The panic alarm function does not operate (Hazard warning light). | 1. Perform the operation check | DL-71 |
| | 2. Wire harness | - |
| | 3. Turn signal flasher | LI-138 |
| | 4. If the symptom still occurs after the above areas have been inspected and proved to be normal, replace the main body ECU (Instrument panel J/B) | - |
| The panic alarm function does not operate (Headlight or taillight). | 1. Perform the operation check | DL-71 |
| | 2. Lighting system | LI-12 |
| | 3. If the symptom still occurs after the above areas have been inspected and proved to be normal, replace the main body ECU (Instrument panel J/B) | - |

# TERMINALS OF ECU

**1. CHECK MAIN BODY ECU (INSTRUMENT PANEL J/B)**

(a) Disconnect the main body ECU (instrument panel J/B) connectors.

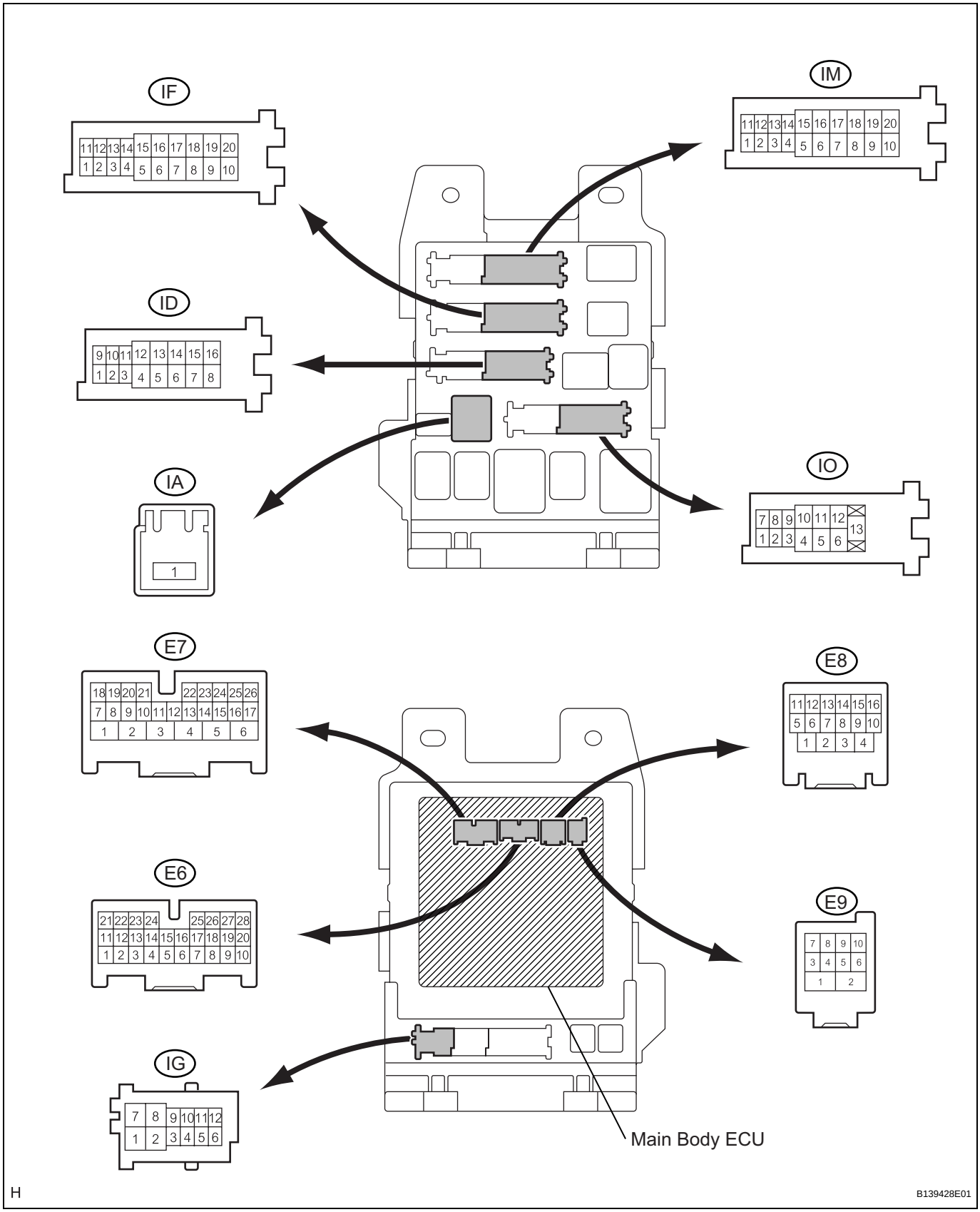

(b) Measure the resistance and voltage between each terminal of the wire harness side connectors and body ground.

| Symbols (Terminal No.) | Wiring Color | Terminal Description | Condition | Specified Condition |
|---|---|---|---|---|
| RCTY (E6-7) - Body ground | GR - Body ground | Rear courtesy light switch RH input | Rear door RH CLOSED (OFF) → OPEN (ON) | 10 kΩ or higher → Below 1 Ω |
| PCTY (E6-21) - Body ground | Y - Body ground | Passenger side courtesy light switch input | Passenger side door CLOSED (OFF) → OPEN (ON) | 10 kΩ or higher → Below 1 Ω |
| LGCY (E6-25) - Body ground | W - Body ground | Luggage compartment door courtesy light switch input | Luggage compartment door CLOSED (OFF) → OPEN (ON) | 10 kΩ or higher → Below 1 Ω |
| DCTY (E7-24) - Body ground | L - Body ground | Driver side door courtesy light switch input | Driver side door CLOSED (OFF) → OPEN (ON) | 10 kΩ or higher → Below 1 Ω |
| ACC (IA-1) - Body ground | B - Body ground | Ignition power supply (ACC signal) | Engine switch on (ACC) → off | 10 to 14 V → Below 1 V |
| IG (IA-1) - Body ground | B - Body ground | Ignition power supply (IG signal) | Engine switch on (IG) → off | 10 to 14 V → Below 1 V |
| BATB (IA-1) - Body ground | B - Body ground | +B (power battery system) power supply | Always | 10 to 14 V |
| ALTB (ID-16) - Body ground | W - Body ground | +B (power system alternator system) power supply | Always | 10 to 14 V |
| GND1 (IF-10) - Body ground | W-B - Body ground | Ground | Always | Below 1 Ω |
| GND2 (IM-9) - Body ground | W-B - Body ground | Ground | Always | Below 1 Ω |
| LCTY (IO-7) - Body ground | LG - Body ground | Rear courtesy light switch LH input | Rear door LH CLOSED (OFF) → OPEN (ON) | 10 kΩ or higher → Below 1 Ω |

If the result is not as specified, there may be a malfunction on the wire harness side.

(c) Reconnect the main body (instrument panel J/B) connectors.

(d) Measure the voltage between each terminal of the wire harness side connectors and body ground.

| Symbols (Terminal No.) | Wiring Color | Terminal Description | Condition | Specified Condition |
|---|---|---|---|---|
| TR+ (E7-1) - Body ground | B - Body ground | Luggage compartment door opener motor input | Luggage compartment door CLOSED (LOCKED) → OPEN (UNLOCKED) | Below 1 V → 10 to 14 V*1 |
| HAZ (E8-4) - Body ground | W - Body ground | Turn signal flasher relay signal | Any transmitter switch is pressed → not pressed | Below 1 V → 10 to 14 V*2 |

HINT:

- *1: When operating the motor.
- *2: When operating the answer back function.

**2. CHECK CERTIFICATION ECU ASSEMBLY**

(a) Disconnect the E58 ECU connector.

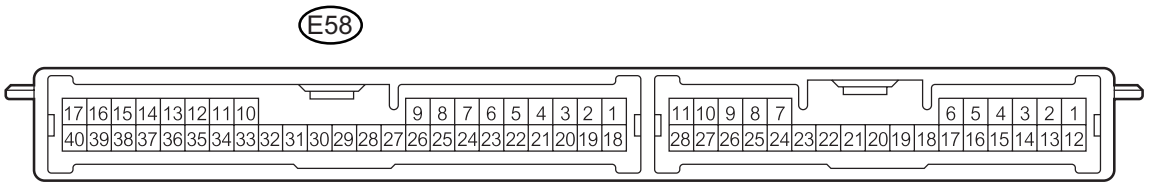


(b) Measure the voltage and resistance of the wire harness side connector.

| Symbols (Terminal No.) | Wiring Color | Terminal Description | Condition | Specified Condition |
|---|---|---|---|---|
| +B (E58-1) - E (E58-17) | W - W-B | Battery power supply | Always | 10 to 14 V |
| E (E58-17) - Body ground | W-B - Body ground | Ground | Always | Below 1 Ω |
| IG (E58-18) - E (E58-17) | LG - W-B | IG power supply | Engine switch on (IG) | 10 to 14 V |
| IG (E58-18) - E (E58-17) | LG - W-B | IG power supply | Engine switch off | Below 1 V |

If the result is not as specified, there may be a malfunction on the wire harness side.

(c) Reconnect the E58 ECU connector.

(d) Measure the voltage of the connector.

| Symbols (Terminal No.) | Wiring Color | Terminal Description | Condition | Specified Condition |
|---|---|---|---|---|
| BZR (E58-21) - Body ground | O - Body ground | Wireless door lock buzzer | Wireless door lock buzzer OFF → ON | 0 V → Pulse generation |
| RC0 (E58-29) - E (E58-17) | G - W-B | Door control receiver power supply | Engine switch off, all doors closed and transmitter switch not pressed | Below 1 V |
| RC0 (E58-29) - E (E58-17) | G - W-B | Door control receiver power supply | Engine switch off, all doors closed and transmitter switch pressed | 4.6 to 5.4 V |
| RDA (E58-38) - E (E58-17) | Y - W-B | Door control receiver output signal | Engine switch off, all doors closed and transmitter switch not pressed | 10 to 14 V |
| RDA (E58-38) - E (E58-17) | Y - W-B | Door control receiver output signal | Engine switch off, all doors closed and transmitter switch pressed | Pulse generation |

If the result is not as specified, the ECU may have a malfunction.

# DIAGNOSIS SYSTEM

**1. DESCRIPTION**

The main body ECU stores trouble codes when trouble occurs on the vehicle.
The diagnostic system allows for reading of the trouble codes from the DLC3.
Use the intelligent tester to check and solve the problem.

**2. CHECK DLC3**

(a) The main body ECU uses ISO 15765-4 for communication protocol. The terminal arrangement of the DLC3 complies with SAE J1962 and matches the ISO 15765-4 format.

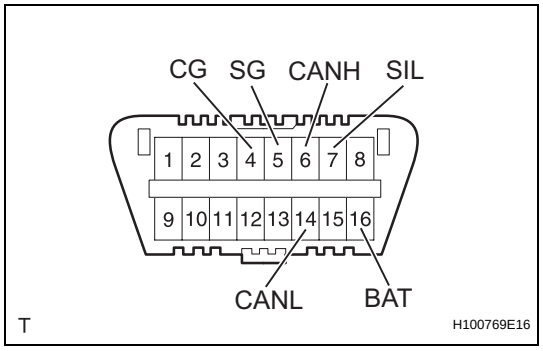


| Symbols (Terminal No.) | Terminal Description | Condition | Specified condition |
|---|---|---|---|
| SIL (7) - SG (5) | Bus "+" line | During transmission | Pulse generation |
| CG (4) - Body ground | Chassis ground | Always | Below 1 Ω |
| SG (5) - Body ground | Signal ground | Always | Below 1 Ω |
| BAT (16) - Body ground | Battery positive | Always | 10 to 14 V |
| CANH (6) - CANL (14) | CAN bus line | Engine switch off* | 54 to 67 Ω |
| CANH (6) - CG (4) | HIGH-level CAN bus line | Engine switch off* | 200 Ω or higher |
| CANL (14) - CG (4) | LOW-level CAN bus line | Engine switch off* | 200 Ω or higher |
| CANH (6) - BAT (16) | HIGH-level CAN bus line | Engine switch off* | 6 kΩ or higher |
| CANL (14) - BAT (16) | LOW-level CAN bus line | Engine switch off* | 6 kΩ or higher |

**NOTICE:**
***: Before measuring the resistance, leave the vehicle as is for at least 1 minute and do not operate the engine switch, any other switches or the doors.**
If the result is not as specified, the DLC3 may have a malfunction. Repair or replace the harness and connector.

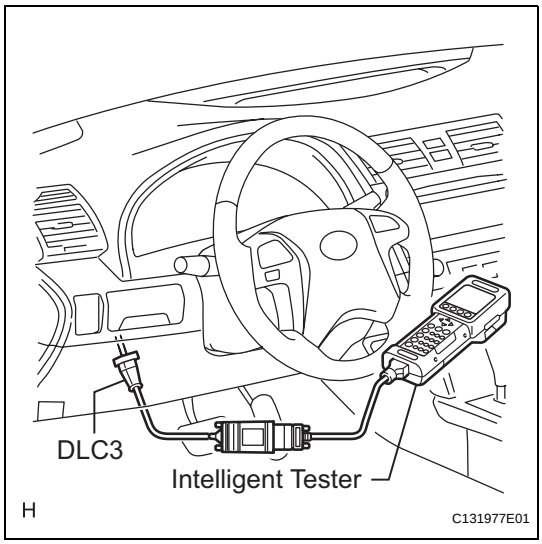


(b) Connect the cable of the intelligent tester (with CAN VIM) to the DLC3, turn the engine switch on (IG) and attempt to use the intelligent tester. If the screen displays a communication error message, a problem exists in the vehicle or in the tester.
- If communication is normal when the tool is connected to another vehicle, inspect the DLC3 on the original vehicle.
- If communication is still impossible when the tool is connected to another vehicle, the problem is probably in the tool itself. Consult the Service Department listed in the tool's instruction manual.

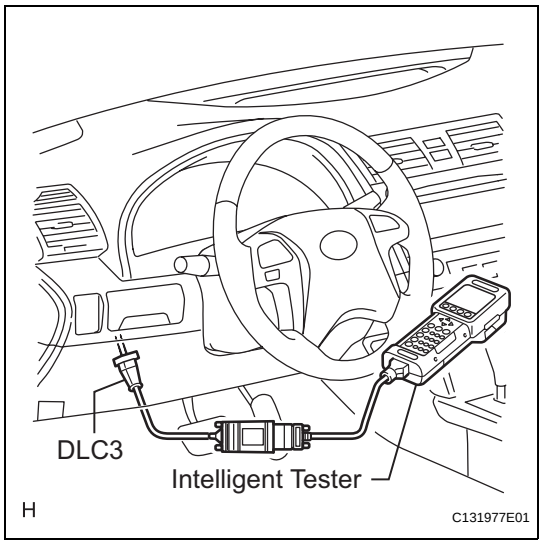


## DTC CHECK / CLEAR

**1. CHECK DTC**

(a) Connect the intelligent tester to the DLC3.
(b) Turn the engine switch on (IG).
(c) Enter the following menu items: DIAGNOSIS / ENHANCED OBD II / DTC INFO / CURRENT CODES.
(d) Read the DTC by following the prompts on the tester screen.
HINT:
Refer to the intelligent tester operator's manual for further details.

**2. CLEAR DTC**

(a) Connect the intelligent tester to the DLC3.
(b) Turn the engine switch on (IG).
(c) Enter the following menu items: DIAGNOSIS / ENHANCED OBD II / DTC INFO / CLEAR CODES.
(d) Erase the DTC by following the directions on the tester screen.

HINT:
Refer to the intelligent tester operator's manual for further details.

# DATA LIST / ACTIVE TEST

## 1. DATA LIST

HINT:
Using the intelligent tester DATA LIST allows switch, sensor, actuator and other item values to be read without removing any parts. Reading the DATA LIST early in troubleshooting is one way to shorten labor time.

(a) Connect the intelligent tester (with CAN VIM) to the DLC3.
(b) Turn the engine switch on (IG).
(c) Enter the following menus: DIAGNOSIS / OBD/ MOBD / BODY or SMART / DATA LIST.
(d) Read the DATA LIST according to the display on the tester.

**MAIN BODY (Main body ECU):**

| Item | Measurement Item/Display (Range) | Normal Condition | Diagnostic Note |
|---|---|---|---|
| WIRELESS OPER | Wireless door lock control function / ON or OFF | ON: Operating<br>OFF: Not operating | - |
| HAZARD ANS BACK | Hazard answer-back of wireless / ON or OFF | ON: Operating<br>OFF: Not operating | - |
| OPEN DOOR WARN | Open door warning / ON or OFF | ON: Operating<br>OFF: Not operating | - |
| AUTO LOCK DELAY | Automatic lock time / 60 s or 30 s | 60 s: 60 seconds<br>30 s: 30 seconds | - |
| UNLOCK /2OPER | 2 times operation of wireless unlock / ON or OFF | ON: All doors unlock when UNLOCK is pressed twice<br>OFF: All doors unlock when UNLOCK is pressed once | - |
| WIRLS BUZZ RESP | Wireless door lock buzzer response / ON or OFF | ON: Operating<br>OFF: Not operating | - |
| TRUNK LID OPER | Luggage compartment door open function type / 1 TIME/2 TIME/ 0.6 s PR/ OFF | 1 TIME: Luggage compartment door opens when LUGGAGE OPEN switch is pressed once<br>2 TIME: Luggage compartment door opens when LUGGAGE OPEN switch is pressed twice<br>0.6 s PR: Luggage compartment door opens when LUGGAGE OPEN switch is pressed and held down for 0.6 seconds.<br>OFF: Not operating | - |

**SMART (Certification ECU):**

| Item | Measurement Item/Display (Range) | Normal Condition | Diagnostic Note |
|---|---|---|---|
| ALARM FUNCTION | Panic function / ON or OFF | ON: Operating<br>OFF: Not operating | - |

## 2. ACTIVE TEST

HINT:
Performing the intelligent tester ACTIVE TEST allows relay, VSV, actuator and other items to be operated without removing any parts. Performing the ACTIVE TEST early in troubleshooting is one way to shorten the labor time. The DATA LIST can be displayed during the ACTIVE TEST.

(a) Connect the intelligent tester (with CAN VIM) to the DLC3.
(b) Turn the engine switch on (IG).
(c) Enter the following menus: DIAGNOSIS / OBD/ MOBD / BODY or SMART / ACTIVE TEST.

(d) Perform the ACTIVE TEST according to the display on the tester.

**MAIN BODY (Main body ECU):**

| Item | Tester Detail | Diagnostic Note |
|---|---|---|
| HAZARD | Turns the turn signal flasher relay ON / OFF | Observe headlight and rear combination light for correct operation |
| VEHICLE HORN | Vehicle horn ON / OFF | - |
| TRUNK/BDOR OPEN | Turns luggage compartment door opener motor ON / OFF | Observe luggage compartment door |

**SMART (Certification ECU):**

| Item | Tester Detail | Diagnostic Note |
|---|---|---|
| WIRELESS BUZZER | Wireless door lock buzzer ON / OFF | - |

# DIAGNOSTIC TROUBLE CODE CHART

HINT:
If a trouble code is indicated during the DTC check, check the circuit listed for that code in the table below. Then proceed to the appropriate page.

## WIRELESS DOOR LOCK CONTROL SYSTEM:

| DTC No. | Detection Item | Trouble Area | See page |
|---|---|---|---|
| B1242 | Wireless Door Lock Tuner Circuit Malfunction | 1. Door control receiver<br>2. Wire harness<br>3. Certification ECU | DL-83 |

| DTC | B1242 | Wireless Door Lock Tuner Circuit Malfunction |
|---|---|---|

## DESCRIPTION

- The electrical key antenna is used to receive electric waves relating to the entry functions of the smart access system with push-button start. The certification ECU decodes the requested smart access system with push-button start operation by identifying a key code based on electric waves received via the electrical key antenna and the door control receiver.
- The door control receiver receives a signal from the wireless door control transmitter and sends signals to the main body ECU through the certification ECU.
- The certification ECU then sends a command, according to the requested operation, to each ECU. (e.g. If door lock operation is requested, the ECU sends a door lock command to the main body ECU.)

| DTC No. | DTC Detection Condition | Trouble Area |
|---|---|---|
| B1242 | The certification ECU detects that there is a short in the circuit between terminals RSSI, or between terminals DATA and RDA. | • Door Control Receiver<br>• Wire harness<br>• Certification ECU |

## WIRING DIAGRAM

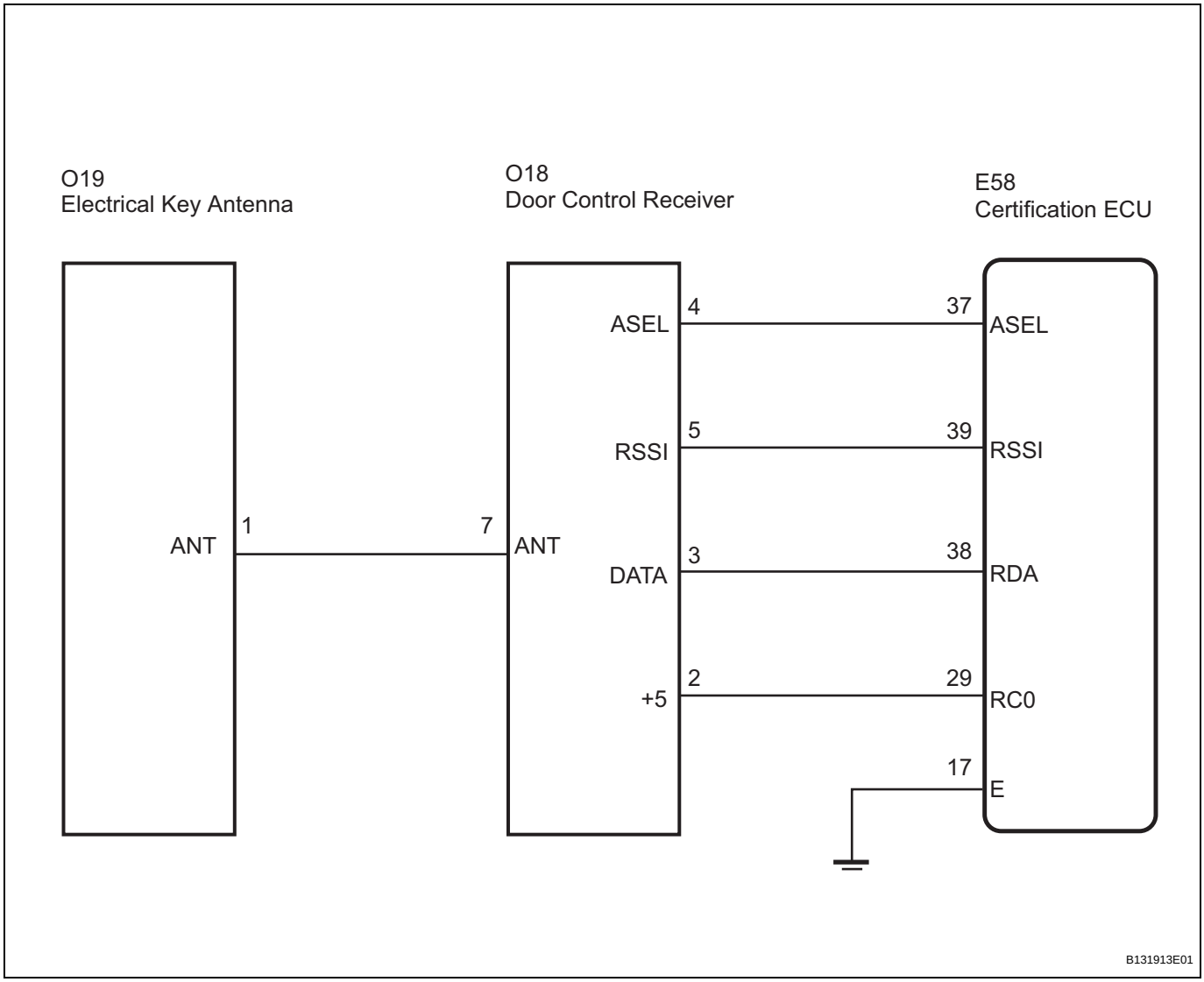

## INSPECTION PROCEDURE

### 1 CHECK HARNESS AND CONNECTOR (CERTIFICATION ECU - DOOR CONTROL RECEIVER)

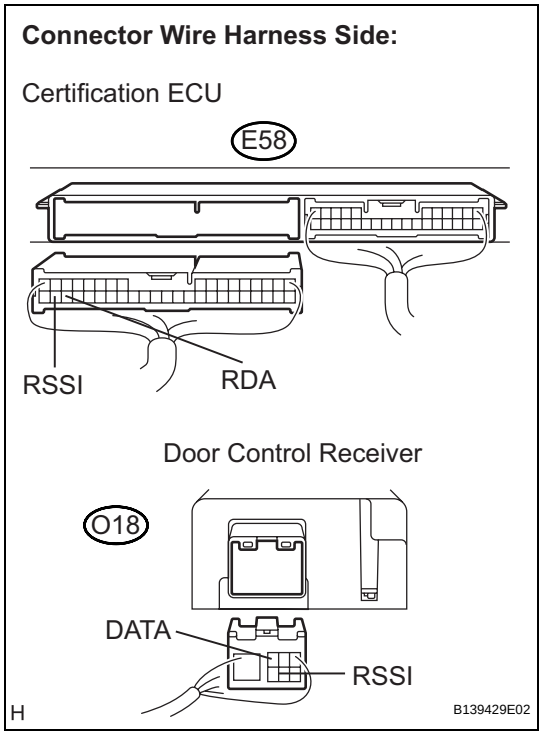


(a) Disconnect the E58 certification ECU connector and O18 door control receiver connector.

(b) Measure the resistance according to the value(s) in the table below.

**Standard resistance**

| Symbol (Tester Connection) | Condition | Specified Condition |
|---|---|---|
| RSSI (E58-39) - RSSI (O18-5) | Always | Below 1 Ω |
| RDA (E58-38) - DATA (O18-3) | Always | Below 1 Ω |
| RSSI (E58-39) - RDA (E58-38) | Always | 10 kΩ or higher |
| RSSI (E58-39) - Body ground | Always | 10 kΩ or higher |
| RDA (E58-38) - Body ground | Always | 10 kΩ or higher |

**NG** → **REPAIR OR REPLACE HARNESS OR CONNECTOR**

**OK**

### 2 INSPECT CERTIFICATION ECU

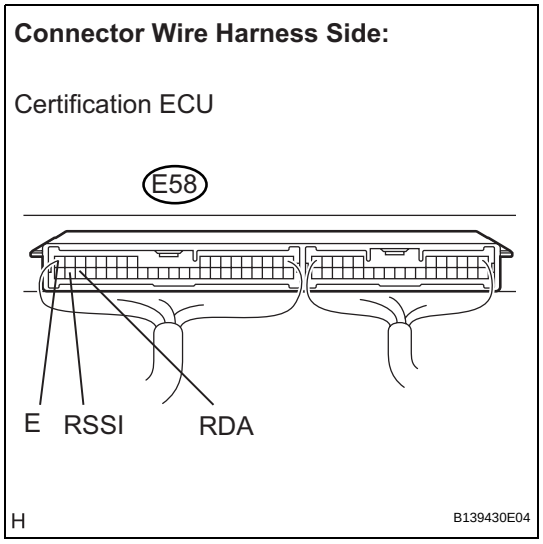


(a) Reconnect the E58 ECU connector.

(b) Measure the voltage according to the value(s) in the table below.

**Standard voltage**

| Symbol (Tester Connection) | Condition | Specified Condition |
|---|---|---|
| RSSI (E58-39) - E (E58-17) | Engine switch OFF, all doors closed, the electrical key is not in the actuation area | Below 1 V |
| | Engine switch OFF, all doors closed, the electrical key is in the actuation area | 4.6 to 5.4 V |
| RDA (E58-38) - E (E58-17) | Engine switch OFF, all doors closed and transmitter switch not pressed | Below 1 V |
| | Engine switch OFF, all doors closed and transmitter switch pressed | 4.6 to 5.4 V |

**NG** → **REPLACE CERTIFICATION ECU**

OK

| 3 | REPLACE DOOR CONTROL RECEIVER |
|---|---|

(a) Replace the door control receiver with a normal one.
(b) Perform the registration procedure.
**OK:**
**The system returns to normal operation.**

NG → **REPLACE CERTIFICATION ECU**

OK

**END**

# Wireless Door Lock Buzzer Circuit

## DESCRIPTION

The certification ECU activates the wireless door lock buzzer when detecting a lock/unlock signal from the door control transmitter.

## WIRING DIAGRAM

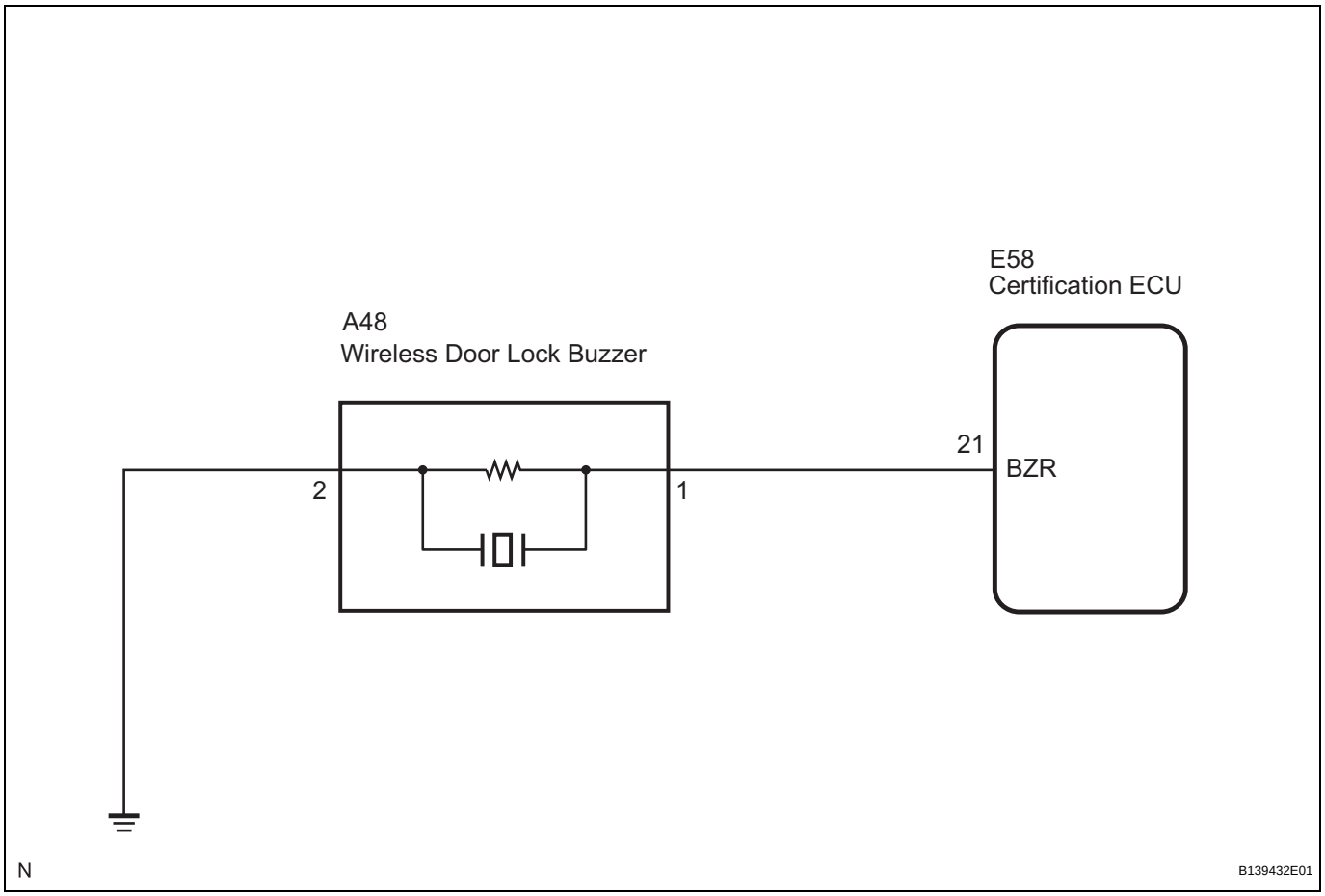

## INSPECTION PROCEDURE

### 1 CHECK HARNESS AND CONNECTOR (CERTIFICATION ECU - WIRELESS DOOR LOCK BUZZER - BODY GROUND)

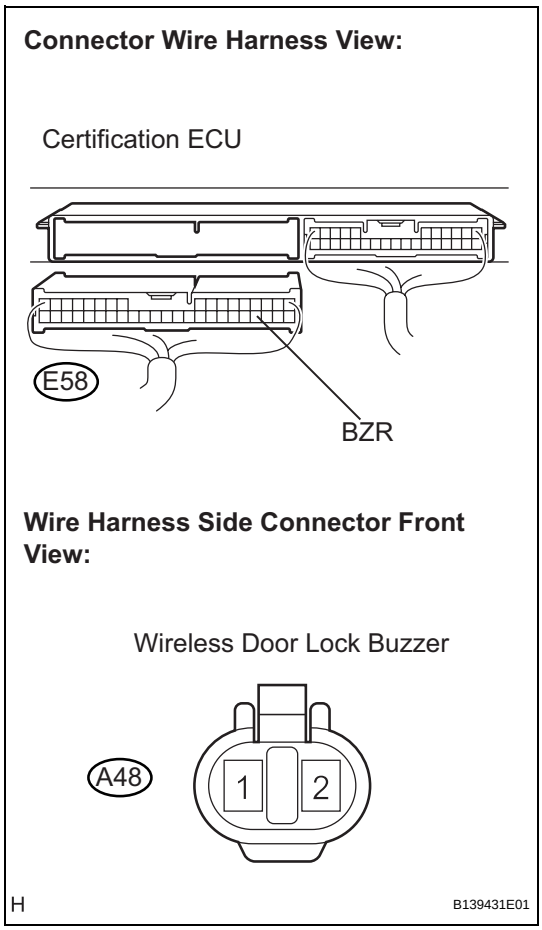


(a) Disconnect the E58 certification ECU connector and A48 wireless door lock buzzer connector.

(b) Measure the resistance according to the value(s) in the table below.

**Standard resistance**

| Symbol (Tester Connection) | Condition | Specified Condition |
|---|---|---|
| BZR (E58-21) - A48-1 | Always | Below 1 Ω |
| BZR (E58-21) - Body ground | Always | 10 kΩ or higher |
| A48-2 - Body ground | Always | Below 1 Ω |

NG → **REPAIR OR REPLACE HARNESS OR CONNECTOR**

OK

### 2 INSPECT WIRELESS DOOR LOCK BUZZER

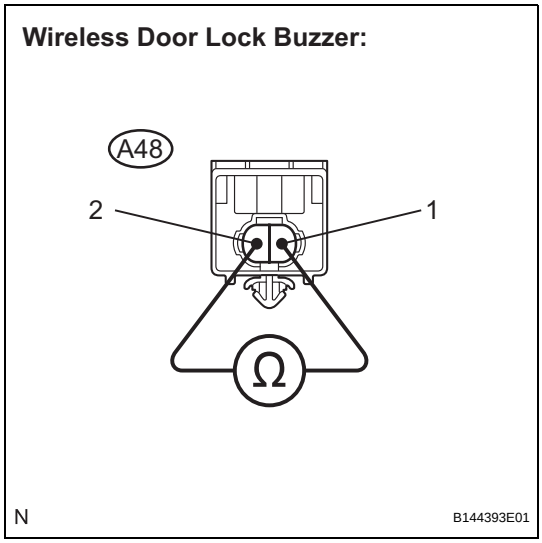


(a) Measure the resistance according to the value(s) in the table below.

HINT:

The buzzer activation circuit is built into the ECU, not into the buzzer itself. When battery voltage is applied directly to the buzzer, the buzzer will not sound.

**Standard resistance**

| Tester Connection | Condition | Specified Condition |
|---|---|---|
| A48-1 - A48-2 | Always | Approx. 1 kΩ |

NG → **REPLACE WIRELESS DOOR LOCK BUZZER**

**OK**

**PROCEED TO NEXT CIRCUIT INSPECTION SHOWN IN PROBLEM SYMPTOMS TABLE**

# Power Source Circuit

## DESCRIPTION

The certification ECU provides power for the door control receiver operation.

## WIRING DIAGRAM

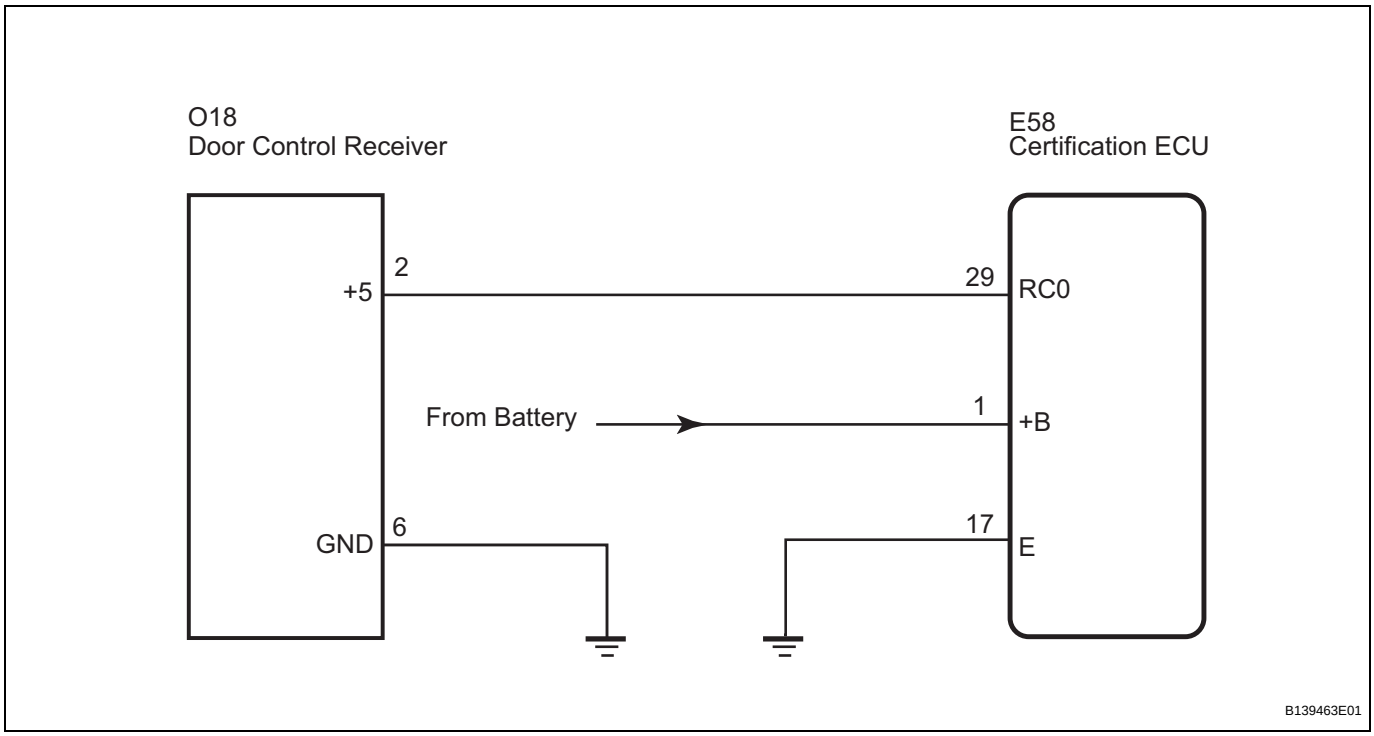


## INSPECTION PROCEDURE

| 1 | INSPECT CERTIFICATION ECU (+B TERMINAL) |
|---|---|

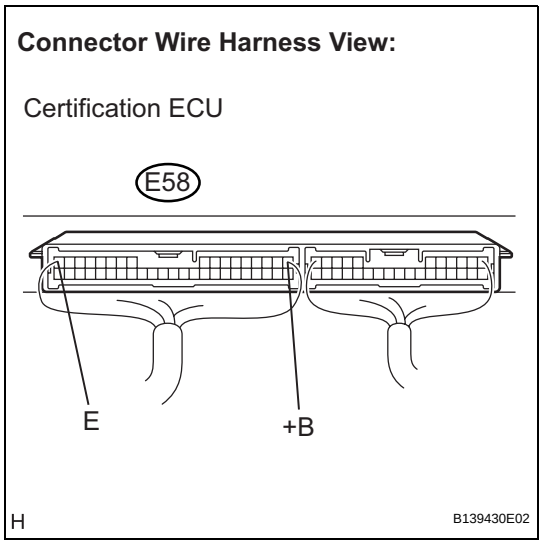


(a) Measure the voltage according to value(s) in the table below.

**Standard voltage**

| Symbol (Tester Connection) | Condition | Specified Condition |
|---|---|---|
| +B (E58-1) - E (E58-17) | Always | 10 to 14 V |

**NG** → **REPAIR OR REPLACE HARNESS OR CONNECTOR**

**OK**

DL

## 2 INSPECT CERTIFICATION ECU (RC0 TERMINAL)

**Connector Wire Harness View:**

Certification ECU

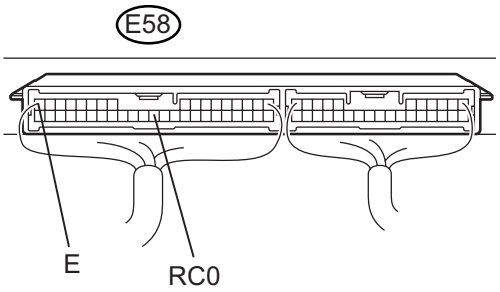


H B139430E03

(a) Measure the voltage according to value(s) in the table below.

**Standard voltage**

| Symbol (Tester Connection) | Condition | Specified Condition |
|---|---|---|
| RC0 (E58-29) - E (E58-17) | Engine switch off, all doors closed and transmitter switch not pressed | Below 1 V |
| | Engine switch off, all doors closed and transmitter switch pressed | 4.6 to 5.4 V |

**OK** → **Go to step 4**

**NG**

## 3 CHECK HARNESS AND CONNECTOR (CERTIFICATION ECU - BATTERY - BODY GROUND)

**Connector Wire Harness Side:**

Certification ECU

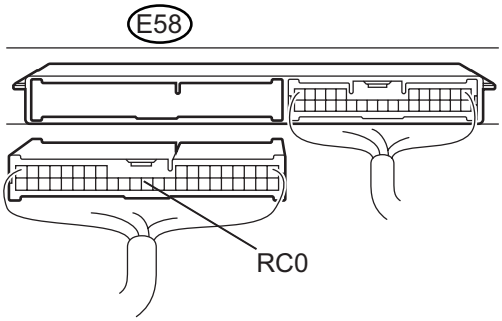


H E125974E10

(a) Disconnect the E58 certification ECU connector.
(b) Measure the voltage and resistance according to value(s) in the table below.

**Standard resistance**

| Symbol (Tester Connection) | Condition | Specified Condition |
|---|---|---|
| RC0 (E58-29) - Body ground | Always | Below 1 V |
| | Always | 10 kΩ or higher |

**NG** → **REPAIR OR REPLACE HARNESS OR CONNECTOR**

**OK**

**REPLACE CERTIFICATION ECU**

DL

## 4 CHECK HARNESS AND CONNECTOR (CERTIFICATION ECU - DOOR CONTROL RECEIVER)

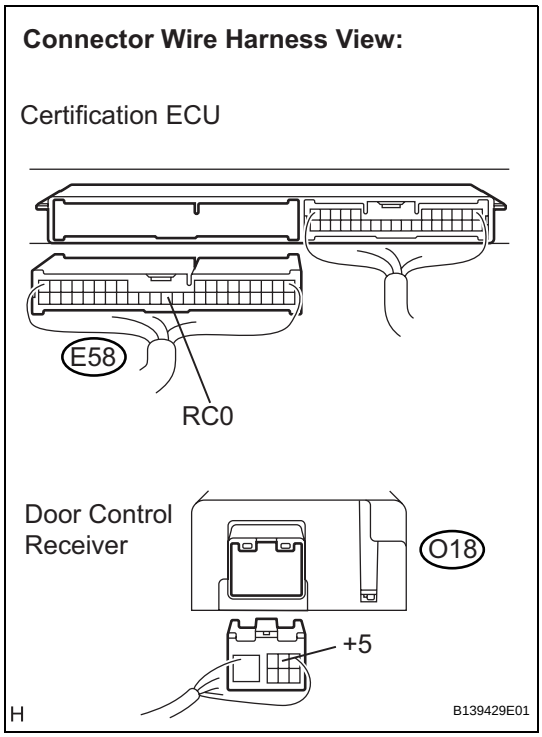


(a) Disconnect the O18 door control receiver connector.
(b) Measure the resistance according to the value(s) in the table below.

**Standard resistance**

| Symbol (Tester Connection) | Condition | Specified Condition |
|---|---|---|
| RC0 (E58-29) - +5 (O18-2) | Always | Below 1 Ω |

NG → **REPAIR OR REPLACE HARNESS OR CONNECTOR**

OK

## 5 CHECK HARNESS AND CONNECTOR (BODY GROUND)

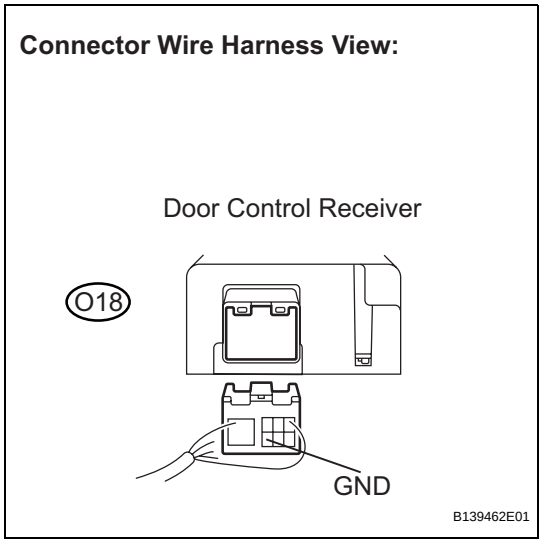


(a) Measure the resistance according to the value(s) in the table below.

**Standard resistance**

| Symbol (Tester Connection) | Condition | Specified Condition |
|---|---|---|
| GND (O18-6) - Body ground | Always | Below 1 Ω |

NG → **REPAIR OR REPLACE HARNESS OR CONNECTOR**

OK

**PROCEED TO NEXT CIRCUIT INSPECTION SHOWN IN PROBLEM SYMPTOMS TABLE**

# WIRELESS DOOR LOCK CONTROL SYSTEM (w/o Smart Key System)

## PARTS LOCATION

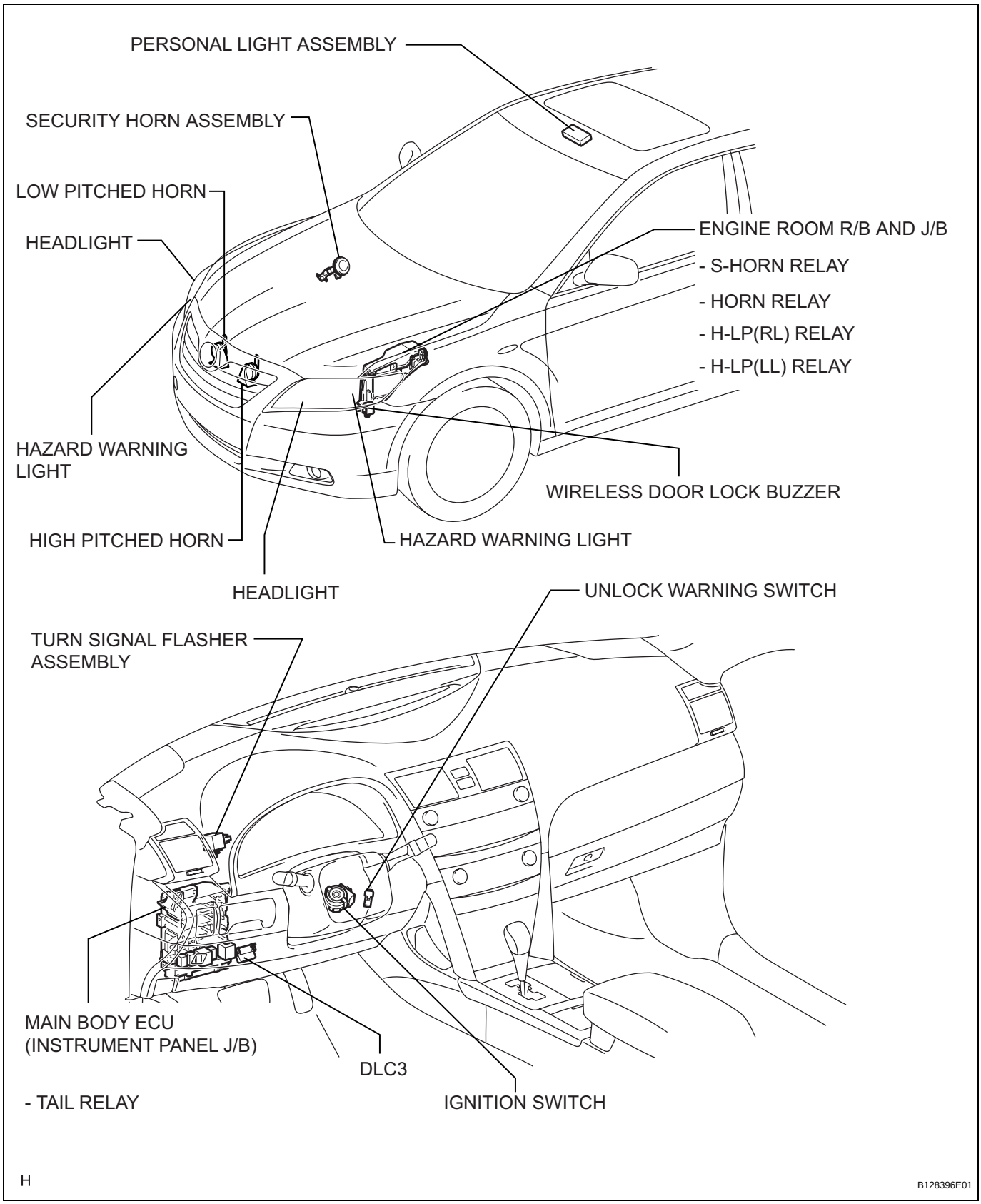


DL

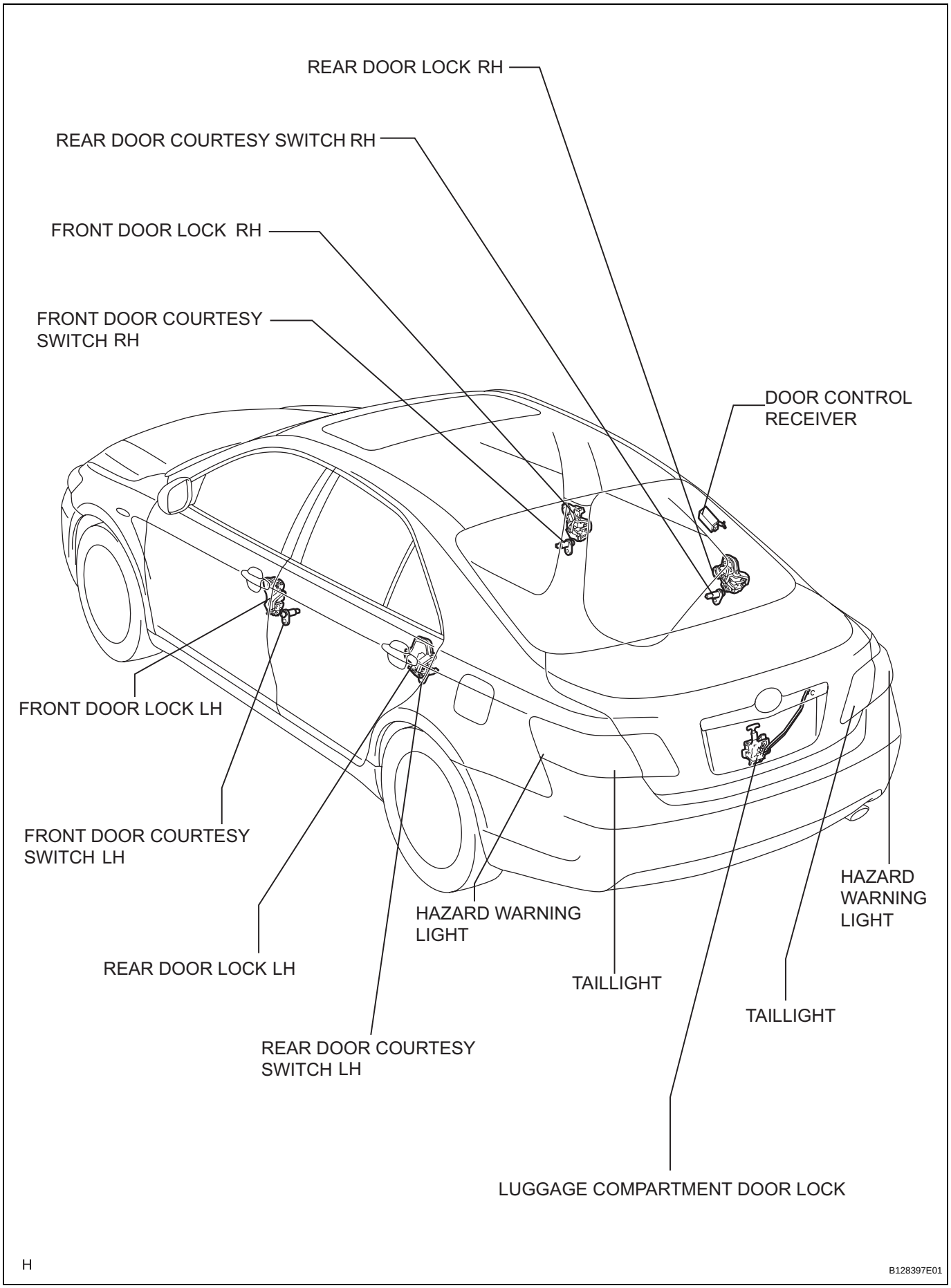
REAR DOOR LOCK RH
REAR DOOR COURTESY SWITCH RH
FRONT DOOR LOCK RH
FRONT DOOR COURTESY SWITCH RH
DOOR CONTROL RECEIVER
FRONT DOOR LOCK LH
FRONT DOOR COURTESY SWITCH LH
HAZARD WARNING LIGHT
HAZARD WARNING LIGHT
REAR DOOR LOCK LH
TAILLIGHT
TAILLIGHT
REAR DOOR COURTESY SWITCH LH
LUGGAGE COMPARTMENT DOOR LOCK
H
B128397E01

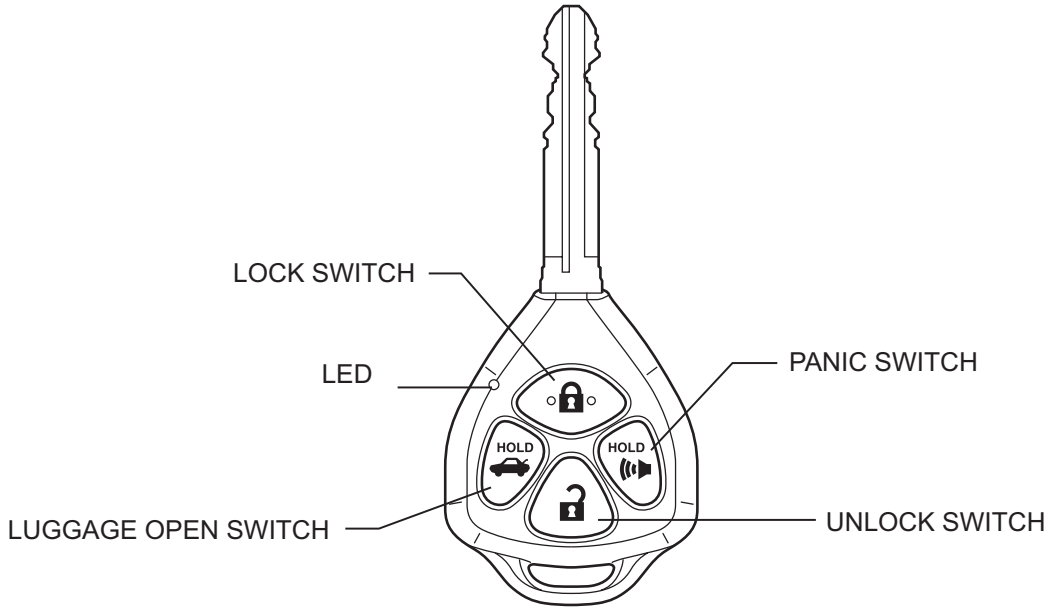


DOOR CONTROL TRANSMITTER

H

B128398E01

# SYSTEM DIAGRAM

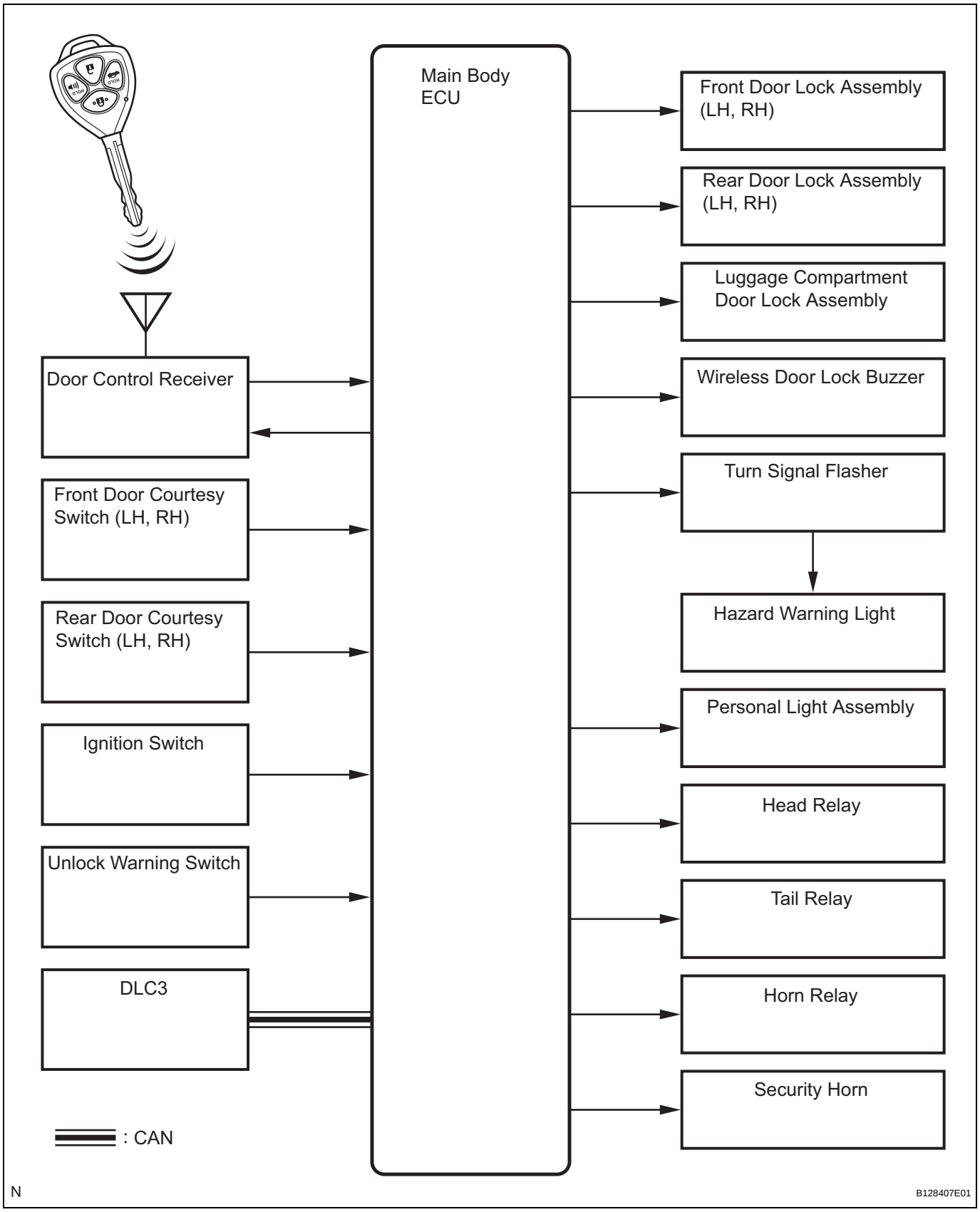


DL

# SYSTEM DESCRIPTION

## 1. WIRELESS DOOR LOCK CONTROL SYSTEM

The wireless door lock control system functions to lock and unlock all the doors from a distance. The system is controlled by a hand-held transmitter which sends radio waves to the door control receiver. The main body ECU performs an ID code identification process and engages the door lock control.

## 2. FUNCTION OF MAIN COMPONENTS

| Component | Function |
|---|---|
| Door control transmitter | • Has LOCK, UNLOCK, LUGGAGE OPEN, and PANIC switches.<br>• Transmits weak radio waves (recognition codes and function codes) to the door control receiver.<br>• Illuminates the indicator light (LED) during transmission. |
| Door control receiver | Receives weak radio waves (recognition codes and function codes) and outputs them as code data to the main body ECU. |
| • Front door courtesy light switch<br>• Rear door courtesy light switch<br>• Luggage compartment door courtesy light switch | Turns on when a door is opened and turns off when it is closed. Outputs door status codes (open or closed) to the main body ECU. |
| Unlock warning switch | Detects if the key is inserted in the ignition key cylinder or not. |
| Door lock position switch | Transmits the door lock positions of each door to the main body ECU. |
| Wireless door lock buzzer | Emits beep (answer back) when doors are locked or unlocked, or luggage compartment door is opened by wireless operation. |
| Main body ECU | Sends wireless door lock control signals in response to the code data from the door control receiver and signals from each switch. |

## 3. SYSTEM FUNCTION

The door control transmitter has the LOCK, UNLOCK, LUGGAGE OPEN, and PANIC switches. Operating these switches activates each function.

The wireless door lock control system has the following functions:

HINT:

The default settings of the following functions are ON. Part of these functions can be customized (See page DL-103).

| Function | Operation |
|---|---|
| All door lock | Pressing the LOCK switch locks all doors. |
| All door unlock<br>(2-step unlock) | Pressing the UNLOCK switch twice within 3 seconds unlocks all the doors after the driver's door is unlocked. |
| Automatic lock | If none of the doors is opened within 60 seconds after they are unlocked by the wireless door lock control, all the doors will lock again automatically. |
| Panic alarm | Pressing the PANIC switch of the transmitter for longer than about 0.8 seconds causes the following alarms to activate:<br>• Sounds the horn and security horn.<br>• Flashes the hazard lights, headlights, and taillights.<br>• Illuminates the front interior light (when the switch is in the DOOR position).<br>While the panic alarm is operating, pressing any switch of the transmitter cancels the alarm operation. |
| Luggage compartment door opener | Pressing the LUGGAGE OPEN switch of the transmitter opens the luggage compartment door. |
| Answer back | • When the doors are locked by wireless operation, the wireless door lock buzzer sounds once and the hazard warning lights flash once.<br>• When the doors are unlocked by wireless operation, the wireless door lock buzzer sounds twice and the hazard warning lights flash twice.<br>• When the luggage compartment door is opened by wireless operation, the wireless door lock buzzer sounds once. |

| Function | Operation |
|---|---|
| Door ajar warning | The buzzer sounds when LOCK is pressed when any of the doors are ajar. When all the doors are closed or when UNLOCK is pressed, the buzzer will stop after it sounds for 10 seconds continuously. |
| Illuminated entry | When all the doors are locked, pressing UNLOCK causes the interior lights to come on simultaneously with the unlock operation. |
| Self-diagnostic mode | The following are ways to enter the self-diagnostic mode:<br>• If the door control receiver receives normal radio waves from the door control transmitter when the system is in diagnostic mode, it sounds the wireless door lock buzzer and flashes the interior light in a normal pattern that corresponds to the function of each switch.<br>• Read DTCs with the intelligent tester. |
| Transmitter recognition code registration | Enables the registration (writing and storing) of 6 types of transmitter recognition codes in the EEPROM that is contained in the door control receiver. |

### 4. TRANSMITTER RECOGNITION CODE REGISTRATION FUNCTION

The table below shows the 6 ID registration function modes by which up to 6 different codes can be registered. The codes are electronically registered (written and stored) in the EEPROM that is contained in the door control receiver.

| Mode | Function |
|---|---|
| Add mode | Adds a newly received code while preserving any previously registered codes.<br>This mode is used when adding a new transmitter. If the number of registered codes exceeds 6, the oldest registered code is erased first. |
| Rewrite mode | Erases all previously registered codes and registers only newly input codes. |
| Confirmation mode | Confirms how many codes are currently registered. When adding a new code, this mode is used to check how many codes already exist. |
| Prohibition mode | Deletes all the registered codes and disables the wireless door lock function.<br>This mode is used when the transmitter is lost. |

### 5. CONDITIONS THAT WIRELESS FUNCTIONS DO NOT OPERATE

(a) Lock operation is not available when:
- Any of the doors is open.
- The key is inserted in the ignition key cylinder.

(b) Unlock operation is not available when:
- The key is inserted in the ignition key cylinder.

(c) Luggage compartment door opener is not available when:
- The key is inserted in the ignition key cylinder.

# HOW TO PROCEED WITH TROUBLESHOOTING

HINT:
The wireless door lock control system troubleshooting procedures are based on the premise that the power door lock control system is operating normally. Check the power door lock control system first before troubleshooting the wireless door lock control system.
Use this procedure to troubleshoot the wireless door lock control system.

| 1 | VEHICLE BROUGHT TO WORKSHOP |
|---|---|

NEXT

| 2 | CUSTOMER PROBLEM ANALYSIS |
|---|---|

(a) Interview the customer to confirm the trouble (See page IN-45).

NEXT

| 3 | INSPECT COMMUNICATION FUNCTION OF CAN COMMUNICATION SYSTEM |
|---|---|

(a) Use the intelligent tester to check for normal function of the multiplex communication system.
  (1) (ECU unconnected, communication line malfunctioning) If no code is output, proceed to A.
  (2) (ECU unconnected, communication line malfunctioning) If any code is output, proceed to B.

B → **Go To CAN COMMUNICATION SECTION**

A

| 4 | DTC CHECK |
|---|---|

DL

(a) Check for a DTC and note any codes that are output.
(b) Delete the DTC.
(c) Recheck for DTCs. Try to prompt the DTC by simulating the original symptom that the DTC suggests.
  (1) If the DTC does not reoccur, proceed to A.
  (2) If the DTC reoccurs, proceed to B.

B → **Go To DTC chart**

A

| 5 | **SYMPTOM SIMULATION** |
|---|---|

**NEXT**

| 6 | **PROBLEM SYMPTOMS TABLE** |
|---|---|

(a) If the fault is not listed in the problem symptoms table, proceed to A.
(b) If the fault is listed in the problem symptoms table, proceed to B.

**B** → **Go to step 7**

**A**

| 7 | **PERFORM TROUBLESHOOTING ACCORDING TO MALFUNCTION SYMPTOM** |
|---|---|

(a) Terminals of ECU (See page DL-106)
(b) DATA LIST/ACTIVE TEST (See page DL-111)

**NEXT**

| 8 | **ADJUST, REPAIR OR REPLACE** |
|---|---|

**NEXT**

| 9 | **CONFIRMATION TEST** |
|---|---|

**NEXT**

**END**

# OPERATION CHECK

**1. FUNCTIONS AND OPERATING CONDITIONS**

(a) The wireless door LOCK/UNLOCK function:
This wireless door lock control function operates only when the following 4 conditions are met:
(1) There is no key in the ignition key cylinder.
(2) All the doors are closed.
(3) The power door lock system is functioning normally.
(4) The function is not disabled by customization.
HINT:
The UNLOCK function operates even when any of the doors are open.

(b) The wireless transmitter operational range differs depending on the situation.
(1) The operational range differs depending on the user, the way the transmitter is held and the location.
(2) In certain areas, the operational range will be reduced due to the vehicle body shape and the influence of the surrounding environment.
(3) Since the transmitter uses weak radio waves, the operational range may be reduced or the transmitter may not function if interference or stronger radio waves occur in the area where the transmitter is used.
(4) When the battery is low, the operational range is reduced and/or the transmitter may not function.
HINT:
If the transmitter has been left in a place that is exposed to direct sunlight, such as on the instrument panel, the battery may be weakened or other problems may occur.

**2. CHECK WIRELESS DOOR LOCK CONTROL FUNCTIONS**

HINT:
- The switches built into the door control transmitter send radio waves to the door lock control receiver.
- The operational range must be taken into account during checks.

(a) Establish conditions that allow the wireless control function to be operated successfully.

(b) Check the following basic functions.
(1) Check that the transmitter's LED lights up 3 times when each switch is pressed 3 times and that the LED blinks when each switch is pressed and held down.
HINT:
If the LED does not illuminate when the switch has been pressed 3 times or more, the battery may be depleted.
(2) Check that all the doors lock when the LOCK switch is pressed.

(3) Check that the driver's door unlocks when the UNLOCK switch is pressed once, and all the doors unlock when pressed twice within 3 seconds.

(c) Check the automatic lock function.

(1) Check that if the driver's door or all doors are unlocked with the UNLOCK switch and none of the doors are opened or locked within approximately 60 seconds, the doors automatically re-lock.

(2) Check that if the driver's door or all doors are unlocked with the UNLOCK switch and a door is opened or locked within approximately 60 seconds, the automatic lock function does not operate.

(d) Check the interior light ON function.

HINT:
Turn the interior light switch to the DOOR position before the check.

(1) Check that the interior light comes on simultaneously with the unlocking operation when the UNLOCK switch is pressed.

(2) Check that the interior light goes off in approximately 15 seconds if none of the doors is opened after the unlocking operation.

(e) Check the answer back function.

(1) When the doors are locked by wireless operation, the wireless door lock buzzer sounds once and the hazard warning lights flash once.

(2) When the doors are unlocked by wireless operation, the wireless door lock buzzer sounds twice and the hazard warning lights flash twice.

(3) When the luggage compartment door is opened by wireless operation, the wireless door lock buzzer sounds once.

(f) Check the switch operation fail-safe function.

(1) Check that the doors cannot be locked by operating a switch while the key is in the ignition key cylinder.

HINT:
This check cannot be made when the system is in recognition code registration mode.

(g) Check the chattering prevention function.

(1) Check that the corresponding operation occurs only once, and does not repeat itself while the switch is kept pressed. Check that the corresponding operation is carried out when the switch is operated repeatedly at 1-second intervals.

(h) Check the luggage compartment door opener function.

(1) Check that the luggage compartment door opens when the LUGGAGE OPEN switch is held down for 0.6 seconds or more.

(i) Check the door ajar warning function.
  (1) Check that the buzzer sounds when the LOCK switch is pressed when any of the doors are ajar. When all the doors are closed or when the UNLOCK switch is pressed, the buzzer will stop after it sounds for 10 seconds continuously.

(j) Check the panic alarm function.
  (1) Check that the following alarms operate when the PANIC switch is pressed longer than about 0.8 seconds:
    - The vehicle horns and the security horn sound.
    - The hazard warning lights, headlights and taillights flash.
    - The front interior light illuminates (when the switch is in the DOOR position).
  (2) Check that during the panic alarm is operating, pressing any switch of transmitter cancels the alarm operation.

# REGISTRATION

HINT:

- Register the recognition code when replacing the door control transmitter or the door control receiver.
- Add mode is used to register new recognition codes while still retaining codes already registered. This mode is used when a new transmitter is added. If the number of registered codes exceeds 6, the previously registered codes will be erased in order, starting from the first registered code.
- Rewrite mode is used to erase all the previously registered recognition codes in order to register all-new recognition codes. This mode is used when the transmitter or the door control receiver is replaced with a new one.
- Confirmation mode is used to confirm how many recognition codes have already been registered before another recognition code is registered.
- Prohibition mode is used to erase all the registered codes and disable the wireless door lock function.
  This mode is used when the transmitter is lost.
- All the following registration procedures must be performed in order.

**1. REGISTRATION OF RECOGNITION CODE (USING INTELLIGENT TESTER)**

(a) Turn the ignition switch ON.

(b) Select the add or rewrite mode according to the intelligent tester display.

(c) The number of registered codes is indicated.

(d) Registration of the door control transmitter.

(1) If the add mode or rewrite mode has been selected, press the LOCK and UNLOCK switches on the transmitter simultaneously.

(2) Within 3 seconds of releasing the LOCK and UNLOCK switches, press either of the switches on the door control transmitter.

**NOTICE:**

- **Do not press the LOCK and UNLOCK switches simultaneously for more than 1.5 seconds.**
- **Do the operation within 1 meter of the driver's seat to register the transmitter.**
- **Do not push other transmitter switches during the transmitter registration process.**

(3) The main body ECU automatically performs the power door LOCK-UNLOCK operation once and sounds the wireless door lock buzzer twice, in order to indicate whether registration has been completed correctly or not.

(4) If registration is continued, the next recognition code must be registered in the door control transmitter within 30 seconds.
HINT:
Up to 6 recognition codes can be registered.

(e) Completing the registration mode.

(1) The registration mode will cease when any of the following occurs:
- 30 seconds or more have elapsed after a code is registered.
- The intelligent tester is used to complete.
- The intelligent tester is disconnected.
- The ignition switch is turned off.

(f) Perform the following after registration is completed.

(1) Perform the wireless door lock control operation check (See page DL-99).
HINT:
If the wireless door lock control does not operate, perform the registration procedure again.

# CUSTOMIZE PARAMETERS

HINT:
The following items can be customized.

**NOTICE:**

- **When the customer requests a change in a function, first make sure that customization of the function(s) is possible.**
- **Be sure to record the current settings before customizing.**
- **When troubleshooting a function, first make sure that the function is not set to OFF.**

## WIRELESS DOOR LOCK CONTROL SYSTEM:

| Display (item) | Default | Function | Setting |
|---|---|---|---|
| WIRELESS OPER<br>(Wireless door lock control function) | ON | Function that turns wireless door lock function ON/OFF | ON/OFF |
| HAZARD ANS BACK<br>(Hazard answer-back for wireless door lock control) | ON | • When the doors are locked by wireless operation, the hazard warning lights flash once.<br>• When the doors are unlocked by wireless operation, the hazard warning lights flash twice. | ON/OFF |
| OPEN DOOR WARN<br>(Door ajar warning) | ON | The buzzer sounds when LOCK is pressed when any of the doors are ajar. | ON/OFF |
| AUTO LOCK DELAY<br>(Auto lock time) | 60 s | This function regulates the interval between unlocking and automatic relocking of doors. | 30 s/60 s |
| UNLOCK /2OPER<br>(Wireless unlock operated twice) | ON | This function unlocks the driver's door when the UNLOCK switch is pressed once, and unlocks all doors when pressed twice within 3 seconds.<br>If set to OFF, pressing UNLOCK once unlocks all doors. | ON/OFF |
| ALARM FUNCTION<br>(Panic function) | ON | This function operates the theft deterrent system when PANIC is pressed and held for 0.8 seconds. | ON/OFF |
| WIRLS BUZZ RESP<br>(Wireless buzzer answer-back) | ON | Wireless door lock buzzer response/ON or OFF | ON/OFF |
| TRUNK LID OPER<br>(Wireless trunk opener function setting) | 0.6 s ON | This function changes operation method of transmitter to open luggage compartment door.<br>1 TIME: Push 1 time<br>2 TIMES: Push 2 times<br>0.6 s PR: Push 0.6 seconds<br>OFF: Does not operate | 1 TIME/2 TIMES/0.6 s PR/ OFF |

# PROBLEM SYMPTOMS TABLE

If a normal system code is displayed during the DTC check, but the problem still occurs, check the circuits for each problem symptom in the order given in the table below and proceed to the relevant troubleshooting page.

HINT:

- The following is the troubleshooting procedure for the wireless door lock control of a vehicle without the smart key system.
- For the troubleshooting procedure for the wireless door lock control of a vehicle with the smart key system, refer to the wireless door lock control system (with Smart Key System).
- Inspect the fuse and relay before investigating the suspected areas shown in the table below.
- Inspect each malfunction circuit in numerical order for its corresponding symptom.

## WIRELESS DOOR LOCK CONTROL SYSTEM

| Symptom | Suspected area | See page |
|---|---|---|
| The wireless door lock control system does not operate. | 1. Perform the operation check | DL-99 |
| | 2. Door control transmitter | DL-216 |
| | 3. Enter the self-diagnostic mode | DL-109 |
| | 4. If the recognition code does not match the key code, check that the key code can be registered in the rewrite or add mode of the recognition code registration | - |
| | 5. Unlock warning switch circuit | DL-205 |
| | 6. Door courtesy switch circuit | LI-52 |
| | 7. Luggage compartment door courtesy switch circuit | DL-44 |
| | 8. If the symptoms still occur after the above areas have been inspected and proved to be normal, replace the main body ECU (Instrument Panel J/B) | - |
| The automatic lock function does not operate normally. | 1. Perform the operation check | DL-99 |
| | 2. Unlock warning switch circuit | DL-205 |
| | 3. Door courtesy switch circuit | LI-52 |
| | 4. If the symptoms still occur after the above areas have been inspected and proved to be normal, replace the main body ECU (Instrument Panel J/B) | - |
| The illuminated entry function only does not operate. | 1. Perform the operation check | DL-99 |
| | 2. Lighting system | LI-12 |
| | 3. If the symptoms still occur after the above area has been inspected and proved to be normal, replace the main body ECU (Instrument Panel J/B) | - |
| The answer back function does not operate (Wireless door lock buzzer). | 1. Perform the operation check | DL-99 |
| | 2. Wireless door lock buzzer circuit | DL-116 |
| | 3. If the symptoms still occur after the above area has been inspected and proved to be normal, replace the main body ECU (Instrument Panel J/B) | - |
| The answer back function does not operate (Hazard warning light). | 1. Perform the operation check | DL-99 |
| | 2. Wire harness | - |
| | 3. Turn signal flasher | LI-138 |
| | 4. If the symptoms still occur after the above areas have been inspected and proved to be normal, replace the main body ECU (Instrument Panel J/B) | - |

| Symptom | Suspected area | See page |
|---|---|---|
| The wireless trunk opener function only does not operate. | 1. Perform the operation check | DL-99 |
| | 2. Unlock warning switch circuit | DL-205 |
| | 3. Luggage compartment door courtesy switch circuit | DL-44 |
| | 4. If the symptoms still occur after the above areas have been inspected and proved to be normal, replace the main body ECU (Instrument Panel J/B) | - |
| The door ajar warning function only does not operate. | 1. Perform the operation check | DL-99 |
| | 2. Door courtesy circuit | LI-52 |
| | 3. If the symptom still occurs after the above areas have been inspected and proved to be normal, replace the main body ECU (Instrument Panel J/B) | - |
| The panic alarm function only does not operate. | 1. Perform the operation check | DL-99 |
| | 2. Door control transmitter | DL-216 |
| | 3. If the symptoms still occur after the above areas have been inspected and proved to be normal, replace the main body ECU (Instrument Panel J/B) | - |
| The panic alarm function does not operate (Vehicle horn). | 1. Perform the operation check | DL-99 |
| | 2. Horn circuit | TD-62 |
| | 3. If the symptom still occurs after the above areas have been inspected and proved to be normal, replace the main body ECU (Instrument Panel J/B) | - |
| The panic alarm function does not operate (Security horn). | 1. Perform the operation check | DL-99 |
| | 2. Security horn circuit | TD-64 |
| | 3. If the symptom still occurs after the above areas have been inspected and proved to be normal, replace the main body ECU (Instrument Panel J/B) | - |
| The panic alarm function does not operate (Hazard warning light). | 1. Perform the operation check | DL-99 |
| | 2. Wire harness | - |
| | 3. Turn signal flasher | LI-138 |
| | 4. If the symptom still occurs after the above areas have been inspected and proved to be normal, replace the main body ECU (Instrument Panel J/B) | - |
| The panic alarm function does not operate (Headlight, taillight or interior light). | 1. Perform the operation check | DL-99 |
| | 2. Lighting system | LI-12 |
| | 3. If the symptom still occurs after the above areas have been inspected and proved to be normal, replace the main body ECU (Instrument Panel J/B) | - |

# TERMINALS OF ECU

**1. CHECK MAIN BODY ECU (INSTRUMENT PANEL J/B)**

(a) Disconnect the main body ECU (instrument panel J/B) connectors.

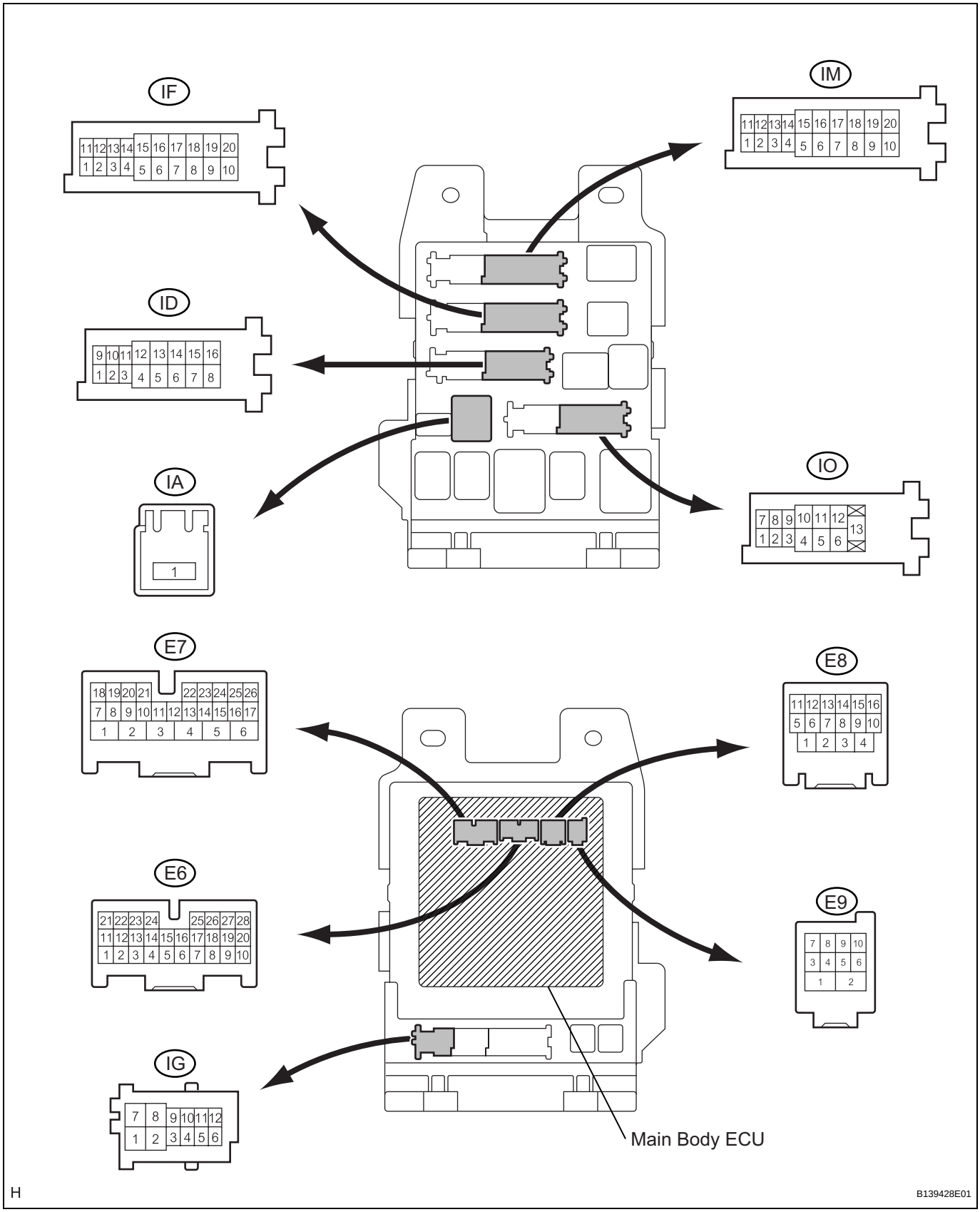

(b) Measure the resistance and voltage between each terminal of the wire harness side connectors and body ground.

| Symbols (Terminal No.) | Wiring Color | Terminal Description | Condition | Specified Condition |
|---|---|---|---|---|
| RCTY (E6-5) - Body ground | GR - Body ground | Rear courtesy light switch RH input | Rear door RH CLOSED (OFF) → OPEN (ON) | 10 kΩ or higher → Below 1 Ω |
| PCTY (E6-21) - Body ground | Y - Body ground | Passenger side courtesy light switch input | Passenger side door CLOSED (OFF) → OPEN (ON) | 10 kΩ or higher → Below 1 Ω |
| LGCY (E6-25) - Body ground | W - Body ground | Luggage compartment door courtesy light switch input | Luggage compartment door CLOSED (OFF) → OPEN (ON) | 10 kΩ or higher → Below 1 Ω |
| DCTY (E7-24) - Body ground | L - Body ground | Driver side door courtesy light switch input | Driver side door CLOSED (OFF) → OPEN (ON) | 10 kΩ or higher → Below 1 Ω |
| KSW (E9-5) - Body ground | L - Body ground | Unlock warning switch input | No key in ignition key cylinder (OFF) → Key inserted (ON) | 10 kΩ or higher → Below 1 Ω |
| ACC (IA-1) - Body ground | B - Body ground | Ignition power supply (ACC signal) | Ignition switch ACC → OFF | 10 to 14 V → Below 1 V |
| IG (IA-1) - Body ground | B - Body ground | Ignition power supply (IG signal) | Ignition switch ON → OFF | 10 to 14 V → Below 1 V |
| ALTB (ID-16) - Body ground | W - Body ground | +B (power system alternator system) power supply | Always | 10 to 14 V |
| GND1 (IF-10) - Body ground | W-B - Body ground | Ground | Always | Below 1 Ω |
| BECU (ID-10) - Body ground | O - Body ground | +B power supply | Always | 10 to 14 V |
| GND2 (IM-9) - Body ground | W-B - Body ground | Ground | Always | Below 1 Ω |
| LCTY (IO-7) - Body ground | LG - Body ground | Rear courtesy light switch LH input | Rear door LH CLOSED (OFF) → OPEN (ON) | 10 kΩ or higher → Below 1 Ω |

If the result is not as specified, there may be a malfunction on the wire harness side.

(c) Reconnect the main body ECU (instrument panel J/B) connectors.

(d) Measure the voltage between each terminal of the wire harness side connectors and body ground.

| Symbols (Terminal No.) | Wiring Color | Terminal Description | Condition | Specified Condition |
|---|---|---|---|---|
| TR+ (E7-1) - Body ground | B - Body ground | Luggage compartment door opener motor input | Luggage compartment door CLOSED (LOCKED) → OPEN (UNLOCKED) | Below 1 V → 10 to 14 V*1 |
| HAZ (E8-4) - Body ground | W - Body ground | Turn signal flasher relay signal | Any transmitter switch is pressed → not pressed | Below 1 V → 10 to 14 V*2 |
| BZR (E9-7) - Body ground | O - Body ground | Wireless door lock buzzer | Wireless door lock buzzer OFF → ON | 0 V → Pulse generation |

HINT:

- *1: When operating the motor.
- *2: When operating the answer back function.

# DIAGNOSIS SYSTEM

## 1. DESCRIPTION

The main body ECU stores trouble codes when trouble occurs on the vehicle.
The diagnostic system allows for reading of the trouble codes from the DLC3.
Use the intelligent tester to check and solve the problem.

## 2. CHECK DLC3

(a) The main body ECU uses ISO 15765-4 for communication protocol. The terminal arrangement of the DLC3 complies with SAE J1962 and matches the ISO 15765-4 format.

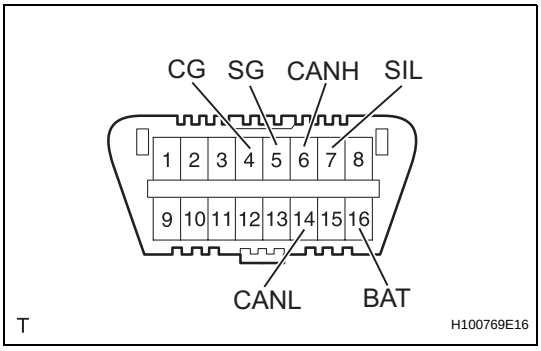


| Symbols (Terminal No.) | Terminal Description | Condition | Specified condition |
|---|---|---|---|
| SIL (7) - SG (5) | Bus "+" line | During transmission | Pulse generation |
| CG (4) - Body ground | Chassis ground | Always | Below 1 Ω |
| SG (5) - Body ground | Signal ground | Always | Below 1 Ω |
| BAT (16) - Body ground | Battery positive | Always | 10 to 14 V |
| CANH (6) - CANL (14) | CAN bus line | Ignition switch OFF* | 54 to 67 Ω |
| CANH (6) - CG (4) | HIGH-level CAN bus line | Ignition switch OFF* | 200 Ω or higher |
| CANL (14) - CG (4) | LOW-level CAN bus line | Ignition switch OFF* | 200 Ω or higher |
| CANH (6) - BAT (16) | HIGH-level CAN bus line | Ignition switch OFF* | 6 kΩ or higher |
| CANL (14) - BAT (16) | LOW-level CAN bus line | Ignition switch OFF* | 6 kΩ or higher |

**NOTICE:**
***: Before measuring the resistance, leave the vehicle as is for at least 1 minute and do not operate the ignition switch, any other switches or the doors.**
If the result is not as specified, the DLC3 may have a malfunction. Repair or replace the harness and connector.

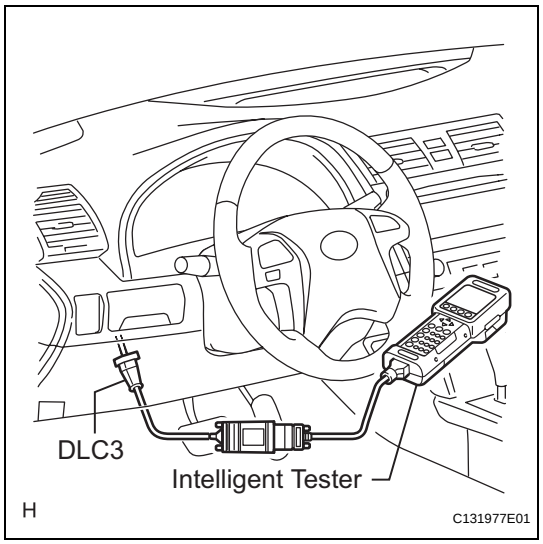


(b) Connect the cable of the intelligent tester (with CAN VIM) to the DLC3, turn the ignition switch ON and attempt to use the intelligent tester. If the screen displays a communication error message, a problem exists in the vehicle or in the tester.
- If communication is normal when the tool is connected to another vehicle, inspect the DLC3 on the original vehicle.
- If communication is still impossible when the tool is connected to another vehicle, the problem is probably in the tool itself. Consult the Service Department listed in the tool's instruction manual.

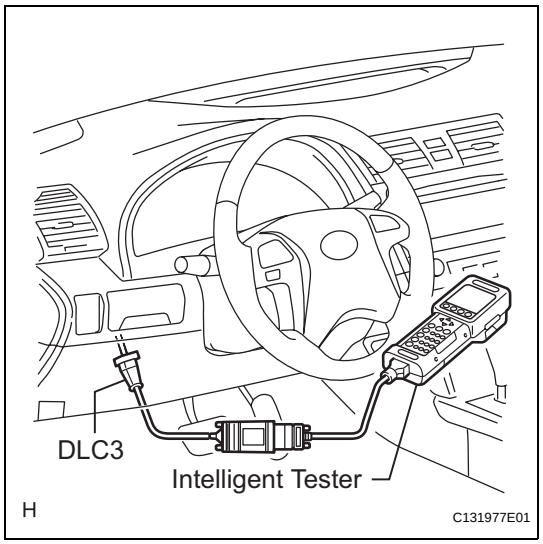


# DTC CHECK / CLEAR

**1. DTC CHECK/CLEAR (USING INTELLIGENT TESTER)**

(a) DTC check
(1) Connect the intelligent tester to the DLC3.
(2) Turn the ignition switch ON.
(3) Read DTCs on the tester screen.

(b) DTC clear
(1) Connect the intelligent tester to the DLC3.
(2) Turn the ignition switch ON.
(3) Clear the DTCs following the prompts on the tester screen.
HINT:
The intelligent tester has a SNAPSHOT function which records the monitored data.
Refer to the intelligent tester operator's manual for further details.

**2. SELF-DIAGNOSTIC MODE (OPERATING IGNITION KEY CYLINDER)**

(a) Switch to self-diagnostic mode.
(1) Establish the vehicle's initial conditions (See page DL-99).
(2) Insert the key into the ignition key cylinder and remove it.
(3) Within 5 seconds after the key is removed, insert it into the ignition key cylinder and then turn the ignition switch ON then OFF 1 time (End in OFF).
(4) Within 30 seconds of turning the ignition switch OFF, perform the following 9 times: Turn the ignition switch ON then OFF (End in OFF).
HINT:
- Turning the ignition switch ON after the procedure above has been completed will end the self-diagnostic mode.
- Do not lock or unlock doors while performing the self-diagnostic mode.

**NOTICE:**
**If the system fails to enter the self-diagnostic mode, the system will return to normal mode.**

(b) Check that the system has switched to self-diagnostic mode by checking the sound of the wireless door lock buzzer.

(c) Check the diagnostic outputs when the door control transmitter switch is held down. The diagnostic outputs can be checked by the sound of the wireless door lock buzzer.

**Timing Chart**

**Buzzer Output:**

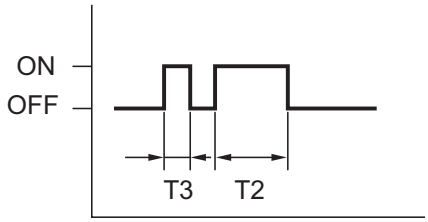


T1: 0.25 seconds

T2: 0.5 seconds

T3: 0.13 seconds

B144376E01

**Buzzer Output:**

Normal Wave

(LOCK/UNLOCK or LUGGAGE OPEN Switch):

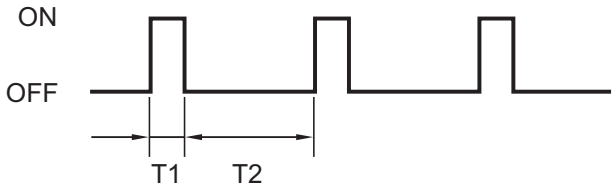


Unmatching Recognition Code:

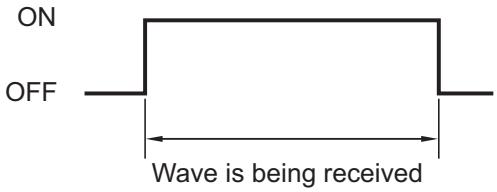


No Diagnosis Output:

T1: 0.13 seconds

T2: 0.5 seconds

N

B113635E02

**3. SELF-DIAGNOSTIC MODE (USING INTELLIGENT TESTER)**

(a) Switch to self-diagnostic mode.

(1) Connect the intelligent tester to the DLC3.

DL

(2) Turn the ignition switch ON and turn the intelligent tester main switch on.
HINT:
Refer to the intelligent tester operator's manual for further details.

# DATA LIST / ACTIVE TEST

## 1. DATA LIST

HINT:
Using the intelligent tester DATA LIST allows switch, sensor, actuator and other item values to be read without removing any parts. Reading the DATA LIST early in troubleshooting is one way to shorten labor time.

(a) Connect the intelligent tester (with CAN VIM) to the DLC3.
(b) Turn the ignition switch ON.
(c) Enter the following menus: DIAGNOSIS / OBD/ MOBD / BODY / DATA LIST.
(d) Read the DATA LIST according to the display on the tester.

**BODY (Main body ECU RH):**

| Item | Measurement Item/Display (Range) | Normal Condition | Diagnostic Note |
|---|---|---|---|
| WIRELESS OPER | Wireless door lock control function / ON or OFF | ON: Operating<br>OFF: Not operating | - |
| HAZARD ANS BACK | Hazard answer-back of wireless / ON or OFF | ON: Operating<br>OFF: Not operating | - |
| OPEN DOOR WARN | Open door warning / ON or OFF | ON: Operating<br>OFF: Not operating | - |
| AUTO LOCK DELAY | Automatic lock time / 60 s or 30 s | 60 s: 60 seconds<br>30 s: 30 seconds | - |
| UNLOCK /2OPER | 2 times operation of wireless unlock / ON or OFF | ON: All doors unlock when UNLOCK is pressed twice<br>OFF: All doors unlock when UNLOCK is pressed once | - |
| ALARM FUNCTION | Panic function / ON or OFF | ON: Operating<br>OFF: Not operating | - |
| WIRLS BUZZ RESP | Wireless door lock buzzer response / ON or OFF | ON: Operating<br>OFF: Not operating | - |
| TRUNK LID OPER | Luggage compartment door open function type / 1 TIME/2 TIME/ 0.6 s PR/ OFF | 1 TIME: Luggage compartment door opens when LUGGAGE OPEN switch is pressed once<br>2 TIME: Luggage compartment door opens when LUGGAGE OPEN switch is pressed twice<br>0.6 s PR: Luggage compartment door opens when LUGGAGE OPEN switch is pressed and held down for 0.6 seconds.<br>OFF: Not operating | - |

## 2. ACTIVE TEST

HINT:
Performing the intelligent tester ACTIVE TEST allows relay, VSV, actuator and other items to be operated without removing any parts. Performing the ACTIVE TEST early in troubleshooting is one way to shorten the labor time. The DATA LIST can be displayed during the ACTIVE TEST.

(a) Connect the intelligent tester (with CAN VIM) to the DLC3.
(b) Turn the ignition switch ON.
(c) Enter the following menus: DIAGNOSIS / OBD/ MOBD / BODY / ACTIVE TEST.
(d) Perform the ACTIVE TEST according to the display on the tester.

**BODY (Main body ECU RH):**

| Item | Tester Detail | Diagnostic Note |
|---|---|---|
| BUZZ RESP SOUND | Wireless door lock buzzer ON / OFF | - |

| Item | Tester Detail | Diagnostic Note |
|---|---|---|
| HAZARD | Turns the turn signal flasher relay ON / OFF | Observe headlight and rear combination light for correct operation |
| VEHICLE HORN | Vehicle horn ON / OFF | - |
| TRUNK/BDOR OPEN | Turns luggage compartment door opener motor ON / OFF | Observe luggage compartment door |

# DIAGNOSTIC TROUBLE CODE CHART

HINT:
If a trouble code is displayed during the DTC check, inspect the trouble areas listed for that code. For details of the code, refer to "See Page" in the DTC chart.

- The following is the troubleshooting procedure for the wireless door lock control of a vehicle without the smart key system.
  For the troubleshooting procedure for the wireless door lock control of a vehicle with the entry and start system, refer to the wireless door lock control system (with Smart Key System).
- Inspect the fuse and relay before investigating the trouble areas shown in the table below.

**WIRELESS DOOR LOCK CONTROL SYSTEM:**

| DTC No. | Detection Item | Trouble Area | See page |
|---|---|---|---|
| B1242 | Wireless Door Lock Tuner Circuit Malfunction | 1. Wire harness<br>2. Door control receiver<br>3. Main body ECU | DL-113 |

| DTC | B1242 | Wireless Door Lock Tuner Circuit Malfunction |
|---|---|---|

## DESCRIPTION

The door control receiver receives signals from the transmitter and sends these signals to the main body ECU.

| DTC No. | DTC Detection Condition | Trouble Area |
|---|---|---|
| B1242 | In diagnostic mode, an applicable RDA signal cannot be received within 1 second after an PRG signal has been output from the main body ECU. | • Wire harness<br>• Door control receiver<br>• Main body ECU (Instrument panel J/B) |

## WIRING DIAGRAM

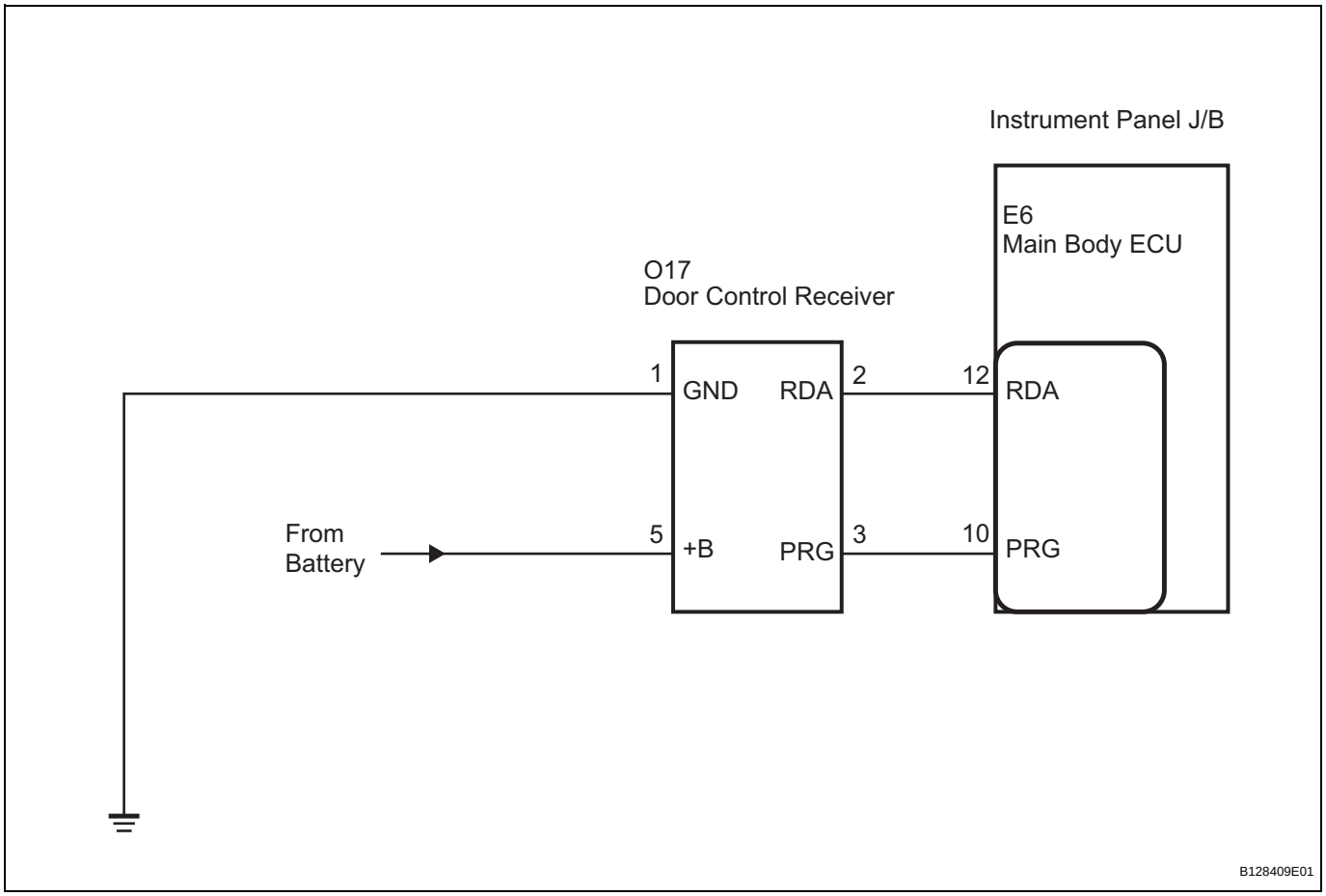

## INSPECTION PROCEDURE

### 1 CHECK HARNESS AND CONNECTOR (MAIN BODY ECU - DOOR CONTROL RECEIVER)

**Connector Wire Harness Side:**

Main Body ECU

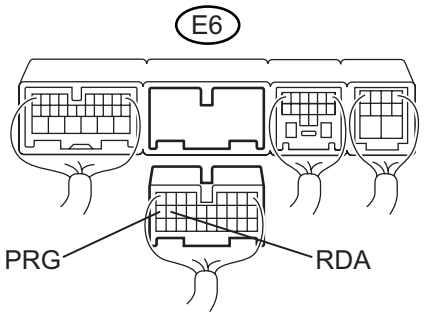


Door Control Receiver

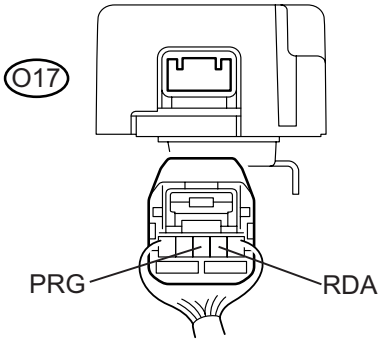


B139427E01

(a) Disconnect the E6 main body ECU connector and the O17 door control receiver connector.

(b) Measure the resistance according to the value(s) in the table below.

**Standard resistance**

| Symbol (Tester Connection) | Condition | Specified Condition |
|---|---|---|
| RDA (E6-12) - RDA (O17-2) | Always | Below 1 Ω |
| RDA (E6-12) - Body ground | Always | 10 kΩ or higher |
| PRG (E6-10) - PRG (O17-3) | Always | Below 1 Ω |
| PRG (E6-10) - Body ground | Always | 10 kΩ or higher |

**NG** → **REPAIR OR REPLACE HARNESS OR CONNECTOR**

**OK**

### 2 CHECK HARNESS AND CONNECTOR (BATTERY, BODY GROUND)

**Connector Wire Harness View:**

Door Control Receiver

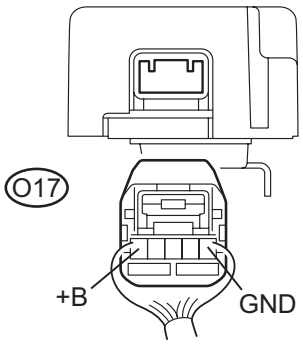


N

B113637E02

(a) Measure the voltage and resistance according to the value(s) in the table below.

**Standard**

| Symbol (Tester Connection) | Condition | Specified Condition |
|---|---|---|
| GND (O17-1) - Body ground | Always | Below 1 Ω |
| +B (O17-5) - Body ground | Always | 10 - 14 V |

**NG** → **REPAIR OR REPLACE HARNESS OR CONNECTOR**

OK

| 3 | REPLACE DOOR CONTROL RECEIVER |
|---|---|

(a) Reconnect the E6 main body ECU connector.
(b) Replace the door control receiver with a normal one.
(c) Perform the registration procedures (See page DL-101).
HINT:
If a normally functioning door control receiver is available, connect it and check if the wireless door lock function is normal or DTCs are output. If the alternative receiver functions normally, replace the original door control receiver.

NEXT

| 4 | CONFIRM DTC |
|---|---|

(a) Clear the DTCs (See page DL-109).
(b) Check if the same DTC is detected.
HINT:
Reinstall the sensors, connectors, etc. and restore the previous vehicle conditions before rechecking for DTCs.

**Result**

| Result | Proceed To |
|---|---|
| DTC is output | A |
| DTC is not output (When troubleshooting in accordance with the DTC CHART) | B |
| DTC is not output (When troubleshooting in accordance with the PROBLEM SYMPTOMS TABLE) | C |

B → END

C → PROCEED TO NEXT CIRCUIT INSPECTION SHOWN IN PROBLEM SYMPTOMS TABLE

A

REPLACE MAIN BODY ECU (INSTRUMENT PANEL JUNCTION BLOCK)

# Wireless Door Lock Buzzer Circuit

## DESCRIPTION

The main body ECU RH activates the wireless door lock buzzer when detecting a lock/unlock signal from the door control transmitter.

## WIRING DIAGRAM

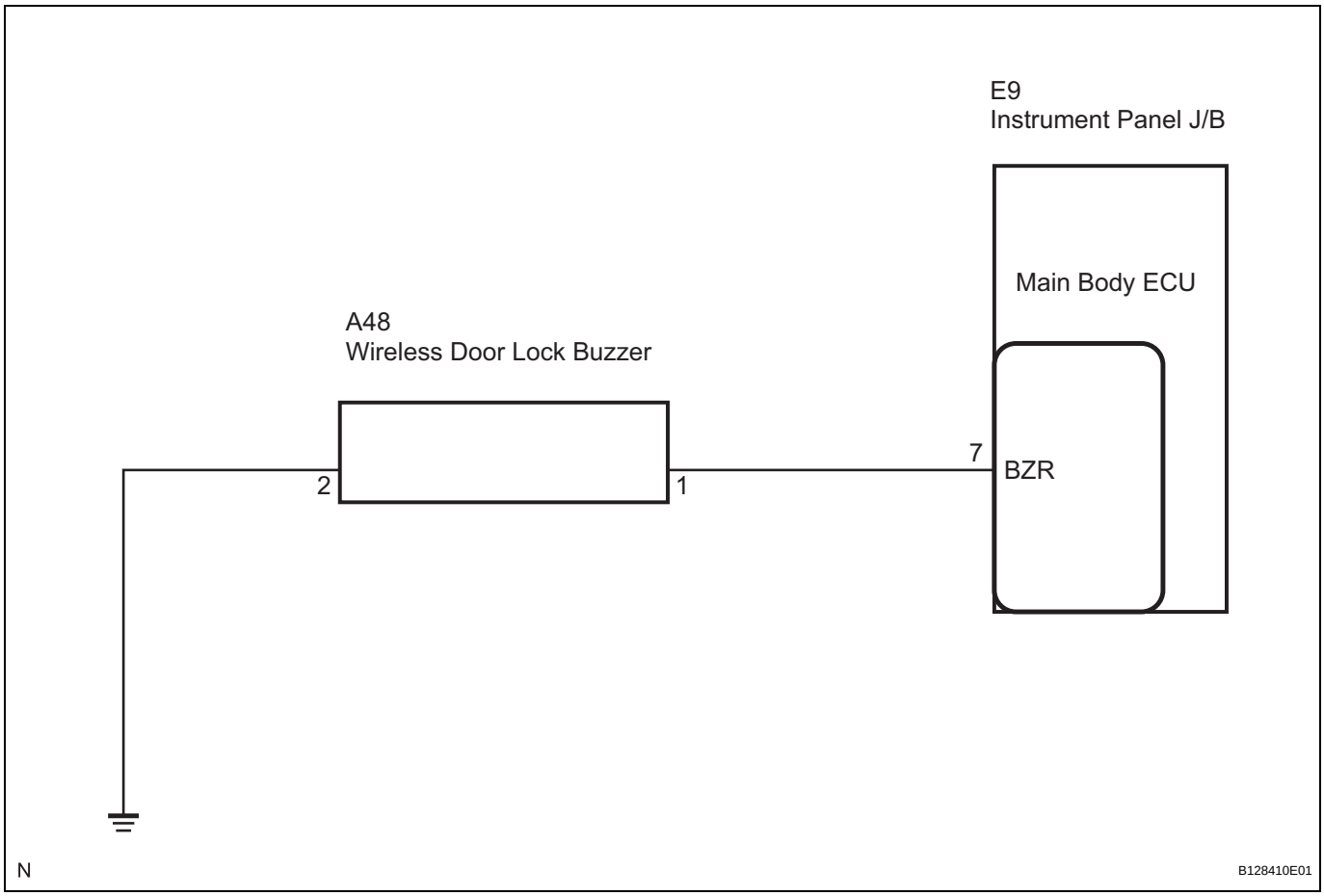

## INSPECTION PROCEDURE

### 1 INSPECT WIRELESS DOOR LOCK BUZZER

**Wireless Door Lock Buzzer:**

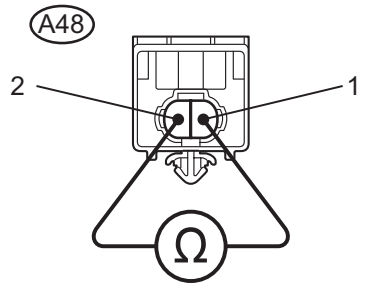


N B144393E01

(a) Disconnect the A48 wireless door lock buzzer connector.
(b) Measure the resistance according to the value(s) in the table below.
HINT:
The buzzer activation circuit is built into the ECU, not into the buzzer itself. When battery voltage is applied directly to the buzzer, the buzzer will not sound.

**Standard resistance**

| Tester Connection | Condition | Specified Condition |
|---|---|---|
| A48-1 - A48-2 | Always | Approx. 1 kΩ |

**NG** → **REPLACE WIRELESS DOOR LOCK BUZZER**

**OK**

### 2 CHECK HARNESS AND CONNECTOR (MAIN BODY ECU - WIRELESS DOOR LOCK BUZZER - BODY GROUND)

**Connector Wire Harness View:**

Main Body ECU

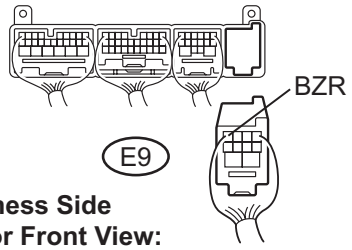


**Wire Harness Side Connector Front View:**

Wireless Door Lock Buzzer

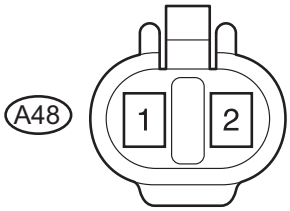


N B113633E03

(a) Disconnect the E9 main body ECU connector.
(b) Measure the resistance according to the value(s) in the table below.

**Standard resistance**

| Symbol (Tester Connection) | Condition | Specified Condition |
|---|---|---|
| BZR (E9-7) - A48-1 | Always | Below 1 Ω |
| BZR (E9-7) - Body ground | Always | 10 kΩ or higher |
| A48-1 - Body ground | Always | 10 kΩ or higher |
| A48-2 - Body ground | Always | Below 1 Ω |

**NG** → **REPAIR OR REPLACE HARNESS OR CONNECTOR**

**OK**

**PROCEED TO NEXT CIRCUIT INSPECTION SHOWN IN PROBLEM SYMPTOMS TABLE**

# SMART KEY SYSTEM

## PRECAUTION

**1. PRECAUTIONS WHEN USING INTELLIGENT TESTER**

(a) When troubleshooting the smart key system using the intelligent tester with the engine switch off, connect the intelligent tester to the vehicle and repeat turning any of the courtesy light switches on and off until communication between the tester and the vehicle begins (the interval between ON and OFF should be less than 1.5 seconds).

(b) After DTCs are all cleared, check if the trouble occurs again 6 seconds after the engine switch is turned on (IG).

**2. PRECAUTIONS FOR EACH FUNCTION**

(a) Precautions for the electrical key:
The electrical key is a precision instrument. Be sure to observe the following:

(1) Do not drop or strike the electrical key.

(2) Do not keep the electrical key in a high temperature area for a long time.

(3) Do not use an ultrasonic washing machine to clean the electrical key.

(4) Keep the electrical key away from magnets or magnetized items during use.

(5) Do not attach any stickers to the electrical key.

(6) If an electrical key is lost, delete all registered electrical key ID codes and then reregister the remaining electrical keys.

(b) Precautions for the entry unlock function:

(1) As the sensor is built into the backside of the outside door handle, the user must touch the backside of the handle when performing the unlock function.

(2) If touched with gloved hands, the response of the door may be delayed.

(3) During the entry unlock operation, if the door handle is pulled before the door unlocks, the unlock function cannot be completed. Confirm that the door has been unlocked before pulling the door handle to open the door.

(4) Make sure that the doors are unlocked when touching the touch sensor on the outside door handle while the electrical key is being carried.
If the doors cannot be unlocked, the certification ECU orders the main body ECU to perform the door unlock operation 4 times at intervals of 0.75 seconds.
At this time, the door may not be unlocked because the handle is being pulled due to some mechanical reasons.
Be sure to return the door handle to its original position.
If the door cannot be opened by pulling the handle, perform the entry unlock operation again.

(5) If the electrical key is too close to the oscillator on the outside of the vehicle, the door may not be unlocked because the electrical key cannot react to the strong wave output from the transmitter.

(6) If the electrical key is within the vehicle exterior detection area, the door can be unlocked even when a person other than the person carrying the electrical key holds the door handle.
However, the doors other than the door that the codes match will not be unlocked.
(If the electrical key is within the driver side door's detection area outside the vehicle, the doors will be unlocked when the person carrying the electrical key holds the driver side door handle. However, if any door handle other than that of the driver side door is held, the doors will not be unlocked).

(7) If a door is not opened after the door unlock operation, the doors automatically lock after approximately 30 seconds.

(8) If a large amount of water is applied to the door handle due to a car wash or heavy rain, the electrical key being within the vehicle exterior detection area may cause the doors to be unlocked.
However, the doors will be locked again after approximately 30 seconds if a door is not opened.

(9) If the electrical key of the smart key system is used while it is being carried with the electrical key of another smart key system, the time before the entry unlock operation will become longer than usual. This is not a malfunction.

(c) Precautions for the entry lock function:

(1) When performing the entry lock operation, firmly press the lock switch on the outside door handle. If pressed too quickly or lightly, the entry lock may not operate.

(2) It is possible that signals output from the indoor electrical key antenna may leak through the window. Also, if the electrical key is too close to a door oscillator, the oscillator output signals are too strong and the electrical key cannot respond. As a result, when the electrical key is near the vehicle interior (window, door handle), the entry lock function may not operate. Also, the electrical key reminder warning buzzer may sound and the entry unlock operation may stop functioning. In this situation, move the electrical key away from the vehicle interior (window, door handle), perform the entry lock operation and perform the entry unlock operation.

(3) Do not touch the lock switch while opening or closing the door.
If the lock switch is pressed when opening or closing the door while the electrical key is being carried, the door ajar warning buzzer sounds (beeps outside the vehicle for 10 seconds).

(4) If the electrical key is on the instrument panel, rear package tray, floor, or in the glove box, the electrical key reminder function may not operate and the electrical key may be locked in the vehicle. Always carry the electrical key.

(5) If the electrical key is outside the vehicle but is very close to a window or door handle (the ECU determines that the electrical key is inside the vehicle) and the transmitter or mechanical key is used to lock the doors (entry lock is not used), entry unlock will not operate. To unlock the doors, perform a wireless door unlock operation. The entry lock function operates in this way to prevent the user from unintentionally unlocking the doors from outside the vehicle. For example, when a user operates the wireless door lock operation from inside the vehicle, radio waves from a door oscillator may leak into the vehicle interior and the doors may unlock.

(6) To allow the user enough time to check if the doors are locked after performing a door lock operation (entry lock function or wireless door lock operation), the entry unlock function will not be permitted for 3 seconds after the door lock operation.

(d) Precautions for the entry ignition function:

(1) To start the engine, first depress the brake pedal firmly until the engine switch indicator illuminates green.

(2) When operating the engine switch, firmly press the switch. If the switch is pressed too quickly, power source control and engine starting may not operate.

(3) While driving the vehicle, continuously pressing the engine switch for 3 seconds or more will turn off the engine. Do not touch the engine switch while driving, except in an emergency.
(4) Do not touch the engine switch with oily hands.
(5) If the vehicle has been in a high temperature location for an extended period of time, be careful when touching the engine switch. It may be very hot and lead to burns.
(6) Take care to avoid spilling beverages on the engine switch. Keep all liquids away from the engine switch.
(7) Do not use the engine switch if it seems to be sticking or feels abnormal.
(8) The vehicle continually records the power source mode (off, on (ACC), on (IG), start). When the battery cable is disconnected and reconnected, the power source mode will return to the mode that was selected before disconnecting the battery cable. Always turn the power off before disconnecting the battery cable. When the vehicle battery is fully depleted, power will be cut. As a result, the power source mode before the power was cut cannot be recognized, so be extremely careful.
(9) Do not connect any electronic products to the ACC, IG1 or IG2 coil side wiring, as the vehicle power supply may be unable to be turned on, or other problems may occur.
(10) After the battery cable has been disconnected and reconnected, the engine will not start on the first attempt. The engine will start normally on the second attempt.
(11) When starting the engine immediately after reconnecting the battery cable, connect the cable and wait at least 10 seconds before attempting to start the engine. The engine may not start when attempting an engine start immediately after disconnecting and reconnecting the battery cable.
(12) If the electrical key is held over the engine switch to start the engine because the electrical key battery is depleted, the following warnings will sound:
- Driver's door open → closed:
  - An exit warning if the shift lever is in a position other than P and the power source is in a mode other than off.
  - An exit warning if the shift lever is in the P position and the power source is in a mode other than off.
- Doors other than the driver door open → closed:

Warning to inform that the electrical key has been taken out of the vehicle.

These warnings will sound because whether the electrical key is in the cabin or not cannot be determined. They do not indicate system malfunctions.

(e) Precautions for luggage compartment door entry function:
Even if the electrical key is within the electrical key oscillator (outside luggage compartment) detection area, the luggage compartment door cannot be opened if the electrical key is in the following areas:
- Near the center of the bumper
- Too close to the ground or in a high place

(f) Precautions for the function to prevent electrical key confinement in the luggage compartment:
(1) Do not place the electrical key in the luggage compartment.
If the luggage compartment is closed with the electrical key in it when all the doors are locked, the alarm to indicate electrical key confinement will operate (beeping sound for 2 seconds outside of the vehicle). However, the alarm may not operate for some reason relating to the electrical key location (near the spare tire or the side of the luggage compartment), the electrical key condition (covered with metal or near metal), or ambient radio waves.
(2) If the luggage compartment is closed with the electrical key in it when any of the doors is unlocked or open, the electrical key confinement prevention function will not operate. In this case, use the luggage compartment opener in the cabin to open the luggage compartment and take out the electrical key.
(3) The alarm may erroneously operate in the following conditions. If you can confirm that you are carrying the electrical key or that the electrical key is in the cabin, there is no problem. The entry luggage compartment open function may not operate if the alarm erroneously operates. In this case, use the luggage compartment opener in the cabin or perform a wireless operation to open the luggage compartment.
- The electrical key is brought into the cabin after the luggage compartment is opened, and then the luggage compartment is closed.
- The luggage compartment is closed by the person who is carrying the electrical key.

(4) If the alarm operates when the luggage compartment is closed with all the doors locked, the electrical key is in the cabin or luggage compartment. Check the cabin and luggage compartment to find the electrical key.

(5) If the luggage compartment is closed with the electrical key in it when all the doors are locked, the alarm will sound and the luggage compartment can be opened. This may increase the risk of the vehicle being stolen.

(6) Do not open or close the luggage compartment after all the doors are locked if you want to keep the spare electrical keys in the cabin. As a result, the alarm may sound and the luggage compartment can be opened. This may increase the risk of the vehicle being stolen.

(g) Precautions for the battery built into the electrical key and the vehicle battery:

(1) The electrical key is constantly checking for signals from the vehicle, which requires power from the electrical key's built-in battery. The life of the battery is approximately 1 to 2 years depending on the usage conditions. Be sure to replace the battery when its power is low. When replacing the battery, do not touch the inner circuit board or other inner parts.

(2) The electrical key is constantly checking for signals from the vehicle using battery power to determine whether the electrical key is being used or not. Even if the user is carrying 2 electrical keys and only 1 electrical key is used, both electrical keys will consume battery power.

(3) The electrical key receives radio waves at approximately 314 MHz. If the electrical key continuously receives strong, identical frequency waves, this may drain the electrical key's battery. Store the electrical key at least 1 m (3.3 ft) from TVs, personal computers, or other electrical products.

(4) When a door is being locked, the vehicle battery is used to transmit radio waves. The battery may be dead if the vehicle remains stopped for a long time. If the vehicle is not used for a long time, remove the battery from the vehicle or cancel the smart key system.

(5) When a door is being locked with the electrical key in the detection area of a door oscillator, the battery is used for regular communication between the electrical key and vehicle. If the vehicle is not used, keep the electrical key away from the vehicle (more than 2 m (6.6 ft)).

(6) After disconnecting and reconnecting the battery cable, the entry unlock function may not operate. If this occurs, perform a wireless door unlock and lock operation.

(h) Precautions for the entry unlock mode switching function:

(1) Perform the entry unlock mode switching function within a 1 m (3.3 ft) area around the vehicle.

(2) The entry unlock mode switching function cannot be performed within 5 seconds of the previous mode change. Wait 5 seconds or more before performing a mode change.

# PARTS LOCATION

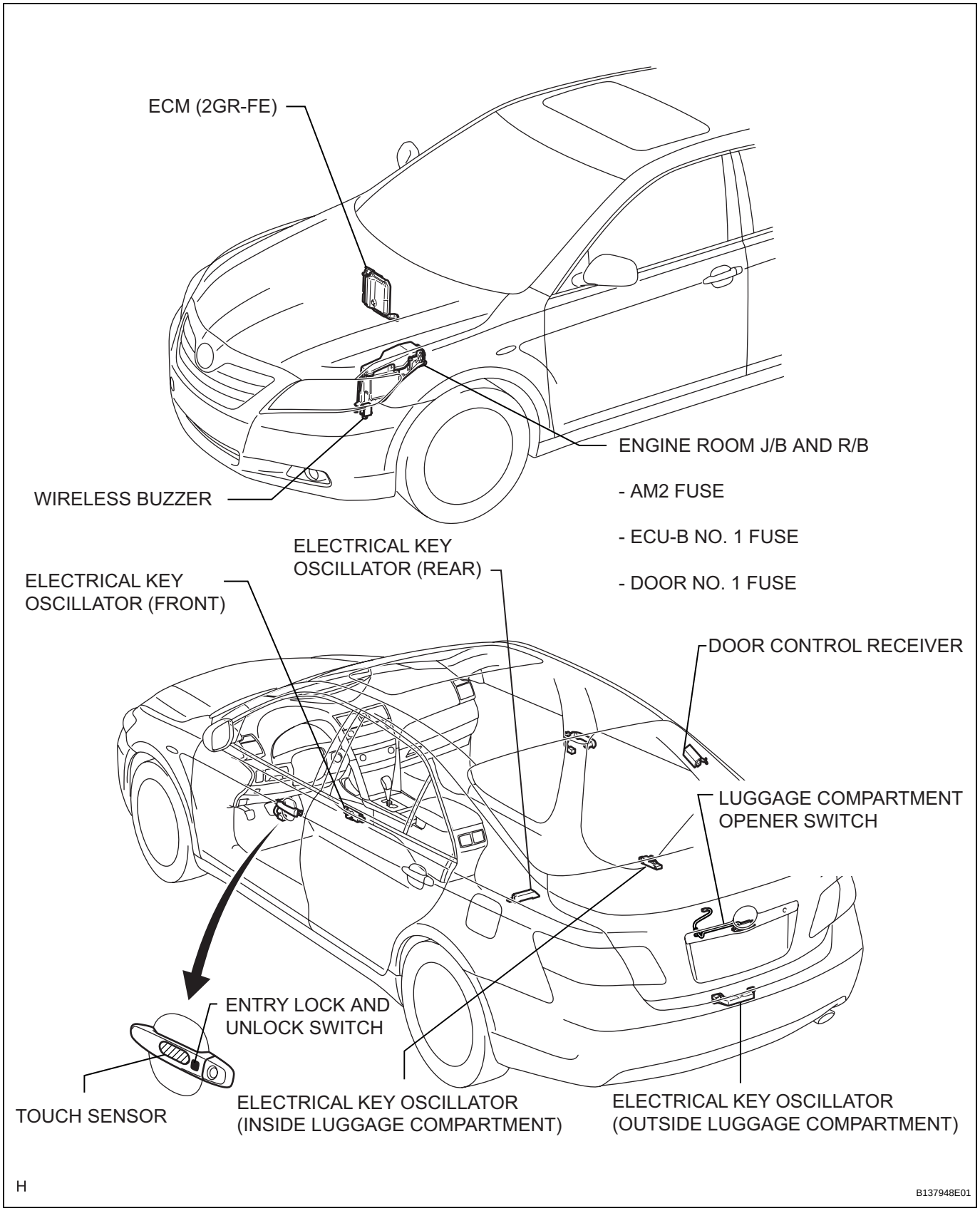

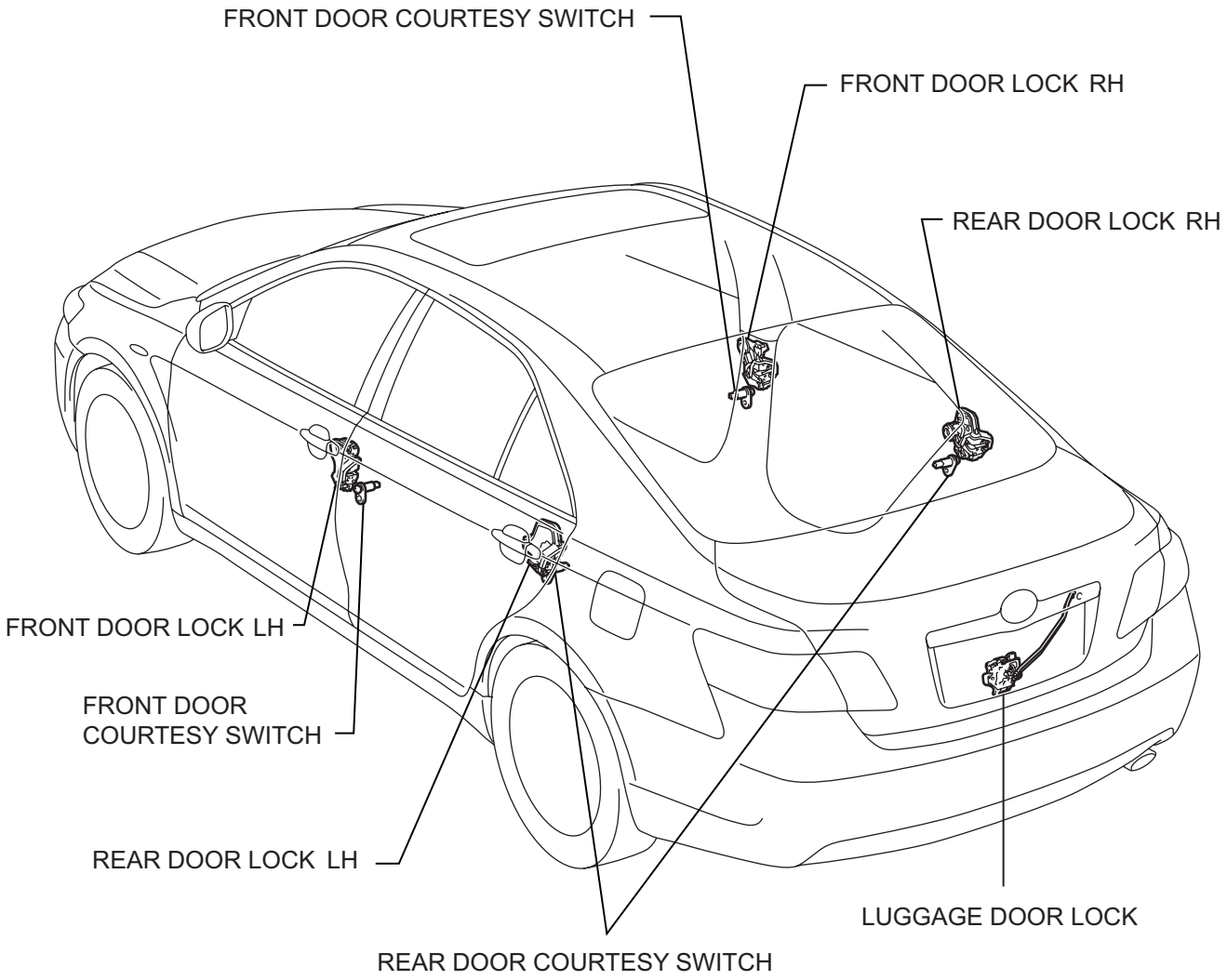


H

B137949E01

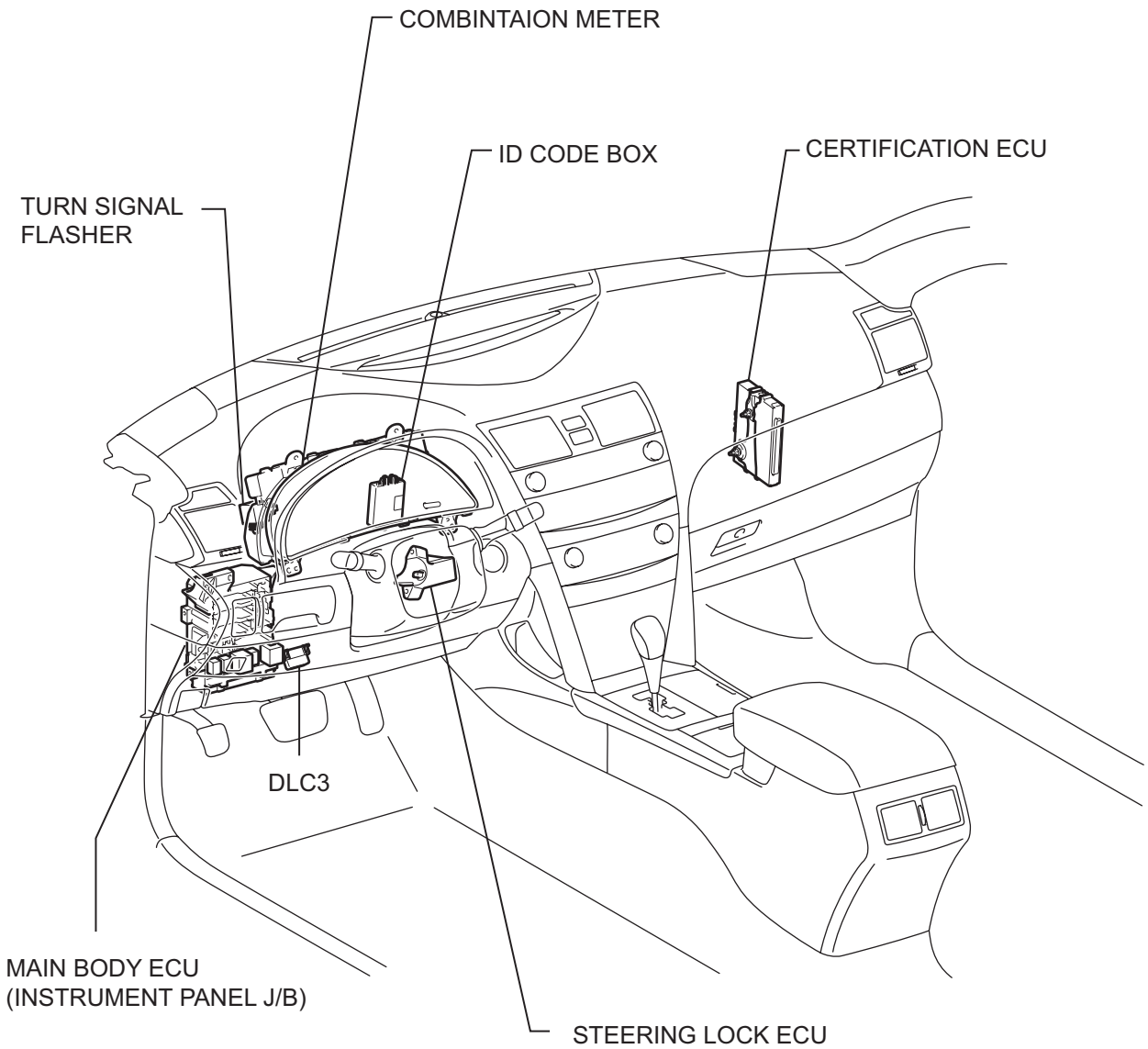


- DOOR NO. 2 FUSE
- ECU-ACC FUSE
- ECU IG NO. 1 FUSE

H

B137950E01

# SYSTEM DIAGRAM

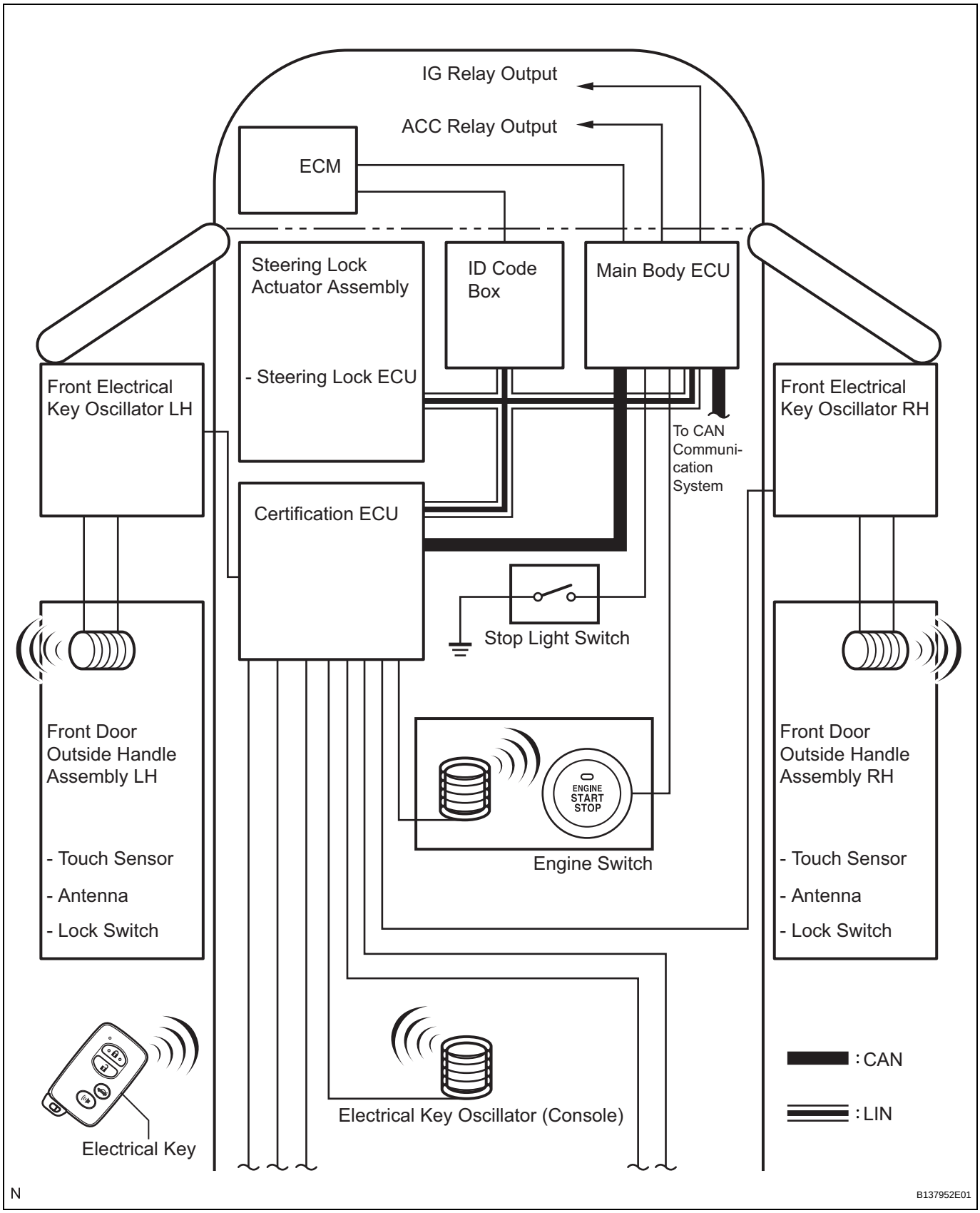


DL

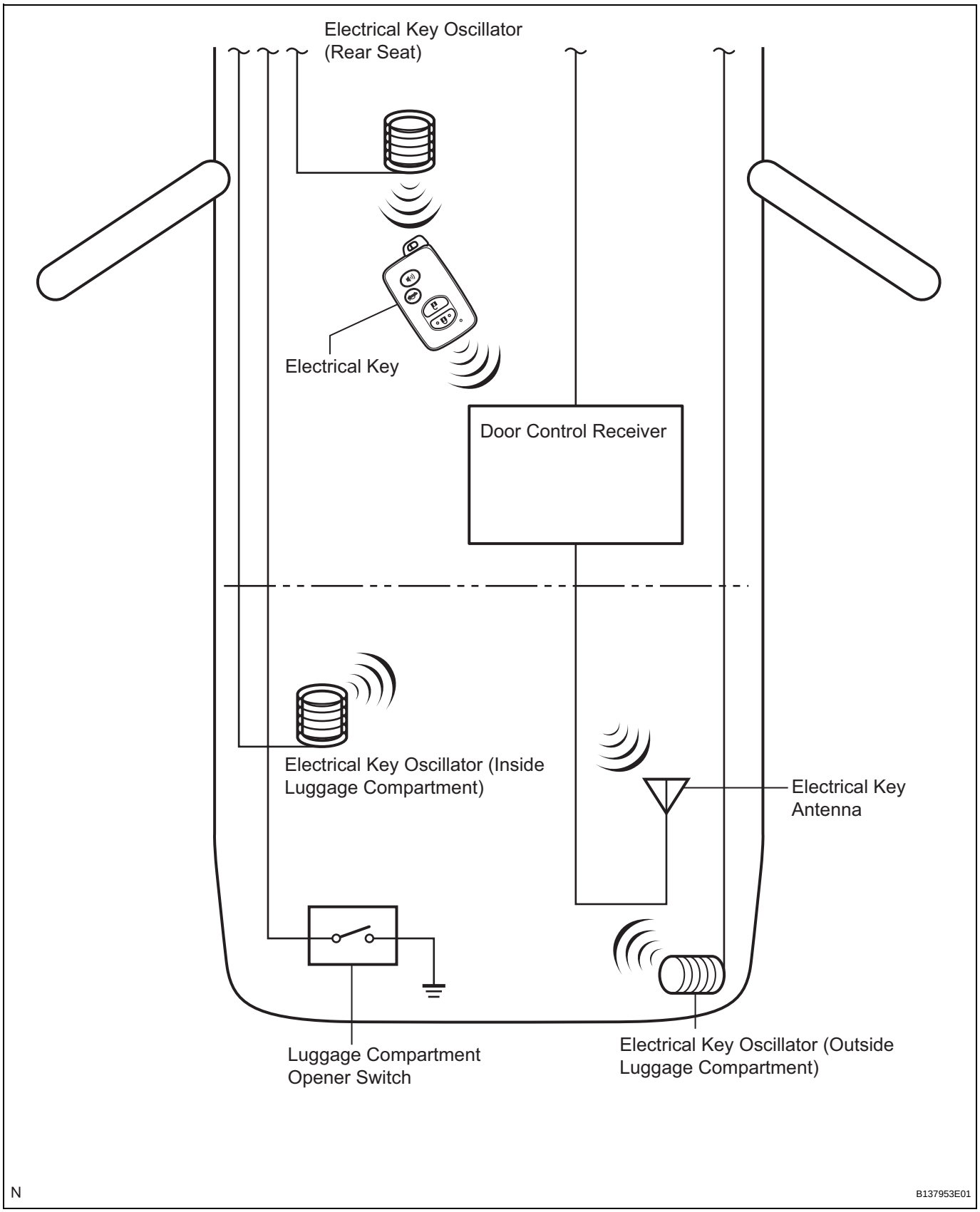
Electrical Key Oscillator
(Rear Seat)
Electrical Key
Door Control Receiver
Electrical Key Oscillator (Inside
Luggage Compartment)
Electrical Key
Antenna
Luggage Compartment
Opener Switch
Electrical Key Oscillator (Outside
Luggage Compartment)
N
B137953E01

| Transmitting ECU (Transmitter) | Receiving ECU | Signals | Communication method |
|---|---|---|---|
| Main body ECU | Certification ECU | Engine switch position signal | CAN |
| | | Courtesy light switch signal | |
| | | Door lock output signal | |
| | | Luggage compartment door output signal | |
| | | Wireless door lock buzzer request signal | |
| | | Door lock position switch signal | |
| | | D/P door key operated switch signal | |
| | | Luggage compartment door key operated switch signal | |
| Main body ECU | Combination meter | Wireless door lock buzzer request signal | CAN |
| Certification ECU | Main body ECU | Illumination light request signal | CAN |
| | | Light answer back signal | |
| Certification ECU | Driver seat ECU | Memory call replay request signal | CAN |
| Certification ECU | Combination meter | Meter buzzer single-shot request signal | CAN |
| | | Meter buzzer intermittence request signal | |
| | | Meter buzzer continuation request signal | |
| | | Door open display signal | |
| | | Key loss warning signal | |
| | | Low key battery warning signal | |
| | | Shift position warning signal | |
| | | Steering lock abnormal warning | |
| | | Steering lock unlock warning | |
| Combination meter | Certification ECU/Main body ECU | Vehicle speed signal | CAN |
| ID code box | Certification ECU | • Matching request random number signal<br>• EEP ROM access malfunction<br>• Model code matching signal<br>• Model code mismatching signal<br>• ECM code receiving status<br>• Engine start permission request signal<br>• Engine start permission response signal<br>• S code matching result signal<br>• S code registration status signal<br>• S code registration mode signal<br>• L code matching result signal<br>• ECM communication signal<br>• Registered key number response signal<br>• Diagnosis mode switching signal<br>• Registered key number signal | LIN |
| Certification ECU | ID code box | • 3 bit code request signal<br>• ID code matching result signal<br>• Registered key number signal<br>• Vehicle type handle signal | LIN |
| Certification ECU | • ID code box<br>• Steering lock ECU | • L code registration mode signal<br>• Diagnosis mode request signal<br>• DTC clear request signal<br>• L code registration status signal | LIN |
| Steering lock ECU | • Certification ECU<br>• ID code box | • Steering lock request signal<br>• Steering unlock signal<br>• Steering lock confirmation signal<br>• Steering unlock confirmation signal<br>• Diagnosis response signal<br>• Steering unlock drive relay signal<br>• Steering lock drive relay signal<br>• Steering lock motor operation signal | LIN |

| Transmitting ECU (Transmitter) | Receiving ECU | Signals | Communication method |
|---|---|---|---|
| Main body ECU | Certification ECU | • Shift position P signal<br>• Power ON operation status signal<br>• Engine starting status signal<br>• ACC relay operating status signal<br>• IG relay operating status signal | LIN |
| Main body ECU | Steering lock ECU | Steering lock relay power supply status signal | LIN |
| Steering lock ECU | • Certification ECU<br>• Main body ECU | • Steering lock catching malfunction signal<br>• Push button start malfunction signal<br>• Engine operation signal | LIN |

# SYSTEM DESCRIPTION

**CAUTION:**
**If using a pacemaker, be sure to read the manual of the pacemaker before using the electrical key because the radio waves of the electrical key may affect the pacemaker.**

**1. SMART KEY SYSTEM DESCRIPTION**

(a) In addition to conventional mechanical key and wireless door lock control functions, the smart key system enables door locking/unlocking, steering lock releasing, engine starting, and luggage compartment door opening without operating the electrical key. The only requirement is that the electrical key is in the user's possession.

- This system is controlled by the certification ECU. When the certification ECU detects the presence of an electrical key in one of the detection areas, it identifies and checks the ID code, and outputs operation signals to the related ECU in accordance with their functions.
- The detection areas are formed by 6 oscillators (2 door oscillators, 2 luggage compartment oscillators, and 2 cabin oscillators).

## 2. DETECTION AREA

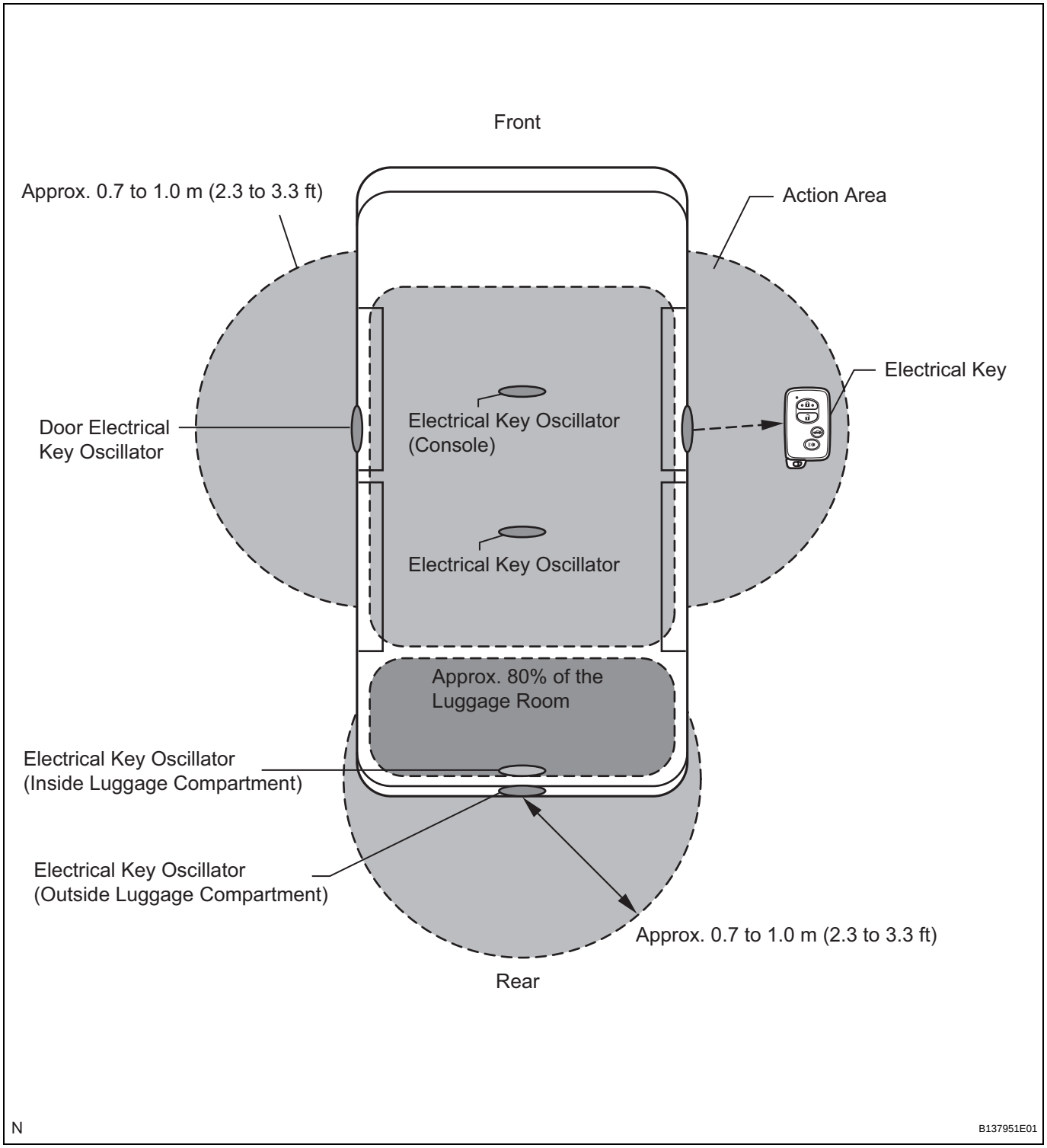


(a) Precautions for the entire system:
- Be sure to carry the electrical key during inspection of the smart key system.
- As weak radio waves are used to detect the electrical key, the electrical key detection area may decrease, or the electrical key may not be detected correctly in the following situations:
  (a) The electrical key battery is depleted.

DL

(b) Any facilities that generate strong radio waves, such as a TV tower, power plant, broadcast station, or gas station, are located near the inspection site.
(c) A wireless device, such as a cellular phone, is carried with the electrical key.
(d) The electrical key is in contact with or covered with metal.
(e) Another wireless door lock control function is operated near the vehicle.
(f) The electrical key is located near a device that generates high voltage or noise.

- The electrical key may be difficult to operate for a reason relating to the vehicle body shape.
- The electrical key may not be detected correctly if it is around the vehicle's windows, the door handle, or the center of the bumper even when it is in the detection area outside the vehicle.
- The electrical key may not be detected correctly if it is on the instrument panel, auxiliary box of the driver's side instrument panel, rear package tray, floor, or in the glove box even when it is in the detection area inside the vehicle.
- The engine cannot be started even when the electrical key is in the detection area inside the luggage compartment.
- The electrical key may not operate if the electrical key is not held properly.
- The smart key system does not operate in the following conditions:
  (a) The smart key system is canceled.
  (b) The electrical key battery is completely depleted (the indicator does not blink when pushing any of the buttons on the electrical key).

## 3. FUNCTION OF MAIN COMPONENTS

| Component | Function |
|---|---|
| Electrical Key | Consists of mechanical key, transmitter for wireless door lock control, and transceiver for smart key system |
| Certification ECU | Controls smart key system in accordance with signals from each oscillator, various switches, ECUs, and electrical key<br>• Judges and certifies ID code from entry door control receiver<br>• Transmits engine immobiliser unset signal to ID code box<br>• Transmits steering unlock signals to steering lock ECU |
| Main Body ECU (Instrument Panel J/B) | Controls push button start function in accordance with signals from various switches, ECUs, and combination meter<br>• Transmits electrical key verification request signal to certification ECU in accordance with engine switch signal, and turns relays ON and OFF<br>• Receives request signal from certification ECU and actuates door lock motor to unlock or lock door<br>• Transmits each door condition signal to certification ECU |
| ID Code ECU | Receives steering unlock or engine immobiliser unset signals from certification ECU, certifies them, and transmits unset signals to steering lock ECU or ECM |
| Outside Door Handle (driver and passenger doors) (antenna) | Transmits request signals |
| Outside Door Handle (driver and passenger doors) (touch sensor) | Detects that person touches inside of outside handle |

| Component | Function |
|---|---|
| Outside Door Handle (driver and passenger doors) (lock switch) | Transmits door lock request signals to certification ECU |
| Door Electrical Key Oscillator (driver and passenger doors) | Receives request signal from certification ECU, and forms detection area around front door |
| Indoor Electrical Key Oscillator (console and rear seat) | Receives request signal from certification ECU, and forms detection area in vehicle interior |
| Luggage Compartment Electrical Key Oscillator (inner) | Receives request signal from certification ECU, and forms detection area in luggage compartment |
| Luggage Compartment Electrical Key Oscillator (outer) | Receives request signal from certification ECU, and forms detection area around luggage compartment door |
| Door Control Receiver | • Receives ID code from electrical key in detection area and transmits it to certification ECU<br>• Receives ID code from electrical key in luggage compartment and transmits it to certification ECU |
| Electrical Key Antenna | Receives ID code from electrical key and transmits it to entry door control receiver |
| Luggage Compartment Opener Switch | Transmits luggage compartment door open request signal to certification ECU |
| Stop Light Switch | Outputs state of brake pedal to main body ECU |
| Wireless Door Lock Buzzer<br>• Combination Meter<br>– Multi-information Display<br>– Buzzer | When certification ECU detects human errors such as those below, it warns driver by sounding wireless door lock buzzer, displaying information and sounding a buzzer in combination meter in accordance with request signal from ECU<br>Example:<br>• Electrical key is taken out of vehicle<br>• Driver leaves vehicle while engine is still running<br>• Driver leaves vehicle while shift lever is in any position other than P |

## 4. CONSTRUCTION AND OPERATION

(a) Electrical Key

The electrical key consists of a mechanical key, a transmitter for the wireless door lock control, and a transceiver for the smart key system.

- The transceiver for the smart key system receives signals from the oscillators and sends the ID code to the tuner.
- The transmitter for the wireless door lock control has a LOCK switch, UNLOCK switch, LUGGAGE COMPARTMENT switch, and PANIC switch.
- This mechanical key works for the driver door, luggage compartment door, and glove box, but cannot start the engine.

A total of 7 electrical keys can be registered.

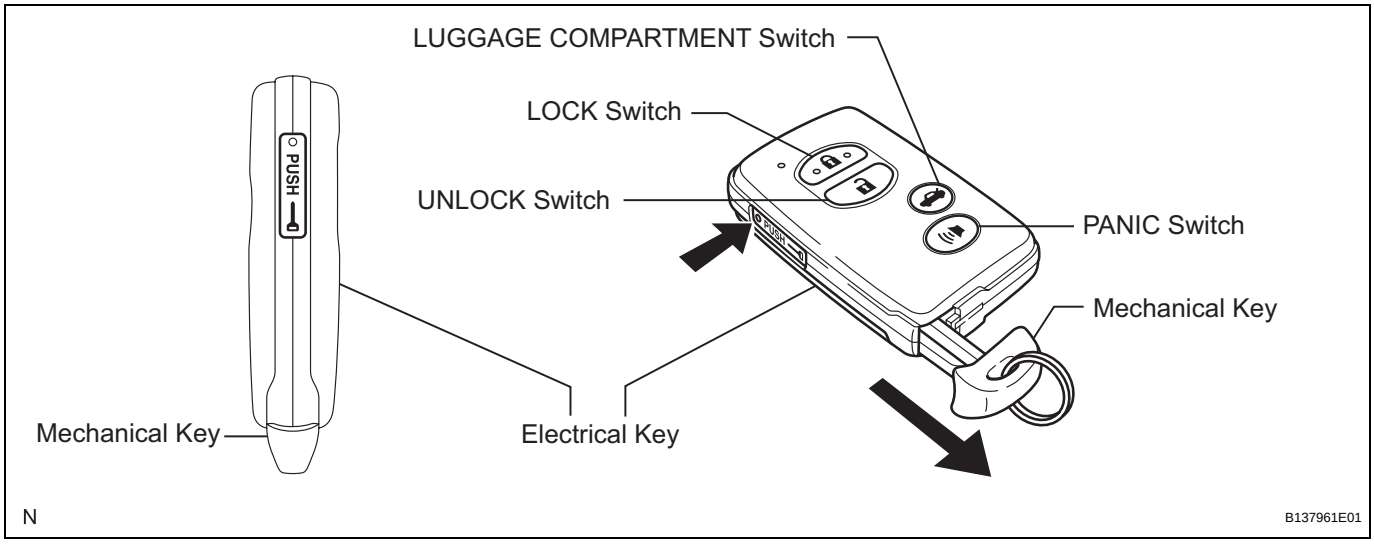


(b) Oscillator (front door oscillator, front and rear indoor oscillator, luggage compartment inner oscillator, luggage compartment outer oscillator)
Each oscillator transmits the request signal received from the certification ECU, and forms an electrical key detection area to detect the presence of an electrical key. The detection area formed by front door oscillator and luggage compartment outer oscillator is approximately 0.7 to 1.0 m (2.3 to 3.3 ft) from the outside handle of front door or the center of the rear bumper.

- The detection area of front door oscillator is formed by transmitting a request signal every 0.25 seconds while the engine switch is off and each door is locked. In this way, it detects the proximity of an electrical key. During entry lock, the detection area is formed with the lock switch on.
- The detection area of the luggage compartment outer oscillator is formed when the power luggage door open switch is on.
- The detection area of the indoor oscillator (front and rear) is formed when the driver door is opened or closed, entry luggage compartment open, electrical key lock-in prevention during start ignition, when a warning is activated, or when the lock switch is on.
- The detection area of the luggage compartment inner oscillator is formed when the luggage compartment door is closed, entry luggage compartment open, electrical key lock-in prevention, the luggage compartment open switch or lock switch is pressed.

## 5. ENTRY FUNCTION OPERATION

(a) The smart key system has the following functions:

| Function | Outline |
|---|---|
| Mechanical Key | Operation is same as conventional mechanical key. |
| Wireless Door Lock Control | This function remotely locks and unlocks all doors or luggage compartment. Operation is same as wireless door lock control system. However, receiver in certification ECU uses entry door control receiver to control locking and unlocking. |
| Entry Illumination | When person carrying electrical key enters detection area, door will enter unlock standby mode and front map light will illuminate. |
| Entry Unlock | When electrical key is located in detection area of door oscillator, door will unlock by touching inside of outside door handle. |
| Entry Unlock Mode Switching (See page DL-145) | Changes doors that can be unlocked with entry unlock function between 2 modes.<br>• Driver door mode<br>• All door mode |
| Entry Lock | When electrical key is located in detection area of door oscillator and engine switch is off, door can be locked by pressing lock switch on outside door handle. |
| Entry Luggage Compartment Open | When electrical key is in detection area of luggage compartment outer oscillator, luggage compartment opens by pressing luggage compartment open switch. |
| Memory Call | This function operates driving position memory system in accordance with electrical key ID code. |
| Electrical Key Lock-in Prevention | • Prevents confinement of electrical key if door is locked using outside door handle while electrical key is still inside vehicle.<br>• If all doors are locked and luggage compartment door is closed while electrical key is still in luggage compartment, warning buzzer sounds. If luggage compartment open switch is operated, luggage compartment door can be opened. |
| Warning | When any of situations below occur, smart key system causes certification ECU to sound buzzer in combination meter and wireless door lock buzzer, and display information in order to alert driver.<br>• Exit warning if shift lever position is not P and power source mode is not off.<br>• Exit warning if shift lever position is P and power source mode is not off.<br>• Warning if occupant leaves with electrical key.<br>• Warning if engine switch is operated while electrical key is outside actuation area.<br>• Warning if entry lock is operated while electrical key is inside vehicle.<br>• Warning if electrical key battery is weak. |
| Battery Saving | If electrical key is constantly located within actuation area of door oscillator, system maintains periodic communication with electrical key. Therefore, if vehicle remains parked in that state for a long time, electrical key battery and vehicle battery could be drained. |
| Key Cancel (See page DL-145) | Following electrical key functions can be cancelled by performing certain operations:<br>• Entry Unlock/Lock<br>• Memory Call<br>• Entry Luggage Compartment Open<br>• Electrical key Lock-in Prevention<br>• Warning |
| Electrical Key Code Registration | The total number of electrical keys that can be registered is seven. Enables the registration (writing and storing) of transmitter recognition codes in the EEPROM that is contained in the certification ECU. |

## 6. WIRELESS DOOR LOCK AND UNLOCK AND LUGGAGE COMPARTMENT OPEN FUNCTION

Push the LOCK/UNLOCK/PANIC/LUGGAGE COMPARTMENT switch on the electrical key to operate each function. For details, (See page DL-69).

**7. ENTRY UNLOCK FUNCTION**

(a) The detection area is formed by communication between a door oscillator and door control receiver when the door is locked in order to detect access of the person carrying the electrical key.

(b) When the person carrying the electrical key enters the detection area around the vehicle, the matching of the ID codes for a door oscillator and electrical key will automatically be performed. After the matching is completed, the door will enter unlock standby mode.

(c) In unlock standby mode, the antenna built into the outside handle starts sensing. If the outside handle is held (the back side of the handle is touched), the door unlock operation will be performed. At this time, the hazard warning light blinks twice and the wireless door lock buzzer sounds twice.

(d) If any of the doors are not opened after a door unlock operation, all doors will automatically lock after 60 seconds.

**8. ENTRY LOCK FUNCTION**

(a) After leaving the vehicle carrying the electrical key, push the lock switch on the outside handle when all the doors are closed.

(b) The certification ECU determines whether the electrical key is located inside or outside of the cabin based on the information from a door oscillator and room oscillator. Then matching of the ID codes is performed.

(c) When the matching result shows that the ID codes of the electrical key and indoor antenna do not match and the ID codes of the electrical key and door oscillator match, the door lock function will operate. At this time, the hazard warning lights blink once and the wireless door lock buzzer sounds once.

(d) If the electrical key is located inside of the cabin, the door lock function will not operate and the alarm buzzer (beep sound) will sound for 2 seconds.

**9. ENTRY LUGGAGE COMPARTMENT OPEN FUNCTION**

Stand in front of the luggage compartment with the electrical key and push the power luggage compartment opener switch to start the matching of the ID codes for the electrical key oscillator (outside luggage compartment). If the ID codes match, luggage compartment door open operation will be performed.

**10. PREVENTION OF ELECTRICAL KEY CONFINEMENT FUNCTION**

(a) If you attempt to lock the door through keyless operation (move the lock knob to the lock position and then close the door) with the electrical key in the cabin, the system determines that the electrical key is located in the cabin and unlocks the door.

(b) If the luggage compartment is closed with the electrical key in it, the alarm will sound and the luggage compartment can be opened only when all the doors are locked in order to prevent electrical key confinement in the vehicle.

**11. ENTRY ILLUMINATION FUNCTION**

When a person carrying the electrical key enters the detection area, the door will enter unlock standby mode and the front map light will illuminate.

HINT:

The entry illumination function operates when the electrical key enters the vehicle exterior detection area from out of the detection area. If the electrical key remains in the detection area for 3 seconds or more, the illumination function does not operate.

**12. MEMORY CALL FUNCTION**

When the engine switch is off and the driver side door is closed, opening the door will operate the memory call function (the door will move to a previously recorded driving position). Using the electrical key, memory call, electrical key registration and electrical key cancellation can be performed.

**13. WARNING FUNCTION**

(a) General

When any of the situations below occur, the smart key system causes the certification ECU to sound the buzzer in the combination meter and the wireless door lock buzzer, and illuminate the combination meter's multi-information display in order to alert the driver.

| Warning Function Operation Condition | Situation |
|---|---|
| Exit warning if shift lever position is not P and power source mode is not off. | A |
| Exit warning if shift lever position is P and power source mode is not off. | B |
| Warning if occupant leaves with electrical key. | C |
| Warning if engine switch is operated while electrical key is outside detection area. | D |
| Warning if entry lock is operated while electrical key is inside cabin. | E |
| Warning if electrical key battery is weak. | F |

(b) Situation A

There are 2 patterns for situation A.

Pattern 1: In situation A, the door is opened and the user tries to leave the vehicle.

Pattern 2: Then the user holds the electrical key and tries to move away from the vehicle.

In these situations, the following control is performed:

- Pattern 1

| Possible Effects without Warning | Sudden vehicle start, vehicle theft, vehicle roll-away |
|---|---|
| Warning Condition | Certification ECU gives warning when all following conditions are satisfied:<br>• Shift lever position is not P<br>• Engine switch is not off<br>• Driver side door is opened<br>• Vehicle speed is 5 km/h (3.1 mph) |

| Possible Effects without Warning | Sudden vehicle start, vehicle theft, vehicle roll-away |
|---|---|
| Combination Meter<br>• Buzzer | Warning:<br>Continuous sound<br>Warning is stopped when one of following conditions is met:<br>• Engine switch is off<br>• Shift lever position is P<br>• Driver side door is opened<br>• Vehicle speed is above 5 km/h (3.1 mph) |
| Combination Meter<br>• Multi-information Display | Warning:<br>Continuous sound<br>Warning is stopped when one of following conditions is met:<br>• Engine switch is off<br>• Shift lever position is P<br>• Driver side door is opened<br>• Vehicle speed is above 5 km/h (3.1 mph) |
| Wireless Door Lock Buzzer | - |

- Pattern 2

| Possible Effects without Warning | Sudden vehicle start, vehicle theft, vehicle roll-away |
|---|---|
| Warning Condition | Certification ECU gives warning when all following conditions are satisfied:<br>• Shift lever position is not P<br>• Engine switch is not off<br>• Driver side door is opened and closed<br>• Vehicle speed is 0 km/h (0 mph)<br>• Electrical key is not in cabin or luggage compartment |
| Combination Meter<br>• Buzzer | Warning:<br>Continuous sound<br>Warning is stopped when one of following conditions is met:<br>• Engine switch is off<br>• Shift lever position is P<br>• Electrical key is in cabin or luggage compartment<br>• Vehicle speed is above 0 km/h (0 mph) |
| Combination Meter<br>• Multi-information Display | Warning:<br>Information below is displayed alternately on combination meter:<br>• "Shift to P Range"<br>• "Key is not Detected"<br>"Shift to P Range" warning is stopped when one of following conditions is met:<br>• Engine switch is off<br>• Vehicle speed is above 0 km/h (0 mph)<br>• Shift lever position is P<br>"Key is not Detected" warning is stopped when either of following conditions is met:<br>• Engine switch is off<br>• Electrical key is in cabin |
| Wireless Door Lock Buzzer | Warning:<br>Continuous sound<br>Warning is stopped when one of following conditions is met:<br>• Engine switch is off<br>• Shift lever position is P<br>• Electrical key is in cabin or luggage compartment<br>• Vehicle speed is above 0 km/h (0 mph) |

(c) Situation B

There are 2 patterns for situation B.

Pattern 1: In situation B, the door is opened and the user tries to leave the vehicle.

Then the user holds the electrical key and tries to move away from the vehicle.

Pattern 2: Then the user tries to use the entry lock and presses the lock switch.

In these situations, the following control is performed:

- Pattern 1

| Possible Effects without Warning | Vehicle theft, engine cannot be restarted |
|---|---|
| Warning Condition | Certification ECU gives warning when all following conditions are satisfied:<br>• Shift lever position is P<br>• Engine switch is not off<br>• Driver side door is opened and closed<br>• Electrical key is not in cabin or luggage compartment |
| Combination Meter<br>• Buzzer | Warning:<br>Sounds once |
| Combination Meter<br>• Multi-information Display | Warning:<br>Information below is displayed on combination meter:<br>• "Key is not Detected"<br>Warning is stopped when either of following conditions is met:<br>• Engine switch is off<br>• Electrical key is in cabin or luggage compartment |
| Wireless Door Lock Buzzer | Warning:<br>Sounds 3 times<br>Warning is stopped when either of following conditions is met:<br>• Engine switch is off<br>• Electrical key is in cabin or luggage compartment |

- Pattern 2

| Possible Effects without Warning | Vehicle theft |
|---|---|
| Warning Condition | Certification ECU gives warning when all following conditions are satisfied:<br>• Shift lever position is P<br>• Engine switch is not off<br>• All doors are closed<br>• Lock switch is "ON"<br>• Electrical key is not in cabin or luggage compartment |
| Combination Meter<br>• Buzzer | - |
| Combination Meter<br>• Multi-information Display | - |
| Wireless Door Lock Buzzer | Warning:<br>Sounds for 2 seconds |

DL

(d) Situation C

In this situation, the following control is performed:

| Possible Effects without Warning | Engine cannot be restarted |
|---|---|
| Warning Condition | Certification ECU gives warning when all following conditions are satisfied:<br>• Engine switch is not off<br>• Door other than driver side door is opened and closed<br>• Vehicle speed is 0 km/h (0 mph)<br>• Electrical key is not in cabin or luggage compartment |
| Combination Meter<br>• Buzzer | Warning:<br>Sounds once |

| Possible Effects without Warning | Engine cannot be restarted |
|---|---|
| Combination Meter<br>• Multi-information Display | Warning:<br>Information below is displayed on combination meter:<br>• "Key is not Detected"<br>Warning is stopped when one of following conditions is met:<br>• Engine switch is off<br>• Vehicle speed is above 0 km/h (0 mph)<br>• Electrical key is in cabin or luggage compartment |
| Wireless Door Lock Buzzer | Warning:<br>Sounds 3 times<br>Warning is stopped when one of following conditions is met:<br>• Engine switch is off<br>• Vehicle speed is above 0 km/h (0 mph)<br>• Electrical key is in cabin or luggage compartment |

(e) Situation D
In this situation, the following control is performed:

| Possible Effects without Warning | Confuses the user |
|---|---|
| Warning Condition | Certification ECU gives warning when both following conditions are satisfied:<br>• Engine switch is not off<br>• Electrical key is not in cabin |
| Combination Meter<br>• Buzzer | Warning:<br>Sounds once |
| Combination Meter<br>• Multi-information Display | Warning:<br>Information below is displayed on combination meter for 8 seconds (disappears after 8 seconds):<br>• "Key is not Detected" |
| Wireless Door Lock Buzzer | - |

(f) Situation E
In this situation, the following control is performed:

| Possible Effects without Warning | Vehicle theft |
|---|---|
| Warning Condition | Certification ECU gives warning when all following conditions are satisfied:<br>• Engine switch is off<br>• All doors are closed<br>• Lock switch is "ON"<br>• Electrical key is in cabin or luggage compartment |
| Combination Meter<br>• Buzzer | - |
| Combination Meter<br>• Multi-information Display | - |
| Wireless Door Lock Buzzer | Warning:<br>Sounds for 2 seconds |



(g) Situation F
In this situation, the following control is performed:

| Possible Effects without Warning | Smart key system does not function |
|---|---|
| Warning Condition | Certification ECU gives warning when all following conditions are satisfied:<br>• Engine switch is turned off after being left on (IG) for over 20 minutes<br>• Electrical key battery voltage is low<br>• Electrical key is in cabin |
| Combination Meter<br>• Buzzer | Warning:<br>Sounds once |
| Combination Meter<br>• Multi-information Display | Information below is displayed on combination meter:<br>• "Low Key Battery" |
| Wireless Door Lock Buzzer | - |

## 14. BATTERY SAVING

(a) Vehicle Battery Saving Function

In the smart key system, signals are emitted outside of the vehicle at a prescribed interval (0.25 seconds) when the doors are locked. Therefore, the vehicle battery could be drained if the vehicle remains parked for a long time. For this reason, the controls listed below are carried out:

| Condition | Control |
|---|---|
| Both conditions below are met for 5 days:<br>• Electrical key is not in detection area<br>• Touch sensor or lock switch operation is not performed | Signal transmission interval is extended from 0.25 to 0.75 seconds |
| Both conditions below are met for 14 days:<br>• Electrical key is not in detection area<br>• Touch sensor or lock switch operation is not performed | Automatically deactivates the smart key system |

Reinstatement Conditions

- A wireless door lock control signal (lock, unlock) is input and the ID code matches.
- A user carries the electrical key and pushes a lock switch on an outside door handle.
- A door is locked or unlocked by the mechanical key.

(b) Electrical Key Battery and Vehicle Battery Saving Function

In the smart key system, if the electrical key is constantly located within the vehicle exterior detection area of the doors, the system maintains periodic communication with the electrical key. Therefore, if the vehicle remains parked in that state for a long time, the electrical key battery and the vehicle battery could be drained. For this reason, if this state continues longer than 10 minutes, the smart key system automatically becomes deactivated.

Reinstatement Conditions

- A wireless door lock control signal (lock, unlock) is input and the ID code matches.
- A user carries the electrical key and pushes a lock switch on an outside door handle.
- A door is locked or unlocked by the mechanical key.

# HOW TO PROCEED WITH TROUBLESHOOTING

HINT:
- Use the following procedures to troubleshoot the smart key system.
- The intelligent tester can be used in steps 4, 5 and 7.
- When troubleshooting the smart key system using the intelligent tester with the engine switch off, connect the intelligent tester to the vehicle and repeat turning any of the courtesy light switches on and off until communication between the tester and the vehicle begins (the interval between ON and OFF should be less than 1.5 sec.).

## 1 VEHICLE BROUGHT TO WORKSHOP

NEXT

## 2 CUSTOMER PROBLEM ANALYSIS CHECK

HINT:
- In troubleshooting, confirm that the problem symptoms have been accurately identified. Preconceptions should be discarded in order to make an accurate judgment. To clearly understand what the problem symptoms are, it is extremely important to ask the customer about the problem and the conditions at the time the malfunction occurred.
- Gather as much information as possible for reference. Past problems that seem unrelated may also help in some cases.
- The following 5 items are important points in the problem analysis

| | |
|---|---|
| What | Vehicle model, system name |
| When | Date, time, occurrence frequency |
| Where | Road conditions |
| Under what conditions? | Running conditions, driving conditions, weather conditions |
| How did it happen? | Problem symptoms |



NEXT

## 3 INSPECT BATTERY VOLTAGE

**Standard voltage:**
**11 to 14 V**

If the voltage is below 11 V, recharge or replace the battery before proceeding to the next step.

NEXT

## 4 INSPECT COMMUNICATION FUNCTION OF CAN COMMUNICATION SYSTEM

(a) Use the intelligent tester to check if the CAN Communication System is functioning normally (See page CA-8).

**Result**

| Result | Proceed to |
|---|---|
| CAN DTC is not output | A |
| CAN DTC is output | B |

B → **GO TO CAN COMMUNICATION SYSTEM**

A

## 5 CHECK FOR DTC

(a) Check for DTCs and note any codes that are output (See page DL-156).
(b) Delete the DTCs.
(c) Recheck for DTCs.

**Result**

| Result | Proceed to |
|---|---|
| DTC does not reoccur | A |
| DTC reoccurs | B |

B → **GO TO DIAGNOSTIC TROUBLE CODE CHART**

A

## 6 PROBLEM SYMPTOMS TABLE

NEXT

## 7 OVERALL ANALYSIS AND TROUBLESHOOTING

(a) On-vehicle inspection (See page DL-160)
(b) DATA LIST/ACTIVE TEST (See page DL-156)
(c) Terminals of ECU (See page DL-150)

NEXT

## 8 REPAIR OR REPLACEMENT

NEXT

| 9 | CONFIRMATION TEST |
|---|---|

NEXT

END

# CUSTOMIZE PARAMETERS

**1. CUSTOMIZING FUNCTION WITH INTELLIGENT TESTER**

HINT:
The items in the table below can be customized.

**NOTICE:**

- **When the customer requests a change in a function, first make sure that the function can be customized.**
- **Be sure to make a note of the current setting before customizing.**
- **When troubleshooting a function, first make sure that the function is set to the default setting.**

HINT:
The following functions' default settings are ON. Part of these functions can be customized.

**SMART:**

| Display (Item) | Default | Contents | Setting |
|---|---|---|---|
| PARK WAIT TIME (Wait time to permit opening door after locking) | 2.5s | Function that sets waiting time to permit opening door after door is locked with entry lock function. | 0.5s / 1.5s / 2.5s / 5.0s |
| SMART UNLOCK | D_DOOR | Function that switches the entry unlock detection area. | ALL / D_DOOR |
| SMART IGNITION (SMART ignition available area) | ALL | Function to choose the available area for electrical key to start E/G and cancel the steering lock. | FRONT / ALL |
| SMART TRUNK (Luggage compartment opening operation) | ON | Function to open a luggage compartment when the driver has the electrical key and presses the luggage open button. | ON / OFF |

**WIRELESS DOOR LOCK:**

| Display (Item) | Default | Contents | Setting |
|---|---|---|---|
| ALARM FUNCTION (Panic function) | ON | Function to operate the theft deterrent system by keeping pressing the lock button of the transmitter for 2.5 seconds. If there is a panic button, press the panic button instead of the lock button. | ON / OFF |

**WARNING:**

| Display (Item) | Default | Contents | Setting |
|---|---|---|---|
| KEY LOW-BATT WRN | ON | Function to set a warning function for the time when a key battery becomes weak. | ON / OFF |

**2. Entry Unlock Mode Switching Function**

(a) To change the vehicle to entry unlock mode switching function, make sure the vehicle power is off and simultaneously press and hold the electrical key's LOCK switch and another electrical key switch for 4.5 seconds.
When the switches are pressed and held for 4.5seconds, the entry door unlock mode changes in the following order: driver door mode, all door mode.
**NOTICE:**
**After pressing and holding the switches for 4.5 seconds, wait 5 seconds before performing the same procedure again.**

- Driver door unlock mode:
  When the driver door's touch sensor is touched, only the driver door unlocks. When another touch sensor is touched, all doors unlock.
- All door unlock mode:
  When the touch sensor is touched, all doors unlock.

(b) The certification ECU receives this signal from the entry door control receiver and changes the smart key system to the entry unlock mode.

(c) The certification ECU sounds the buzzers of the wireless door lock buzzer and combination meter to inform the user that the mode has been switched.

| Mode | Wireless Door Lock Buzzer | Combination Meter | | |
|---|---|---|---|---|
| | | Multi-information Display | | Buzzer |
| Driver Door (Default) | ON<br>OFF<br>Sounds 3 times | Displayed for 5 sec. | Passenger, rear LH and RH door “open” indication | Sounds once |
| All Doors (Customized) | ON<br>OFF<br>Sounds 2 times | Displayed for 5 sec. | All door “open” indication | Sounds once |

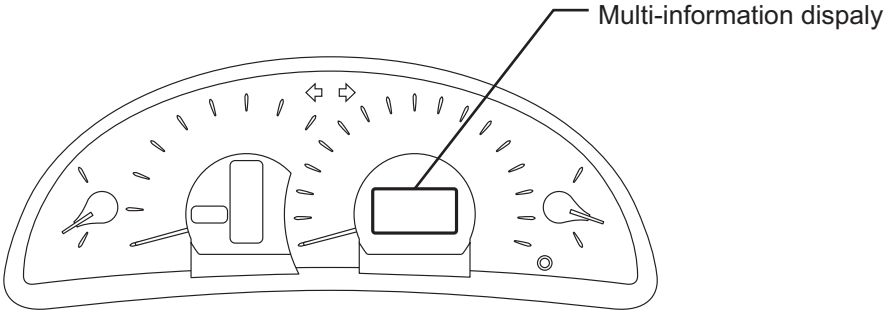


N

B137954E01

HINT:
The function only changes the entry unlock mode of the smart key system. It does not switch the unlocking of the wireless door lock control.

**3. Electrical Key Cancel**

The electrical key cancel operation disables the following functions:

- Entry Ignition
- Entry Unlock/Lock
- Entry Luggage Compartment Open
- Electrical Key Lock-in Prevention
- Warning
- Memory Call

(a) The operation procedures are as follows:
Precondition:
Engine switch off, driver side door closed and unlocked.

(1) Unlock the driver side door once with the UNLOCK switch of the electrical key.
(2) Open the driver door within 5 seconds.
(3) Unlock the driver side door twice with the UNLOCK switch of the electrical key within 5 seconds.
(4) Repeat open → close twice for the driver door within 30 seconds, and open again.
(Driver door: Open → Close → Open → Close → Open)
(5) Unlock the driver side door twice with the UNLOCK switch of the electrical key within 5 seconds.
(6) Repeat open → close once for the driver door within 30 seconds, and open again.
(Driver door: Open → Close → Open)
(7) Close the driver door within 5 seconds.
When electrical key cancel is activated, the wireless door lock buzzer sounds twice.
To return to the original condition, perform the procedures again. When the original condition is returned, the wireless door lock buzzer sounds once.

# PROBLEM SYMPTOMS TABLE

HINT:

- Use the table below to help determine the cause of the problem symptoms. The potential causes of the symptoms are listed in order of probability in the "Suspected area" column of the table. Check each symptom by checking the suspected areas in the order they are listed. Replace parts as necessary.
- Inspect the fuses and relays related to this system before inspecting the suspected areas below.

## SMART KEY SYSTEM:

| Symptom | Suspected area | See page |
|---|---|---|
| Entry lock/unlock does not operate. | 1. Check for DTCs in the smart key system (Starting function). | ST-26 |
| | 2. Refer to PROBLEM SYMPTOMS TABLE of the power door lock control system ("All doors cannot be locked/unlocked simultaneously by neither door control switch nor door key cylinder"). | DL-11 |
| | 3. Courtesy light switch circuit | LI-52 |
| | 4. Lock position switch circuit | - |
| | - Driver door | DL-19 |
| | - Front passenger door | DL-22 |
| | - Rear passenger door LH | DL-25 |
| | - Rear passenger door RH | DL-28 |
| | 5. Entry lock switch cirucit | DL-173 |
| | 6. Touch sensor circuit | DL-177 |
| | 7. Antenna circuit | DL-180 |
| | 8. Refer to "ID code matching inside the cabin cannot be performed". | - |
| | 9. Door oscillator circuit | DL-168 |
| | 10. Replace the main body ECU. | - |
| | 11. Replace the certification ECU. | - |
| Luggage compartment does not open (when the electrical key is outside the vehicle). | 1. Check for DTCs in the smart key system (Starting function). | ST-26 |
| | 2. Check if any function is cancelled due to customization. | DL-145 |
| | 3. Refer to PROBLEM SYMPTOM TABLE of the power door lock control system ("Luggage compartment door opener does not operate"). | DL-11 |
| | 4. Operate the luggage compartment opener switch on the electrical key to check the wireless function. | DL-71 |
| | 5. Refer to PROBLEM SYMPTOMS TABLE of the wireless door lock control system of the wireless door lock control system ("The wireless door lock control system does not operate"). | DL-74 |
| | 6. Check operation of the cabin oscillator in active test. | DL-156 |
| | 7. Luggage oscillator circuit | DL-182 |
| | 8. Luggage compartment opener switch circuit | DL-188 |
| | 9. Replace the main body ECU. | - |
| | 10. Replace the certification ECU. | - |
| All entry function does not operate. | 1. Registration of the key. | EI-8 |
| | 2. Certification ECU power source circuit | DL-190 |
| | 3. Replace certification ECU. | - |

| Symptom | Suspected area | See page |
|---|---|---|
| Function to prevent electrical key confinement in the luggage compartment does not operate. (The luggage compartment does not open.) | 1. Check for DTCs in the smart key system (Starting function). | ST-26 |
| | 2. Power door lock control system | DL-11 |
| | 3. Courtesy light switch circuit | LI-52 |
| | 4. Lock position switch circuit | - |
| | - Driver door | DL-19 |
| | - Front passenger door | DL-22 |
| | - Rear passenger door LH | DL-38 |
| | - Rear passenger door RH | DL-28 |
| | 5. Check if any function is not cancelled due to customization. | DL-145 |
| | 6. Operate the LOCK/UNLOCK SW on the key to check the wireless function. | DL-71 |
| | 7. Refer to PROBLEM SYMPTOMS TABLE of the wireless door lock control system ("The wireless door lock control system does not operate"). | DL-74 |
| | 8. Check operation of the cabin oscillator in active test. | DL-156 |
| | 9. Luggage oscillator circuit | DL-182 |
| | 10. Replace the main body ECU. | - |
| | 11. Replace the certification ECU. | - |
| Function to prevent electrical key confinement in the luggage compartment does not operate. (The alarm does not sound.) | 1. Check if the function to prevent electrical key confinement in the luggage compartment operates. | DL-160 |
| | 2. Check if answer back is performed when the wireless door lock is operated. | DL-74 |
| | 3. Replace the certification ECU. | - |
| The outside alarm of the answer back and entry systems does not sound. | 1. Check if the function to prevent electrical key confinement in the luggage compartment operates. | DL-160 |
| | 2. Check that "WIRLS BUZZ RESP" and "HAZARD ANS BACK" in the DATA LIST of the main body ECU are YES. (If it is NO, go to power door lock system.) | DL-81 |
| | 3. Wireless door lock tuner circuit (DTC B1242) | DL-164 |
| | 4. Replace the certification ECU. | - |
| The inside alarm of the entry system does not sound. | 1. Operate the LOCK/UNLOCK SW on the electrical key to check the wireless function. | DL-71 |
| | 2. Refer to PROBLEM SYMPTOMS TABLE of the wireless door lock control system ("Wireless door lock function"). | DL-74 |
| | 3. Check if the electrical key reminder buzzer sounds. | DL-160 |
| | 4. Replace the certification ECU. | - |
| ID code matching inside the cabin cannot be performed. | 1. Check if any function is cancelled due to customization. | DL-145 |
| | 2. Operate the LOCK/UNLOCK SW on the key to check the wireless function. | DL-71 |
| | 3. Refer to PROBLEM SYMPTOMS TABLE of the wireless door lock control system ("The wireless door lock control system does not operate"). | DL-74 |
| | 4. Check the cabin oscillator operation in the active test. | DL-156 |
| | 5. Room oscillator circuit | DL-185 |
| | 6. Luggage oscillator circuit | DL-182 |
| | 7. Replace the certification ECU. | - |
| ID code matching outside the cabin cannot be performed. | 1. Check if any function is cancelled due to customization. | DL-145 |
| | 2. Operate the LOCK/UNLOCK SW on the electrical key to check the wireless function. | DL-71 |
| | 3. Refer to PROBLEM SYMPTOMS TABLE of the wireless door lock control system ("The wireless door lock control system does not operate"). | DL-74 |
| | 4. Check operation of each door oscillator in active test. | DL-156 |
| | 5. Door oscillator circuit | DL-168 |

| Symptom | Suspected area | See page |
|---|---|---|
| Key reminder buzzer does not sound. | 1. Perform ACTIVE TEST for the combination meter. | ME-32 |
| | 2. Check "COURTESY SW" in the DATA LIST of the power door lock control system. | DL-17 |
| | 3. Check the key reminder buzzer when the engine switch is on (ACC) and the driver's door is opened. | - |
| | 4. Check if the steering wheel is locked when all power supplies are OFF and the driver's door is opened. | - |
| | 5. Refer to PROBLEM SYMPTOMS TABLE of the steering lock system ("Steering wheel cannot be locked"). | SR-10 |
| | 6. Check that the "LCK BAR STUCK" item in the DATA LIST of the certification ECU displays OK. | SR-14 |
| | 7. Replace the steering lock ECU. | - |
| | 8. Replace the certification ECU. | - |

# TERMINALS OF ECU

## 1. CHECK CERTIFICATION ECU

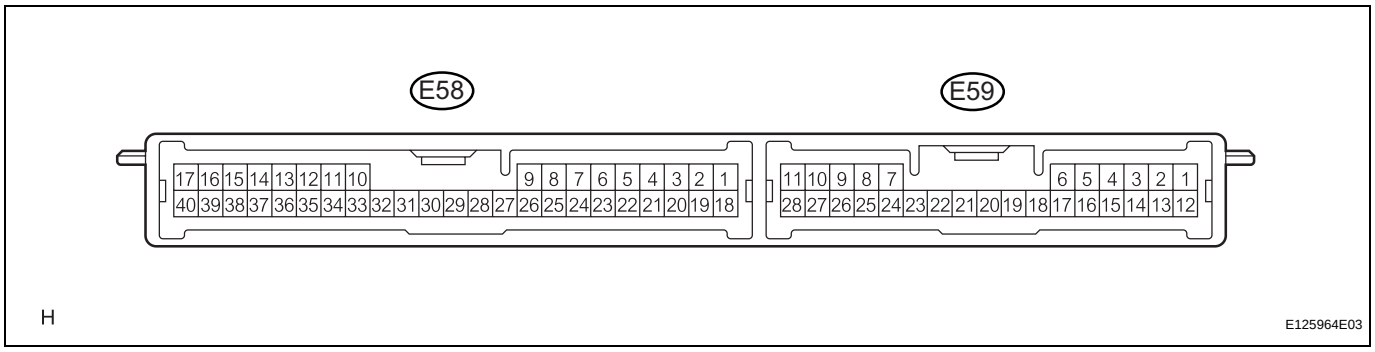


(a) Disconnect the E58 ECU connector.
(b) Measure the voltage and resistance according to the value(s) in the table below.

| Symbols (Terminal No.) | Wiring Color | Terminal Description | Condition | Specified Condition |
|---|---|---|---|---|
| +B (E58-1) - Body ground | W - Body ground | +B power supply | Always | 10 to 14 V |
| IG (E58-18) - Body ground | LG - Body ground | Ignition power supply | Engine switch off | Below 1 V |
| IG (E58-18) - Body ground | LG - Body ground | Ignition power supply | Engine switch on (IG) | 10 to 14 V |
| E (E58-17) - Body ground | W-B - Body ground | Ground | Always | Below 1 Ω |
| ACC (E58-19) - Body ground | L - Body ground | ACC power supply | Engine switch off | Below 1 V |
| ACC (E58-19) - Body ground | L - Body ground | ACC power supply | Engine switch on (ACC) | 10 to 14 V |
| TSW1 (E58-3) - Body ground | GR - Body ground | Entry lock switch signal | Front lock switch LH not pushed | 10 kΩ or higher |
| TSW1 (E58-3) - Body ground | GR - Body ground | Entry lock switch signal | Front lock switch LH pushed | Below 1 Ω |
| TSW2 (E58-4) - Body ground | L - Body ground | Entry lock switch signal | Front lock switch RH not pushed | 10 kΩ or higher |
| TSW2 (E58-4) - Body ground | L - Body ground | Entry lock switch signal | Front lock switch RH pushed | Below 1 Ω |
| LIN (E58-10) - Body ground | O - Body ground | LIN line | Always | 10 kΩ or higher |
| CANH (E58-27) - Body ground | L - Body ground | CAN line | Always | 10 kΩ or higher |
| CANL (E58-28) - Body ground | W - Body ground | CAN line | Always | 10 kΩ or higher |
| AGND (E58-40) - Body ground | G - Body ground | Ground | Always | Below 1 Ω |
| TSW5 (E58-7) - Body ground | G - Body ground | Luggage compartment opener switch signal | Opener switch OFF | 10 kΩ or higher |
| TSW5 (E58-7) - Body ground | G - Body ground | Luggage compartment opener switch signal | Opener switch ON | Below 1 Ω |

If the result is not as specified, the wire harness side may have a malfunction.

(c) Reconnect the E58 ECU connector.
(d) Measure the voltage according to the value(s) in the table below.

| Symbols (Terminal No.) | Wiring Color | Terminal Description | Condition | Specified Condition |
|---|---|---|---|---|
| CLG1 (E58-33) - CG1B (E58-34) | LG - L | Door electrical key oscillator (front LH) sensor signal | All doors closed, all doors locked and engine switch off | Alternating between 5 V and below 1 V |
| CLG1 (E58-33) - CG1B (E58-34) | LG - L | Door electrical key oscillator (front LH) sensor signal | Door unlocked or door open | Below 1 V |
| SEN1 (E58-22) - E (E58-17) | B - W-B | Touch sensor detection signal | Outside door handle touched | Below 1 V |

| Symbols (Terminal No.) | Wiring Color | Terminal Description | Condition | Specified Condition |
|---|---|---|---|---|
| SEN1 (E58-22) - E (E58-17) | B - W-B | Touch sensor detection signal | Outside door handle not touched (Have the electrical key outside the cabin) | 10 to 14 V |
| SEL1 (E58-5) - E (E58-17) | V - W-B | Touch sensor activation control signal | Move the key more than 5 m (16.4 ft) away from the front door LH | 10 to 14 V |
| SEL1 (E58-5) - E (E58-17) | V - W-B | Touch sensor activation control signal | Bring it to the outside handle | Below 1 V |
| CLG2 (E58-35) - CG2B (E58-36) | GR - BR | Door electrical key oscillator (front RH) sensor signal | All doors closed, all doors locked and engine switch off | Alternating between 5 V and below 1 V |
| CLG2 (E58-35) - CG2B (E58-36) | GR - BR | Door electrical key oscillator (front RH) sensor signal | Door unlocked or door open | Below 1 V |
| SEN2 (E58-23) - E (E58-17) | O - W-B | Touch sensor detection signal | Outside door handle touched | Below 1 V |
| SEN2 (E58-23) - E (E58-17) | O - W-B | Touch sensor detection signal | Outside door handle not touched (Have the electrical key outside the cabin) | 10 to 14 V |
| SEL2 (E58-6) - E (E58-17) | P - W-B | Touch sensor activation control signal | Move the key more than 5 m (16.4 ft) away from the front door RH | 10 to 14 V |
| SEL2 (E58-6) - E (E58-17) | P - W-B | Touch sensor activation control signal | Bring it to the outside handle | Below 1 V |
| CLG5 (E58-11) - CG5B (E58-12) | R - W | Indoor electrical key oscillator (front) sensor signal | Within 30 seconds driver side door opened and closed, engine switch off | Alternating between 5 V and below 1 V |
| CLG5 (E58-11) - CG5B (E58-12) | R - W | Indoor electrical key oscillator (front) sensor signal | Engine switch on (IG) | Below 1 V |
| CLG6 (E58-13) - CG6B (E58-14) | Y - B | Indoor electrical key oscillator (rear) sensor signal | Within 30 seconds after driver side door opened and closed, engine switch off | Alternating between 5 V and below 1 V |
| CLG6 (E58-13) - CG6B (E58-14) | Y - B | Indoor electrical key oscillator (rear) sensor signal | Engine switch on (IG) | Below 1 V |
| CLG7 (E58-15) - CG7B (E58-16) | R - W | Luggage electrical key oscillator (inner) sensor signal | Luggage compartment door opening switch ON | Alternating between 5 V and below 1 V |
| CLG7 (E58-15) - CG7B (E58-16) | R - W | Luggage electrical key oscillator (inner) sensor signal | Luggage compartment door opening switch OFF | Below 1 V |
| CLG8 (E58-31) - CG8B (E58-32) | V - P | Luggage electrical key oscillator (outer) sensor signal | Luggage compartment door opening switch ON | Alternating between 5 V and below 1 V |
| CLG8 (E58-31) - CG8B (E58-32) | V - P | Luggage electrical key oscillator (outer) sensor signal | Luggage compartment door opening switch OFF | Below 1 V |
| RC0 (E58-29) - E (E58-17) | G - W-B | Entry door control receiver power source | Engine switch off, all doors closed and electrical key switch on | 4.5 to 5.5 V |
| RC0 (E58-29) - E (E58-17) | G - W-B | Entry door control receiver power source | Engine switch off, all doors closed and electrical key switch off | Below 1 V |
| RSSI (E58-39) - E (E58-17) | R - W-B | Entry door control receiver electric wave existence signal | Engine switch off, all doors closed, the electrical key is not in the action area | 10 to 14 V |

| Symbols (Terminal No.) | Wiring Color | Terminal Description | Condition | Specified Condition |
|---|---|---|---|---|
| RSSI (E58-39) - E (E58-17) | R - W-B | Entry door control receiver electric wave existence signal | Engine switch off, all doors closed, the electrical key is in the action area | Below 1 V |
| RDA (E58-38) - E (E58-17) | Y - W-B | Entry door control receiver data input signal | Engine switch off, all doors closed and electrical key switch off | 10 to 14 V (Pulse generation) |
| RDA (E58-38) - E (E58-17) | Y - W-B | Entry door control receiver data input signal | Engine switch off, all doors closed and electrical key switch on | Pulse generation |
| RDA (E58-38) - Body ground | Y - Body ground | Tuner input signal | Engine switch off, all doors closed, the electrical key is not in the action area | 10 to 14 V (Pulse generation) |
| RDA (E58-38) - Body ground | Y - Body ground | Tuner input signal | The electrical key is in the action area. | Pulse generation |
| ASEL (E58-37) - Body ground | V - Body ground | Cabin / luggage receiver select signal | Engine switch off, luggage compartment door closed and the electrical key is in the luggage action area | 4.6 to 6.0 V |
| ASEL (E58-37) - Body ground | V - Body ground | Cabin / luggage receiver select signal | Engine switch off, luggage compartment door open | Below 1 V |
| VC5 (E58-30) - Body ground | R - Body ground | Transponder key amplifier power supply | Electrical key is not in the cabin. | Below 1 V |
| VC5 (E58-30) - Body ground | R - Body ground | Transponder key amplifier power supply | Have the electrical key outside the cabin and open the driver's door. | 4.5 to 5.5 V |
| TXCT (E58-8) - Body ground | GR - Body ground | Transponder key amplifier output signal | Electrical key is not in the cabin. | Below 1 V |
| TXCT (E58-8) - Body ground | GR - Body ground | Transponder key amplifier output signal | Have the electrical key outside the cabin and open the driver's door. | Pulse generation (see waveform 1) |
| CODE (E58-9) - Body ground | W - Body ground | Transponder key amplifier communication signal | Electrical key is not in the cabin. | Below 1 V |
| CODE (E58-9) - Body ground | W - Body ground | Transponder key amplifier communication signal | Have the electrical key outside the cabin and open the driver's door. Hold the electrical key close to the engine switch with the brake pedal depressed. | Pulse generation (see waveform 2) |
| BZR (E58-21) - Body ground | O - Body ground | Wireless door lock buzzer signal | Wireless door lock buzzer OFF | Below 1 V |
| BZR (E58-21) - Body ground | O - Body ground | Wireless door lock buzzer signal | Wireless door lock buzzer ON | Pulse generation |

If the result is not as specified, the ECU may have a malfunction.

(e) Inspect using an oscilloscope.

**Waveform 1 (Reference):**

| | |
|---|---|
| Terminal | TXCT - Body ground |
| Tool Setting | 2 V/DIV, 10 ms./DIV |
| Condition | Have the electrical key outside the cabin and open the driver's door. |

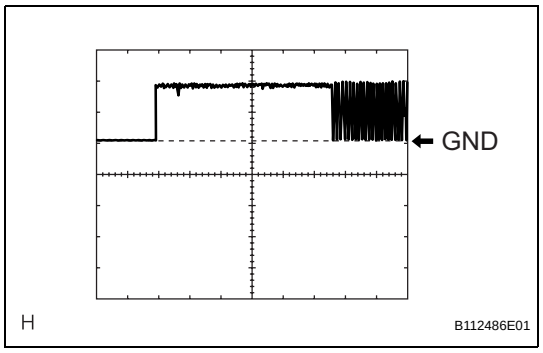


DL

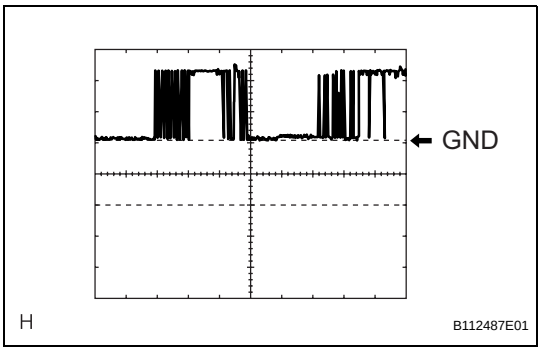


(f) Inspect using an oscilloscope.

**Waveform 2 (Reference):**

| | |
|---|---|
| Terminal | CODE - Body ground |
| Tool Setting | 2 V/DIV, 20 ms./DIV |
| Condition | Have the electrical key outside the cabin and open the driver's door. Hold the electrical key close to the engine switch with the brake pedal depressed. |

**2. MAIN BODY ECU (INSTRUMENT PANEL JUNCTION BLOCK)**

(a) Measure the voltage and resistance according to the value(s) in the table below.

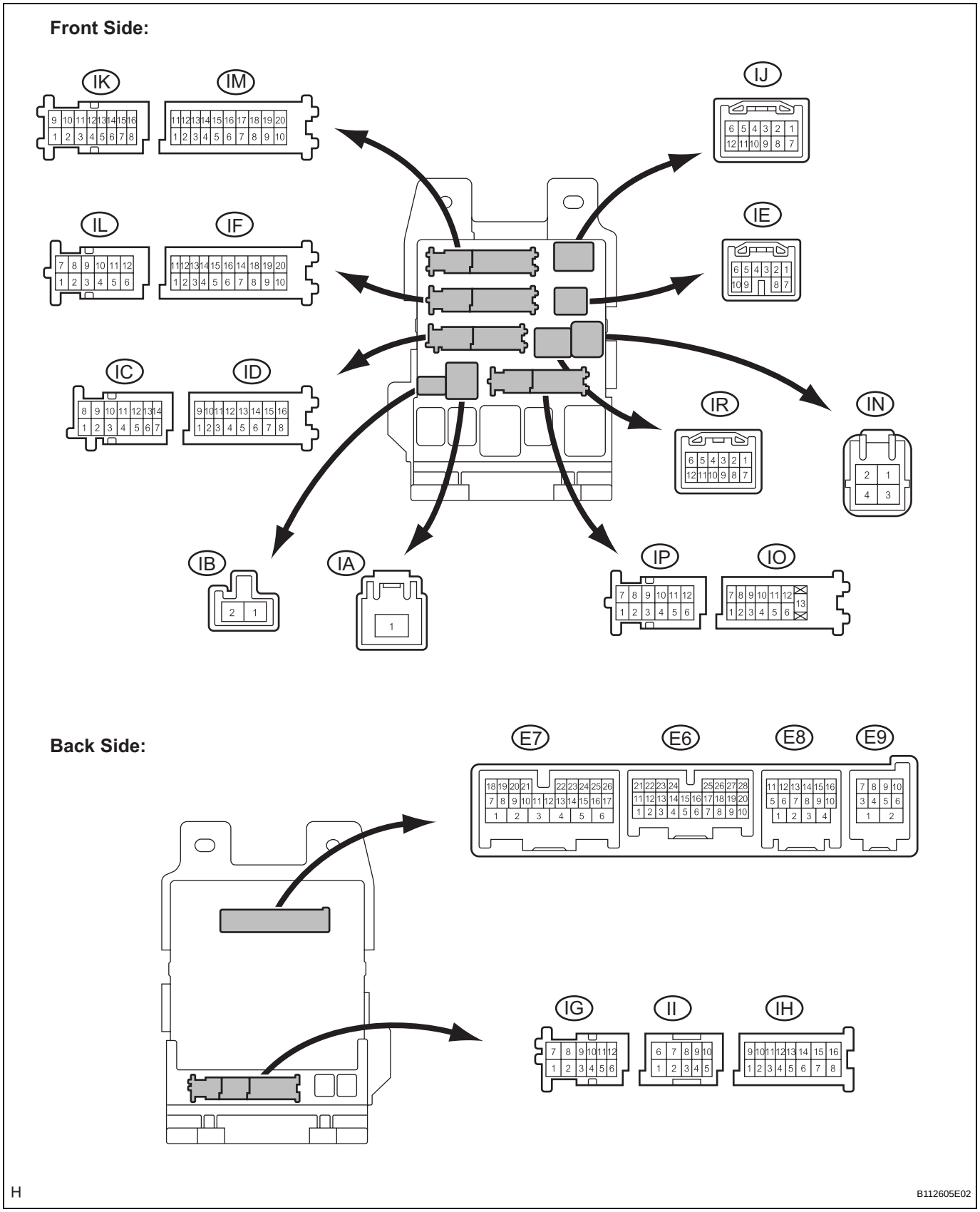

| Symbols (Terminal No.) | Wiring Color | Terminal Description | Condition | Specified Condition |
|---|---|---|---|---|
| CANN (E8-15) - Body ground | W - Body ground | CAN Line | Always | 10 kΩ or higher |
| CANP (E8-16) - Body ground | L - Body ground | CAN Line | Always | 10 kΩ or higher |
| STP (IL-7) - Body ground | L - Body ground | Stop light switch signal | Brake pedal depressed | 10 to 14 V |
| STP (IL-7) - Body ground | L - Body ground | Stop light switch signal | Brake pedal depressed | Below 1 V |

If the result is not as specified, the junction block may have a malfunction.

# DIAGNOSIS SYSTEM

## 1. DESCRIPTION

(a) Smart key system data and the Diagnostic Trouble Codes (DTCs) can be read from the Data Link Connector 3 (DLC3) of the vehicle. When the system seems to be malfunctioning, use the intelligent tester to check for malfunctions and perform repairs.

## 2. CHECK DLC3

The ECU uses ISO 15765-4 for communication. The terminal arrangement of the DLC3 complies with SAE J1962 and matches the ISO 15765-4 format.

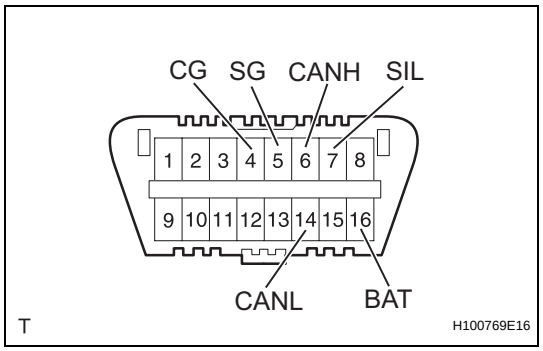


| Symbols (Terminal No.) | Terminal Description | Condition | Specified Condition |
|---|---|---|---|
| SIL (7) - SG (5) | Bus "+" line | During transmission | Pulse generation |
| CG (4) - Body ground | Chassis ground | Always | Below 1 Ω |
| SG (5) - Body ground | Signal ground | Always | Below 1 Ω |
| BAT (16) - Body ground | Battery positive | Always | 11 to 14 V |
| CANH (6) - CANL (14) | CAN bus line | Engine switch OFF* | 54 to 69 Ω |
| CANH (6) - Battery positive (+) | HIGH-level CAN bus line | Engine switch OFF* | 6 kΩ or higher |
| CANH (6) - CG (4) | HIGH-level CAN bus line | Engine switch OFF* | 200 Ω or higher |
| CANL (14) - Battery positive (+) | LOW-level CAN bus line | Engine switch OFF* | 6 kΩ or higher |
| CANL (14) - CG (4) | LOW-level CAN bus line | Engine switch OFF* | 200 Ω or higher |

*: Before measuring the resistance, leave the vehicle for at least 1 minute and do not operate the engine switch, any switches or doors.

If the result is not as specified, the DLC3 may have a malfunction. Repair or replace the harness and connector.

HINT:

Connect the cable of the intelligent tester (with CAN VIM) to the DLC3, turn the engine switch on (IG) and attempt to use the tester. If the display indicates that a communication error has occurred, there is a problem either with the vehicle or with the tester.

- If communication is normal when the tester is connected to another vehicle, inspect the DLC3 of the original vehicle.
- If communication is still not possible when the tester is connected to another vehicle, the problem may be in the tester itself. Consult the Service Department listed in the tester's instruction manual.

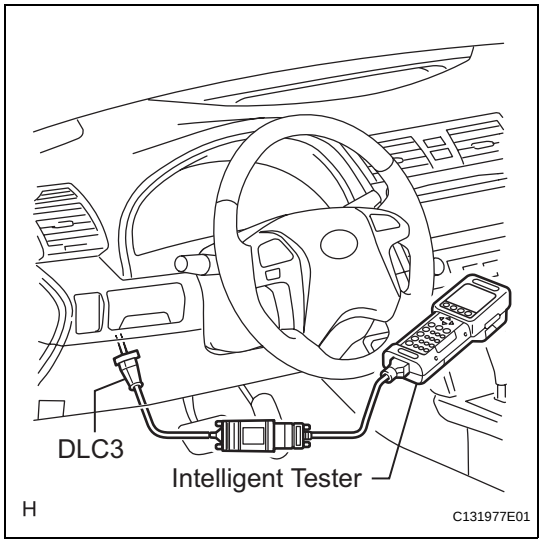

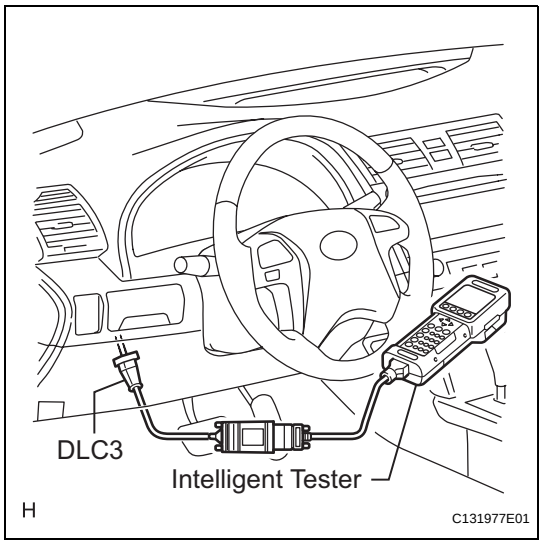


# DTC CHECK / CLEAR

**1. CHECK DTC**

(a) Connect the intelligent tester to the DLC3.
(b) Turn the engine switch on (IG).
(c) Enter the following menu items: DIAGNOSIS / ENHANCED OBD II / DTC INFO / CURRENT CODES.
(d) Read the DTC by following the prompts on the tester screen.
HINT:
Refer to the intelligent tester operator's manual for further details.

**2. CLEAR DTC**

(a) Connect the intelligent tester to the DLC3.
(b) Turn the engine switch on (IG).
(c) Enter the following menu items: DIAGNOSIS / ENHANCED OBD II / DTC INFO / CLEAR CODES.
(d) Erase the DTC by following the directions on the tester screen.

HINT:
Refer to the intelligent tester operator's manual for further details.

# DATA LIST / ACTIVE TEST

**1. READ DATA LIST**

HINT:
Using the intelligent tester's DATA LIST allows switch, sensor, actuator and other item values to be read without removing any parts. Reading the DATA LIST relay in troubleshooting is one way to save time.

(a) Connect the intelligent tester to the DLC3.
(b) Turn the engine switch on (IG). When the intelligent tester cannot be turned on due to a malfunction or other problem, refer to "precautions when using the intelligent tester" (See page DL-118).
(c) Enter the following menus: DIAGNOSIS / ENHANCED OBD II / DATA LIST.
(d) Read the DATA LIST according to the display on the tester.

**SMART ACCESS (Certification ECU):**

| Item | Measurement Item / Range (Display) | Normal Condition | Diagnostic Note |
|---|---|---|---|
| D TOUCH SENSOR | Driver side door touch sensor / ON or OFF | ON: Sensor is touched<br>OFF: Sensor is not touched | - |
| P TOUCH SENSOR | Front passenger side door touch sensor / ON or OFF | ON: Sensor is touched<br>OFF: Sensor is not touched | - |
| D TRIGGER SW | Driver side door lock switch / ON or OFF | ON: Switch is touched<br>OFF: Switch is not touched | - |
| P TRIGGER SW | Front passenger side door lock switch / ON or OFF | ON: Switch is touched<br>OFF: Switch is not touched | - |
| TR/B-DOOR UNLK | Luggage compartment door unlock switch / ON or OFF | ON: Switch is pushed<br>OFF: Switch is not pushed | - |
| IG SW | Engine switch / ON or OFF | ON: Engine switch is on (IG)<br>OFF: Engine switch is off | - |
| ACC SW | Engine switch / ON or OFF | ON: Engine switch is on (ACC)<br>OFF: Engine switch is off | - |
| P/S<br>10-MIN | Power save counter - 10 minutes / Min: 0; Max: 255 | Power save counter after door LOCK/UNLOCK-10 minutes | - |
| P/S<br>5-DAY | Power save counter - 5 days / Min: 0; Max: 255 | Power save counter after door LOCK/UNLOCK-5 days | - |
| P/S<br>14-DAY | Power save counter - 14 days / Min: 0; Max: 255 | Power save counter after door LOCK/UNLOCK-14 days | - |
| UNMATCH V-ID | Unmatched vehicle-ID / YES or NO | YES: Key ID matches vehicle<br>NO: Key ID does not match vehicle | - |
| NO RESPONSE | No response / YES or NO | YES: Response from key<br>NO: No response from key | - |
| UNMATCH FORMAT | Unmatched response code and format / YES or NO | YES: Key ID code matches<br>NO: Key ID code does not match | - |
| LOW BATTERY | Key low battery / YES or NO | YES: Key battery voltage drops<br>NO: Key battery voltage is normal | - |
| WRONG CODE | ID code difference / YES or NO | YES: Key ID code matches<br>NO: Key ID code does not match | - |
| WRONG C CODE | Challenge code difference (Response) / YES or NO | YES: Key ID code matches<br>NO: Key ID code does not match | - |
| WRONG ID CODE | ID code difference / YES or NO | YES: Key ID code matches<br>NO: Key ID code does not match | - |

| Item | Measurement Item / Range (Display) | Normal Condition | Diagnostic Note |
|---|---|---|---|
| WRONG ROL CODE | Rolling code difference / YES or NO | YES: Key rolling code matches<br>NO: Key rolling code does not match | - |
| DOOR UNLOCK MOD | Door unlock mode / ALL, D_DOOR | Mode status is displayed | - |
| FUNCTION CANCEL | Entry door lock function cancel / ON or OFF | Mode status is displayed | - |
| MASTER KEY | Master key / MATCH or NO MATCH | MATCH: Key code is sent<br>NO MATCH: Unmatched key code | - |
| SUB KEY | Sub key / MATCH or NO MATCH | MATCH: Key code is sent<br>NO MATCH: Unmatched key code | - |
| BCC | Transponder chip data / OK or NG | OK: Correct data sensing<br>NG: Incorrect data sensing | - |
| STATUS | Transponder chip data / OK or NG | OK: Data OK<br>NG: Data error | - |
| ENCRYPT CODE | Transponder chip data / OK or NG | OK: Data OK<br>NG: Data error | - |
| SERIAL NUMBER | Transponder chip data / OK or NG | OK: Data OK<br>NG: Data error | - |
| FRAME | Transponder chip data / OK or NG | OK: Data OK<br>NG: Data error | - |
| RESPONSE | Transponder chip data / OK or NG | OK: With no response<br>NG: Those with a response | - |
| #CODE | Diagnostic trouble code / Min.: 0, Max.: 255 | - | - |
| IGNITION AREA | Ignition available area / FRONT or ALL | Customization status is displayed | - |
| PARK WAIT TIME | Parking wait time / 0.5s, 1.5s, 2.5s, 5s | Customization status is displayed | - |
| TRUNK OPEN MODE | Luggage compartment door open mode with vehicle locked / ON or OFF | Customization status is displayed | - |
| KEY LO-BATT WRN | Key low battery warning / ON or OFF | Customization status is displayed | - |

## MAIN BODY:

| Item | Measurement Item / Range (Display) | Normal Condition | Diagnostic Note |
|---|---|---|---|
| LUGG COURTESY SW | Luggage compartment door courtesy light switch signal / ON or OFF | ON: Luggage compartment door open<br>OFF: Luggage compartment door closed | - |
| D DOR CTY SW | Driver side door courtesy light switch signal / ON or OFF | ON: Driver side door open<br>OFF: Driver side door closed | - |
| P DOR CTY SW | Front passenger side door courtesy light switch signal / ON or OFF | ON: Front passenger side door open<br>OFF: Front passenger side door closed | - |
| RL DOR CTY SW | Rear door courtesy light switch LH signal / ON or OFF | ON: Rear door open<br>OFF: Rear door closed | - |
| RR DOR CTY SW | Rear door courtesy light switch RH signal / ON or OFF | ON: Rear door open<br>OFF: Rear door closed | - |
| TRUNK KEY UNLOCK | Luggage compartment door lock/ unlock switch / ON or OFF | ON: Luggage compartment door lock switch is pushed<br>OFF: Luggage compartment door lock switch is not pushed | - |

| Item | Measurement Item / Range (Display) | Normal Condition | Diagnostic Note |
|---|---|---|---|
| IG SW | Engine switch / ON or OFF | ON: Engine switch is on (IG)<br>OFF: Engine switch is off | - |

**METER (Combination Meter):**

| Item | Measurement Item / Range (Display) | Normal Condition | Diagnostic Note |
|---|---|---|---|
| KEY REMND VOLUM | Key reminder buzzer volume condition / LARGE, MEDIUM, SMALL | LARGE: Volume is large<br>MEDIUM: Volume is medium<br>SMALL: Volume is small | - |
| KEY REMND SOUND | Key reminder buzzer sound condition / FAST, NORMAL, SLOW | FAST: Buzz pattern is fast<br>NORMAL: Buzz pattern is normal<br>SLOW: Buzz pattern is slow | - |

**2. PERFORM ACTIVE TEST**

HINT:
Performing the intelligent tester's ACTIVE TEST allows relay, VSV, actuator and other items to be operated without removing any parts. Performing the ACTIVE TEST early in troubleshooting is one way to save time. The DATA LIST can be displayed during the ACTIVE TEST.

(a) Connect the intelligent tester to the DLC3.
(b) Turn the engine switch on (IG).
(c) Enter the following menus: DIAGNOSIS / ENHANCED OBD II / ACTIVE TEST.
(d) Perform the ACTIVE TEST according to the display on the tester.

**SMART ACCESS (Certification ECU):**

| Item | Test Details | Diagnostic Note |
|---|---|---|
| OVERHEAD TUNER | Entry door control receiver ON / OFF | - |
| IN LUG TUNER | Luggage receiver ON / OFF | - |
| D TRANSMITTER | Driver side electrical key oscillator ON / OFF | - |
| P TRANSMITTER | Front passenger side electrical key oscillator ON / OFF | - |
| FR TRANSMITTER | Indoor electrical key oscillator (console) ON / OFF | - |
| RR TRANSMITTER | Indoor electrical key oscillator (rear seat) ON / OFF | - |
| IN_BDR TRNSMTTR | Luggage compartment door inner oscillator ON / OFF | - |
| BDOOR TRNSMTTR | Luggage compartment door outer oscillator ON / OFF | - |
| D SELECT SIG | Driver side select ON / OFF | - |
| P SELECT SIG | Front passenger side select ON / OFF | - |
| WIRELESS BUZZER | Wireless buzzer ON / OFF | - |

**MAIN BODY:**

| Item | Test Details | Diagnostic Note |
|---|---|---|
| TRNK/BDOR OPEN | Luggage compartment open switch signal ON / OFF | - |

# DIAGNOSTIC TROUBLE CODE CHART

HINT:
If a trouble code is indicated during the DTC check, check the circuit listed for that code in the table below. Then proceed to the appropriate page.

**Power door lock control system:**

| DTC No. | Detection Item | Trouble Area | See page |
|---|---|---|---|
| B1242 | Wireless Door Lock Tuner Circuit Malfunction | 1. Electrical key antenna<br>2. Door control receiver<br>3. Wire harness<br>4. Certification ECU | DL-164 |

# ON-VEHICLE INSPECTION

**1. SMART KEY SYSTEM OPERATION INSPECTION**

HINT:

Refer to PROBLEM SYMPTOMS TABLE if the results of the following checks are not normal (See page DL-147).

(a) Check the entry unlock function.

(1) Use the wireless lock operation to lock the doors. With the electrical key in your possession, touch a door's outside handle (touch sensor) and check that the door unlocks.

(b) Check the entry unlock operation's detection area.

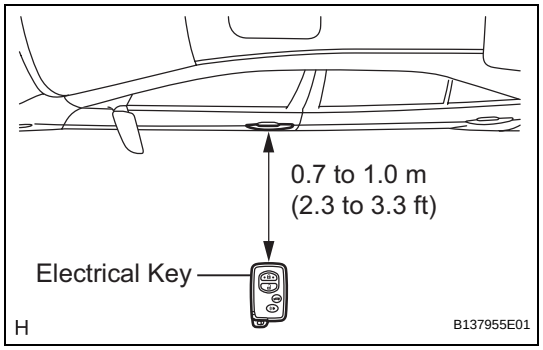


(1) Step 1: Hold the electrical key at the same height as the door's outside handle (approximately 0.8 m (2.6 ft)). Pay attention to the direction of the electrical key in the illustration.

(2) Step 2: When the electrical key is brought within 0.7 to 1.0 m (2.3 to 3.3 ft) of the vehicle, check that the system enters unlock standby mode.

HINT:

Unlock standby mode is signified by the electrical key's red LED illuminating.

(3) Step 3: After the system enters unlock standby mode, touch the outside handle's sensor within 3 seconds. Check that the door unlocks.

**NOTICE:**

**The electrical key cannot communicate with the system within a 0.2 m (0.6 ft) radius of each outside handle.**

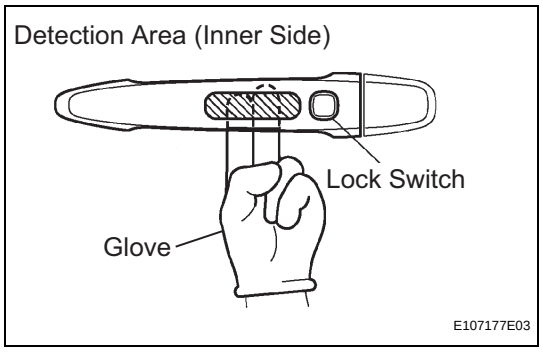


(4) Step 4: Repeat steps 2 and 3 for the remaining doors.

(5) Step 5: Inspect the door electrical key oscillator's response sensitivity. Wear protective gloves, set the system to unlock standby mode, and check that touching the inner side of the outside handle (the highlighted area in the illustration) with your finger causes the door to unlock.

**NOTICE:**

**When touching the highlighted area, tapping too quickly or having extended contact may not trigger the sensor. In such a case, the door will not unlock.**

(6) Step 6: Repeat step 5 for the remaining doors.

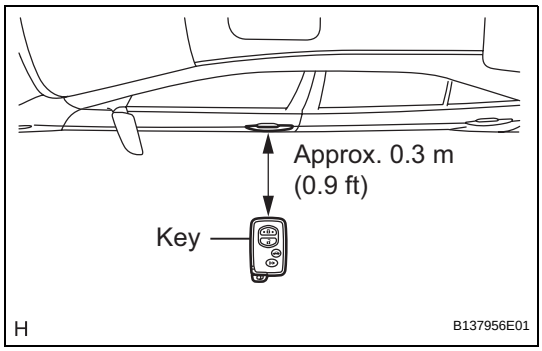


(c) Check the entry lock function.
  (1) Step 1: Close all of the vehicle's doors. With the electrical key in your possession outside the vehicle, check that pressing the lock switch locks the doors.
  (2) Step 2: Inspect the entry lock operation's detection area and the indoor electrical key antenna for wave leaks. Hold the electrical key at a height of 1 m (3.3 ft) (0.1 m (0.3 ft) above the lower edge of the window frame). Pay attention to the direction and position of the electrical key in the illustration. When the electrical key is approximately 0.3 m (0.9 ft) from the vehicle and the lock switch is pressed, check that the all doors lock and the warning buzzer (for when the electrical key is forgotten) does not sound. If the warning buzzer sounds, the indoor electrical key antenna may have a wave leak.
  HINT:
  Do not press the lock switch with the same hand that is holding the electrical key because the electrical key cannot communicate with the system within a 0.2 m (0.6 ft) radius of the outside handle. The doors will not lock.
  (3) Step 3: Repeat steps 1 and 2 for the remaining doors.

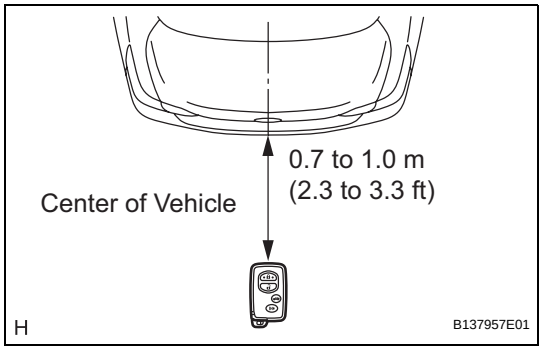


(d) Check the entry luggage compartment door open function.
  (1) Close the luggage compartment door. With the electrical key in your possession, check that pressing the power luggage door open switch opens the luggage compartment door.
  (2) Inspect the entry luggage compartment door open operation's detection area. Hold the electrical key at the same height as the power luggage door open switch (approximately 0.8 m (2.6 ft)) and align the key with the center of the rear of the vehicle. Pay attention to the direction of the electrical key shown in the illustration. When the electrical key is brought within 0.7 to 1.0 m (2.3 to 3.3 ft) of the vehicle, check that pressing the power luggage door open switch opens the luggage compartment door.

(e) Check the entry ignition function.
  (1) When the engine is off:
  With the electrical key in your possession and the brake pedal depressed, check that pressing the engine switch releases the steering wheel lock and starts the engine.
  HINT:
  The engine can be started only when the engine switch indicator illuminates in green.

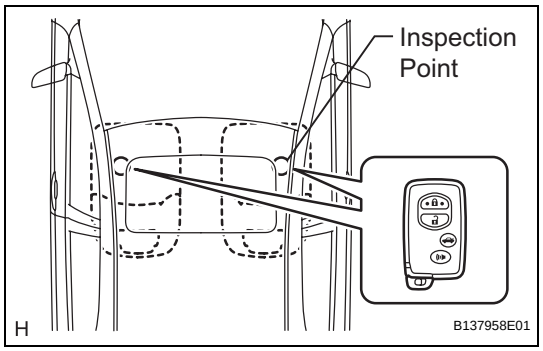


(2) When the engine is running:
With the electrical key in your possession, check that pressing the engine switch stops the engine.
HINT:
The shift position must be P to stop the engine.

(3) Inspect the entry ignition operation's detection area. Pay attention to the direction of the electrical key in the illustration. When the electrical key is in either of the 2 inspection points in the illustration, check that the engine can start.
**NOTICE:**
**The engine cannot be started when the electrical key is on the instrument panel, rear package tray, or in the glove box.**

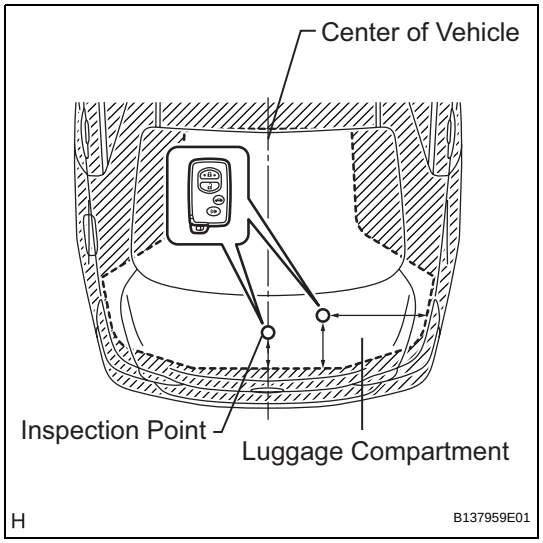


(f) Check the electrical key lock-in prevention function.

(1) Place the electrical key in the luggage compartment with all doors locked. Check that: 1) closing the luggage compartment door triggers the electrical key's wireless buzzer (which lasts approximately 2 seconds), and 2) pressing the power luggage door open switch opens the luggage compartment door.

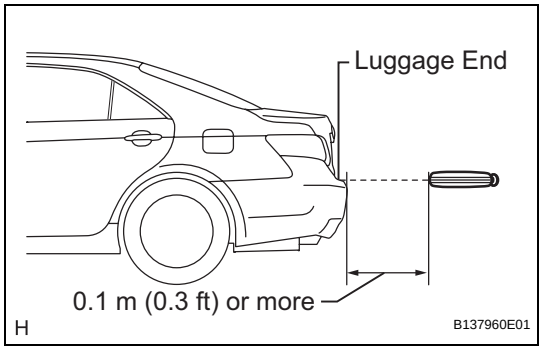


(2) Inspect the electrical key lock-in prevention's detection area. Pay attention to the direction of the electrical key shown in the illustration. When the electrical key is in either of the 2 inspection points in the illustration, check that: 1) closing the luggage compartment door sounds the electrical key's wireless buzzer, and 2) pressing the power luggage door open switch opens the luggage compartment door.
**NOTICE:**
**If the electrical key is inside a metal storage item, such as a metal briefcase or metal box, the electrical key will not be detected by the system.**

(3) Inspect the electrical key lock-in prevention's detection area and the entry door control receiver for wave leaks. Hold the electrical key at the same height as the lower edge of the luggage compartment door and align the key with the center of the rear of the vehicle. Pay attention to the direction and position of the electrical key shown in the illustration. When the electrical key is over 0.1 m (0.3 ft) from the vehicle's rear bumper, check that the electrical key's wireless buzzer does not sound.
If the warning buzzer sounds, the entry door control receiver may have a wave leak.

(g) Check the electrical key cancel function.
(1) While the engine switch is on (IG), check that the power luggage door open switch, entry ignition, electrical key lock-in prevention and warning are the only switch in the smart key system that can be operated.
(2) While the electrical key cancel function (smart key system cancel function) is ON, check that all functions in the smart key system cannot be operated.

(h) Check the answer-back function (hazard warning light flashing and buzzer sounding).

| Entry Operation | Hazard Warning Light | Buzzer |
|---|---|---|
| Entry Door Lock | Flashes once | Sounds once |
| Entry Door Unlock | Flashes twice | Sounds twice |
| Entry Luggage Compartment Door Open | Does not flash | Does not sound |

(i) Check that the electrical key reminder warning buzzer sounds.
(1) Carry the electrical key in the vehicle and close the driver side door. Then turn the engine switch off or on (ACC). The steering lock is unlocked.
(2) Open the driver side door and check that the buzzer sounds intermittently.

(j) Check that the electrical key reminder warning buzzer stops.
(1) When the buzzer is sounding, check that the buzzer stops sounding if either of the following is performed:
- Close the driver side door (front door courtesy light switch is off).
- Turn the engine switch on (IG, ACC) and lock the steering lock.

| DTC | B1242 | Wireless Door Lock Tuner Circuit Malfunction |
|---|---|---|

## DESCRIPTION

- The electrical key antenna and the door control receiver are used as antennas for the entry and wireless door lock functions of the smart key system.
- The certification ECU decodes the requested smart key system operation by identifying a key code based on electric waves received via the electrical key antenna and the door control receiver. The ECU then sends a command, according to the requested operation, to each ECU. (e.g. If door lock operation is requested, the ECU sends a door lock command to the main body ECU.)

| DTC No. | DTC Detection Condition | Trouble Area |
|---|---|---|
| B1242 | If the certification ECU detects that terminal RDA or RSSI is short-circuited, this DTC is stored. | • Electrical key antenna<br>• Door control receiver<br>• Wire harness<br>• Certification ECU |

## WIRING DIAGRAM

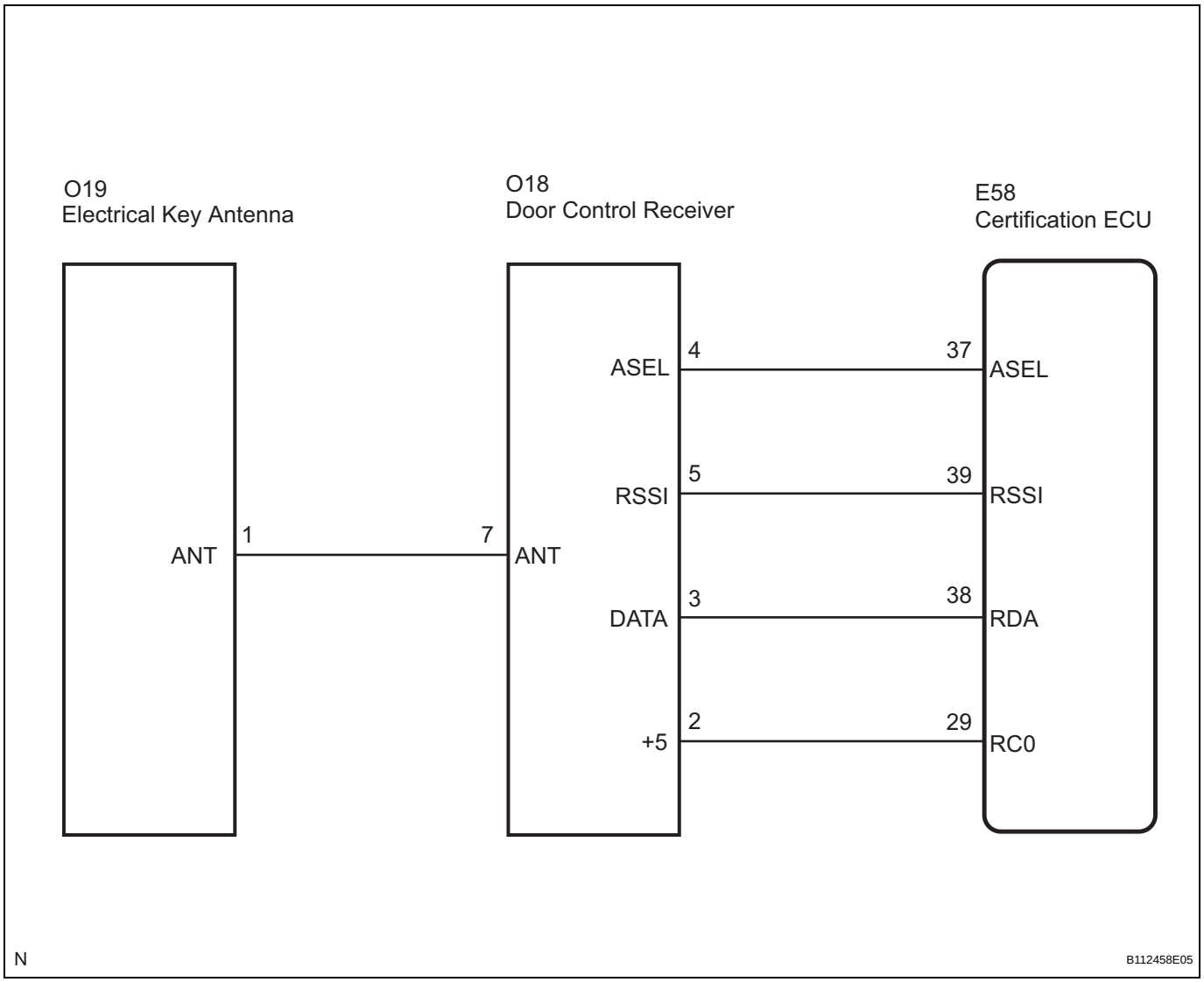


DL

## INSPECTION PROCEDURE

| 1 | CHECK HARNESS AND CONNECTOR (CERTIFICATION ECU - DOOR CONTROL RECEIVER) |
|---|---|

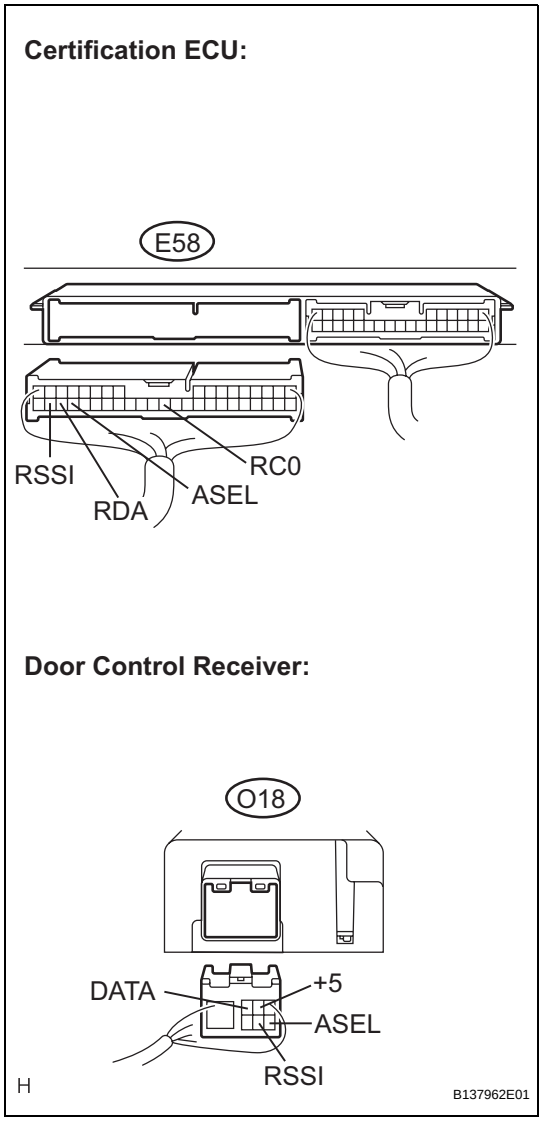


(a) Disconnect the E58 ECU connector.
(b) Disconnect the O18 receiver connector.
(c) Measure the resistance according to the value(s) in the table below.

**Standard resistance**

| Tester Connection (Symbols) | Condition | Specified Condition |
|---|---|---|
| E58-37 (ASEL) - O18-4 (ASEL) | Always | Below 1 Ω |
| E58-39 (RSSI) - O18-5 (RSSI) | Always | Below 1 Ω |
| E58-38 (RDA) - O18-3 (DATA) | Always | Below 1 Ω |
| E58-29 (RC0) - O18-2 (+5) | Always | Below 1 Ω |
| E58-37 (ASEL) - Body ground | Always | 10 kΩ or higher |
| E58-39 (RSSI) - Body ground | Always | 10 kΩ or higher |
| E58-38 (RDA) - Body ground | Always | 10 kΩ or higher |
| E58-29 (RC0) - Body ground | Always | 10 kΩ or higher |

NG → **REPAIR OR REPLACE HARNESS OR CONNECTOR**

OK

## 2 CHECK HARNESS AND CONNECTOR (DOOR CONTROL RECEIVER - ELECTRICAL KEY ANTENNA)

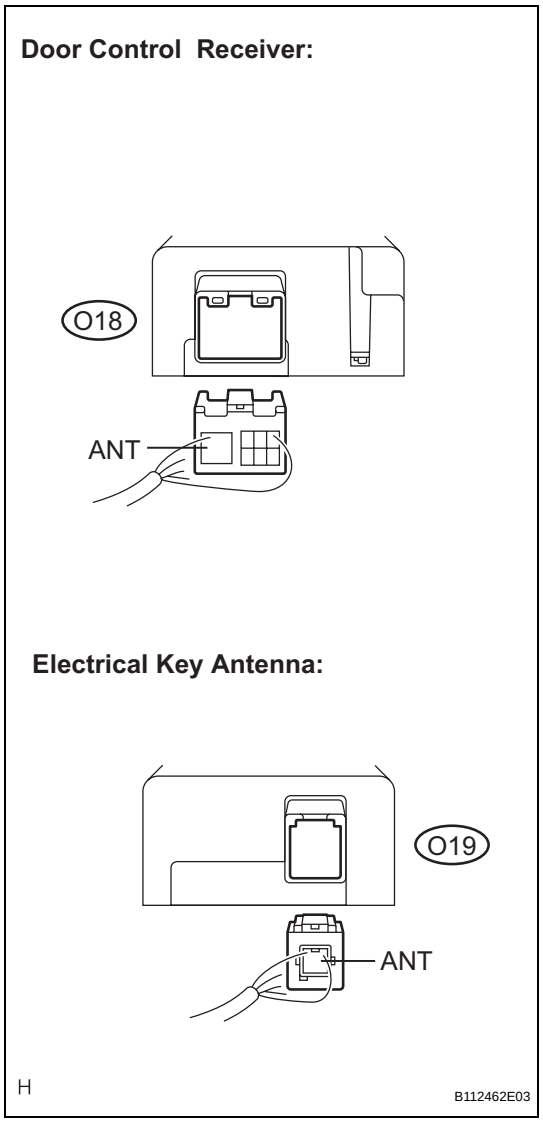


(a) Disconnect the O19 antenna connector.
(b) Measure the resistance according to the value(s) in the table below.
HINT:
Perform the measurement with the O18 receiver connector disconnected.

**Standard resistance**

| Tester Connection (Symbols) | Condition | Specified Condition |
|---|---|---|
| O18-7 (ANT) - O19-1 (ANT) | Always | Below 1 Ω |
| O18-7 (ANT) - Body ground | Always | 10 kΩ or higher |

NG → **REPAIR OR REPLACE HARNESS OR CONNECTOR**

OK

## 3 CHECK AND REPLACE DOOR CONTROL RECEIVER (RECONFIRM DTC)

(a) Replace the receiver.
(b) Clear the DTCs and repeat the procedure to recheck for DTCs (See page DL-156).
**OK:**
**DTC is not output.**

OK → **END (RECEIVER IS DEFECTIVE)**

NG

DL

## 4 CHECK AND REPLACE ELECTRICAL KEY ANTENNA (RECONFIRM DTC)

(a) Replace the antenna.
(b) Clear the DTCs and repeat the procedure to recheck for DTCs (See page DL-156).
**OK:**
**DTC is not output.**

**OK** → **END (ANTENNA IS DEFECTIVE)**

**NG**

## 5 INSPECT CERTIFICATION ECU

**Certification ECU:**

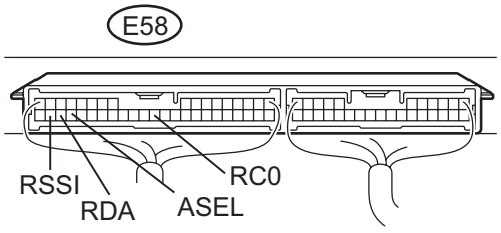


(a) Reconnect the E58 ECU connector.
(b) Reconnect the O19 antenna connector.
(c) Reconnect the O18 receiver connector.
(d) Measure the voltage according to the value(s) in the table below.

**Standard voltage**

| Tester Connection (Symbols) | Condition | Specified Condition |
|---|---|---|
| E58-37 (ASEL) - Body ground | Engine switch OFF, luggage compartment door OPEN | Below 1 V |
| | Engine switch OFF, luggage compartment door CLOSED | 4.5 to 5.5 V |
| E58-39 (RSSI) - Body ground | Engine switch OFF, all doors closed, the electrical key is not in the action area | 10 to 14 V |
| | Engine switch OFF, all doors closed, the electrical key in the action area | Below 1 V |
| E58-38 (RDA) -Body ground | Engine switch OFF, all doors closed and electrical key switch OFF | 10 to 14 V (Pulse generation) |
| | Engine switch OFF, all doors closed and electrical key switch ON | Pulse generation |
| E58-29 (RC0) - Body ground | Engine switch OFF, all doors closed and electrical key switch OFF | Below 1 V |
| | Engine switch OFF, all doors closed and electrical key switch ON | 4.5 to 5.5 V |

**NG** → **REPLACE CERTIFICATION ECU**

**OK**

**PROCEED TO NEXT CIRCUIT INSPECTION SHOWN IN PROBLEM SYMPTOMS TABLE**

# Door Oscillator Circuit

## DESCRIPTION

Door oscillators are built into each door. Each of them forms its own action area around its door and detects the presence of the electrical key.

## WIRING DIAGRAM

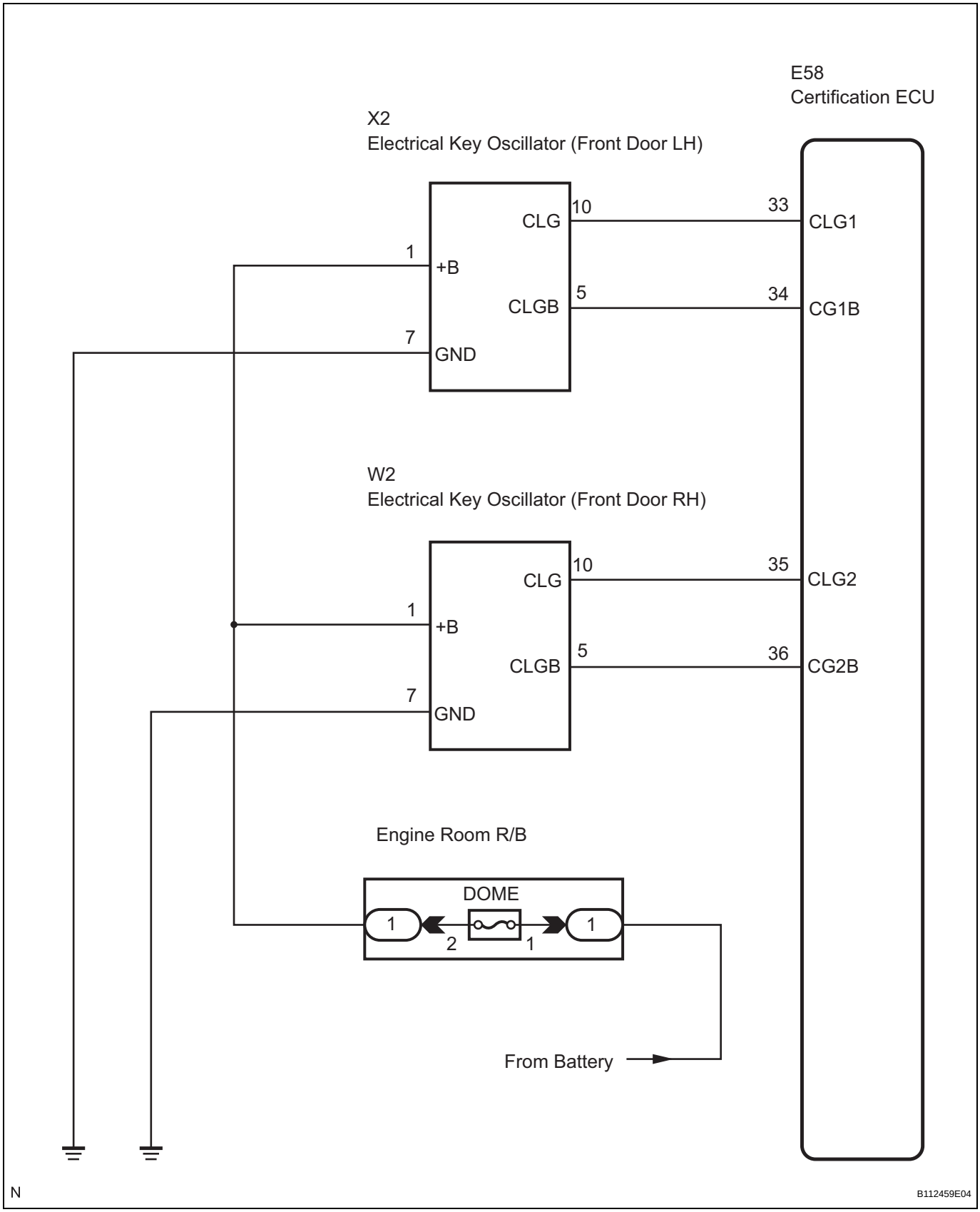

## INSPECTION PROCEDURE

| 1 | INSPECT ELECTRICAL KEY OSCILLATOR |
|---|---|

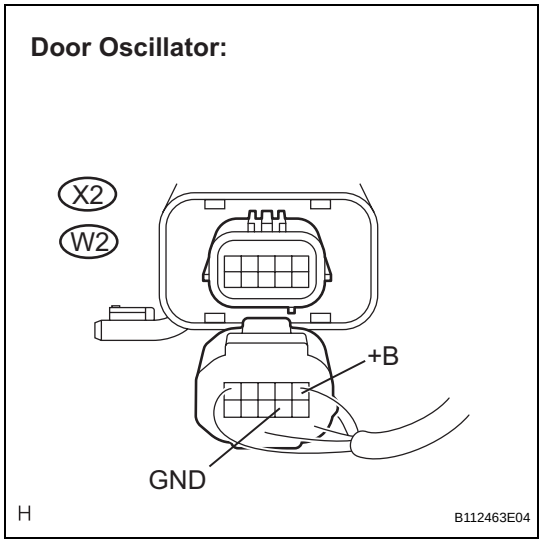


(a) Disconnect the oscillator connectors.
(b) Measure the voltage according to the value(s) in the table below.

**Standard voltage:**

**Front LH side**

| Tester Connection (Symbols) | Condition | Specified Condition |
|---|---|---|
| X2-1 (+B) - X2-7 (GND) | Always | 10 to 14 V |

**Front RH side**

| Tester Connection (Symbols) | Condition | Specified Condition |
|---|---|---|
| W2-1 (+B) - W2-7 (GND) | Always | 10 to 14 V |

**NG** → **REPAIR OR REPLACE HARNESS OR CONNECTOR**

**OK**

| 2 | CHECK HARNESS AND CONNECTOR (ELECTRICAL KEY OSCILLATOR - CERTIFICATION ECU) |
|---|---|

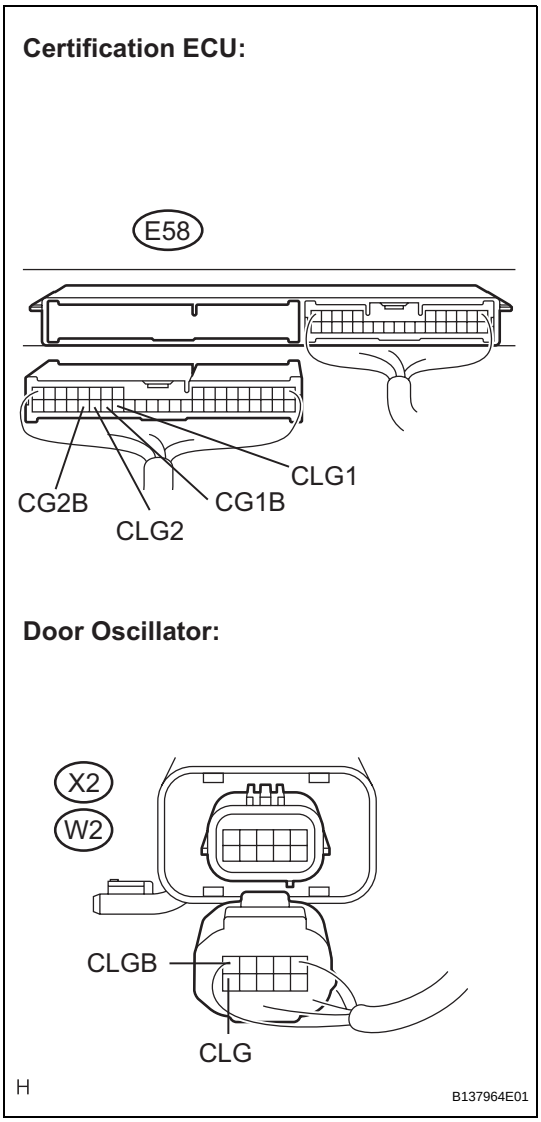


(a) Disconnect the E58 ECU connector.

**Standard resistance**

| Tester Connection (Symbols) | Condition | Specified Condition |
|---|---|---|
| E58-33 (CLG1) - X2-10 (CLG) | Always | Below 1 Ω |
| E58-34 (CG1B) - X2-5 (CLGB) | Always | Below 1 Ω |
| E58-35 (CLG2) - W2-10 (CLG) | Always | Below 1 Ω |
| E58-36 (CG2B) - W2-5 (CLGB) | Always | Below 1 Ω |
| E58-33 (CLG1) - Body ground | Always | 10 kΩ or higher |
| E58-34 (CG1B) - Body ground | Always | 10 kΩ or higher |
| E58-35 (CLG2) - Body ground | Always | 10 kΩ or higher |
| E58-36 (CG2B) - Body ground | Always | 10 kΩ or higher |

NG → **REPAIR OR REPLACE HARNESS OR CONNECTOR**

OK

DL

| 3 | CHECK AND REPLACE ELECTRICAL KEY OSCILLATOR (CHECK OPERATION OF OSCILLATOR) |
|---|---|

(a) Replace the door oscillator.
(b) Check that the entry LOCK/UNLOCK function operates normally.

**OK:**

**Entry LOCK/UNLOCK function operates normally.**

OK → **END (ELECTRICAL KEY OSCILLATOR IS DEFECTIVE)**

NG

| 4 | PERFORM ACTIVE TEST BY INTELLIGENT TESTER (CERTIFICATION ECU OUTPUT SIGNAL) |
|---|---|

**Certification ECU:**

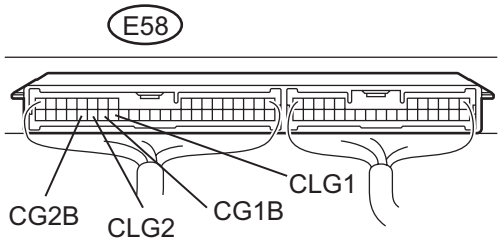


H B137963E02

(a) Reconnect the ECU and the oscillator connectors.
(b) Connect the intelligent tester to the DLC3.
(c) Turn the engine switch on (IG).
(d) Enter the following menus: DIAGNOSIS / ENHANCED OBD II / ACTIVE TEST.
(e) Following the display on the tester, select the "ACTIVE TEST".
**SMART ACCESS (Certification ECU):**

| Item | Vehicle Condition/Test Details |
|---|---|
| D TRANSMITTER | Door Oscillator ON/OFF |
| P TRANSMITTER | Door Oscillator ON/OFF |

(f) Measure the frequency according to the value(s) in the table below.
**Standard**

| Tester Connection (Symbols) | Condition | Specified Condition |
|---|---|---|
| E58-33 (CLG1) - E58-34 (CG1B) | During ACTIVE TEST | Frequency is generated (higher than 0 Hz) |
| E58-35 (CLG2) - E58-36 (CG2B) | During ACTIVE TEST | Frequency is generated (higher than 0 Hz) |

NG → **REPLACE CERTIFICATION ECU**

OK

**PROCEED TO NEXT CIRCUIT INSPECTION SHOWN IN PROBLEM SYMPTOMS TABLE**

# Entry Lock Switch Circuit

## DESCRIPTION

The entry lock switches (trigger switch) are built into the outside handles of the LH/RH door. The certification ECU detects the conditions of the each lock switch.

## WIRING DIAGRAM

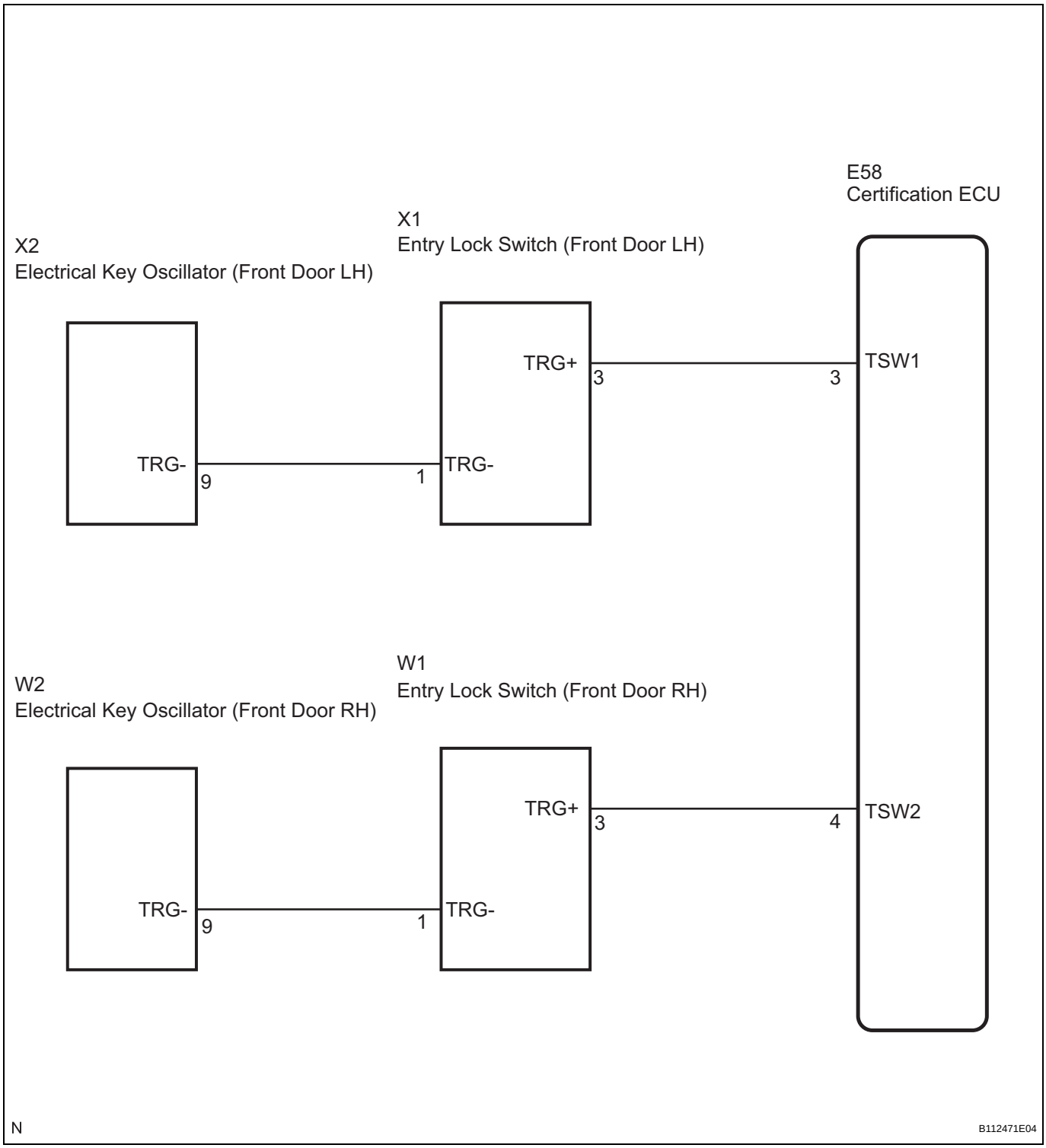

## INSPECTION PROCEDURE

| 1 | INSPECT ENTRY LOCK SWITCH |
|---|---|

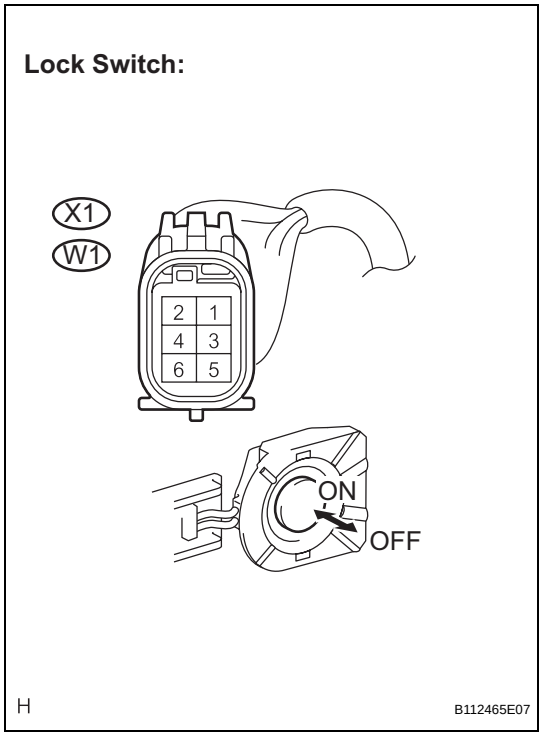


(a) Remove the outside handle.
(b) Disconnect the connectors.
(c) Measure the resistance according to the value(s) in the table below.

**Standard resistance**

| Tester Connection (Symbols) | Condition | Specified Condition |
|---|---|---|
| X1-1 (TRG-) - X1-3 (TRG+) | Lock switch not pushed | 10 kΩ or higher |
| | Lock switch pushed | Below 1 Ω |
| W1-1 (TRG-) - W1-3 (TRG+) | Lock switch not pushed | 10 kΩ or higher |
| | Lock switch pushed | Below 1 Ω |

NG → **REPLACE OUTSIDE HANDLE ASSEMBLY**

OK

| 2 | CHECK HARNESS AND CONNECTOR (CERTIFICATION ECU - ENTRY LOCK SWITCH) |
|---|---|

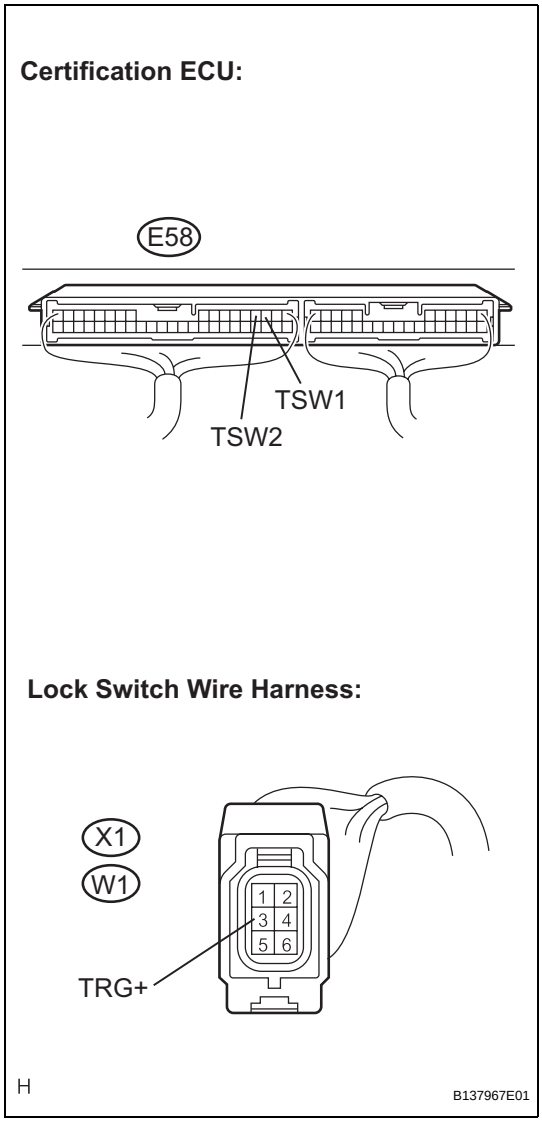


(a) Disconnect the E58 ECU connector.

(b) Measure the resistance according to the value(s) in the table below.

**Standard resistance**

| Tester Connection (Symbols) | Condition | Specified Condition |
|---|---|---|
| E58-3 (TSW1) - X1-3 (TRG+) | Always | Below 1 Ω |
| E58-4 (TSW2) - W1-3 (TRG+) | Always | Below 1 Ω |
| E58-3 (TSW1) - Body ground | Always | 10 kΩ or higher |
| E58-4 (TSW2) - Body ground | Always | 10 kΩ or higher |

**NG** → **REPAIR OR REPLACE HARNESS OR CONNECTOR**

**OK**

## 3 CHECK HARNESS AND CONNECTOR (ELECTRICAL KEY OSCILLATOR - ENTRY LOCK SWITCH)

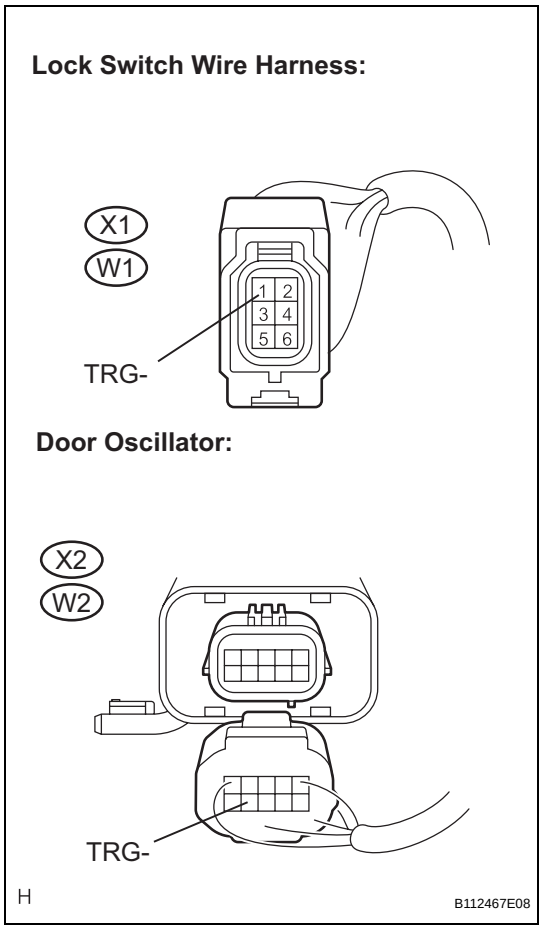


(a) Disconnect the door oscillator connector.
(b) Measure the resistance according to the value(s) in the table below.

**Standard resistance**

| Tester Connection (Symbols) | Condition | Specified Condition |
|---|---|---|
| X2-9 (TRG-) - X1-1 (TRG-) | Always | Below 1 Ω |
| W2-9 (TRG-) - W1-1 (TRG-) | Always | Below 1 Ω |
| X2-9 (TRG-) - Body ground | Always | 10 kΩ or higher |
| W2-9 (TRG-) - Body ground | Always | 10 kΩ or higher |

NG → **REPAIR OR REPLACE HARNESS OR CONNECTOR**

OK

## 4 CHECK AND REPLACE ELECTRICAL KEY OSCILLATOR

(a) Replace the electrical key oscillator.
(b) Check that the entry LOCK/UNLOCK function operates normally.

**OK:**

**Entry LOCK/UNLOCK function operates normally.**

NG → **PROCEED TO NEXT CIRCUIT INSPECTION SHOWN IN PROBLEM SYMPTOMS TABLE**

OK

**END (ELECTRICAL KEY OSCILLATOR IS DEFECTIVE)**

# Touch Sensor Circuit

## DESCRIPTION

This circuit receives a signal indicating whether a touch sensor signal is detected.

## WIRING DIAGRAM

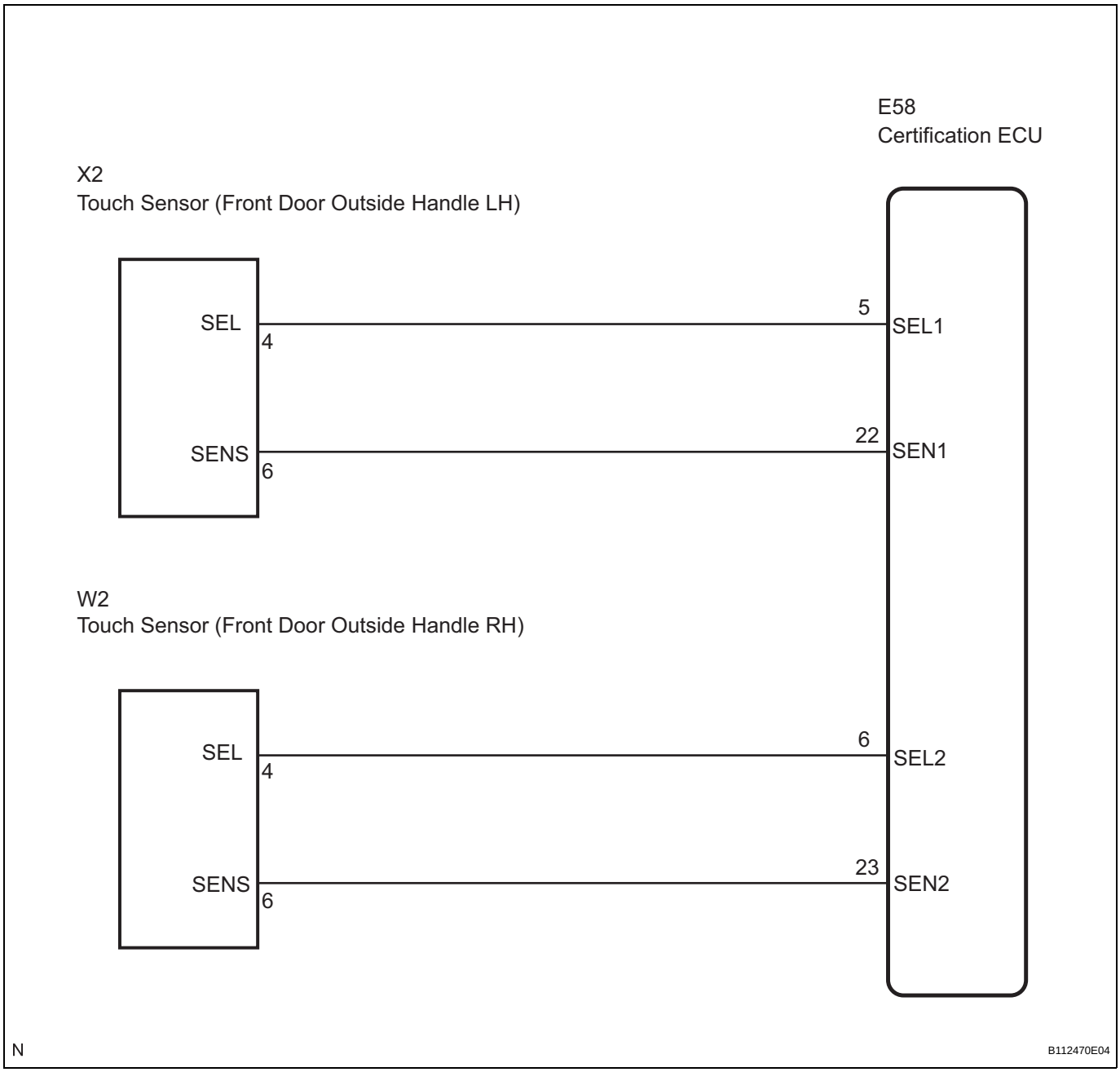


## INSPECTION PROCEDURE

| 1 | READ VALUE OF INTELLIGENT TESTER |
|---|---|

(a) Connect the intelligent tester to the DLC3.
(b) Turn the engine switch on (IG).

(c) Following the display on the tester, select "DATA LIST".

**SMART ACCESS (Certification ECU):**

| Item | Measurement Item/Range (Display) | Normal Condition | Diagnostic Note |
|---|---|---|---|
| D TOUCH SENSOR | Status of touch sensor front LH/ ON or OFF | ON: Touch sensor is touched<br>OFF: Touch sensor is not touched | - |
| P TOUCH SENSOR | Status of touch sensor front RH/ ON or OFF | ON: Touch sensor is touched<br>OFF: Touch sensor is not touched | - |

**OK:**
**"ON" (screen is touched) or "OFF" (screen is not touched) appears on the tester screen.**

**OK** → **PROCEED TO NEXT CIRCUIT INSPECTION SHOWN IN PROBLEM SYMPTOMS TABLE**

**NG**

## 2 CHECK HARNESS AND CONNECTOR (CERTIFICATION ECU - ELECTRICAL KEY OSCILLATOR)

**Certification ECU:**

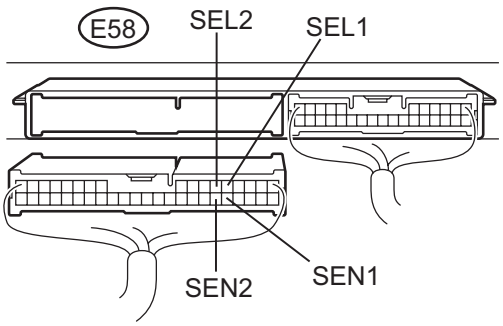


**Door Oscillator:**

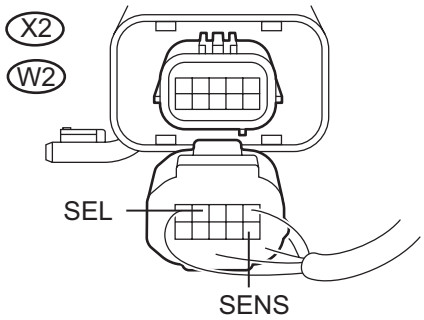


H B137964E02

(a) Disconnect the E58 ECU connector.
(b) Disconnect the oscillator connectors.

**Standard resistance**

| Tester Connection (Symbols) | Condition | Specified Condition |
|---|---|---|
| E58-5 (SEL1) - X2-4 (SEL) | Always | Below 1 Ω |
| E58-22 (SEN1) - X2-6 (SENS) | Always | Below 1 Ω |
| E58-6 (SEL2) - W2-4 (SEL) | Always | Below 1 Ω |
| E58-23 (SEN2) - W2-6 (SENS) | Always | Below 1 Ω |
| E58-5 (SEL1) - Body ground | Always | 10 kΩ or higher |
| E58-22 (SEN1) - Body ground | Always | 10 kΩ or higher |
| E58-6 (SEL2) - Body ground | Always | 10 kΩ or higher |
| E58-23 (SEN2) - Body ground | Always | 10 kΩ or higher |

**NG** → **REPAIR OR REPLACE HARNESS OR CONNECTOR**

OK

| 3 | CHECK AND REPLACE ELECTRICAL KEY OSCILLATOR (CHECK OPERATION OF OSCILLATOR) |
|---|---|

(a) Replace the door oscillator.
(b) Check that the entry UNLOCK function operates normally.
**OK:**
**Entry UNLOCK function operates normally.**

NG → **END (ELECTRICAL KEY OSCILLATOR IS DEFECTIVE)**

OK

| 4 | INSPECT CERTIFICATION ECU |
|---|---|

**Certification ECU:**

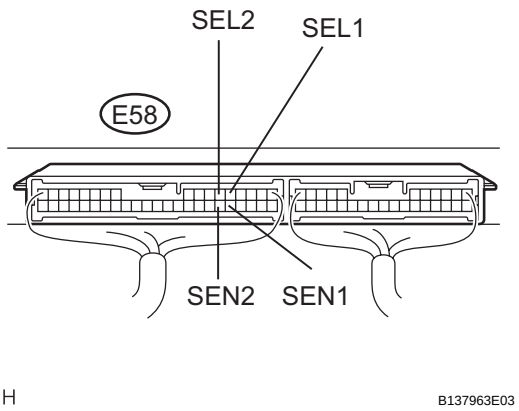


(a) Reconnect the ECU and the oscillator connectors.
(b) Connect the intelligent tester to the DLC3.
(c) Turn the engine switch on (IG).
(d) Measure the voltage according to the value(s) in the table below.
**Standard voltage**

| Tester Connection (Symbols) | Condition | Specified Condition |
|---|---|---|
| E58-5 (SEL1) - Body ground | Move the key more than 5 m (16.4 ft) away from the front door LH | 10 to 14 V |
| E58-5 (SEL1) - Body ground | Bring it to the outside handle | Below 1 V |
| E58-6 (SEL2) - Body ground | Move the key more than 5 m (16.4 ft) away from the front door RH | 10 to 14 V |
| E58-6 (SEL2) - Body ground | Bring it to the outside handle | Below 1 V |
| E58-22 (SEN1) - Body ground | Front door LH outside handle is not held (Bring the electrical key to the outside handle) | 10 to 14 V |
| E58-22 (SEN1) - Body ground | Front door LH outside handle is held | Below 1 V |
| E58-23 (SEN2) - Body ground | Front door RH outside handle is not held (Bring the electrical key to the outside handle) | 10 to 14 V |
| E58-23 (SEN2) - Body ground | Front door RH outside handle is held | Below 1 V |

NG → **REPLACE CERTIFICATION ECU**

OK

**PROCEED TO NEXT CIRCUIT INSPECTION SHOWN IN PROBLEM SYMPTOMS TABLE**

# Antenna Circuit

## DESCRIPTION

Terminals ANT1 and ANT2 of the antenna (door outside handle) detect if the electrical key is within the action area around the door outside handle.

## WIRING DIAGRAM

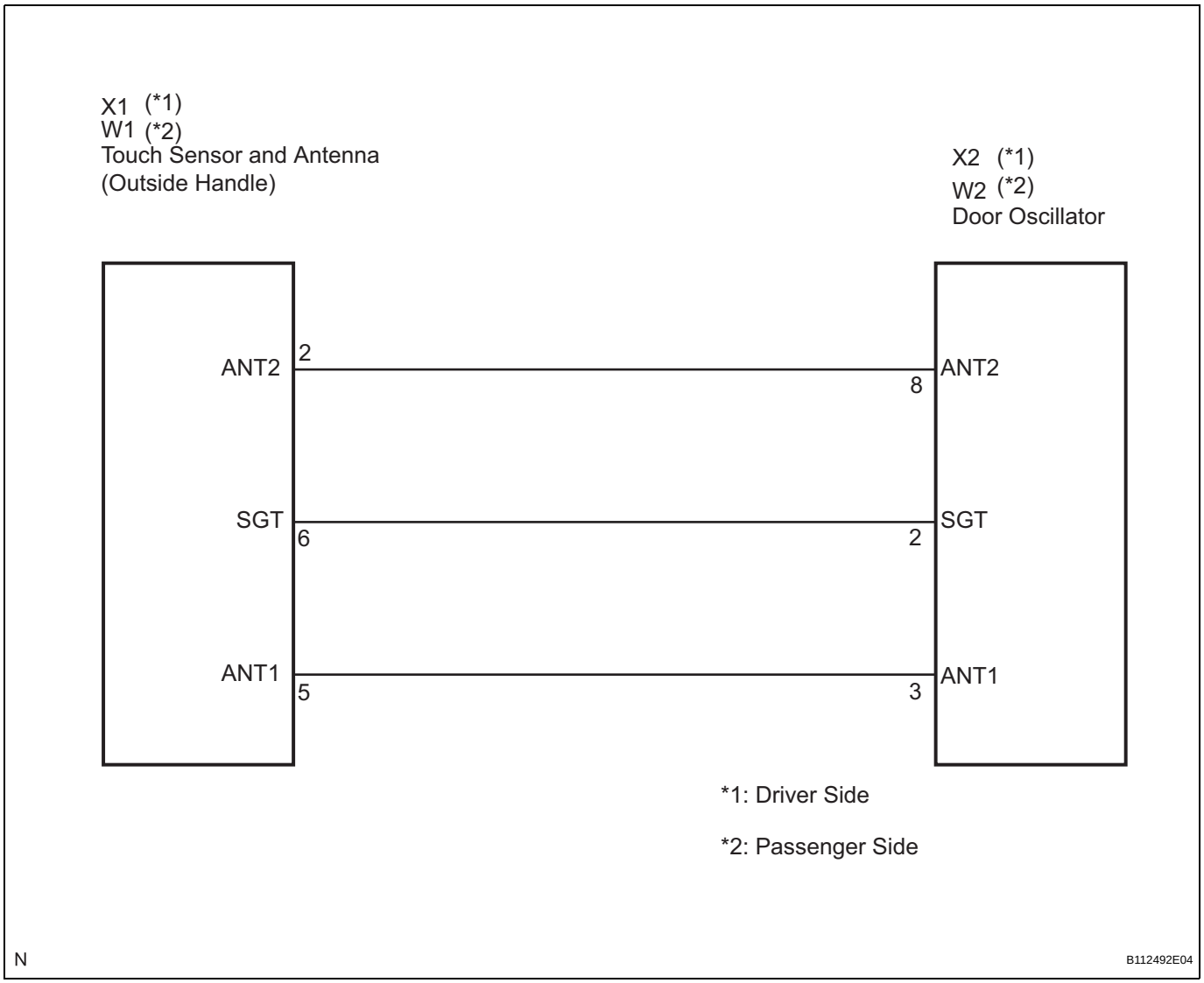

## INSPECTION PROCEDURE

### 1 CHECK HARNESS AND CONNECTOR (ELECTRICAL KEY OSCILLATOR - ANTENNA)

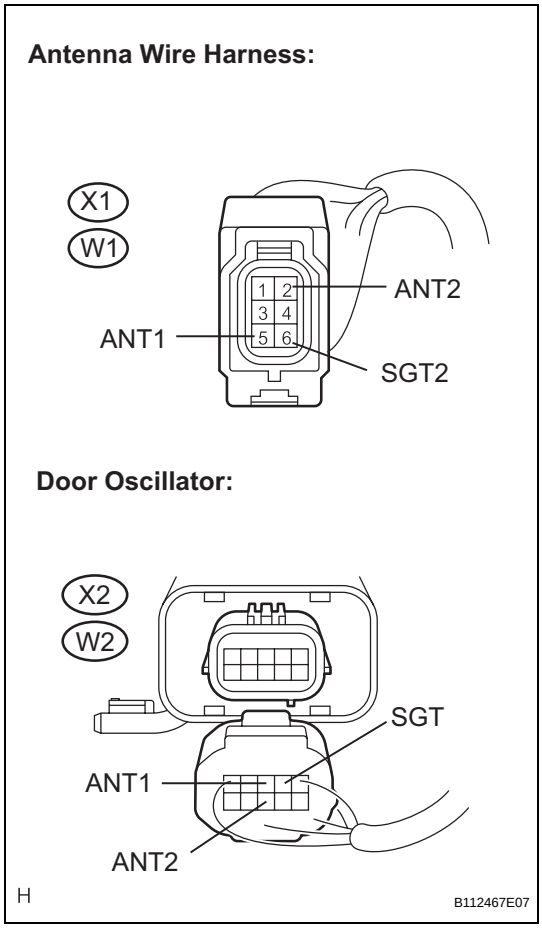


(a) Remove the outside handle.
(b) Disconnect the antenna and door oscillator connectors.
(c) Measure the resistance according to the value(s) in the table below.

**Standard resistance**

| Tester Connection (Symbols) | Condition | Specified Condition |
|---|---|---|
| X1-2 (ANT2) - X2-8 (ANT2) (*1) | Always | Below 1 Ω |
| X1-6 (SGT) - X2-2 (SGT) (*1) | Always | Below 1 Ω |
| X1-5 (ANT1) - X2-3 (ANT1) (*1) | Always | Below 1 Ω |
| X1-2 (ANT2) - Body ground (*1) | Always | 10 kΩ or higher |
| X1-6 (SGT) - Body ground (*1) | Always | 10 kΩ or higher |
| X1-5 (ANT1) - Body ground (*1) | Always | 10 kΩ or higher |
| W1-2 (ANT2) - W2-8 (ANT2) (*2) | Always | Below 1 Ω |
| W1-6 (SGT) - W2-2 (SGT) (*2) | Always | Below 1 Ω |
| W1-5 (ANT1) - W2-3 (ANT1) (*2) | Always | Below 1 Ω |
| W1-2 (ANT2) - Body ground (*2) | Always | 10 kΩ or higher |
| W1-6 (SGT) - Body ground (*2) | Always | 10 kΩ or higher |
| W1-5 (ANT1) - Body ground (*2) | Always | 10 kΩ or higher |

*1: Driver side
*2: Passenger side

NG → **REPAIR OR REPLACE HARNESS OR CONNECTOR**

OK

### 2 CHECK AND REPLACE DOOR OUTSIDE HANDLE

(a) Replace the door outside handle.
(b) Check that the entry LOCK/UNLOCK function operates normally.
**OK:**
**Entry LOCK/UNLOCK function operates normally.**

NG → **PROCEED TO NEXT CIRCUIT INSPECTION SHOWN IN PROBLEM SYMPTOMS TABLE**

OK

**END (DOOR OUTSIDE HANDLE IS DEFECTIVE)**

# Luggage Oscillator Circuit

## DESCRIPTION

The certification ECU activates the inner and outer luggage compartment oscillators. The power is supplied from the certification ECU to both the inner and outer luggage compartment oscillators. The inner and outer luggage compartment oscillator circuits have the same wiring. If the entry luggage compartment function has a problem, check both the inner and outer luggage compartment oscillator circuits.

## WIRING DIAGRAM

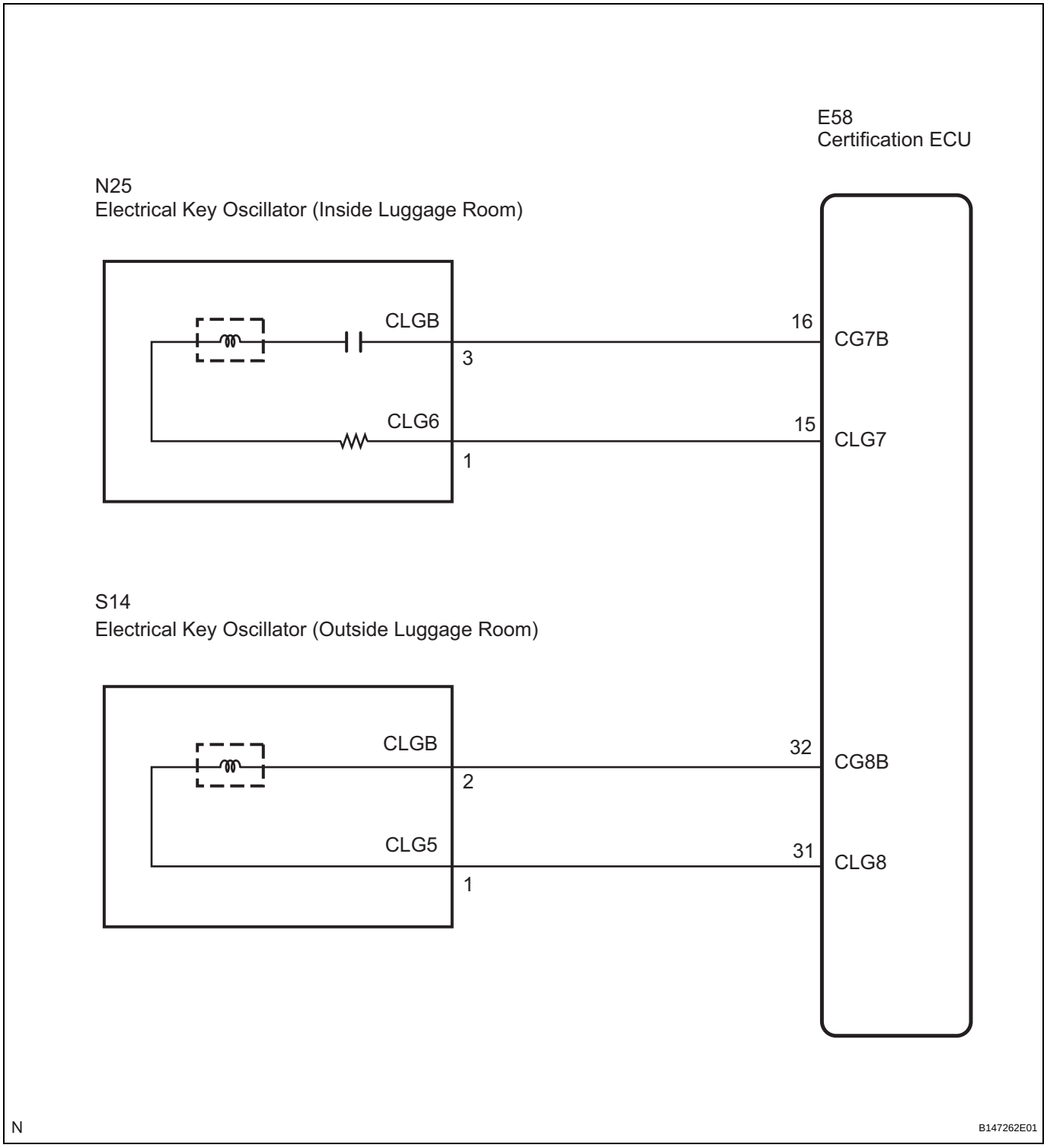


DL

## INSPECTION PROCEDURE

| 1 | CHECK HARNESS AND CONNECTOR (CERTIFICATION ECU - ELECTRICAL KEY OSCILLATOR) |
|---|---|

**Certification ECU:**

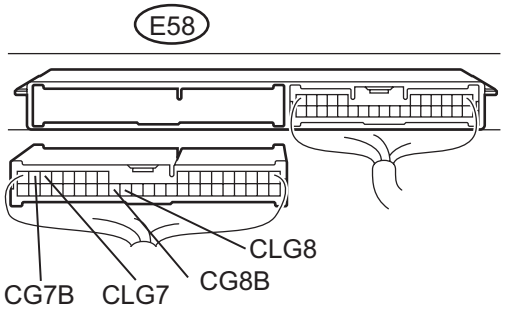


**Electrical Key Oscillator**

**(Inside Luggage Compartment):**

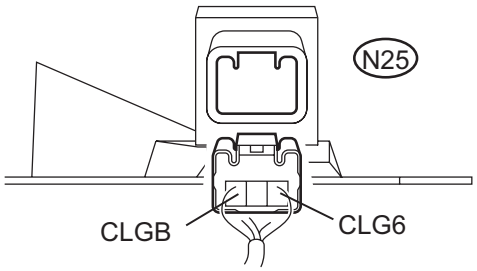


**Electrical Key Oscillator**

**(Outside Luggage Compartment):**

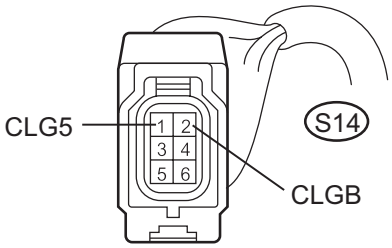


H

B137965E01

(a) Disconnect the E58 ECU connector.
(b) Disconnect the oscillator connectors.
(c) Measure the resistance according to the value(s) in the table below.

**Standard resistance**

| Tester Connection (Symbols) | Condition | Specified Condition |
|---|---|---|
| E58-16 (CG7B) - N25-3 (CLGB) | Always | Below 1 Ω |
| E58-15 (CLG7) - N25-1 (CLG6) | Always | Below 1 Ω |
| E58-32 (CG8B) - S14-2 (CLGB) | Always | Below 1 Ω |
| E58-31 (CLG8) - S14-1 (CLG5) | Always | Below 1 Ω |
| E58-16 (CG7B) - Body ground | Always | 10 kΩ or higher |
| E58-15 (CLG7) - Body ground | Always | 10 kΩ or higher |
| E58-32 (CG8B) - Body ground | Always | 10 kΩ or higher |
| E58-31 (CLG8) - Body ground | Always | 10 kΩ or higher |

**NG** → **REPAIR OR REPLACE HARNESS OR CONNECTOR**

**OK**

DL

## 2 CHECK AND REPLACE ELECTRICAL KEY OSCILLATOR

(a) Replace the electrical key oscillator.
(b) Check that the luggage compartment door entry LOCK/UNLOCK function operates normally.
**OK:**
**Luggage compartment door entry LOCK/UNLOCK function operates normally.**

**OK** → **END (ELECTRICAL KEY OSCILLATOR IS DEFECTIVE)**

**NG**

## 3 PERFORM ACTIVE TEST BY INTELLIGENT TESTER

**Certification ECU:**

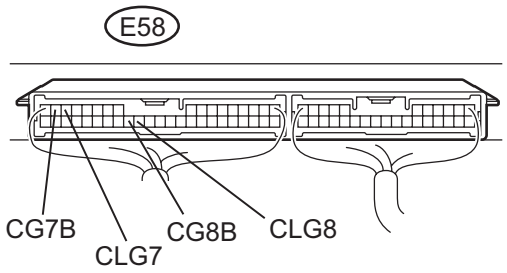


(a) Reconnect the oscillator and the ECU connectors.
(b) Connect the intelligent tester to the DLC3.
(c) Turn the engine switch on (IG).
(d) Following the display on the tester, select the "ACTIVE TEST".
**SMART ACCESS (Certification ECU):**

| Item | Vehicle Condition/Test Details |
|---|---|
| IN-BDR TRNSMTTR | Electrical key oscillator (Luggage compartment inner) ON/OFF |
| BDOOR TRNSMTTR | Electrical key oscillator (Luggage compartment outer) ON/OFF |

(e) Measure the frequency according to the value(s) in the table below.
**Standard**

| Tester Connection (Symbols) | Condition | Specified Condition |
|---|---|---|
| E58-16 (CG7B) - E58-15 (CLG7) | During ACTIVE TEST | Frequency is generated (higher than 0 Hz) |
| E58-32 (CG8B) - E58-31 (CLG8) | During ACTIVE TEST | Frequency is generated (higher than 0 Hz) |

**NG** → **REPLACE CERTIFICATION ECU**

**OK**

**PROCEED TO NEXT CIRCUIT INSPECTION SHOWN IN PROBLEM SYMPTOMS TABLE**

# Room Oscillator Circuit

## DESCRIPTION

The certification ECU activates the front and rear cabin oscillators. The power is supplied from the certification ECU to both the front and rear cabin oscillators. The front and rear cabin oscillator circuits have the same wiring. If the smart key system does not operate properly inside the vehicle, check both the front and rear cabin oscillator circuits.

## WIRING DIAGRAM

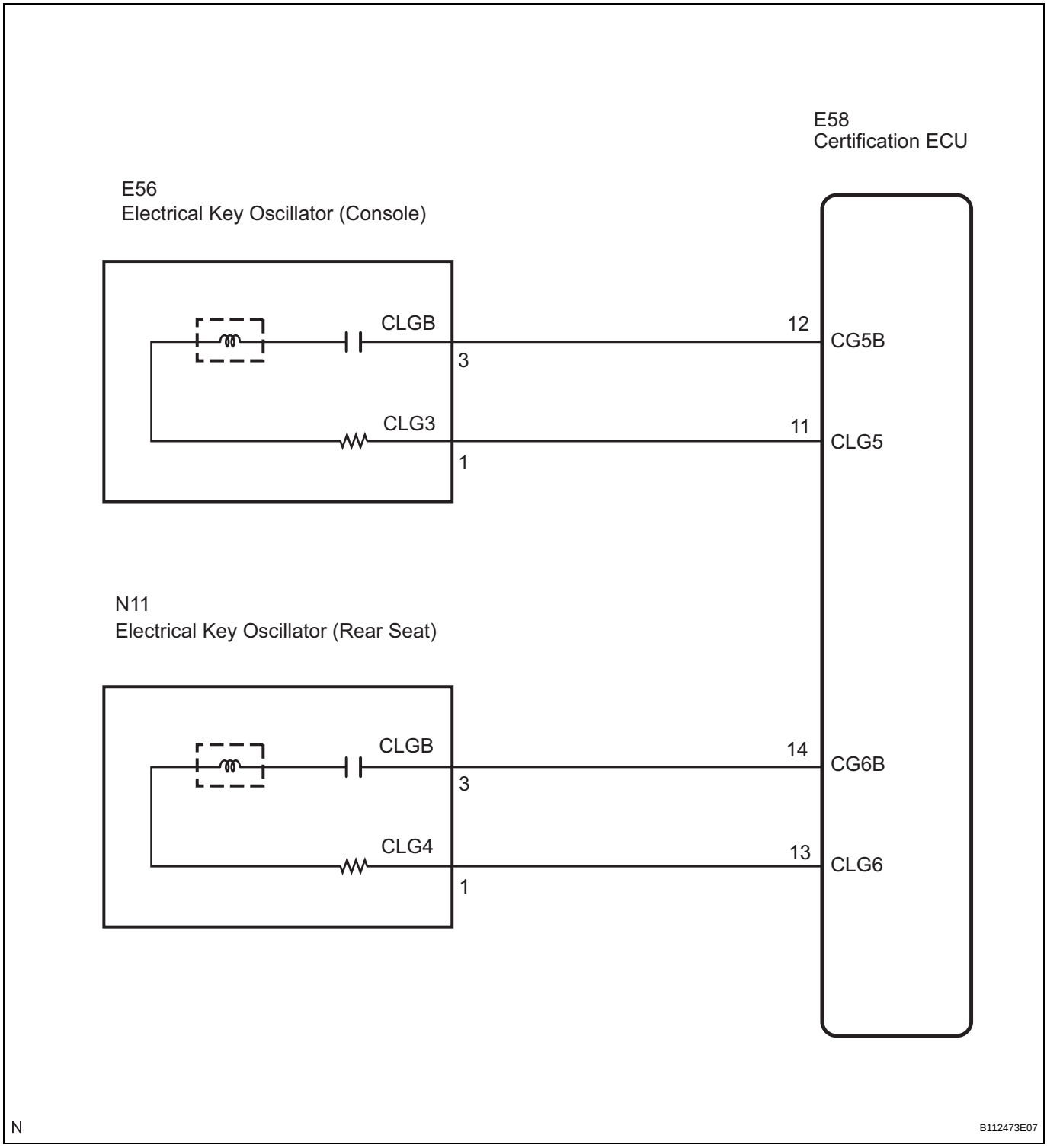

## INSPECTION PROCEDURE

| 1 | CHECK HARNESS AND CONNECTOR (CERTIFICATION ECU - ELECTRICAL KEY OSCILLATOR) |
|---|---|

**Certification ECU:**

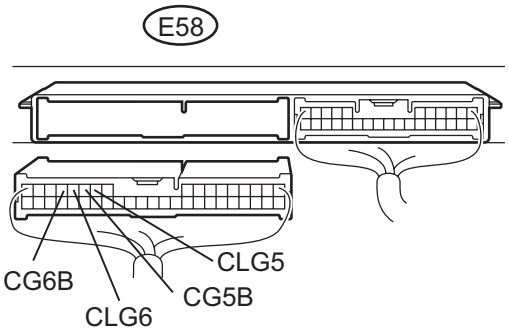


**Electrical Key Oscillator (Console):**

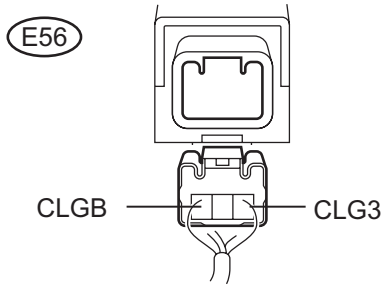


**Electrical Key Oscillator (Rear Seat):**

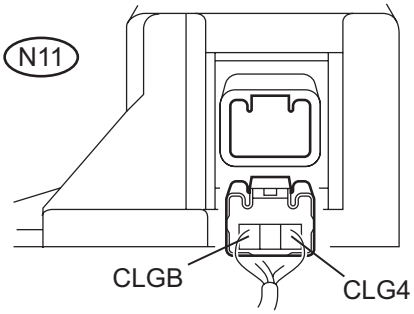


H B137966E01

(a) Disconnect the E58 ECU connector.
(b) Disconnect the oscillator connectors.
(c) Measure the resistance according to the value(s) in the table below.

**Standard resistance**

| Tester Connection (Symbols) | Condition | Specified Condition |
|---|---|---|
| E58-12 (CG5B) - E56-3 (CLGB) | Always | Below 1 Ω |
| E58-11 (CLG5) - E56-1 (CLG3) | Always | Below 1 Ω |
| E58-14 (CG6B) - N11-3 (CLGB) | Always | Below 1 Ω |
| E58-13 (CLG6) - N11-1 (CLG4) | Always | Below 1 Ω |
| E58-12 (CG5B) - Body ground | Always | 10 kΩ or higher |
| E58-11 (CLG5) - Body ground | Always | 10 kΩ or higher |
| E58-14 (CG6B) - Body ground | Always | 10 kΩ or higher |
| E58-13 (CLG6) - Body ground | Always | 10 kΩ or higher |

**NG** → **REPAIR OR REPLACE HARNESS OR CONNECTOR**

**OK**

| 2 | CHECK AND REPLACE ELECTRICAL KEY OSCILLATOR |
|---|---|

(a) Replace the electrical key oscillator.
(b) Check that the entry LOCK/UNLOCK function operates normally.
**OK:**
**Entry LOCK/UNLOCK function operates normally.**

**OK** → **END (ELECTRICAL KEY OSCILLATOR IS DEFECTIVE)**

**NG**

| 3 | PERFORM ACTIVE TEST BY INTELLIGENT TESTER (CERTIFICATION ECU OUTPUT SIGNAL) |
|---|---|

**Certification ECU:**

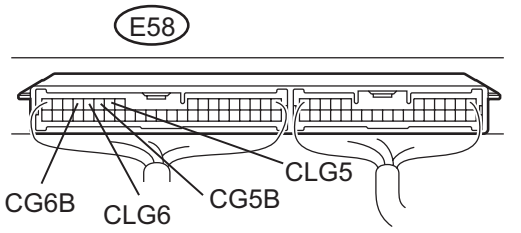


(a) Reconnect the oscillator and the ECU connectors.
(b) Connect the intelligent tester to the DLC3.
(c) Turn the engine switch on (IG).
(d) Following the display on the tester, select the "ACTIVE TEST".
**SMART ACCESS (Certification ECU):**

| Item | Vehicle Condition/Test Details |
|---|---|
| Fr TRANSMITTER | Electrical key oscillator (console) ON/OFF |
| Rr TRANSMITTER | Electrical key oscillator (rear seat) ON/OFF |

(e) Measure the frequency according to the value(s) in the table below.
**Standard**

| Tester Connection (Symbols) | Condition | Specified Condition |
|---|---|---|
| E58-12 (CG5B) - E58-11 (CLG5) | During ACTIVE TEST | Frequency is generated (higher than 0 Hz) |
| E58-14 (CG6B) - E58-13 (CLG6) | During ACTIVE TEST | Frequency is generated (higher than 0 Hz) |

**NG** → **REPLACE CERTIFICATION ECU**

**OK**

DL

**PROCEED TO NEXT CIRCUIT INSPECTION SHOWN IN PROBLEM SYMPTOMS TABLE**

# Luggage Compartment Door Open Switch Circuit

## DESCRIPTION

If the certification ECU detects that the luggage compartment open switch is pressed when the driver is carrying the electrical key or when the electrical key is locked in the luggage compartment door, the certification ECU sends a luggage compartment door open motor drive request signal to the main body ECU.

## WIRING DIAGRAM

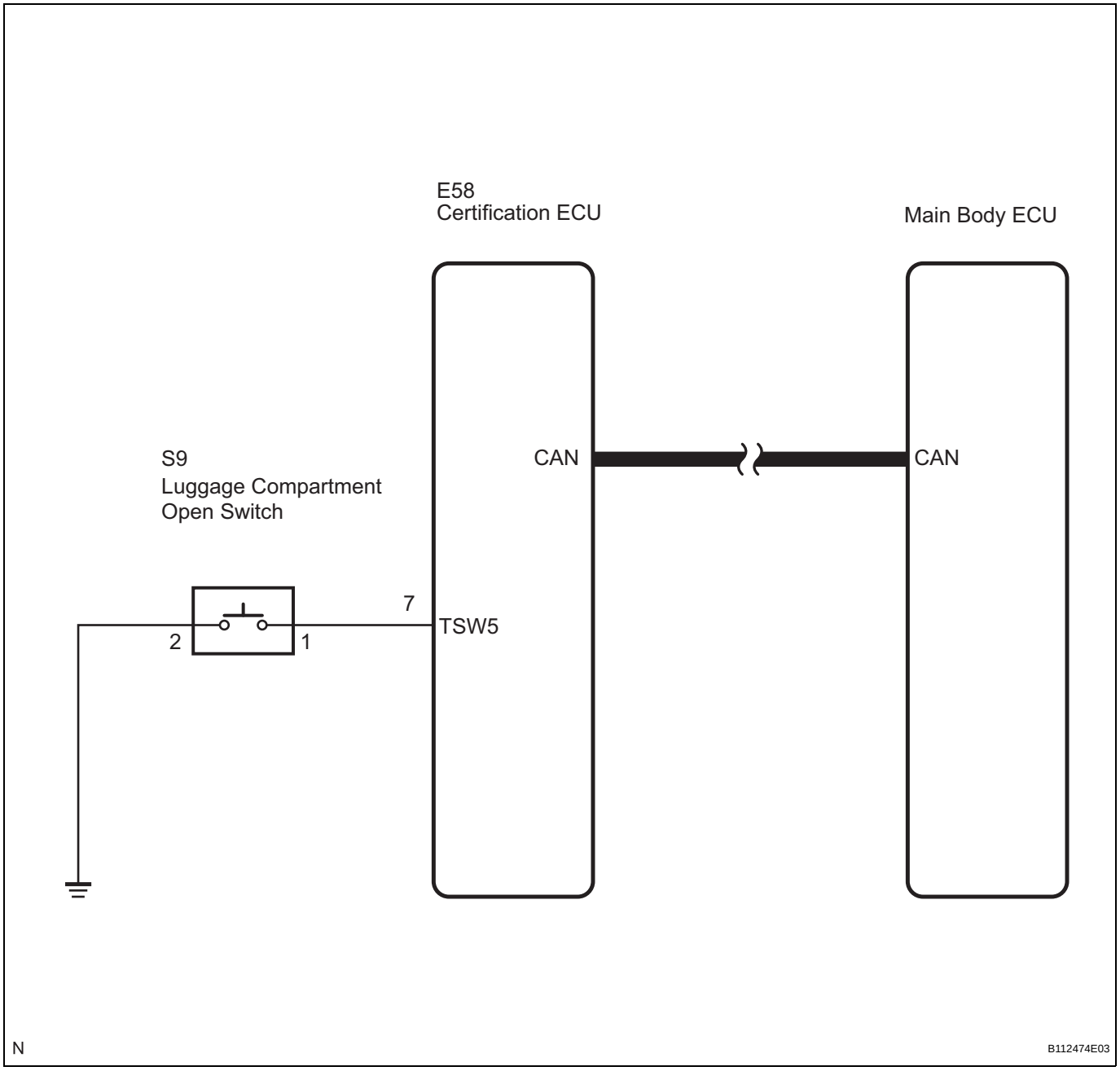

## INSPECTION PROCEDURE

### 1 CHECK HARNESS AND CONNECTOR (CERTIFICATION ECU - LUGGAGE COMPARTMENT OPEN SWITCH)

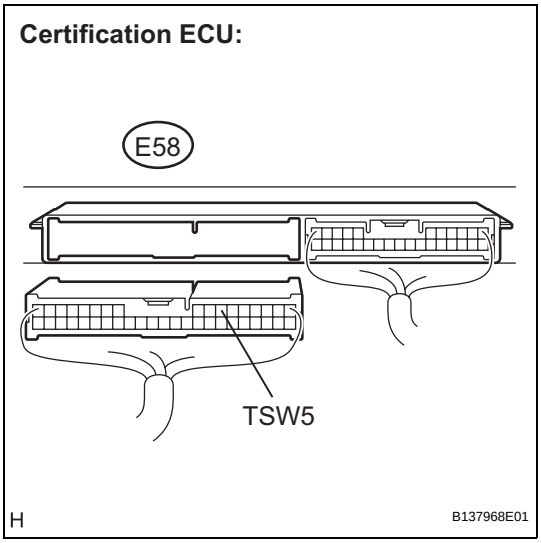


(a) Disconnect the E58 ECU connector.
(b) Measure the resistance according to the value(s) in the table below.

**Standard resistance**

| Tester Connection (Symbols) | Condition | Specified Condition |
|---|---|---|
| E58-7 (TSW5) - Body ground | Luggage compartment open switch not pushed | 10 kΩ or higher |
| | Luggage compartment open switch pushed | Below 1 Ω |

**OK** → **PROCEED TO NEXT CIRCUIT INSPECTION SHOWN IN PROBLEM SYMPTOMS TABLE**

**NG**

### 2 INSPECT LUGGAGE COMPARTMENT OPEN SWITCH

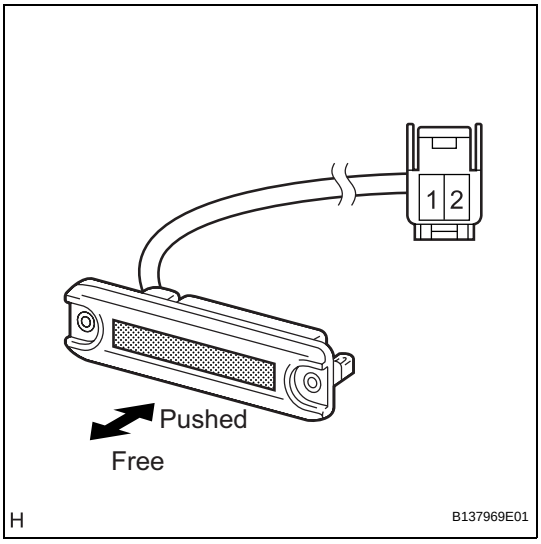


(a) Disconnect the switch connector.
(b) Measure the resistance according to the value(s) in the table below.

**Standard resistance**

| Tester Connection | Condition | Specified Condition |
|---|---|---|
| S9-1 - S9-2 | Luggage compartment open switch not pushed (OFF) | 10 kΩ or higher |
| | Luggage compartment open switch pushed (ON) | Below 1 Ω |

**NG** → **REPLACE LUGGAGE COMPARTMENT OPEN SWITCH**

**OK**

**REPLACE CERTIFICATION ECU**

# Certification ECU Power Source Circuit

## DESCRIPTION

This is the power source circuit of the certification ECU.
The certification ECU controls the following:

- Electrical key verification confirmation
- Cabin and door oscillator control
- Entry door LOCK/UNLOCK request to the main body ECU
- Steering LOCK/UNLOCK request
- Immobilizer SET/UNSET request to the ID code box

## WIRING DIAGRAM

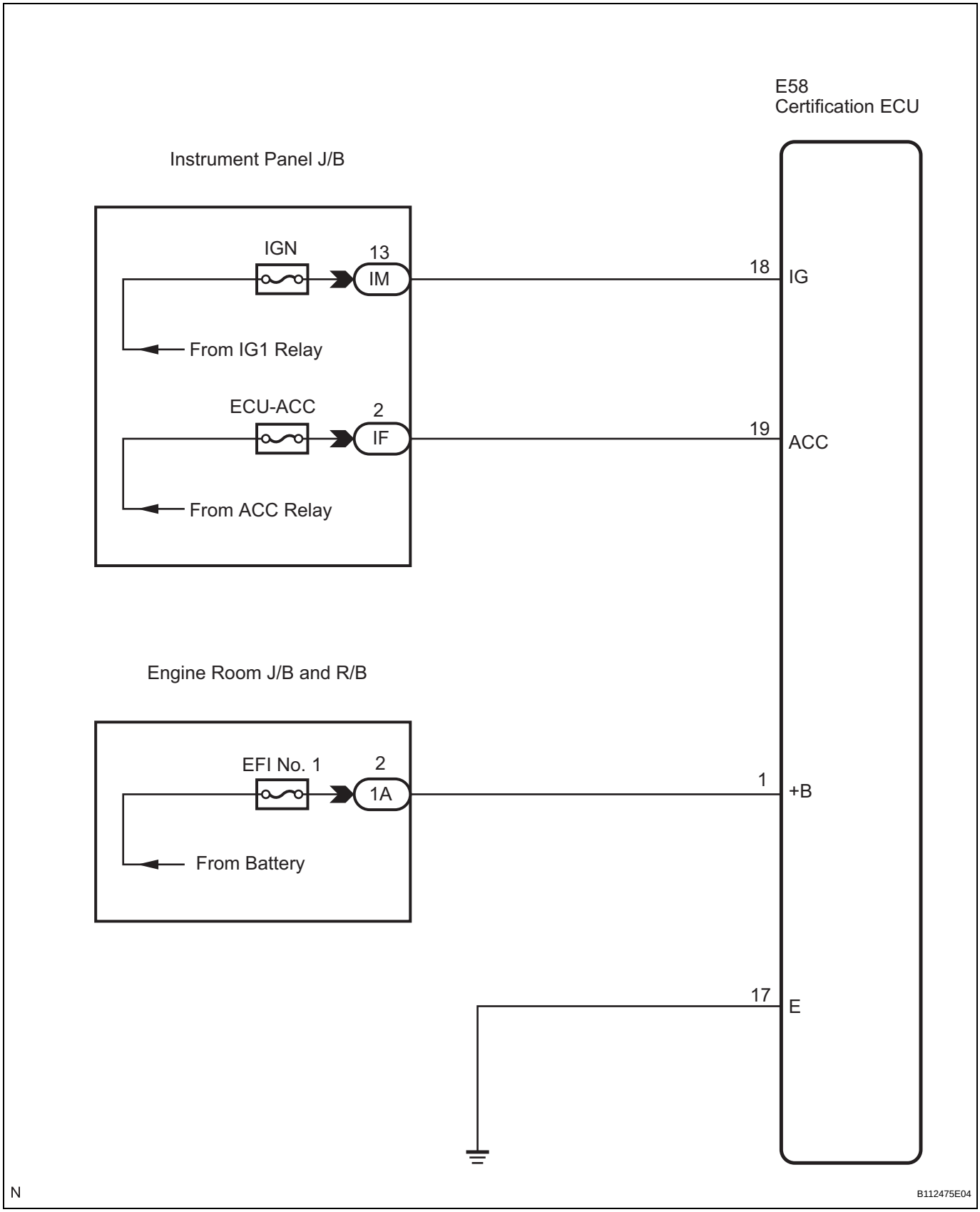

## INSPECTION PROCEDURE

| 1 | CHECK HARNESS AND CONNECTOR (POWER SOURCE CIRCUIT) |
|---|---|

**Certification ECU:**

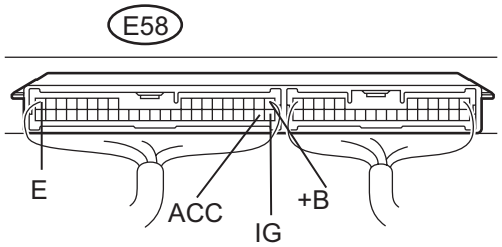


H B137963E07

(a) Disconnect the E58 certification ECU connector.
(b) Measure the voltage according to the value(s) in the table below.

**Standard voltage**

| Tester Connection (Symbols) | Condition | Specified Condition |
|---|---|---|
| E58-1 (+B) - Body ground | Always | 10 to 14 V |
| E58-18 (IG) - Body ground | Engine switch OFF | Below 1 V |
| | Engine switch ON (IG) | 10 to 14 V |
| E58-19 (ACC) - Body ground | Engine switch OFF | Below 1 V |
| | Engine switch ON (ACC) | 10 to 14 V |

(c) Measure the resistance according to the value(s) in the table below.

**Standard resistance**

| Tester Connection (Symbols) | Condition | Specified Condition |
|---|---|---|
| E58-17 (E) - Body ground | Always | Below 1 Ω |

NG → **REPAIR OR REPLACE HARNESS OR CONNECTOR**

OK

**PROCEED TO NEXT CIRCUIT INSPECTION SHOWN IN PROBLEM SYMPTOMS TABLE**

# KEY REMINDER WARNING SYSTEM

## PRECAUTION

**1. PRECAUTION FOR KEY REMINDER WARNING SYSTEM**

(a) For the inspection procedure of the key reminder warning system for models equipped with the entry and start system, refer to SMART KEY SYSTEM (See page DL-142).

# PARTS LOCATION

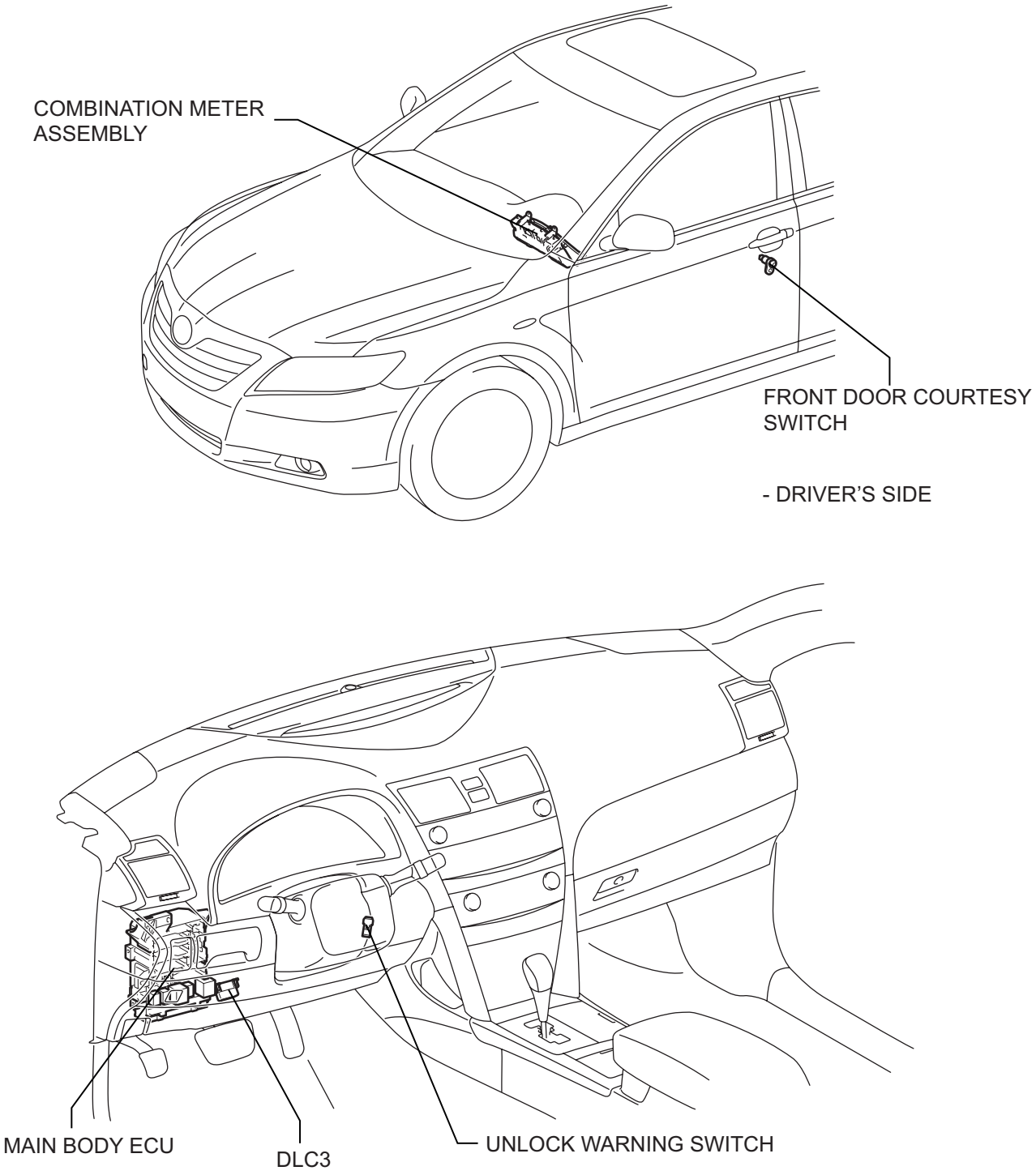


H

B139170E01

# SYSTEM DIAGRAM

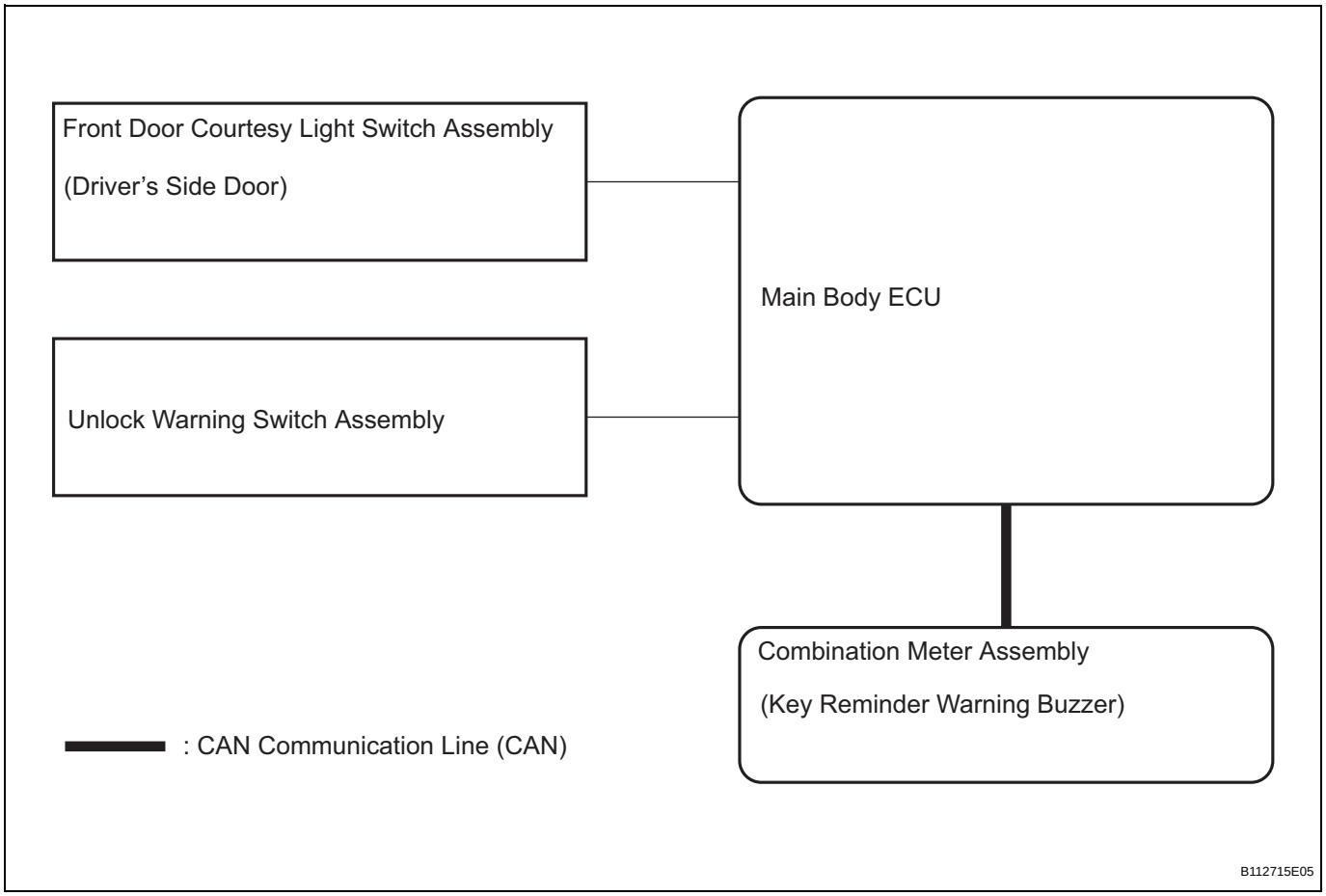


**BODY ECU:**

| Transmitting ECU | Receiving ECU | Signals | Communication method |
|---|---|---|---|
| Main Body ECU | Combination Meter Assembly | Driver's side door courtesy light switch signal | CAN |
| Main Body ECU | Combination Meter Assembly | Unlock warning switch signal | CAN |

# SYSTEM DESCRIPTION

**1. KEY REMINDER WARNING SYSTEM DESCRIPTION**

(a) When the driver's side door is opened with the ignition key in the ACC or LOCK position, this system causes a buzzer to sound in order to warn the driver that the ignition key has not been removed.

# HOW TO PROCEED WITH TROUBLESHOOTING

HINT:
- Use the following procedures to troubleshoot the key reminder warning system.
- The intelligent tester should be used in steps 3 and 5.

| 1 | VEHICLE BROUGHT TO WORKSHOP |
|---|---|

NEXT

| 2 | INSPECT BATTERY VOLTAGE |
|---|---|

(a) Measure the battery voltage.
**Standard voltage:**
**10 to 14 V**
If the voltage is below 10 V, recharge or replace the battery before proceeding to the next step.

NEXT

| 3 | INSPECT COMMUNICATION FUNCTION OF CAN COMMUNICATION SYSTEM (CAN) |
|---|---|

(a) Use the intelligent tester to check if the CAN communication system (CAN) is functioning normally.
(1) (ECU connected, communication line malfunctioning) If no code is output, proceed to A.
(2) (ECU connected, communication line malfunctioning) If any code is output, proceed to B.

B → **GO TO CAN COMMUNICATION SYSTEM**

A

| 4 | PROBLEM SYMPTOMS TABLE |
|---|---|

(a) If the fault is not listed in the problem symptoms table, proceed to A.
(b) If the fault is listed in the problem symptoms table, proceed to B.

B → **Go to step 6**

A

| 5 | OVERALL ANALYSIS AND TROUBLESHOOTING |
|---|---|

(a) Inspection with the intelligent tester (DATA LIST)
(b) TERMINALS OF ECU (See page DL-198)

**NEXT**

| | |
|---|---|
| **6** | **REPAIR OR REPLACE** |

**NEXT**

| | |
|---|---|
| **7** | **CONFIRMATION TEST** |

**NEXT**

**END**

# OPERATION CHECK

**1. CHECK FUNCTION**

(a) Check that the key reminder warning buzzer sounds.

(1) With the driver's side door closed, insert the key into the ignition key cylinder and then turn the key to the LOCK or ACC position.

(2) Check that the buzzer sounds intermittently if the driver's side door is opened.

(b) Check that the key reminder warning buzzer stops.

(1) Check that the buzzer stops sounding if any of the following operations is performed while the buzzer is sounding:

- Close the driver's side door (front door courtesy light switch is off).
- Turn the ignition switch to the ON position.
- Pull out the key from the ignition key cylinder.

# CUSTOMIZE PARAMETERS

**1. PARAMETERS (USING INTELLIGENT TESTER)**

HINT:
The following items can be customized.

**NOTICE:**

- **Be sure to record current values before customizing.**
- **When performing troubleshooting, be aware that the functions may be set to OFF by customizing. (Example: In case of the symptom in which "The wireless operation does not function", check that the wireless operation is not set to OFF by customizing, then perform the troubleshooting.)**

**METER:**

| Display (Item) | Default | Contents | Setting |
|---|---|---|---|
| KEY REMND VOLUM | LARGE | Function to change volume of the key reminder warning buzzer. | LARGE/MEDIUM/SMALL |
| KEY REMND SOUND | NORMAL | Function to change cycle of the key reminder warning buzzer. | FAST/NORMAL/SLOW |

# PROBLEM SYMPTOMS TABLE

## KEY REMINDER WARNING SYSTEM:

| Symptom | Suspected area | See page |
|---|---|---|
| Key reminder buzzer does not sound. | 1. Unlock warning switch circuit | DL-205 |
| | 2. Door courtesy switch circuit | DL-202 |
| | 3. Combination meter assembly (Key reminder buzzer) | ME-15 |
| | 4. Main body ECU (Instrument panel J/B) | - |

# TERMINALS OF ECU

**1. CHECK MAIN BODY ECU (INSTRUMENT PANEL J/B)**

(a) Disconnect the IF and IM, ID*1 or IA*2 junction block connectors.
*1: for TMC Made
*2: for TMMK Made

(b) Disconnect the E7 and E9 main body ECU connectors.

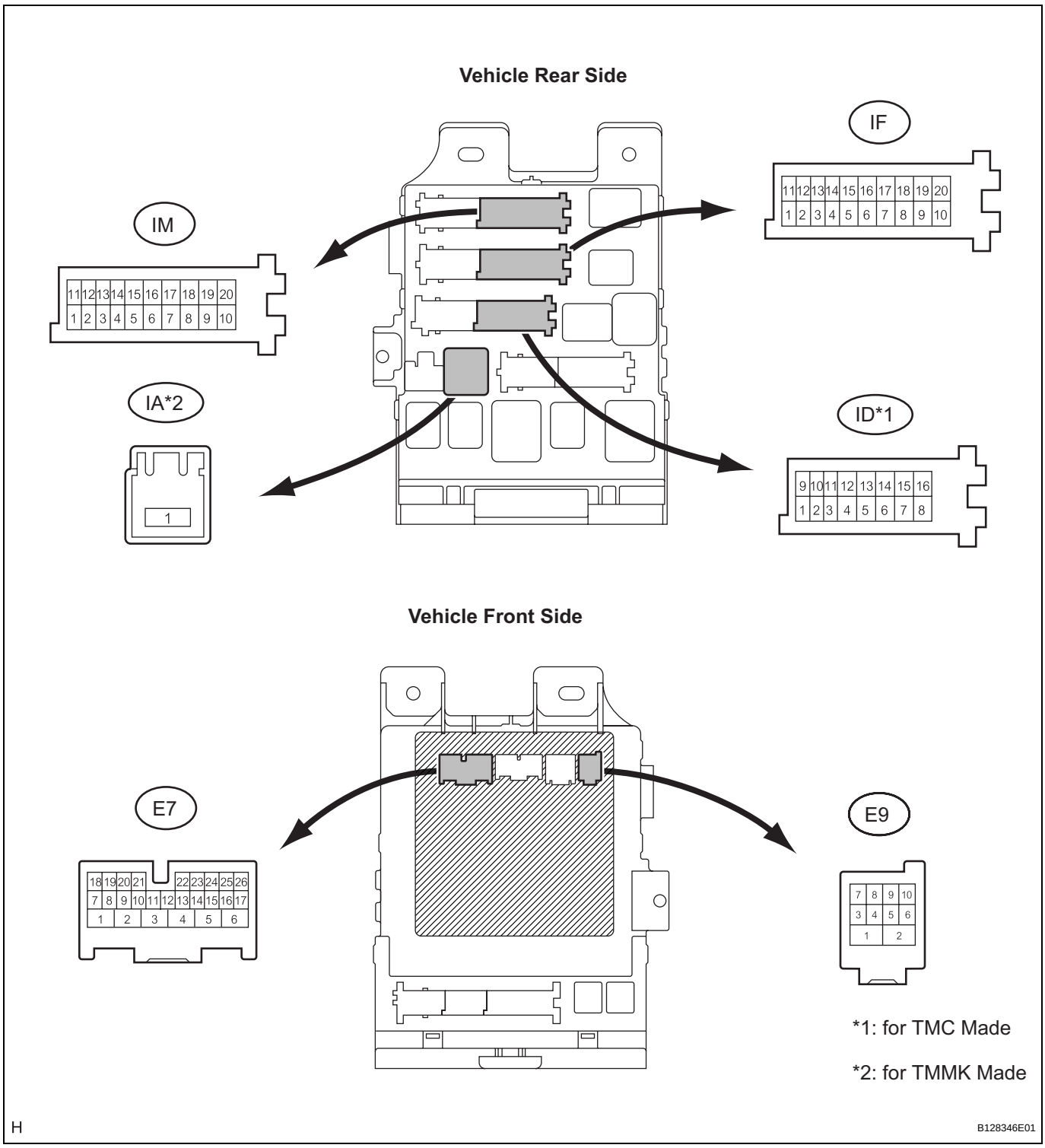


DL

(c) Measure the resistance and voltage according to the value(s) in the table below.

| Symbols (Terminal No.) | Wiring Color | Terminal Description | Condition | Specified Condition |
|---|---|---|---|---|
| GND1 (IF-10) - Body ground | W-B - Body ground | Ground | Always | Below 1 Ω |
| GND2 (IM-9) - Body ground | | | | |
| BECU*1 (ID-10) - Body ground | O*1 - Body ground | Power source | Always | 10 to 14 V |
| BATB*2 (IA-1) - Body ground | B*2 - Body ground | | | |
| DCTY (E7-24) - Body ground | L - Body ground | Driver door courtesy light switch signal | Switch pushed (Door closed) | Below 1 Ω |
| | | | Switch free (Door opened) | 10 kΩ or higher |
| KSW (E9-5) - Body ground | L - Body ground | Key unlock warning switch signal | No key is in ignition key cylinder | 10 kΩ or higher |
| | | | Key is in ignition key cylinder | Below 1 Ω |

*1: for TMC Made
*2: for TMMK Made
HINT:
If the result is not as specified, there may be a malfunction on the wire harness side.

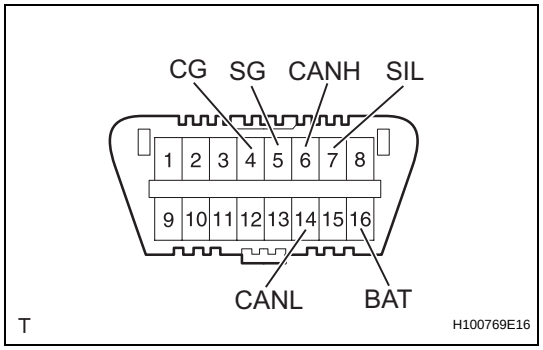


# DIAGNOSIS SYSTEM

**1. CHECK DLC3**

(a) The vehicle's ECU uses ISO 15765-4 for communication protocol. The terminal arrangement of the DLC3 complies with SAE J1962 and matches the ISO 15765-4 format.

| Symbols (Terminal No.) | Terminal Description | Condition | Specified Condition |
|---|---|---|---|
| SIL (7) - SG (5) | Bus "+" line | During transmission | Pulse generation |
| CG (4) - Body ground | Chassis ground | Always | Below 1 Ω |
| SG (5) - Body ground | Signal ground | Always | Below 1 Ω |
| BAT (16) - Body ground | Battery positive | Always | 10 to 14 V |
| CANH (6) - CANL (14) | CAN bus line | Ignition switch OFF* | 54 to 69 Ω |
| CANH (6) - CG (4) | HIGH-level CAN bus line | Ignition switch OFF* | 200 Ω or higher |
| CANL (14) - CG (4) | LOW-level CAN bus line | Ignition switch OFF* | 200 Ω or higher |
| CANH (6) - BAT (16) | HIGH-level CAN bus line | Ignition switch OFF* | 6 kΩ or higher |
| CANL (14) - BAT (16) | LOW-level CAN bus line | Ignition switch OFF* | 6 kΩ or higher |

**NOTICE:**
***: Before measuring the resistance, leave the vehicle as is for at least 1 minute and do not operate the ignition switch, any other switches or the doors.**
If the result is not as specified, the DLC3 may have a malfunction. Repair or replace the harness and connector.

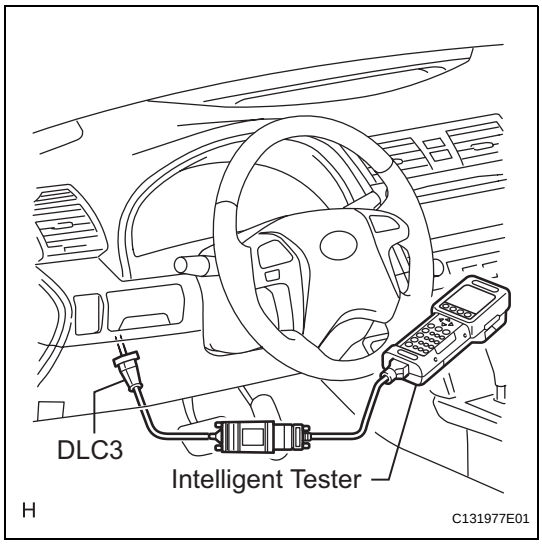


(b) Connect the cable of the intelligent tester (with CAN VIM) to the DLC3, turn the ignition switch to the ON position and attempt to use the intelligent tester. If the screen displays a communication error message, a problem exists in the vehicle side or tester side.
HINT:
- If communication is normal when the tool is connected to another vehicle, inspect the DLC3 on the original vehicle.
- If communication is still impossible when the tool is connected to another vehicle, the problem is probably in the tool itself. Consult the Service Department listed in the tool's instruction manual.

# DATA LIST / ACTIVE TEST

**1. READ DATA LIST**

HINT:
Using the intelligent tester to read the DATA LIST allows the values or states of switches, sensors, actuators and other items to be read without removing any parts. This non intrusive inspection can be very useful as intermittent conditions or signals may be discovered before parts or wiring is disturbed. Reading the DATA LIST information early in troubleshooting is one way to save diagnostic time.

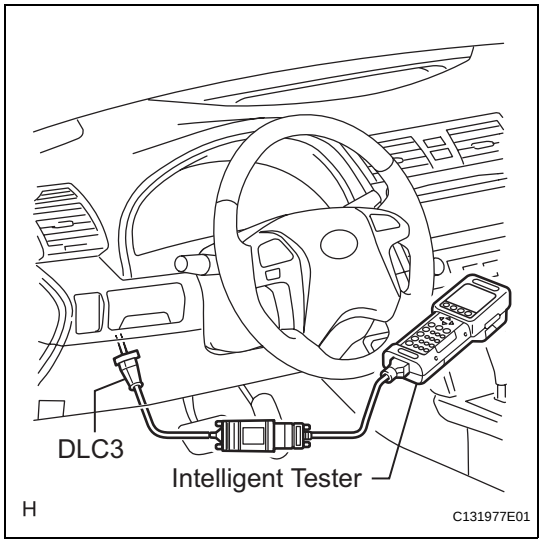


(a) Connect the intelligent tester to the Controller Area Network Vehicle Interface Module (CAN VIM). Then connect the CAN VIM to the DLC3.
(b) Turn the ignition switch to the ON position.
(c) Read the DATA LIST.

**MAIN BODY:**

| Item | Measurement Item / Display (Range) | Normal Condition | Diagnostic Note |
|---|---|---|---|
| KEY UNLK WRN SW | Unlock warning switch signal /ON or OFF | ON: Key is in ignition key cylinder<br>OFF: No key is in ignition key cylinder | - |
| D DOR CTY SW | Driver's side door courtesy switch signal /ON or OFF | ON: Driver's side door is open<br>OFF: Driver's side door is closed | - |

# Door Courtesy Switch Circuit

## DESCRIPTION

The main body ECU detects the condition of the front door courtesy light switch assembly (driver's side).

## WIRING DIAGRAM

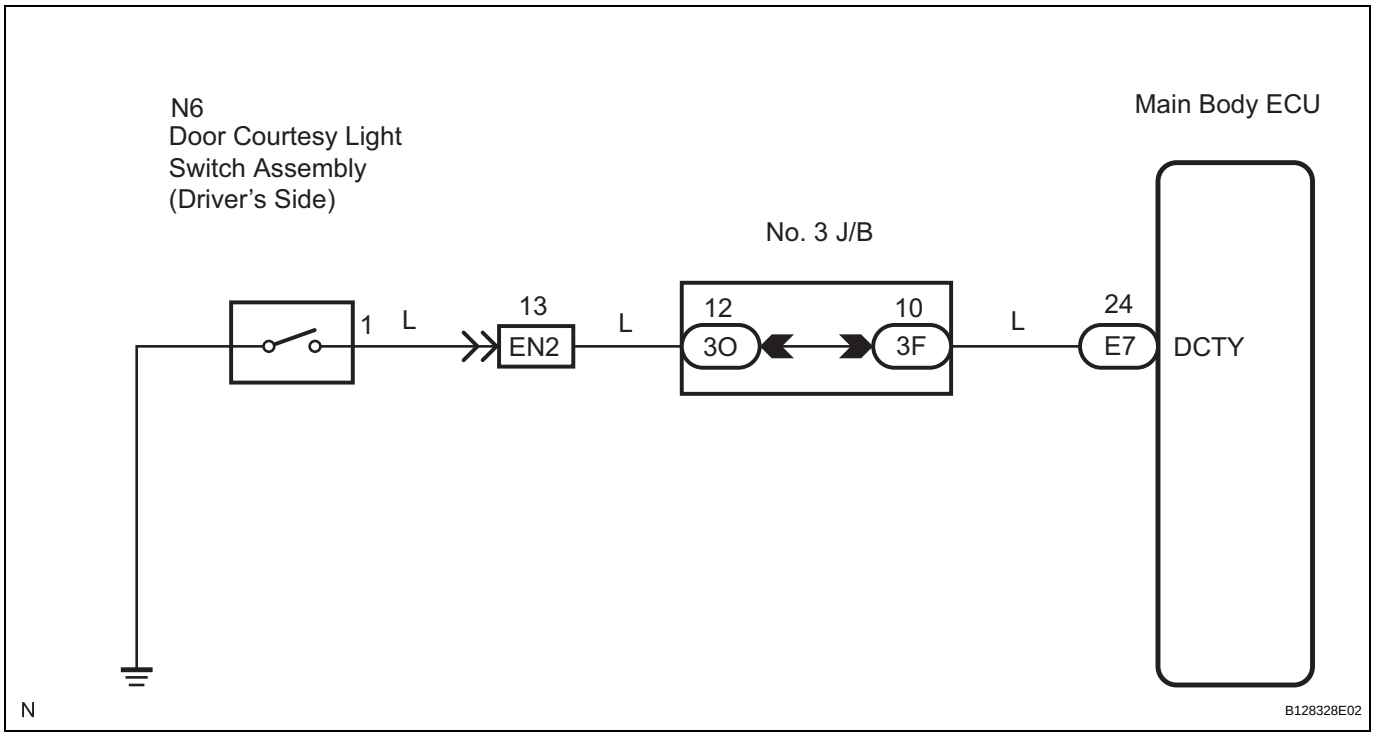


## INSPECTION PROCEDURE

| 1 | READ VALUE OF INTELLIGENT TESTER |
|---|---|

(a) Connect the intelligent tester (with CAN VIM) to the DLC3.
(b) Turn the ignition switch to the ON position and turn the intelligent tester main switch on.
(c) Select D DOR CTY SW in the DATA LIST and read the value displayed on the tester.

DL

**BODY:**

| Item | Measurement Item/Display (Range) | Normal Condition | Diagnostic Note |
|---|---|---|---|
| D DOR CTY SW | Driver's side door courtesy switch signal/ON or OFF | ON: Driver's side door is open<br>OFF: Driver's side door is closed | - |

**OK:**
**ON (Driver's door is open) appears on the screen.**

**OK** → **PROCEED TO NEXT CIRCUIT INSPECTION SHOWN IN PROBLEM SYMPTOMS TABLE**

**NG**

## 2 INSPECT FRONT DOOR COURTESY LIGHT SWITCH ASSEMBLY

**Front Door Courtesy Light Switch Side Connector Front View:**

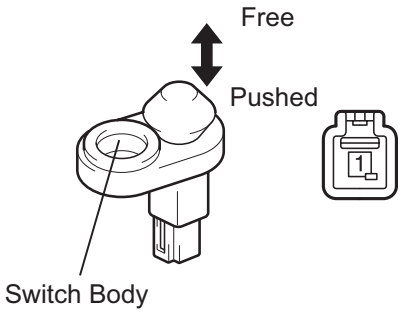


P B111600E02

(a) Remove the driver's side front door courtesy light switch (See page LI-128).

(b) Measure the resistance according to the value(s) in the table below.

**Standard resistance**

| Tester Connection | Condition | Specified Condition |
|---|---|---|
| 1 - Switch body | Courtesy switch pushed (Door closed) | 10 kΩ or higher |
| | Courtesy switch free (Door open) | Below 1 Ω |

NG → **REPLACE FRONT DOOR COURTESY LIGHT SWITCH ASSEMBLY**

OK

## 3 CHECK HARNESS AND CONNECTOR (FRONT DOOR COURTESY LIGHT SWITCH - MAIN BODY ECU)

**Wire Harness Side Connector Front View:**

N6
Front Door Courtesy Light Switch Assembly

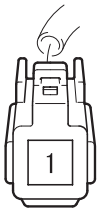


E7
Main Body ECU

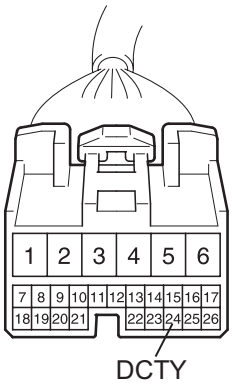


P B139169E03

(a) Disconnect the E7 ECU connector.

(b) Measure the resistance according to the value(s) in the table below.

**Standard resistance**

| Tester Connection | Condition | Specified Condition |
|---|---|---|
| N6-1 - E7-24 (DCTY) | Always | Below 1 Ω |
| N6-1 - Body ground | | 10 kΩ or higher |

NG → **REPAIR OR REPLACE HARNESS OR CONNECTOR**

**OK**

**PROCEED TO NEXT CIRCUIT INSPECTION SHOWN IN PROBLEM SYMPTOMS TABLE**

# Unlock Warning Switch Circuit

## DESCRIPTION

The unlock warning switch detects if the key is in the ignition key cylinder.
The unlock warning switch turns on when the key is inserted into the ignition key cylinder and turns off when the key is removed from the cylinder.
The main body ECU is connected to the unlock warning switch via terminal KSW and key detection status signals are input to the main body ECU.
The main body ECU applies voltage to the unlock warning switch via terminal KSW. When the unlock warning switch is on (there is continuity between the switch terminals), a signal indicating that the key is in the ignition key cylinder is input to the main body ECU. When the switch is off (there is no continuity between the switch terminals), a signal indicating that the key is not in the cylinder is input.

## WIRING DIAGRAM

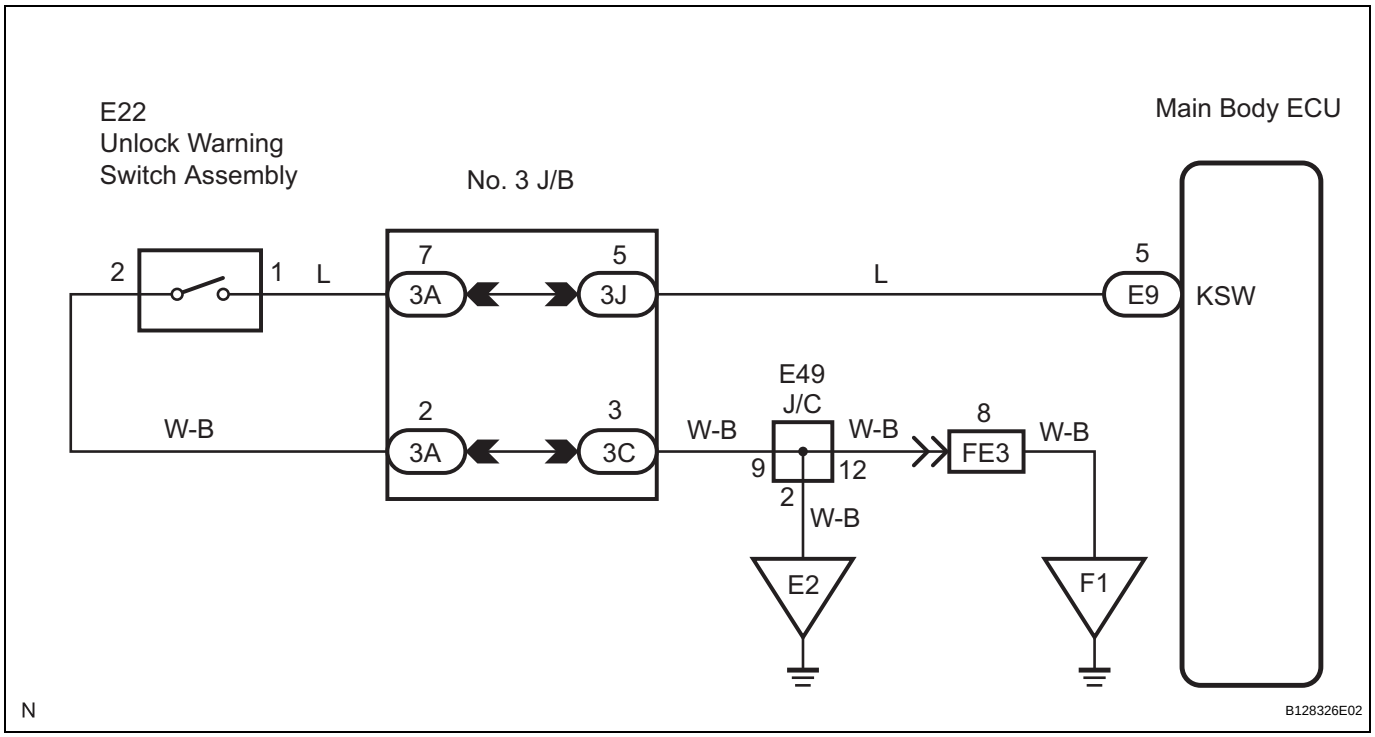


## INSPECTION PROCEDURE

| 1 | READ VALUE OF INTELLIGENT TESTER |
|---|---|

(a) Connect the intelligent tester (with CAN VIM) to the DLC3.
(b) Turn the ignition switch to the ON position and turn the intelligent tester main switch on.
(c) Select KEY UNLK WRN SW in the DATA LIST and read the value displayed on the tester.

**BODY:**

| Item | Measurement Item / Display (Range) | Normal Condition | Diagnostic Note |
|---|---|---|---|
| KEY UNLK WRN SW | Unlock warning switch signal /ON or OFF | ON: Key is in ignition key cylinder<br>OFF: No key is in ignition key cylinder | - |

DL

**OK:**
**ON (Key is in ignition key cylinder) appears on the screen.**

**OK** → **PROCEED TO NEXT CIRCUIT INSPECTION SHOWN IN PROBLEM SYMPTOMS TABLE**

**NG**

## 2 INSPECT UNLOCK WARNING SWITCH ASSEMBLY

**Unlock Warning Switch Assembly:**

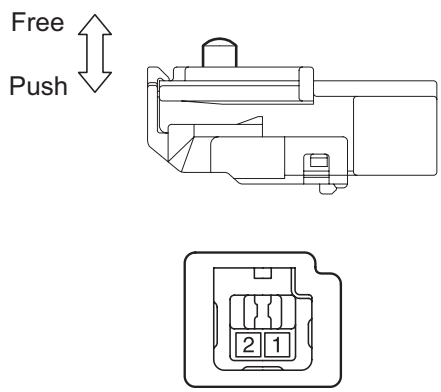


(a) Remove the unlock warning switch assembly (See page DL-225).

(b) Measure the resistance according to the value(s) in the table below.

**Standard resistance**

| Tester Connection | Condition | Specified Condition |
|---|---|---|
| 1 - 2 | Switch free (Key removed) | 10 kΩ or higher |
| 1 - 2 | Switch pushed (Key set) | Below 1 Ω |

**NG** → **REPLACE UNLOCK WARNING SWITCH ASSEMBLY**

**OK**

## 3 CHECK HARNESS AND CONNECTOR (UNLOCK WARNING SWITCH - MAIN BODY ECU)

**Wire Harness Side Connector Front View:**

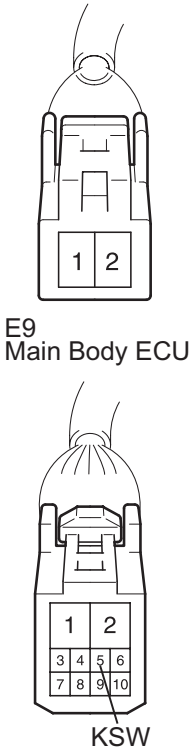


(a) Disconnect the E22 switch and E9 ECU connectors.
(b) Measure the resistance according to the value(s) in the table below.
**Standard resistance**

| Tester Connection | Condition | Specified Condition |
|---|---|---|
| E22-1 - E9-5 (KSW) | Always | Below 1 Ω |
| E22-1 - Body ground | | 10 kΩ or higher |

**NG** → **REPAIR OR REPLACE HARNESS OR CONNECTOR**

**OK**

## 4 CHECK HARNESS AND CONNECTOR (UNLOCK WARNING SWITCH - BODY GROUND)

**Wire Harness Side Connector Front View:**

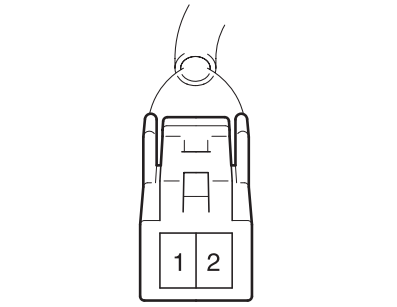


(a) Measure the resistance according to the value(s) in the table below.
**Standard resistance**

| Tester Connection | Condition | Specified Condition |
|---|---|---|
| E22-2 - Body ground | Always | Below 1 Ω |

**NG** → **REPAIR OR REPLACE HARNESS OR CONNECTOR**

**OK**

**PROCEED TO NEXT CIRCUIT INSPECTION SHOWN IN PROBLEM SYMPTOMS TABLE**

# DOOR CONTROL TRANSMITTER (w/ Smart Key System)

## COMPONENTS

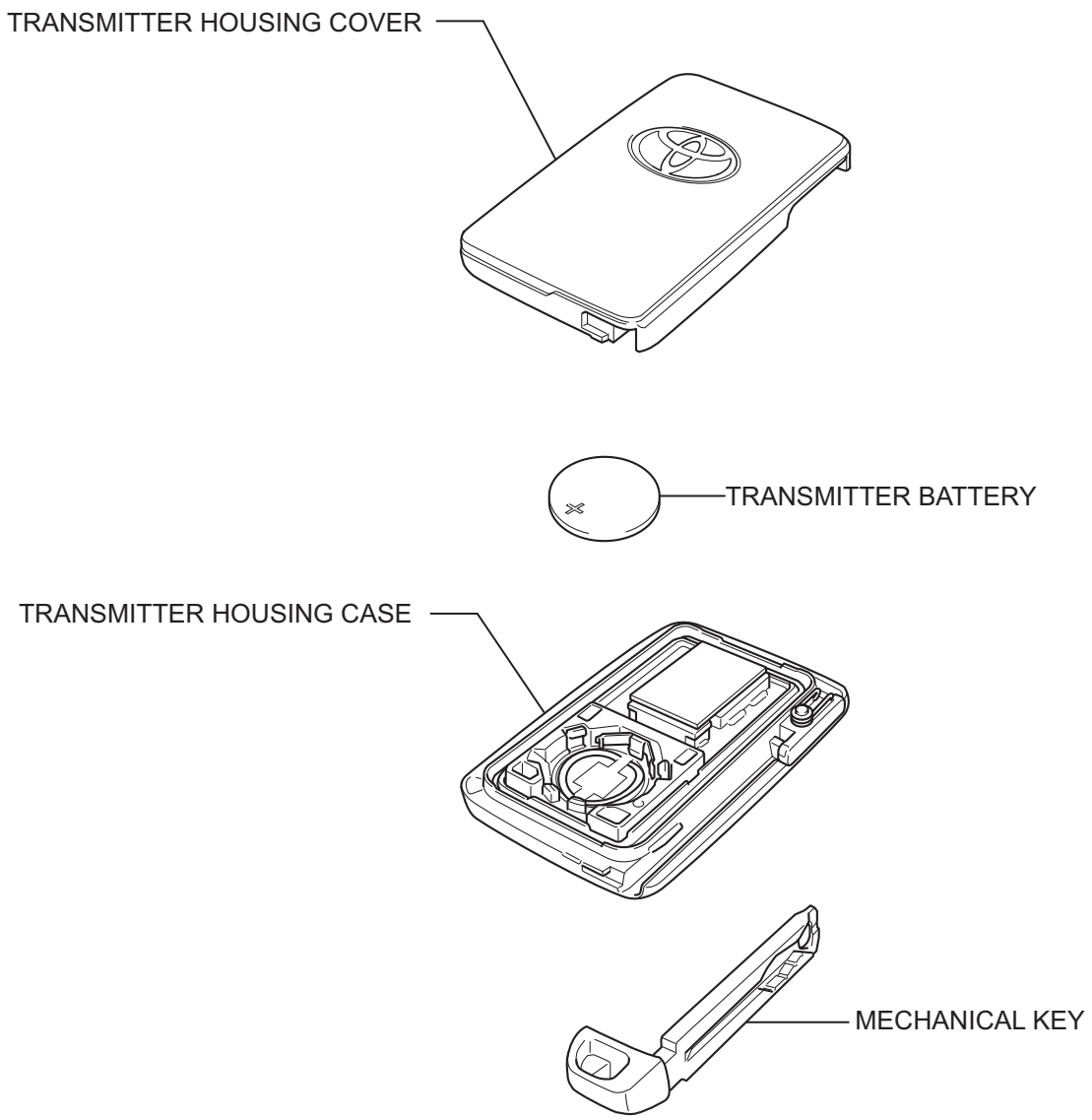


Y

B107890E03

# REMOVAL

**1. REMOVE TRANSMITTER BATTERY**

(a) Remove the mechanical key.

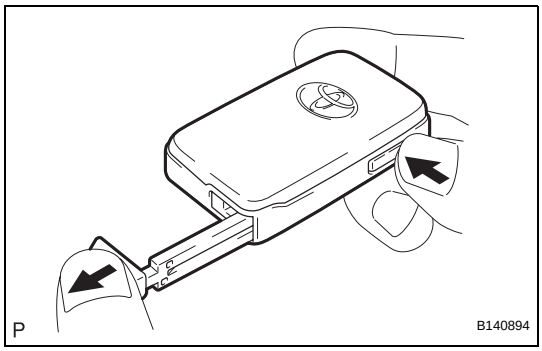


(b) Insert a screwdriver into the gap, and turn the screwdriver to detach the cover.
HINT:
Tape the screwdriver tip before use.

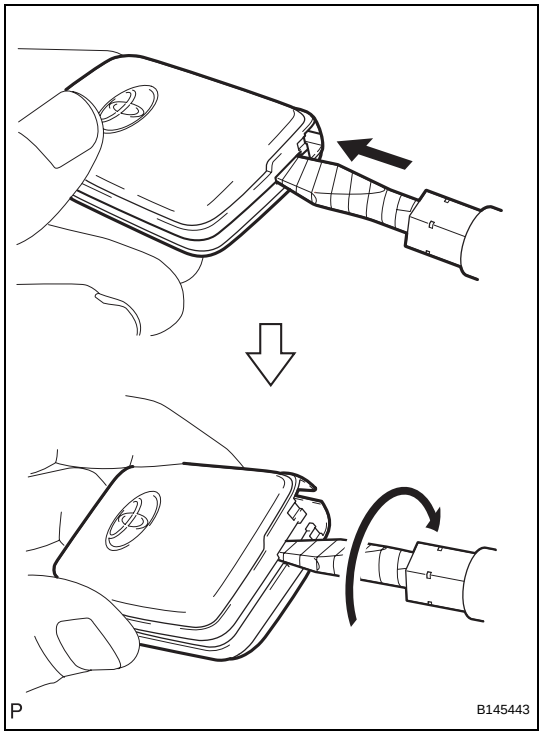


(c) Insert a screwdriver into the gap and gently remove the battery (lithium battery).
**NOTICE:**
- **Do not push the terminals with your finger.**
- **Do not forcibly pry up the battery (lithium battery) because doing so will deform the terminals.**
- **Do not touch the battery with wet hands. Water may result in corrosion.**
- **Do not touch or move any components inside the transmitter because handling the components may interfere with proper operation of the transmitter.**

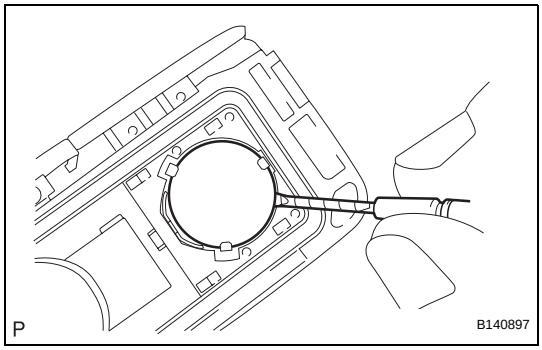

# INSPECTION

**1. INSPECT DOOR CONTROL TRANSMITTER**

(a) Inspect operation of the transmitter.

(1) Remove the battery (lithium battery) from the transmitter (See page DL-210).

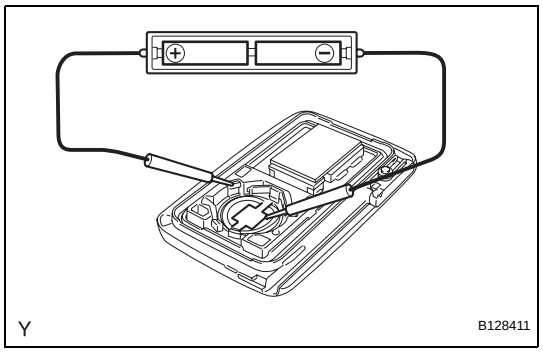


(2) Install a new or normal battery (lithium battery).
HINT:
If a new or normal battery is not available, first connect 2 new 1.5 V batteries in series. Then connect leads to the batteries and apply 3 V to the transmitter, as shown in the illustration.

(3) From outside the vehicle, approximately 1 m (3.28 ft.) away from the driver side outside door handle, test the transmitter by pointing its key plate at the vehicle and pressing a transmitter switch.
**OK:**
**The door lock can be operated via the transmitter.**
**The LED comes on more than once.**
- The operational area differs depending on the user, the way the transmitter is held, and the location.
- The transmitter's faint electric waves may be affected if the area has strong electric waves or noise. The transmitter's operation area may be shortened or the transmitter may not function.

(b) Inspect the battery capacity.
HINT:
- When checking the amount of energy left in the battery (lithium battery), the battery must be checked while it is installed in the transmitter (a resistance of 1.2 kΩ is applied to the battery). When the battery energy is checked by itself (removed from the vehicle), the voltage reading will be more than 2.5 V until the energy is depleted.
- If the transmitter is malfunctioning, the voltage reading of the energy left in the battery will be inaccurate.

(1) Remove the battery (lithium battery) from the transmitter (See page DL-210).

(2) Connect a wire to the negative (-) terminal of the transmitter and install the battery.

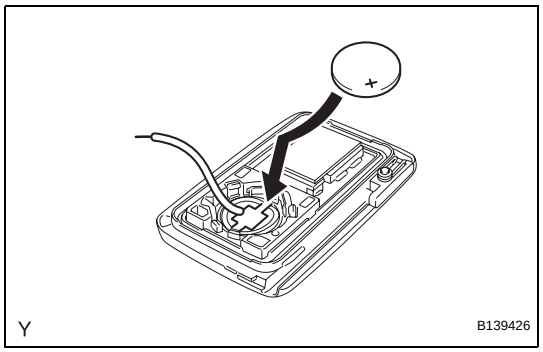


DL

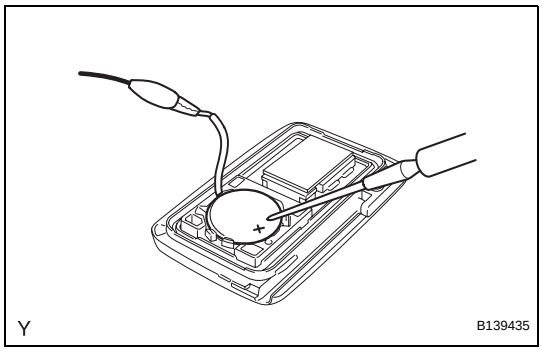


(3) Connect the tester positive (+) lead to the positive (+) battery (lithium battery), and the tester negative (-) lead to the wire connected in the previous step.

(4) Press one of the transmitter switches on the transmitter for approximately 1 second.

(5) Press the transmitter switch on the transmitter again to check the voltage.

**Voltage:**

**2.2 V or higher**

HINT:

- If the temperature of the battery is low, the inspection cannot be performed correctly. If the result of the test is less than 2.2 V, perform the test again after leaving the battery in a place at a temperature of 18°C (64°F) for 30 minutes or more.
- Read the voltage immediately after the switch is pressed. When 0.8 seconds have passed after the switch is pressed, the automatic power-off function starts and the resistance applied to the battery will cease. The voltage of the battery will be 2.5 V or more.
- Press the switch at least 3 times before reading the voltage. If the battery has just been returned to 18°C (64°F), the voltage may be unusually high for the first or second voltage reading.

# INSTALLATION

**1. INSTALL TRANSMITTER BATTERY**

(a) Install a new battery (lithium battery) with the positive (+) side up as shown in the illustration.

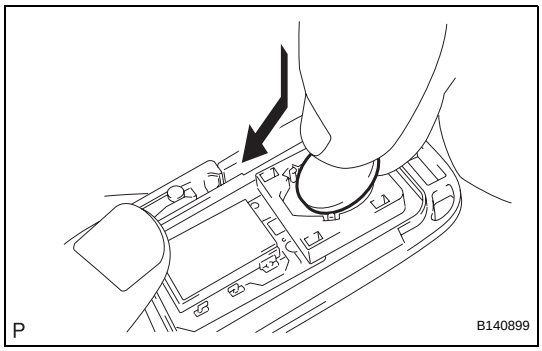


(b) Press down gently on the battery to set it in place.

**NOTICE:**

- **Be sure that the positive and negative sides of the transmitter battery are positioned correctly.**
- **Be careful not to bend the terminals of the transmitter battery during installation.**
- **Keep the interior of the transmitter case free of dust, water, and oil.**

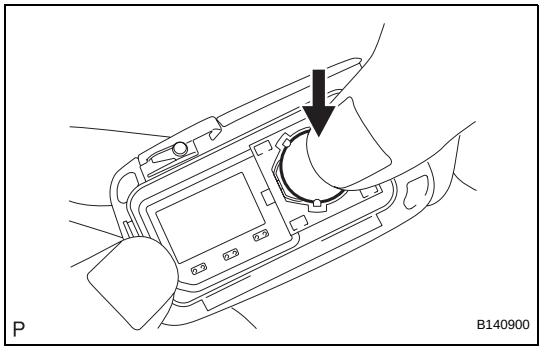

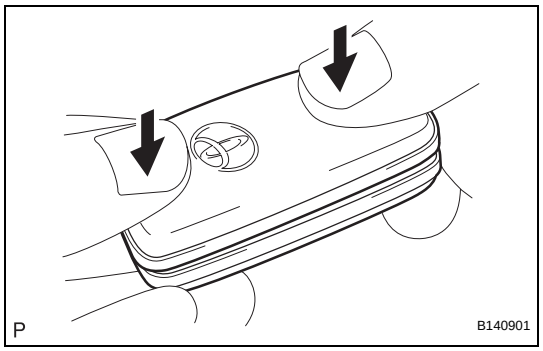


(c) Install the cover by pressing down on it as shown in the illustration.

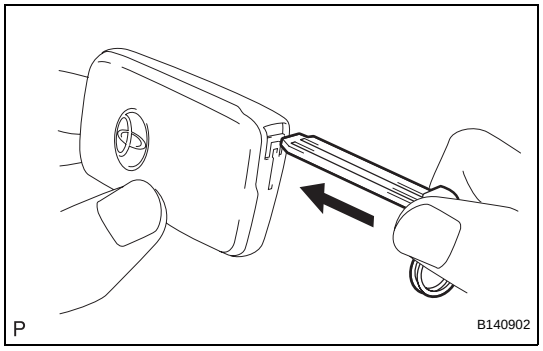


(d) Install the mechanical key.
HINT:
After the installation, press one of the transmitter switches and check that the LED illuminates.

# DOOR CONTROL TRANSMITTER (w/o Smart Key System)

## COMPONENTS

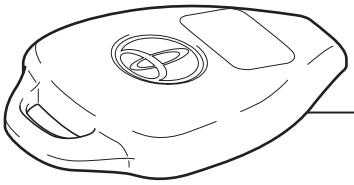

TRANSMITTER HOUSING COVER

DOOR CONTROL TRANSMITTER MODULE

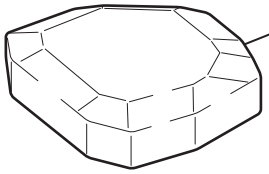

TRANSMITTER BATTERY COVER

TRANSMITTER BATTERY (LITHIUM BATTERY: CR2016)

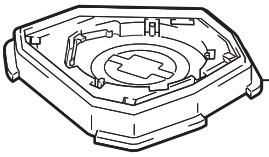

TRANSMITTER BATTERY CASE

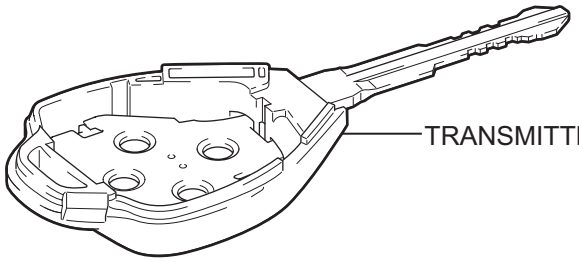

TRANSMITTER HOUSING CASE

P

B140903E01

DL

# REMOVAL

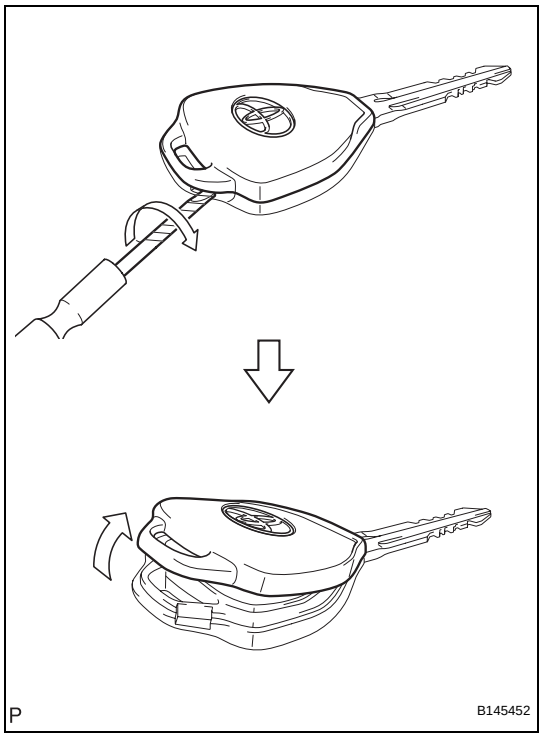


**1. REMOVE TRANSMITTER BATTERY**

(a) Remove the transmitter battery.

(1) Using a screwdriver with its tip wrapped in protective tape, pry open the transmitter housing cover.

**NOTICE:**

**Do not use excessive force when prying open the housing cover.**

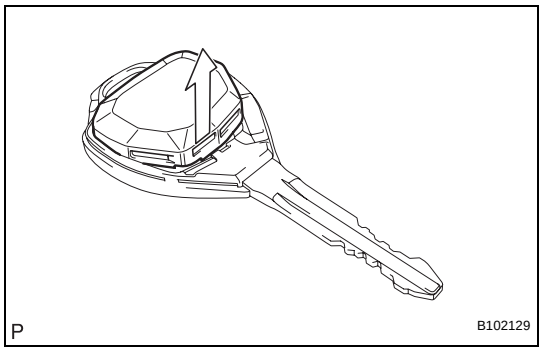


(b) Remove the door control transmitter module from the transmitter housing case.

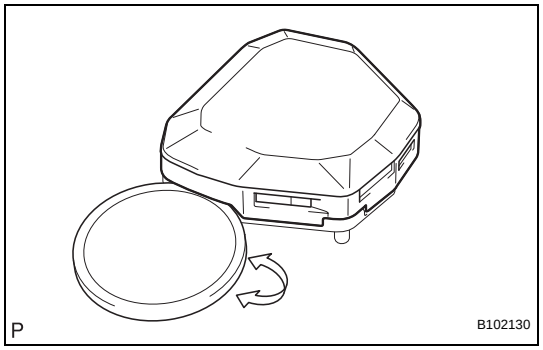


(c) Using a coin, or other flat object, pry open the transmitter cover.

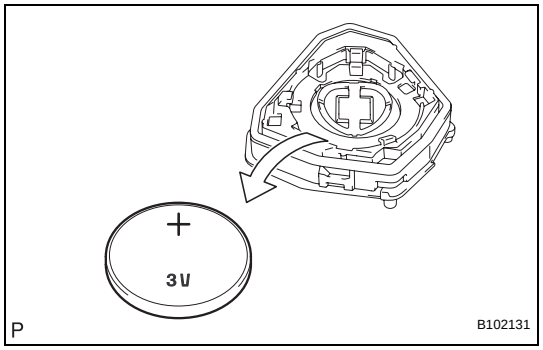


(d) Remove the transmitter battery (lithium battery).

**NOTICE:**

- **Do not push the terminals with your finger.**
- **Do not forcibly pry up the battery (lithium battery) because doing so will deform the terminals.**
- **Do not touch the battery with wet hands. Water may result in corrosion.**

- **Do not touch or move any components inside the transmitter because handling the components may interfere with proper operation of the transmitter.**

# INSPECTION

**1. INSPECT DOOR CONTROL TRANSMITTER**

(a) Inspect operation of the transmitter.

(1) Remove the battery (lithium battery) from the transmitter (See page DL-215).

(2) Install a new or normal battery (lithium battery).

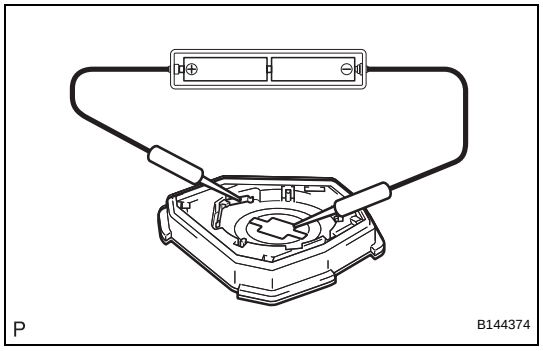


(3) If a new or normal battery is not available, connect 2 new 1.5 V batteries in a series. Connect the positive (+) battery electrode to the battery receptacle side terminal, and the negative (-) battery electrode to the bottom terminal, and apply a voltage of 3 V to the transmitter.

(4) In a location that is approximately 1 m (3.28 ft) away from the driver side outside door handle, point the key plate of the transmitter at the vehicle and check operation of the transmitter by pressing the transmission switches on the transmitter body.

**Standard:**

**The door lock/unlock can be operated via remote control.**

**The LED lights up when each switch is pressed.**

HINT:

- The minimum operational distance differs depending on the way the transmitter is held and the location.
- Since the transmitter uses faint electric waves, the operational distance might be shortened if noise or a strong electric wave occurs in the area where the frequency is used.

(5) Install the battery (lithium battery).

(b) Inspect the battery capacity.

HINT:

- The capacity of the battery can be determined only when the battery is installed in the transmitter. For a lithium battery used in the transmitter, a voltage of more than 2.5 V is shown on the tester until the energy is completely consumed without the battery installed in the transmitter. Therefore, it is necessary to measure the voltage with the battery installed in the transmitter (a resistance of 1.2 kΩ is applied to the battery) to check the amount of energy left in the battery.
- If the transmitter is faulty, the amount of energy left in the battery might not be checked correctly.

(1) Remove the battery (lithium battery) from the transmitter (See page DL-215).

(2) Connect the lead to the negative (-) terminal of the transmitter and install the battery.

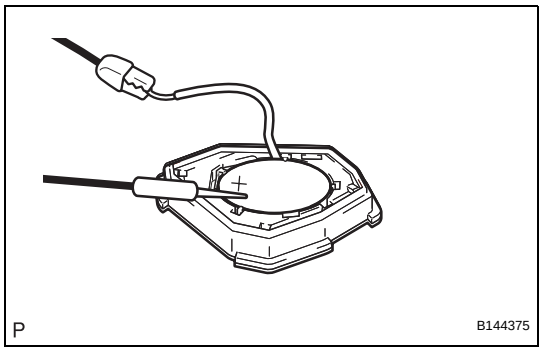


(3) Connect the positive (+) tester probe to the positive (+) side of the battery (lithium battery), and the negative (-) tester probe to the lead respectively.

(4) Press one of the transmission switches on the transmitter for approximately 1 second.

(5) Press the same or another transmission switch again and check the voltage.

**Voltage:**

**2.2 V or higher**

HINT:

- If the temperature of the battery is low, the inspection cannot be done correctly.
  If the outcome of the test is less than 2.2 V, conduct the test again after leaving the battery in a place with a temperature of 18°C (64°F) for more than 30 minutes.
- The automatic power-off function causes the battery voltage to be 2.5 V or more (with no resistance applied to the battery) when 0.8 seconds have passed after the switch is pressed. Therefore, make sure to read the voltage immediately after the switch is pressed.

(6) Remove the lead.

(7) Set the battery (lithium battery) in the transmitter.

# INSTALLATION

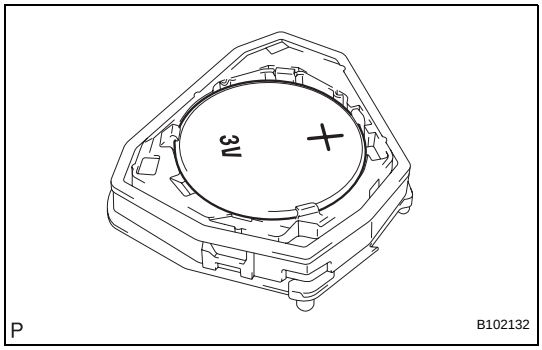


**1. INSTALL TRANSMITTER BATTERY**

(a) Install the transmitter battery.

(1) Install a battery (lithium battery: CR2016) with the positive (+) side up, as shown in the illustration.

**NOTICE:**

- **Be sure that the positive and negative sides of the transmitter battery are positioned correctly.**
- **Be careful not to bend the terminals of the transmitter battery during installation.**
- **Keep the interior of the transmitter case free of dust, water, and oil.**

(b) Install the door control transmitter module into the transmitter housing case.

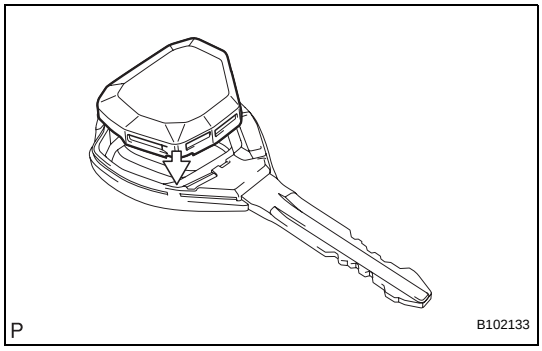

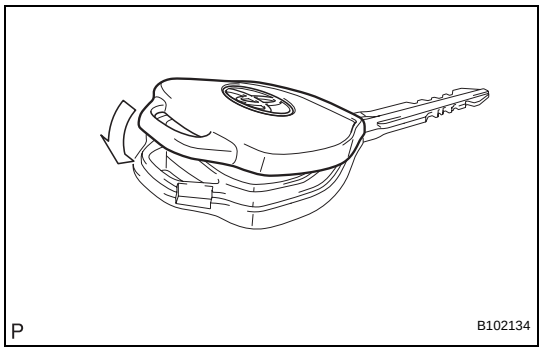


(c) Install the transmitter housing cover securely onto the transmitter housing case.
HINT:
After the installation, press one of the transmitter switches and check that the LED illuminates.

# DOOR CONTROL SWITCH

## COMPONENTS

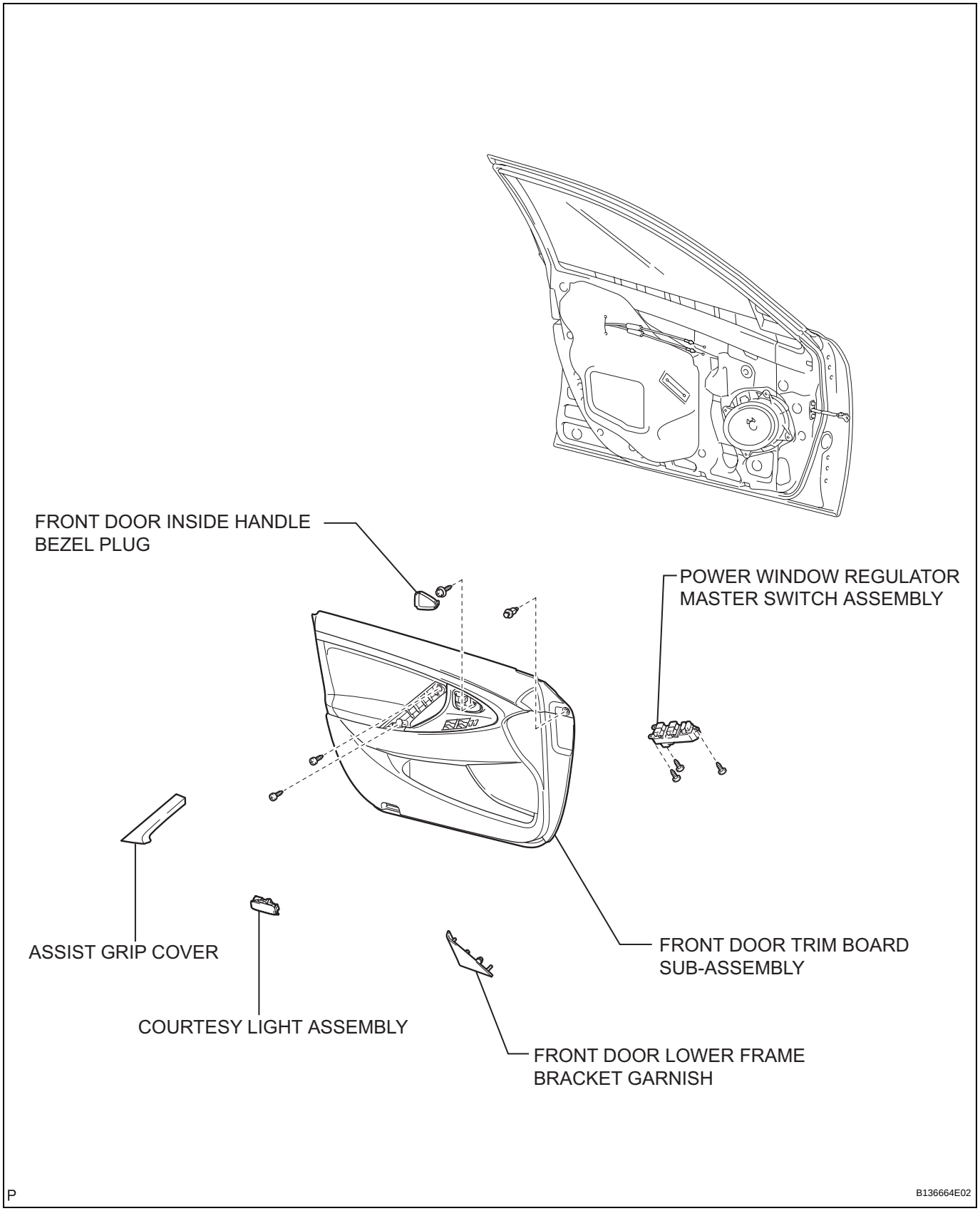

# REMOVAL

1. **REMOVE FRONT DOOR LOWER FRAME BRACKET GARNISH (See page ED-14)**
2. **REMOVE FRONT DOOR INSIDE HANDLE BEZEL PLUG (See page ED-14)**
3. **REMOVE ASSIST GRIP COVER (See page ED-15)**
4. **REMOVE COURTESY LIGHT ASSEMBLY (See page ED-15)**
5. **REMOVE FRONT DOOR TRIM BOARD SUB-ASSEMBLY (See page ED-15)**
6. **REMOVE POWER WINDOW REGULATOR MASTER SWITCH ASSEMBLY**
   (a) Disconnect the connector.
   (b) Remove the 3 screws and the power window regulator master switch assembly.

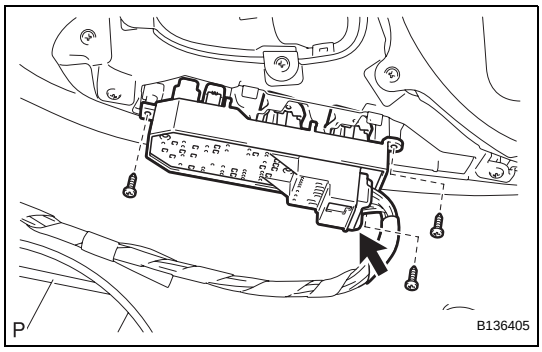


# INSPECTION

1. **INSPECT DOOR CONTROL SWITCH (for Driver Side)**
   (a) Measure the resistance of the door control switch.
   **Standard resistance**

| Tester Connection | Switch Condition | Specified Condition |
|---|---|---|
| 2 - 1 | Lock | Below 1 Ω |
| 2 - 1 | OFF (Free) | 10 kΩ or higher |
| 9 - 1 | Unlock | Below 1 Ω |
| 9 - 1 | OFF (Free) | 10 kΩ or higher |

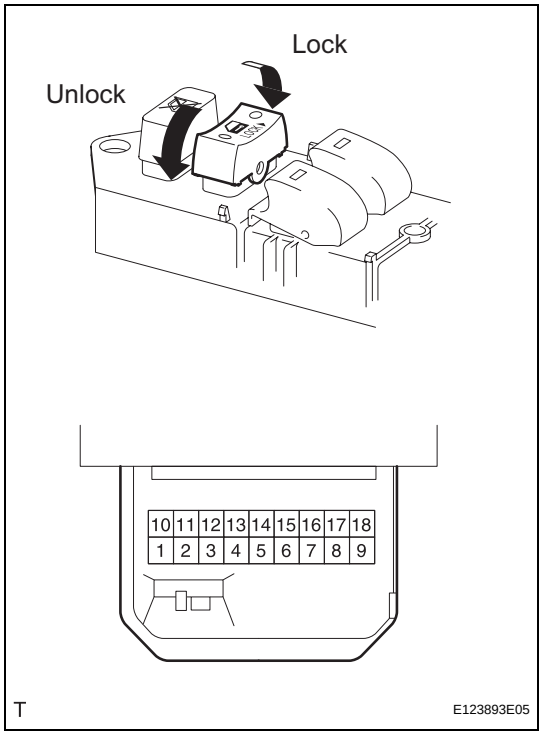

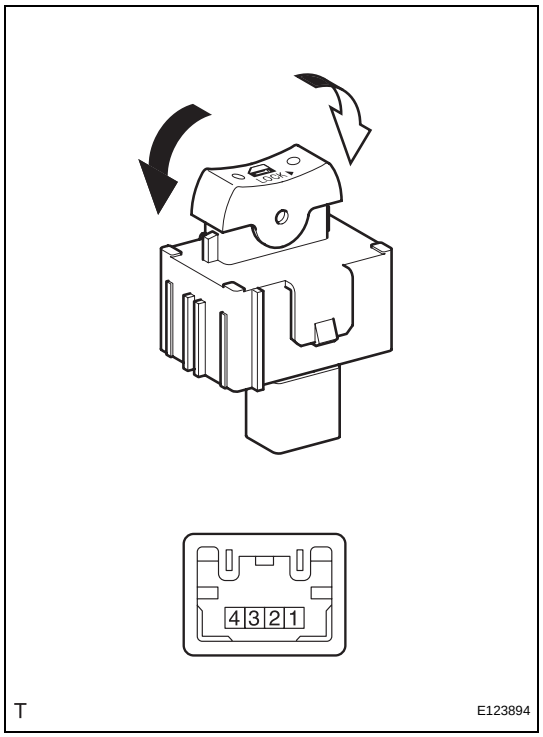


2. **INSPECT DOOR CONTROL SWITCH (for Front Passenger Side)**
   (a) Measure the resistance according to the value(s) in the table below.
   **Standard resistance**

| Tester Connection | Switch Condition | Specified Condition |
|---|---|---|
| 4 - 3 | Lock | Below 1 Ω |
| 4 - 3<br>2 - 3 | OFF (Free) | 10 kΩ or higher |
| 2 - 3 | Unlock | Below 1 Ω |

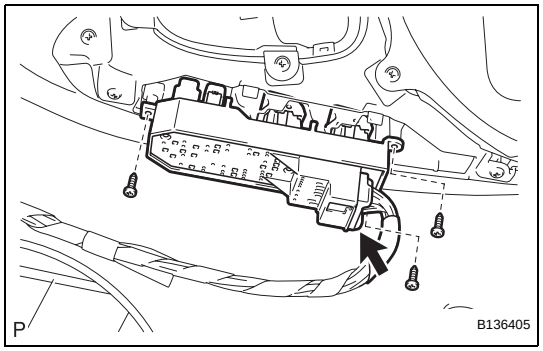


# INSTALLATION

1. **INSTALL POWER WINDOW REGULATOR MASTER SWITCH ASSEMBLY**
   (a) Install the power window regulator master switch assembly with the 3 screws.
   (b) Connect the connector.
2. **REMOVE FRONT DOOR TRIM BOARD SUB-ASSEMBLY (See page ED-33)**
3. **REMOVE COURTESY LIGHT ASSEMBLY (See page ED-34)**
4. **REMOVE ASSIST GRIP COVER (See page ED-34)**
5. **REMOVE FRONT DOOR INSIDE HANDLE BEZEL PLUG (See page ED-34)**
6. **REMOVE FRONT DOOR LOWER FRAME BRACKET GARNISH (See page ED-34)**

# UNLOCK WARNING SWITCH

## COMPONENTS

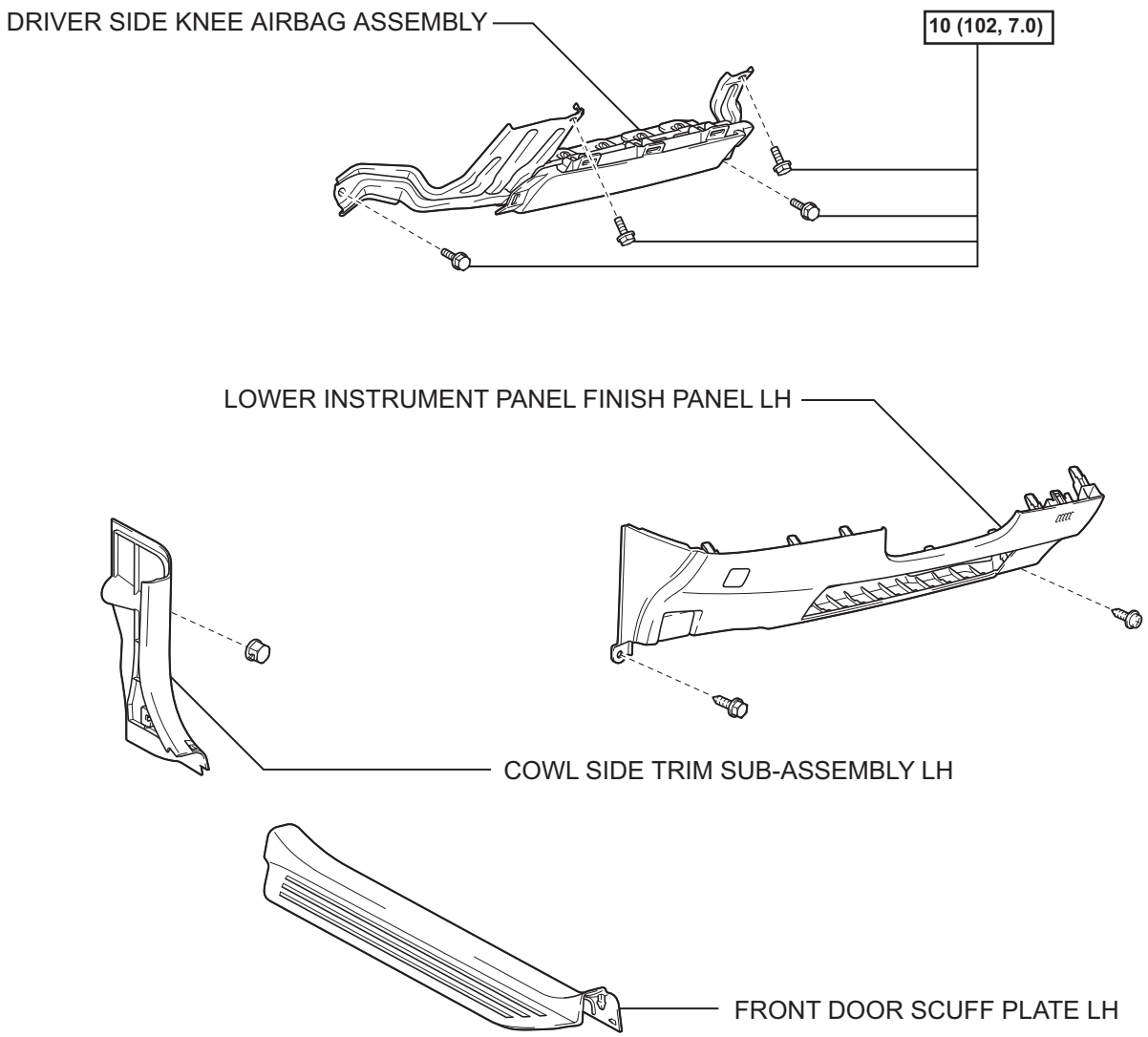


N*m (kgf*cm, ft.*lbf) : Specified torque

P

C133871E04

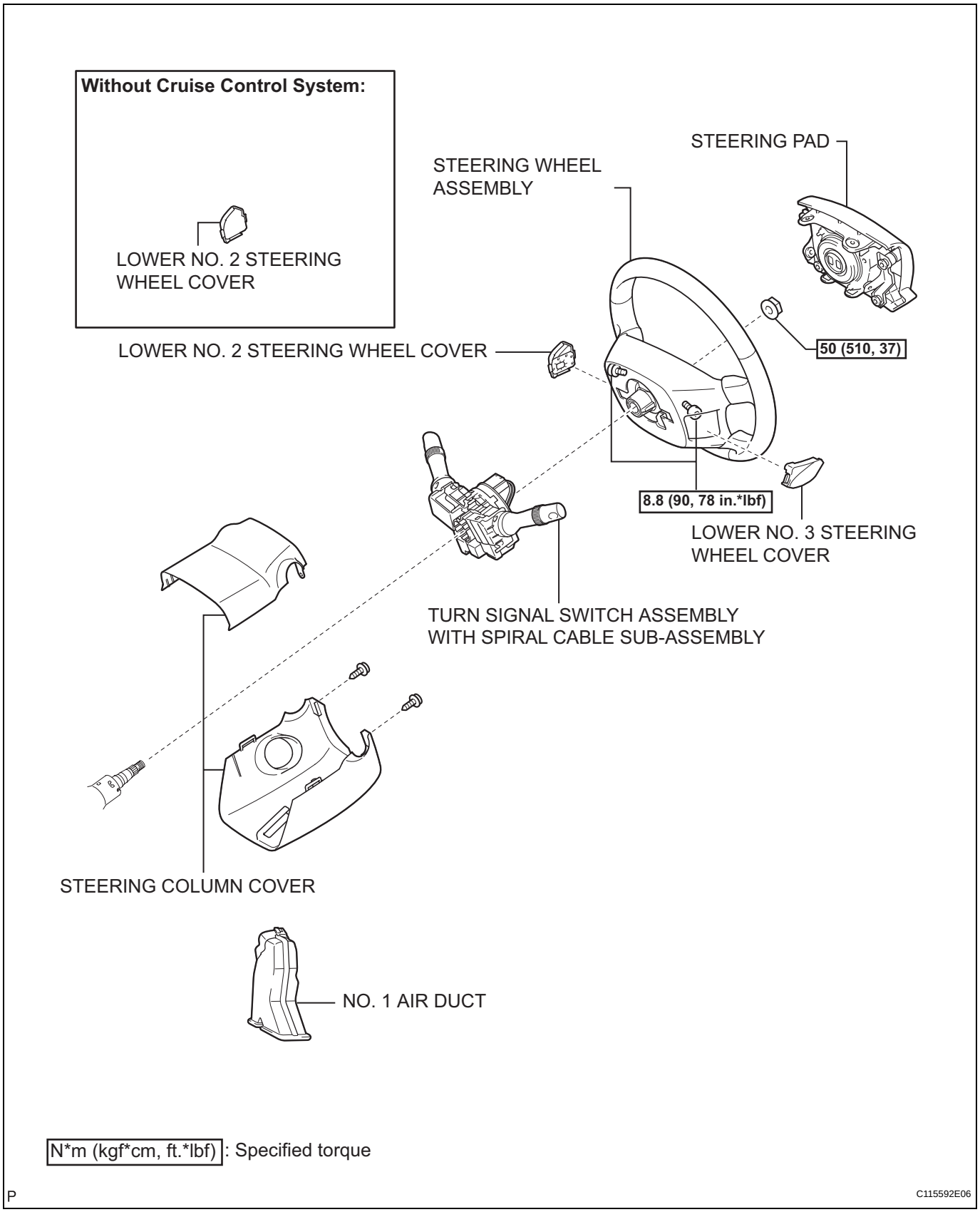


N*m (kgf*cm, ft.*lbf) : Specified torque

P

C115592E06

DL

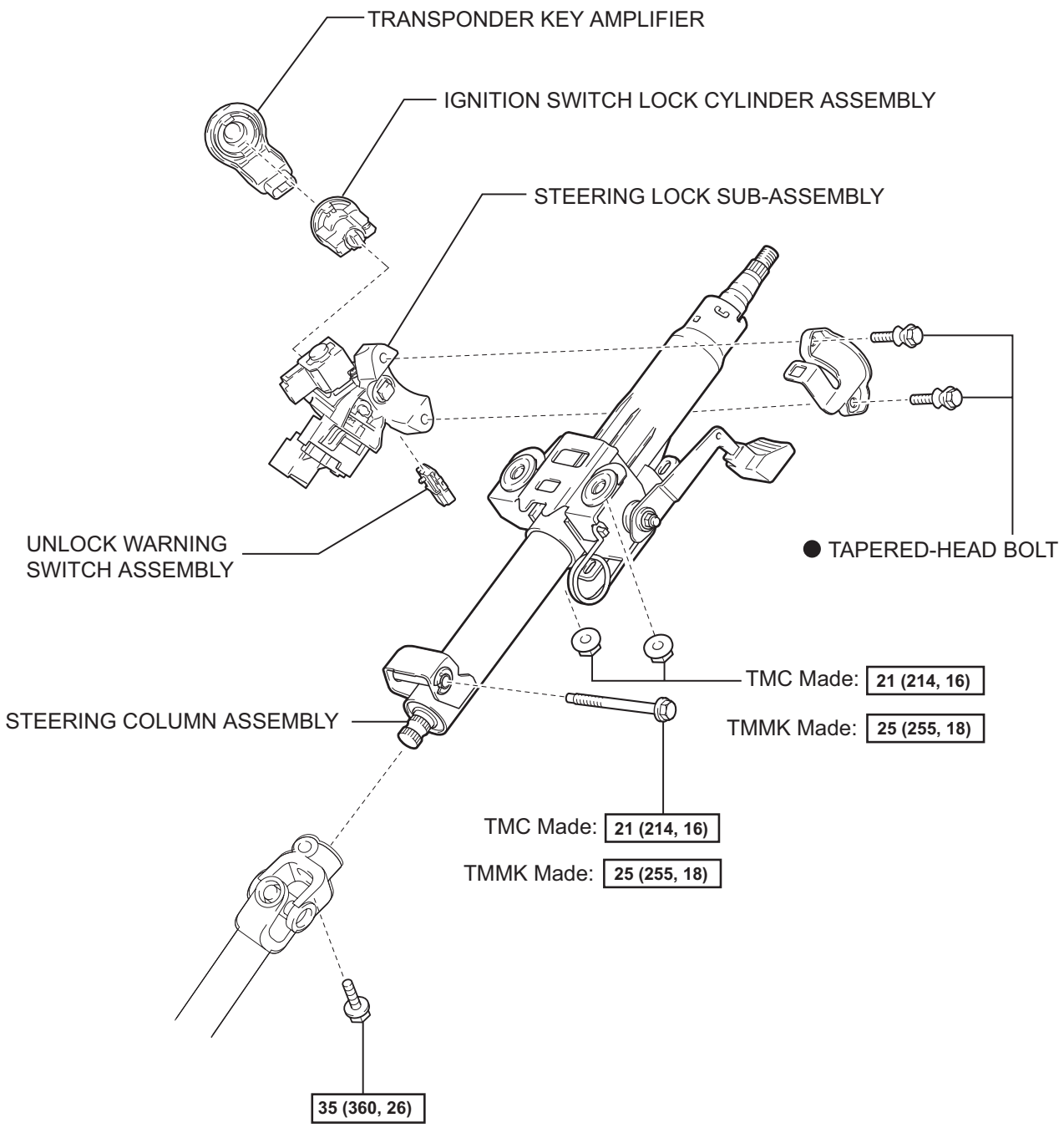


● Non-reusable part

N*m (kgf*cm, ft.*lbf): Specified torque

P

B139059E01

## REMOVAL

1. **PRECAUTION**
   (See page RS-1)
2. **PLACE FRONT WHEELS FACING STRAIGHT AHEAD**
3. **DISCONNECT CABLE FROM NEGATIVE BATTERY TERMINAL**
   (See page RS-1)
4. **REMOVE FRONT WHEEL LH**
5. **REMOVE FRONT DOOR SCUFF PLATE LH (See page IR-24)**
6. **REMOVE COWL SIDE TRIM SUB-ASSEMBLY LH (See page IR-25)**
7. **REMOVE LOWER INSTRUMENT PANEL FINISH PANEL LH (See page IP-20)**
8. **REMOVE DRIVER SIDE KNEE AIRBAG ASSEMBLY (See page RS-370)**
9. **REMOVE LOWER NO. 2 STEERING WHEEL COVER**
10. **REMOVE LOWER NO. 3 STEERING WHEEL COVER**
11. **REMOVE STEERING PAD (See page RS-350)**
12. **REMOVE STEERING WHEEL ASSEMBLY (See page SR-38)**
13. **REMOVE STEERING COLUMN COVER (See page SR-39)**
14. **REMOVE TURN SIGNAL SWITCH ASSEMBLY WITH SPIRAL CABLE SUB-ASSEMBLY (See page SR-39)**
15. **REMOVE NO. 1 AIR DUCT (See page SR-39)**
16. **REMOVE STEERING COLUMN ASSEMBLY (See page SR-39)**
17. **REMOVE TRANSPONDER KEY AMPLIFIER (See page SR-42)**
18. **REMOVE STEERING COLUMN UPPER WITH SWITCH BRACKET ASSEMBLY (See page SR-43)**
19. **REMOVE IGNITION SWITCH LOCK CYLINDER ASSEMBLY (See page SR-43)**
20. **REMOVE UNLOCK WARNING SWITCH ASSEMBLY**
    (a) Remove the unlock warning switch assembly by pushing up the center part and releasing the 2 claws.

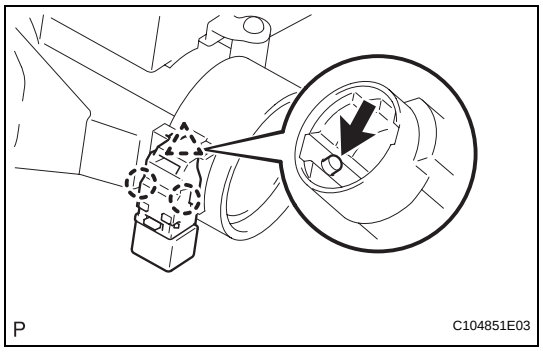


DL

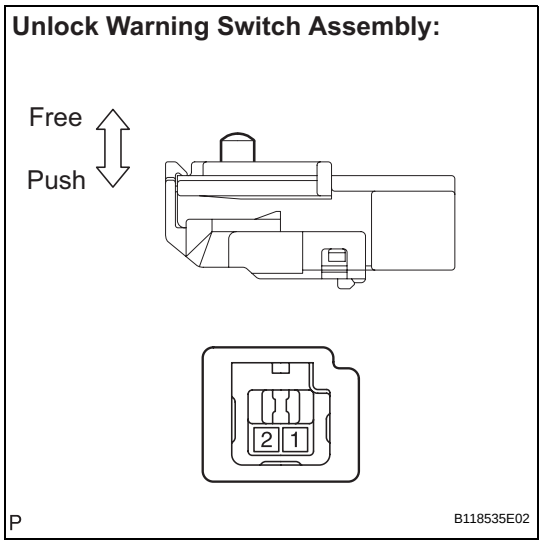


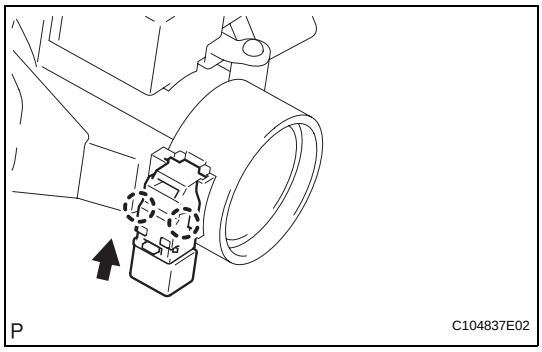


# INSPECTION

1. **INSPECT UNLOCK WARNING SWITCH ASSEMBLY**
   (a) Measure the resistance according to the value(s) in the table below.
   **Standard resistance**

| Tester Connection | Condition | Specified Condition |
|---|---|---|
| 1 - 2 | Switch free (Key removed) | 10 kΩ or higher |
| 1 - 2 | Switch pushed (Key set) | Below 1 Ω |

   If the result as specified, replace the unlock warning switch assembly.

# INSTALLATION

1. **INSTALL UNLOCK WARNING SWITCH ASSEMBLY**
   (a) Engage the 2 claws to install the unlock warning switch assembly to the steering lock sub-assembly.
2. **INSTALL IGNITION SWITCH LOCK CYLINDER ASSEMBLY (See page SR-46)**
3. **INSPECT STEERING LOCK OPERATION**
4. **INSTALL STEERING COLUMN UPPER WITH SWITCH BRACKET ASSEMBLY (See page SR-46)**
5. **INSTALL TRANSPONDER KEY AMPLIFIER (See page SR-46)**
6. **INSTALL STEERING COLUMN ASSEMBLY (See page SR-47)**
7. **INSTALL NO. 1 AIR DUCT (See page SR-50)**
8. **PLACE FRONT WHEELS FACING STRAIGHT AHEAD**
9. **INSTALL TURN SIGNAL SWITCH ASSEMBLY WITH SPIRAL CABLE SUB-ASSEMBLY (See page SR-50)**
10. **INSTALL STEERING COLUMN COVER (See page SR-50)**
11. **ADJUST SPIRAL CABLE SUB-ASSEMBLY (See page RS-367)**
12. **INSTALL STEERING WHEEL ASSEMBLY (See page SR-51)**
13. **INSPECT STEERING WHEEL CENTER POINT**
14. **INSPECT STEERING PAD (See page RS-352)**
15. **INSTALL STEERING PAD (See page RS-350)**
16. **INSTALL LOWER NO. 2 STEERING WHEEL COVER**
17. **INSTALL LOWER NO. 3 STEERING WHEEL COVER**
18. **INSTALL DRIVER SIDE KNEE AIRBAG ASSEMBLY (See page RS-370)**

19. **INSTALL LOWER INSTRUMENT PANEL FINISH PANEL LH (See page IP-55)**
20. **INSTALL COWL SIDE TRIM SUB-ASSEMBLY LH (See page IR-54)**
21. **INSTALL FRONT DOOR SCUFF PLATE LH (See page IR-54)**
22. **INSTALL FRONT WHEEL LH (See page SR-51)**
23. **CONNECT CABLE TO NEGATIVE BATTERY TERMINAL**
24. **INSPECT SRS WARNING LIGHT**
    (See page RS-32)

# FRONT DOOR LOCK

## COMPONENTS

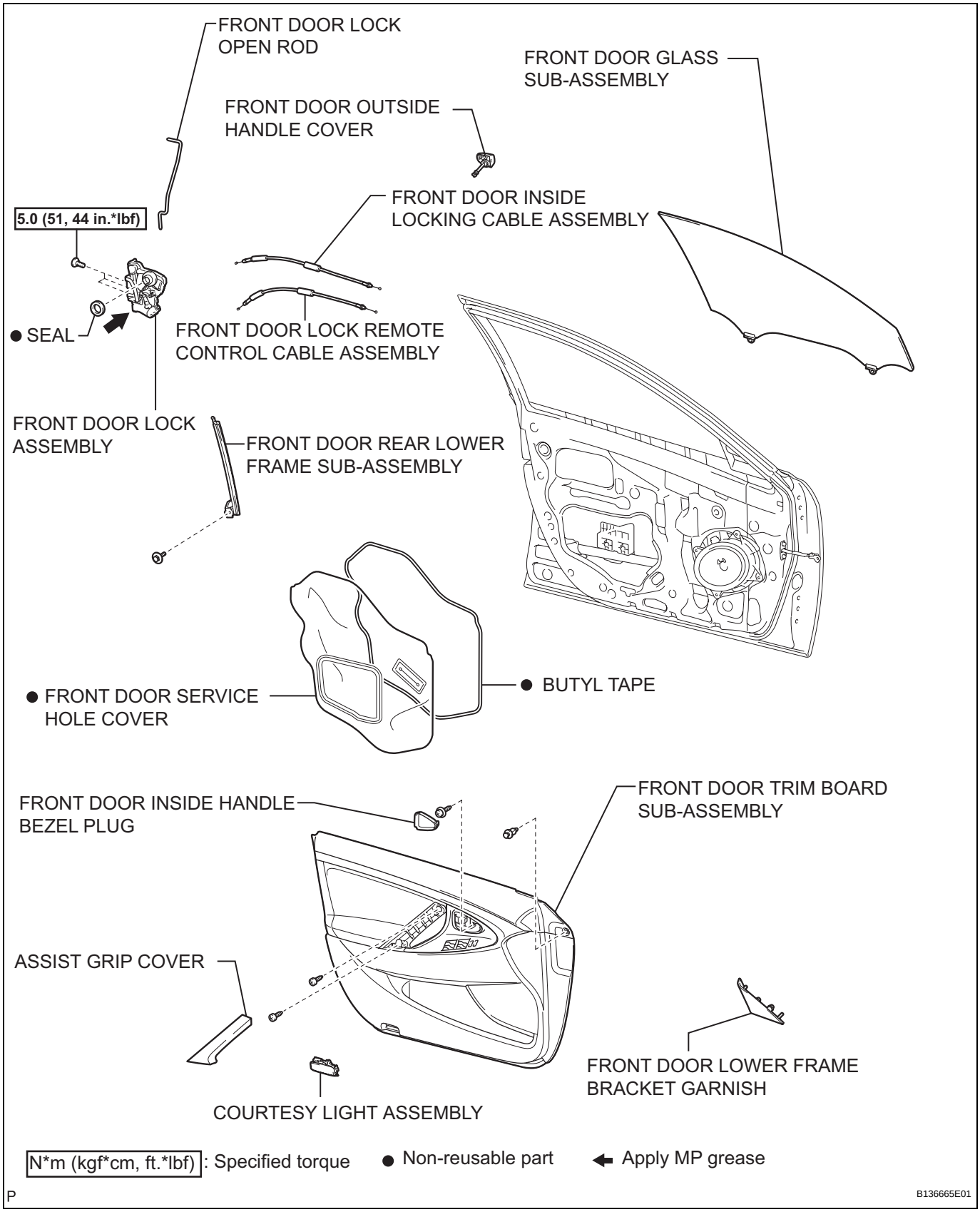


DL

# REMOVAL

1. **REMOVE FRONT DOOR LOWER FRAME BRACKET GARNISH (See page ED-14)**
2. **REMOVE FRONT DOOR INSIDE HANDLE BEZEL PLUG (See page ED-14)**
3. **REMOVE ASSIST GRIP COVER (See page ED-15)**
4. **REMOVE COURTESY LIGHT ASSEMBLY (See page ED-15)**
5. **REMOVE FRONT DOOR TRIM BOARD SUB-ASSEMBLY (See page ED-15)**
6. **REMOVE FRONT DOOR SERVICE HOLE COVER (See page ED-17)**
7. **REMOVE FRONT DOOR GLASS SUB-ASSEMBLY (See page ED-17)**
8. **REMOVE FRONT DOOR REAR LOWER FRAME SUB-ASSEMBLY (See page ED-19)**
9. **REMOVE FRONT DOOR OUTSIDE HANDLE COVER (See page ED-19)**
10. **REMOVE FRONT DOOR LOCK ASSEMBLY**
    (a) Disconnect the connector.
    (b) Using a "torx" socket wrench (T30), remove the 3 screws.
    (c) Slide the front door lock assembly downward and pull out the front door lock open rod from the outside handle frame. Remove the front door lock assembly and cables as a unit.
    (d) Remove the front door lock open rod from the front door lock assembly.
    (e) Remove the door lock wiring harness seal from the front door lock assembly.

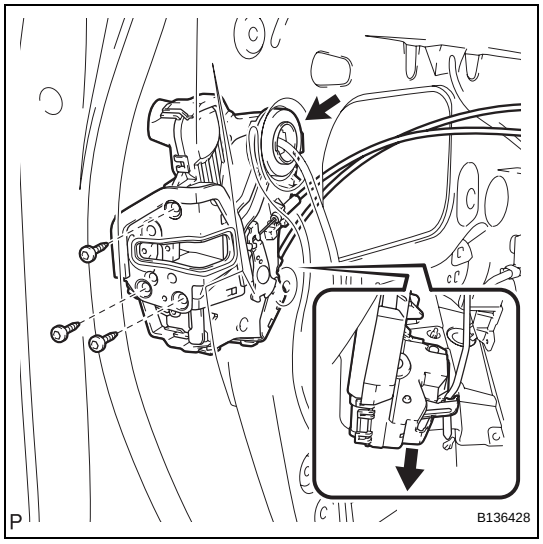


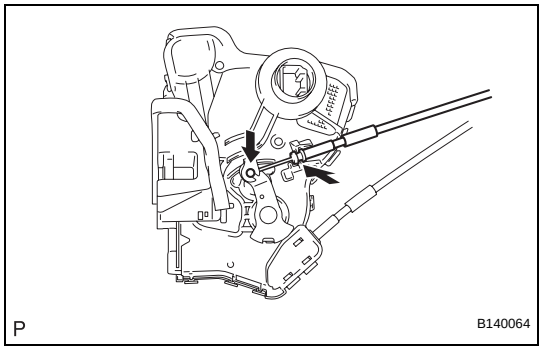


    (f) Remove the front door lock remote control cable assembly.

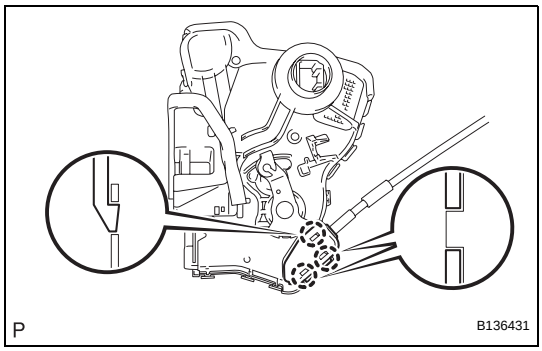


(g) Using a screwdriver, disengage the 3 claws.
HINT:
Tape the screwdriver tip before use.

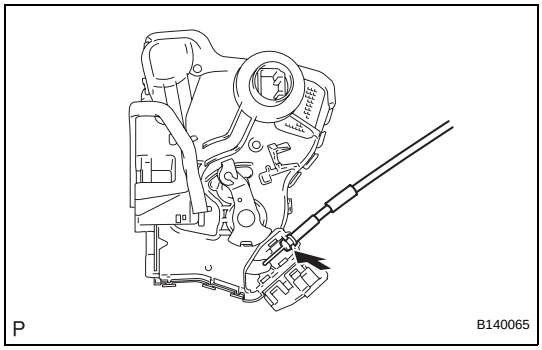


(h) Remove the front door inside locking cable assembly.

# INSPECTION

**1. INSPECT FRONT DOOR LOCK LH ASSEMBLY**

(a) Remove the front door lock assembly LH.

(b) Check operation of the door lock motor.

(1) Apply battery voltage and check operation of the door lock motor.

**OK**

| Measurement Condition | Specified Condition |
|---|---|
| **Battery positive (+) → Terminal 4<br>Battery negative (-) → Terminal 1** | **Lock** |
| **Battery positive (+) → Terminal 1<br>Battery negative (-) → Terminal 4** | **Unlock** |

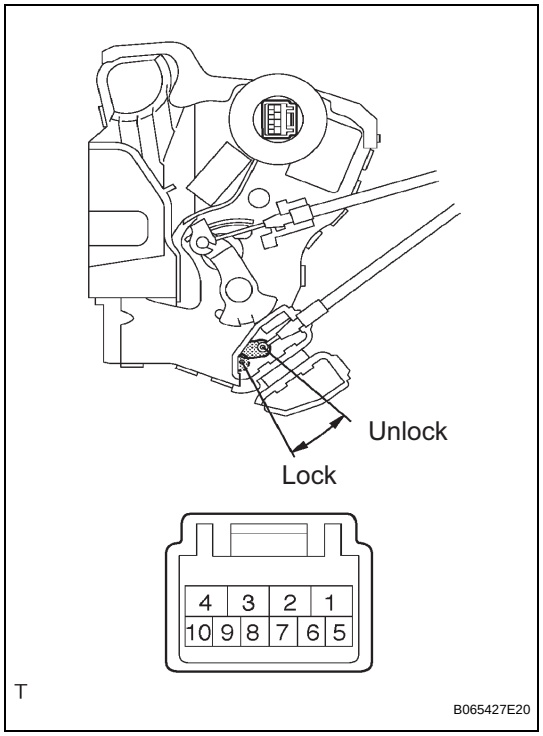


(c) Check operation of the door key lock and unlock switch.

(1) Measure the resistance according to the value(s) in the table below.

**Standard resistance**

| Tester Connection | Condition | Specified Condition |
|---|---|---|
| **7 - 9** | **ON (Door lock set to LOCK)** | **Below 1 Ω** |
| **7 - 9<br>7 - 10** | **OFF (Free)** | **10 kΩ or higher** |
| **7 - 10** | **ON (Door lock set to UNLOCK)** | **Below 1 Ω** |

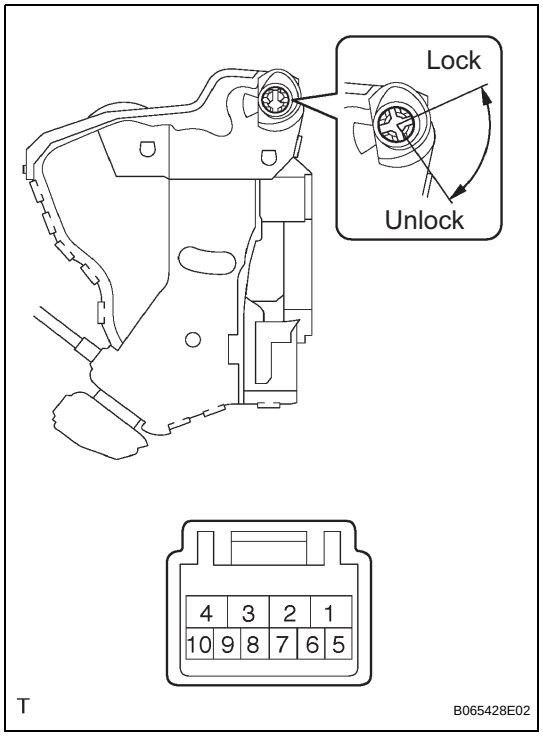

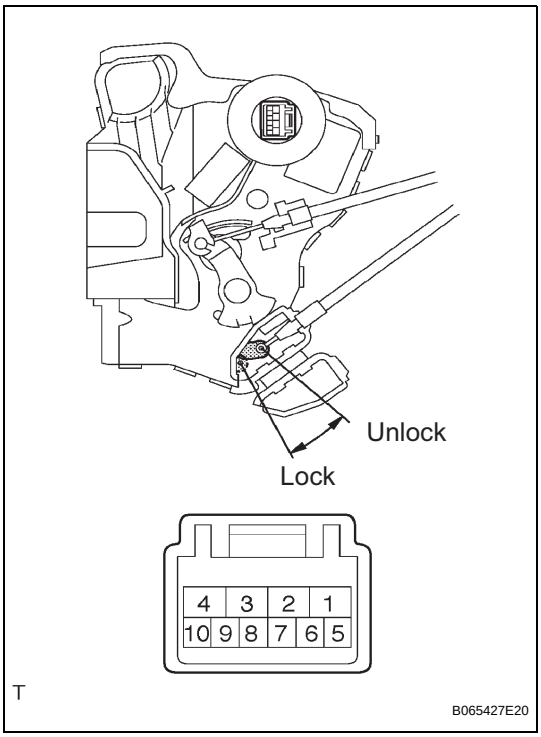


(d) Check operation of the door unlock detection switch.

(1) Measure the resistance according to the value(s) in the table below.

**Standard resistance**

| Tester Connection | Measurement Condition | Door Lock Condition | Specified Condition |
|---|---|---|---|
| 7 - 8 | Battery positive (+) → Terminal 4<br>Battery negative (-) → Terminal 1 | Lock | 10 kΩ or higher |
| 7 - 8 | Battery positive (+) → Terminal 1<br>Battery negative (-) → Terminal 4 | Unlock | Below 1 Ω |

**2. INSPECT FRONT DOOR LOCK RH ASSEMBLY**

(a) Remove the front door lock assembly RH.

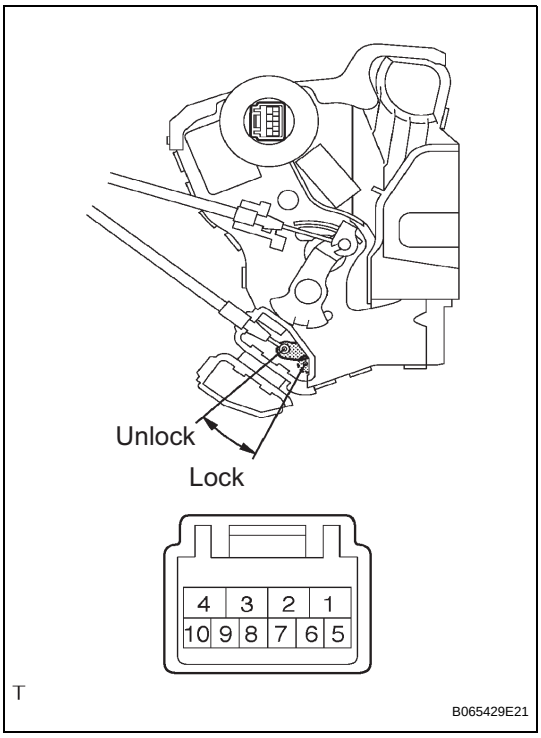


(b) Check operation of the door lock motor.

(1) Apply battery voltage and check operation of the door lock motor.

**OK**

| Measurement Condition | Specified Condition |
|---|---|
| Battery positive (+) → Terminal 4<br>Battery negative (-) → Terminal 1 | Lock |
| Battery positive (+) → Terminal 1<br>Battery negative (-) → Terminal 4 | Unlock |

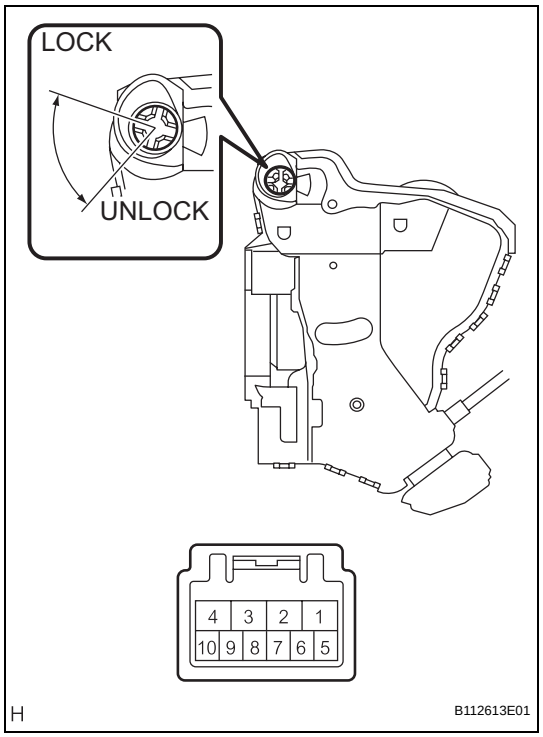


(c) Check operation of the door key lock and unlock switch.

(1) Measure the resistance according to the value(s) in the table below.

**Standard resistance**

| Tester Connection | Condition | Specified Condition |
|---|---|---|
| 5 - 8 | ON (Door lock set to UNLOCK) | Below 1 Ω |
| 5 - 8<br>6 - 8 | OFF (Free) | 10 kΩ or higher |
| 6 - 8 | ON (Door lock set to LOCK) | Below 1 Ω |

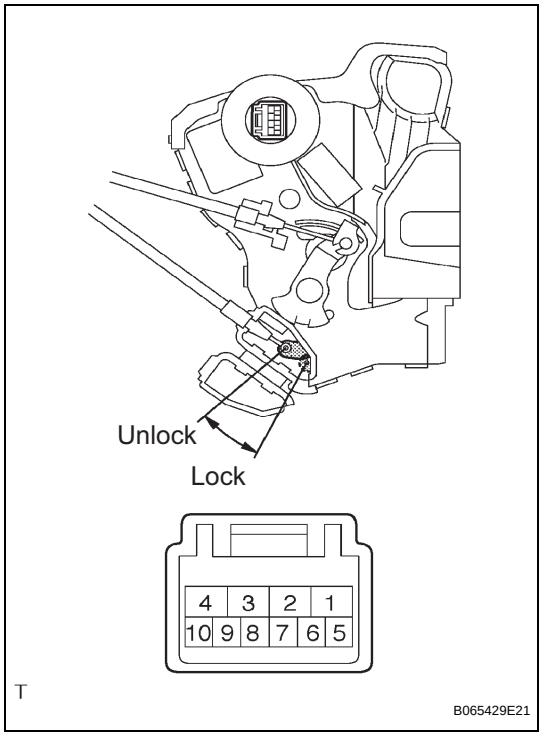


(d) Check operation of the door unlock detection switch.

(1) Measure the resistance according to the value(s) in the table below.

**Standard resistance**

| Tester Connection | Measurement Condition | Door Lock Condition | (Specified Condition) |
|---|---|---|---|
| 7 - 8 | Battery positive (+) → Terminal 4<br>Battery negative (-) → Terminal 1 | LOCK | 10 kΩ or higher |
| 7 - 8 | Battery positive (+) → Terminal 1<br>Battery negative (-) → Terminal 4 | UNLOCK | Below 1 Ω |

# INSTALLATION

**1. INSTALL FRONT DOOR LOCK ASSEMBLY**

**NOTICE:**

- **When reusing the removed front door lock assembly, replace the door lock wiring harness seal on the door lock with a new one.**
- **Do not allow grease or dust to adhere to the surface of the door lock where the seal attaches.**
- **Reusing the door lock wiring harness seal or using a damaged door lock wiring harness seal may allow water intrusion to the connection, and result in a malfunction in the front door lock assembly.**

(a) Install the front door inside locking cable assembly.

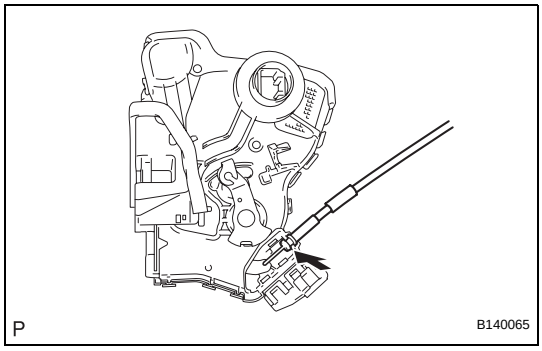


(b) Engage the 3 claws.

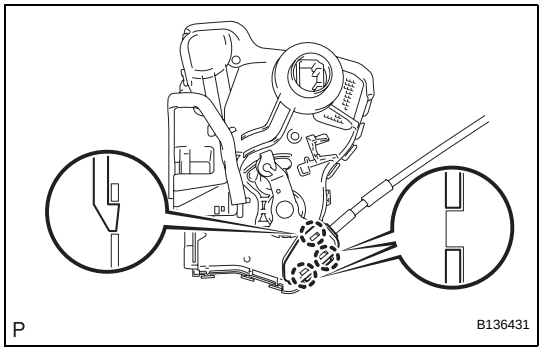


(c) Install the front door lock remote control cable assembly.

(d) Apply MP grease to the sliding parts on the front door lock assembly.

(e) Install a new door lock wiring harness seal to the front door lock assembly.

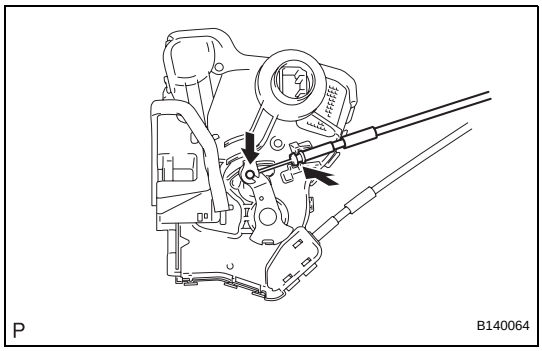

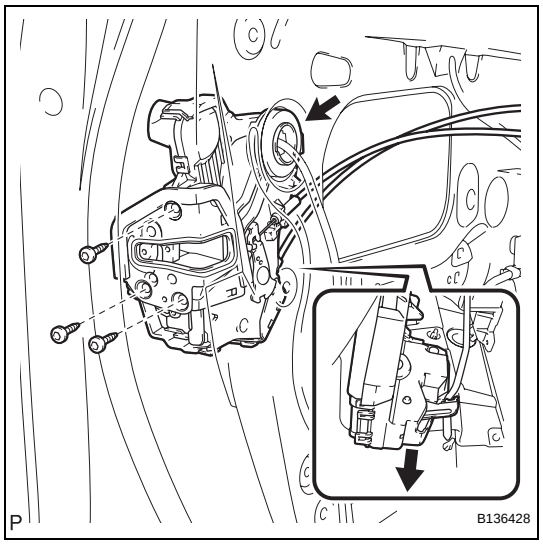


(f) Insert the front door lock open rod to the front door lock assembly, and set the assembly to the front door outside handle frame.

(g) Make sure that the front door lock open rod is securely connected to the front door lock assembly.

(h) Using a "torx" socket wrench (T30), install the front door lock assembly with the 3 screws.
**Torque: 5.0 N*m (51 kgf*cm, 44 in.*lbf)**

(i) Connect the connector.

2. **INSTALL FRONT DOOR OUTSIDE HANDLE COVER (See page ED-29)**

3. **INSTALL FRONT DOOR REAR LOWER FRAME SUB-ASSEMBLY (See page ED-30)**

4. **INSTALL FRONT DOOR GLASS SUB-ASSEMBLY (See page ED-31)**

5. **INSTALL FRONT DOOR SERVICE HOLE COVER (See page ED-32)**

6. **INSTALL FRONT DOOR TRIM BOARD SUB-ASSEMBLY (See page ED-33)**

7. **INSTALL COURTESY LIGHT ASSEMBLY (See page ED-34)**

8. **INSTALL ASSIST GRIP COVER (See page ED-34)**

9. **INSTALL FRONT DOOR INSIDE HANDLE BEZEL PLUG (See page ED-34)**

10. **INSTALL FRONT DOOR LOWER FRAME BRACKET GARNISH (See page ED-34)**

# INSPECTION

## 1. INSPECT REAR DOOR LOCK LH ASSEMBLY

(a) Remove the rear door lock assembly LH.

(b) Check operation of the door lock motor.

(1) Apply battery voltage and check operation of the door lock motor.

**OK**

| Measurement Condition | Specified Condition |
|---|---|
| Battery positive (+) → Terminal 4<br>Battery negative (-) → Terminal 1 | Lock |
| Battery positive (+) → Terminal 1<br>Battery negative (-) → Terminal 4 | Unlock |

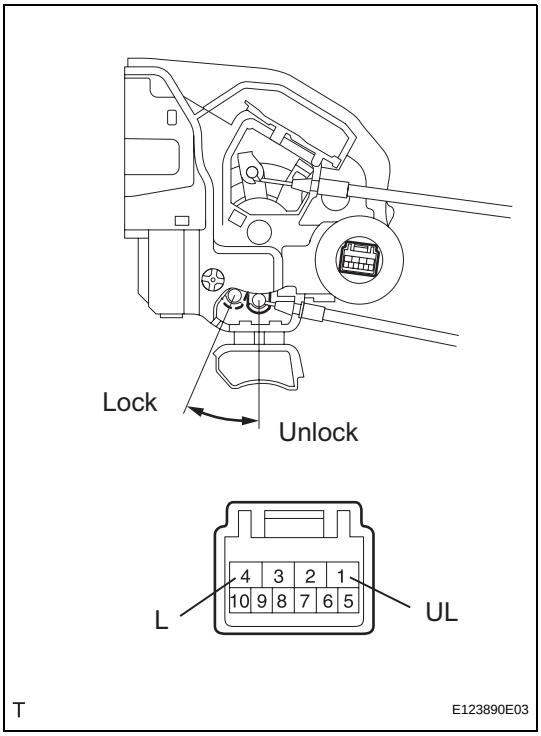


(c) Check operation of the unlock detection switch.

(1) Measure the resistance according to the value(s) in the table below.

**Standard resistance**

| Tester Connection | Measurement Condition | Door Lock Condition | (Specified Condition) |
|---|---|---|---|
| 6 - 9 | Battery positive (+) → Terminal 4<br>Battery negative (-) → Terminal 1 | Lock | 10 kΩ or higher |
| 6 - 9 | Battery positive (+) → Terminal 1<br>Battery negative (-) → Terminal 4 | Unlock | Below 1 Ω |

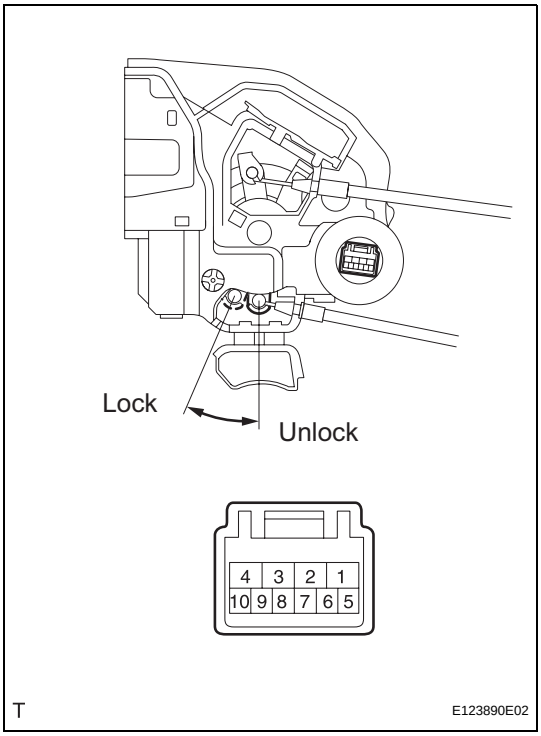


## 2. INSPECT REAR DOOR LOCK RH ASSEMBLY

(a) Remove the rear door lock assembly RH.

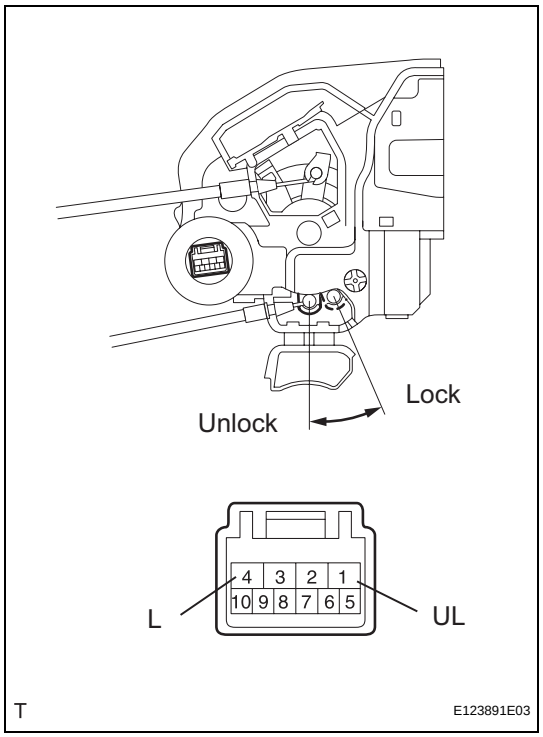


(b) Check operation of the door lock motor.
(1) Apply battery voltage and check operation of the door lock motor.
**OK**

| Measurement Condition | Specified Condition |
|---|---|
| **Battery positive (+) → Terminal 4<br>Battery negative (-) → Terminal 1** | **Lock** |
| **Battery positive (+) → Terminal 1<br>Battery negative (-) → Terminal 4** | **Unlock** |

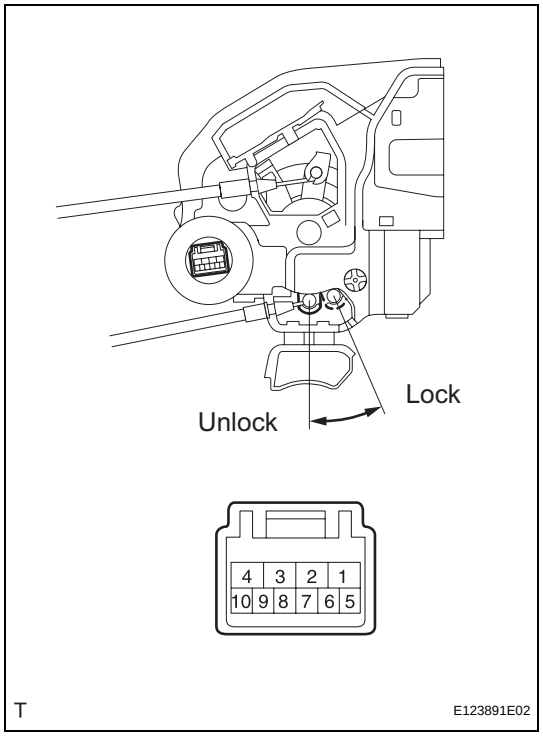


(c) Check operation of the unlock detection switch.
(1) Measure the resistance according to the value(s) in the table below.
**Standard resistance**

| Tester Connection | Measurement Condition | Door Lock Condition | (Specified Condition) |
|---|---|---|---|
| **6 - 9** | **Battery positive (+) → Terminal 4<br>Battery negative (-) → Terminal 1** | **Lock** | **10 kΩ or higher** |
| **6 - 9** | **Battery positive (+) → Terminal 1<br>Battery negative (-) → Terminal 4** | **Unlock** | **Below 1 Ω** |

# REAR DOOR LOCK

## COMPONENTS

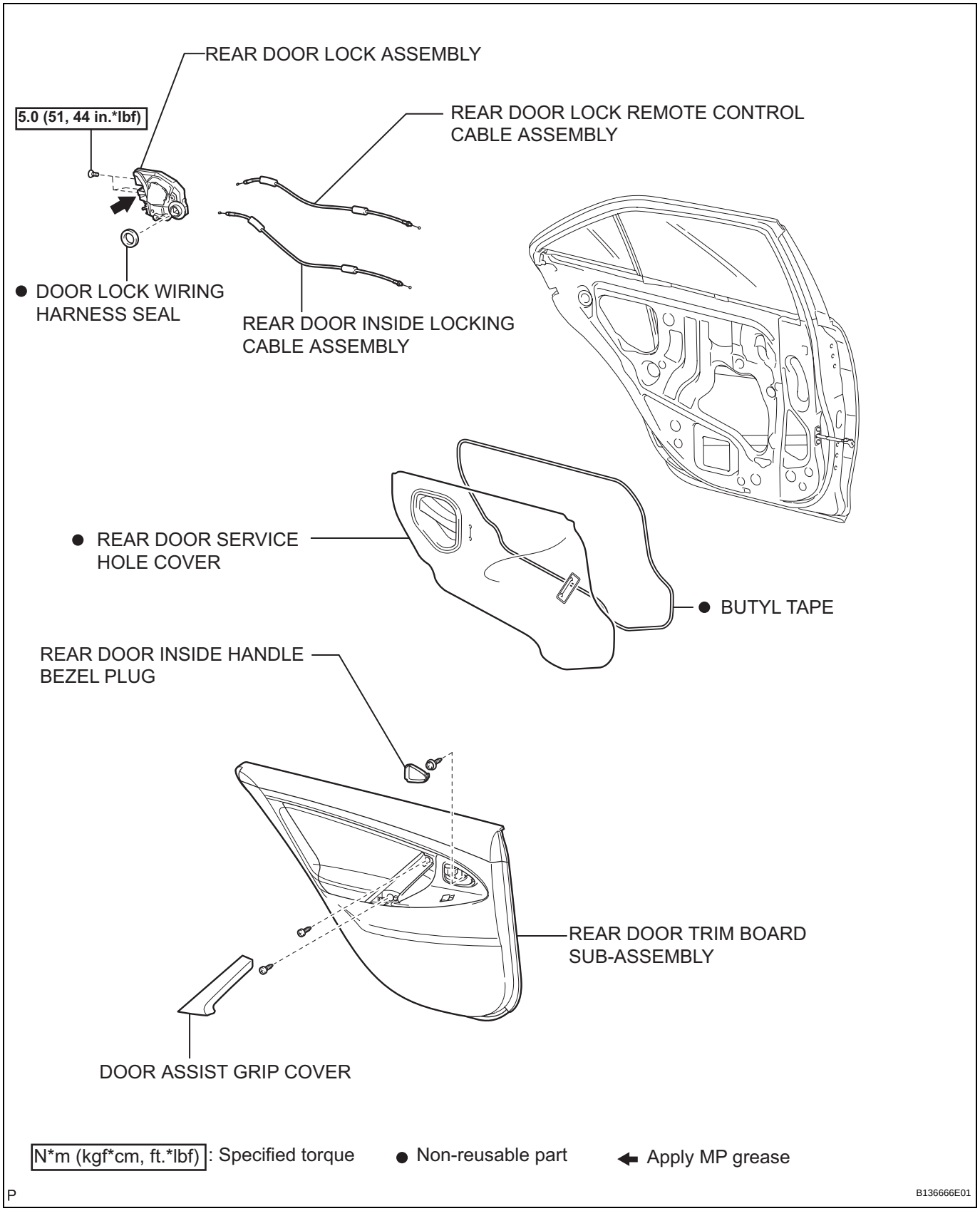


DL

# REMOVAL

1. **REMOVE REAR DOOR INSIDE HANDLE BEZEL PLUG (See page ED-38)**
2. **REMOVE DOOR ASSIST GRIP COVER (See page ED-38)**
3. **REMOVE REAR DOOR TRIM BOARD SUB-ASSEMBLY (See page ED-39)**
4. **REMOVE REAR DOOR SERVICE HOLE COVER (See page ED-41)**
5. **REMOVE REAR DOOR LOCK ASSEMBLY**
   (a) Using a "torx" socket wrench (T30), remove the 3 screws.
   (b) Move the rear door lock assembly downward and pull the release plate out of the rear door outside handle frame.
   (c) Remove the door lock wiring harness seal from the rear door lock assembly.

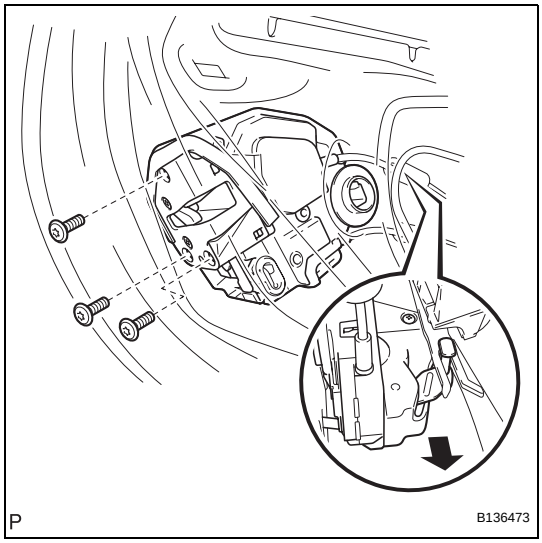


   (d) Using a screwdriver, disengage the claw.
   HINT:
   Tape the screwdriver tip before use.

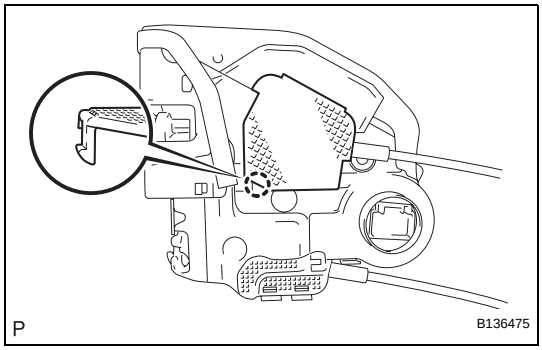


   (e) Remove the rear door inside locking cable assembly.

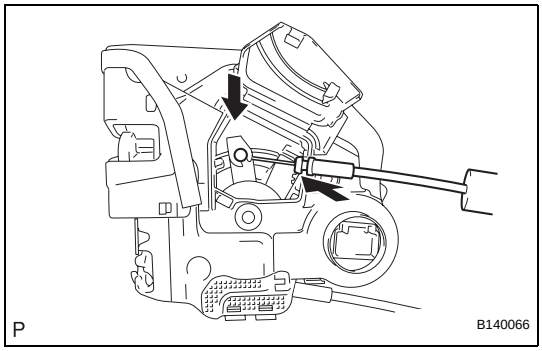

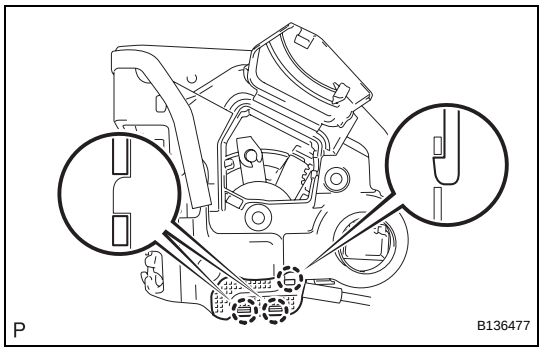


(f) Using a screwdriver, disengage the 3 claws.
HINT:
Tape the screwdriver tip before use.

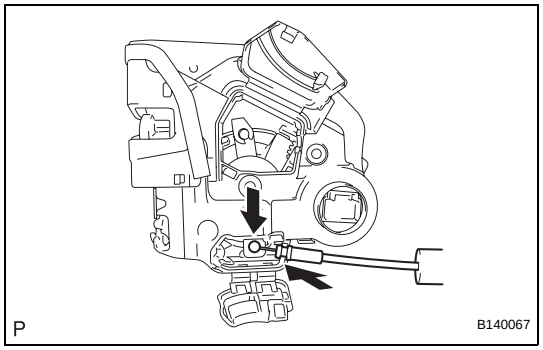


(g) Remove the rear door inside locking cable assembly.

# INSTALLATION

**1. INSTALL REAR DOOR LOCK ASSEMBLY**

**NOTICE:**

- **When reusing the removed rear door lock assembly, replace the door lock wiring harness seal on the door lock with a new one.**
- **Do not allow grease or dust to adhere to the surface of the door lock where the seal attaches.**
- **Reusing the door lock wiring harness seal or using a damaged door lock wiring harness seal may allow water intrusion to the connection, and result in a malfunction in the rear door lock assembly.**

(a) Install the rear door inside locking cable assembly.

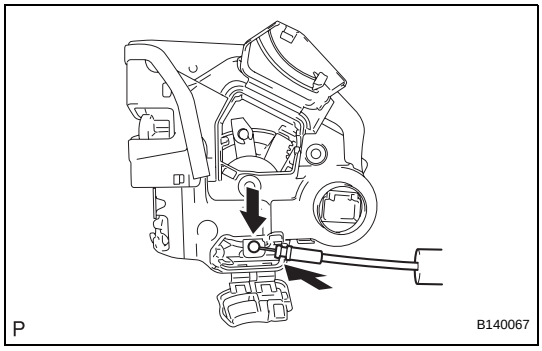


(b) Engage the 3 claws.

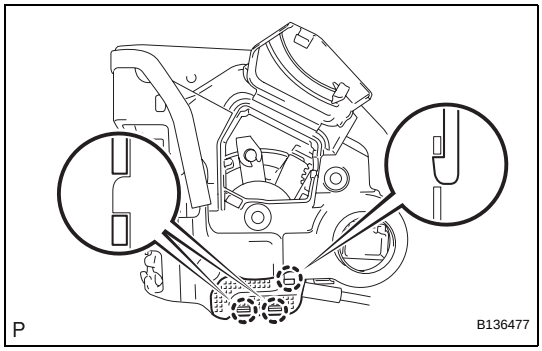


(c) Install the rear door lock remote control cable assembly.

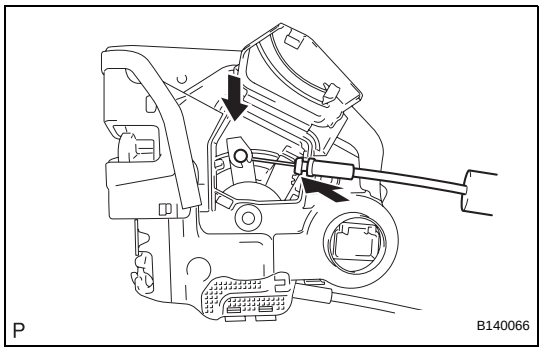

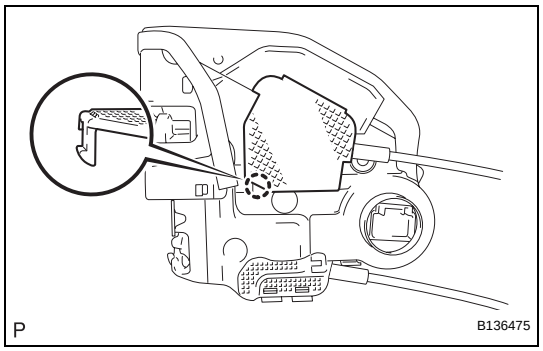


(d) Engage the claw.
(e) Apply MP grease to the sliding parts on the rear door lock assembly.
(f) Install a new door lock wiring harness seal to the rear door lock assembly.

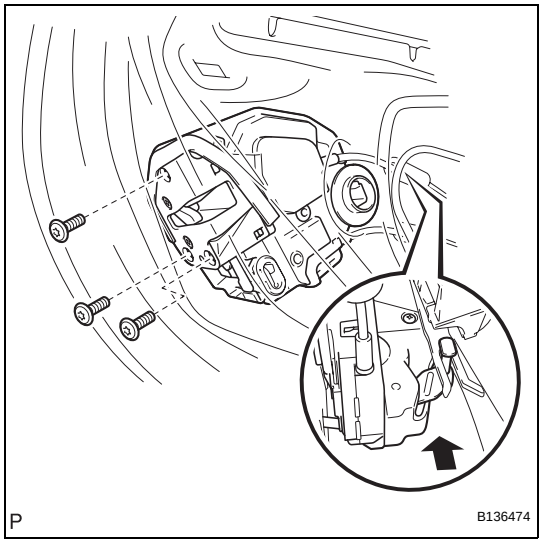


(g) Insert the rear door lock assembly to the rear door outside handle release plate, and set the assembly to the rear door panel.
(h) Make sure that the rear door outside handle frame release plate is securely connected to the rear door lock assembly.
(i) Using a "torx" socket wrench (T30), install the rear door lock assembly with the 3 screws.
**Torque: 5.0 N*m (51 kgf*cm, 44 in.*lbf)**
(j) Connect the connector.

**2. INSTALL REAR DOOR SERVICE HOLE COVER (See page ED-53)**

**3. INSTALL REAR DOOR TRIM BOARD SUB-ASSEMBLY (See page ED-55)**

**4. INSTALL DOOR ASSIST GRIP COVER (See page ED-56)**

**5. INSTALL REAR DOOR INSIDE HANDLE BEZEL PLUG (See page ED-56)**

# ENTRY LOCK AND UNLOCK SWITCH

## COMPONENTS

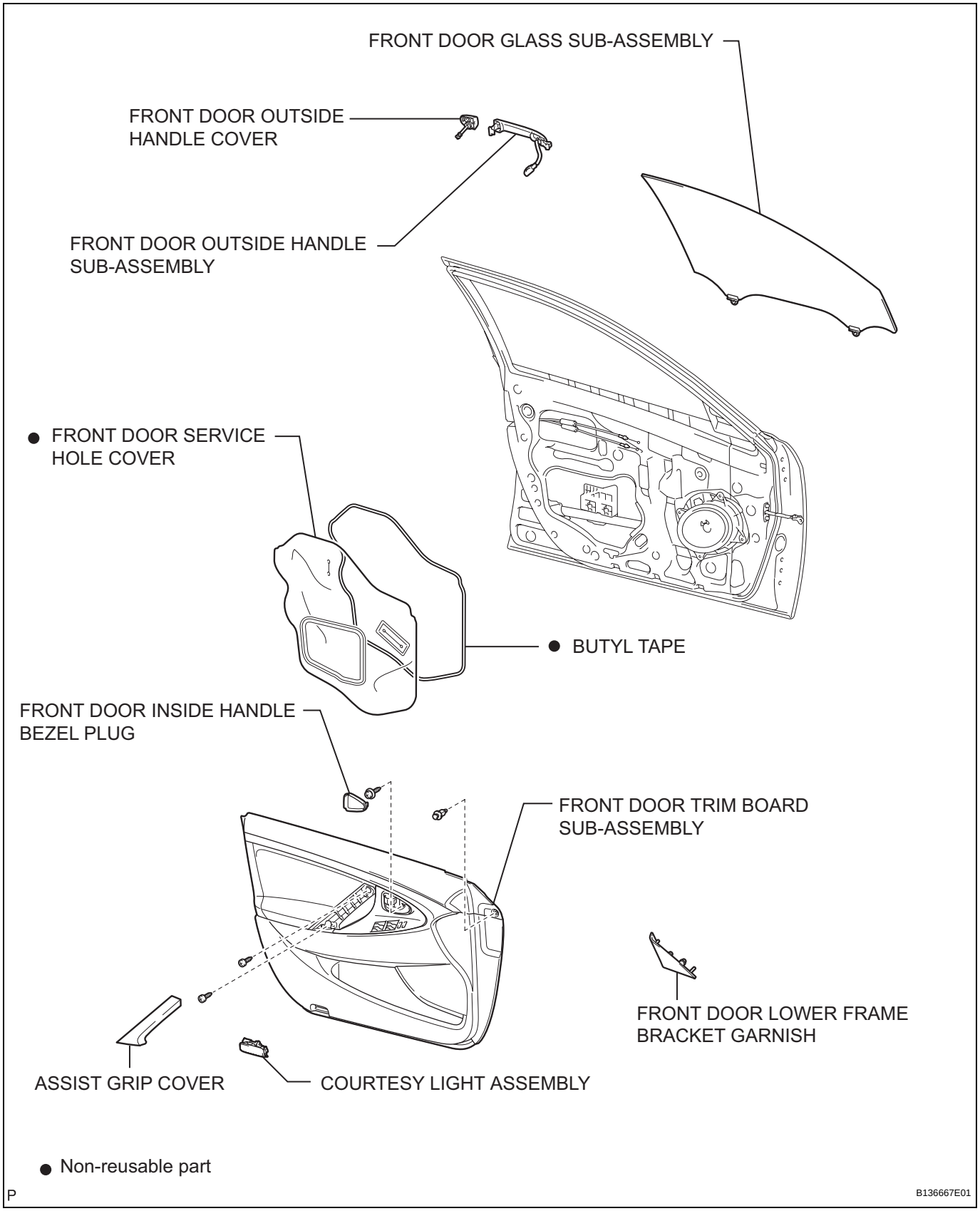


DL

# REMOVAL

1. **REMOVE FRONT DOOR LOWER FRAME BRACKET GARNISH (See page ED-14)**
2. **REMOVE FRONT DOOR INSIDE HANDLE BEZEL PLUG (See page ED-14)**
3. **REMOVE ASSIST GRIP COVER (See page ED-15)**
4. **REMOVE COURTESY LIGHT ASSEMBLY (See page ED-15)**
5. **REMOVE FRONT DOOR TRIM BOARD SUB-ASSEMBLY (See page ED-15)**
6. **REMOVE FRONT DOOR SERVICE HOLE COVER (See page ED-17)**
7. **REMOVE FRONT DOOR GLASS SUB-ASSEMBLY (See page ED-17)**
8. **REMOVE FRONT DOOR OUTSIDE HANDLE COVER (See page ED-19)**
9. **REMOVE FRONT DOOR OUTSIDE HANDLE SUB-ASSEMBLY**
   (a) Disconnect the connector.

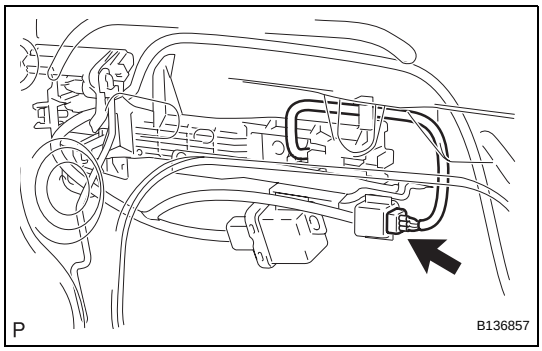


   (b) Remove the front door outside handle assembly as shown in the illustration.

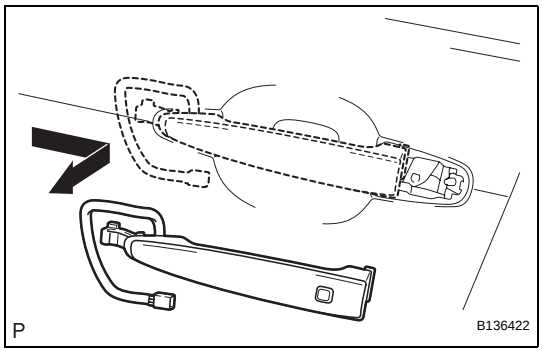

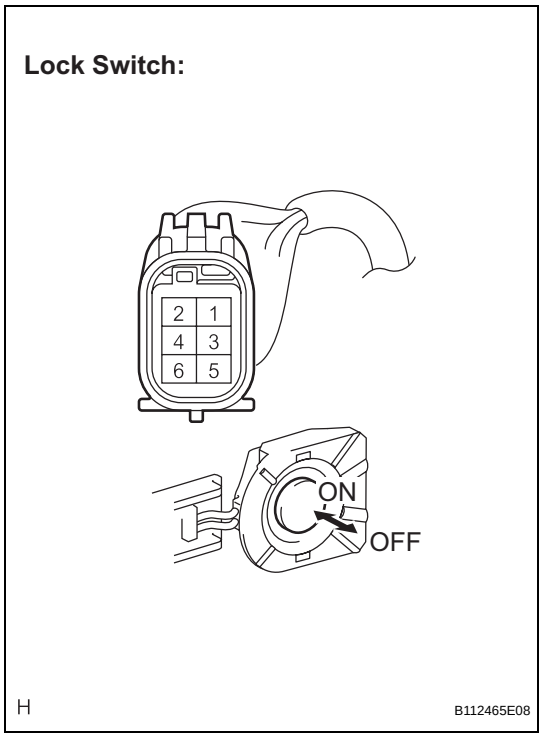


# INSPECTION

1. **INSPECT ENTRY LOCK AND UNLOCK SWITCH**
   (a) Remove the outside handle.
   (b) Disconnect the connectors.
   (c) Measure the resistance according to the value(s) in the table below.
   **Standard resistance**

| Tester Connection | Condition | Specified Condition |
|---|---|---|
| 1 - 3 | Lock switch not pushed (OFF) | 10 kΩ or higher |
| | Lock switch pushed (ON) | Below 1 Ω |

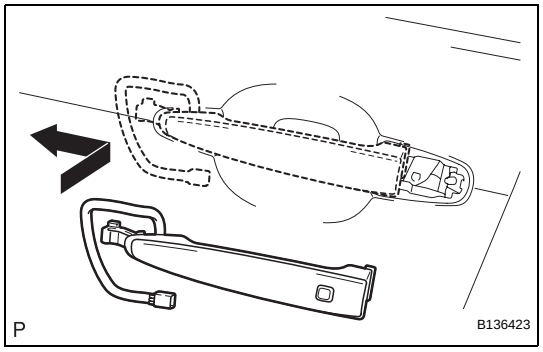


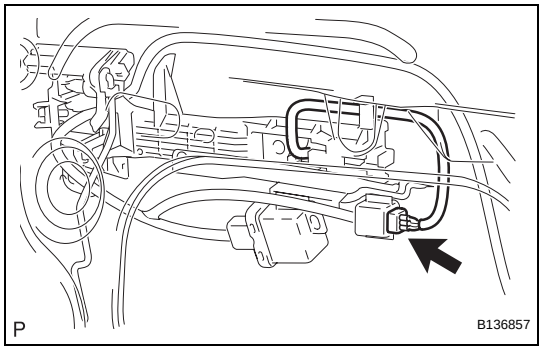


# INSTALLATION

1. **INSTALL FRONT DOOR OUTSIDE HANDLE SUB-ASSEMBLY**
   (a) Insert the front end of the front door outside handle assembly into the front door outside handle frame.
   (b) Insert the rear end of the front door outside handle assembly into the front door outside handle frame. Slide the front door outside handle assembly to the front of the vehicle to install it.
   (c) Connect the connector.
2. **INSTALL FRONT DOOR OUTSIDE HANDLE COVER (See page ED-29)**
3. **INSTALL FRONT DOOR GLASS SUB-ASSEMBLY (See page ED-31)**
4. **INSTALL FRONT DOOR SERVICE HOLE COVER (See page ED-32)**
5. **INSTALL FRONT DOOR TRIM BOARD SUB-ASSEMBLY (See page ED-33)**
6. **INSTALL COURTESY LIGHT ASSEMBLY (See page ED-34)**
7. **INSTALL ASSIST GRIP COVER (See page ED-34)**
8. **INSTALL FRONT DOOR INSIDE HANDLE BEZEL PLUG (See page ED-34)**

9. **INSTALL FRONT DOOR LOWER FRAME BRACKET GARNISH (See page ED-34)**

# LUGGAGE COMPARTMENT DOOR OPENER OUTER SWITCH

## COMPONENTS

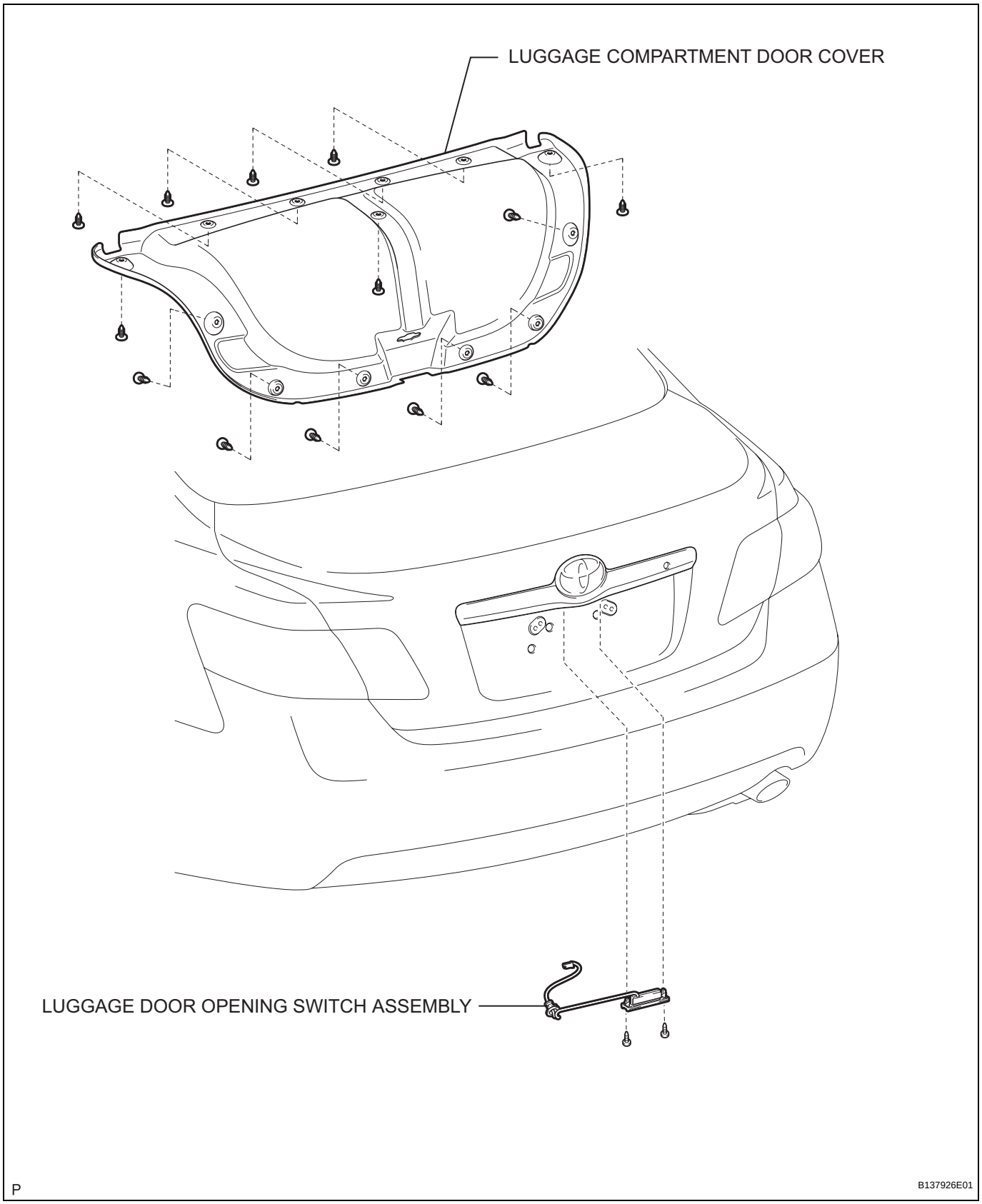

# REMOVAL

1. **REMOVE LUGGAGE COMPARTMENT DOOR COVER (See page ET-61)**

2. **REMOVE LUGGAGE DOOR OPENING SWITCH ASSEMBLY**
   (a) Disconnect the connector.
   (b) Remove the 2 screws and the luggage door opening switch assembly.

# INSPECTION

1. **INSPECT LUGGAGE KEY ELECTRICAL SWITCH**
   (a) Disconnect the switch connector.
   (b) Measure the resistance according to the value(s) in the table below.
   **Standard resistance**

| Tester connection | Condition | Specified condition |
|---|---|---|
| 1 - 2 | Luggage compartment open switch not pushed (OFF) | 10 kΩ or higher |
| | Luggage compartment open switch pushed (ON) | Below 1 Ω |

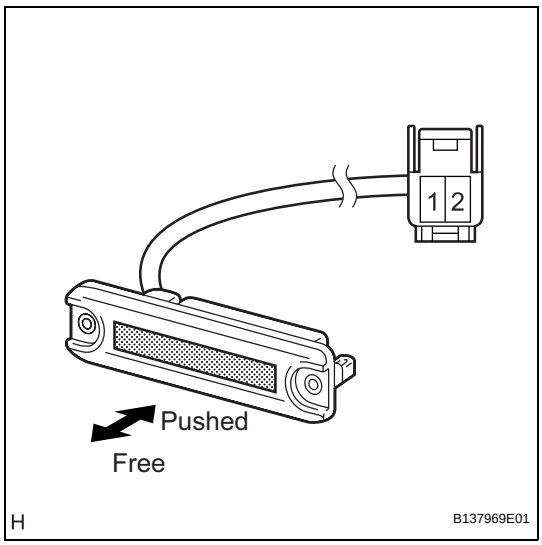

# INSTALLATION

**1. INSTALL LUGGAGE DOOR OPENING SWITCH ASSEMBLY**

(a) Install the luggage door opening switch assembly with the 2 screws.

(b) Connect the connector.

**2. INSTALL LUGGAGE COMPARTMENT DOOR COVER (See page ET-64)**