Foreword

Welcome to the growing group of value–conscious people who drive Scions. We are proud of the advanced engineering and quality construction of each vehicle we build.

This Owner's Manual explains the operation of your new Scion. Please read it thoroughly and have all the occupants follow the instructions carefully. Doing so will help you enjoy many years of safe and trouble−free motoring. For important information about this manual and your Scion, read the following pages carefully.

When it comes to service, remember that your Scion dealer knows your vehicle very well and is interested in your complete satisfaction. Your Scion dealer will provide quality maintenance and any other assistance you may require.

If there is not a Scion dealer near you, or you need emergency assistance for any reason, please call the following number:

U.S. OWNERS

- When traveling in the U.S. mainland:
  Scion Customer Experience **Toll−free:1−866−70−SCION or 1−866−707−2466**
- Hawaii:
  Servco Automotive Customer Services **Toll−free:1−888−272−5515**

Please leave this Owner's Manual in this vehicle at the time of resale. The next owner will need this information also.

All information and specifications in this manual are current at the time of printing. However, because of Scion's policy of continual product improvement, we reserve the right to make changes at any time without notice.

Please note that this manual applies to all models and explains all equipment, including options. Therefore, you may find some explanations for equipment not installed on your vehicle.

Please access our websites for further information.

- The U.S. mainland **www.scion.com**
- Hawaii **www.scionhawaii.com**

TOYOTA MOTOR CORPORATION

© 2006 TOYOTA MOTOR CORPORATION
All rights reserved. This material may not be reproduced or copied, in whole or in part, without the written permission of Toyota Motor Corporation.

Important information about this manual

Safety and vehicle damage warnings

Throughout this manual, you will see safety and vehicle damage warnings. You must follow these warnings carefully to avoid possible injury or damage.

The types of warnings, what they look like, and how they are used in this manual are explained as follows:

⚠ CAUTION

This is a warning against anything which may cause injury to people if the warning is ignored. You are informed about what you must or must not do in order to reduce the risk of injury to yourself and others.

NOTICE

This is a warning against anything which may cause damage to the vehicle or its equipment if the warning is ignored. You are informed about what you must or must not do in order to avoid or reduce the risk of damage to your vehicle and its equipment.

Safety symbol

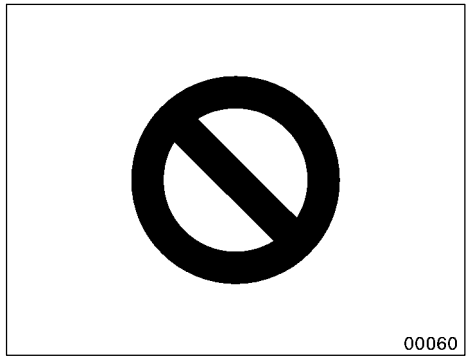

When you see the safety symbol shown above, it means: “Do not...”; “Do not do this”; or “Do not let this happen”.

Important information about your Scion

Occupant restraint systems

Scion encourages you and your family to take the time to read Section 1–3 of this Owner's Manual carefully. In terms of helping you understand how you can receive the maximum benefit of the occupant restraint systems this vehicle provides, Section 1–3 of this Owner's Manual is the most important section for you and your family to read.

Section 1–3 describes the function and operation concerning seats, seat belts, SRS airbags and child restraint systems of this vehicle and some potential hazards you should be aware of. These systems work together along with the overall structure of this vehicle in order to provide occupant restraint in the event of a crash. The effect of each system is enhanced when it is used properly and together with other systems. No single occupant restraint system can, by itself, provide you or your family with the equal level of restraint which these systems can provide when used together. That is why it is important for you and your family to understand the purpose and proper use of each of these systems and how they relate to each other.

The purpose of all occupant restraint systems is to help reduce the possibility of death or serious injury in the event of a collision. None of these systems, either individually or together, can ensure that there is no injury in the event of collision. However, the more you know about these systems and how to use them properly, the greater your chances become of surviving an accident without death or serious injury.

Seat belts provide the primary restraint to all occupants of the vehicle, and every occupant of the vehicle should wear seat belts properly at all times. Children should always be secured in child restraint systems that are appropriate for their age and size. SRS (Supplemental Restraint System) airbags are, as their names imply, designed to work with, and be supplemental to, seat belts and are not substitutes for them. SRS airbags can be very effective in reducing the risk of head and chest injuries by preventing contact of the head and chest with interior portions of the vehicle.

In order to be effective, the SRS airbags must deploy with tremendous speed. The rapid deployment of the SRS airbags makes the SRS airbags themselves potential sources of serious injury if an occupant is too close to an airbag, or if an object or some part of his or her body has been placed between the occupant and the airbag at the time of deployment. This is just one example of how the instructions in Section 1–3 of this Owner's Manual will help ensure proper use of the occupant restraint systems, and increase the safety they can provide to you and your family in the event of an accident.

Scion recommends you to read the provisions in Section 1–3 carefully and refer to them as needed during your time of ownership of this vehicle.

Event data recorder

Your vehicle has computers that monitor and control certain aspects of your vehicle. These computers assist in driving and maintaining optimal vehicle performance. Besides storing data useful for troubleshooting, there is a system to record data in a crash or a near car crash event. This is called an Event Data Recorder (EDR).

The SRS airbag sensor assembly contains the EDR. In a crash or a near car crash event, this device records some or all of the following information:

- Engine speed
- Whether the brake pedal was applied or not
- Vehicle speed
- To what extent the accelerator pedal was depressed
- Position of the transmission selector lever
- Whether the driver and front passenger wore the seat belts or not
- Driver's seat position
- Front passenger's occupant classification

- SRS airbag deployment data
- SRS airbag system diagnostic data

If your vehicle is equipped with a vehicle stability control (VSC) system, its Electronic Control Unit (ECU) may contain another EDR. There are a variety of driving situations which include activating the VSC under which the VSC EDR will record certain information. The VSC EDR may record some or all of the following information:

- Behavior of the vehicle
- Steering wheel angle
- Vehicle speed
- To what extent the accelerator pedal was depressed
- To what extent the brake pedal was applied
- To what extent the ECU controlled the condition of the 4 wheels
- Vehicle stability control system diagnostic data

The information above is intended to be used for the purpose of improving vehicle safety performance. Unlike general data recorders, the EDR does not record sound data such as conversation between passengers.

Scion will not disclose the data recorded in an EDR to a third party except when:

- An agreement from the vehicle's owner (or the leasing company for a leased vehicle) is obtained
- Officially requested by the police or other authorities
- Used as a defence for Scion in a law suit
- Ordered by the court

However, if necessary Scion will:

- Use the data for research on Scion vehicle safety performance
- Disclose the data to a third party for research purposes without disclosing details of the vehicle owner, and only when it is deemed necessary
- Disclose summarized data cleared of vehicle identification information to a non–Scion organization for research purposes

New vehicle warranty

Your new vehicle is covered by the following Scion limited warranties:

- New vehicle warranty
- Emission control systems warranty
- Others

For further information, please refer to the “Owner’s Warranty Information Booklet” or “Owner’s Manual Supplement”.

Your responsibility for maintenance

It is the owner’s responsibility to make sure the specified maintenance is performed. Section 6 gives details of these maintenance requirements. Also included in Section 6 is general maintenance. For scheduled maintenance information, please refer to the “Scheduled Maintenance Guide” or “Owner’s Manual Supplement”.

Important health and safety information about your Scion

⚠ CAUTION

- **WARNING: Engine exhaust, some of its constituents, and a wide variety of automobile components contain or emit chemicals known to the State of California to cause cancer and birth defects and other reproductive harm. In addition, oils, fuels and fluids contained in vehicles as well as waste produced by component wear contain or emit chemicals known to the State of California to cause cancer and birth defects or other reproductive harm.**
- **Battery posts, terminals and related accessories contain lead and lead compounds. Wash your hands after handling. Used engine oil contains chemicals that have caused cancer in laboratory animals. Always protect your skin by washing thoroughly with soap and water.**

Accessories, spare parts and modification of your Scion

A wide variety of non–genuine spare parts and accessories for Scion vehicles are currently available in the market. You should know that Scion does not warrant these products and is not responsible for their performance, repair, or replacement, or for any damage they may cause to, or adverse effect they may have on, your Scion vehicle.

This vehicle should not be modified with non–genuine Scion products. Modification with non–genuine Scion products could affect its performance, safety or durability, and may even violate governmental regulations. In addition, damage or performance problems resulting from the modification may not be covered under warranty.

Installation of a mobile two−way radio system

As the installation of a mobile two–way radio system in your vehicle could affect electronic systems such as multiport fuel injection system/sequential multiport fuel injection system, anti–lock brake system, traction control system, vehicle stability control system, SRS airbag system and seat belt pretensioner system, be sure to check with your Scion dealer for precautionary measures or special instructions regarding installation.

Tires and loading on your Scion

Underinflated or overinflated tire pressure and the excess load may result in the deterioration of steering ability and braking ability, leading to an accident. Check the tire inflation pressure periodically and be sure to keep the load limits given in this Owner's Manual. For details about tire inflation pressure and load limits, see page 209 and pages 145 through 146.

Scrapping of your Scion

The SRS airbag and seat belt pretensioner devices in your Scion contain explosive chemicals. If the vehicle is scrapped with the airbags and pretensioners left as they are, this may cause an accident such as a fire. Be sure to have the systems of the SRS airbag and seat belt pretensioner removed and disposed of by a qualified service shop or by your Scion dealer before you dispose of your vehicle.

Leak detection pump

This pump performs fuel evaporation leakage check. This check is done approximately five hours after the engine is turned off. So you may hear a sound coming from underneath the luggage compartment for several minutes. It does not indicate a malfunction.

SECTION 1–1

OPERATION OF INSTRUMENTS AND CONTROLS

Overview of instruments and controls

Instrument panel overview 2
Instrument cluster overview 4
Indicator symbols on the instrument cluster 5

Instrument panel overview

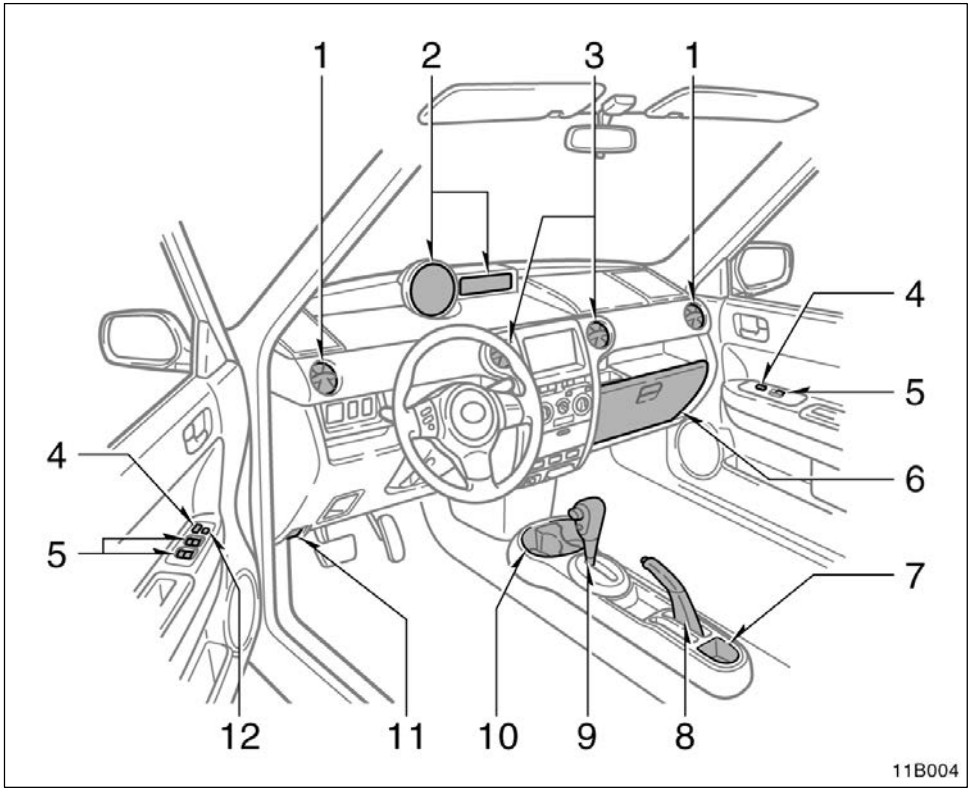

1. Side vent
2. Instrument cluster
3. Center vents
4. Power door lock switch
5. Power window switches
6. Glove box
7. Rear cup holder
8. Parking brake lever
9. Automatic transmission selector lever or manual transmission gear shift lever
10. Front cup holders
11. Hood lock release lever
12. Window lock switch

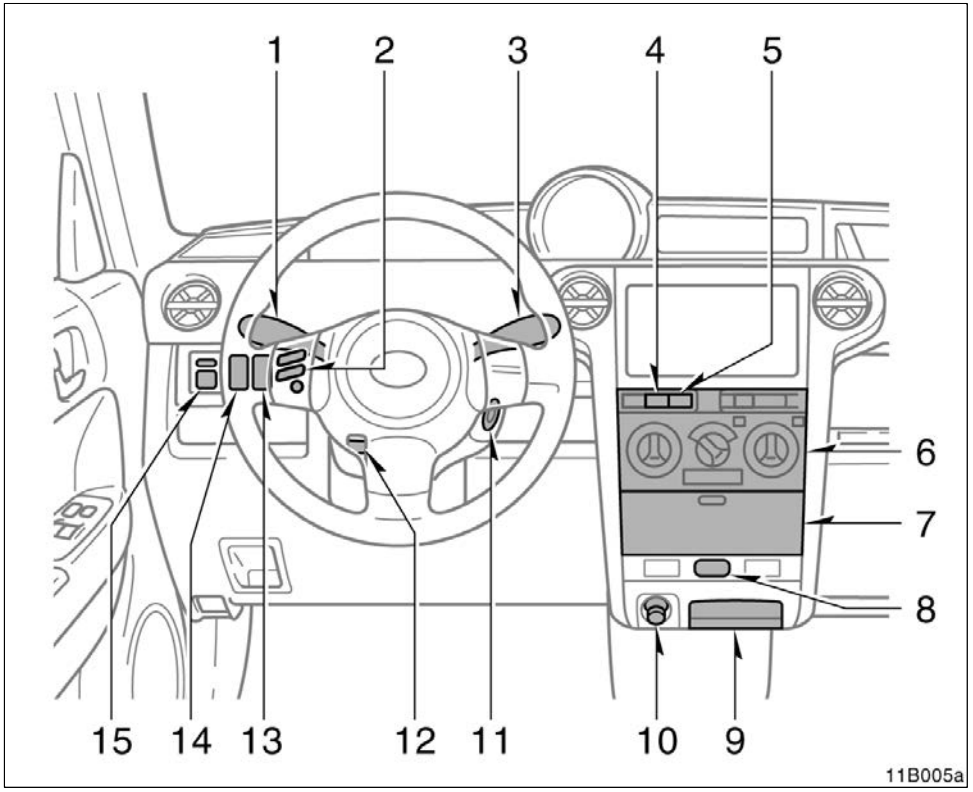

1. Headlight and turn signal switches
2. Audio remote controls (steering switches)
3. Wiper and washer switches
4. Rear window defogger switch
5. Emergency flasher switch
6. Air conditioning controls
7. Auxiliary box
8. “AIRBAG ON” and “AIRBAG OFF” indicator lights/ front passenger’s seat belt reminder light
9. Ashtray
10. Cigarette lighter
11. Ignition switch
12. Tilt steering lock release lever
13. Traction control system off switch
14. Instrument panel light control dial
15. Power rear view mirror control switches

Instrument cluster overview

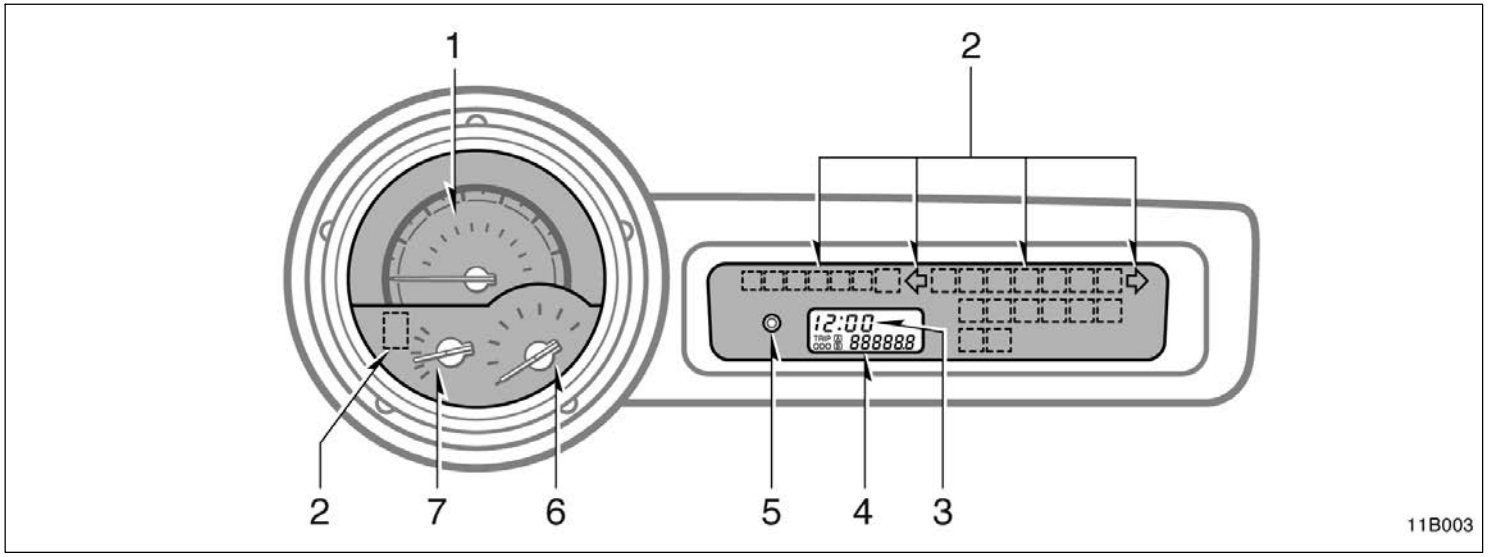

1. Speedometer
2. Service reminder indicators and indicator lights
3. Clock
4. Odometer and two trip meters
5. Clock reset and trip meter reset knob
6. Tachometer
7. Fuel gauge

Indicator symbols on the instrument cluster

BRAKE	Brake system warning light*		Open door warning light*
	Driver's seat belt reminder light*		SRS warning light*
PASSENGER	Front passenger's seat belt reminder light*	VSC	Vehicle stability control system and traction control system warning light*
	Charging system warning light*		Low fuel level warning light*
MAINT REQD	Engine oil replacement reminder light		Turn signal indicator lights
CHECK	Malfunction indicator lamp*		Headlight high beam indicator light
	Low engine oil pressure warning light*	O/D OFF	Overdrive–off indicator light
(blue)	Low engine coolant temperature indicator light*		Slip indicator light
(red)	High engine coolant temperature warning light*	TRAC OFF	Traction control system off indicator light
ABS	Anti-lock brake system warning light*	PASSENGER OFF AIRBAG ON	"AIRBAG ON" and "AIRBAG OFF" indicator lights

*: For details, see "Service reminder indicators and warning buzzers" on page 85.

SECTION 1–2

OPERATION OF INSTRUMENTS AND CONTROLS

Keys and Doors

Keys 8
Side doors 8
Wireless remote control 11
Power windows 15
Back door 17
Hood 18
Fuel tank cap 20

Keys

This key works in every lock.

Since the side doors can be locked without a key, you should always carry a spare key in case you accidentally lock your keys inside the vehicle.

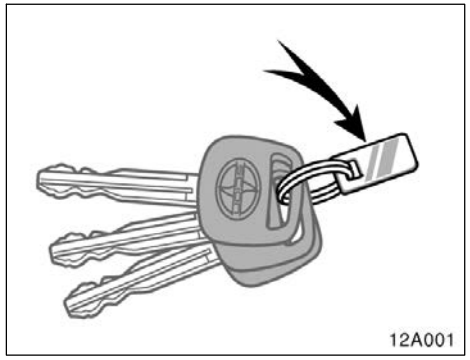

KEY NUMBER PLATE

Your key number is shown on the plate. Keep the plate in a safe place such as your wallet, not in the vehicle.

If you should lose your keys or if you need additional keys, duplicates can be made by a Scion dealer using the key number.

We recommend writing down the key number and storing it in a safe place.

Side doors

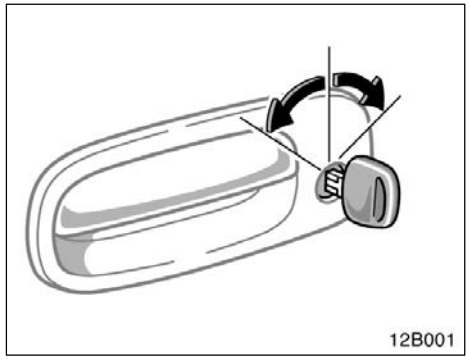

LOCKING AND UNLOCKING WITH KEY

Insert the key into the keyhole and turn it.

To lock: Turn the key forward.
To unlock: Turn the key backward.

All the side doors and back door lock and unlock simultaneously with either front door. In the driver's door lock, turning the key once will unlock the driver's door and twice in succession will unlock all the side doors and back door simultaneously.

When all the side doors and back door are unlocked simultaneously using a key, the interior light will come on and remain on for about 15 seconds before fading out. (For further information, see “Interior light” on page 78.)

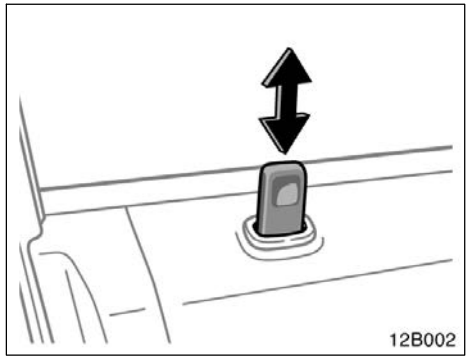

LOCKING AND UNLOCKING WITH INSIDE LOCK BUTTON

Move the lock button.

To lock: Push the button downward.
To unlock: Pull the button upward.

Closing the door with the lock button in the lock position will also lock the door. Be careful not to lock your keys in the vehicle.

Doors cannot be locked when either front door is open and the key is in the ignition.

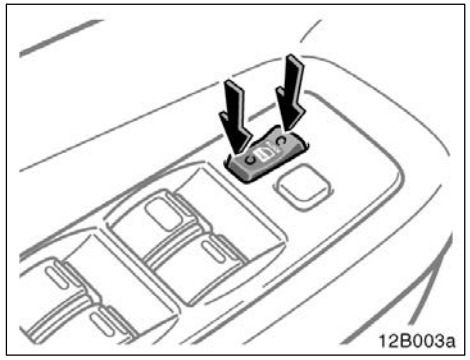

Driver’s side

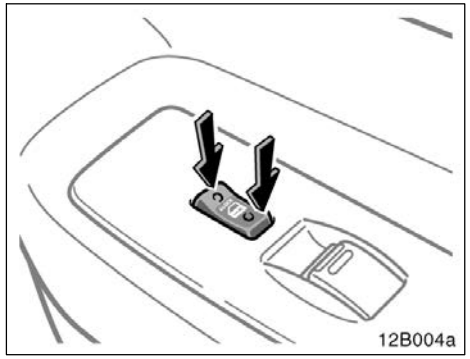

Front passenger’s side

LOCKING AND UNLOCKING WITH POWER DOOR LOCK SWITCH

Push the switch.

To lock: Push the switch down on the front side.
To unlock: Push the switch down on the rear side.

Operating the switch locks or unlocks all the side doors and back door simultaneously.

If you do any of the following, no door can be unlocked with the power door lock switch.

- Lock all the side doors and back door with the key or wireless remote control when all the side doors and back door are closed.
- Set the driver's door inside lock button in the lock position, and close the driver's door.

The power door lock switch can be reset in the following ways.

- Turn the ignition key to "ON" position.
- Unlock all the side doors and back door with the key or wireless remote control.
- Unlock the driver's door with the inside lock button, and then unlock all the side doors and back door with the power door lock switch.

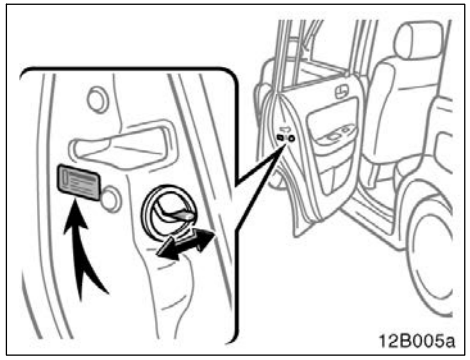

REAR DOOR CHILD–PROTECTORS

Move the lock lever to the "LOCK" position as shown on the label.

When the child–protector is locked, you cannot open the rear door by the inside door handle. We recommend using this feature whenever small children are in the vehicle.

⚠ CAUTION

Before driving, be sure that the doors are closed and locked, especially when small children are in the vehicle. Along with the proper use of seat belts, locking the doors helps prevent the driver and passengers from being thrown out from the vehicle during an accident. It also helps prevent the doors from being opened unintentionally.

Wireless remote control—

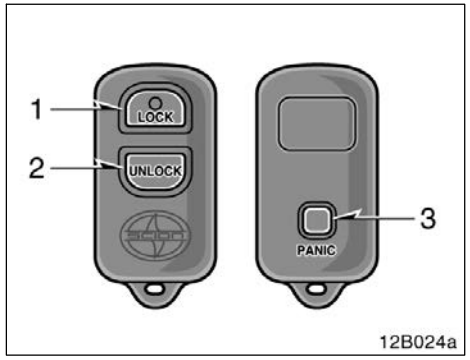

1. **"LOCK" switch**
2. **"UNLOCK" switch**
3. **"PANIC" switch**

The wireless remote control system is designed to lock or unlock all the side doors and back door, or activate the "PANIC" mode from a distance within approximately 1 m (3 ft.) of the vehicle.

When you operate any switch, push it slowly and securely.

The wireless remote control transmitter is an electronic component. Observe the following instructions in order not to cause damage to the transmitter.

- Do not leave the transmitter in places where the temperature becomes high such as on the dashboard.
- Do not disassemble it.
- Avoid knocking it hard against other objects or dropping it.
- Avoid putting it in water.

You can use up to 4 wireless remote control transmitters for the same vehicle. Contact your Scion dealer for detailed information.

If the wireless remote control transmitter does not actuate the side doors and back door or alarm, or operate from a normal distance:

- Check for closeness to a radio transmitter such as a radio station or an airport which can interfere with normal operation of the transmitter.
- The battery may have been consumed. Check the battery in the transmitter. To replace the battery, see "—Replacing battery" on page 14.

—Locking and unlocking doors

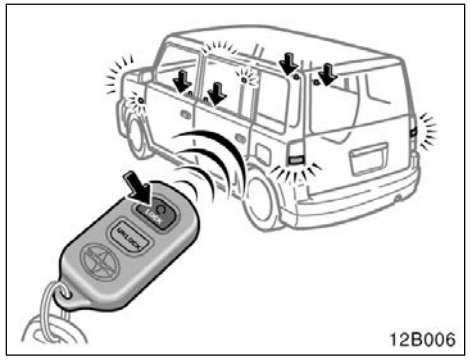

Locking operation

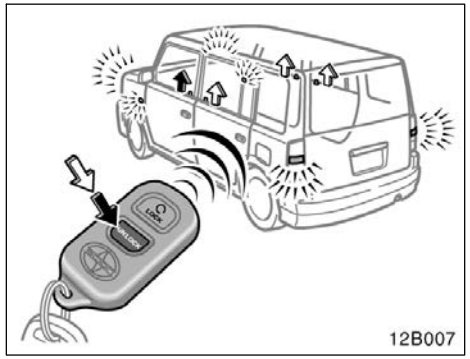

Unlocking operation

To lock and unlock all the side doors and back door, push the switches of the transmitter slowly and securely.

To lock: Push the “LOCK” switch. All the side doors and back door are locked simultaneously. At this time, turn signal lights will flash.

Check to see that all the side doors and back door are securely locked.

If any of side doors or back door is not securely closed, or if the key is in the ignition switch, locking cannot be performed by the “LOCK” switch.

To unlock: Push the “UNLOCK” switch once to unlock the driver’s door alone. Pushing the switch twice within 3 seconds unlocks all the side doors and back door simultaneously. At this time, turn signal lights will flash twice.

When the “UNLOCK” switch is pressed, the interior light will come on and remain on for about 15 seconds before fading out. (For further information, see “Interior light” on page 78.)

You have 30 seconds to open a door after using the wireless remote unlock feature. If a door is not opened by then, all the side doors and back door will be automatically locked again.

If the “LOCK” or “UNLOCK” switch is kept pressed in, the locking or unlocking operation is not repeated. Release the switch and then push again.

“PANIC” SWITCH

Pushing the “PANIC” switch blows the horn intermittently and flashes the headlights and turn signal lights.

The “PANIC” switch is used to deter vehicle theft when you witness anyone attempting to break into or damage your vehicle.

The alarm will last for 1 minute. To stop alarm midway, do the following:

- Push any of the switch on the wireless remote control transmitter.
- Unlock any of doors with the key.
- Turn the ignition key from the “LOCK” to “ON” position.

The “PANIC” mode does not work when the ignition switch is in the “ON” position.

This device complies with Part 15 of the FCC Rules. Operation is subject to the following two conditions: (1) This device may not cause harmful interference, and (2) this device must accept any interference received, including interference that may cause undesired operation.

NOTICE:

This equipment has been tested and found to comply with the limits for a Class B digital device, pursuant to Part 15 of the FCC Rules. These limits are designed to provide reasonable protection against harmful interference in a residential installation. This equipment generates, uses and can radiate radio frequency energy and, if not installed and used in accordance with the instructions, may cause harmful interference to radio communications. However, there is no guarantee that interference will not occur in a particular installation. If this equipment does cause harmful interference to radio or television reception, which can be determined by turning the equipment off and on, the user is encouraged to try to correct the interference by one or more of the following measures:

- Reorient or relocate the receiving antenna.
- Increase the separation between the equipment and receiver.
- Connect the equipment into an outlet on a circuit different from that to which the receiver is connected.
- Consult the dealer or an experienced radio / TV technician for help.

FCC WARNING:

Changes or modifications not expressly approved by the party responsible for compliance could void the user’s authority to operate the equipment.

—Replacing battery

For replacement, use a CR2016 lithium battery or equivalent.

⚠ CAUTION

Special care should be taken to prevent small children from swallowing the removed transmitter battery or components.

NOTICE

- ***When replacing the transmitter battery, be careful not to lose the components.***
- ***Replace only with the same or equivalent type recommended by a Scion dealer.***
- ***Dispose of used battery according to the local laws.***

Replace the transmitter battery by following these procedures:

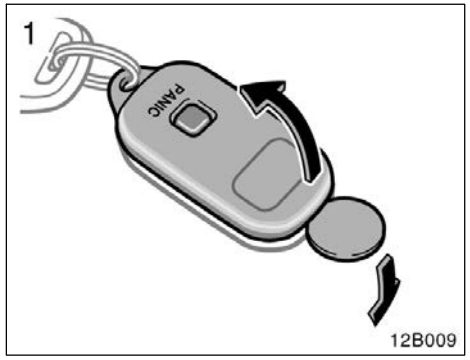

1. Using a coin or equivalent, open the transmitter case.

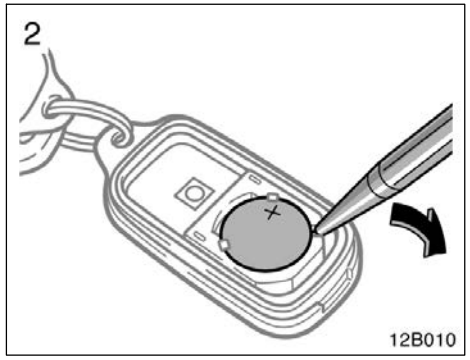

2. Remove the discharged battery by ballpoint pen. Insert the tip of ballpoint pen at the guide groove and lift as shown in the above illustration.

NOTICE

Do not bend the terminals.

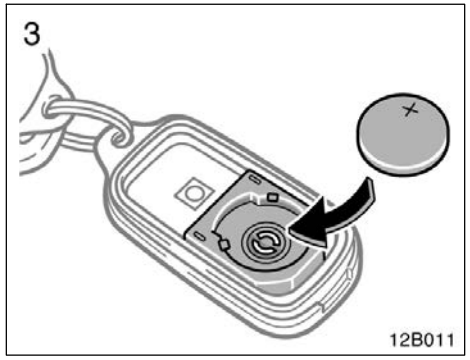

3. Put in a new battery with positive (+) side up.

Close the case securely.

NOTICE

- ***Make sure the positive side and negative side of the battery are faced correctly.***
- ***Do not replace the battery with wet hands. Water may cause unexpected rust.***
- ***Do not touch or move any components inside the battery, or it may interfere with proper operation.***
- ***Be careful not to bend the electrode when inserting the battery and that dust or oils do not adhere to the transmitter case.***
- ***Close the battery case securely.***

After replacing the battery, check that the transmitter operates properly. If the transmitter still does not operate properly, contact your Scion dealer.

If you lose your transmitter, contact your Scion dealer as soon as possible to avoid the possibility of theft, or an accident. (See “If you lose your wireless remote control transmitter” on page 181.)

Power windows

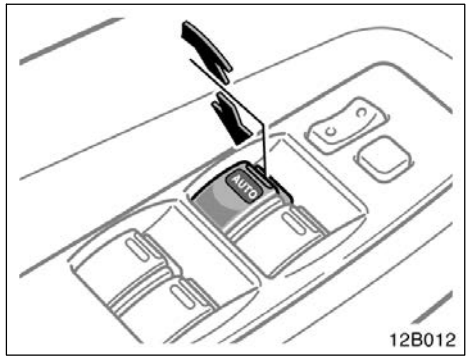

The windows can be operated with the switch on each side door.

The power windows work when the ignition switch is in the “ON” position.

OPERATING THE DRIVER’S WINDOW

Use the switch on the driver’s door.

Normal operation: The window moves as long as you hold the switch.

To open: Lightly push down the switch.
To close: Pull up the switch.

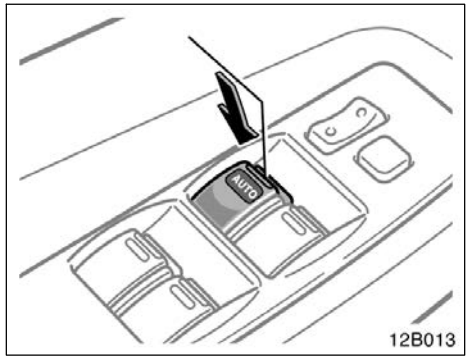

Automatic operation (to open only): Push the switch completely down and then release it. The window will fully open. To stop the window partway, lightly pull the switch up and then release it.

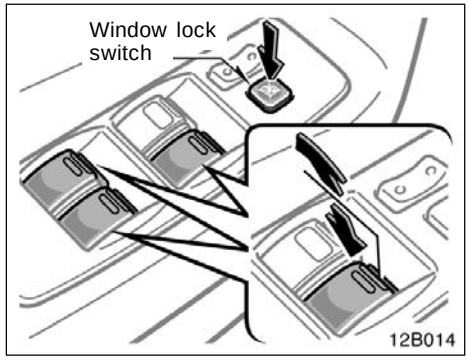

OPERATING THE PASSENGERS' WINDOWS

Use the switch on each passenger's door or the driver's door that controls each passenger's window.

The window moves as long as you hold the switch.

To open: Push down the switch.
To close: Pull up the switch.

If you push in the window lock switch on the driver's door, the passengers' windows cannot be operated.

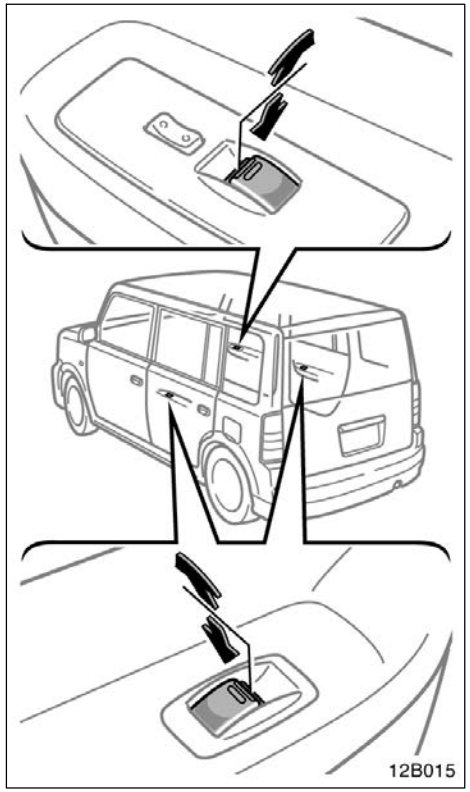

⚠ CAUTION

To avoid serious personal injury, you must do the following.

- **Before you close the power windows, always make sure there is nobody around the power windows. You must also make sure the heads, hands and other parts of the bodies of all occupants are kept completely inside the vehicle. If someone's neck, head or hands get caught in a closing window, it could result in death or serious injury. When anyone closes the power windows, make sure he or she operates the windows safely.**
- **When small children are in the vehicle, never let them use the power window switches without supervision. Use the window lock switch to prevent them from making unexpected use of the switches.**

- **Be sure to remove the ignition key when you leave your vehicle.**
- **Never leave anyone (particularly a small child) alone in your vehicle, especially with the ignition key still inserted. Otherwise, he or she could use the power window switches and get trapped in a window opening. Unattended person (particularly a small child) can be involved in a serious accident.**

Back door

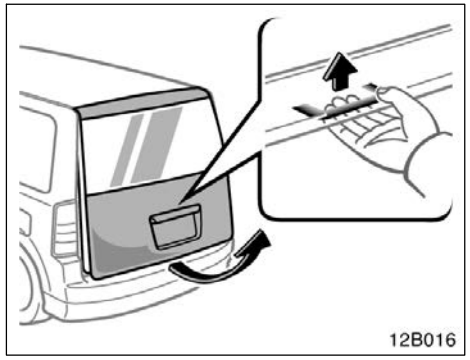

To open the back door, push the back door opener and raise the back door.

The back door is locked and unlocked simultaneously with all the side doors (see "—Locking and unlocking doors" on page 12 and "Side doors" on page 8).

If the battery is disconnected or run down, the back door will be automatically locked after you reconnect, replace or recharge the battery.

If the back door opener does not operate, see "If you cannot operate back door opener" on page 181.

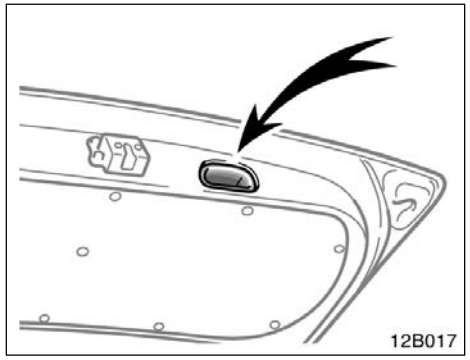

When closing the back door, the inside handle can be used to make the reach easier.

To close the back door, lower it and press down on it. After closing the back door, try pulling it up to make sure it is securely closed.

See “Cargo and luggage” on page 146 for precautions to observe when loading luggage.

⚠ CAUTION

Keep the back door closed while driving. This not only keeps the luggage from being thrown out but also prevents exhaust gases from entering the vehicle.

Hood

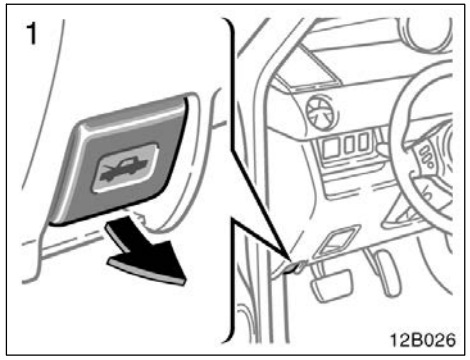

To open the hood:

1. **Pull the hood lock release lever. The hood will spring up slightly.**

⚠ CAUTION

Before driving, be sure that the hood is closed and securely locked. Otherwise, the hood may open unexpectedly while driving and an accident may occur.

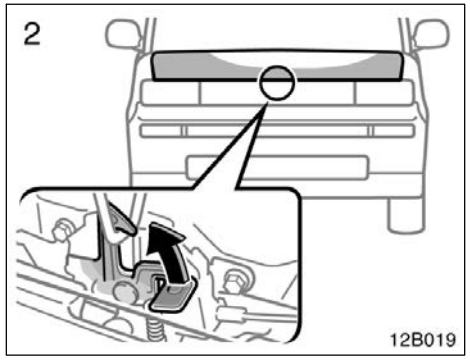

2. In front of the vehicle, pull up the auxiliary catch lever and lift the hood.

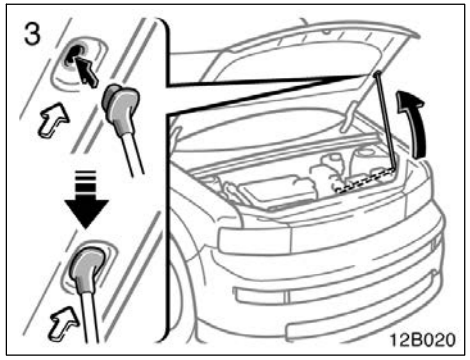

3. Hold the hood open by inserting the support rod into the slot.

To insert the support rod into the slot, move it straight up. If it is moved to the side or toward the inside of the vehicle, it may become detached.

Before closing the hood, check to see that you have not forgotten any tools, rags, etc. and return the support rod to its clip– this prevents rattles. Then lower the hood and make sure it locks into place. If necessary, press down gently on the front edge to lock it.

⚠ CAUTION

After inserting the support rod into the slot, make sure the rod supports the hood securely from falling down on to your head or body.

NOTICE

Be sure to return the support rod to its clip before closing the hood. Closing the hood with the support rod up could cause the hood to bend.

Fuel tank cap

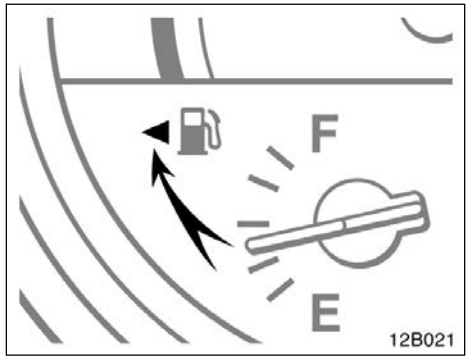

This indicates that the fuel filler door is on the left side of your vehicle.

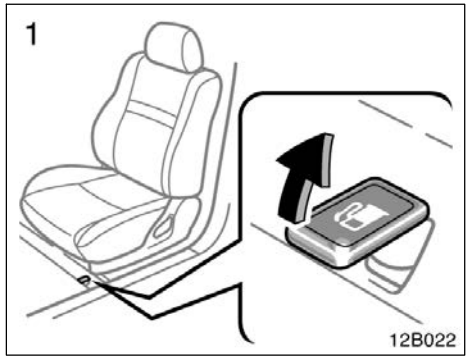

1. To open the fuel filler door, pull the lever up.

When refueling, turn off the engine.

⚠ CAUTION

- **Do not smoke, cause sparks or allow open flames when refueling. The fumes are flammable.**
- **When opening the cap, do not remove the cap quickly. In hot weather, fuel under pressure could cause injury by spraying out of the filler neck if the cap is suddenly removed.**

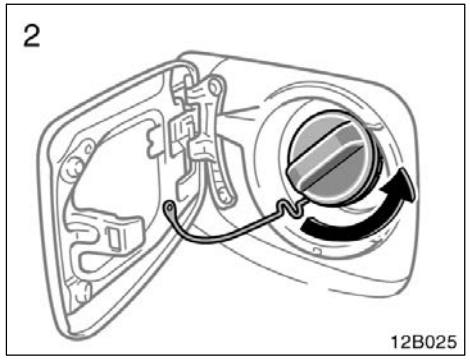

2. To remove the fuel tank cap, turn the cap slowly counterclockwise, then pause slightly before removing it.

It is not unusual to hear a slight swoosh when the cap is opened. After refueling, turn the cap clockwise till you hear a click. Once you hear the click, release the fuel tank cap. The cap will revolve slightly in the opposite direction.

If the cap is not tightened securely, the malfunction indicator lamp comes on. Make sure the cap is tightened securely.

The indicator lamp goes off after driving several times. If the indicator lamp does not go off, contact your Scion dealer as soon as possible.

⚠ CAUTION

- **Make sure the cap is tightened securely to prevent fuel spillage in the event of an accident.**
- **Use only a genuine fuel tank cap for replacement. It is designed to regulate fuel tank pressure.**

SECTION 1–3

OPERATION OF INSTRUMENTS AND CONTROLS

Occupant restraint systems

Seats 24
Front seats 24
Fold–down rear seat 27
Head restraints 29
Seat belts 29
SRS airbags 40
Child restraint 52

Seats

While the vehicle is being driven, all vehicle occupants should have the seatback upright, sit well back in the seat and properly wear the seat belts provided.

⚠ CAUTION

- **Do not drive the vehicle unless the occupants are properly seated. Do not allow any passengers to sit on top of a folded–down seatback, or in the luggage compartment or cargo area. Persons not properly seated and/or not properly restrained by seat belts can be severely injured in the event of emergency braking or a collision.**
- **During driving, do not allow any passengers to stand up or move around between seats. Otherwise, severe injuries can occur in the event of emergency braking or a collision.**

Front seats—
—Front seat precautions

Driver seat

⚠ CAUTION

The SRS driver airbag deploys with considerable force, and can cause death or serious injury especially if the driver is very close to the airbag. The National Highway Traffic Safety Administration ("NHTSA") advises:

Since the risk zone for driver airbag is the first 50 – 75 mm (2 – 3 in.) of inflation, placing yourself 250 mm (10 in.) from your driver airbag provides you with a clear margin of safety. This distance is measured from the center of the steering wheel to your breastbone. If you sit less than 250 mm (10 in.) away now, you can change your driving position in several ways:

- **Move your seat to the rear as far as you can while still reaching the pedals comfortably.**
- **Slightly recline the back of the seat. Although vehicle designs vary, many drivers can achieve the 250 mm (10 in.) distance, even with the driver seat all the way forward, simply by reclining the back of the seat somewhat. If reclining the back of your seat makes it hard to see the road, raise yourself by using a firm, non–slippery cushion, or raise the seat if your vehicle has that feature.**
- **If your steering wheel is adjustable, tilt it downward. This points the airbag toward your chest instead of your head and neck.**

The seat should be adjusted as recommended by NHTSA above, while still maintaining control of the foot pedals, steering wheel, and your view of the instrument panel controls.

Front passenger seat

⚠ CAUTION

The SRS front passenger airbag also deploys with considerable force, and can cause death or serious injury especially if the front passenger is very close to the airbag. The front passenger seat should be as far from the airbag as possible with the seatback adjusted, so the front passenger sits upright.

—Seat adjustment precautions

⚠ CAUTION

- **Do not adjust the seat while the vehicle is moving as the seat may unexpectedly move and cause the driver to lose control of the vehicle.**
- **Be careful that the seat does not hit a passenger, luggage or rear seat.**
- **After adjusting the seat position, release the lever and try sliding the seat forward and backward to make sure it is locked in position.**
- **After adjusting the seatback, push your body back against the seat to make sure the seat is locked in position.**
- **Do not put objects under the seats. Otherwise, the objects may interfere with the seat−lock mechanism or unexpectedly push up the seat position adjusting lever and the seat may suddenly move, causing the driver to lose control of the vehicle.**

- **While adjusting the seat, do not put your hands under the seat or near the moving parts. Otherwise, your hands or fingers may be caught and injured.**

—Adjusting front seats

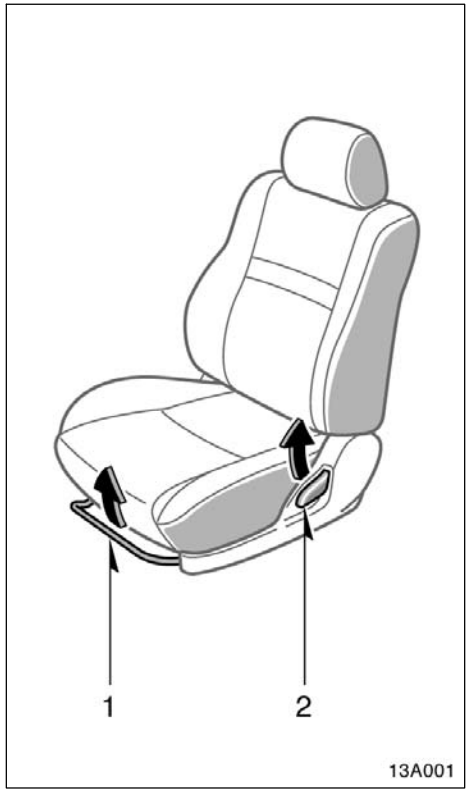

1. SEAT POSITION ADJUSTING LEVER

Hold the center of the lever and pull it up. Then slide the seat to the desired position with slight body pressure and release the lever.

2. SEATBACK ANGLE ADJUSTING LEVER

Lean forward and pull the lever up. Then lean back to the desired angle and release the lever.

⚠ CAUTION

Avoid reclining the seatback any more than needed. The seat belts provide maximum protection in a frontal or rear collision when the driver and the front passenger are sitting up straight and well back in the seats. If you are reclined, the lap belt may slide past your hips and apply restraint forces directly to the abdomen or your neck may contact the shoulder belt. In the event of a frontal collision, the more the seat is reclined, the greater the risk of death or personal injury.

—Flattening seatbacks

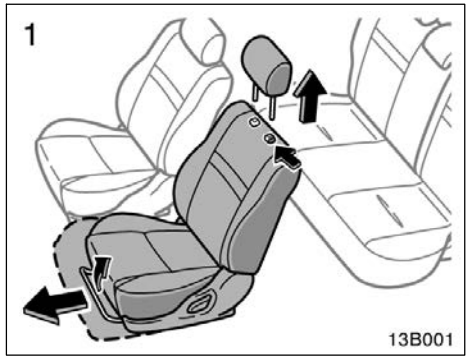

1. Remove the head restraint. Slide the front seat to the front−most locked position to lock the seat.

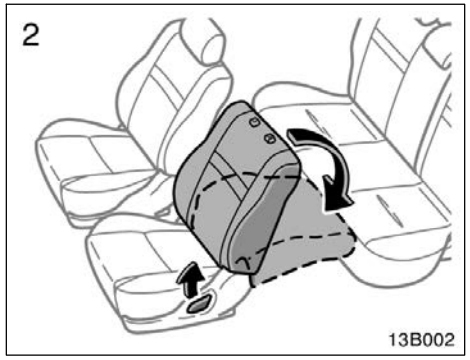

2. **Pull the seatback angle adjusting lever to unlock and push down the seatback.**

When returning the seatback upright, be careful not to get hit by the seatback which will re−bound with considerable spring force.

After returning the seat to its original position, be certain to replace the head restraint.

⚠ CAUTION

- **Do not allow passengers to ride on the flattened seat while driving; use the seat in the normal position.**
- **After putting back the seat, try pushing the seat and seatback forward and rearward to make sure it is secured in place. Be certain to replace head restraint.**

Fold−down rear seat

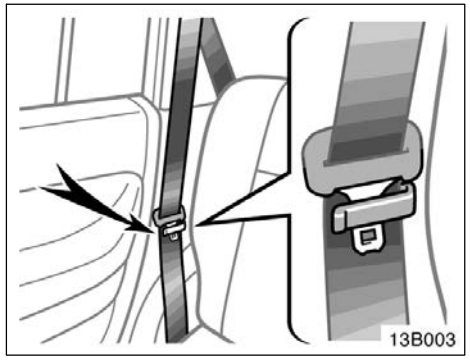

BEFORE FOLDING DOWN REAR SEAT

Make sure the shoulder belt passes through the hanger when folding the rear seat.

This prevents the shoulder belt from being damaged.

⚠ CAUTION

The seat belt must be removed from the hanger when the seat belt is in use.

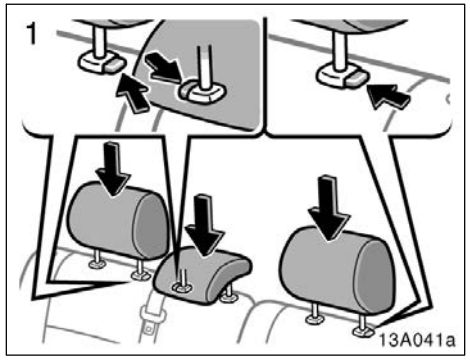

FOLDING REAR SEAT

1. **Lower the head restraint to the lowest position.**

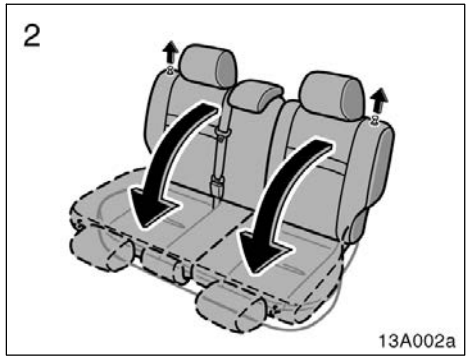

2. **Pull up the lock release button and fold the seatback down.**

Each seatback may be folded separately.

This will enlarge the luggage compartment as far as the seatbacks. See “Cargo and luggage” on page 146 for precautions to observe for loading luggage.

⚠ CAUTION

When returning the seatback to the upright position, observe the following precautions in order to prevent personal injury in a collision or sudden stop:

- **Make sure the seatback is securely locked by pushing forward and rearward on the top of the seatback. Failure to do so will prevent the seat belt from operating properly.**
- **Make sure the seat belts are not twisted or caught in the seatback and are arranged in the proper position and are ready to use.**

Head restraints

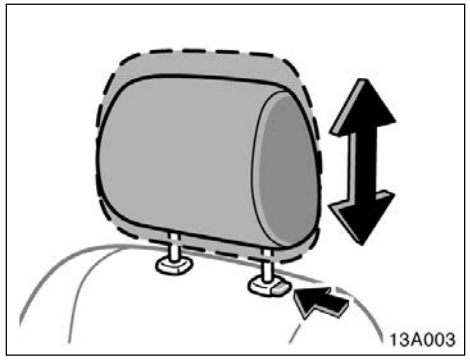

Front seat

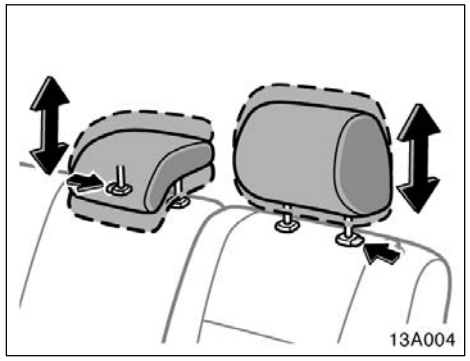

Rear seat

For your safety and comfort, adjust the head restraint before driving.

To raise: Pull it up.
To lower: Push it down while pressing the lock release button.

Rear center head restraint—When an occupant sits on the rear center seat, always pull up the rear center head restraint to the lock position.

The head restraint is most effective when it is close to your head. Therefore, using a cushion on the seatback is not recommended.

⚠ CAUTION

- **Adjust the center of the head restraint so that it is closest to the top of your ears.**
- **After adjusting the head restraint, make sure it is locked in position.**
- **Do not drive with the head restraints removed.**

Seat belts—
—Seat belt precautions

Scion strongly urges that the driver and passengers in the vehicle be properly restrained at all times with the seat belts provided. Failure to do so could increase the chance of injury and/or the severity of injury in accidents.

The seat belts provided for your vehicle are designed for people of adult size, large enough to properly wear them.

Child. Use a child restraint system appropriate for the child until the child becomes large enough to properly wear the vehicle's seat belts. See "Child restraint" on page 52 for details.

If a child is too large for a child restraint system, the child should sit in the rear seat and must be restrained using the vehicle's seat belt. According to accident statistics, the child is safer when properly restrained in the rear seat than in the front seat.

If a child must sit in the front seat, the seat belts should be worn properly. If an accident occurs and the seat belts are not worn properly, the force of the rapid inflation of the airbag may cause death or serious injury to the child.

Do not allow any children to stand up or kneel on either rear or front seats. An unrestrained child could suffer serious injury or death during emergency braking or a collision. Also, do not let the child sit on your lap. Holding a child in your arms does not provide sufficient restraint.

Pregnant woman. Scion recommends the use of a seat belt. Ask your doctor for specific recommendations. The lap belt should be worn securely and as low as possible over the hips and not on the waist.

Injured person. Scion recommends the use of a seat belt. Depending on the injury, first check with your doctor for specific recommendations.

CAUTION

Persons should ride in their seats properly wearing their seat belts whenever the vehicle is moving. Otherwise, they are much more likely to suffer serious bodily injury or death in the event of sudden braking or a collision.

When using the seat belts, observe the following:

- **Use the belt for only one person at a time. Do not use a single belt for two or more people—even children.**
- **Avoid reclining the seatback any more than needed. The seat belts provide maximum protection in a frontal or rear collision when the driver and the front passenger are sitting up straight and well back in the seats. If you are reclined, the lap belt may slide past your hips and apply restraint forces directly to the abdomen or your neck may contact the shoulder belt. In the event of a frontal collision, the more the seat is reclined, the greater the risk of death or personal injury.**
- **Be careful not to damage the belt webbing or hardware. Take care that they do not get caught or pinched in the seat or doors.**
- **Inspect the belt system periodically. Check for cuts, fraying, and loose parts. Damaged parts should be replaced. Do not disassemble or modify the system.**
- **Keep the belts clean and dry. If they need cleaning, use a mild soap solution or lukewarm water. Never use bleach, dye, or abrasive cleaners, or allow them to come into contact with the belts—they may severely weaken the belts. (See “Cleaning the interior” on page 187.)**
- **Replace the belt assembly (including bolts) if it has been used in a severe impact. The entire assembly should be replaced even if damage is not obvious.**

—Fastening front and rear seat belts

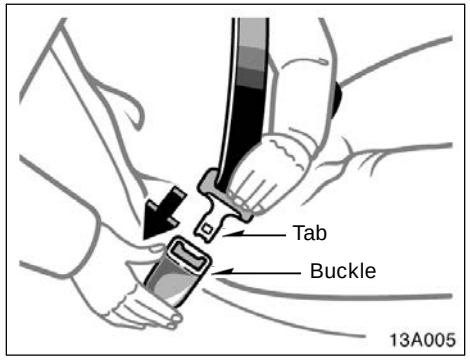

Adjust the seat as needed and sit up straight and well back in the seat. To fasten your belt, pull it out of the retractor and insert the tab into the buckle.

You will hear a click when the tab locks into the buckle.

The seat belt length automatically adjusts to your size and the seat position.

The retractor will lock the belt during a sudden stop or on impact. It also may lock if you lean forward too quickly. A slow, easy motion will allow the belt to extend, and you can move around freely.

When a passenger's shoulder belt is completely extended and is then retracted even slightly, the belt is locked in that position and cannot be extended. This feature is used to hold the child restraint system securely. (For details, see "Child restraint" on page 52.) To free the belt again, fully retract the belt and then pull the belt out once more.

If the seat belt cannot be pulled out of the retractor, firmly pull the belt and release it. You will then be able to smoothly pull the belt out of the retractor.

⚠ CAUTION

- **After inserting the tab, make sure the tab and buckle are locked and that the belt is not twisted.**
- **Do not insert coins, clips, etc. in the buckle as this may prevent you from properly latching the tab and buckle.**
- **If the seat belt does not function normally, immediately contact your Scion dealer. Do not use the seat until the seat belt is fixed, because it cannot protect an adult occupant or your child from death or serious injury.**

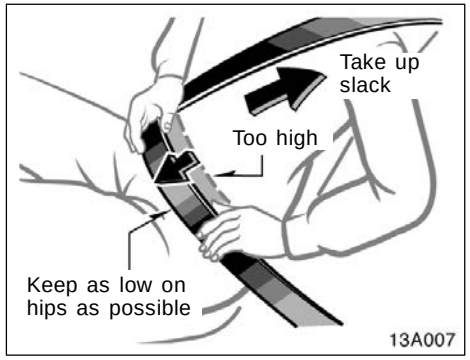

Adjust the position of the lap and shoulder belts.

Position the lap belt as low as possible on your hips—not on your waist, then adjust it to a snug fit by pulling the shoulder portion upward through the latch plate.

⚠ CAUTION

- **Both high–positioned lap belts and loose–fitting belts could cause death or serious injuries due to sliding under the lap belt during a collision or other unintended event. Keep the lap belt positioned as low on hips as possible.**
- **Do not place the shoulder belt under your arm.**

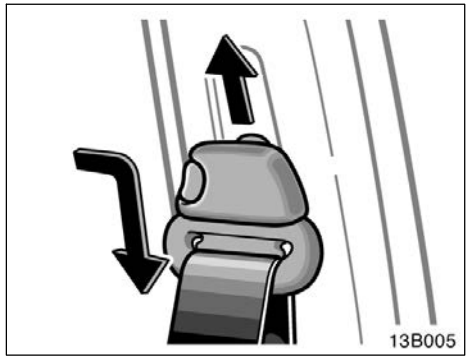

Seat belts with an adjustable shoulder anchor—

Adjust the shoulder anchor position to your size.

To raise: Slide the anchor up.
To lower: Push in the lock release button and slide the anchor down.

After adjustment make sure the anchor is locked in position.

⚠ CAUTION

Always make sure the shoulder belt is positioned across the center of your shoulder. The belt should be kept away from your neck, but not falling off your shoulder. Failure to do so could reduce the amount of protection in an accident and cause death or serious injuries in a collision.

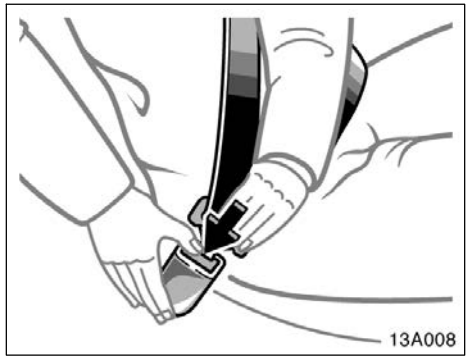

To release the belt, press the buckle release button and allow the belt to retract.

If the belt does not retract smoothly, pull it out and check for kinks or twists. Then make sure it remains untwisted as it retracts.

⚠ CAUTION

Do not separate the buckle with the light gray buckle release button. Otherwise, the seat belt may not work properly. See the information in the following columns.

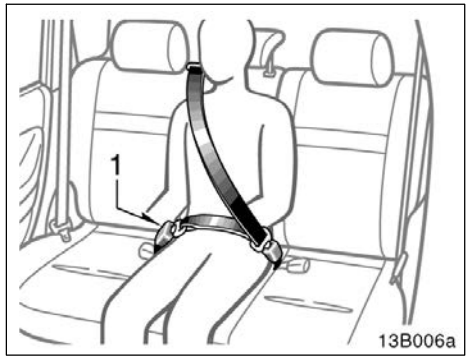

REAR CENTER SEAT BELT

The rear center seat belt is a 3–point type restraint with two buckles. Both seat belt buckles must be correctly located and securely latched for proper operation.

Make sure buckle 1 is securely latched for ready use of the center seat belt.

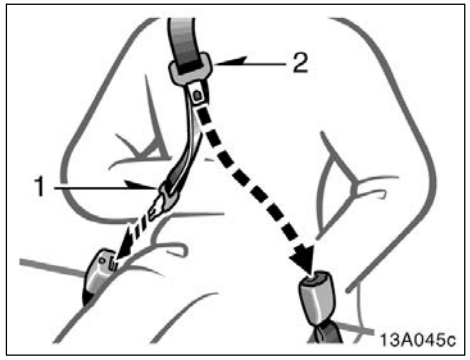

Two buckles and tabs for rear center seat belt.

The two buckles for the rear center seat belt are distinguished with colors of the buckle release button. Also the two tabs have different shapes to prevent the belt from being buckle in the wrong place.

Tab 1—Matches the light gray buckle release button

Tab 2—Matches the red buckle release button

⚠ CAUTION

Make sure that both buckles are correctly located and securely latched. Failure to properly match the buckle and tab may cause severe injury in case of an accident or a collision.

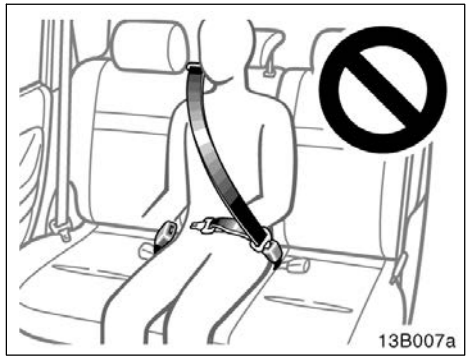

⚠ CAUTION

Do not use the rear center seat belt with either buckle released. Fastening only the shoulder belt or lap belt may cause severe personal injury in case of sudden braking or a collision.

—Seat belt extender

If your seat belts cannot be fastened securely because they are not long enough, a personalized seat belt extender is available from your Scion dealer free of charge.

Please contact your local Scion dealer to order the proper required length for the extender. Bring the heaviest coat you expect to wear for proper measurement and selection of length. Additional ordering information is available at your Scion dealer.

⚠ CAUTION

When using the seat belt extender, observe the following precautions. Failure to follow these instructions could reduce the effectiveness of the seat belt restraint system in case of an accident, increasing the chance of personal injury.

- **Remember that the extender provided for you may not be safe when used on a different vehicle, for another person, or at a different seating position than the one originally intended.**

- **If the seat belt extender has been connected to the driver's seat belt buckle without wearing the seat belt when using the extender in the driver's seat, the SRS driver's airbag system will judge that the driver wears the seat belt even if not wearing it. In this case, the driver's airbag may not activate correctly, causing death or serious injury in the event of a collision. Be sure to wear the seat belt with the seat belt extender. Otherwise, there will also not be any effective protection in a sudden stop or a collision provided by the seat belt.**

- **Make sure the "AIRBAG ON" indicator light is illuminated when using the seat belt extender for the front passenger seat. If the "AIRBAG OFF" indicator light is illuminated, disconnect the extender tongue from the seat belt buckle, then reconnect the seat belt. Reconnect the seat belt extender after making sure the "AIRBAG ON" indicator light is illuminated. If you use the seat belt extender while the "AIRBAG OFF" indicator light is illuminated, the front passenger airbag may not activate correctly, causing death or serious injury in the event of collision.**

- **Be sure to wear the seat belt without the seat belt extender if you can fasten the seat belt without the extender.**
- **Do not use the seat belt extender when installing a child restraint system on the front or rear passenger seat. If installing a child restraint system with the seat belt extender connected to the seat belt, the seat belt will not securely hold the child restraint system, which could cause death or serious injury to the child or other passengers in the event of collision.**

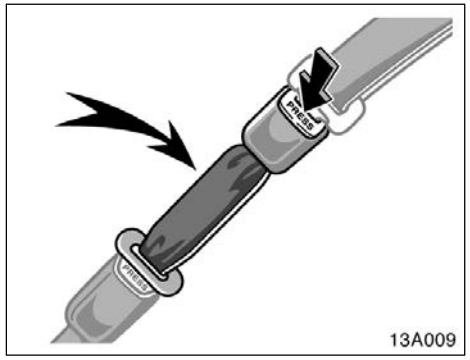

To connect the extender to the seat belt, insert the tab into the seat belt buckle so that the "PRESS" signs on the buckle release buttons of the extender and the seat belt are both facing outward as shown.

You will hear a click when the tab locks into the buckle.

When releasing the seat belt, press on the buckle release button on the extender, not on the seat belt. This helps prevent damage to the vehicle interior and extender itself.

As far as the seat belt extender on the front passenger side is concerned, do not fail to disconnect the extender from the seat belt after the above operation in order to activate the front passenger airbag correctly when getting into the vehicle next time.

When not in use, remove the extender and store in the vehicle for future use.

CAUTION

- **After inserting the tab, make sure the tab and buckle are locked and that the lap and shoulder portions of the belt and the seat belt extender are not twisted.**
- **Do not insert coins, clips, etc. in the buckle as this may prevent you from properly latching the tab and buckle.**
- **If the seat belt does not function normally, immediately contact your Scion dealer. Do not use the seat until the seat belt is fixed, because it cannot protect an adult occupant or your child from injury.**

—Seat belt pretensioners

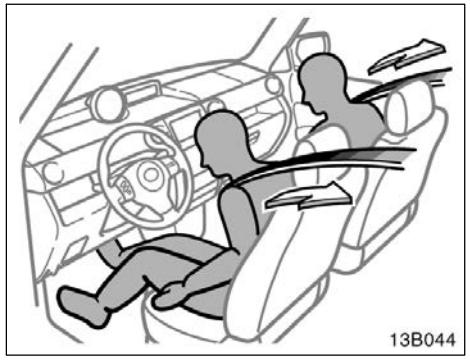

Both front seats are equipped with seat belt pretensioners and are designed to be activated in response to a severe frontal impact.

When the sensor detects a severe frontal impact, the front seat belts are quickly drawn back by the retractors so that the belts snugly restrain the occupants.

The front passenger's seat belt pretensioner will not activate if no passenger is detected in the front passenger seat by the front passenger occupant classification system. However, the front passenger's seat belt pretensioner may activate if luggage is put on the seat, or the seat belt is buckled up regardless of the presence of an occupant in the seat. (As for the front passenger occupant classification system, see "—Front passenger occupant classification system" on page 47.)

The seat belt pretensioners and SRS airbags may not operate together in all collisions.

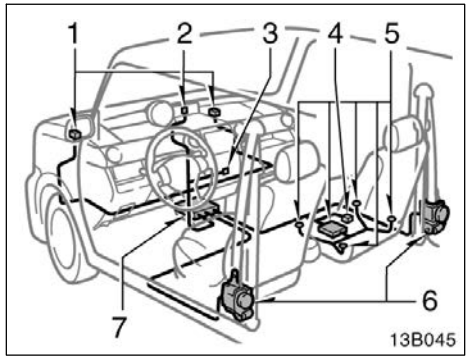

The seat belt pretensioner system consists mainly of the following components, and their locations are shown in the illustration.

1. Front airbag sensors
2. SRS warning light
3. “AIRBAG ON” and “AIRBAG OFF” indicator lights
4. Front passenger’s seat belt buckle switch
5. Front passenger occupant classification system (ECU and sensors)
6. Seat belt pretensioner assemblies
7. Airbag sensor assembly

The seat belt pretensioners are controlled by the airbag sensor assembly. The airbag sensor assembly consists of a safing sensor and airbag sensor.

When the seat belt pretensioners are activated, an operating noise may be heard and a small amount of non–toxic gas may be released. This does not indicate that a fire is occurring. This gas is normally harmless.

Once the seat belt pretensioners have been activated, the seat belt retractors remain locked.

⚠ CAUTION

Do not modify, remove, strike or open the seat belt pretensioner assemblies, airbag sensor or surrounding area or wiring. Failure to follow these instructions may prevent the seat belt pretensioners from activating correctly, cause sudden operation of the system or disable the system, which could result in death or serious injury. Consult your Scion dealer about any repair and modification.

NOTICE

Do not perform any of the following changes without consulting your Scion dealer. Such changes can interfere with proper operation of the seat belt pretensioners in some cases.

- ***Installation of electronic devices such as a mobile two–way radio, cassette tape player or compact disc player***
- ***Repairs on or near the front seat belt retractor assemblies***
- ***Modification of the suspension system***
- ***Modification of the front end structure***
- ***Attachment of a grille guard (bull bar, kangaroo bar, etc.), snowplow, winches or any other equipment to the front end***
- ***Repairs made on or near the front fenders, front end structure or console***

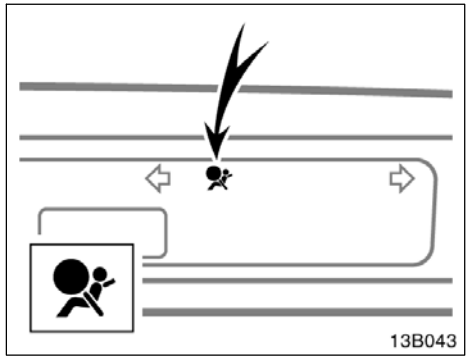

This indicator comes on when the ignition key is turned to the "ON" position. It goes off after about 6 seconds. This means the seat belt pretensioners are operating properly.

This warning light system monitors the airbag sensor assembly, front airbag sensors, driver's seat position sensor, driver's seat belt buckle switch, front passenger occupant classification system, "AIRBAG ON" indicator light, "AIRBAG OFF" indicator light, front passenger's seat belt buckle switch, seat belt pretensioner assemblies, inflators, interconnecting wiring and power sources. (For details, see "Service reminder indicators and warning buzzers" on page 85.)

If any of the following conditions occurs, this indicates a malfunction of the airbags or seat belt pretensioners. Contact your Scion dealer as soon as possible.

- When the ignition key is turned to the "ON" position, the light does not come on or remains on for more than about 6 seconds or flashes.
- The light comes on or starts flashing while driving.
- If any seat belt does not retract or cannot be pulled out due to a malfunction or activation of the relevant seat belt pretensioner.
- The seat belt pretensioner assembly or surrounding area has been damaged.

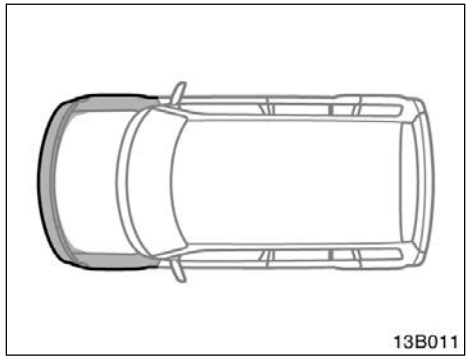

In the following cases, contact your Scion dealer as soon as possible:

- The front of the vehicle (shaded in the illustration) was involved in an accident that was not severe enough to cause the seat belt pretensioners to operate.
- Either seat belt pretensioner assembly or surrounding area is scratched, cracked, or otherwise damaged.

SRS airbags—
—SRS driver airbag and front passenger airbag

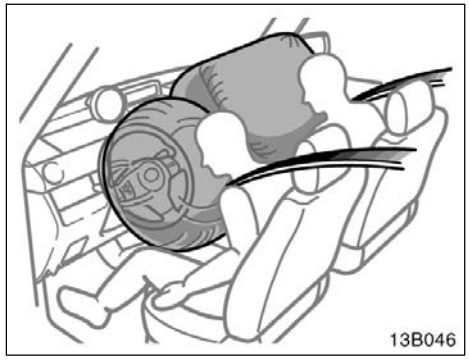

The SRS (Supplemental Restraint System) front airbags are designed to provide further protection for the driver and front passenger in addition to the primary safety protection provided by the seat belts.

Your vehicle is equipped with “ADVANCED AIRBAGS” designed based on US motor vehicle safety standards (FMVSS208). The airbag system controls airbag deployment power for the driver and front passenger. The driver airbag system consists of the driver’s seat position sensor, etc. The front passenger’s airbag system consists of the front passenger occupant classification sensor, etc.

In response to a severe frontal impact, the SRS front airbags work with the seat belts to help reduce injury by inflating. The SRS front airbags help reduce injuries mainly to the driver’s or front passenger’s head or chest caused by hitting the vehicle interior.

The SRS front passenger airbag will not activate if there is no passenger sitting in the front passenger seat. However, the front passenger airbag may deploy if luggage is put in the seat, or the seat belt is buckled up, regardless of the presence of an occupant in the seat. (As for the front passenger occupant classification system, see “—Front passenger occupant classification system” on page 47.)

Always wear your seat belt properly.

CAUTION

- **The SRS front airbag system is designed only as a supplement to the primary protection of the driver and front passenger seat belt systems. The driver and front passenger can be killed or seriously injured by the inflating airbags if they do not wear the available seat belts properly. During sudden braking just before a collision, an unrestrained driver or front passenger can move forward into direct contact with or close proximity to the airbag which may then deploy during the collision. To ensure maximum protection in an accident, the driver and all passengers in the vehicle must wear their seat belts properly. Wearing a seat belt properly during an accident reduces the chances of death or serious injury or being thrown out of the vehicle. For instructions and precautions concerning the seat belt system, see "Seat belts" on page 29.**

- **Improperly seated and/or restrained infants and children can be killed or seriously injured by the deploying airbags. An infant or child who is too small to use a seat belt should be properly secured using a child restraint system. Scion strongly recommends that all infants and children be placed in the rear seat of the vehicle and properly restrained. The rear seat is the safest for infants and children. For instructions concerning the installation of a child restraint system, see "Child restraint" on page 52.**

The SRS front airbags are designed to deploy in severe (usually frontal) collisions where the magnitude and duration of the forward deceleration of the vehicle exceed the designed threshold level.

The SRS front airbags will deploy if the severity of the impact is above the designed threshold level, comparable to an approximate 25 km/h (15 mph) collision when the vehicle has the impact straight into a fixed barrier that does not move or deform.

However, this threshold velocity will be considerably higher if the vehicle strikes an object, such as a parked vehicle or sign pole, which can move or deform on impact, or if the vehicle is involved in an underride collision (e.g. a collision in which the front of the vehicle "underrides", or goes under, the bed of a truck, etc.).

It is possible that in some collisions where the forward deceleration of the vehicle is very close to the designed threshold level, the SRS front airbags and the seat belt pretensioners may not activate together.

Always wear your seat belts properly.

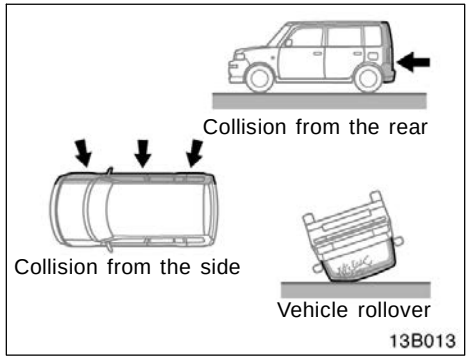

The SRS front airbags are not generally designed to inflate if the vehicle is involved in a side or rear collision, if it rolls over, or if it is involved in a low–speed frontal collision. But, whenever a collision of any type causes sufficient forward deceleration of the vehicle, deployment of the SRS front airbags may occur.

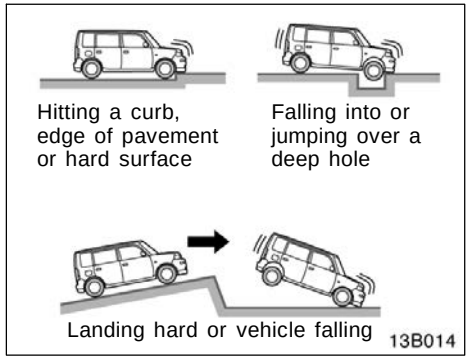

The SRS front airbags may also deploy if a serious impact occurs to the underside of your vehicle. Some examples are shown in the illustration.

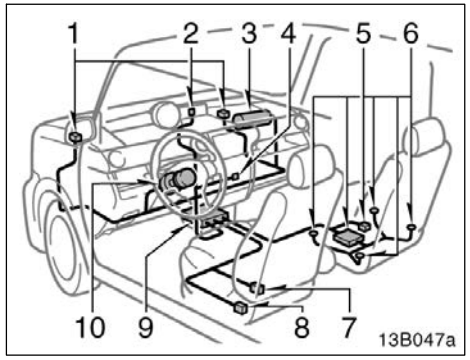

The SRS front airbag system consists mainly of the following components, and their locations are shown in the illustration.

1. Front airbag sensors
2. SRS warning light
3. Airbag module for front passenger (airbag and inflator)
4. “AIRBAG ON” and “AIRBAG OFF” indicator lights
5. Passenger’s seat belt buckle switch
6. Front passenger occupant classification system (ECU and sensors)

7. Driver's seat belt buckle switch
8. Driver's seat position sensor
9. Airbag sensor assembly
10. Airbag module for driver (airbag and inflator)

The airbag sensor assembly consists of a safing sensor and airbag sensor.

The front airbag sensors constantly monitor the forward deceleration of the vehicle. If an impact results in a forward deceleration beyond the designed threshold level, the system triggers the airbag inflators. At this time a chemical reaction in the inflators very quickly fills the airbags with non–toxic gas to help restrain the forward motion of the occupants. The front airbags then quickly deflate so that there is no obstruction of the driver's vision should it be necessary to continue driving.

When the airbags inflate, they produce a loud noise and release some smoke and residue along with non–toxic gas. This does not indicate a fire. This smoke may remain inside the vehicle for some time, and may cause some minor irritation to the eyes, skin or breathing. Be sure to wash off any residue as soon as possible to prevent any potential skin irritation with soap and water. If you can safely exit from the vehicle, you should do so immediately.

Deployment of the airbags happens in a fraction of a second, so the airbags must inflate with considerable force. While the system is designed to reduce serious injuries, primarily to the head and chest, it may also cause other, less severe injuries to the face, chest, arms and hands. These are usually in the nature of minor burns or abrasions and swelling, but the force of a deploying airbag can cause more serious injuries, especially if an occupant's hands, arms, chest or head is in close proximity to the airbag module at the time of deployment. This is why it is important for the occupant to: avoid placing any object or part of the body between the occupant and the airbag module; sit straight and well back into the seat; wear the available seat belt properly; and sit as far as possible from the airbag module, while still maintaining control of the vehicle.

Parts of the airbag module (steering wheel hub, airbag cover and inflator) may be hot for several minutes after deployment, so do not touch! The airbags inflate only once. The windshield may be damaged by absorbing some of the force of the inflating airbag.

⚠ CAUTION

The driver or front passenger who is too close to the steering wheel or dashboard during airbag deployment can be killed or seriously injured. Scion strongly recommends that:

- **The driver sit as far back as possible from the steering wheel while still maintaining control of the vehicle.**
- **The front passenger sit as far back as possible from the dashboard.**
- **All vehicle occupants be properly restrained using the available seat belts.**

- **If the seat belt extender has been connected to the driver's seat belt buckle without wearing the seat belt when using the extender in the driver's seat, the SRS driver's airbag system will judge that the driver wears the seat belt even if not wearing it. In this case, the driver's airbag may not activate correctly, causing death or serious injury in the event of a collision. Be sure to wear the seat belt with the seat belt extender. Otherwise, there will also not be any effective protection in a sudden stop or a collision provided by the seat belt.**

For instructions and precautions concerning the seating position, see "—Front seat precautions" on page 24.

- **Do not sit on the edge of the seat or lean against the dashboard when the vehicle is in use, since the front passenger airbag could inflate with considerable speed and force. Anyone who is up against, or very close to, an airbag when it inflates, can be killed or seriously injured. Sit up straight and well back in the seat, and always use your seat belt properly.**

- **Scion strongly recommends that all infants and children be placed in the rear seat of the vehicle and be properly restrained.**
- **Do not hold a child on your lap or in your arms. Use a child restraint system in the rear seat. For instructions concerning the installation of a child restraint system, see “Child restraint” on page 52.**

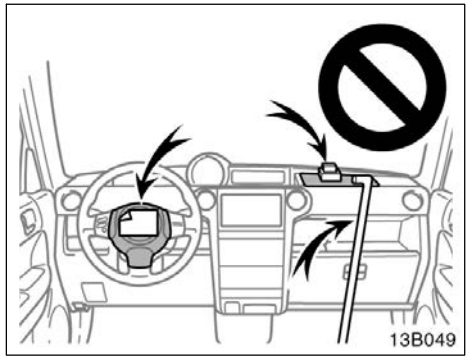

- **Do not put anything or any part of your body on or in front of the dashboard or steering wheel pad that houses the front airbag system. They might restrict inflation or cause death or serious injury as they are projected rearward by the force of the deploying airbags. Likewise, the driver and front passenger should not hold objects in their arms or on their knees.**

- **Do not modify or remove any wiring. Do not modify, remove, strike or open any components such as the steering wheel pad, steering wheel, column cover, dashboard near the front passenger airbag, front passenger airbag cover, front passenger airbag or airbag sensor assembly. Doing so may prevent the front airbag system from activating correctly, cause sudden activation of the system or disable the system, which could result in death or serious injury.**

Failure to follow these instructions can result in death or serious injury. Consult your Scion dealer about any repair and modification.

NOTICE

Do not perform any of the following changes without consulting your Scion dealer. Such changes can interfere with proper operation of the SRS front airbag system in some cases.

- ***Installation of electronic devices such as a mobile two–way radio, cassette tape player or compact disc player***
- ***Modification of the suspension system***
- ***Modification of the front end structure***
- ***Attachment of a grille guard (bull bar, kangaroo bar, etc.), snowplow, winches or any other equipment to the front end***
- ***Repairs made on or near the front fenders, front end structure, console, steering column, steering wheel or dashboard near the front passenger airbag***

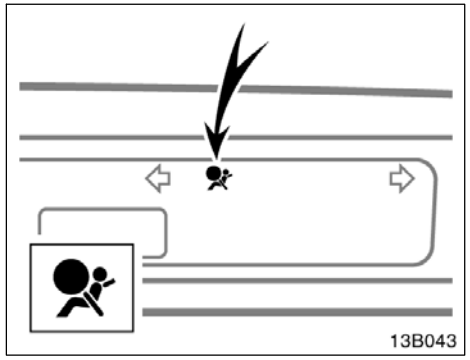

This indicator comes on when the ignition key is turned to the "ON" position. It goes off after about 6 seconds. This means the SRS front airbags are operating properly.

This warning light system monitors the airbag sensor assembly, front airbag sensors, driver's seat position sensor, driver's seat belt buckle switch, front passenger occupant classification system, "AIRBAG ON" indicator light, "AIRBAG OFF" indicator light, front passenger's seat belt buckle switch, seat belt pretensioner assemblies, inflators, interconnecting wiring and power sources. (For details, see "Service reminder indicators and warning buzzers" on page 85.)

If any of the following conditions occurs, this indicates a malfunction of the airbags or seat belt pretensioners. Contact your Scion dealer as soon as possible.

- When the ignition key is turned to the "ON" position, the light does not come on or remains on for more than about 6 seconds or flashes.
- The light comes on or starts flashing while driving.

The SRS warning light and "AIRBAG OFF" indicator light will come on if there is a malfunction in the front passenger occupant classification system.

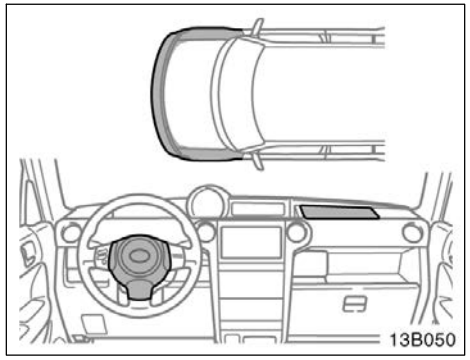

In the following cases, contact your Scion dealer as soon as possible:

- The SRS front airbags have been inflated.
- The front of the vehicle (shaded in the illustration) was involved in an accident that was not severe enough to cause the SRS front airbags to inflate.
- The pad section of the steering wheel or front passenger airbag cover (shaded in the illustration) is scratched, cracked, or otherwise damaged.

NOTICE

Do not disconnect the battery cables before contacting your Scion dealer.

—Front passenger occupant classification system

Your vehicle is equipped with a front passenger occupant classification system. This system detects the conditions 1. through 4. in the table on page 50 and based on these conditions activates or deactivates the following systems;

- Front passenger airbag
- Front passenger's seat belt pretensioner

The system monitors the weight and load on the front passenger seat, and the seat belt buckle switch to determine conditions 1. through 4.

In order for the system to detect the conditions correctly, do not do any of the following:

- Apply a heavy load to the front passenger seat.
- Attach a commercial seatback table, etc. to the front passenger seat seatback.
- Put weight on the front passenger seat by putting your hands or feet on the seatback from the rear passenger seat.

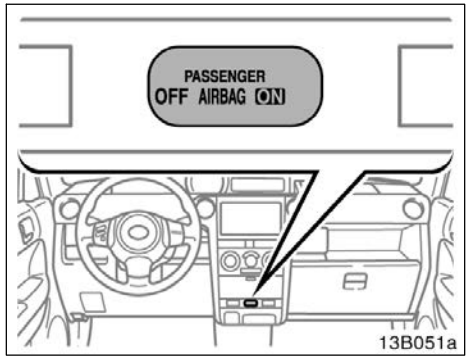

The “AIRBAG ON” and “AIRBAG OFF” indicator lights indicate the actuation of the front passenger airbag and front passenger’s seat belt pretensioner.

The “AIRBAG OFF” indicator light will be illuminated when the ignition key is turned to the “ON” position with the condition 2 in the table shown below.

If the front passenger occupant classification system determines that a person of adult size sits in the front passenger seat but the “AIRBAG OFF” indicator light is illuminated, one of the following is likely to have occurred:

- A rear passenger lifts the front passenger seat cushion with his/her legs.
- Objects are placed under the front passenger seat.
- The front passenger seatback is in contact with the rear seat.

To ensure the system correctly detects an adult sitting in the front passenger seat, make sure the above do not occur.

Make sure that the “AIRBAG ON” indicator light is illuminated when an adult is seated in the front passenger seat. If the “AIRBAG OFF” indicator light is illuminated, ask the passenger to sit up straight, well back in the seat, and with the seat belt worn correctly. If the “AIRBAG OFF” indicator light still remains illuminated, either ask the passenger to move to the rear seat, or if that is not possible, move the front passenger seat fully rearward.

The “AIRBAG ON” and “AIRBAG OFF” indicator lights will be illuminated initially when the ignition key is turned to the “ON” position. After about 4 seconds, they will go off. After that, the front passenger occupant classification system operates and judges which indicator light be illuminated.

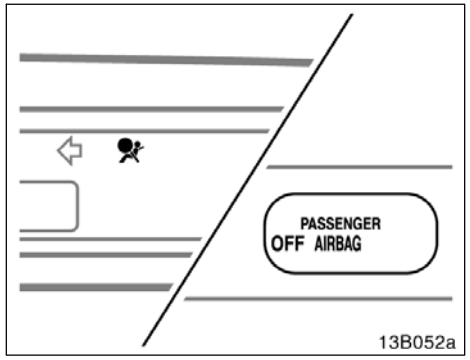

The SRS warning light and "AIRBAG OFF" indicator light will come on if there is a malfunction in the front passenger occupant classification system.

Condition and operation in the front passenger occupant classification system

Condition detected by the front passenger occupant classification system	Indicator/ warning light			Devices	
	“AIRBAG ON” and “AIRBAG OFF” indicator lights	SRS warning light	Front passenger’s seat belt reminder light	Front passenger airbag	Front passenger’s seat belt pretensioner
1. Adult*1	“AIRBAG ON”	Off	Flashing*4	Activated	
2. Child*2 or child restraint system*3	“AIRBAG OFF”*5	Off	Flashing*4	Deactivated	Activated
3. Unoccupied	Not illuminated	Off	Off	Deactivated	
4. There is a malfunction in the system	“AIRBAG OFF”	On	Off	Deactivated	Activated

*1: The system judges a person of adult size as an adult. When a smaller adult sits in the front passenger seat, the system may recognize him/her as a child depending on his/her physique and posture.

*2: When a larger child who has outgrown a child restraint system sits in the front passenger seat, the system may recognize him/her as an adult depending on his/her physique or posture.

*3: Never install a rear–facing child restraint system on the front passenger seat. A forward–facing child restraint system should only be installed on the front passenger seat when it is unavoidable. (See “Child restraint” on page 52 as for installing the child restraint system.)

*4: When the front passenger does not wear a seat belt.

*5: In case indicator is not illuminated, see “Child restraint” on page 52 as for installing the child restraint system properly.

⚠ CAUTION

To avoid potential death or serious injury when the front passenger occupant classification system does not detect the conditions correctly, observe the following:

- **Make sure the "AIRBAG ON" indicator light is illuminated when using the seat belt extender for the front passenger seat. If the "AIRBAG OFF" indicator light is illuminated, disconnect the extender tongue from the seat belt buckle, then reconnect the seat belt. Reconnect the seat belt extender after making sure the "AIRBAG ON" indicator light is illuminated. If you use the seat belt extender while the "AIRBAG OFF" indicator light is illuminated, the front passenger airbag may not activate correctly, which could cause death or serious injury in the event of collision.**
- **Do not recline the front passenger seat seatback so that it interferes with a rear seat as it may cause the "AIRBAG OFF" indicator light be illuminated. If the seatback interferes with the rear seat, return the seatback to a position where it does not interfere with the rear seat.**

  Keep the front passenger seatback as upright as possible when the vehicle is moving. Reclining the seatback excessively may lessen the effectiveness of the seat belt system.
- **If an adult sits in the front passenger seat, the "AIRBAG ON" indicator light should be illuminated. If the "AIRBAG OFF" indicator light is illuminated, ask the passenger to sit up straight, well back in the seat, feet on the floor, and with the seat belt worn correctly. If the "AIRBAG OFF" indicator light still remains illuminated, either ask the passenger to move to the rear seat, or if that is not possible, move the front passenger seat fully rearward.**
- **Wear the seat belt properly.**
- **Make sure the front passenger's seat belt tab has not been left inserted into the buckle before someone sits in the front passenger seat.**
- **Do not apply a heavy load to the front passenger seat.**
- **Do not put weight on the front passenger seat by putting your hands or feet on the front passenger seat seatback from the rear passenger seat.**
- **Do not let a rear passenger lift the front passenger seat with their feet or press on the seatback with their legs.**
- **Do not put objects under the front passenger seat.**
- **Child restraint systems installed on the rear seat should not contact the front seatbacks.**

- **When it is unavoidable to install the forward−facing child restraint system on the front passenger seat, install the child restraint system on the front passenger seat in the proper order. (As for the installation order, see "—Installation with seat belt" on page 55.)**
- **Do not remove the front seats.**
- **Do not kick the front passenger seat or subject it to severe impact. Otherwise, the SRS warning light may come on to indicate a malfunction of the detection system. In this case, contact your Scion dealer immediately.**

The "AIRBAG ON" indicator light may be illuminated (the front passenger airbag and side airbag on the front passenger seat may deploy) even if observing the above cautions, when a child sits in, or a forward−facing child restraint system is installed on the front passenger seat. Refer to all the cautions in "SRS airbags" on page 40 and "Child restraint" described below.

Child restraint—
—Child restraint precautions

Scion strongly urges the use of appropriate child restraint systems for children.

The laws of all 50 states in the U.S.A. now require the use of a child restraint system.

Your vehicle conforms to SAE J1819.

If a child is too large for a child restraint system, the child should sit in the rear seat and must be restrained using the vehicle's seat belt. See "Seat belts" on page 29 for details.

CAUTION

- **For effective protection in automobile accidents and sudden stops, a child must be properly restrained, using a seat belt or child restraint system depending on the age and size of the child. Holding a child in your arms is not a substitute for a child restraint system. In an accident, the child can be crushed against the windshield, or between you and the vehicle's interior.**

- **Scion strongly urges use of a proper child restraint system which conforms to the size of the child, installed on the rear seat. According to accident statistics, the child is safer when properly restrained in the rear seat than in the front seat.**
- **Never install a rear−facing child restraint system on the front passenger seat even if the "AIRBAG OFF" indicator light is illuminated. In the event of an accident, the force of the rapid inflation of the front passenger airbag can cause death or serious injury to the child if the rear−facing child restraint system is installed on the front passenger seat.**

- **A forward–facing child restraint system should be allowed to be installed on the front passenger seat only when it is unavoidable. Always move the seat as far back as possible even if the "AIRBAG OFF" indicator light is illuminated, because the front passenger airbag could inflate with considerable speed and force. Otherwise, the child may be killed or seriously injured.**
- **Do not use the seat belt extender when installing a child restraint system on the front or rear passenger seat. If installing a child restraint system with the seat belt extender connected to the seat belt, the seat belt will not securely hold the child restraint system, which could cause death or serious injury to the child or other passengers in the event of collision.**

- **Make sure you have complied with all installation instructions provided by the child restraint manufacturer and that the system is properly secured. If it is not secured properly, it may cause death or serious injury to the child in the event of a sudden stop or accident.**

—Child restraint system

A child restraint system for a small child or baby must itself be properly restrained on the seat with the lap portion of the lap/shoulder belt. You must carefully consult the manufacturer's instructions which accompany the child restraint system.

To provide proper restraint, use a child restraint system following the manufacturer's instructions about the appropriate age and size of the child for the child restraint system.

Install the child restraint system correctly following the instructions provided by its manufacturer. General directions are also provided under the following illustrations.

The child restraint system should be installed on the rear seat. According to accident statistics, the child is safer when properly restrained in the rear seat than in the front seat.

When not using the child restraint system, keep it secured with the seat belt or place it somewhere other than the passenger compartment. This will prevent it from injuring passengers in the event of a sudden stop or accident.

—Types of child restraint system

Child restraint systems are classified into the following 3 types depending on the child's age and size.

(A) Infant seat

(B) Convertible seat

(C) Booster seat

Install the child restraint system following the instructions provided by its manufacturer.

Your vehicle has anchor brackets for securing the top strap of a child restraint system.

For instructions about how to use the anchor bracket, see "—Using a top strap" on page 64.

The child restraint lower anchorages approved for your vehicle may also be used. See "—Installation with child restraint lower anchorages" on page 67.

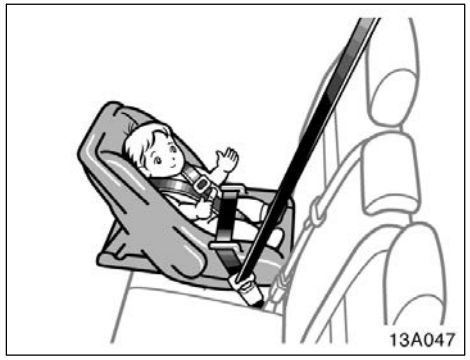

(A) Infant seat

(C) Booster seat

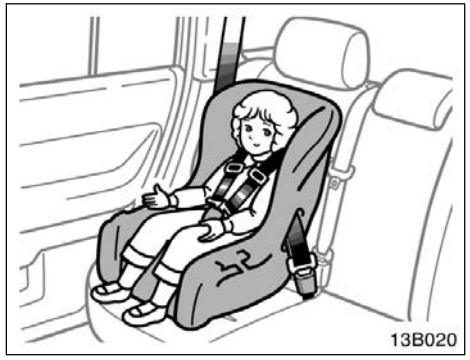

(B) Convertible seat

—Installation with seat belt

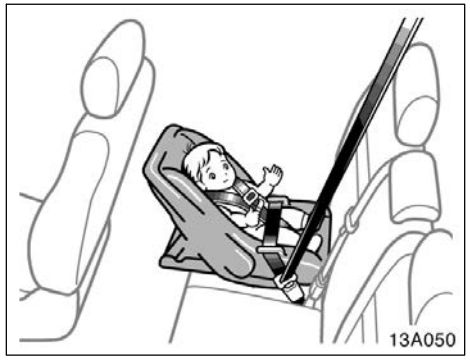

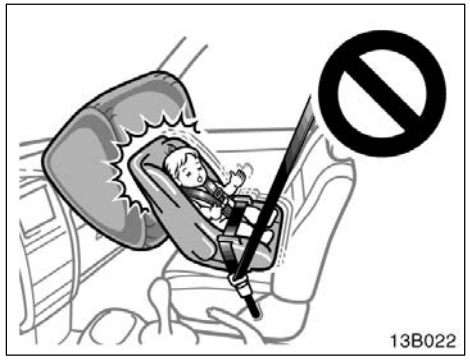

(A) INFANT SEAT INSTALLATION

An infant seat must be used in rear−facing position only.

⚠ CAUTION

- **Never install a rear−facing child restraint system on the front passenger seat even if the "AIRBAG OFF" indicator light is illuminated. In the event of an accident, the impact of the rapid inflation of the front passenger airbag could cause death or serious injury to the child if the rear−facing child restraint system is installed on the front passenger seat.**

- **Do not install a child restraint system on the rear seat if it interferes with the lock mechanism of the front seats. Otherwise, the child or front seat occupant(s) may be killed or seriously injured in case of sudden braking or a collision.**
- **If the driver's seat position does not allow sufficient space for safe installation, install the child restraint system on the rear right seat.**

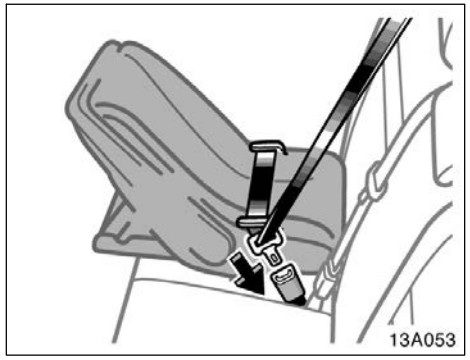

1. Run the lap and shoulder belt through or around the infant seat following the instructions provided by its manufacturer and insert the tab into the buckle taking care not to twist the belt. Keep the lap portion of the belt tight.

⚠ CAUTION

- **After inserting the tab, make sure the tab and buckle are locked and that the lap and shoulder portions of the belt are not twisted.**
- **Do not insert coins, clips, etc. in the buckle as this may prevent you from properly latching the tab and buckle.**
- **If the seat belt does not function normally, it cannot protect your child from death or serious injury. Contact your Scion dealer immediately. Do not install the child restraint system on the seat until the seat belt is fixed.**

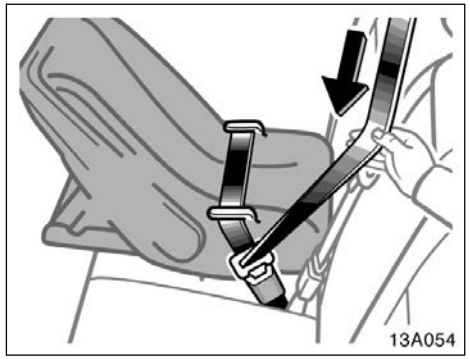

2. Fully extend the shoulder belt to put it in the lock mode. When the belt is then retracted even slightly, it cannot be extended.

To hold the infant seat securely, make sure the belt is in the lock mode before letting the belt retract.

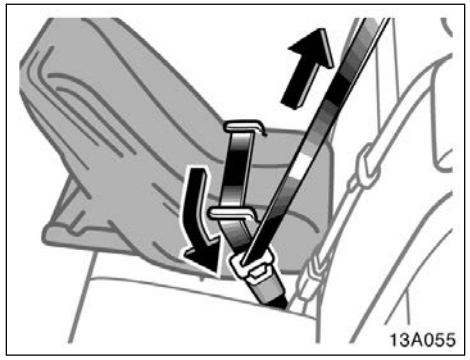

3. While pressing the infant seat firmly against the seat cushion and seatback, let the shoulder belt retract as far as it will go to hold the infant seat securely.

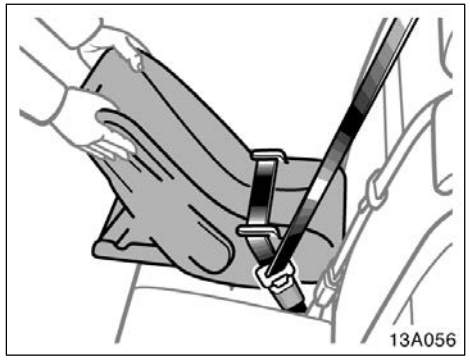

⚠ CAUTION

Push and pull the child restraint system in different directions to be sure it is secure. Follow all the installation instructions provided by its manufacturer.

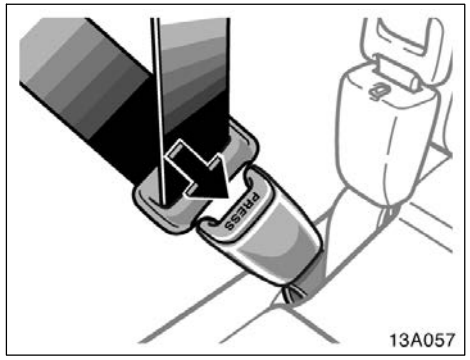

4. To remove the infant seat, press the buckle release button and allow the belt to retract completely. The belt will move freely again and be ready to work for an adult or older child passenger.

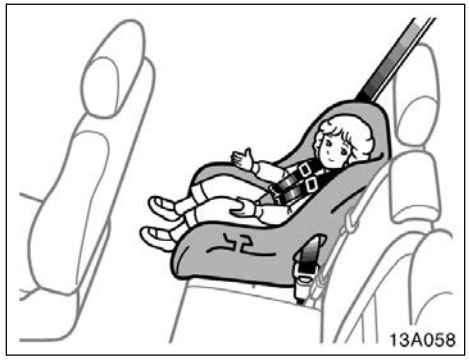

(B) CONVERTIBLE SEAT INSTALLATION

A convertible seat must be used in forward–facing or rear–facing position depending on the age and size of the child. When installing, follow the manufacturer's instructions about the applicable age and size of the child as well as directions for installing the child restraint system.

Install the child restraint system on the front passenger seat only when it is unavoidable. Your vehicle is equipped with a front passenger occupant classification system. In order to activate the occupant classification system correctly, install the forward–facing child restraint system on the front passenger seat in the following order:

1. Turn the ignition key to the "ON" position.
2. Move the front passenger seat to the rearward position.
3. Put the child restraint system on the front passenger seat without putting your weight on the front passenger seat.
4. Insert the seat belt tab into the seat belt buckle.
5. Fully extend the shoulder belt to put it in the lock mode. When the belt is then retracted even slightly, it cannot be extended. To hold the seat securely, make sure the belt is in the lock mode before letting the belt retract.
6. While pressing the convertible seat firmly against the seat cushion and seatback, let the shoulder belt retract as far as it will go to hold the convertible seat securely.

⚠ CAUTION

Push and pull the child restraint system in different directions to be sure it is secure. Follow all the installation instructions provided by its manufacturer.

7. Put a child on the child restraint system and secure the child, complying with the instructions provided by the child restraint system manufacturer.

The “AIRBAG OFF” indicator light should be illuminated when the ignition key is turned to the “ON” position and the child is in the child restraint system after following these procedures. The “AIRBAG OFF” indicator light indicates the SRS front passenger airbag will not deploy. If the “AIRBAG ON” indicator light is illuminated, remove the child restraint system and reinstall it with the engine off. If the “AIRBAG ON” indicator light is illuminated when the ignition key is turned to the “ON” position, then the SRS front passenger airbag may deploy in an accident. Do not drive the vehicle in this condition. Remove the child restraint system and contact your Scion dealer.

CAUTION

- **Never install a rear−facing child restraint system on the front passenger seat. A forward−facing child restraint system should only be installed on the front passenger seat when unavoidable. If you must install the child restraint system on the front passenger seat, put the seat in its most rearward position, and install the forward−facing child restraint system in the proper order. Otherwise, the front passenger occupant classification system can not detect the presence of the child restraint system and the front passenger airbag could deploy.**

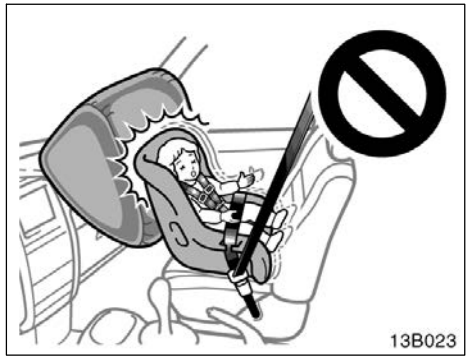

CAUTION

- **Never install a rear−facing child restraint system on the front passenger seat even if the “AIRBAG OFF” indicator light is illuminated. In the event of an accident, the impact of the rapid inflation of the front passenger airbag could cause death or serious injury to the child if the rear−facing child restraint system is installed on the front passenger seat.**

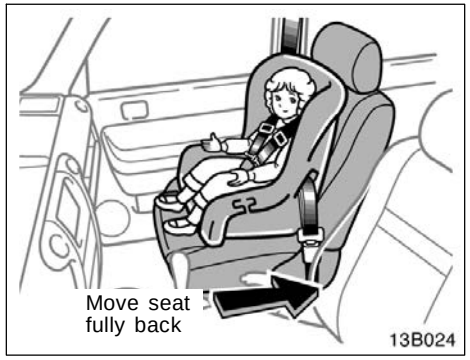

- **A forward−facing child restraint system should be allowed to be installed on the front passenger seat only when it is unavoidable. Always move the seat as far back as possible even if the "AIRBAG OFF" indicator light is illuminated, because the front passenger airbag could inflate with considerable speed and force. Otherwise, the child may be killed or seriously injured.**

- **Do not install a child restraint system on the rear seat if it interferes with the lock mechanism of the front seats. Otherwise, the child or front seat occupant(s) may be killed or seriously injured in case of sudden braking or a collision.**
- **If the driver's seat position does not allow sufficient space for safe installation, install the child restraint system on the rear right seat.**

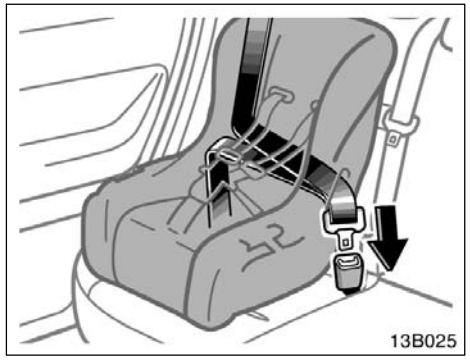

1. Run the lap and shoulder belt through or around the convertible seat following the instructions provided by its manufacturer and insert the tab into the buckle taking care not to twist the belt. Keep the lap portion of the belt tight.

⚠ CAUTION

- **After inserting the tab, make sure the tab and buckle are locked and that the lap and shoulder portions of the belt are not twisted.**
- **Do not insert coins, clips, etc. in the buckle as this may prevent you from properly latching the tab and buckle.**
- **If the seat belt does not function normally, it cannot protect your child from death or serious injury. Contact your Scion dealer immediately. Do not install the child restraint system on the seat until the seat belt is fixed.**

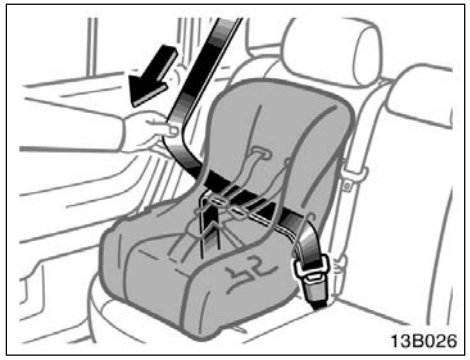

2. Fully extend the shoulder belt to put it in the lock mode. When the belt is then retracted even slightly, it cannot be extended.

To hold the convertible seat securely, make sure the belt is in the lock mode before letting the belt retract.

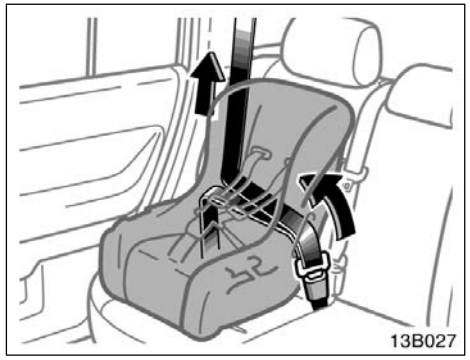

3. While pressing the convertible seat firmly against the seat cushion and seatback, let the shoulder belt retract as far as it will go to hold the convertible seat securely.

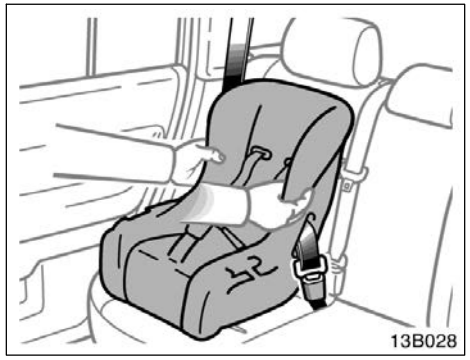

⚠ CAUTION

Push and pull the child restraint system in different directions to be sure it is secure. Follow all the installation instructions provided by its manufacturer.

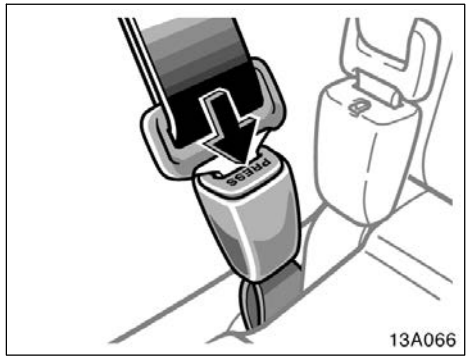

4. To remove the convertible seat, press the buckle release button and allow the belt to retract completely. The belt will move freely again and be ready to work for an adult or older child passenger.

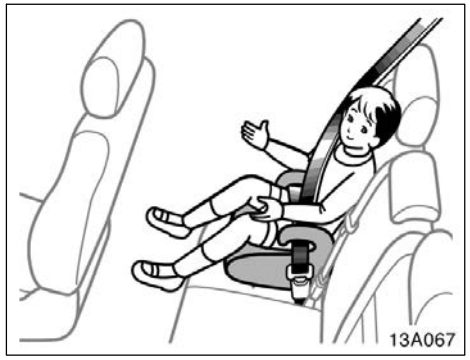

(C) BOOSTER SEAT INSTALLATION

A booster seat must be used in forward−facing position only.

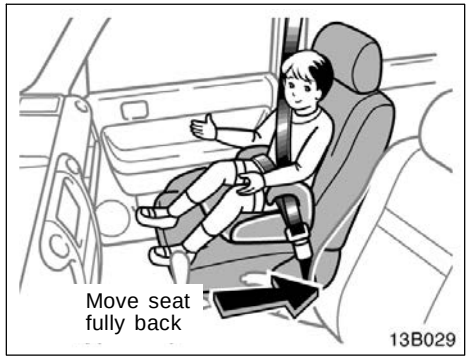

⚠ CAUTION

A forward−facing child restraint system should be allowed to be installed on the front passenger seat only when it is unavoidable. Always move the seat as far back as possible even if the "AIRBAG OFF" indicator light is illuminated, because the front passenger airbag could inflate with considerable speed and force. Otherwise, the child may be killed or seriously injured.

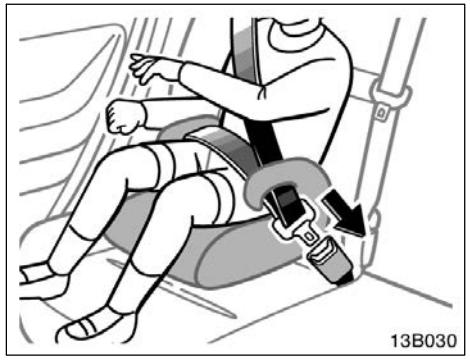

1. Sit the child on a booster seat. Run the lap and shoulder belt through or around the booster seat and across the child following the instructions provided by its manufacturer and insert the tab into the buckle taking care not to twist the belt.

Make sure the shoulder belt is correctly across the child's shoulder and that the lap belt is positioned as low as possible on the child's hips. See "Seat belts" on page 29 for details.

⚠ CAUTION

- **Always make sure the shoulder belt is positioned across the center of child's shoulder. The belt should be kept away from child's neck, but not falling off the child's shoulder. Otherwise, the child may be killed or seriously injured in case of sudden braking or a collision.**
- **Both high−positioned lap belts and loose−fitting belts could cause death or serious injuries due to sliding under the lap belt during a collision or other unintended event. Keep the lap belt positioned as low on a child's hips as possible.**
- **For child's safety, do not place the shoulder belt under the child's arm.**
- **After inserting the tab, make sure the tab and buckle are locked and that the lap and shoulder portions of the belt are not twisted.**
- **Do not insert coins, clips, etc. in the buckle as this may prevent you from properly latching the tab and buckle.**

- **If the seat belt does not function normally, it cannot protect your child from death or serious injury. Contact your Scion dealer immediately. Do not install the child restraint system on the seat until the seat belt is fixed.**

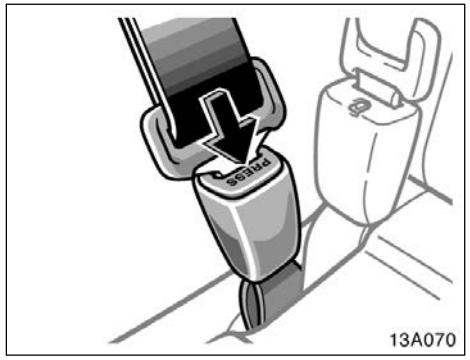

2. To remove the booster seat, press the buckle release button and allow the belt to retract.

—Using a top strap

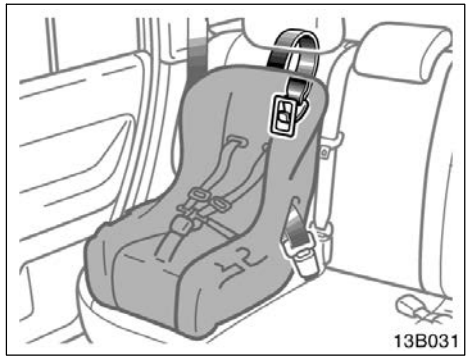

Follow the procedure below for a child restraint system that requires the use of a top strap.

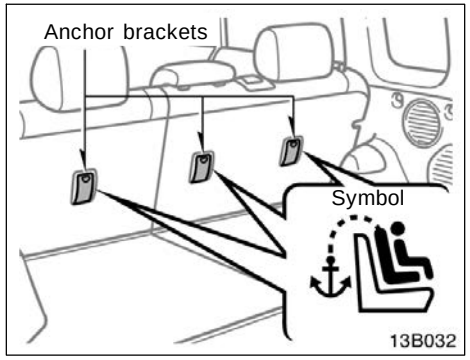

Use the anchor brackets on the back of the rear seatback to attach the strap.

Anchor brackets are installed for each rear seating positions.

This symbol indicates the location of the anchor brackets.

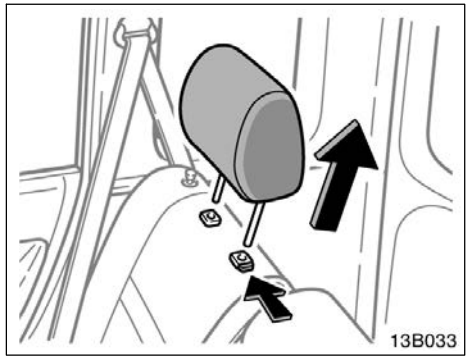

TO USE THE ANCHOR BRACKET:

1. Remove the head restraint.

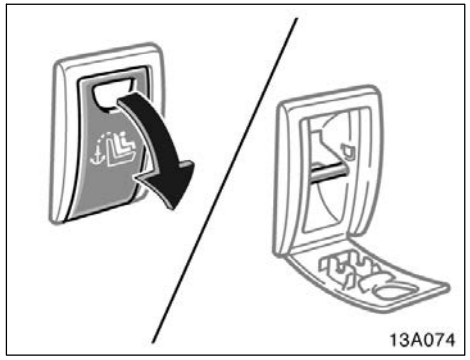

2. Open the cover of the anchor bracket.

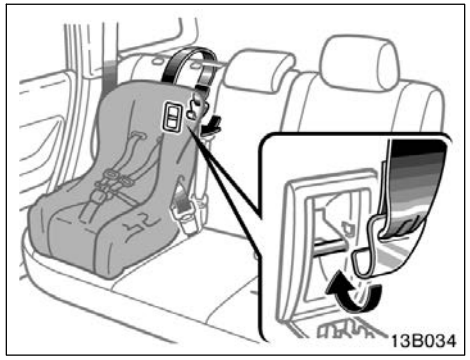

3. **Fix the child restraint system with the seat belt.**
4. **Latch the hook onto the anchor bracket and tighten the top strap.**

For instructions to install the child restraint system, see “Child restraint” on page 52.

⚠ CAUTION

- **Make sure the top strap is securely latched, and check that the child restraint system is secure by pushing and pulling it in different directions.**
- **Follow all the installation instructions provided by its manufacturer.**

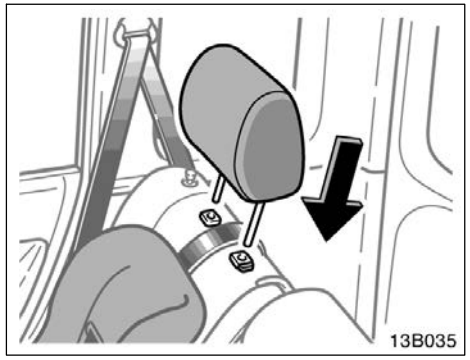

5. **Replace the head restraint.**

Be sure to close the cover when the anchor bracket is not in use.

—Installation with child restraint lower anchorages

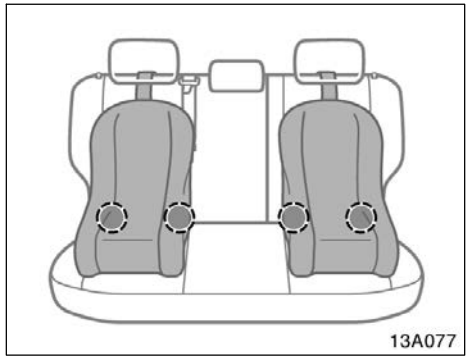

The lower anchorages for the child restraint system interfaced with the FMVSS225 specification are installed in the rear seat.

The anchorages are installed in the gap between the seat cushion and seatback of both outside rear seats.

Child restraint system interfaced with the FMVSS213 specification can be fixed with these anchorages. In this case, it is not necessary to fix the child restraint system with a seat belt on the vehicle.

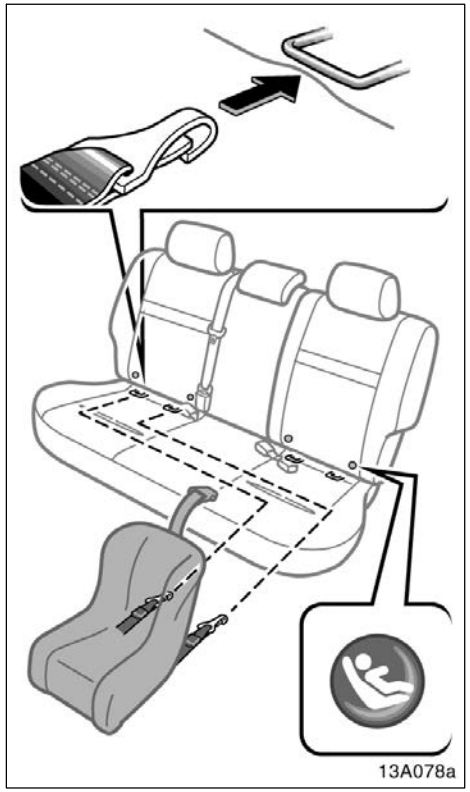

Type A

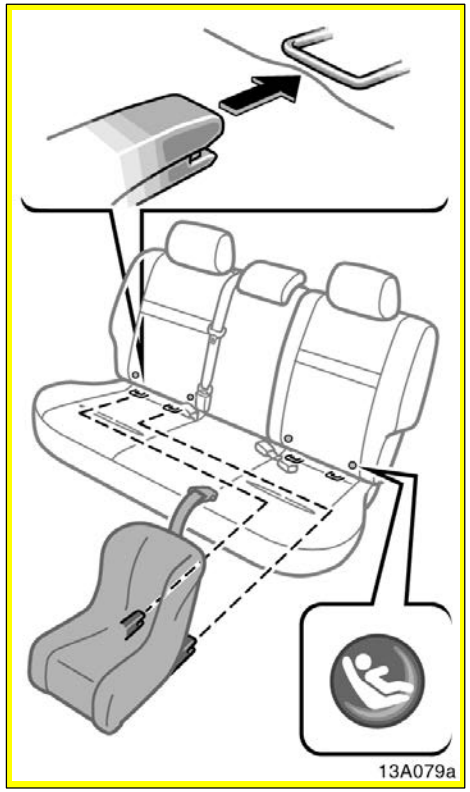

Type B

CHILD RESTRAINT SYSTEM INSTALLATION

1. **Widen the gap between the seat cushion and seatback slightly and confirm the position of the lower anchorages below the buttons in the seatback.**
2. **Type A—Latch the hooks of lower straps onto the anchorages and tighten the lower straps.**

   Type B—Latch the buckles onto the anchorages.

If your child restraint system has a top strap, it should be anchored. (For the installation of the top strap, see "—Using a top strap" on page 64.)

For installation details, refer to the instruction manual equipped with each product.

⚠ CAUTION

- **When using the lower anchorages for the child restraint system, be sure that there are no irregular objects around the anchorages or that the seat belt is not caught.**
- **Push and pull the child restraint system in different directions to be sure it is secure. Follow all the installation instructions provided by its manufacturer.**
- **Do not install a child restraint system on the rear seat if it interferes with the lock mechanism of the front seats. Otherwise, the child or front seat occupant(s) may be killed or seriously injured in case of sudden braking or a collision.**

SECTION 1–4

OPERATION OF INSTRUMENTS AND CONTROLS

Steering wheel and Mirrors

Tilt steering wheel 70
Outside rear view mirrors 70
Anti–glare inside rear view mirror 72
Vanity mirror 73

Tilt steering wheel

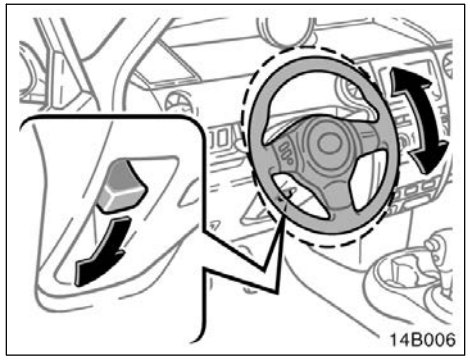

To change the steering wheel angle, hold the steering wheel, push down the lock release lever, tilt the steering wheel to the desired angle and return the lever to its original position.

⚠ CAUTION

- **Do not adjust the steering wheel while the vehicle is moving. Doing so may cause the driver to mishandle the vehicle and an accident may occur resulting in death or serious injuries.**
- **After adjusting the steering wheel, try moving it up and down to make sure it is locked in position.**

Outside rear view mirrors—

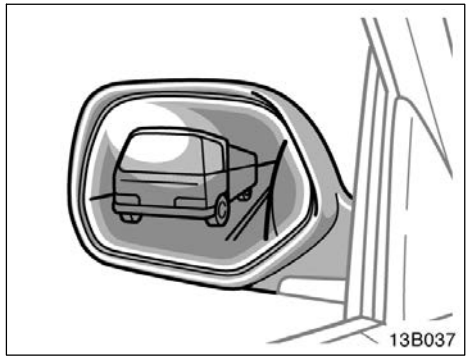

Adjust the mirror so that you can just see the side of your vehicle in the mirror.

Be careful when judging the size or distance of any object seen in the outside rear view mirror on the passenger's side because it is a convex mirror. Any object seen in a convex mirror will look smaller and farther away than when seen in a flat mirror.

⚠ CAUTION

Do not adjust the mirror while the vehicle is moving. Doing so may cause the driver to mishandle the vehicle and an accident may occur resulting in death or serious injuries.

—Power rear view mirror control

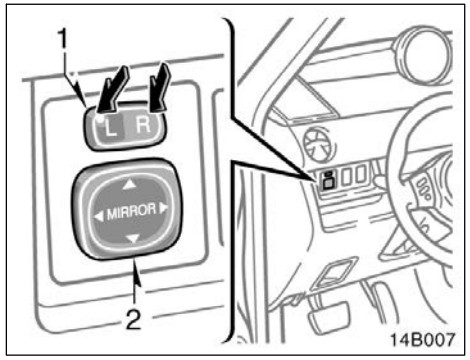

To adjust mirror, use the switches.

1. Master switch—To select the mirror to be adjusted
   Push the switch to “L” (left) or “R” (right).
2. Control switch—To move the mirror
   Push the switch in the desired direction.

Mirrors can be adjusted when the key is in the “ACC” or “ON” position.

NOTICE

If ice should jam the mirror, do not operate the control or scrape the mirror face. Use a spray de−icer to free the mirror.

—Folding rear view mirrors

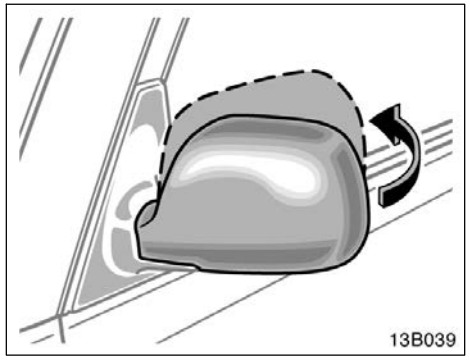

The rear view mirrors can be folded backward for parking in compact areas.

To fold the rear view mirror, push backward.

⚠ CAUTION

Do not drive with the mirrors folded backward. Both the driver and passenger side rear view mirrors must be extended and properly adjusted before driving.

NOTICE

Do not push backward more than the click. It may damage the mirror or vehicle.

Anti–glare inside rear view mirror

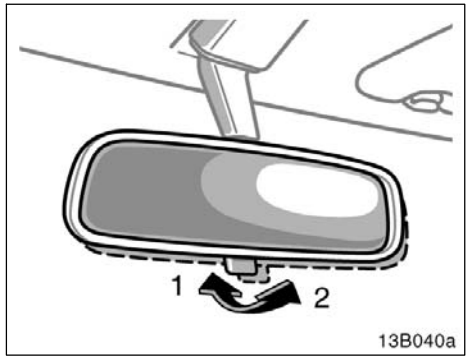

Adjust the mirror so that you can just see the rear of your vehicle in the mirror.

To reduce glare from the headlights of the vehicle behind you during night driving, operate the lever on the lower edge of the mirror.

Daylight driving—Lever at position 1

The reflection in the mirror has greater clarity at this position.

Night driving—Lever at position 2

Remember that by reducing glare you also lose some rear view clarity.

⚠ CAUTION

Do not adjust the mirror while the vehicle is moving. Doing so may cause the driver to mishandle the vehicle and an accident may occur resulting in death or serious injuries.

Vanity mirror

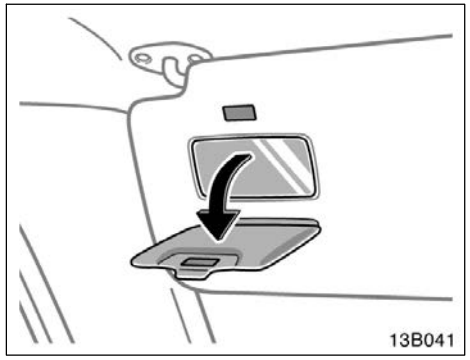

To use the vanity mirror, swing down the sun visor and open the cover.

SECTION 1–5

OPERATION OF INSTRUMENTS AND CONTROLS

Lights, Wipers and Defogger

Headlights and turn signals 76
Emergency flashers 77
Instrument panel light control 78
Interior light 78
Windshield wipers and washer 79
Rear window wiper and washer 79
Rear window defogger 80

Headlights and turn signals

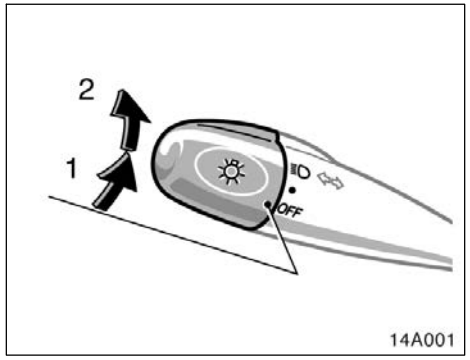

HEADLIGHTS

To turn on the following lights: Twist the headlight/turn signal lever knob.

Position 1—Parking, tail, license plate, side marker and instrument panel lights

Position 2—Headlights and all of the above

Light reminder buzzer

A buzzer will remind you to turn the lights off when the driver's door is opened if you remove the key with the headlight switch on.

NOTICE

To prevent the battery from being discharged, do not leave the lights on for a long period when the engine is not running.

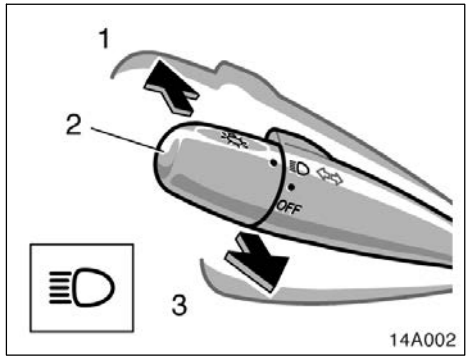

High−Low beams—For high beams, turn the headlights on and push the lever away from you (position 1). Pull the lever toward you (position 2) for low beams.

The headlight high beam indicator light (blue light) on the instrument panel will tell you that the high beams are on.

Flashing the high beam headlights (position 3)—Pull the lever all the way back. The high beam headlights turn off when you release the lever.

The high beam flasher works even when the headlight switch is off.

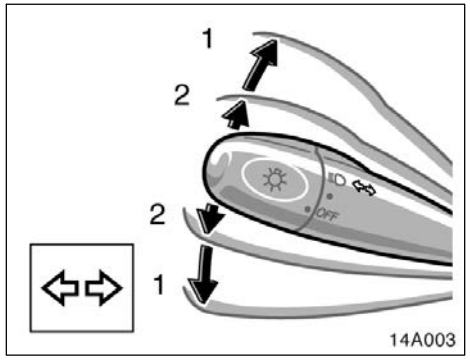

TURN SIGNALS

To signal a turn, push the headlight/ turn signal lever up or down to position 1.

The key must be in the “ON” position.

The lever automatically returns after you make a turn, but you may have to return it by hand after you change lanes.

To signal a lane change, move the lever up or down to the pressure point (position 2) and hold it.

If the turn signal indicator lights (green lights) on the instrument panel flash faster than normal, a front or rear turn signal bulb is burned out. See “Replacing light bulbs” on page 221.

Emergency flashers

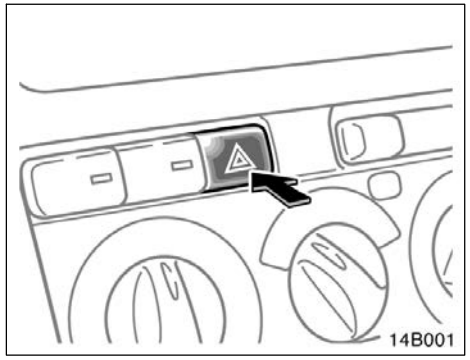

To turn on the emergency flashers, push the switch.

All the turn signal lights will flash. To turn them off, push the switch once again.

Turn on the emergency flashers to warn other drivers if your vehicle must be stopped where it might be a traffic hazard.

Always pull as far off the road as possible.

The turn signal light switch will not work when the emergency flashers are operating.

NOTICE

To prevent the battery from being discharged, do not leave the switch on longer than necessary when the engine is not running.

Instrument panel light control

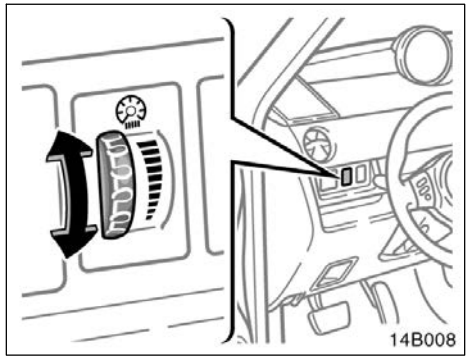

To adjust the brightness of the instrument panel lights, turn the dial.

Interior light

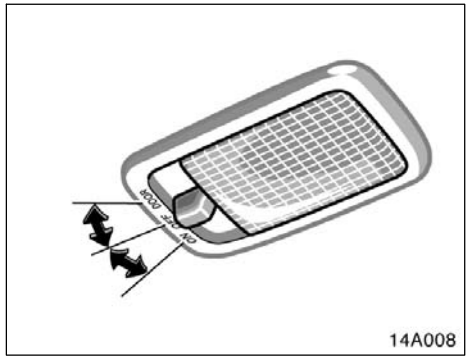

To turn on the interior light, slide the switch.

The interior light switch has the following positions:

“ON”—Keeps the light on all the time.

“OFF”—Turns the light off.

“DOOR”—Turns the light on when any door is opened.

ILLUMINATED ENTRY SYSTEM

With the switch in the “DOOR” position, the light comes on when any door is opened. After all the doors are closed, the light remains on for about 15 seconds and then goes out.

However, in the following cases, the light goes out immediately:

- All the side doors and back door are closed when the ignition key is in “ACC” or “ON” position.
- All the side doors and back door are locked when the light is still on.
- One door is closed with the lock button pushed in while the other doors are locked.

Windshield wipers and washer

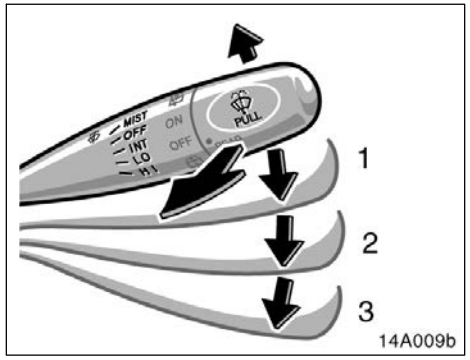

To turn on the windshield wipers, move the lever to the desired setting.

The key must be in the “ON” position.

Lever position	Speed setting
Position 1	Intermittent
Position 2	Slow
Position 3	Fast

For a single sweep of the windshield, push the lever up and release it.

To squirt washer fluid, pull the lever toward you.

If the windshield wipers are off, they will operate a couple of times after the washer squirts.

For instructions on adding washer fluid, see “Adding washer fluid” on page 221.

In freezing weather, warm the windshield with the defroster before using the washer. This will help prevent the washer fluid from freezing on your windshield, which can block your vision.

NOTICE
Do not operate the wipers if the windshield is dry. It may scratch the glass.

Rear window wiper and washer

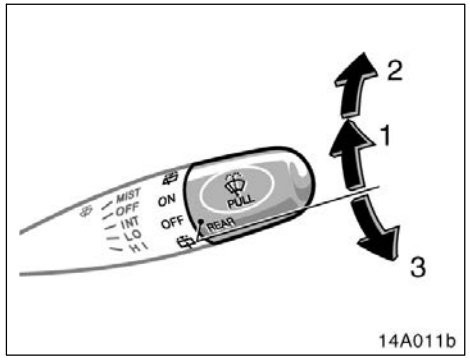

To turn on the rear window wiper, twist the lever knob upward. (Position 1)

The key must be in the “ON” position.

To squirt washer fluid on the rear window, twist the knob upward or downward as far as it will go (position 2 or 3). The knob automatically returns from these positions after you release it.

For instructions on adding washer fluid, see “Adding washer fluid” on page 221.

NOTICE
Do not operate the rear wiper if the rear window is dry. It may scratch the glass.

Rear window defogger

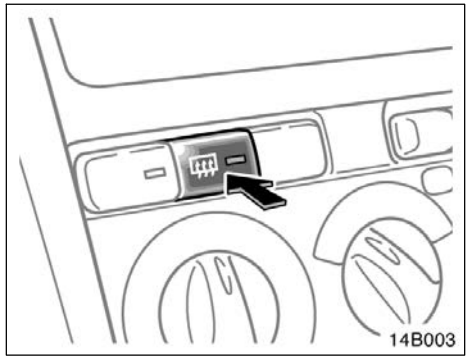

To defog or defrost the rear window, push the switch.

The key must be in the “ON” position.

The thin heater wires on the inside of the rear window will quickly clear the window surface. An indicator light will illuminate to indicate the defogger is operating.

Push the switch once again to turn the defoggers off.

The system will automatically shut off after the defogger has operated about 15 minutes.

Make sure you turn the defogger off when the window is clear. Leaving the defogger on for a long time could cause the battery to discharge, especially during stop–and–go driving. The defogger is not designed for drying rain water or for melting snow.

NOTICE

- ***To prevent the battery from being discharged, turn the switch off when the engine is not running.***
- ***When cleaning the inside of the rear window, be careful not to scratch or damage the heater wires or connectors.***

SECTION 1-6

OPERATION OF INSTRUMENTS AND CONTROLS

Gauges, Meters and Service reminder indicators

Fuel gauge 82
Engine coolant temperature indicator and warning lights 82
Tachometer 83
Odometer and two trip meters 83
Service reminder indicators and warning buzzers 85

Fuel gauge

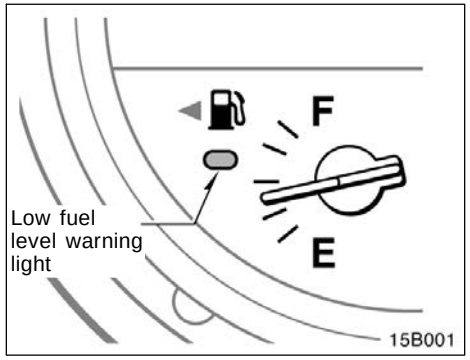

The gauge indicates the approximate quantity of fuel remaining in the tank when the ignition switch is on.

Nearly full—Needle at “F”
Nearly empty—Needle at “E”

It is a good idea to keep the tank over 1/4 full.

The needle moves when braking, accelerating or making turns. This is caused by the movement of the fuel in the tank.

If the fuel level approaches “E” or the low fuel level warning light comes on, fill the fuel tank as soon as possible.

On inclines or curves, due to the movement of fuel in the tank, the fuel gauge needle may fluctuate or the low fuel level warning light may come on earlier than usual.

If the fuel tank is completely empty, the malfunction indicator lamp comes on. Fill the fuel tank immediately.

The indicator lamp goes off after driving several times. If the indicator lamp does not go off, contact your Scion dealer as soon as possible.

Engine coolant temperature indicator and warning lights

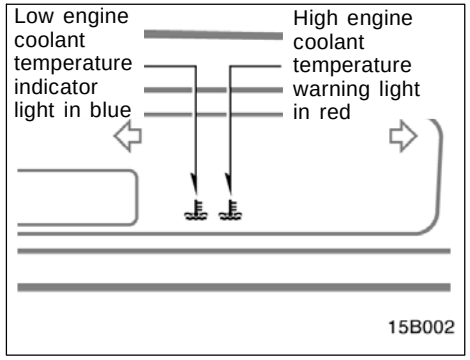

The indicator and warning lights indicate the engine coolant temperature when the ignition switch is on. The engine operating temperature will vary with changes in weather and engine load.

The high engine coolant temperature warning light will come on when the ignition key is turned to the “ON” position. After a few seconds, the light will go off.

If your engine coolant temperature is cool with the ignition switch on, the low engine coolant temperature indicator light comes on. If it keeps lighting on with the engine fully warmed, contact your Scion dealer as soon as possible to service the vehicle.

If the high engine coolant temperature warning light flashes, your engine is too hot. If your vehicle overheats, stop your vehicle and allow the engine to cool.

Your vehicle may overheat during severe operating conditions, such as:

- Driving up a long hill on a hot day.
- Reducing speed or stopping after high speed driving.
- Idling for a long period with the air conditioning on in stop–and–go traffic.

NOTICE

- ***Do not remove the thermostat in the engine cooling system as this may cause the engine to overheat. The thermostat is designed to control the flow of coolant to keep the temperature of the engine within the specified operating range.***
- ***Do not continue driving with an overheated engine. See "If your vehicle overheats" on page 163.***

Tachometer

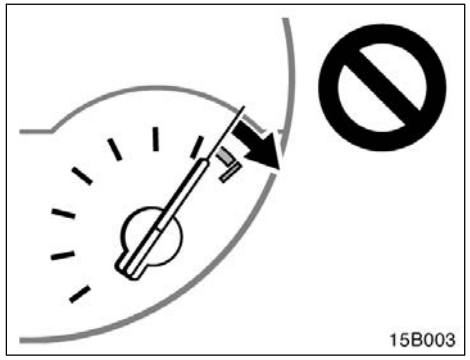

The tachometer indicates engine speed in thousands of rpm (revolutions per minute). Use it while driving to select correct shift points and to prevent engine lugging and over–revving.

Driving with the engine running too fast causes excessive engine wear and poor fuel economy. Remember, in most cases the slower the engine speed, the greater the fuel economy.

NOTICE

Do not let the indicator needle get into the red zone. This may cause severe engine damage.

Odometer and two trip meters

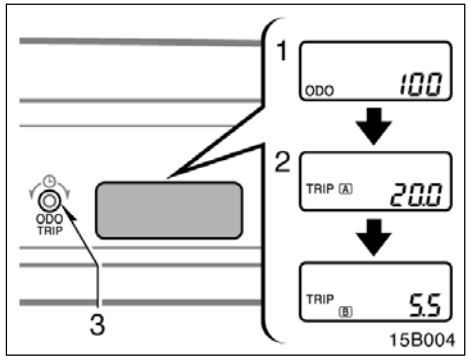

This meter displays the odometer and two trip meters.

1. Odometer—Shows the total distance the vehicle has been driven.
2. Two trip meters—Show two different distances independently driven since the last time each trip meter was set to zero.

   You can use one trip meter to calculate the fuel economy and the other to measure the distance on each trip. All trip meter data are cancelled if the electrical power source is disconnected.

3. Trip meter reset knob—It can reset the two trip meters to zero, and also change the meter display.

   To reset the trip meter A to zero, display the meter A reading, then push and hold the knob until the meter is set to zero. The same process can be applied for resetting the trip meter B.

   To change the meter display, quickly push and release the knob. The meter display changes in the order from the odometer to trip meter A to trip meter B, then back to the odometer each time you push.

Service reminder indicators and warning buzzers

If the indicator or buzzer comes on...		Do this.
(a)	BRAKE	If parking brake is off, stop immediately and contact Scion dealer.
(b)	(Indicator and buzzer)	Fasten driver's seat belt.
(c)	PASSENGER	Fasten front passenger's seat belt.
(d)	MAINT REQD	Replace engine oil.
(e)		Stop immediately and contact Scion dealer.
(f)	CHECK	Take vehicle to Scion dealer.
(g)		Fill up tank.

If the indicator or buzzer comes on...		Do this.
(h)		Stop and check.
(i)	ABS	Take vehicle to Scion dealer. If the brake system warning light is also on, stop immediately and contact Scion dealer.
(j)		Close all side doors and back door.
(k)		Take vehicle to Scion dealer immediately.
(l)	(in red)	Stop and check.
(m)	VSC	Take vehicle to Scion dealer.
(n)	Key reminder buzzer	Remove key.
(o)	Light reminder buzzer	Turn off lights.

(a) Brake System Warning Light

This light comes on in the following cases when the ignition key is in the “ON” position.

- **When the parking brake is applied...**

This light comes on for a few seconds when the ignition key is turned to the “ON” position even after the parking brake is released.

- **When the brake fluid level is low...**

CAUTION

It is dangerous to continue driving normally when the brake fluid level is low.

Have your vehicle checked at your Scion dealer in the following cases:

- The light does not come on even if the parking brake is applied when the ignition key is in the “ON” position.
- The light does not come on even if the ignition key is turned on with the parking brake released.

A warning light turning on briefly during operation does not indicate a problem.

CAUTION

If either of the following conditions occurs, immediately stop your vehicle at a safe place and contact your Scion dealer.

- **The light does not turn off even after the parking brake is released while the engine is running.**

  In this case, the brakes may not work properly and your stopping distance will increase. Depress the brake pedal firmly and bring the vehicle to an immediate stop.

- **The brake system warning light remains on together with the “ABS” warning light.**

  In this case, not only the anti−lock brake system will fail but also the vehicle will become extremely unstable during braking.

(b) Driver’s Seat Belt Reminder Light and Buzzer

The light and buzzer act as a reminder to buckle up the driver’s seat belt.

Once the ignition key is turned to the “ON” or “START” position, the reminder light and buzzer come on if the driver’s seat belt is not fastened. Unless the driver fastens the belt, the light continues flashing and 5 beeps sound.

(c) Front Passenger’s Seat Belt Reminder Light

The light acts as a reminder to have the front passenger buckle up the seat belt.

Once the ignition key is turned to the “ON” or “START” position, the reminder light comes on if a passenger sits in the front passenger seat and does not fasten the seat belt. Unless the front passenger fastens the belt, the light continues flashing.

If luggage or other load is placed on the front passenger seat, depending on its weight, causing the reminder light to flash.

(d) Engine Oil Replacement Reminder Light

This light acts as a reminder to replace the engine oil.

This light will come on when the ignition key is turned to the “ON” position, and will go off after a few seconds.

When you drive for about 8000 km (5000 miles) after the engine oil replacement, this light illuminates for about 3 seconds and then flashes for about 12 seconds after the ignition key is turned to the “ON” position. If you continue driving without engine oil replacement, and if the driving range exceeds 12000 km (7500 miles), the light will come on when the ignition key is turned to the “ON” position. The light will remain on thereafter.

If the light is flashing, we recommend that you replace the engine oil at an early opportunity depending on the driving and road conditions. If the light comes on, replace it as soon as possible.

The system must be reset after the engine oil replacement. Reset the system by following the procedure below:

1. Turn the ignition key to the “OFF” position with the odometer reading shown. (For details, see “Odometer and two trip meters” on page 83.)
2. Turn the ignition key to the “ON” position while holding down the trip meter reset knob.

Hold down the knob for at least 5 seconds. The light goes off, and the display shows zero for 1 second and changes to the odometer reading.

If the system fails to reset, the light will remain on or keep flashing.

(e) Charging System Warning Light

This warning light comes on when the ignition switch is turned to the “ON” position, and goes off when the engine is started.

When there are problems in the charging system while the engine is running, the warning light comes on.

NOTICE

When the charging system warning light comes on while the engine is running, malfunctions such as the engine drive belt being broken may have occurred. If the warning light comes on, immediately stop the vehicle in a safe place and contact your Scion dealer.

(f) Malfunction Indicator Lamp

This lamp comes on when the ignition key is turned to the "ON" position and goes off after the engine starts. This means that the warning light system is operating properly.

If the lamp remains on, first check the following.

- Empty fuel tank

  If the fuel tank is empty, refuel immediately.

- Loose fuel tank cap

  If the fuel tank cap is loose, securely tighten it.

These cases are temporary malfunctions. The malfunction indicator lamp will go off after taking several driving trips.

If the lamp does not go off even after several trips, contact your Scion dealer as soon as possible.

If the fuel tank is not empty or the fuel tank cap is not loose...

- There is a problem somewhere in the engine, emission control system, automatic transmission electrical system or warning light system itself.

Contact your Scion dealer as soon as possible to service the vehicle.

Emissions Inspection and Maintenance (I/M) programs

Your vehicle may not pass a state emission inspection if the malfunction indicator lamp remains on. Contact your Scion dealer to check your vehicle's emission control system and OBD (On–Board Diagnostics) system before taking your vehicle for the inspection.

For details, see "Emissions inspection and maintenance (I/M) programs" on page 194.

(g) Low Fuel Level Warning Light

This light comes on when the fuel level in the tank becomes very low. Fill up the tank as soon as possible.

On inclines or curves, due to the movement of fuel in the tank, the low fuel level warning light may come on earlier than usual.

(h) Low Engine Oil Pressure Warning Light

This light warns that the engine oil pressure is too low.

If it flickers or stays on while you are driving, pull off the road to a safe place and stop the engine immediately. Call a Scion dealer or qualified repair shop for assistance.

The light may occasionally flicker when the engine is idling or it may come on briefly after a hard stop. There is no cause for concern if it then goes out when the engine is accelerated slightly.

The light may come on when the oil level is extremely low. It is not designed to indicate low oil level, and the oil level must be checked using the level dipstick.

NOTICE

Do not drive the vehicle with the warning light on—even for one block. It may ruin the engine.

(i) "ABS" Warning Light

The light comes on when the ignition key is turned to the "ON" position. If the anti–lock brake system and the brake assist system work properly, the light turns off after a few seconds. Thereafter, if the systems malfunction, the light comes on again.

When the "ABS" warning light is on (and the brake system warning light is off), the anti–lock brake system, the brake assist system, the traction control system and the vehicle stability control system do not operate, but the brake system still operates conventionally.

When the "ABS" warning light is on (and the brake system warning light is off), the anti–lock brake system does not operate so that the wheels could lock up during a sudden braking or braking on slippery road surfaces.

If either of the following conditions occurs, this indicates a malfunction somewhere in the components monitored by the warning light system. Contact your Scion dealer as soon as possible to service the vehicle.

- When the ignition key is turned to the "ON" position, the light does not come on or remains on.
- The light comes on while you are driving.

A warning light turning on briefly during operation does not indicate a problem.

⚠ CAUTION

If the "ABS" warning light remains on together with the brake system warning light, immediately stop your vehicle at a safe place and contact your Scion dealer.

In this case, not only the anti–lock brake system will fail but also the vehicle will become extremely unstable during braking.

(j) Open Door Warning Light

This light remains on until all the side doors and back door are completely closed.

(k) SRS Warning Light

This indicator comes on when the ignition key is turned to the "ON" position. It goes off after about 6 seconds. This means the SRS front airbags and seat belt pretensioners are operating properly.

This warning light system monitors the airbag sensor assembly, front airbag sensors, driver's seat position sensor, driver's seat belt buckle switch, passenger's seat belt buckle switch, front passenger occupant classification system, "AIRBAG ON" indicator light, "AIRBAG OFF" indicator light, front passenger's seat belt buckle switch, seat belt pretensioner assemblies, inflators, interconnecting wiring and power sources.

If any of the following conditions occurs, this indicates a malfunction of the airbags or seat belt pretensioners. Contact your Scion dealer as soon as possible.

- When the ignition key is turned to the "ON" position, the light does not come on or remains on for more than about 6 seconds or flashes.
- The light comes on or starts flashing while you are driving.

(l) High Engine Coolant Temperature Warning Light

The light operates to warn that the engine is almost overheating.

The high engine coolant temperature warning light will come on when the ignition key is turned to the “ON” position. After a few seconds, the light will go off.

If your engine coolant temperature is cool with the ignition switch on, the low engine coolant temperature indicator light comes on. If it keeps lighting on with the engine fully warmed, contact your Scion dealer as soon as possible to service the vehicle.

If the high engine coolant temperature warning light flashes, your engine is too hot. If your vehicle overheats, stop your vehicle and allow the engine to cool.

Your vehicle may overheat during severe operating conditions, such as:

- Driving up a long hill on a hot day.
- Reducing speed or stopping after high speed driving.
- Idling for a long period with the air conditioning on in stop–and–go traffic.

NOTICE

- ***Do not remove the thermostat in the engine cooling system as this may cause the engine to overheat. The thermostat is designed to control the flow of coolant to keep the temperature of the engine within the specified operating range.***
- ***Do not continue driving with an overheated engine. See “If your vehicle overheats” on page 163.***

(m) “VSC” Warning Light

The light warns that there is a problem somewhere in the vehicle stability control system or traction control system.

The light will come on when the ignition key is turned to the “ON” position, and will go off after a few seconds.

If the light comes on while you are driving, the vehicle stability control system and traction control system do not work. However, as conventional braking operates when applied, there is no problem to continue your driving.

In the following cases, contact your Scion dealer:

- When the ignition key is turned to the “ON” position, the light does not come on or remains on.
- The light comes on while you are driving.

The “TRAC OFF” indicator light will come on when the “VSC” warning light comes on even if the “TRAC OFF” switch is not pushed.

(n) Key Reminder Buzzer

This buzzer acts as a reminder to remove the key when you open the driver's door with the ignition key in the "ACC" or "LOCK" position.

(o) Light Reminder Buzzer

This buzzer will sound if the headlight switch is left on and the driver's door is opened with the key removed from the ignition switch.

CHECKING SERVICE REMINDER INDICATORS (except the low fuel level warning light)

1. Apply the parking brake.
2. Open one of the side doors or back door.
   The open door warning light should come on.
3. Close the door.
   The open door warning light should go off.
4. Turn the ignition key to the "ON" position, but do not start the engine.

All the service reminder indicators except the open door warning light should come on. The "ABS", "VSC" and high engine coolant temperature warning lights, "MAINT REQD" reminder light, "TRAC OFF" and slip indicator lights go off after a few seconds. The SRS warning light goes off after about 6 seconds.

If any service reminder indicator or warning buzzer does not function as described above, have it checked by your Scion dealer as soon as possible.

SECTION 1–7

OPERATION OF INSTRUMENTS AND CONTROLS

Ignition switch, Transmission and Parking brake

Ignition switch 94
Automatic transmission 95
Manual transmission 98
Traction control system 99
Vehicle stability control system 102
Parking brake 103

Ignition switch

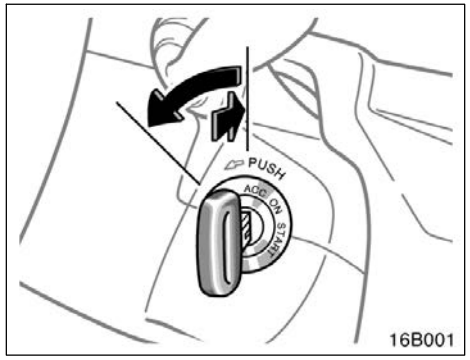

“START”—Starter motor on. The key will return to the “ON” position when released.

For starting tips, see page 152.

“ON”—Engine on and all accessories on.

This is the normal driving position.

“ACC”—Accessories such as the radio operate, but the engine is off.

If you leave the key in the “ACC” or “LOCK” position and open the driver’s door, a buzzer will remind you to remove the key.

“LOCK”—Engine is off and the steering wheel is locked. The key can be removed only at this position.

You must push in the key to turn the key from “ACC” to the “LOCK” position. On vehicles with an automatic transmission, the selector lever must be put in the “P” position before pushing the key.

When starting the engine, the key may seem stuck at the “LOCK” position. To free it, first be sure the key is pushed all the way in, and then rock the steering wheel slightly while turning the key gently.

Approximately five hours after the engine is turned off, you may hear a sound coming from underneath the luggage compartment for several minutes. This is normal operation and does not indicate a malfunction. (See “Leak detection pump” on page ix.)

⚠ CAUTION

For manual transmission:

Never remove the key when the vehicle is moving, as this will lock the steering wheel and result in loss of steering control.

NOTICE

Do not leave the key in the “ON” position if the engine is not running. The battery will discharge and the ignition could be damaged.

Automatic transmission

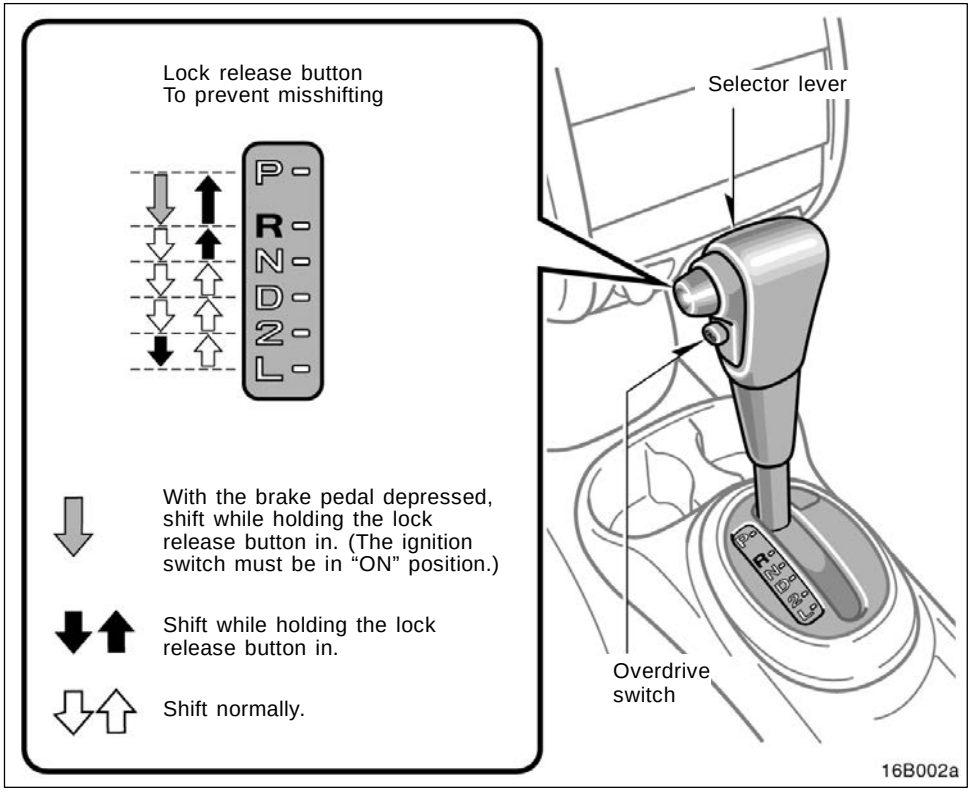

Your automatic transmission has a shift lock system to minimize the possibility of incorrect operation. This means you can only move out of “P” position when the brake pedal is depressed (with the ignition switch in “ON” position and the lock release button depressed).

(a) Selector lever

The shift position is also displayed on the instrument cluster.

P: Parking, engine starting and key removal

R: Reverse

N: Neutral

D: Normal driving (with overdrive on)

2: Stronger engine braking

L: Maximum engine braking

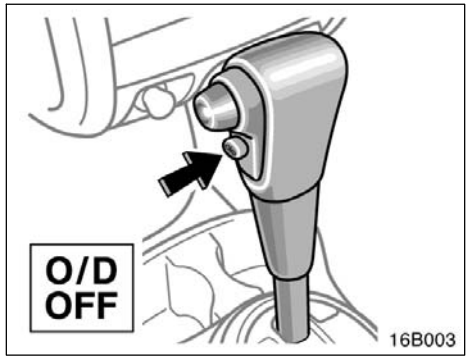

(b) Overdrive switch

You can select either third gear (with overdrive off) or fourth gear (with overdrive on) by pushing this switch.

To turn the overdrive off, push the switch. The “O/D OFF” indicator light should come on. To turn the overdrive on again, push the switch again. The “O/D OFF” indicator light should go off.

Always drive your vehicle with the overdrive on for better fuel economy and quieter driving.

If the engine is turned off when the overdrive is off and restarted, the overdrive will automatically be on.

(c) Normal driving

1. Start the engine as instructed in “How to start the engine” on page 152. The transmission must be in “P” or “N”.
2. With your foot holding down the brake pedal, shift the selector lever to “D”.

When the lever is in the “D” position, the automatic transmission system will select the most suitable gear for running conditions such as normal cruising, hill climbing, hard towing, etc.

Always turn the overdrive on for better fuel economy and quieter driving. If the engine coolant temperature is low, the transmission will not shift into overdrive gear even with the overdrive on.

⚠ CAUTION

Never put your foot on the accelerator pedal while shifting.

3. Release the parking brake and brake pedal. Depress the accelerator pedal slowly for smooth starting.

(d) Using engine braking

To use engine braking, you can downshift the transmission as follows:

- Push the overdrive switch. The “O/D OFF” indicator light will come on and the transmission will downshift to third gear.
- Shift into the “2” position. The transmission will downshift to second gear when the vehicle speed drops down to or lower than 89 km/h (55 mph), and stronger engine braking will be enabled.
- Shift into the “L” position. The transmission will downshift to first gear when the vehicle speed drops down to or lower than 44 km/h (27 mph), and maximum engine braking will be enabled.

⚠ CAUTION

Be careful when downshifting on a slippery surface. Abrupt shifting could cause the vehicle to skid or spin.

(e) Using “2” and “L” positions

The “2” and “L” positions are used for strong engine braking as described previously.

With the selector lever in “2” or “L”, you can start the vehicle in motion as with the lever in “D”.

With the selector lever in “2”, the vehicle will start in first gear and automatically shift to second gear.

With the selector lever in “L”, the transmission is engaged in first gear.

NOTICE

- ***Be careful not to over−rev the engine. The approximate maximum allowable speed for each position is given below for your reference:***

  “2” . . . . . 107 km/h (66 mph)
  “L” . . . . . 58 km/h (36 mph)

- ***Do not continue hill climbing for a long time in the “2” or “L” position. This may cause severe automatic transmission damage from overheating. To prevent such damage, “D” position should be used in hill climbing.***

(f) Backing up

1. Bring the vehicle to a complete stop.
2. With the brake pedal held down with your foot, shift the selector lever to the “R” position.

NOTICE

Never shift into reverse while the vehicle is moving.

(g) Parking

1. Bring the vehicle to a complete stop.
2. Pull the parking brake lever up fully to securely apply the parking brake.
3. With the brake pedal pressed down, shift the selector lever to the “P” position.

⚠ CAUTION

While the vehicle is moving, never attempt to move the selector lever into “P” position under any circumstances. Serious mechanical damage and loss of vehicle control may result.

(h) Good driving practice

If the transmission repeatedly shifts up and down between third gear and overdrive when climbing a gentle slope, the overdrive switch should be turned off. Be sure to turn the switch on immediately afterward.

⚠ CAUTION

Always keep your foot on the brake pedal while stopped with the engine running. This prevents the vehicle from creeping.

NOTICE

Always use the brake pedal or the parking brake to hold the vehicle on an upgrade. Do not attempt to hold the vehicle using the accelerator pedal, as this can cause the transmission to overheat.

(i) If you cannot move the selector lever out of "P" position

If you cannot shift the selector lever from "P" position even though the brake pedal is depressed, use the shift lock override button. For instructions, see "If you cannot shift automatic transmission selector lever" on page 180.

Manual transmission

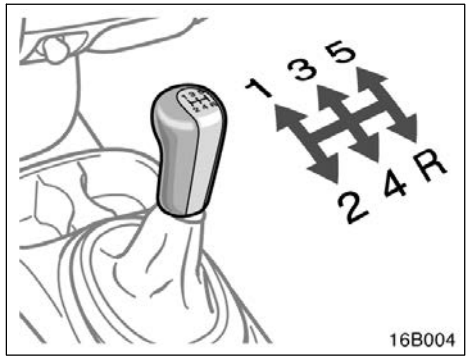

The shift pattern is conventional as shown above.

Press the clutch pedal down fully while shifting, and then release it slowly. Do not rest your foot on the pedal while driving, because it will cause clutch trouble. Do not use the clutch to hold the vehicle when stopped on an uphill grade—use the parking brake.

Recommended shifting speeds

The transmission is fully synchronized and upshifting or downshifting is easy.

For the best compromise between fuel economy and vehicle performance, you should upshift or downshift at the following speeds:

gear	km/h (mph)
1 to 2 or 2 to 1	24 (15)
2 to 3 or 3 to 2	40 (25)
3 to 4 or 4 to 3	64 (40)
4 to 5 or 5 to 4	72 (45)

Downshift to the appropriate gear if acceleration is needed when you are cruising below the above downshifting speeds.

Upshifting too soon or downshifting too late will cause lugging, and possibly pinging. Regularly revving the engine to maximum speed in each gear will cause excessive engine wear and high fuel consumption.

Maximum allowable speeds

To get on a highway or to pass slower traffic, maximum acceleration may be necessary. Make sure you observe the following maximum allowable speeds in each gear:

gear	km/h (mph)
1	47 (29)
2	88 (55)
3	128 (79)

NOTICE

Do not downshift if you are going faster than the maximum allowable speed for the next lower gear.

Good driving practice

If it is difficult to shift into reverse, put the transmission in neutral, release the clutch pedal momentarily, and then try again.

⚠ CAUTION

Be careful when downshifting on a slippery surface. Abrupt shifting could cause the vehicle to skid or spin.

NOTICE

- ***Do not use any gears other than first gear when starting off and moving forward. Doing so may damage the clutch.***
- ***Make sure the vehicle is completely stopped before shifting into reverse.***

Traction control system

The traction control system automatically helps prevent the spinning of front wheels when the vehicle is started or accelerated on slippery road surfaces.

When the ignition key is turned to “ON” position, the system automatically turns on.

⚠ CAUTION

Under certain slippery road conditions, full traction of the vehicle and power against front wheels cannot be maintained, even though the traction control system is in operation. Do not drive the vehicle under any speed or maneuvering conditions which may cause the vehicle to lose traction control. In situations where the road surface is covered with ice or snow, your vehicle should be fitted with snow tires or tire chains. Always drive at an appropriate and cautious speed for the present road conditions.

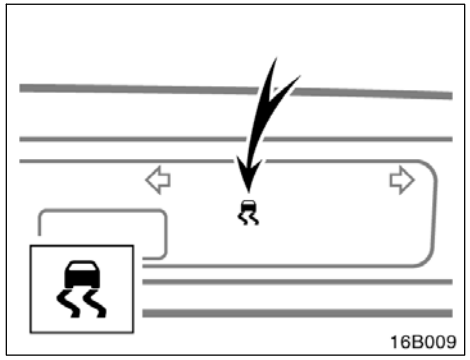

NORMAL DRIVING MODE

Leave the system on during the ordinary driving so that it can operate when needed.

You may hear a sound in the engine compartment for a few seconds just after the vehicle begins to move. This means that the traction control system is in the self–check mode, but does not indicate a malfunction.

When the traction control system is operating, the following conditions occur:

- The system controls the spinning of the front wheels. At this time, the slip indicator light blinks.
- You may feel vibration or noise in your vehicle, caused by operation of the brakes. This indicates the system is functioning properly.

The slip indicator light comes on for a few seconds when the ignition key is turned to “ON” position. If the indicator light does not come on when the ignition is turned on, contact your Scion dealer.

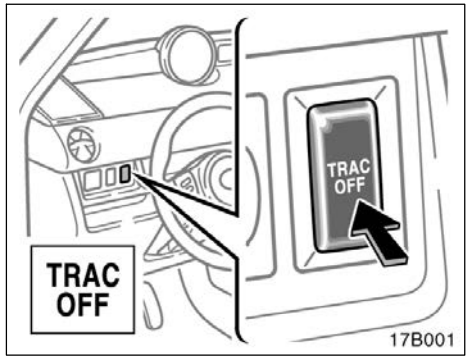

TRACTION CONTROL OFF MODE

When getting the vehicle out of mud or newly fallen snow, etc., turn off the traction control system. This system that controls engine performance interferes with the process of freeing your wheels.

To turn off: Push “TRAC OFF” switch.

The “TRAC OFF” indicator light will come on.

The vehicle stability control system is always activated, even if the traction control system is turned off.

To turn on: Push “TRAC OFF” switch once again.

The “TRAC OFF” indicator light will go off.

“TRAC OFF” indicator light comes on for a few seconds when the ignition key is turned to “ON” position. It will come on again when you push the “TRAC OFF” switch to turn off the system.

In the following cases, contact your Scion dealer:

- When the ignition key is turned to “ON” position, the light does not come on or remains on.
- The indicator light comes on with the normal driving mode while driving.

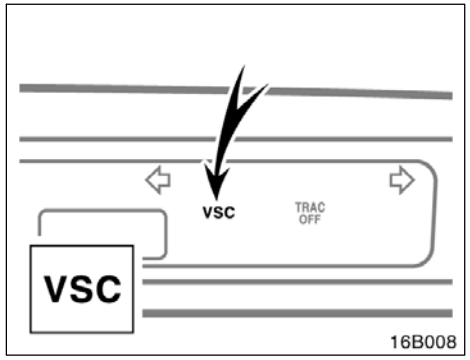

“VSC” warning light

This light warns that there is a problem somewhere in the traction control system or the vehicle stability control system.

The light will come on when the ignition key is turned to “ON” position and will go off after a few seconds.

If the light comes on while driving, the traction control system and vehicle stability control system do not work. However, as conventional braking operates when applied, there is no problem to continue your driving.

In the following cases, contact your Scion dealer:

- When the ignition key is turned to “ON” position, the light does not come on or remains on.
- The warning light comes on while driving.

The “TRAC OFF” indicator light will come on when the “VSC” warning light comes on even if the “TRAC OFF” switch is not pushed.

Vehicle stability control system

The vehicle stability control system helps provide integrated control of the systems such as an anti–lock brake system, traction control, engine control, etc. This system automatically controls the brakes and engine to help prevent the vehicle from skidding when cornering on a slippery road surface or operating steering wheel abruptly.

The vehicle stability control system is activated when the vehicle speed is about more than 15 km/h (9 mph).

You may hear a sound in the engine compartment for a few seconds just after the vehicle begins to move. This means that the system is in the self–check mode, but does not indicate a malfunction.

CAUTION

- **Do not rely excessively on the vehicle stability control system. Even if the vehicle stability control system is operating, you must always drive carefully and attentively to avoid serious injury. Reckless driving will result in an accident. If the slip indicator light flashes, sounding an alarm, special care should be taken while driving.**
- **Only use tires of specified size. The size, manufacturer, brand and tread pattern for all 4 tires should be the same. If you use the tires other than specified, or different type or size, the vehicle stability control system may not function correctly. When replacing the tires or wheels, contact your Scion dealer. (See “Checking and replacing tires” on page 211.)**
- **In situations where the road surface is covered with ice or snow, your vehicle should be fitted with snow tires or tire chains.**

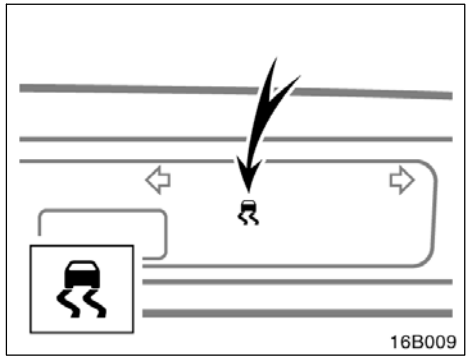

If the vehicle is going to skid during driving, the slip indicator light blinks and an alarm sounds intermittently. Special care should be taken while driving.

The slip indicator light comes on for a few seconds when the ignition key is turned to “ON” position. If the indicator light does not come on when the ignition is turned on, contact your Scion dealer.

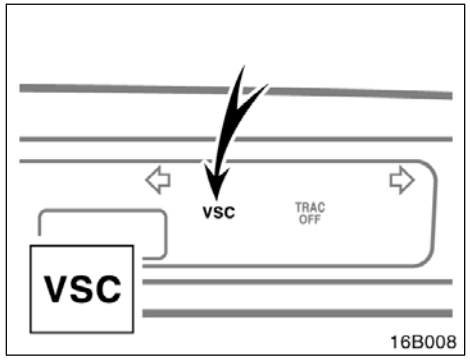

“VSC” warning light

This light warns that there is a problem somewhere in the vehicle stability control system or the traction control system.

The light will come on when the ignition key is turned to “ON” position and will go off after a few seconds.

If the light comes on while driving, the vehicle stability control system and traction control system do not work. However, as conventional braking operates when applied, there is no problem to continue your driving.

In the following cases, contact your Scion dealer:

- When the ignition key is turned to “ON” position, the light does not come on or remains on.
- The warning light comes on while driving.

The “TRAC OFF” indicator light will come on when the “VSC” warning light comes on even if the “TRAC OFF” switch is not pushed.

Parking brake

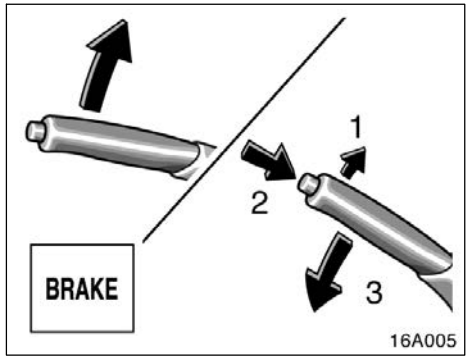

When parking, firmly apply the parking brake to avoid inadvertent creeping.

To set: Pull up the lever. For better holding power, first depress the brake pedal and hold it while setting the parking brake.
To release: Pull up the lever slightly (1), press the lock release button (2), and lower (3).

To remind you that the parking brake is set, the parking brake reminder light in the instrument cluster remains on until you release the parking brake.

⚠ CAUTION

Before driving, be sure the parking brake is fully released and the parking brake reminder light is off.

SECTION 1–8

OPERATION OF INSTRUMENTS AND CONTROLS

Air conditioning system

Controls 106
Air flow selector settings 109
Operating tips 109
Side vents 111
Air conditioning filters 112

Controls

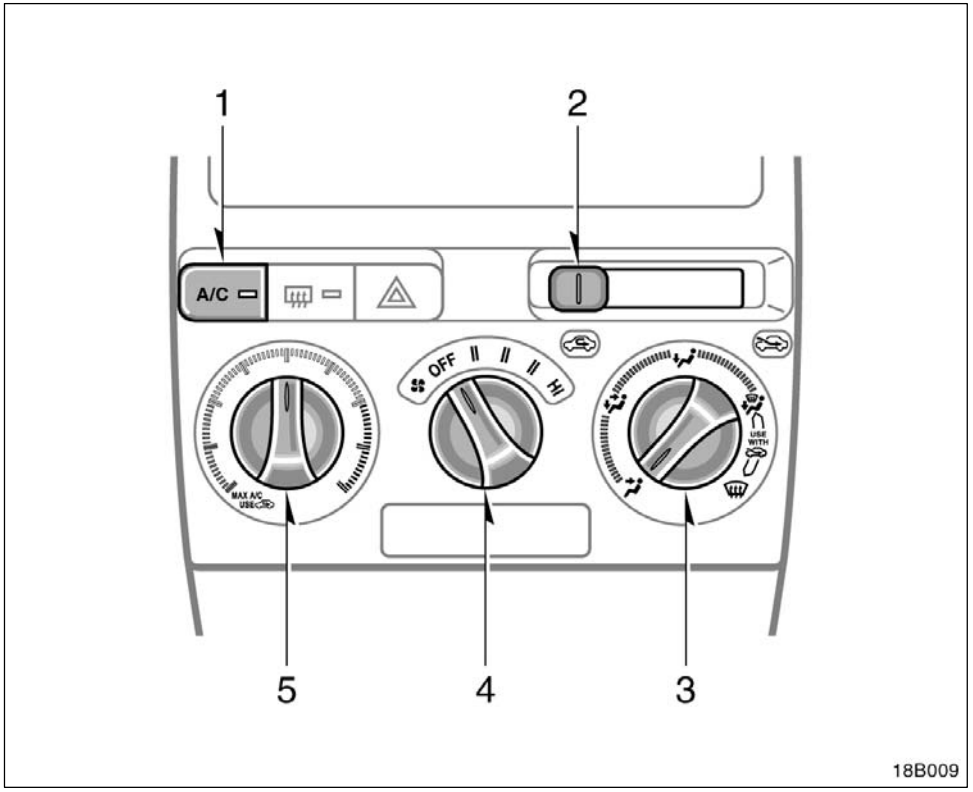

1. “A/C” button
2. Air intake selector
3. Air flow selector
4. Fan speed selector
5. Temperature selector

Fan speed selector

Turn the knob to adjust the fan speed—to the right to increase, to the left to decrease.

Temperature selector

Turn the knob to adjust the temperature—to the right to warm, to the left to cool.

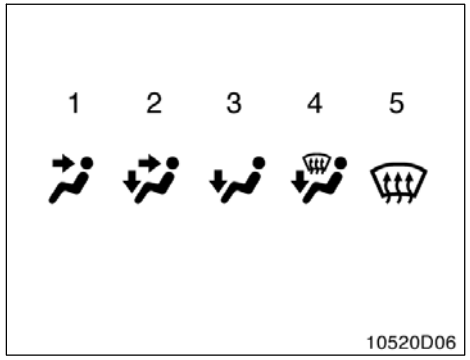

Air flow selector

Turn the knob to select the vents used for air flow.

1. **Panel—**Air flows mainly from the instrument panel vents.
2. **Bi−level—**Air flows from both the floor vents and the instrument panel vents.
3. **Floor—**Air flows mainly from the floor vents.
4. **Floor/Windshield—**Air flows mainly from the floor vents and windshield vents.

   Use with the air intake selector positioned in FRESH.
5. **Windshield—**Air flows mainly from the windshield vents.

   Use with the air intake selector positioned in FRESH.

For details about air flow selector settings, see “Air flow selector settings” described below.

Turning the air flow control knob to windshield position turns on the defroster–linked air conditioning. This is to clean up the front view more quickly.

When the “A/C” button is not pressed in, turning the air flow control knob to another position turns off the air conditioning.

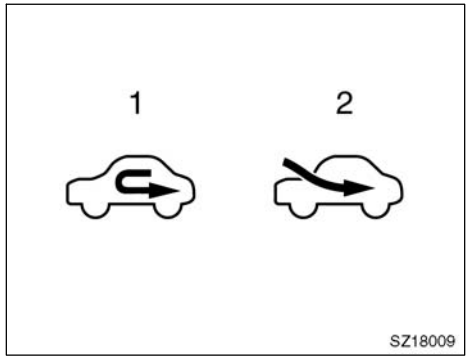

Air intake selector

Move the lever to select the air source.

1. **Recirculate—**Recirculates the air inside the vehicle.
2. **Fresh—**Draws outside air into the system.

“A/C” button

To turn on the air conditioning, press the “A/C” button. The “A/C” button indicator will come on. To turn the air conditioning off, press the button again.

Air flow selector settings

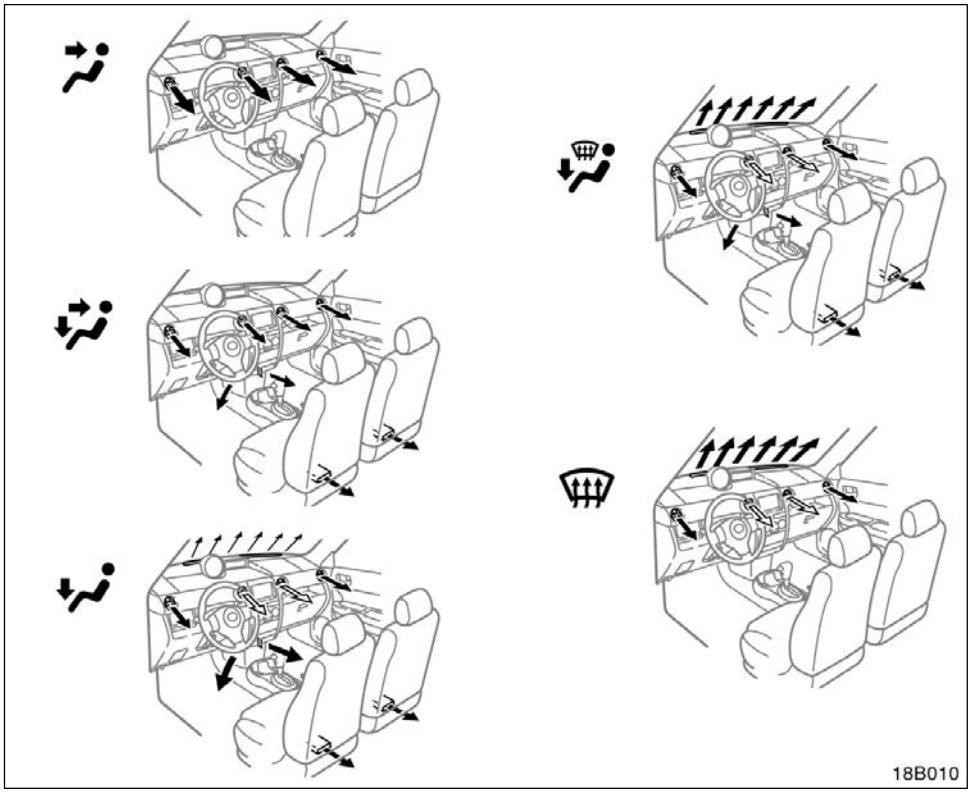

⇨ : When turning the temperature selector fully to the left position, cold air comes out from the center vents regardless of the position of the air flow selector.

Operating tips

- To cool off your Scion after it has been parked in the hot sun, drive with the windows open for a few minutes. This vents the hot air, allowing the air conditioning to cool the interior more quickly.
- Make sure the air intake grilles in front of the windshield are not blocked (by leaves or snow, for example).
- On humid days, do not blow cold air on the windshield. The windshield could fog up because of the difference in air temperature on the inside and outside of the windshield.
- Keep the area under the front seats clear to allow air to circulate throughout the vehicle.
- On cold days, set the fan speed to “high” for a minute to help clear the intake ducts of snow or moisture. This can reduce the amount of fogging on the windows.

- When driving on dusty roads, close all windows. If dust thrown up by the vehicle is still drawn into the vehicle after closing the windows, it is recommended that the air intake selector be set to FRESH and the fan speed selector to any setting except “OFF”.
- If following another vehicle on a dusty road, or driving in windy and dusty conditions, it is recommended that the air intake selector be temporarily set to RECIRCULATED, which will close off the outside passage and prevent outside air and dust from entering the vehicle interior.

Heating

For best results, set controls to:

Fan speed—Any setting except “OFF”
Temperature—Towards red zone
Air intake—FRESH (outside air)
Air flow—FLOOR
Air conditioning—OFF

- For quick heating, select recirculated air for a few minutes. To keep the windows from fogging, select fresh after the vehicle interior has been warmed.
- Press the “A/C” button on for dehumidified heating.
- Choose floor/windshield air flow to heat the vehicle interior while defrosting or defogging the windshield.

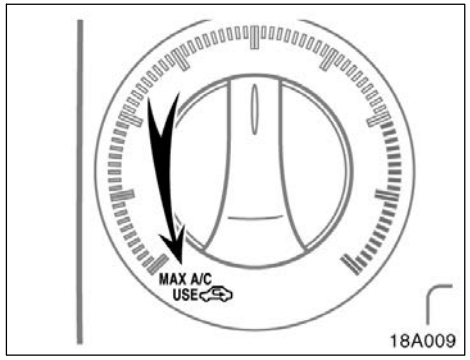

Air conditioning

For best results, set controls to:

Fan speed—Any setting except “OFF”
Temperature—Towards blue zone
Air intake—FRESH (outside air)
Air flow—PANEL
Air conditioning—ON

- For quick cooling, turn the temperature selector knob fully towards COLD and change the air intake selector mode RECIRCULATE.

Ventilation

For best results, set controls to:

Fan speed—Any setting except “OFF”
Temperature—Towards blue zone
Air intake—FRESH (outside air)
Air flow—PANEL
Air conditioning—OFF

Defogging

The inside of the windshield

For best results, set controls to:

Fan speed—Any setting except “OFF”
Temperature— Towards red zone to heat; blue zone to cool
Air intake—FRESH (outside air)
Air flow—WINDSHIELD

- On humid days, do not blow cold air on the windshield—the difference between the outside and inside temperatures could make the fogging worse.

Defrosting

The outside of the windshield

For best results, set controls to:

Fan speed—Any setting except “OFF”
Temperature—Towards red zone
Air intake—FRESH (outside air)
Air flow—WINDSHIELD

- To heat the vehicle interior while defrosting the windshield, choose floor/windshield air flow.

Side vents

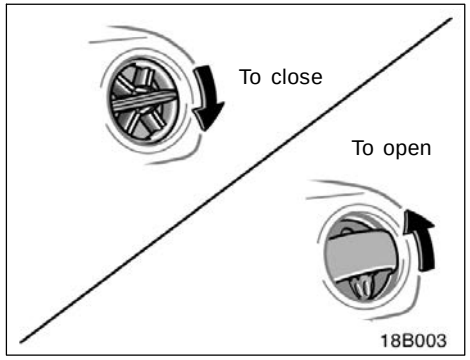

If air flow control is not satisfactory, check the side vents. The side vents may be opened or closed as shown.

Air conditioning filters (on some models)—

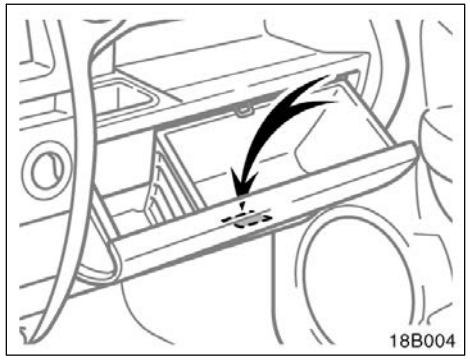

The air conditioning filter information label is placed on the inside of the glove box as shown and indicates that the filters have been installed.

The air conditioning filters prevent dust from entering the vehicle through the air conditioning vent.

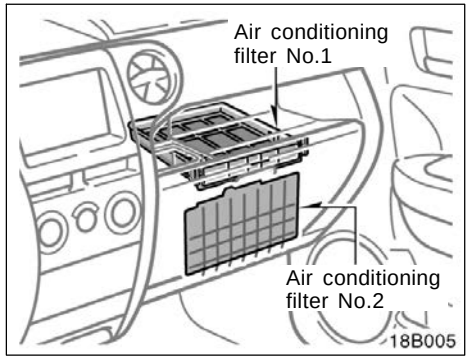

This air conditioning system has a high efficient air refiner filter which helps eliminate dust and pollen, thereby increasing your driving comfort.

The air conditioning filters are behind the glove box.

—Checking and cleaning the air conditioning filters

The air conditioning filters may clog after long use. The filters may need to be replaced if the air flow of the air conditioning and heater experiences extreme reductions in operating efficiency, or if the windows become to fog up easily in FRESH mode.

To maintain the air conditioning efficiency, clean the air conditioning filters according to the maintenance schedule. In dusty areas or areas with heavy traffic flow, such as inner city or desert areas, early replacement may be required. (For scheduled maintenance information, please refer to the “Scheduled Maintenance Guide” or “Owner’s Manual Supplement”.)

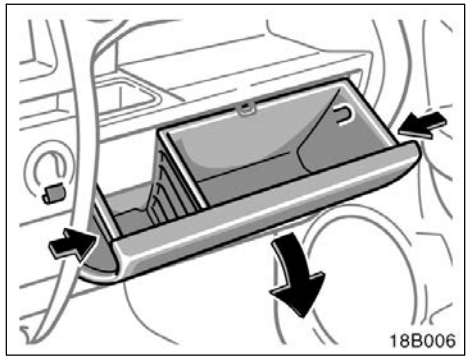

REMOVAL METHOD:

1. **Remove the glove box from the instrument panel.**

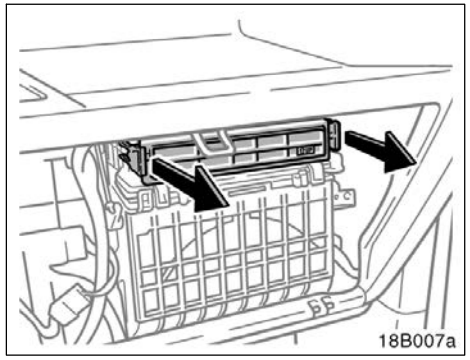

2. **Pull out the air conditioning filter case as shown in the illustration.**

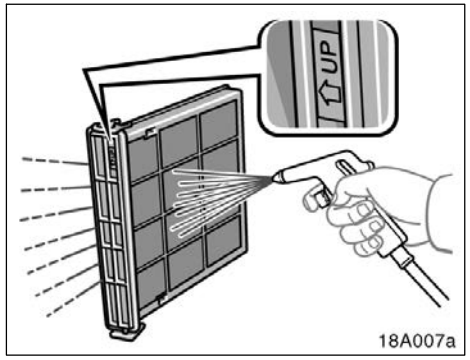

CLEANING METHOD:
Clean the filter No.1.

If the filter is dirty, clean by blowing compressed air through the filter from the downward side.

Hold the air gun 5 cm (2 in.) from the filter and blow for approximately 2 minutes at 500 kPa (5.0 kgf/cm^2 or bar, 72 psi).

If it is not available, have the filter cleaned by your Scion dealer.

NOTICE
When cleaning the filter, do not clean the filter with water.

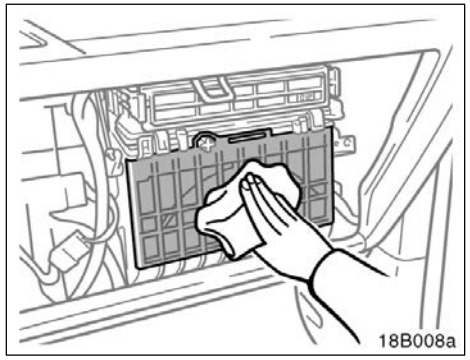

Clean the filter No.2.

Clean the surface of the filter No.2 using a moist cloth.

If it is dirty or torn, it should be replaced.

INFORMATION

Frequency of the cleaning varies depending on road conditions (dusty road, etc.). Earlier cleaning is recommended.

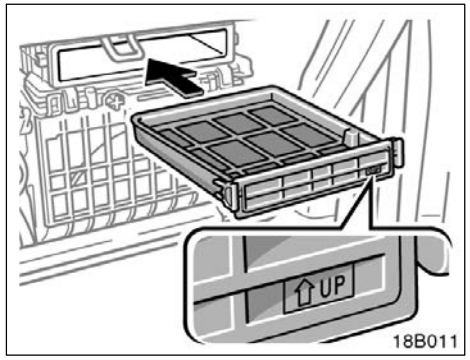

REPLACEMENT METHOD:

When inserting the filter in the filter outlet, keep the "↑ UP" mark pointing up.

INFORMATION

The air filters should be installed properly in position. The use of air conditioning with the air filters removed may cause deteriorated dust-proof performance and then affect air conditioning performance.

SECTION 1–9

OPERATION OF INSTRUMENTS AND CONTROLS

Other equipment

Clock 116
Cigarette lighter and ashtray 116
Audio remote controls (steering switches) 117
AUX adapter 117
Glove box 118
Auxiliary box 118
Cup holders 119
Grocery bag hooks 119
Cargo net hooks 120
Luggage storage box 120
Floor mat 120

Clock

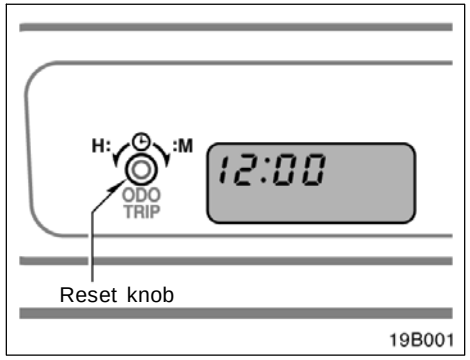

To reset the hour: Turn the knob counterclockwise.
To reset the minutes: Turn the knob clockwise.

The key must be in the “ON” position.

If the electrical power source has been disconnected from the clock, the time display will automatically be set to 1:00.

When the instrument panel lights are turned on, the brightness of the time indication will be reduced.

Cigarette lighter and ashtray

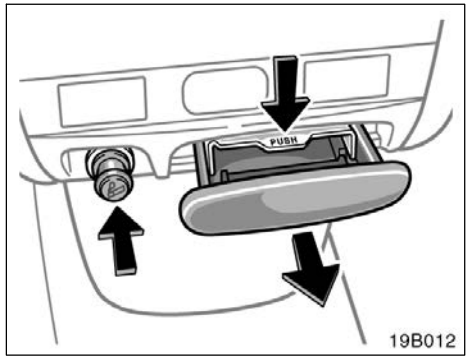

CIGARETTE LIGHTER

To use the cigarette lighter, press it in. After it finishes heating up, it automatically pops out ready for use.

If the engine is not running, the key must be in the “ACC” position to use the lighter.

Do not hold the cigarette lighter pressed in.

Use a genuine cigarette lighter or equivalent for replacement.

ASHTRAY

To use the ashtray, pull it out.

When finished with your cigarette, thoroughly extinguish it in the ashtray to prevent other cigarette butts from catching fire. After using the ashtray, close the lid completely.

To remove the ashtray, press down on the lock spring plate and pull out.

⚠ CAUTION

To reduce the chance of injury in case of an accident or sudden stop while driving, always completely close the ashtray after use.

Audio remote controls (steering switches)

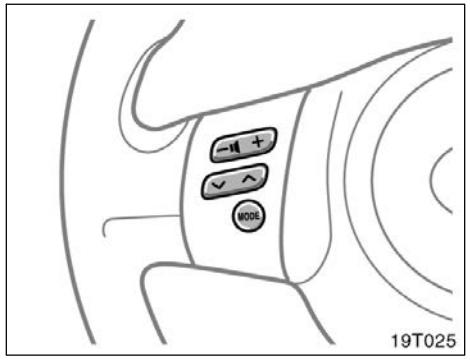

Steering switches are installed on the left side of the steering wheel.

You can use these switches to operate the audio volume control, radio, CD player and so on.

For more detailed information, see the separate “SCION Audio System Owner’s Manual”.

⚠ CAUTION

Operate the switches with due care while you are driving to avoid accidents.

AUX adapter

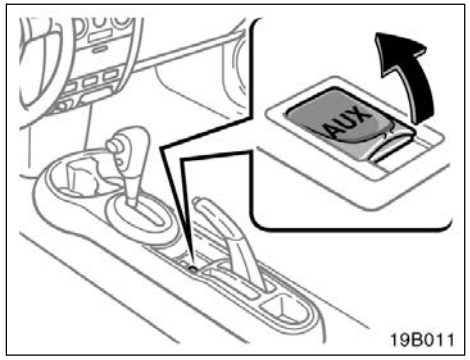

An AUX adapter is located as shown.

By inserting a mini plug into the AUX adapter, you can listen to music from a portable audio device through the vehicle’s speaker system.

When using a portable audio device connected to the cigarette lighter, noise may occur during playback. If this happens, use the power source of the portable audio device.

If you install an audio system other than a genuine audio system, you will not be able to use the AUX adapter.

For more detailed information, see the separate “SCION Audio System Owner’s Manual”.

⚠ CAUTION

When using the AUX adapter, observe the following instructions. Failure to do so could result in accident or injury.

- **Take care that the portable audio device or cords do not hinder vehicle operation.**
- **Do not adjust the audio device while driving.**

Glove box

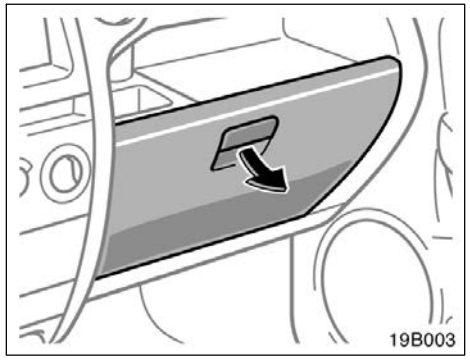

To open the glove box door, pull the lever.

⚠ CAUTION

To reduce the chance of injury in case of an accident or a sudden stop, always keep the glove box door closed while driving.

Auxiliary box

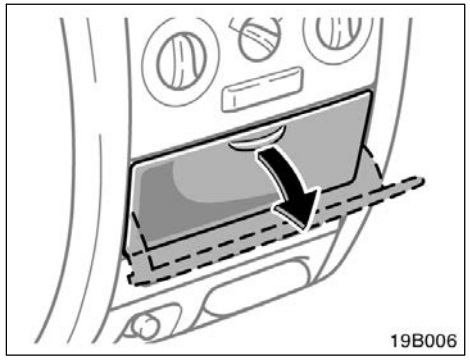

To use the box, pull on the handle.

You can find the card holder on the back side of the box lid.

⚠ CAUTION

- **To reduce the chance of injury in case of an accident or a sudden stop, always keep the auxiliary box closed while driving.**
- **Do not use the auxiliary box as an ashtray.**

NOTICE

During hot weather, the interior of the vehicle becomes very hot. Do not leave anything flammable or deformable such as a lighter, glasses, etc. inside.

Cup holders

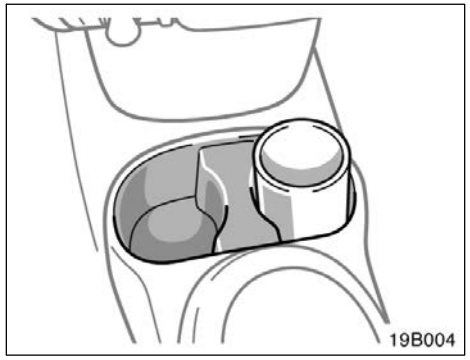

Front

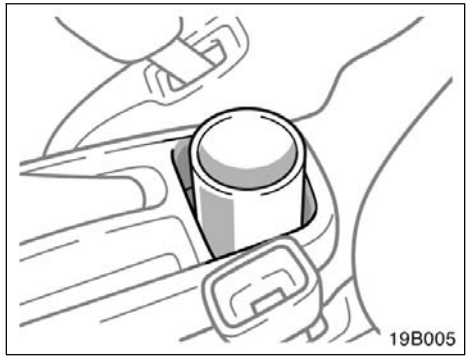

Rear

The cup holder is designed for holding cups or drink–cans securely in its holes.

⚠ CAUTION

Do not place anything else other than cups or drink–cans in the cup holder, as such items may be thrown about and possibly injure people in the vehicle during sudden braking or in an accident.

Grocery bag hooks

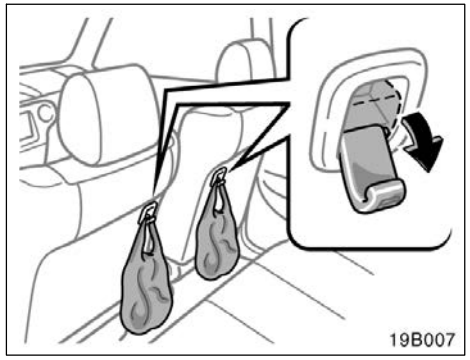

These hooks are designed to hang things like grocery bags.

To use the hook, pull it down.

NOTICE

To prevent damage to the hook, do not hang any object heavier than 4 kg (8.8 lb.) on it.

Cargo net hooks

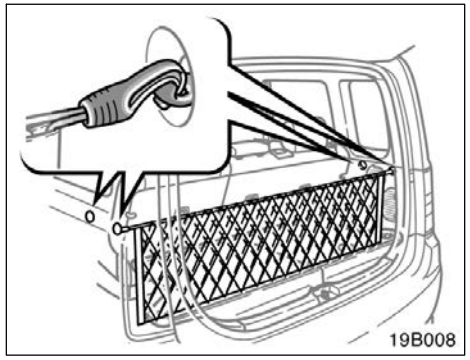

These hooks are designed to hang cargo net.

Although the cargo net itself is not included as an original equipment, these hooks can be used to hang the cargo net.

NOTICE
To prevent damage to the hooks, avoid hanging things other than a cargo net on them and keep them retracted when not in use.

Luggage storage box

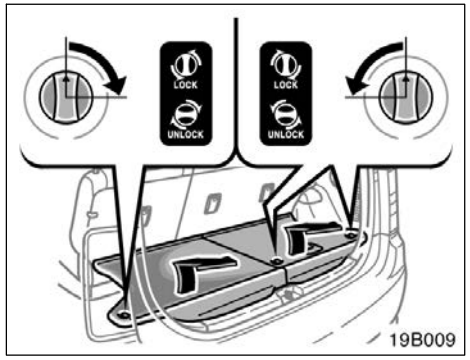

To open the luggage storage box, turn the knobs to the "UNLOCK" position and open the lid. To close the luggage storage box, lower the lid and turn the knobs to the "LOCK" position.

⚠ CAUTION
To reduce the chance of injury in case of an accident or a sudden stop, always keep the luggage storage box closed and locked while driving.

Floor mat

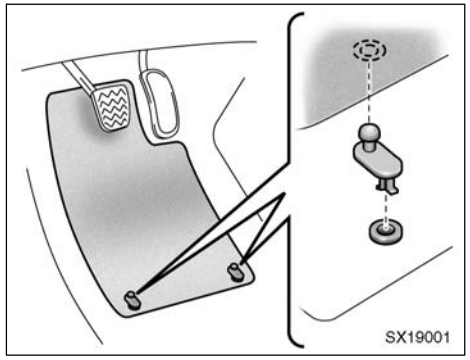

Use a floor mat of the correct size.

If the vehicle carpet and floor mat have 2 holes, then they are designed for use with locking clips. Attach the floor mat to the vehicle carpet using the clips. Lock the clips into the holes in the vehicle carpet.

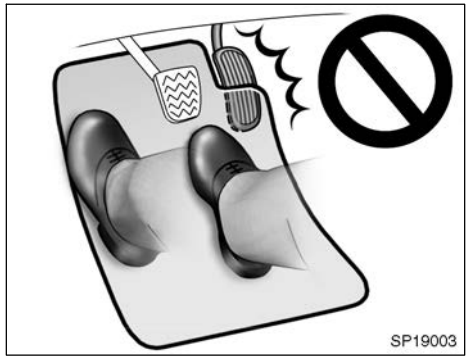

⚠ CAUTION

Make sure the floor mat is properly placed on the vehicle carpet. If the floor mat slips and interferes with the movement of the pedals during driving, it may cause an accident.

SECTION 2

INFORMATION BEFORE DRIVING YOUR SCION

Information before driving your Scion

Break–in periodd 124
Fuel 124
Operation in foreign countries 126
Three–way catalytic converter 126
Engine exhaust cautions 127
Facts about engine oil consumption 128
Brake system 129
Brake pad wear limit indicators 133
Your Scion's identification 133
Theft prevention labels 134
Suspension and chassis 134
Tire information 135
Vehicle load limits 145
Cargo and luggage 146
Types of tires 148

Break–in period

Drive gently and avoid high speeds.

Your vehicle does not need an elaborate break–in. But following a few simple tips for the first 1600 km (1000 miles) can add to the future economy and long life of your vehicle:

- Avoid full throttle acceleration when starting and driving.
- Avoid racing the engine.
- Try to avoid hard stops during the first 300 km (200 miles).
- Do not drive slowly with the manual transmission in a high gear.
- Do not drive for a long time at any single speed, either fast or slow.

Fuel

FUEL TYPE

Your new vehicle must use only unleaded gasoline.

To help prevent gas station mix–ups, your Scion has a smaller fuel tank opening. The special nozzle on pumps with unleaded fuel will fit it, but the larger standard nozzle on pumps with leaded gas will not.

At a minimum, the gasoline you use should meet specifications of ASTM D4814 in the U.S.A. and CGSB 3.5–M93 in Canada.

NOTICE

Do not use leaded gasoline. Use of leaded gasoline will cause the three–way catalytic converter to lose its effectiveness and the emission control system to function improperly. Also, this can increase maintenance costs.

OCTANE RATING

Select Octane Rating 87 (Research Octane Number 91) or higher.

Use of unleaded fuel with an octane rating lower than 87 may result in engine knocking. Persistent knocking can lead to engine damage.

If your engine knocks...

If you detect heavy knocking even when using the recommended fuel, or if you hear steady knocking while holding a steady speed on level roads, consult your Scion dealer.

However, occasionally, you may notice light knocking for a short time while accelerating or driving up hills. This is normal and there is no need for concern.

GASOLINES CONTAINING DETERGENT ADDITIVES

Scion recommends the use of gasoline that contain detergent additives to avoid build–up of engine deposits.

However, all gasoline sold in the U.S. contains detergent additives to keep clean and/or clean intake systems.

QUALITY GASOLINE

Automotive manufacturers in the U.S., Europe and Japan have developed a specification for quality fuel named World–Wide Fuel Charter (WWFC) that is expected to be applied worldwide. The WWFC consists of four categories that depend on required emission levels. In the U.S., category 3 has been adopted. The WWFC improves air quality by providing for better emissions in vehicle fleets, and customer satisfaction through better vehicle performance.

CLEANER BURNING GASOLINE

Cleaner burning gasoline, including reformulated gasoline that contains oxygenates such as ethanol or MTBE is available in many areas.

Scion recommends the use of cleaner burning gasoline and appropriately blended reformulated gasoline. These types of gasoline provide excellent vehicle performance, reduce vehicle emissions, and improve air quality.

OXYGENATES IN GASOLINE

Scion allows the use of oxygenate blended gasoline where the oxygenate content is up to 10% ethanol or 15% MTBE. If you use gasohol in your Scion, be sure that it has an octane rating no lower than 87.

Scion does not recommend the use of gasoline containing methanol.

GASOLINE CONTAINING MMT

Some gasoline contains an octane enhancing additive called MMT (Methylcycropentadienyl Manganese Tricarbonyl).

Scion does not recommend the use of gasoline that contains MMT. If fuel containing MMT is used, your emission control system may be adversely affected. The Malfunction Indicator Lamp on the instrument cluster may come on. If this happens, contact your Scion dealer for service.

GASOLINE QUALITY

In a very few cases, you may experience drivability problems caused by the particular gasoline that you are using. If you continue to have unacceptable drivability, try changing gasoline brands. If this does not rectify your problem, then consult your Scion dealer.

NOTICE

- ***Do not use gasohol other than stated above. It will cause fuel system damage or vehicle performance problems.***
- ***If drivability problems are encountered (poor hot starting, vaporizing, engine knock, etc.), discontinue the use.***
- ***Take care not to spill gasohol during refueling. Gasohol may cause paint damage.***

FUEL TANK CAPACITY

45 L (11.9 gal., 9.9 Imp.gal.)

Operation in foreign countries

If you plan to drive your Scion in another country...

First, comply with the vehicle registration laws.

Second, confirm the availability of the correct fuel (unleaded and minimum octane number).

Three−way catalytic converter

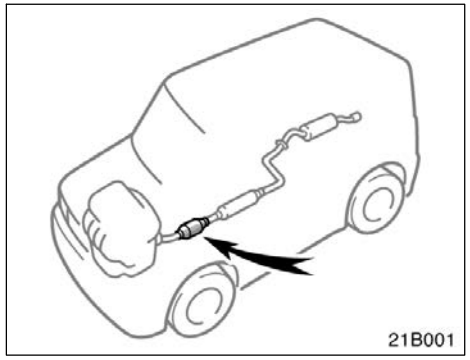

The three−way catalytic converter is an emission control device installed in the exhaust system.

The purpose is to reduce pollutants in the exhaust gas.

⚠ CAUTION

- **Keep people and combustible materials away from the exhaust pipe while the engine is running. The exhaust gas is very hot.**
- **Do not drive, idle or park your vehicle over anything that might burn easily such as grass, leaves, paper or rags.**

NOTICE

A large amount of unburned gases flowing into the three−way catalytic converter may cause it to overheat and create a fire hazard. To prevent this and other damage, observe the following precautions:

- *Use only unleaded gasoline.*
- *Do not drive with an extremely low fuel level; running out of fuel could cause the engine to misfire, creating an excessive load on the three−way catalytic converter.*
- *Do not allow the engine to run at idle speed for more than 20 minutes.*
- *Avoid racing the engine.*
- *Do not push−start or pull−start your vehicle.*
- *Do not turn off the ignition while the vehicle is moving.*
- *Keep your engine in good running order. Malfunctions in the engine electrical system, electronic ignition system/distributor ignition system or fuel system could cause an extremely high three−way catalytic converter temperature.*
- *If the engine becomes difficult to start or stalls frequently, take your vehicle in for a check−up as soon as possible. Remember, your Scion dealer knows your vehicle and its three−way catalytic converter system best.*
- *To ensure that the three−way catalytic converter and the entire emission control system operate properly, your vehicle must receive the periodic inspections required by the Scion Maintenance Schedule. For scheduled maintenance information, refer to the "Scheduled Maintenance Guide" or "Owner's Manual Supplement".*

Engine exhaust cautions

⚠ CAUTION

- **Avoid inhaling the engine exhaust. It contains carbon monoxide, which is a colorless and odorless gas. It can cause unconsciousness or even death.**
- **Make sure the exhaust system has no holes or loose connections. The system should be checked from time to time. If you hit something, or notice a change in the sound of the exhaust, have the system checked immediately.**
- **Do not run the engine in a garage or enclosed area except for the time needed to drive the vehicle in or out. The exhaust gases cannot escape, making this a particularly dangerous situation.**
- **Do not remain for a long time in a parked vehicle with the engine running. If it is unavoidable, however, do so only in an unconfined area and adjust the heating or cooling system to force outside air into the vehicle.**

- **Keep the back door closed while driving. An open or unsealed back door may cause exhaust gases to be drawn into the vehicle.**
- **To allow proper operation of your vehicle's ventilation system, keep the inlet grilles in front of the windshield clear of snow, leaves, or other obstructions.**
- **If you smell exhaust fumes in the vehicle, open the windows and close the back door to ensure plenty of fresh air enters the vehicle. If you can smell exhaust fumes even though there are no other vehicles in the surrounding area, have your vehicle checked by your Scion dealer. Continued inhalation of exhaust fumes can lead to death by gas poisoning.**

Facts about engine oil consumption

FUNCTIONS OF ENGINE OIL

Engine oil has the primary functions of lubricating and cooling the inside of the engine, and plays a major role in maintaining the engine in proper working order.

ENGINE OIL CONSUMPTION

It is normal that an engine should consume some engine oil during normal engine operation. The causes of oil consumption in a normal engine are as follows.

- Oil is used to lubricate pistons, piston rings and cylinders. A thin film of oil is left on the cylinder wall when a piston moves downwards in the cylinder. High negative pressure generated when the vehicle is decelerating sucks some of this oil into the combustion chamber. This oil as well as some part of the oil film left on the cylinder wall is burned by the high temperature combustion gases during the combustion process.
- Oil is also used to lubricate the stems of the intake valves. Some of this oil is sucked into the combustion chamber together with the intake air and is burned along with the fuel. High temperature exhaust gases also burn the oil used to lubricate the exhaust valve stems.

The amount of engine oil consumed depends on the viscosity of the oil, the quality of the oil and the conditions the vehicle is driven.

More oil is consumed by high–speed driving and frequent acceleration and deceleration.

A new engine consumes more oil, since its pistons, piston rings and cylinder walls have not become conditioned.

Oil consumption: Max. 1.0 L per 1000 km (1.1 qt./600 miles, 0.9 Imp.qt./600 miles)

When judging the amount of oil consumption, note that the oil may become diluted and make it difficult to judge the true level accurately.

As an example, if a vehicle is used for repeated short trips, and consumes a normal amount of oil, the dipstick may not show any drop in the oil level at all, even after 1000 km (600 miles) or more. This is because the oil is gradually becoming diluted with fuel or moisture, making it appear that the oil level has not changed.

The diluting ingredients evaporate out when the vehicle is then driven at high speeds, as on an express way, making it appear that oil is excessively consumed after driving at high speeds.

IMPORTANCE OF ENGINE OIL LEVEL CHECK

One of the most important points in proper vehicle maintenance is to keep the engine oil at the optimum level so that oil function will not be impaired. Therefore, it is essential that the oil level be checked regularly. Scion recommends that the oil level be checked every time you refuel the vehicle.

NOTICE

Failure to check the oil level regularly could lead to serious engine trouble due to insufficient oil.

For detailed information on oil level check, see “Checking the engine oil level” on page 204.

Brake system

The tandem master cylinder brake system is a hydraulic system with two separate sub–systems. If either sub–system should fail, the other will still work. However, the pedal will be harder to press, and your stopping distance will increase. Also, the brake system warning light may come on.

⚠ CAUTION

Do not drive your vehicle with only a single brake system. Have your brakes fixed immediately.

BRAKE BOOSTER

The brake booster uses engine vacuum to power–assist the brakes. If the engine should quit while you are driving, you can bring the vehicle to a stop with normal pedal pressure. There is enough reserved vacuum for one or two stops but no more!

⚠ CAUTION

- **Do not pump the brake pedal if the engine stalls. Each push on the pedal uses up your reserved vacuum.**
- **Even if the power assist is completely lost, the brakes will still work. But you will have to push the pedal hard, much harder than normal. And your braking distance will increase.**

ANTI–LOCK BRAKE SYSTEM

The anti–lock brake system is designed to automatically help prevent lock–up of the wheels during a sudden braking or braking on slippery road surfaces. This assists in providing directional stability and steering performance of the vehicle under these circumstances.

Effective way to press the ABS brake pedal:
When the anti–lock brake system function is in action, you may feel the brake pedal pulsating and hear a noise. In this situation, to let the anti–lock brake system work for you, just hold the brake pedal down more firmly. Do not pump the brake in a panic stop. This will result in reduced braking performance.

The anti–lock brake system becomes operative after the vehicle has accelerated to a speed in excess of approximately 10 km/h (6 mph). It stops operating when the vehicle decelerates to a speed below approximately 5 km/h (3 mph).

Depressing the brake pedal on slippery road surfaces such as on a manhole cover, a steel plate at a construction site, joints in a bridge, etc. on a rainy day tends to activate the anti–lock brake system.

You may hear a click or motor sound in the engine compartment for a few seconds when the engine is started or just after the vehicle begins to move. This means that the anti–lock brake system is in the self–check mode, and does not indicate a malfunction.

When the anti–lock brake system is activated, the following conditions may occur. They do not indicate a malfunction of the system:

- You may hear the anti–lock brake system operating and feel the brake pedal pulsating and the vibrations of the vehicle body and steering wheel. You may also hear the motor sound in the engine compartment even after the vehicle is stopped.
- At the end of the anti–lock brake system activation, the brake pedal may move a little forward.

⚠ CAUTION

Do not overestimate the anti–lock brake system: Although the anti–lock brake system assists in providing vehicle control, it is still important to drive with all due care and maintain a moderate speed and safe distance from the vehicle in front of you, because there are limits to the vehicle stability and effectiveness of steering wheel operation even with the anti–lock brake system on.

If tire grip performance exceeds its capability, or if hydroplaning occurs during high speed driving in the rain, the anti–lock brake system does not provide vehicle control.

Anti–lock brake system is not designed to shorten the stopping distance: Always drive at a moderate speed and maintain a safe distance from the vehicle in front of you. Compared with vehicles without an anti–lock brake system, your vehicle may require a longer stopping distance in the following cases:

- **Driving on rough, gravel or snow–covered roads.**
- **Driving with tire chains installed.**
- **Driving over the steps such as the joints on the road.**
- **Driving on roads where the road surface is pitted or has other differences in surface height.**

Install all 4 tires of specified size at appropriate pressure: The anti–lock brake system detects vehicle speeds using the speed sensors for respective wheels' turning speeds. The use of tires other than specified may fail to detect the accurate turning speed resulting in a longer stopping distance.

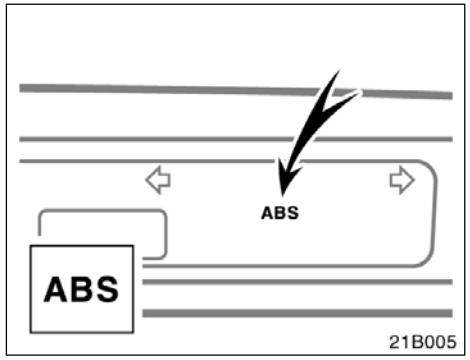

"ABS" warning light

This light comes on when the ignition key is turned to the "ON" position. If the anti–lock brake system works properly, the light turns off after a few seconds. Thereafter, if the system malfunctions, the light comes on again.

When the "ABS" warning light is on (and the brake system warning light is off), the anti–lock brake system, the brake assist system, the traction control system and the vehicle stability control system do not operate, but the brake system still operates conventionally.

When the “ABS” warning light is on (and the brake system warning light is off), the anti–lock brake system does not operate so that the wheels could lock up during a sudden braking or braking on slippery road surfaces.

If either of the following conditions occurs, this indicates a malfunction somewhere in the components monitored by the warning light system. Contact your Scion dealer as soon as possible to service the vehicle.

- When the ignition key is turned to the “ON” position, the light does not come on or remains on.
- The light comes on while you are driving.

A warning light turning on briefly during operation does not indicate a problem.

CAUTION

If the “ABS” warning light remains on together with the brake system warning light, immediately stop your vehicle at a safe place and contact your Scion dealer.

In this case, not only the anti–lock brake system will fail but also the vehicle will become extremely unstable during braking.

BRAKE ASSIST SYSTEM

When you slam the brakes on, the brake assist system judges as an emergency stop and provides more powerful braking for a driver who cannot hold down the brake pedal firmly.

When you slam the brakes on, more powerful braking will be applied. At this time, you may hear a sound in the engine compartment and feel the vibrations of the brake pedal. This does not indicate a malfunction.

The brake assist system becomes operative after the vehicle has accelerated to a speed in excess of approximately 10 km/h (6 mph). It stops operating when the vehicle decelerates to a speed below approximately 5 km/h (3 mph).

For an explanation of this system’s warning light, see “Service reminder indicators and warning buzzers” on page 85.

Brake pad wear limit indicators

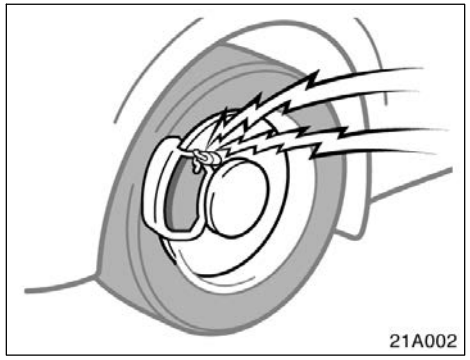

The brake pad wear limit indicators on your disc brakes give a warning noise when the brake pads are worn to where replacement is required.

If you hear a squealing or scraping noise while driving, have the brake pads checked and replaced by your Scion dealer as soon as possible. Expensive rotor damage can result if the pads are not replaced when necessary.

Your Scion's identification——Vehicle identification number

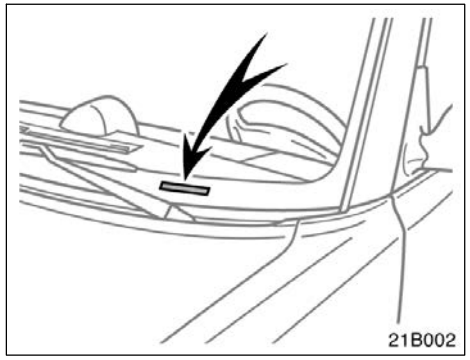

The vehicle identification number (VIN) is the legal identifier for your vehicle. This number is on the left top of the instrument panel, and can be seen through the windshield from outside.

This is the primary identification number for your Scion. It is used in registering the ownership of your vehicle.

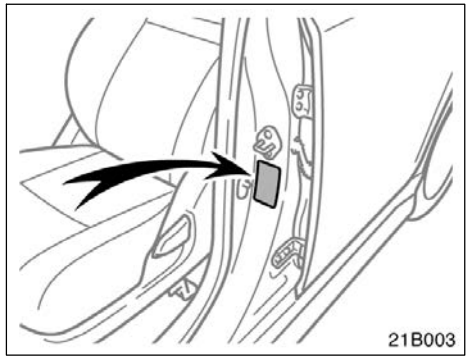

The vehicle identification number (VIN) is also on the Certification Label.

—Engine number

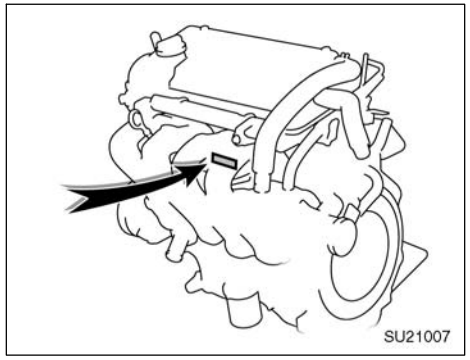

The engine number is stamped on the engine block as shown.

Theft prevention labels

Your new vehicle carries theft prevention labels which are approximately 56 mm (2.20 in.) by 16 mm (0.63 in.).

The purpose of these labels is to reduce the incidence of vehicle thefts by facilitating the tracing and recovery of parts from stolen vehicles. The label is designed so that once it is applied to a surface, any attempt to remove it will result in destroying the integrity of the label. Transferring these labels intact from one part to another will be impossible.

NOTICE

You should not attempt to remove the theft prevention labels as it may violate certain state or federal laws.

Suspension and chassis

⚠ CAUTION

Do not modify the suspension/chassis with lift kits, spacers, springs, etc. It can cause dangerous handling characteristics, resulting in loss of control.

Tire information—
—Tire symbols (Standard tire)

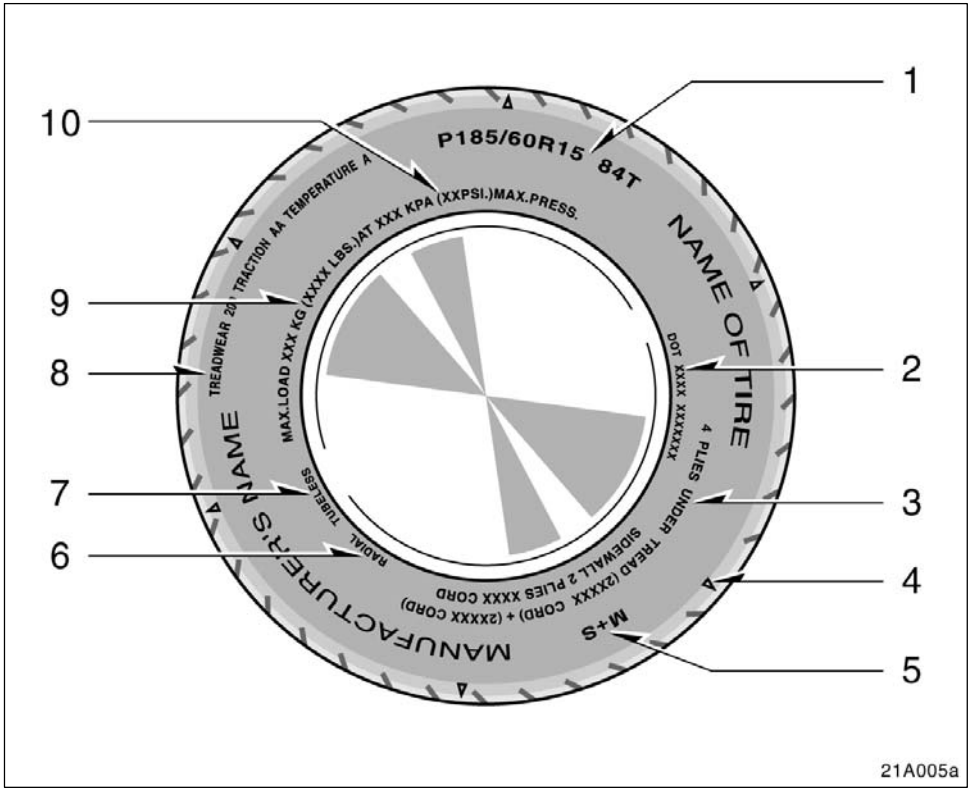

This illustration indicates typical tire symbols.

1. **Tire size—**For details, see “Tire size” on page 139.
2. **DOT and Tire Identification Number (TIN)—**For details, see “DOT and Tire Identification Number (TIN)” on page 138.
3. **Tire ply composition and materials—**Plies mean a layer of rubber–coated parallel cords. Cords mean the strands forming the plies in the tire.
4. **Location of tread wear indicators—**For details, see “Checking and replacing tires” on page 211.
5. **Summer tire or all season tire—**An all season tire has “M+S” on the sidewall. The tire not marked with “M+S” is a summer tire. For details, see “Types of tires” on page 148.
6. **Radial tires or bias–ply tires—**A radial tire has “RADIAL” on the sidewall. A tire not marked with “RADIAL” is a bias–ply tire.

7. **“TUBELESS” or “TUBE TYPE”—**A tubeless tire does not have a tube inside the tire and air is directly filled in the tire. A tube type tire has a tube inside the tire and the tube maintains the air pressure.
8. **Uniform tire quality grading—**For details, see “Uniform tire quality grading” that follows.
9. **Load limit at maximum cold tire inflation pressure—**For details, see “Checking and replacing tires” on page 211.
10. **Maximum cold tire inflation pressure—**This means the pressure to which a tire may be inflated. For recommended cold tire inflation pressure, see “Tires” on page 231.

—Tire symbols
(Compact spare tire)

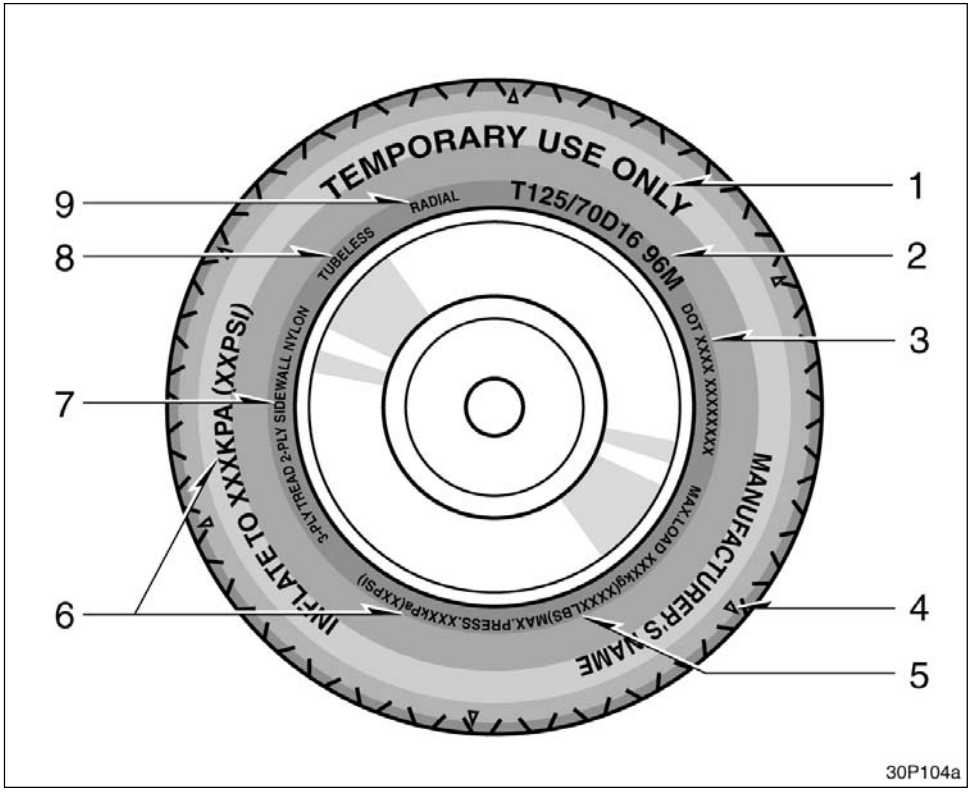

This illustration indicates typical tire symbols.

1. **"TEMPORARY USE ONLY"—**A compact spare tire is identified by the phrase "TEMPORARY USE ONLY" molded into its sidewall. This tire is designed for temporary emergency use only. For details, see "Compact spare tire" on page 166.
2. **Tire size—**For details, see "Tire size" on page 139.
3. **DOT and Tire Identification Number (TIN)—**For details, see "DOT and Tire Identification Number (TIN)" on page 138.
4. **Location of tread wear indicators—**For details, see "Checking and replacing tires" on page 211.
5. **Load limit at maximum cold tire inflation pressure—**For details, see "Checking and replacing tires" on page 211.

6. **Maximum cold tire inflation pressure—**This means the pressure to which a tire may be inflated. For recommended cold tire inflation pressure, see “Tires” on page 231.
7. **Tire ply composition and materials—**Plies mean a layer of rubber–coated parallel cords. Cords mean the strands forming the plies in the tire.
8. **“TUBELESS” or “TUBE TYPE” —**A tubeless tire does not have a tube inside the tire and air is directly filled in the tire. A tube type tire has a tube inside the tire and the tube maintains the air pressure.
9. **Radial tires or bias–ply tires—**A radial tire has “RADIAL” on the sidewall. A tire not marked with “RADIAL” is a bias–ply tire.

—DOT and Tire Identification Number (TIN)

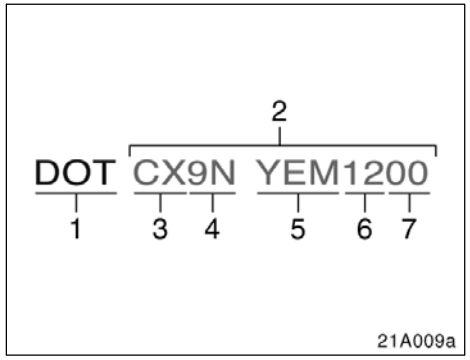

This illustration indicates typical DOT and Tire Identification Number (TIN).

1. “DOT” symbol
2. Tire Identification Number (TIN)
3. Tire manufacturer’s identification mark
4. Tire size code
5. Manufacturer’s optional tire type code (3 or 4 letters)
6. Manufacturing week
7. Manufacturing year

The “DOT” symbol certifies that the tire conforms to applicable Federal Motor Vehicle Safety Standards.

—Tire size

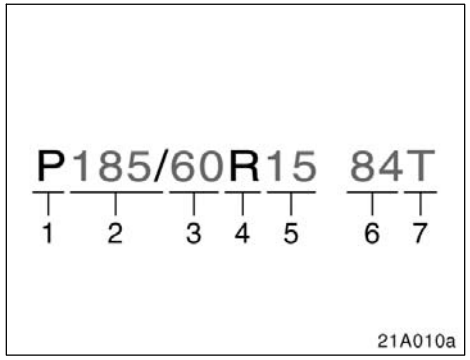

This illustration indicates typical tire size.

1. Tire use (P=Passenger car, T=Temporary use)
2. Section width (in millimeters)
3. Aspect ratio (tire height to section width)
4. Tire construction code (R=Radial, D=Diagonal)
5. Wheel diameter (in inches)
6. Load index (2 digits or 3 digits)
7. Speed symbol (alphabet with one letter)

1. Section width
2. Tire height
3. Wheel diameter

—Name of each section of tire

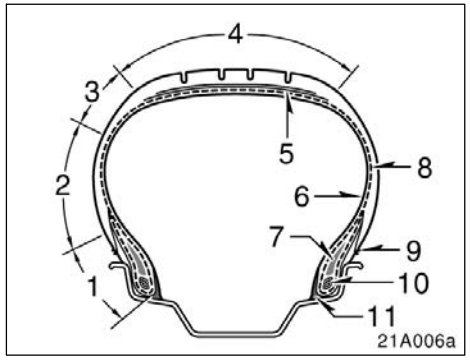

1. Bead
2. Sidewall
3. Shoulder
4. Tread
5. Belt
6. Inner liner
7. Reinforcing rubber
8. Carcass
9. Rim lines
10. Bead wires
11. Chafer

—Uniform tire quality grading

This information has been prepared in accordance with regulations issued by the National Highway Traffic Safety Administration of the U.S. Department of Transportation. It provides the purchasers and/or prospective purchasers of Scion vehicles with information on uniform tire quality grading.

Your Scion dealer will help answer any questions you may have as you read this information.

DOT quality grades—All passenger vehicle tires must conform to Federal Safety Requirements in addition to these grades. Quality grades can be found where applicable on the tire sidewall between tread shoulder and maximum section width.

For example:
Treadwear 200 Traction AA
Temperature A

Treadwear—The treadwear grade is a comparative rating based on the wear rate of the tire when tested under controlled conditions on a specified government test course. For example, a tire graded 150 would wear one and a half (1–1/2) times as well on the government course as a tire graded 100. The relative performance of tires depends upon the actual conditions of their use, however, and may depart significantly from the norm due to variations in driving habits, service practices and differences in road characteristics and climate.

Traction AA, A, B, C—The traction grades, from highest to lowest, are AA, A, B, and C, and they represent the tire's ability to stop on wet pavement as measured under controlled conditions on specified government test surfaces of asphalt and concrete. A tire marked C may have poor traction performance.

Warning: The traction grade assigned to this tire is based on braking (straight ahead) traction tests and does not include cornering (turning) traction.

Temperature A, B, C—The temperature grades are A (the highest), B, and C, representing the tire's resistance to the generation of heat and its ability to dissipate heat when tested under controlled conditions on a specified indoor laboratory test wheel. Sustained high temperature can cause the material of the tire to degenerate and reduce tire life, and excessive temperature can lead to sudden tire failure. The grade C corresponds to a level of performance which all passenger car tires must meet under the Federal Motor Vehicle Safety Standard No. 109. Grades B and A represent higher levels of performance on the laboratory test wheel than the minimum required by law.

Warning: The temperature grades for this tire are established for a tire that is properly inflated and not overloaded. Excessive speed, underinflation, or excessive loading, either separately or in combination, can cause heat buildup and possible tire failure.

—Glossary of tire terminology

Tire related term	Meaning
Cold tire inflation pressure	tire inflation pressure when the vehicle has been parked for at least 3 hours or more, or it has not been driven more than 1.5 km or 1 mile under that condition
Maximum inflation pressure	the maximum cold inflation pressure to which a tire may be inflated and it is shown on the sidewall of the tire
Recommended inflation pressure	cold tire inflation pressure recommended by a manufacturer
Accessory weight	the combined weight (in excess of those standard items which may be replaced) of automatic transmission, power steering, power brakes, power windows, power seats, radio, and heater, to the extent that these items are available as factory–installed equipment (whether installed or not)
Curb weight	the weight of a motor vehicle with standard equipment including the maximum capacity of fuel, oil, and coolant, and, if so equipped, air conditioning and additional weight optional engine
Maximum loaded vehicle weight	the sum of— (a) curb weight; (b) accessory weight; (c) vehicle capacity weight; and (d) production options weight
Normal occupant weight	68 kg (150 lb.) times the number of occupants specified in the second column of Table 1 that follows

Tire related term	Meaning
Production options weight	the combined weight of those installed regular production options weighing over 2.3 kg (5 lb.) in excess of those standard items which they replace, not previously considered in curb weight or accessory weight, including heavy duty brakes, ride levelers, roof rack, heavy duty battery, and special trim
Vehicle capacity weight (Total load capacity)	the rated cargo and luggage load plus 68 kg (150 lb.) times the vehicle's designated seating capacity
Intended outboard sidewall	(A) the sidewall that contains a whitewall, bears white lettering or bears manufacturer, brand, and/or model name molding that is higher or deeper than the same molding on the other sidewall of the tire, or (B) the outward facing sidewall of an asymmetrical tire that has a particular side that must always face outward when mounted on a vehicle
Occupant distribution	distribution of occupants in a vehicle as specified in the third column of Table 1 that follows
Rim	a metal support for a tire or a tire and tube assembly upon which the tire beads are seated
Rim diameter (Wheel diameter)	nominal diameter of the bead seat
Rim size designation	rim diameter and width
Rim type designation	the industry of manufacturer's designation for a rim by style or code
Rim width	nominal distance between rim flanges
Vehicle maximum load on the tire	the load on an individual tire that is determined by distributing to each axle its share of the maximum loaded vehicle weight and dividing by two

Tire related term	Meaning
Vehicle normal load on the tire	the load on an individual tire that is determined by distributing to each axle its share of the curb weight, accessory weight, and normal occupant weight (distributed in accordance with Table 1 that follows) and dividing by two
Weather side	the surface area of the rim not covered by the inflated tire

Table 1– Occupant loading and distribution for vehicle normal load for various designated seating capacities

Designated seating capacity, number of occupants	Vehicle normal load, number of occupants	Occupant distribution in a normally loaded vehicle
2 through 4	2	2 in front
5 through 10	3	2 in front, 1 in second seat

Vehicle load limits

Vehicle load limits include total load capacity, seating capacity, towing capacity and cargo capacity. Follow the load limits shown below. Total load capacity and seating capacity are also described on the tire and loading information label. For location of the tire and loading information label, see “Checking tire inflation pressure” on page 209.

Total load capacity:
375 kg (825 lb.)
Total load capacity means combined weight of occupants, cargo and luggage.

Seating capacity:
Total 5 (Front 2, Rear 3)
Seating capacity means the maximum number of occupants whose estimated average weight is 68 kg (150 lb.) per person. Depending on the weight of each person, the seating capacity given may exceed the total load capacity.

NOTICE

Even if the number of occupants are within the seating capacity, do not exceed the total load capacity.

Towing capacity

Scion does not recommend towing a trailer with your vehicle. Your vehicle is not designed for trailer towing.

Cargo capacity

Cargo capacity may increase or decrease depending on the size (weight) and the number of occupants. For details, see “Capacity and distribution” that follows.

⚠ CAUTION

Do not apply the load more than each load limit. That may cause not only damage to the tires, but also deterioration to the steering ability and braking ability, which may cause an accident.

Cargo and luggage—
—Stowage precautions

When stowing cargo and luggage in the vehicle, observe the following:

- Put cargo and luggage in the luggage compartment when at all possible. Be sure all items are secured in place.
- Be careful to keep the vehicle balanced. Locating the weight as far forward as possible helps maintain balance.
- For better fuel economy, do not carry unneeded weight.

⚠ CAUTION

- **To prevent cargo and luggage from sliding forward during braking, do not stack anything in the luggage compartment. Keep cargo and luggage low, as close to the floor as possible.**

- **Never allow anyone to ride in the luggage compartment. It is not designed for passengers. They should ride in their seats with their seat belts properly fastened. Otherwise, they are much more likely to suffer serious bodily injury, in the event of sudden braking or a collision.**
- **Do not drive with objects left on top of the instrument panel. They may interfere with the driver's field of view. Or they may move during sudden vehicle acceleration or turning, and impair the driver's control of the vehicle. In an accident they may injure the vehicle occupants.**

NOTICE

Do not load the vehicle beyond the vehicle capacity weight given in Section 8.

—Capacity and distribution

Cargo capacity depends on the total weight of the occupants.

(Cargo capacity) = (Total load capacity) – (Total weight of occupants)

Steps for Determining Correct Load Limit—

(1) Locate the statement "The combined weight of occupants and cargo should never exceed XXX kg or XXX lbs." on your vehicle's placard.

(2) Determine the combined weight of the driver and passengers that will be riding in your vehicle.

(3) Subtract the combined weight of the driver and passengers from XXX kg or XXX lbs.

(4) The resulting figure equals the available amount of cargo and luggage load capacity. For example, if the “XXX” amount equals 1400 lbs. and there will be five 150 lb passengers in your vehicle, the amount of available cargo and luggage load capacity is 650 lbs. (1400–750 (5x150)=650 lbs.)

(5) Determine the combined weight of luggage and cargo being loaded on the vehicle. That weight may not safely exceed the available cargo and luggage load capacity calculated in Step 4.

(6) If your vehicle will be towing a trailer, load from your trailer will be transferred to your vehicle. Consult this manual to determine how this reduces the available cargo and luggage load capacity of your vehicle.

Scion does not recommend towing a trailer with your vehicle. It is not designed for trailer towing.

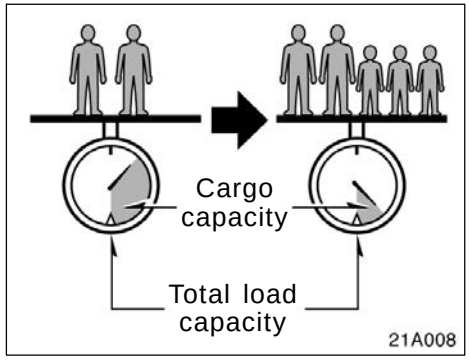

Example on Your Vehicle

In case that 2 people with the combined weight of 166 kg (366 lb.) are riding in your vehicle with the total load capacity of 375 kg (825 lb.), the available amount of cargo and luggage load capacity will be as follows:

375 kg – 166 kg = 209 kg.
(825 lb. – 366 lb. = 459 lb.)

From this condition, if 3 more passengers with the combined weight of 176 kg (388 lb.) get on, the available cargo and luggage load will be reduced as follows:

209 kg – 176 kg = 33 kg.
(459 lb. – 388 lb. = 71 lb.)

As shown in the above example, if the number of occupants increases, the cargo and luggage load equaling the combined weight of occupants who got on later must be reduced. In other words, if the increase in the number of occupants causes the excess of the total load capacity (combined weight of occupants plus cargo and luggage load), you have to reduce the cargo and luggage on your vehicle.

For details about total load capacity, see “Vehicle load limits” on page 145.

⚠ CAUTION

Even if the total load of occupant’s weight and the cargo load is less than the total load capacity, do not apply the load unevenly. That may cause not only damage to the tire but also deterioration to the steering ability due to unbalance of the vehicle, causing an accident.

Types of tires

Determine what kind of tires your vehicle is originally equipped with.

1. Summer tires

Summer tires are high–speed capability tires best suited to highway driving under dry conditions.

Since summer tires do not have the same traction performance as snow tires, summer tires are inadequate for driving on snow–covered or icy roads. For driving on snow–covered or icy roads, we recommend using snow tires. If installing snow tires, be sure to replace all four tires.

2. All season tires

All season tires are designed to provide better traction in snow and to be adequate for driving in most winter conditions, as well as for use all year round.

All season tires, however, do not have adequate traction performance compared with snow tires in heavy or loose snow. Also, all season tires fall short in acceleration and handling performance compared with summer tires in highway driving.

The details about how to distinguish summer tires from all season tires are described on page 135.

⚠ CAUTION

- **Do not mix summer and all season tires on your vehicle as this can cause dangerous handling characteristics, resulting in loss of control.**
- **Do not use tires other than the manufacturer's designated tires, and do not mix tires or wheels of the sizes different from the originally equipped tires and wheels.**

SECTION 3

STARTING AND DRIVING

Starting and driving

Before starting the enginee 152
How to start the engine 152
Tips for driving in various conditions 153
Winter driving tips 154
Dinghy towing 155
Trailer towing 157
How to save fuel and make your vehicle last longer, too 157

Before starting the engine

1. Check the area around the vehicle before entering it.
2. Adjust seat position, seatback angle, head restraint height and steering wheel angle.
3. Adjust inside and outside rear view mirrors.
4. Lock all side doors and back door.
5. Fasten seat belts.

How to start the engine—(a) Before cranking

1. Apply the parking brake firmly.
2. Turn off unnecessary lights and accessories.
3. **Manual transmission:** Press the clutch pedal to the floor and shift the transmission into neutral. Hold the clutch pedal to the floor until the engine is started. A starter safety device will prevent the starter from operating if the clutch pedal is not fully depressed.

   Automatic transmission: Put the selector lever in “P”. If you need to restart the engine while the vehicle is moving, put the selector lever in “N”. A starter safety device will prevent the starter from operating if the selector lever is in any drive position.
4. **Automatic transmission only:** Depress the brake pedal and hold it to the floor until driving off.

(b) Starting the engine

Before starting the engine, be sure to follow the instructions in “(a) Before cranking”.

Normal starting procedure

The multiport fuel injection system/sequential multiport fuel injection system in your engine automatically controls the proper air–fuel mixture for starting. You can start a cold or hot engine as follows:

With your foot off the accelerator pedal, crank the engine by turning the key to “START”. Release it when the engine starts.

Engine should be warmed up by driving, not in idle. For warming up drive with smoothly turning engine until engine coolant temperature is within normal range.

If the engine stalls...

Simply restart it, using the correct procedure given in normal starting.

If the engine will not start...

See “If your vehicle will not start” on page 160.

NOTICE

- ***Do not crank for more than 30 seconds at a time. This may overheat the starter and wiring systems.***
- ***Do not race a cold engine.***
- ***If the engine becomes difficult to start or stalls frequently, have the engine checked immediately.***

Tips for driving in various conditions

- Always slow down in gusty crosswinds. This will allow you much better control.
- Drive slowly onto curbs and, if possible, at a right angle. Avoid driving onto high, sharp–edged objects and other road hazards. Failure to do so can lead to severe tire damage such as a tire burst.
  Drive slowly when passing over bumps or travelling on a bumpy road. Otherwise, the impact could cause severe damage to the tires and/or wheels.
- When parking on a hill, turn the front wheels until they touch the curb so that the vehicle will not roll. Apply the parking brake, and place the transmission in “P” (automatic) or in first or reverse (manual). If necessary, block the wheels.
- Washing your vehicle or driving through deep water may get the brakes wet. To see whether they are wet, check that there is no traffic near you, and then press the pedal lightly. If you do not feel a normal braking force, the brakes are probably wet. To dry them, drive the vehicle cautiously while lightly pressing the brake pedal with the parking brake applied. If they still do not work safely, pull to the side of the road and call a Scion dealer for assistance.

⚠ CAUTION

- **Before driving off, make sure the parking brake is fully released and the parking brake reminder light is off.**
- **Do not leave your vehicle unattended while the engine is running.**
- **Do not rest your foot on the brake pedal while driving. It can cause dangerous overheating, needless wear, and poor fuel economy.**
- **To drive down a long or steep hill, reduce your speed and downshift. Remember, if you ride the brakes excessively, they may overheat and not work properly.**
- **Be careful when accelerating, upshifting, downshifting or braking on a slippery surface. Sudden acceleration or engine braking could cause the vehicle to skid or spin.**

- **Do not drive in excess of the speed limit. Even if the legal speed limit permits it, do not drive over 140 km/h (85 mph) unless your vehicle has high–speed capability tires. Driving over 140 km/h (85 mph) may result in tire failure, loss of control and possible injury. Be sure to consult a tire dealer to determine whether the tires on your vehicle are high–speed capability tires or not before driving at such speeds.**
- **Do not continue normal driving when the brakes are wet. If they are wet, your vehicle will require a longer stopping distance, and it may pull to one side when the brakes are applied. Also, the parking brake will not hold the vehicle securely.**

Winter driving tips

Make sure you have a proper freeze protection for engine coolant.

Only use "Toyota Super Long Life Coolant" or similar high quality ethylene glycol based non–silicate, non–amine, non–nitrite, and non–borate coolant with long–life hybrid organic acid technology. (Coolant with long–life hybrid organic acid technology is a combination of low phosphates and organic acids.)

See "Checking the engine coolant level" on page 206 for details of coolant type selection.

"Toyota Super Long Life Coolant" is a mixture of 50% coolant and 50% deionized water. This coolant provides protection down to about –35°C (–31°F).

NOTICE
Do not use plain water alone.

Check the condition of the battery and cables.

Cold temperatures reduce the capacity of any battery, so it must be in top shape to provide enough power for winter starting. Section 7–3 tells you how to visually inspect the battery. Your Scion dealer and most service stations will be pleased to check the level of charge.

Make sure the engine oil viscosity is suitable for the cold weather.

See page 205 for recommended viscosity. Leaving a heavy summer oil in your vehicle during winter months may cause harder starting. If you are not sure about which oil to use, call your Scion dealer—they will be pleased to help.

Keep the door locks from freezing.

Squirt lock de–icer or glycerine into the locks to keep them from freezing. To open a frozen lock, try heating the key before inserting it.

Use a washer fluid containing an antifreeze solution.

This product is available at your Scion dealer and most auto parts stores. Follow the manufacturer's directions for how much to mix with water.

NOTICE
Do not use engine antifreeze or any other substitute because it may damage your vehicle's paint.

Do not use your parking brake when there is a possibility it could freeze.

When parking, put the transmission into "P" (automatic) or into first or reverse (manual) and block the rear wheels. Do not use the parking brake, or snow or water accumulated in and around the parking brake mechanism may freeze, making it hard to release.

Keep ice and snow from accumulating under the fenders.

Ice and snow built up under your fenders can make steering difficult. During bad winter driving, stop and check under the fenders occasionally.

Depending on where you are driving, we recommend you carry some emergency equipment.

Some of the things you might put in the vehicle are tire chains, window scraper, bag of sand or salt, flares, small shovel, jumper cables, etc.

Dinghy towing (with automatic transmission)

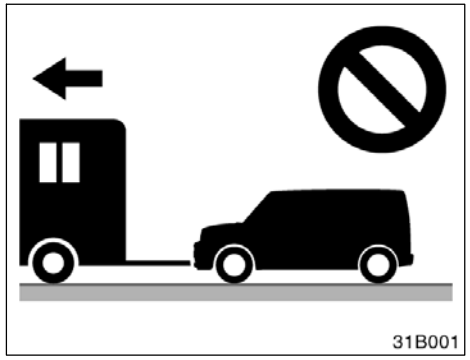

If your vehicle has automatic transmission, your vehicle is not designed to be dinghy towed (with four wheels on the ground) behind a motorhome.

NOTICE
Do not tow your vehicle with four wheels on the ground. This may cause serious damage to your vehicle.

Dinghy towing
(with manual transmission)

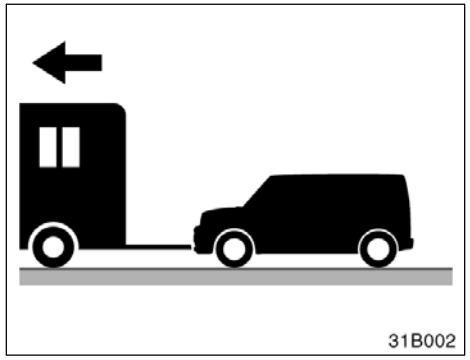

If your vehicle has manual transmission, your vehicle can be dinghy towed (with four wheels on the ground) from the front behind a motorhome.

⚠ CAUTION

Dinghy towing requires special equipment and accessories. Please refer to your service outlet of the motorhome manufacturer for the recommended equipment.

NOTICE

Dinghy towing does not eliminate the possibility of damage to your vehicle.

DINGHY TOWING TIPS

Before dinghy towing, be sure to observe the following in order to reduce the damage to your vehicle.

1. Put the selector lever in neutral.
2. Turn the ignition switch to the “ACC” position.

NOTICE

To avoid the locking of the steering wheel, turn the ignition switch to the “ACC” position.

3. Release the parking brake.

After dinghy towing, let the engine idle for more than 3 minutes before driving the vehicle.

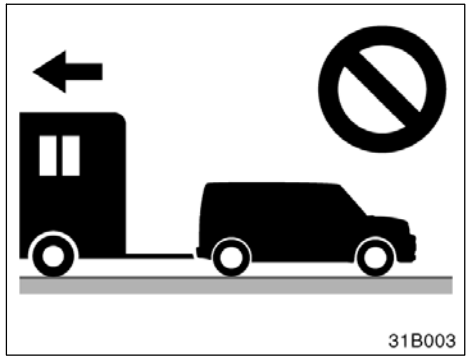

NOTICE

Do not tow your vehicle from the rear. This may cause serious damage to your vehicle.

Trailer towing

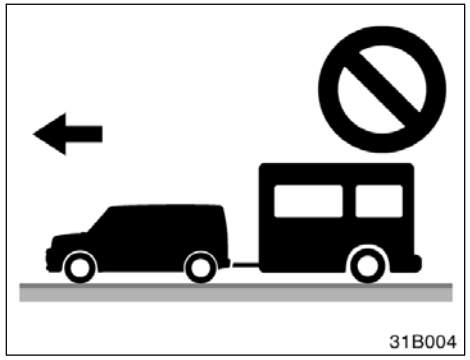

Scion does not recommend towing a trailer with your vehicle. Scion also does not recommend the installation of a tow hitch or the use of a tow hitch carrier for a wheelchair, scooter, bicycle, etc. Your Scion is not designed for trailer towing or for the use of tow hitch mounted carriers.

How to save fuel and make your vehicle last longer, too

Improving fuel economy is easy–just take it easy. It will help make your vehicle last longer, too. Here are some specific tips on how to save money on both fuel and repairs:

- **Keep your tires inflated at the correct pressure.** Underinflation causes tire wear and wastes fuel. See page 209 for instructions.
- **Do not carry unneeded weight in your vehicle.** Excess weight puts a heavier load on the engine, causing greater fuel consumption.
- **Avoid lengthy warm–up idling.** Once the engine is running smoothly, begin driving—but gently. Remember, however, that on cold winter days this may take a little longer.
- **Keep the automatic transmission overdrive turned on when engine braking is not required.** Driving with the overdrive off will reduce the fuel economy. (For details, see “Automatic transmission” on page 95.)
- **Accelerate slowly and smoothly.** Avoid jackrabbit starts. Get into high gear as quickly as possible.
- **Avoid long engine idling.** If you have a long wait and you are not in traffic, it is better to turn off the engine and start again later.
- **Avoid engine lugging or over–revving.** Use a gear position suitable for the road on which you are travelling.
- **Avoid continuous speeding up and slowing down.** Stop–and–go driving wastes fuel.
- **Avoid unnecessary stopping and braking.** Maintain a steady pace. Try to time the traffic signals so you only need to stop as little as possible or take advantage of through streets to avoid traffic lights. Keep a proper distance from other vehicles to avoid sudden braking. This will also reduce wear on your brakes.
- **Avoid heavy traffic or traffic jams whenever possible.**
- **Do not rest your foot on the clutch or brake pedal.** This causes needless wear, overheating and poor fuel economy.
- **Maintain a moderate speed on highways.** The faster you drive, the greater the fuel consumption. By reducing your speed, you will cut down on fuel consumption.

- **Keep the front wheels in proper alignment.** Avoid hitting the curb and slow down on rough roads. Improper alignment not only causes faster tire wear but also puts an extra load on the engine, which, in turn, wastes fuel.
- **Keep the bottom of your vehicle free from mud, etc.** This not only lessens weight but also helps prevent corrosion.
- **Keep your vehicle tuned−up and in top shape.** A dirty air cleaner, improper valve clearance, dirty plugs, dirty oil and grease, brakes not adjusted, etc. all lower engine performance and contribute to poor fuel economy. For longer life of all parts and lower operating costs, keep all maintenance work on schedule, and if you often drive under severe conditions, see that your vehicle receives more frequent maintenance. (For scheduled maintenance information, please refer to the "Scheduled Maintenance Guide" or "Owner's Manual Supplement".)

⚠ CAUTION

Never turn off the engine to coast down hills. Your power steering and brake booster will not function without the engine running. Also, the emission control system operates properly only when the engine is running.

SECTION 4

IN CASE OF AN EMERGENCY

In case of an emergency

If your vehicle will not startt 160
If your engine stalls while driving 163
If your vehicle overheats 163
If you have a flat tire 164
If your vehicle becomes stuck 175
If your vehicle needs to be towed 175
If you cannot shift automatic transmission selector lever 180
If you lose your keys 180
If you lose your wireless remote control transmitter 181
If you cannot operate back door opener 181

If your vehicle will not start—
(a) Simple checks

Before making these checks, make sure you have followed the correct starting procedure given in “How to start the engine” on page 152 and that you have sufficient fuel.

If the engine is not turning over or is turning over too slowly—

1. Check that the battery terminals are tight and clean.
2. If the battery terminals are O.K., switch on the interior light.
3. If the light is out, dim or goes out when the starter is cranked, the battery is discharged. You may try jump starting. See “(c) Jump starting” for further instructions.

If the light is O.K., but the engine still will not start, it needs adjustment or repair. Call a Scion dealer or qualified repair shop.

NOTICE
Do not pull− or push−start the vehicle. It may damage the vehicle or cause a collision when the engine starts. Also the three−way catalytic converter may overheat and become a fire hazard.

If the engine turns over at its normal speed but will not start—

1. The engine may be flooded because of repeated cranking. See “(b) Starting a flooded engine” for further instructions.
2. If the engine still will not start, it needs adjustment or repair. Call a Scion dealer or qualified repair shop.

(b) Starting a flooded engine

If the engine will not start, your engine may be flooded because of repeated cranking.

If this happens, turn the key to “START” with the accelerator pedal held down. Keep the key and accelerator pedal in these positions for 15 seconds and release them. Then try starting the engine with your foot off the accelerator pedal.

If the engine does not start after 30 seconds of cranking, release the key, wait a few minutes and try again.

If the engine still will not start, it needs adjustment or repair. Call a Scion dealer or qualified repair shop for assistance.

NOTICE
Do not crank for more than 30 seconds at a time. This may overheat the starter and wiring systems.

(c) Jump starting

To avoid serious personal injury and damage to your vehicle which might result from battery explosion, acid burns, electrical burns, or damaged electronic components, these instructions must be followed precisely.

If you are unsure about how to follow this procedure, we strongly recommend that you seek the help of a competent mechanic or towing service.

⚠ CAUTION

- **Batteries contain sulfuric acid which is poisonous and corrosive. Wear protective safety glasses when jump starting, and avoid spilling acid on your skin, clothing, or vehicle.**
- **If you should accidentally get acid on yourself or in your eyes, remove any contaminated clothing and flush the affected area with water immediately. Then get immediate medical attention. If possible, continue to apply water with a sponge or cloth while en route to the medical office.**
- **The gas normally produced by a battery will explode if a flame or spark is brought near. Use only standardized jumper cables and do not smoke or light a match while jump starting.**

NOTICE

The battery used for boosting must be 12 V. Do not jump start unless you are sure that the booster battery is correct.

JUMP STARTING PROCEDURE

1. If the booster battery is installed in another vehicle, make sure the vehicles are not touching. Turn off all unnecessary lights and accessories.

   When boosting, use the battery of matching or higher quality. Any other battery may be difficult to jump start with.

   If jump starting is difficult, charge the battery for several minutes.
2. If required, remove all the vent plugs from the booster and discharged batteries. Lay a cloth over the open vents on the batteries. (This helps reduce the explosion hazard, personal injuries and burns.)
3. If the engine in the vehicle with the booster battery is not running, start it and let it run for a few minutes. During jump starting, run the engine at about 2000 rpm with the accelerator pedal lightly depressed.

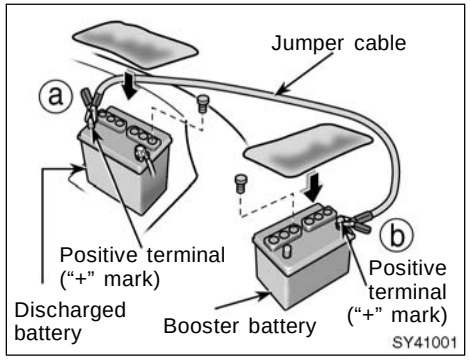

4. Make the cable connections in the order a, b, c, d.
   a. Connect the clamp of the positive (red) jumper cable to the positive (+) terminal on the discharged battery.
   b. Connect the clamp at the other end of the positive (red) jumper cable to the positive (+) terminal on the booster battery.

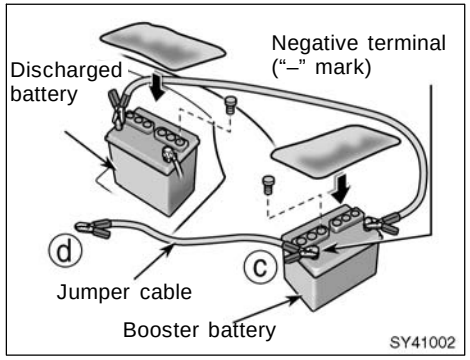

   c. Connect the clamp of the negative (black) jumper cable to the negative (–) terminal on the booster battery.
   d. Connect the clamp at the other end of the negative (black) jumper cable to a solid, stationary, unpainted, metallic point of the vehicle with the discharged battery.

The recommended connecting point is shown in the following illustration:

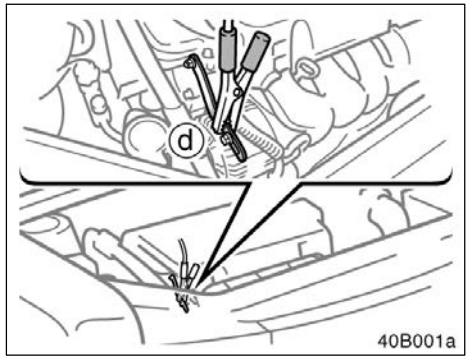

Connecting point

Do not connect the cable to or near any part that moves when the engine is cranked.

⚠ CAUTION

When making the connections, to avoid serious injury, do not lean over the battery or accidentally let the jumper cables or clamps touch anything except the correct battery terminals or the ground.

5. Start your engine in the normal way. After starting, run it at about 2000 rpm for several minutes with the accelerator pedal lightly depressed.
6. Carefully disconnect the cables in the exact reverse order: the negative cable and then the positive cable.
7. Carefully dispose of the battery cover cloths—they may now contain sulfuric acid.
8. If removed, replace all the battery vent plugs.

If the cause of your battery discharging is not apparent (for example, lights left on), you should have it checked at your Scion dealer.

If the first start attempt is not successful...

Check that the clamp on the jumper cables are tight. Recharge the discharged battery with the jumper cables connected for several minutes and restart your engine in the normal way.

If the another attempt is not successful, the battery may be depleted. Have it checked at your Scion dealer.

If your engine stalls while driving

If your engine stalls while driving...

1. Reduce your speed gradually, keeping a straight line. Move cautiously off the road to a safe place.
2. Turn on your emergency flashers.
3. Try starting the engine again.

If the engine will not start, see "If your vehicle will not start" on page 160.

CAUTION

If the engine is not running, the power assist for the brakes and steering will not work so steering and braking will be much harder than usual.

If your vehicle overheats

If your high engine coolant temperature warning light flashes to indicates overheating, if you experience a loss of power, or if you hear a loud knocking or pinging noise, the engine has probably overheated. You should follow this procedure...

1. Pull safely off the road, stop the vehicle and turn on your emergency flashers. Put the transmission in "P" (automatic) or neutral (manual) and apply the parking brake. Turn off the air conditioning if it is being used.
2. If coolant or steam is boiling out of the radiator or reservoir, stop the engine. Wait until the steam subsides before opening the hood. If there is no coolant boiling over or steam, leave the engine running and make sure the electric cooling fan is operating. If it is not, turn the ignition off.

CAUTION

To help avoid personal injury, keep the hood closed until there is no steam. Escaping steam or coolant is a sign of very high pressure.

3. Look for obvious coolant leaks from the radiator, hoses, and under the vehicle. However, note that water draining from the air conditioning is normal if it has been used.

⚠ CAUTION

When the engine is running, keep hands and clothing away from the moving fan and engine drive belts.

4. If the coolant is leaking, stop the engine immediately. Call a Scion dealer for assistance.
5. If there are no obvious leaks, check the coolant reservoir. If it is dry, add coolant to the reservoir while the engine is running. Fill it about half full.

⚠ CAUTION

Do not attempt to remove the radiator cap when the engine and radiator are hot. Serious injury could result from scalding hot fluid and steam blown out under pressure.

6. After the engine coolant temperature has cooled to normal, again check the coolant level in the reservoir. If necessary, bring it up to half full again. Serious coolant loss indicates a leak in the system. You should have it checked as soon as possible at your Scion dealer.

If you have a flat tire—

1. Reduce your speed gradually, keeping a straight line. Move cautiously off the road to a safe place well away from the traffic. Avoid stopping on the center divider of a highway. Park on a level spot with firm ground.
2. Stop the engine and turn on your emergency flashers.
3. Firmly set the parking brake and put the transmission in “P” (automatic) or reverse (manual).
4. Have everyone get out of the vehicle on the side away from traffic.
5. Read the following instructions thoroughly.

⚠ CAUTION

When jacking, be sure to observe the following to reduce the possibility of personal injury:

- **Follow jacking instructions.**
- **Do not put any part of your body under the vehicle supported by the jack. Personal injury may occur.**
- **Do not start or run the engine while your vehicle is supported by the jack.**
- **Stop the vehicle on a level firm ground, firmly set the parking brake and put the transmission in "P" (automatic) or reverse (manual). Block the wheel diagonally opposite to the one being changed if necessary.**
- **Make sure to set the jack properly in the jack point. Raising the vehicle with jack improperly positioned will damage the vehicle or may allow the vehicle to fall off the jack and cause personal injury.**
- **Never get under the vehicle when the vehicle is supported by the jack alone.**
- **Use the jack only for lifting your vehicle during wheel changing.**
- **Do not raise the vehicle with someone in the vehicle.**
- **When raising the vehicle, do not put an object on or under the jack.**
- **Raise the vehicle only high enough to remove and change the tire.**

NOTICE

Do not continue driving with a deflated tire. Driving even a short distance can damage a tire and wheel beyond repair.

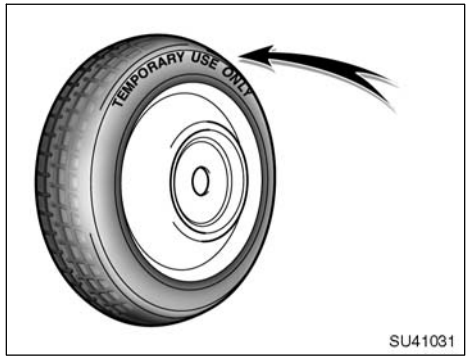

Compact spare tire

The compact spare tire is designed for temporary emergency use only.

The compact spare tire is identified by the distinctive wording "TEMPORARY USE ONLY" molded into the side wall of the tire.

To keep the compact spare tire noticeable, do not hide the wheel by a wheel cover or such.

The compact spare tire saves space in your luggage compartment, and its lighter weight helps to improve fuel economy and permits easier installation in case of a flat tire.

The compact spare tire can be used many times, if necessary. It has tread life of up to 4800 km (3000 miles) depending on road conditions and your driving habits. When tread wear indicators appear on the tire, replace the tire.

See also the tire information on page 211 for details on the tread wear indicators and other service information.

⚠ CAUTION

- **The compact spare tire was designed especially for your Scion. Do not use it on any other vehicle.**
- **Do not use more than one compact spare tire at the same time.**
- **The pressure for the compact spare tire must be 420 kpa (4.2 kgf/cm^2 or bar, 60 psi).**
- **Do not exceed 80 km/h (50 mph) when driving with the compact spare tire.**
- **Replace the compact spare tire with the standard tire as soon as possible.**
- **Avoid sudden acceleration, sudden deceleration and sharp turns with the compact spare tire.**

NOTICE

Your ground clearance is reduced when the compact spare tire is installed so avoid driving over obstacles and drive slowly on rough, unpaved roads and speed bumps. Also, do not attempt to go through an automatic car wash as the vehicle may get caught, resulting in damage.

—Required tools and spare tire

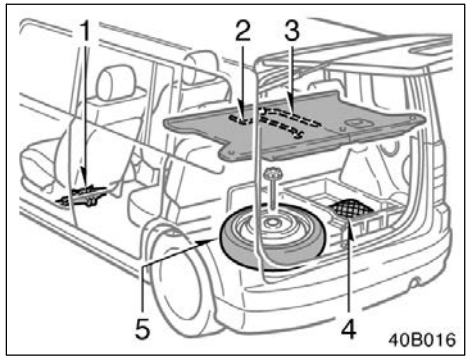

1. Open the luggage storage box and get the required tool and spare tire.

1. Jack
2. Jack handle
3. Wheel nut wrench
4. Flat tire net
5. Spare tire

To open the luggage storage box, see “Luggage storage box” on page 120.

To prepare yourself for an emergency, you should familiarize yourself with the use of the jack, each of the tools and their storage locations.

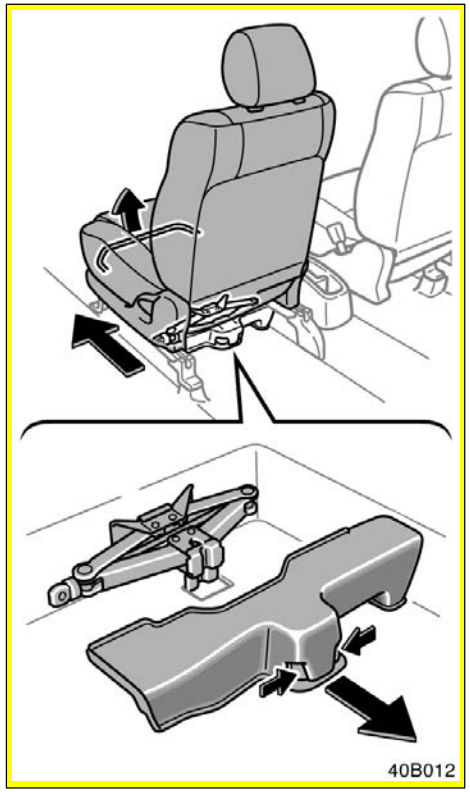

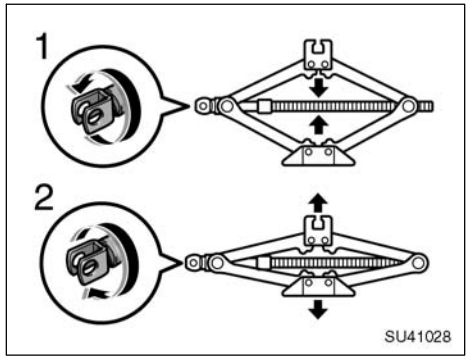

To remove the jack, move the driver seat to the front–most position and remove the cover.

To remove: Turn the joint in direction 1 by hand until the jack is free.

To store: Turn the joint in direction 2 by hand until the jack is firmly secured to prevent it flying forward during a collision or sudden braking.

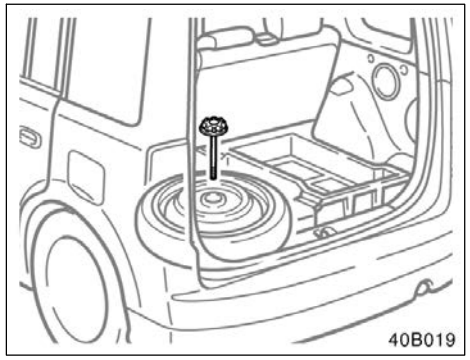

To remove the spare tire, loosen the bolt and remove it.

Then take the spare tire out of the vehicle.

When storing the spare tire, put it in place with the outer side of the wheel facing up. Then secure the tire by repeating the above removal steps in reverse order to prevent it from flying forward during a collision or sudden braking.

The compact tire storage area is designed only for a compact spare tire. Standard size tire cannot be stored in this storage area.

—Blocking the wheel

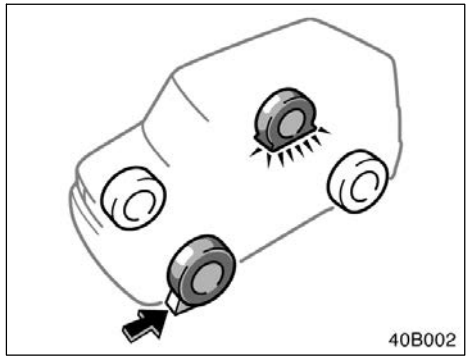

2. Block the wheel diagonally opposite the flat tire to keep the vehicle from rolling when it is jacked up.

When blocking the wheel, place a wheel block in front of one of the front wheels or behind one of the rear wheels.

—Loosening wheel nuts

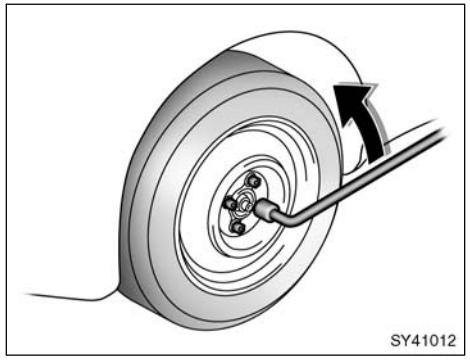

3. Loosen all the wheel nuts.

Always loosen the wheel nuts before raising the vehicle.

The nuts turn counterclockwise to loosen. To get maximum leverage, fit the wrench to the nut so that the handle is on the right side, as shown above. Grasp the wrench near the end of the handle and pull up on the handle. Be careful that the wrench does not slip off the nut.

Do not remove the nuts yet—just unscrew them about one–half turn.

⚠ CAUTION

Never use oil or grease on the bolts or nuts. The nuts may loosen and the wheels may fall off, which could cause a serious accident.

—Positioning the jack

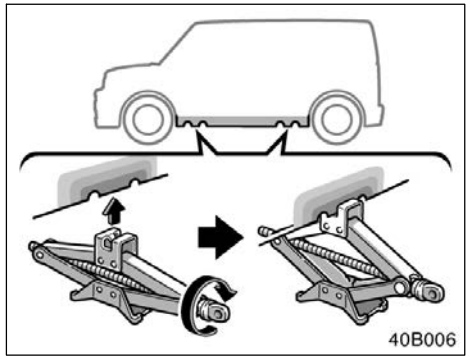

4. Position the jack at the correct jack point as shown.

Make sure the jack is positioned on a level and solid place.

—Raising your vehicle

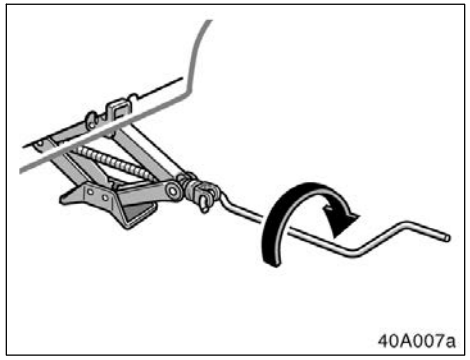

5. After making sure that no one is in the vehicle, raise it high enough so that the spare tire can be installed.

Remember you will need more ground clearance when putting on the spare tire than when removing the flat tire.

To raise the vehicle, insert the jack handle into the jack (it is a loose fit) and turn it clockwise. As the jack touches the vehicle and begins to lift, double–check that it is properly positioned.

⚠ CAUTION

Never get under the vehicle when the vehicle is supported by the jack alone.

—Changing wheels

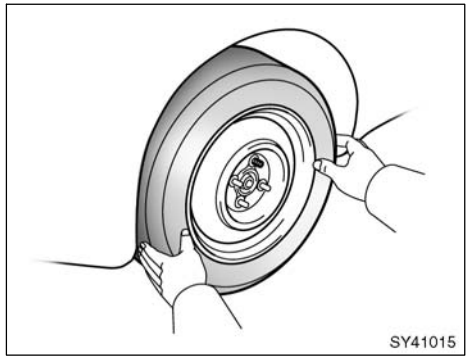

6. Remove the wheel nuts and change tires.

Lift the flat tire straight off and put it aside.

Roll the spare wheel into position and align the holes in the wheel with the bolts. Then lift up the wheel and get at least the top bolt started through its hole. Wiggle the tire and press it back over the other bolts.

—Reinstalling wheel nuts

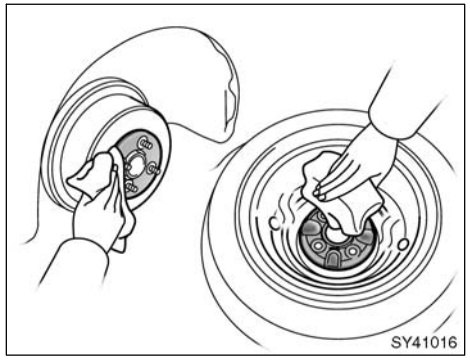

Before putting on wheels, remove any corrosion on the mounting surfaces with a wire brush or such. Installation of wheels without good metal–to–metal contact at the mounting surface can cause wheel nuts to loosen and eventually cause a wheel to come off while driving.

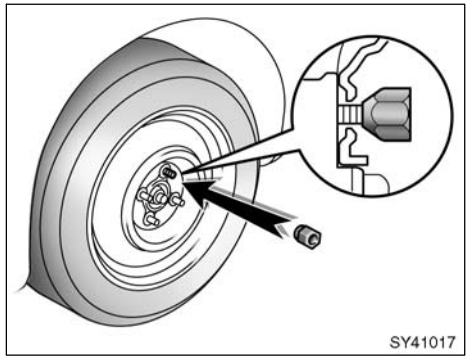

7. Reinstall all the wheel nuts finger tight.

Reinstall the wheel nuts (tapered end inward) and tighten them as much as you can by hand. Press back on the tire and see if you can tighten them more.

⚠ CAUTION

Never use oil or grease on the bolts or nuts. Doing so may lead to overtightening the nuts and damaging the bolts. The nuts may loosen and the wheels may fall off, which could cause a serious accident. If there is oil or grease on any bolt or nut, clean it.

—Lowering your vehicle

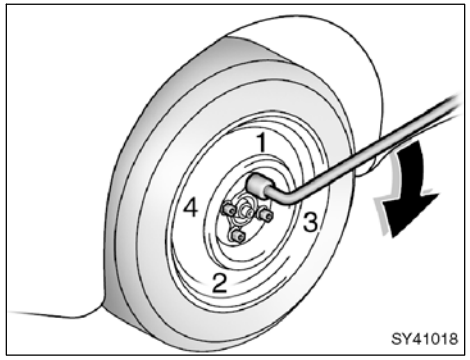

8. Lower the vehicle completely and tighten the wheel nuts.

Turn the jack handle counterclockwise to lower the vehicle.

Use only the wheel nut wrench to tighten the nuts. Do not use other tools or any additional leverage other than your hands, such as a hammer, pipe or your foot. Make sure the wrench is securely engaged over the nut.

Tighten each nut a little at a time in the order shown. Repeat the process until all the nuts are tight.

⚠ CAUTION

- **When lowering the vehicle, make sure all portions of your body and all other persons around will not be injured as the vehicle is lowered to the ground.**
- **Have the wheel nuts tightened with torque wrench to 103 N·m (10.5 kgf·m, 76 ft·lbf), as soon as possible after changing wheels. Otherwise, the nuts may loosen and the wheels may fall off, which could cause a serious accident.**

—Stowing flat tire

9. Restow all the tools and jack securely. Then secure the flat tire with the flat tire net in the luggage compartment as follows.

⚠ CAUTION

Before driving, make sure all the tools and jack are securely in place in their storage location to reduce the possibility of personal injury during a collision or sudden braking.

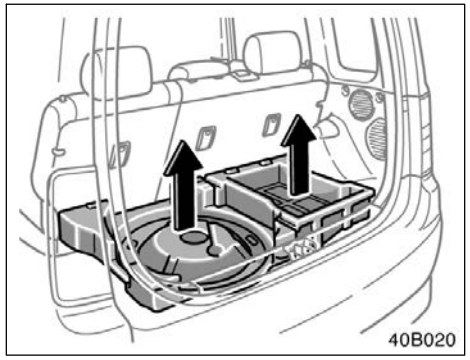

Remove the deck boxes and stow them away somewhere in the vehicle.

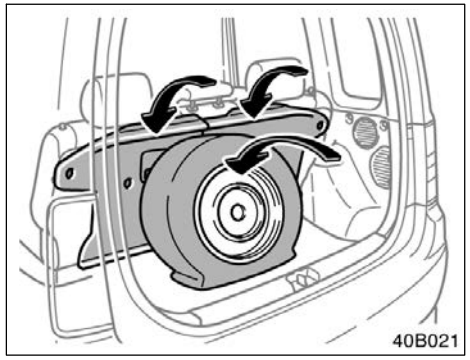

Put the flat tire on the center of the luggage floor. Then hold the deck boards (with the front side facing toward the back of the vehicle) between the rear seatback and flat tire.

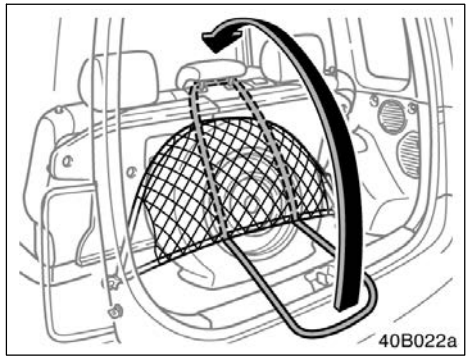

Wrap the flat tire with the flat tire net and hook the strap on the rear center head restraint.

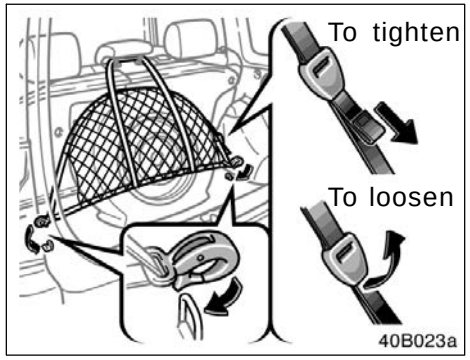

Hook the 2 hooks and adjust the belt so that the strap does not allow the slack.

⚠ CAUTION

- **After installation, rock the flat tire lightly to make sure the net is securely hooked. Loose net installation may cause the hook to come off and the tire to fly out of the net in case of sudden braking or collision, resulting in death or serious injury.**
- **With the flat tire installed, avoid driving on the rough road or for a long time. The belt may be loosened and come off.**

—After changing wheels

10. Check the air pressure of the replaced tire.

Adjust the air pressure to the specification designed on page 231. If the pressure is lower, drive slowly to the nearest service station and fill to the correct pressure.

Do not forget to reinstall the tire inflation valve cap as dirt and moisture could get into the valve core and possibly cause air leakage. If the cap is missing, have a new one put on as soon as possible.

As soon after changing wheels as possible, tighten the wheel nuts to the torque specified on page 231 with a torque wrench and have a technician repair the flat tire.

If your vehicle becomes stuck

If your vehicle becomes stuck in snow, mud, sand, etc., then you may attempt to rock the vehicle free by moving it forward and backward.

Turn off the traction control system to become unstuck to allow the tires to spin enough to remove the vehicle from the obstruction. (For details, see "Traction control system" on page 99.)

⚠ CAUTION

Do not attempt to rock the vehicle free by moving it forward and backward if people or objects are anywhere near the vehicle. During the rocking operation the vehicle may suddenly move forward or backward as it becomes unstuck, causing injury or damage to nearby people or objects.

NOTICE

If you rock your vehicle, observe the following precautions to prevent damage to the transmission and other parts.

- ***Do not depress the accelerator pedal while shifting the selector lever or before the transmission is completely shifted to forward or reverse gear.***
- ***Do not race the engine and avoid spinning the wheels.***
- ***If your vehicle remains stuck after rocking the vehicle several times, consider other ways such as towing.***

If your vehicle needs to be towed—

(a) Towing with wheel lift type truck—

—From front

—From rear

(b) Using flat bed truck

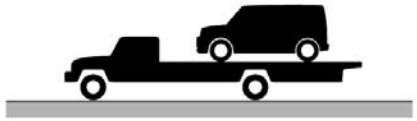

40B003

If towing is necessary, we recommend you to have it done by your Scion dealer or a commercial tow truck service. In consultation with them, have your vehicle towed using either (a) or (b).

Only when you cannot receive a towing service from a Scion dealer or commercial tow truck service, tow your vehicle carefully in accordance with the instructions given in "—Emergency towing" on page 177.

Proper equipment will help ensure that your vehicle is not damaged while being towed. Commercial operators are generally aware of the state/provincial and local laws pertaining to towing.

Your vehicle can be damaged if it is towed incorrectly. Although most operators know the correct procedure, it is possible to make a mistake. To avoid damage to your vehicle, make sure the following few precautions are observed. If necessary, show this page to the tow truck driver.

TOWING PRECAUTIONS:

Use a safety chain system for all towing, and abide by the state/provincial and local laws. The wheels and axle on the ground must be in good condition. If they are damaged, use a towing dolly.

(a) Towing with wheel lift type truck

From front—Release the parking brake.

NOTICE

When lifting wheels, take care to ensure adequate ground clearance for towing at the opposite end of the raised vehicle. Otherwise, the bumper and/or underbody of the towed vehicle will be damaged during towing.

From rear—

- Manual transmission:

  We recommend using a towing dolly under the front wheels. If you do not use a towing dolly, place the ignition key in the "ACC" position and put the transmission in neutral.

NOTICE

Do not tow with the key removed or in the "LOCK" position when towing from the rear without a towing dolly. The steering lock mechanism is not strong enough to hold the front wheels straight.

- Automatic transmission:

  Use a towing dolly under the front wheels.

NOTICE

Never tow a vehicle with an automatic transmission from the rear with the front wheels on the ground, as this may cause serious damage to the transmission.

(b) Using flat bed truck

—Emergency towing

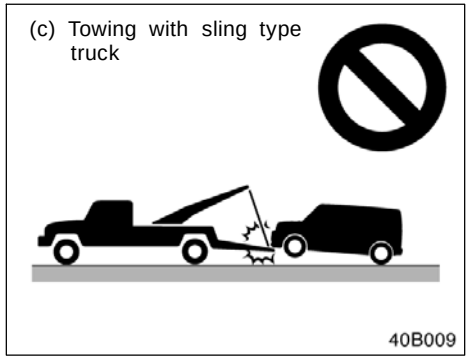

(c) Towing with sling type truck

NOTICE
Do not tow with sling type truck, either from the front or rear. This may cause body damage.

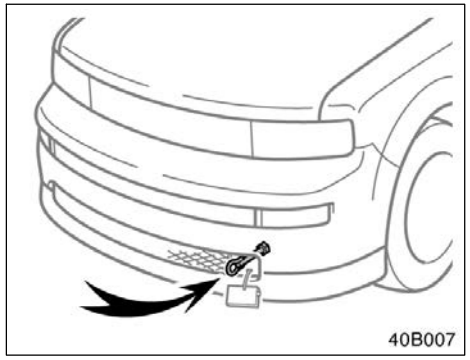

Front

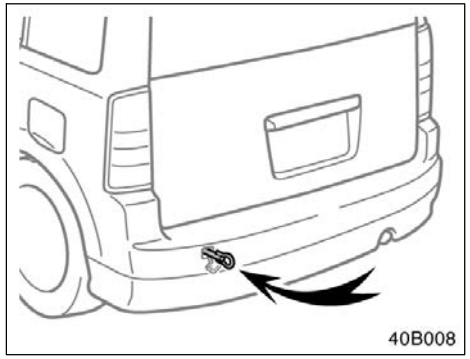

Rear

If towing is necessary, we recommend you to have it done by your Scion dealer or a commercial tow truck service.

If a towing service is not available in an emergency, your vehicle may be temporarily towed by a cable or chain secured to either the emergency towing eyelet on the front or the rear of the vehicle. Use extreme caution when towing vehicles.

Vehicles with an automatic transmission, use only the front towing eyelet when towing your vehicle.

To install the towing eyelet, see "—Installing towing eyelet" on page 178.

NOTICE
◆***Only use specified towing eyelet; otherwise your vehicle may be damaged.*** ◆***Vehicles with an automatic transmission, never tow a vehicle from the rear with four wheels on the ground. This may cause serious damage to the transmission.***

A driver must be in the vehicle to steer it and operate the brakes.

Towing in this manner may be done only on hard–surfaced roads for a short distance and at low speeds. Also, the wheels, axles, drive train, steering and brakes must all be in good condition.

⚠ CAUTION

Use extreme caution when towing vehicles. Avoid sudden starts or erratic driving maneuvers which would place excessive stress on the emergency towing eyelets and towing cable or chain. The eyelets and towing cable or chain may break and cause serious injury or damage.

NOTICE

Use only a cable or chain specifically intended for use in towing vehicles. Securely fasten the cable or chain to the towing eyelet provided.

Before towing, release the parking brake and put the transmission in neutral (manual) or “N” (automatic). The key must be in “ACC” (engine off) or “ON” (engine running).

⚠ CAUTION

If the engine is not running, the power assist for the brakes and steering will not work so steering and braking will be much harder than usual.

—Installing towing eyelet

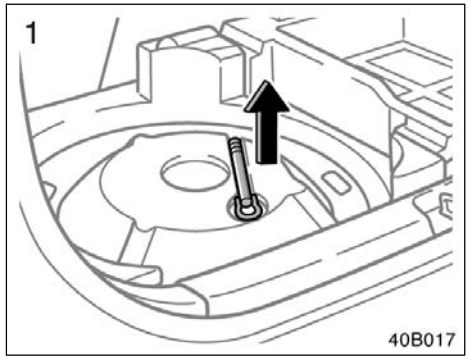

1. Remove the towing eyelet as shown in the illustration.

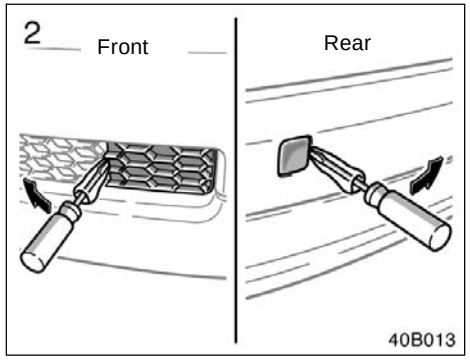

2. Remove the towing eyelet cover on the bumper using a flathead screwdriver which is wrapped with a cloth.

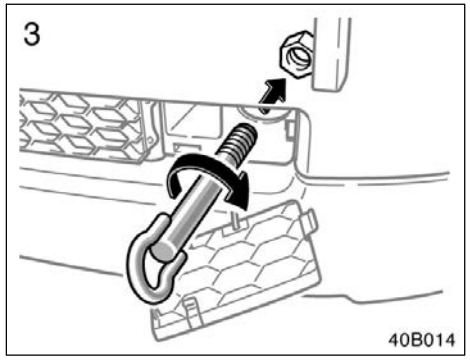

3. Secure the towing eyelet to the hole on the bumper by turning clockwise.

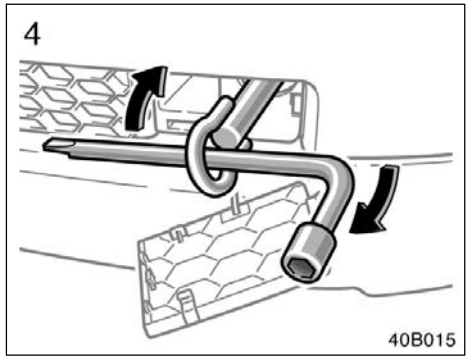

4. Tighten the towing eyelet securely by a wheel nut wrench.

⚠ CAUTION

When installing the eyelet on the vehicle, be sure to tighten the eyelet securely. If the eyelet is loose, it may come off when being towed and result in death or serious injury.

If you cannot shift automatic transmission selector lever

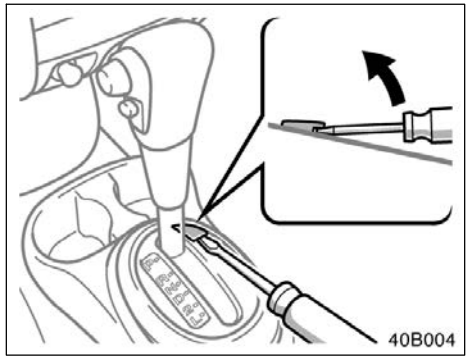

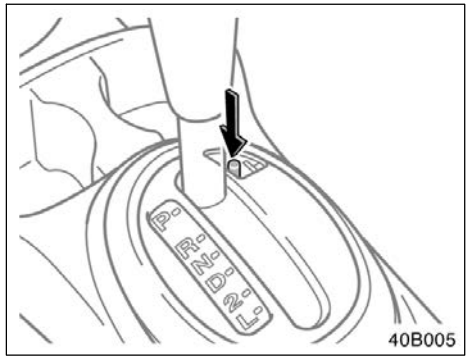

If you cannot move the selector lever out of "P" position to other positions even though the brake pedal is depressed, use the shift lock override button as follows:

1. **Turn the ignition key to "LOCK" position. Make sure the parking brake is applied.**
2. **Pry up the cover with a flathead screwdriver or equivalent.**
3. **Insert your finger into the hole to push down the shift lock override button. You can move out of "P" position only while pushing the button.**
4. **Shift into "N" position.**
5. **Insert the cover.**
6. **Start the engine. For your safety, keep the brake pedal depressed.**

Be sure to have the system checked by your Scion dealer as soon as possible.

If you lose your keys

You can purchase a new key at your Scion dealer if you can give them the key number.

See the suggestion given in "Keys" on page 8.

If your keys are locked in the vehicle and you cannot get a duplicate, many Scion dealers can still open the door for you, using their special tools. If you must break a window to get in, we suggest breaking the smallest side window because it is the least expensive to replace. Be extremely cautious to avoid cuts from the glass.

If you lose your wireless remote control transmitter

You can purchase a new wireless remote control transmitter at your Scion dealer.

Have the registered identification numbers of your transmitters deleted from your vehicle by your Scion dealer as soon as possible to avoid the possibility of theft or an accident. Then, have the identification number of your new transmitter registered. At the same time, you must bring all of the remaining transmitters to have them registered again as well.

You can use the wireless remote control system with the new transmitter. Contact your Scion dealer for detailed information.

If you cannot operate back door opener

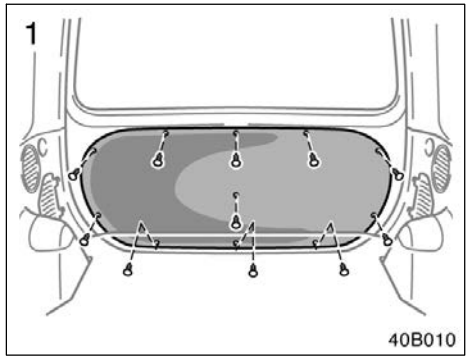

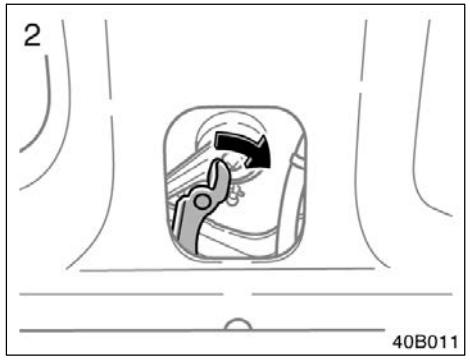

If the back door opener does not operate, you can open the back door from the inside.

To open the back door from inside, perform the following procedure.

1. Remove the cover on the back door trim.
2. Push the lever with the back door motor, open the back door.

Be sure to have the back door opener checked/repaired by your Scion dealer.

SECTION 5

CORROSION PREVENTION AND APPEARANCE CARE

Corrosion prevention and appearance care

Protecting your Scion from corrosionn 184
Washing and waxing your Scion 185
Cleaning the interior 187

Protecting your Scion from corrosion

Scion, through its diligent research, design and use of the most advanced technology available, helps prevent corrosion and provides you with the finest quality vehicle construction. Now, it is up to you. Proper care of your Scion can help ensure long–term corrosion prevention.

The most common causes of corrosion to your vehicle are:

- The accumulation of road salt, dirt and moisture in hard–to–reach areas under the vehicle.
- Chipping of paint, or undercoating caused by minor accidents or by stones and gravel.

Care is especially important if you live in particular areas or operate your vehicle under certain environmental conditions:

- Road salt or dust control chemicals will accelerate corrosion, as will the presence of salt in the air near the sea–coast or in areas of industrial pollution.
- High humidity accelerates corrosion especially when temperatures range just above the freezing point.
- Wetness or dampness to certain parts of your vehicle for an extended period of time, may cause corrosion even though other parts of the vehicle may be dry.
- High ambient temperatures can cause corrosion to those components of the vehicle which do not dry quickly due to lack of proper ventilation.

The above signifies the necessity to keep your vehicle, particularly the underside, as clean as possible and to repair any damage to paint or protective coatings as soon as possible.

To help prevent corrosion on your Scion, follow these guidelines:

Wash your vehicle frequently. It is, of course, necessary to keep your vehicle clean by regular washing, but to prevent corrosion, the following points should be observed:

- If you drive on salted roads in the winter or if you live near the ocean, you should hose off the undercarriage at least once a month to minimize corrosion.
- High pressure water or steam is effective for cleaning the vehicle's underside and wheel housings. Pay particular attention to these areas as it is difficult to see all the mud and dirt. It will do more harm than good to simply wet the mud and debris without removing. The lower edge of doors, rocker panels and frame members have drain holes which should not be allowed to clog with dirt as trapped water in these areas can cause corrosion.
- Wash the underside of the vehicle thoroughly when winter is over.

See "Washing and waxing your Scion" for more tips.

Check the condition of your vehicle's paint and trim. If you find any chips or scratches in the paint, touch them up immediately to prevent corrosion from starting. If the chips or scratches have gone through the bare metal, have a qualified body shop make the repair.

Check the interior of your vehicle. Water and dirt can accumulate under the floor mats and could cause corrosion. Occasionally check under the mats to make sure the area is dry. Be particularly careful when transporting chemicals, cleansers, fertilizers, salt, etc.; these should be transported in proper containers. If a spill or leak should occur, immediately clean and dry the area.

Use mud shields on your wheels. If you drive on salted or gravel roads, mud shields help protect your vehicle. Full–size shields, which come as near to the ground as possible, are the best. We recommend that the fittings and the area where the shields are installed be treated to resist corrosion. Your Scion dealer will be happy to assist in supplying and installing the shields if they are recommended for your area.

Keep your vehicle in a well ventilated garage or a roofed place. Do not park your vehicle in a damp, poorly ventilated garage. If you wash your vehicle in the garage, or if you drive it covered with water or snow, your garage may be so damp as to cause corrosion. Even if your garage is heated, a wet vehicle can corrode if the ventilation is poor.

Washing and waxing your Scion

Washing your Scion

Keep your vehicle clean by regular washing.

The following cases may cause weakness to the paint or corrosion to the body and parts. Wash your vehicle as soon as possible.

- When driving in a coastal area
- When driving on a road sprinkled with antifreeze
- When exposed to coal tar, tree sap, bird droppings and carcass of an insect
- When driving in areas where there is a lot of smoke, soot, dust, iron dust or chemical substances
- When the vehicle becomes remarkably dirty with dust and mud

Hand–washing your Scion

Work in the shade and wait until the vehicle body is not hot to the touch.

⚠ CAUTION

- **When cleaning under floor or chassis, be careful not to injure your hands.**
- **Exhaust gasses cause the exhaust pipe to become quite hot. When washing the vehicle, be careful not to touch the pipe until it has cooled sufficiently, as touching a hot exhaust pipe can cause burns.**

1. Rinse off loose dirt with a hose. Remove any mud or road salt from the underside of the vehicle or the wheel wells.
2. Wash with a mild car–wash soap, mixed according to the manufacturer's instructions. Use a soft cotton mitt and keep it wet by dipping it frequently into the wash water. Do not rub hard—let the soap and water remove the dirt.

Fuel filler door: Do not apply water (high–pressure car wash, for example) at or near the fuel tank inlet with the fuel filler door opened. If the water enters the air vent, you may experience trouble with refueling or rough engine idling.

Plastic bumpers: Wash carefully. Do not scrub with abrasive cleaners. The bumper faces are soft.

Exterior lights: Wash carefully. Do not use organic substances or scrub them with a hard brush. This may damage the surfaces of the lights.

Road tar: Remove with turpentine or cleaners that are marked safe for painted surfaces.

3. Rinse thoroughly—dried soap can cause streaking. In hot weather you may need to rinse each section right after you wash it.
4. To prevent water spots, dry the vehicle using a clean soft cotton towel. Do not rub or press hard—you might scratch the paint.

NOTICE

- ***Do not use organic substances (gasoline, kerosene, benzine or strong solvents), which may be toxic or cause damage.***
- ***Do not scrub any part of the vehicle with a hard brush, which may cause damage.***

Automatic car wash

Your vehicle may be washed in an automatic car wash, but remember that the paint can be scratched by some types of brushes, unfiltered washing water, or the washing process itself. Scratching reduces paint durability and gloss, especially on darker colors. The manager of the car wash should be able to advise you whether the process is safe for the paint on your vehicle.

Waxing your Scion

Polishing and waxing is recommended to maintain the original beauty of your Scion's finish.

Apply wax once a month or if the vehicle surface does not repel water well.

1. Always wash and dry the vehicle before you begin waxing, even if you are using a combined cleaner and wax.
2. Use a good quality polish and wax. If the finish has become extremely weathered, use a car–cleaning polish, followed by a separate wax. Carefully follow the manufacturer's instructions and precautions. Be sure to polish and wax the chrome trim as well as the paint.

Windshield washer nozzles: Make sure that the nozzles do not become blocked when waxing. If a nozzle becomes blocked, contact your Scion dealer to have the vehicle serviced.

NOTICE

If a nozzle becomes blocked, do not try to clear it with a pin or other object. The nozzle will be damaged.

Exterior lights: Do not apply wax on the surfaces of the lights. Wax may cause damage to the lenses. If you accidentally put wax on the light surface, wipe or wash it off.

3. Wax the vehicle again when water does not bead but remains on the surface in large patches.

Cleaning the interior

CAUTION

Do not wash the vehicle floor with water, or allow water to get onto the floor when cleaning the vehicle interior or exterior. Water may get into audio components or other electrical components above or under the vehicle carpet (or floor mat) and cause a malfunction; and it may cause body corrosion.

Vinyl interior

The vinyl upholstery may be easily cleaned with a mild soap or detergent and water.

First vacuum over the upholstery to remove loose dirt. Then, using a sponge or soft cloth, apply the soap solution to the vinyl. After allowing it to soak in for a few minutes to loosen the dirt, remove the dirt and wipe off the soap with a clean damp cloth. If all the dirt do not come off, repeat the procedure. Commercial foaming–type vinyl cleaners are also available which work well. Follow the manufacturer's instructions.

NOTICE

Do not use solvent, thinner, gasoline or window cleaner on the interior.

Carpets

Use a good foam–type shampoo to clean the carpets.

Begin by vacuuming thoroughly to remove as much dirt as possible. Several types of foam cleaners are available; some are in aerosol cans and others are powders or liquids which you mix with water to produce a foam. To shampoo the carpets, use a sponge or brush to apply the foam. Rub in overlapping circles.

Do not apply water—the best results are obtained by keeping the carpet as dry as possible. Read the shampoo instructions and follow them closely.

Seat belts

The seat belts may be cleaned with mild soap and water or with lukewarm water.

Use a cloth or sponge. As you are cleaning, check the belts for excessive wear, fraying, or cuts.

NOTICE

- ***Do not use dye or bleach on the belts—it may weaken them.***
- ***Do not use the belts until they become dry.***

Windows

The windows may be cleaned with any household window cleaner.

NOTICE

When cleaning the inside of the rear window, be careful not to scratch or damage the heater wires or connectors.

Air conditioning control panel, instrument panel, console panel, and switches

Use a soft damp cloth for cleaning.

Soak a clean soft cloth in water or lukewarm water then lightly wipe off dirt.

NOTICE

- ***Do not use organic substances (solvents, kerosene, alcohol, gasoline, etc.) or alkaline or acidic solutions. These chemicals can cause discoloring, staining or peeling of the surface.***
- ***If you use cleaners or polishing agents, make sure their ingredients do not include the substances mentioned above.***
- ***If you use a liquid car freshener, do not spill the liquid onto the vehicle's interior surfaces. It may contain the ingredients mentioned above. Immediately clean any spill using the method mentioned above.***

If you have any questions about the cleaning of your Scion, your local Scion dealer will be pleased to answer them.

SECTION 6

VEHICLE MAINTENANCE AND CARE

Vehicle maintenance and care

Maintenance requirementss 190
General maintenance 191
Does your vehicle need repairing? 193
Emissions inspection and maintenance (I/M) programs 194

For scheduled maintenance information, please refer to the “Scheduled Maintenance Guide” or “Owner’s Manual Supplement”.

Maintenance requirements

Your Scion vehicle has been designed for fewer maintenance requirements with longer service intervals to save both your time and money. However, each regular maintenance, as well as day–to–day care, is more important than ever before to ensure smooth, trouble–free, safe, and economical driving.

It is the owner's responsibility to make sure the specified maintenance, including general maintenance service, is performed. Note that both the new vehicle and emission control system warranties specify that proper maintenance and care must be performed. See "Owner's Warranty Information Booklet" or "Owner's Manual Supplement" for complete warranty information.

General maintenance

General maintenance items are those day–to–day care practices that are important to your vehicle for proper operation. It is the owner's responsibility to insure that the general maintenance items are performed regularly.

These checks or inspections can be done either by yourself or a qualified technician, or if you prefer, your Scion dealer will be pleased to do them at a nominal cost.

Scheduled maintenance

The scheduled maintenance items listed in the "Scheduled Maintenance Guide" or "Owner's Manual Supplement" are those required to be serviced at regular intervals.

For details of your maintenance schedule, read the "Scheduled Maintenance Guide" or "Owner's Manual Supplement".

It is recommended that any replacement parts used for maintenance or for the repair of the emission control system be Scion supplied.

The owner may elect to use non–Scion supplied parts for replacement purposes without invalidating the emission control system warranty. However, use of replacement parts which are not of equivalent quality may impair the effectiveness of the emission control systems.

You may also elect to have maintenance, replacement, or repair of the emission control devices and system performed by any automotive repair establishment or individual without invalidating this warranty. See "Owner's Warranty Information Booklet" or "Owner's Manual Supplement" for complete warranty information.

Where to go for service?

Scion technicians are well–trained specialists and are kept up to date with the latest service information through technical bulletins, service tips, and in–dealership training programs. They learn to work on Scions before they work on your vehicle, rather than while they are working on it.

You can be confident that your Scion dealer's service department performs the best job to meet the maintenance requirements on your vehicle—reliably and economically.

Your copy of the repair order is proof that all required maintenance has been performed for warranty coverage. If any problems should arise with your vehicle while under warranty, your Scion dealer will promptly take care of it. Again, be sure to keep a copy of the repair order for any service performed on your Scion.

What about do–it–yourself maintenance?

Many of the maintenance items are easy to do yourself if you have a little mechanical ability and a few basic automotive tools. Simple instructions for how to perform them are presented on page 195.

If you are a skilled do–it–yourself mechanic, the Scion service manuals are recommended. Please be aware that do–it–yourself maintenance can affect your warranty coverage. See “Owner’s Warranty Information Booklet” or “Owner’s Manual Supplement” for the details.

General maintenance

Listed below are the general maintenance items that should be performed as frequently as specified. In addition to checking the items listed, if you notice any unusual noise, smell or vibration, you should investigate the cause or take your vehicle to your Scion dealer or a qualified service shop immediately. It is recommended that any problem you notice be brought to the attention of your dealer or the qualified service shop for their advice.

⚠ CAUTION

Make these checks only with adequate ventilation if you run the engine.

IN THE ENGINE COMPARTMENT

Items listed below should be checked from time to time, e.g. each time when refueling.

Washer fluid
Make sure there is sufficient fluid in the tank. See page 221 for additional information.

Engine coolant level
Make sure the coolant level is between the “FULL” and “LOW” lines on the see–through reservoir when the engine is cold. See page 206 for additional information.

Radiator, condenser and hoses
Check that the front of the radiator and condenser are clean and not blocked with leaves, dirt or insects. See page 207 for additional information.

Battery electrolyte level
Make sure the electrolyte level of all battery cells is between upper and lower level lines on the case. Add only distilled water when replenishing. See page 219 for additional information.

Brake fluid level
Make sure the brake fluid level is correct. See page 207 for additional information.

Engine oil level
Check the level on the dipstick with the engine turned off and the vehicle parked on a level spot. See page 204 for additional information.

Power steering fluid level
Check the level through the reservoir. The level should be in the “HOT” or “COLD” range depending on the fluid temperature. See page 208 for additional information.

Exhaust system
If you notice any change in the sound of the exhaust or smell exhaust fumes, have the cause located and corrected immediately. (See “Engine exhaust cautions” on page 127.)

INSIDE THE VEHICLE

Items listed below should be checked regularly, e.g. while performing periodic services, cleaning the vehicle, etc.

Lights
Make sure the headlights, stop lights, tail lights, turn signal lights, and other lights are all working. Check headlight aim.

Service reminder indicators and warning buzzers
Check that all service reminder indicators and warning buzzers function properly.

Steering wheel
Check that it has specified free play. Be alert for changes in steering condition, such as hard steering or strange noise.

Seats
Check that all front seat controls such as seat adjusters, seatback recliner, etc. operate smoothly and that all latches lock securely in any position. Check that the head restraints move up and down smoothly and that the locks hold securely in any latched position. For folding–down rear seatbacks, check that the latches lock securely.

Seat belts
Check that the seat belt system such as buckles, retractors and anchors operate properly and smoothly. Make sure the belt webbing is not cut, frayed, worn or damaged.

Accelerator pedal
Check the pedal for smooth operation and uneven pedal effort or catching.

Clutch pedal
Check the pedal for smooth operation.

Brake pedal
Check the pedal for smooth operation and that the pedal has the proper clearance. Check the brake booster function.

Brakes
In a safe place, check that the brakes do not pull to one side when applied.

Parking brake
Check that the lever has the proper travel and that, on a safe incline, your vehicle is held securely with only the parking brake applied.

Automatic transmission “Park” mechanism
Check the lock release button of the selector lever for proper and smooth operation. On a safe incline, check that your vehicle is held securely with the selector lever in “P” position and all brakes released.

OUTSIDE THE VEHICLE

Items listed below should be performed from time to time, unless otherwise specified.

Fluid leaks
Check underneath for leaking fuel, oil, water or other fluid after the vehicle has been parked for a while. If you smell fuel fumes or notice any leak, have the cause found and corrected immediately.

Doors and engine hood
Check that all the side doors and back door operate smoothly and all latches lock securely. Make sure the engine hood secondary latch secures the hood from opening when the primary latch is released.

Tire inflation pressure

Check the pressure with a gauge every two weeks, or at least once a month. See page 209 for additional information.

Tire surface and wheel nuts

Check the tires carefully for cuts, damage or excessive wear. See page 211 for additional information. When checking the tires, make sure no nuts are missing, and check the nuts for looseness. Tighten them if necessary.

Tire rotation

Rotate the tires according to the maintenance schedule. (For scheduled maintenance information, please refer to the “Scheduled Maintenance Guide” or “Owner’s Manual Supplement”.) See page 213 for additional information.

Does your vehicle need repairing?

Be on the alert for changes in performance, sounds, and visual tip–offs that indicate service is needed. Some important clues are as follows:

- Engine missing, stumbling, or pinging
- Appreciable loss of power
- Strange engine noises
- A fluid leak under the vehicle (however, water dripping from the air conditioning after use is normal.)
- Change in exhaust sound (This may indicate a dangerous carbon monoxide leak. Drive with the windows open and have the exhaust system checked immediately.)
- Flat–looking tire; excessive tire squeal when cornering; uneven tire wear
- Vehicle pulls to one side when driving straight on a level road
- Strange noises related to suspension movement
- Loss of brake effectiveness; spongy feeling brake or clutch pedal; pedal almost touches floor; vehicle pulls to one side when braking
- Engine coolant temperature continually higher than normal

If you notice any of these clues, take your vehicle to your Scion dealer as soon as possible. It probably needs adjustment or repair.

⚠ CAUTION

Do not continue driving with the vehicle unchecked. It could result in serious vehicle damage and possibly personal injury.

Emissions inspection and maintenance (I/M) programs

Some states have vehicle emission inspection programs which include OBD (On–Board Diagnostics) checks.

The OBD system monitors the operation of the emission control system. When the OBD system determines that a problem exists somewhere in the emission control system, the malfunction indicator lamp comes on. In this case, your vehicle may not pass the I/M test and need to be repaired. Contact your Scion dealer to service the vehicle.

Even if the malfunction indicator lamp does not come on, your vehicle may not pass the I/M test as readiness codes have not been set in the OBD system.

Readiness codes are automatically set during ordinary driving. However, when the battery is disconnected or run down, the codes are erased. Also, depending on your driving habits, the codes may not be completely set.

Also, if the malfunction indicator lamp had come on recently due to temporary malfunction such as a loose fuel tank cap, your vehicle may not pass the I/M test.

The malfunction indicator lamp will go off after taking several driving trips, but the error code in the OBD system will not be cleared unless about 40 trips or more are taken.

If your vehicle does not pass the I/M test even the malfunction indicator lamp does not come on, contact your Scion dealer to prepare the vehicle for re–testing.

SECTION 7–1

DO–IT–YOURSELF MAINTENANCE

Introduction

Engine compartment overview 196
Fuse locations 197
Do–it–yourself service precautions 197
Parts and tools 199
Positioning the jack 200

Engine compartment overview

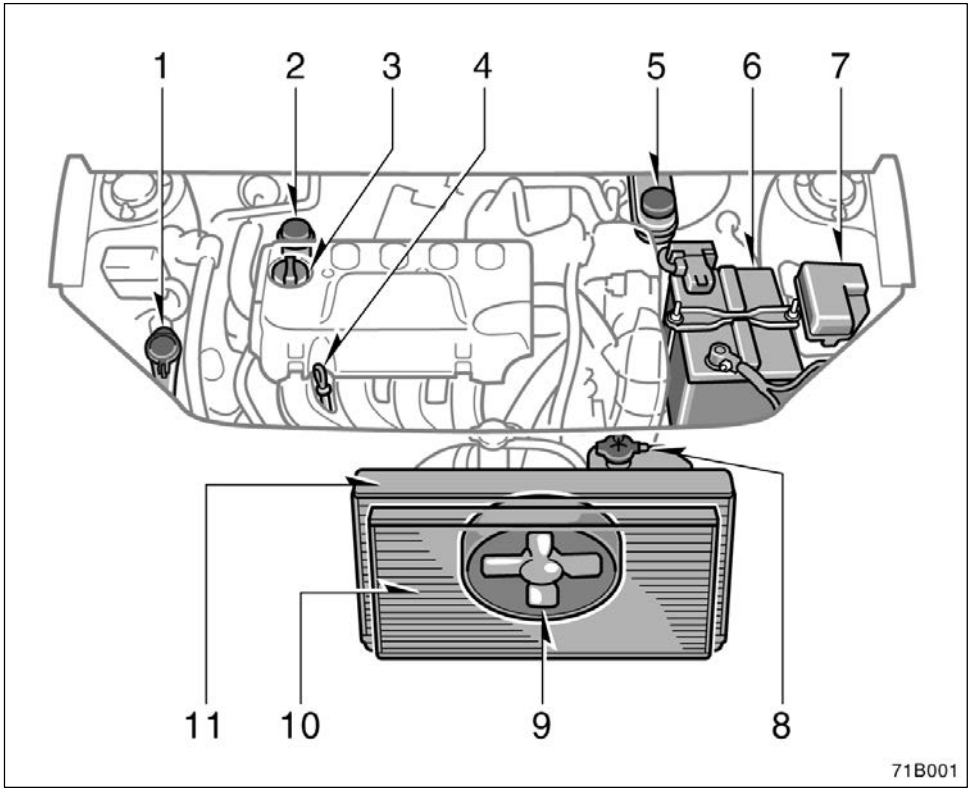

1. Windshield washer fluid tank
2. Power steering fluid reservoir
3. Engine oil filler cap
4. Engine oil level dipstick
5. Brake fluid reservoir
6. Battery
7. Fuse block
8. Engine coolant reservoir
9. Electric cooling fan
10. Condenser
11. Radiator

Fuse locations

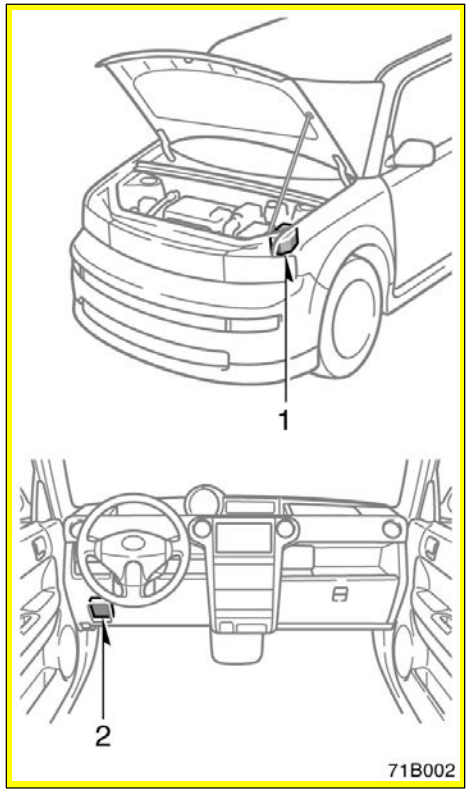

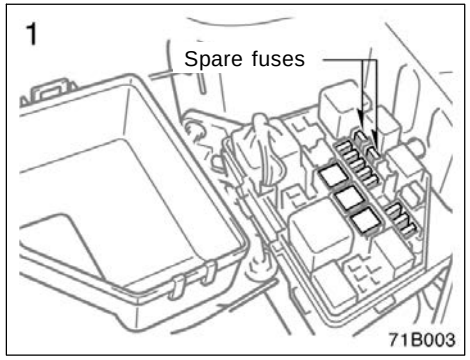

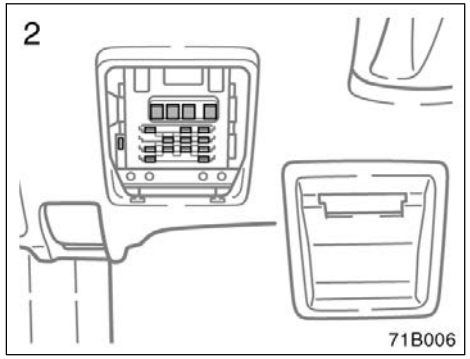

Do–it–yourself service precautions

If you perform maintenance by yourself, be sure to follow the correct procedure given in this section.

You should be aware that improper or incomplete servicing may result in operating problems.

Performing do–it–yourself maintenance during the warranty period may affect your warranty coverage. Read the separate Scion Warranty statement for details and suggestions.

This section gives instructions only for those items that are relatively easy for an owner to perform. As explained in Section 6, there are still a number of items that must be done by a qualified technician with special tools.

For information on tools and parts for do–it–yourself maintenance, see “Parts and tools” on page 199.

Utmost care should be taken when working on your vehicle to prevent accidental injury. Here are a few precautions that you should be especially careful to observe:

⚠ CAUTION

- When the engine is running, keep hands, clothing, and tools away from the moving fan and engine drive belts. (Removing rings, watches, and ties is advisable.)
- Right after driving, the engine compartment—the engine, radiator, exhaust manifold and spark plug boots, etc.—will be hot. So be careful not to touch them. Oil, fluids and spark plugs may also be hot.
- If the engine is hot, do not remove the radiator cap or loosen the drain plugs to prevent burning yourself.
- Do not leave anything that may burn easily, such as paper or rags, in the engine compartment.
- Do not smoke, cause sparks or allow open flames around fuel or the battery. Their fumes are flammable.
- Be extremely cautious when working on the battery. It contains poisonous and corrosive sulfuric acid.

- Do not get under your vehicle with just the body jack supporting it. Always use automotive jack stands or other solid supports.
- Be sure that the ignition is off if you work near the electric cooling fans or radiator grille. With the ignition on, the electric cooling fans will automatically start to run if the engine coolant temperature is high and/or the air conditioning is on.
- Use eye protection whenever you work on or under your vehicle where you may be exposed to flying or falling material, fluid spray, etc.
- Used engine oil contains potentially harmful contaminants which may cause skin disorders such as inflammation or skin cancer, so care should be taken to avoid prolonged and repeated contact with it. To remove used engine oil from your skin, wash thoroughly with soap and water.
- Do not leave used oil within the reach of children.

- Dispose of used oil and filter only in a safe and acceptable manner. Do not dispose of used oil and filter in household trash, in sewers or onto the ground. Call your dealer or a service station for information concerning recycling or disposal.
- Take care when filling the brake and clutch reservoirs because brake or clutch fluid can harm your hands or eyes. If fluid gets on your hands or in your eyes, flush the affected area with clean water immediately. If you still feel uncomfortable with your hands or eyes, go to the doctor.

NOTICE

- ***Remember that battery and ignition cables carry high currents or voltages. Be careful of accidentally causing a short circuit.***
- ***Add only "Toyota Super Long Life Coolant" or similar high quality ethylene glycol based non–silicate, non–amine, non–nitrite and non–borate coolant with long–life hybrid organic acid technology to fill the radiator. "Toyota Super Long Life Coolant" is a mixture of 50% coolant and 50% deionized water.***
- ***If you spill some of the coolant, be sure to wash it off with water to prevent it from damaging the parts or paint.***
- ***Do not allow dirt or anything else to fall through the spark plug holes.***
- ***Use only spark plugs of the specified type. Using other types will cause engine damage, loss of performance or radio noise.***
- ***Do not overfill automatic transmission fluid and power steering fluid, or the transmission and power steering could be damaged.***
- ***Do not drive with the air cleaner filter removed, or excessive engine wear could result. Also backfiring could cause a fire in the engine compartment.***
- ***Be careful not to scratch the glass surface with the wiper frame.***
- ***When closing the engine hood, check to see that you have not forgotten any tools, rags, etc.***

Parts and tools

Here is a list of parts and tools you will need to perform do–it–yourself maintenance. Remember all Scion parts are designed in metric sizes, so your tools must be metric.

CHECKING THE ENGINE OIL LEVEL

Parts (if level is low):

- "Genuine Motor Oil" or equivalent. See page 205 for details about engine oil selection.

Tools:

- Rag or paper towel
- Funnel (only for adding oil)

CHECKING THE ENGINE COOLANT LEVEL

Parts (if level is low):

- "Toyota Super Long Life Coolant" or similar high quality ethylene glycol based non–silicate, non–amine, non–nitrite, and non–borate coolant with long–life hybrid organic acid technology.
  "Toyota Super Long Life Coolant" is a mixture of 50% coolant and 50% deionized water.

Tools:

- Funnel (only for adding coolant)

CHECKING BRAKE FLUID

Parts (if level is low):
- SAE J1703 or FMVSS No.116 DOT 3 brake fluid

Tools:
- Rag or paper towel
- Funnel (only for adding fluid)

CHECKING POWER STEERING FLUID

Parts (if level is low):
- Automatic transmission fluid DEXRON®II or III

Tools:
- Rag or paper towel
- Funnel (only for adding fluid)

CHECKING BATTERY CONDITION

Tools:
- Warm water
- Baking soda
- Grease
- Conventional wrench (for terminal clamp bolts)

CHECKING AND REPLACING FUSES

Parts (if replacement is necessary):
- Fuse or equivalent with same amperage rating as original

ADDING WASHER FLUID

Parts:
- Water
- Washer fluid containing antifreeze (for winter use)

Tools:
- Funnel (only for adding washer fluid)

REPLACING LIGHT BULBS

Parts:
- Bulb with same number and wattage rating as original (See the table in “Replacing light bulbs” on page 221.)

Positioning the jack

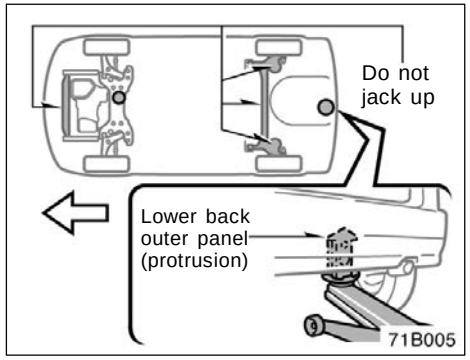

When jacking up your vehicle with the jack, position the jack correctly as shown in the illustration.

Jack position . . . . . .

Front—Front suspension member
Rear—Lower back outer panel

⚠ CAUTION

When jacking, be sure to observe the following to reduce the possibility of personal injury:

- **Follow jacking instructions.**
- **Do not put any part of your body under the vehicle supported by a jack. Personal injury may occur.**
- **Do not start or run the engine while your vehicle is supported by the jack.**
- **Stop the vehicle on a level firm ground, firmly set the parking brake and put the transmission in "P" (automatic) or reverse (manual). Block the wheel diagonally opposite to the one being changed if necessary.**
- **Make sure to set the jack properly in the jack point. Raising the vehicle with jack improperly positioned will damage the vehicle or may allow the vehicle to fall off the jack and cause personal injury.**
- **Never get under the vehicle when the vehicle is supported by the jack alone; use vehicle support stands.**
- **Do not raise the vehicle with someone in the vehicle.**
- **When raising the vehicle, do not place any objects on top of or underneath the jack.**

NOTICE

Make sure to place the jack correctly, or your vehicle may be damaged.

SECTION 7-2

DO-IT-YOURSELF MAINTENANCE

Engine and Chassis

Checking the engine oil level 204
Checking the engine coolant level 206
Checking the radiator and condenser 207
Checking brake fluid 207
Checking power steering fluid 208
Checking tire inflation pressure 209
Checking and replacing tires 211
Rotating tires 213
Installing snow tires and chains 214
Replacing wheels 215

Checking the engine oil level

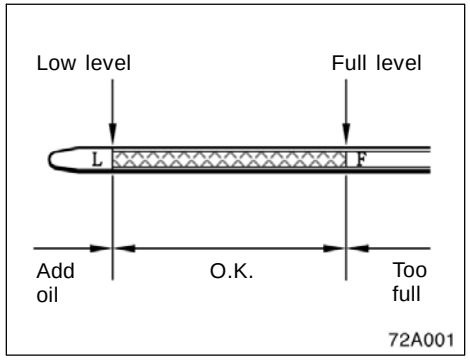

With the engine at operating temperature and turned off, check the oil level on the dipstick.

1. To get a correct reading, the vehicle should be on level ground. After turning off the engine, wait a few minutes for the oil to drain back into the bottom of the engine.
2. Pull the dipstick out, hold a rag under the end and wipe it clean.
3. Reinsert the dipstick—Push it in as far as it will go, or the reading will not be correct.
4. Pull the dipstick out and look at the oil level while holding a rag under the end.

⚠ CAUTION

Be careful not to touch the hot exhaust manifold.

NOTICE

Be careful not to drop engine oil on the vehicle components.

If the oil level is below or only slightly above the low level, add engine oil of the same type as already in the engine.

Remove the oil filler cap and add engine oil in small quantities at a time, checking the dipstick. We recommend that you use a funnel when adding oil.

The approximate quantity of oil needed to raise the level between low and full on the dipstick is indicated as follows:

1.5 L (1.6 qt., 1.3 Imp.qt.)

When the level reaches within the correct range, install the filler cap hand–tight.

For the engine oil capacity, see “Service specifications” on page 229.

NOTICE

- ***Be careful not to spill engine oil on the vehicle components.***
- ***Avoid overfilling, or the engine could be damaged.***
- ***Check the oil level on the dipstick once again after adding the oil.***

ENGINE OIL SELECTION

“Genuine Motor Oil” is used in your Scion vehicle. Use Scion approved “Genuine Motor Oil” or equivalent to satisfy the following grade and viscosity.

Oil grade:

ILSAC multigrade engine oil.

Recommended viscosity:

SAE 5W–30

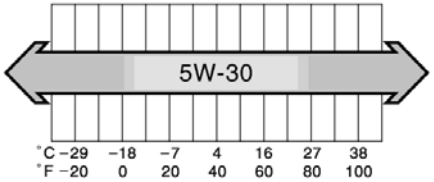

Outside temperature

OIL008

SAE 5W–30 is the best choice for good fuel economy, and good starting in cold weather.

If SAE 5W–30 oil is not available, SAE 10W–30 oil may be used. However, it should be replaced with SAE 5W–30 at the next oil change.

API-02

Oil identification mark

The ILSAC (International Lubricant Standardization and Approval Committee) Certification Mark is added to some oil containers to help you select the oil you should use..

To ensure excellent lubrication performance for your engine, “Genuine Motor Oil” is available, which has been specifically tested and approved for all Scion engines.

Please contact your Scion dealer for further details about “Genuine Motor Oil”.

Checking the engine coolant level

Look at the see–through coolant reservoir when the engine is cold. The coolant level is satisfactory if it is between the "FULL" and "LOW" lines on the reservoir. If the level is low, add the coolant. (For the coolant type, see "Coolant type selection" described below.)

The coolant level in the reservoir will vary with engine temperature. However, if the level is on or below the "LOW" line, add coolant. Bring the level up to the "FULL" line.

If the coolant level drops within a short time after replenishing, there may be a leak in the system. Visually check the radiator, hoses, engine coolant filler cap, radiator cap and drain cock and water pump.

If you can find no leak, have your Scion dealer test the cap pressure and check for leaks in the cooling system.

⚠ CAUTION

To prevent burning yourself, do not remove the radiator cap when the engine is hot.

Coolant type selection

Use of improper coolants may damage your engine cooling system.

Only use "Toyota Super Long Life Coolant" or similar high quality ethylene glycol based non–silicate, non–amine, non–nitrite, and non–borate coolant with long–life hybrid organic acid technology. (Coolant with long–life hybrid organic acid technology is a combination of low phosphates and organic acids.)

"Toyota Super Long Life Coolant" is a mixture of 50% coolant and 50% deionized water. This coolant provides protection down to about –35°C (–31°F).

NOTICE

Do not use plain water alone.

Scion recommends "Toyota Super Long Life Coolant", which has been tested to ensure that it will not cause corrosion nor result in malfunction of your engine coolant system with proper usage. "Toyota Super Long Life Coolant" is formulated with long–life hybrid organic acid technology and has been specifically designed to avoid engine cooling system malfunction on Scion vehicles.

Please contact your Scion dealer for further details.

Checking the radiator and condenser

If either of the above parts are extremely dirty or you are not sure of their condition, take your vehicle to a Scion dealer.

⚠ CAUTION

To prevent burning yourself, be careful not to touch the radiator or condenser when the engine is hot.

NOTICE

To prevent damage to the radiator and condenser, do not perform the work by yourself.

Checking brake fluid

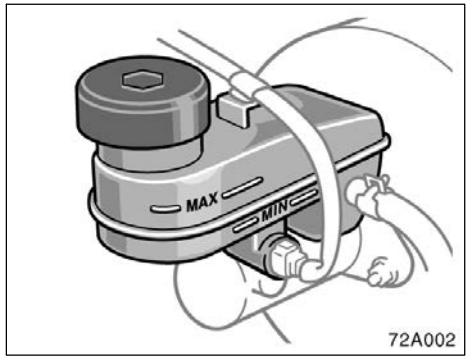

To check the fluid level, simply look at the see–through reservoir. The level should be between the "MAX" and "MIN" lines on the reservoir.

It is normal for the brake fluid level to go down slightly as the brake pads wear. So be sure to keep the reservoir filled.

If the reservoir needs frequent refilling, it may indicate a serious mechanical problem.

If the level is low, add SAE J1703 or FMVSS No.116 DOT 3 brake fluid to the brake reservoir.

Remove and replace the reservoir cap by hand. Fill the brake fluid up to the "MAX" line. This brings the fluid to the correct level when you put the cap back on.

Use only newly opened brake fluid. Once opened, brake fluid absorbs moisture from the air, and excess moisture can cause a dangerous loss of braking.

⚠ CAUTION

Take care when filling the reservoir because brake fluid can harm your hands or eyes. If fluid gets on your hands or in your eyes, flush the affected area with clean water immediately. If you still feel uncomfortable with your hands or eyes, go to the doctor.

NOTICE

If you spill some of the fluid, be sure to wipe it off to prevent it from damaging the parts or paintwork.

Checking power steering fluid

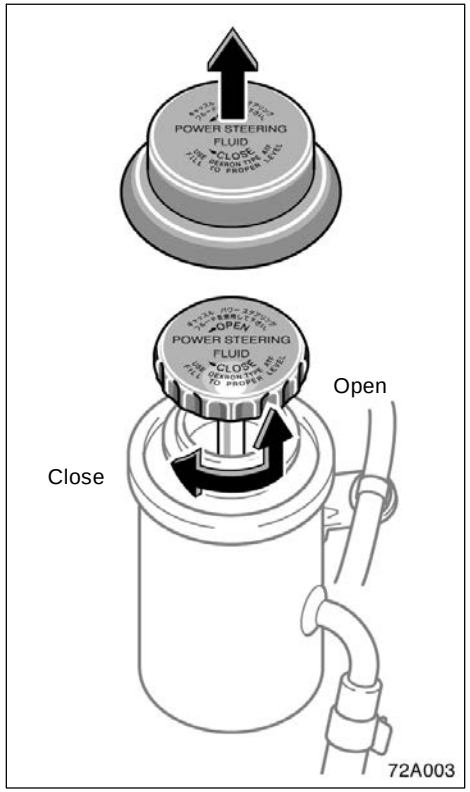

Check the fluid level through the reservoir. If necessary, add automatic transmission fluid DEXRON®II or III.

If the vehicle has been driven around 80 km/h (50 mph) for 20 minutes (a little more in frigid temperatures), the fluid is hot (60°C–80°C or 140°F–175°F). You may also check the level when the fluid is cold (about room temperature, 10°C–30°C or 50°F–85°F) if the engine has not been run for about five hours.

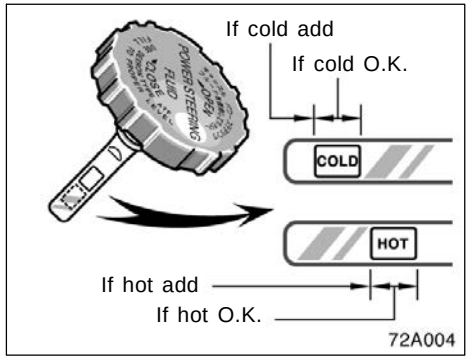

1. Clean all dirt from outside of the reservoir tank.
2. Remove the rubber cap.
3. Remove the reservoir cap by turning it counterclockwise and wipe the dipstick clean.
4. Reinstall the reservoir cap.
5. Remove the reservoir cap again and look at the fluid level. If the fluid is cold, the level should be in the “COLD” range on the dipstick. Similarly, if it is hot, the fluid level should be in the “HOT” range. If the level is at the low side of either range, add automatic transmission fluid DEXRON®II or III to bring the level within the range.

6. After replacing the reservoir cap and rubber cap, visually check the steering box case, vane pump and hose connections for leaks or damage.

⚠ CAUTION

The reservoir tank may be hot so be careful not to burn yourself.

NOTICE

Avoid overfilling, or the power steering could be damaged.

Checking tire inflation pressure

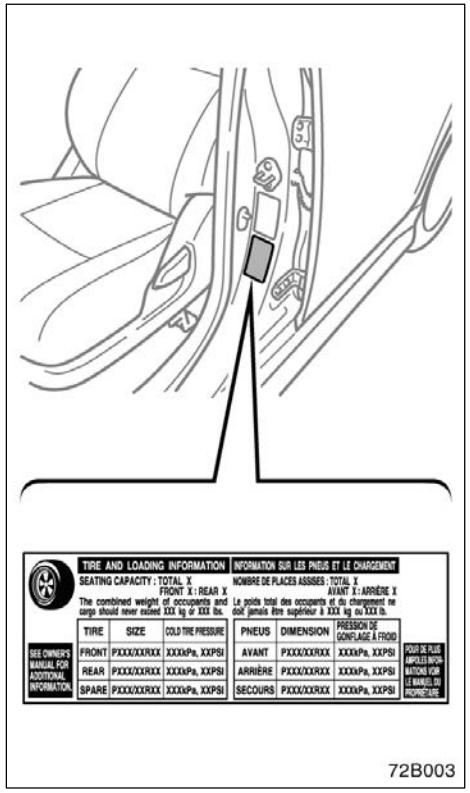

Keep your tire inflation pressures at the proper level.

The recommended cold tire inflation pressures, tire sizes and the combined weight of occupants and cargo (vehicle capacity weight) are described on page 228 and 231. They are also described on the tire and loading information label as shown.

You should check the tire inflation pressures every two weeks, or at least once a month. And do not forget the spare!

The following instructions for checking tire inflation pressure should be observed:

- **The pressure should be checked only when the tires are cold.** If your vehicle has been parked for at least 3 hours and has not been driven for more than 1.5 km or 1 mile since, you will get an accurate cold tire inflation pressure reading.

- **Always use a tire pressure gauge.** The appearance of a tire can be misleading. Besides, tire inflation pressures that are even just a few pounds off can degrade ride and handling.
- **Take special care when adding air to the compact spare tire.** The smaller tire size can gain pressure very quickly. Add compressed air in small quantities and check the pressure often until it reaches the specified pressure.
- **Do not bleed or reduce tire inflation pressure after driving.** It is normal for the tire inflation pressure to be higher after driving.
- **Never exceed the vehicle capacity weight.** Passenger and luggage weight should be located so that the vehicle is balanced.

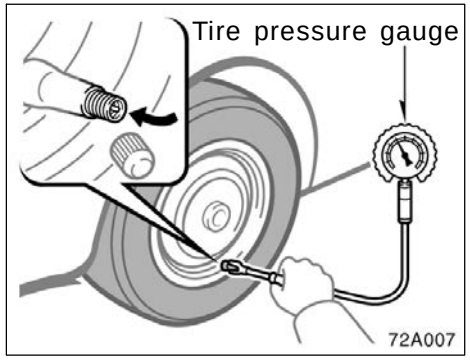

INSPECTION AND ADJUSTMENT PROCEDURE

1. Remove the tire valve cap.
2. Press the tip of the tire pressure gauge to the tire valve.
3. Read the pressure using the graduations of the gauge.
4. In case the tire inflation pressure is not within the prescribed range, insert the compressed air from the valve. In case of applying too much air, press the center of the valve and release the air to adjust.
5. After completing the tire inflation pressure measurement and adjustment, apply soapy water to the valve and check for leakage.
6. Install the tire valve cap.

If a gauge and air pump are not available, have your vehicle checked by your Scion dealer.

⚠ CAUTION

Be sure to reinstall the tire valve caps. Without the valve caps, dirt or moisture could get into the valve core and cause air leakage. If the caps have been lost, have new ones put on as soon as possible.

Incorrect tire inflation pressure may waste fuel, reduce the comfort of driving, reduce tire life and make your vehicle less safe to drive.

If a tire frequently needs refilling, have it checked by your Scion dealer.

⚠ CAUTION

Keep your tires properly inflated. Otherwise, the following conditions may occur and cause an accident resulting in death or serious injuries.

Low tire pressure (underinflation)—

- **Excessive wear**
- **Uneven wear**
- **Poor handling**
- **Possibility of blowouts from an overheated tire**
- **Poor sealing of the tire bead**
- **Wheel deformation and/or tire separation**
- **A greater possibility of tire damage from road hazards**

High tire pressure (overinflation)—

- **Poor handling**
- **Excessive wear**
- **Uneven wear**
- **A greater possibility of tire damage from road hazards**

Checking and replacing tires

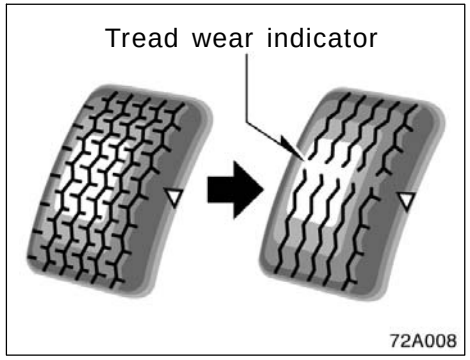

CHECKING YOUR TIRES

Check the tire's tread for tread wear indicators. If the indicators show, replace the tires. The location of tread wear indicators is shown by the "TWI" or "Δ" marks, etc., molded on the sidewall of each tire.

The tires on your Scion have built–in tread wear indicators to help you know when the tires need replacement. When the tread depth wears to 1.6 mm (0.06 in.) or less, the indicators will appear. If you can see the indicators in two or more adjacent grooves, the tire should be replaced. The lower the tread, the higher the risk of skidding.

The effectiveness of snow tires is lost if the tread wears down below 4 mm (0.16 in.).

If you have tire damage such as cuts, splits, cracks deep enough to expose the fabric, or bulges indicating internal damage, the tire should be replaced.

If a tire often goes flat or cannot be properly repaired due to the size or location of a cut or other damage, it should be replaced. If you are not sure, consult with your Scion dealer.

If air loss occurs while driving, do not continue driving. Driving even a short distance can damage a tire beyond repair.

Any tires which are over 6 years old must be checked by a qualified technician even if damage is not obvious.

Tires deteriorate with age even if they have never or seldom been used.

This applies also to the spare tire and tires stored for future use.

REPLACING YOUR TIRES

When replacing a tire, use a tire of the same size and construction, and the same or greater maximum load as the originally installed tires.

Using any other size or type of tire may seriously affect handling, ride, speedometer/odometer calibration, ground clearance, and clearance between the body and tires or snow chains.

Check that the maximum load of the replaced tire is greater than 1/2 of the Gross Axle Weight Ratings (GAWR) of either the front axle or the rear axle, whichever is greater. As for the maximum load of the tire, see the load limit at maximum cold tire inflation pressure mentioned on the sidewall of the tire, and as for the Gross Axle Weight Ratings (GAWR), see the Certification Label. For details about the sidewall of the tire and the Certification Label, see pages 135 and 133.

⚠ CAUTION

Observe the following instructions. Otherwise, an accident may occur resulting in death or serious injuries.

- **Do not mix radial, bias belted, or bias−ply tires on your vehicle, as this may cause dangerous handling characteristics resulting in loss of control.**
- **Do not use tires other than the manufacturer's recommended size, as this may cause dangerous handling characteristics resulting in loss of control.**

Scion recommends all four tires, or at least both of the front or rear tires be replaced at a time as a set.

See "If you have a flat tire" on page 164 for tire change procedure.

When a tire is replaced, the wheel should always be balanced.

An unbalanced wheel may affect vehicle handling and tire life. Wheels can get out of balance with regular use and should therefore be balanced occasionally.

When replacing a tubeless tire, the air valve should also be replaced with a new one.

Rotating tires

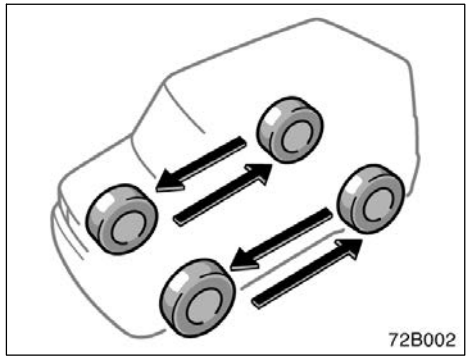

To equalize the wear and help extend tire life, Scion recommends that you rotate your tires according to the maintenance schedule. (For scheduled maintenance information, please refer to the "Scheduled Maintenance Guide" or "Owner's Manual Supplement".) However, the most appropriate timing for tire rotation may vary according to your driving habits and road surface conditions.

See "If you have a flat tire" on page 164 for tire change procedure.

When rotating tires, check for uneven wear and damage. Abnormal wear is usually caused by incorrect tire inflation pressure, improper wheel alignment, out–of–balance wheels, or severe braking.

⚠ CAUTION

Do not include a compact spare tire when rotating the tires. It is designed for temporary use only.

Installing snow tires and chains

WHEN TO USE SNOW TIRES OR CHAINS

Snow tires or chains are recommended when driving on snow or ice.

On wet or dry roads, conventional tires provide better traction than snow tires.

SNOW TIRE SELECTION

If you need snow tires, select tires of the same size, construction and load capacity as the originally installed tires.

Do not use tires other than those mentioned above. Do not install studded tires without first checking local regulations for possible restrictions.

⚠ CAUTION

Observe the following instructions. Otherwise, an accident may occur resulting in death or serious injuries.

Do not use snow tires other than the manufacturer's recommended size, as this may cause dangerous handling characteristics resulting in loss of control.

SNOW TIRE INSTALLATION

Snow tires should be installed on all wheels.

Installing snow tires on the front wheels only can lead to an excessive difference in road grip capability between the front and rear tires which could cause loss of vehicle control.

When storing removed tires you should store them in a cool dry place.

Mark the direction of rotation and be sure to install them in the same direction when replacing.

⚠ CAUTION

- **Do not drive with the snow tires incorrectly inflated.**
- **Never drive over 120 km/h (75 mph) with any type of snow tires.**

TIRE CHAIN SELECTION

Use the tire chains of correct size and type.

Use SAE Class “S” type radial tire chains except radial cable chains or V–bar type chains.

Regulations regarding the use of tire chains vary according to location or type of road, so always check local regulations before installing chains.

CHAIN INSTALLATION

Install the chains on the front tires as tightly as possible. Do not use tire chains on the rear tires. Retighten chains after driving 0.5 – 1.0 km (1/4 – 1/2 mile).

When installing chains on your tires, carefully follow the instructions of the chain manufacturer.

If wheel covers are used, they will be scratched by the chain band, so remove the covers before putting on the chains.

⚠ CAUTION

- **Do not exceed 50 km/h (30 mph) or the chain manufacturer’s recommended speed limit, whichever is lower.**
- **Drive carefully avoiding bumps, holes, and sharp turns, which may cause the vehicle to bounce.**
- **Avoid sharp turns or locked–wheel braking, as use of chains may adversely affect vehicle handling.**
- **When driving with chains installed, be sure to drive carefully. Slow down before entering curves to avoid losing control of the vehicle. Otherwise an accident may occur.**

NOTICE

Do not attempt to use a tire chain on the compact spare tire, as it may result in damage to the vehicle as well as the tire.

Replacing wheels

WHEN TO REPLACE YOUR WHEELS

If you have wheel damage such as bending, cracks or heavy corrosion, the wheel should be replaced.

If you fail to replace damaged wheels, the tire may slip off the wheel or cause loss of handling control.

WHEEL SELECTION

When replacing wheels, care should be taken to ensure that the wheels are replaced by ones with the same load capacity, diameter, rim width, and offset.

This must be observed on compact spare tires, too.

Correct replacement wheels are available at your Scion dealer.

A wheel of a different size or type may adversely affect handling, wheel and bearing life, brake cooling, speedometer/odometer calibration, stopping ability, headlight aim, bumper height, vehicle ground clearance, and tire or snow chain clearance to the body and chassis.

Replacement with used wheels is not recommended as they may have been subjected to rough treatment or high mileage and could fail without warning. Also, bent wheels which have been straightened may have structural damage and therefore should not be used. Never use an inner tube in a leaking wheel which is designed for a tubeless tire.

⚠ CAUTION

Observe the following instructions. Otherwise, an accident may occur resulting in death or serious injuries.

Do not use wheels other than the manufacturer's recommended size, as this may cause dangerous handling characteristics resulting in loss of control.

SECTION 7-3

DO-IT-YOURSELF MAINTENANCE

Electrical components

Checking battery condition 218
Battery recharging precautions 219
Checking and replacing fuses 220
Adding washer fluid 221
Replacing light bulbs 221

Checking battery condition—
—Precautions

⚠ CAUTION

BATTERY PRECAUTIONS

The battery produces flammable and explosive hydrogen gas.

- **Do not cause a spark from the battery with tools.**
- **Do not smoke or light a match near the battery.**

The electrolyte contains poisonous and corrosive sulfuric acid.

- **Avoid contact with eyes, skin or clothes.**
- **Never ingest electrolyte.**
- **Wear protective safety glasses when working near the battery.**
- **Keep children away from the battery.**

EMERGENCY MEASURES

- **If electrolyte gets in your eyes, flush your eyes with clean water immediately and get immediate medical attention. If possible, continue to apply water with a sponge or cloth while en route to the medical office.**
- **If electrolyte gets on your skin, thoroughly wash the contact area. If you feel pain or burning, get medical attention immediately.**
- **If electrolyte gets on your clothes, there is a possibility of its soaking through to your skin, so immediately take off the exposed clothing and follow the procedure above, if necessary.**
- **If you accidentally swallow electrolyte, drink a large quantity of water or milk. Follow with milk of magnesia, beaten raw egg or vegetable oil. Then go immediately for emergency help.**

—Checking battery exterior

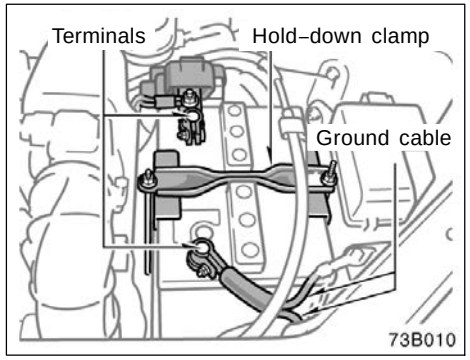

Check the battery for corroded or loose terminal connections, cracks, or loose hold–down clamp.

a. If the battery is corroded, wash it off with a solution of warm water and baking soda. Coat the outside of the terminals with grease to prevent further corrosion.

b. If the terminal connections are loose, tighten their clamp nuts—but do not overtighten.

c. Tighten the hold–down clamp only enough to keep the battery firmly in place. Overtightening may damage the battery case.

NOTICE

- ***Be sure the engine and all accessories are off before performing maintenance.***
- ***When checking the battery, remove the ground cable from the negative terminal ("–" mark) first and reinstall it last.***
- ***Be careful not to cause a short circuit with tools.***
- ***Take care no solution gets into the battery when washing it.***

—Checking battery condition

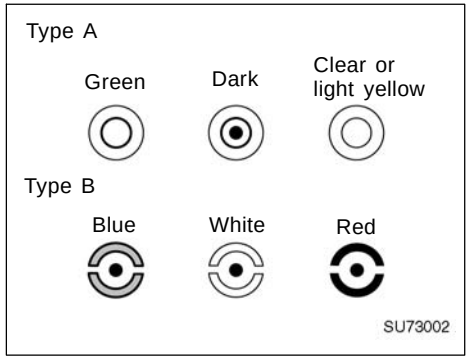

CHECKING BY THE INDICATOR

Check the battery condition by the indicator color.

Indicator color		Condition
Type A	Type B	
GREEN	BLUE	Good
DARK	WHITE	Charging necessary. Have battery checked by your Scion dealer.
CLEAR or LIGHT YELLOW	RED	Have battery checked by your Scion dealer.

Battery recharging precautions

During recharging, the battery is producing hydrogen gas.

Therefore, before recharging:

1. If recharging with the battery installed on the vehicle, be sure to disconnect the ground cable.
2. Be sure the power switch on the recharger is off when connecting the charger cables to the battery and when disconnecting them.

⚠ CAUTION

- **Always charge the battery in an unconfined area. Do not charge the battery in a garage or closed room where there is not sufficient ventilation.**
- **Only do a slow charge (5A or less). Charging at a quicker rate is dangerous. The battery may explode, causing personal injuries.**

NOTICE

Never recharge the battery while the engine is running. Also, be sure all accessories are turned off.

Checking and replacing fuses

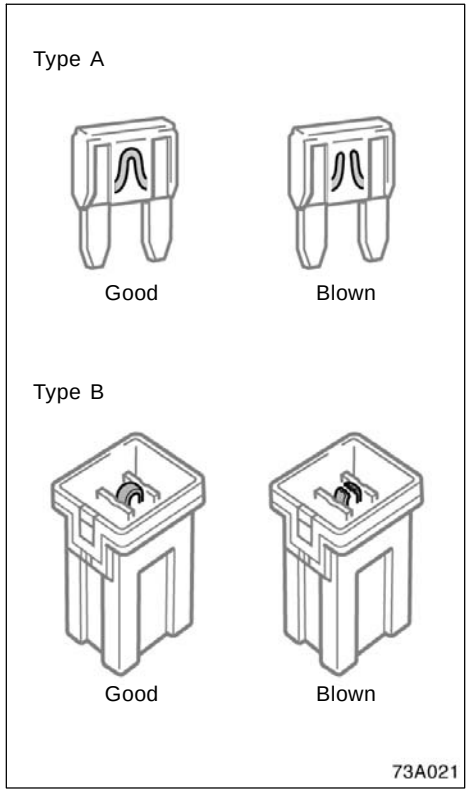

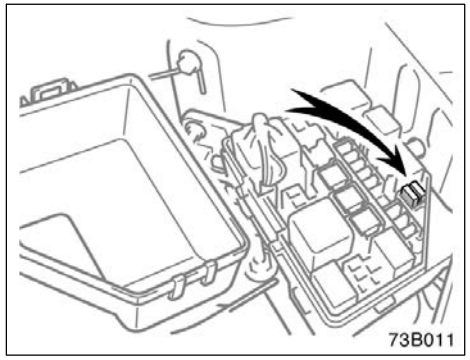

If the headlights or other electrical components do not work, check the fuses. If any of the fuses are blown, they must be replaced.

See “Fuse locations” on page 197 for locations of the fuses.

Turn the ignition switch and inoperative component off. Pull the suspected fuse straight out and check it.

Determine which fuse may be causing the problem. The lid of the fuse box shows the name of the circuit for each fuse. See page 232 for the functions controlled by each circuit.

Type A fuses can be pulled out by the pull–out tool. The location of the pull–out tool is shown in the illustration.

If you are not sure whether the fuse has blown, try replacing the suspected fuse with one that you know is good.

If the fuse has blown, push a new fuse into the clip.

Only install a fuse with the amperage rating designated on the fuse box lid.

If you do not have a spare fuse, in an emergency you can pull out the “A.C” fuse, which may be dispensable for normal driving, and use it if its amperage rating is the same.

If you cannot use one of the same amperage, use one that is lower, but as close to the rating as possible. If the amperage is lower than that specified, the fuse might blow out again but this does not indicate anything wrong. Be sure to get the correct fuse as soon as possible and return the substitute to its original clip.

It is a good idea to purchase a set of spare fuses and keep them in your vehicle for emergencies.

If the new fuse immediately blows out, there is a problem with the electrical system. Have your Scion dealer correct it as soon as possible.

⚠ CAUTION

Never use a fuse with a higher amperage rating, or any other object, in place of a fuse. This may cause extensive damage and possibly a fire.

Adding washer fluid

If any washer does not work, the washer tank may be empty. Add washer fluid.

You may use plain water as washer fluid. However, in cold areas where temperatures range below the freezing point, use washer fluid containing antifreeze. This product is available at your Scion dealer and most auto parts stores. Follow the manufacturer's directions for how much to mix with water.

NOTICE

Do not use engine antifreeze or any other substitute because it may damage your vehicle's paint.

Replacing light bulbs—

The following illustrations show how to gain access to the bulbs. When replacing a bulb, make sure the ignition switch and light switch are off. Use bulbs with the wattage ratings given in the table.

⚠ CAUTION

- **To prevent burning yourself, do not replace the light bulbs while they are hot.**
- **Halogen bulbs have pressurized gas inside and require special handling. They can burst or shatter if scratched or dropped. Hold a bulb only by its plastic or metal case. Do not touch the glass part of a bulb with bare hands.**

NOTICE

Only use a bulb of the listed type.

The inside of the lens of exterior lights such as headlights may temporarily fog up when the lens becomes wet in the rain or in a car wash. This is not a problem because the fogging is caused by the temperature difference between the outside and inside of the lens, just like the windshield fogs up in the rain. However, if there is a large drop of water on the inside of the lens, or if there is water pooled inside the light, contact your Scion dealer.

Light bulbs	Bulb No.	W	Type
Headlights	HB2	60/55	A
Parking and front side marker/front turn signal lights	1157NA	8/27	B
Side turn signal lights	—	5	D
Rear turn signal lights	7440–A	21	D
Stop/tail lights	7443	21/5	C
Back–up lights	7440	21	C
License plate lights	—	5	C
High mounted stoplight	921	16	C
Interior light	—	8	E

A: HB2 halogen bulbs
B: Single end bulbs (amber)
C: Wedge base bulbs (clear)
D: Wedge base bulbs (amber)
E: Double end bulbs

—Headlights

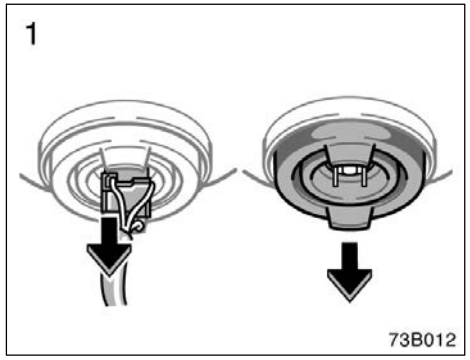

1. Unplug the connector. Remove the rubber cover.

If the connector is tight, wiggle it.

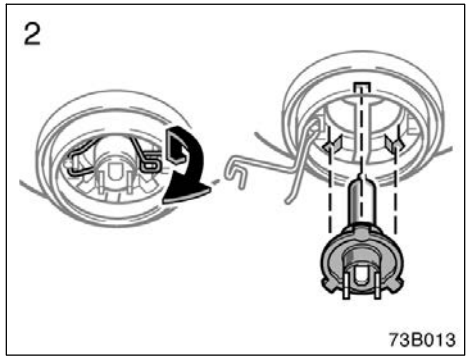

2. Release the bulb retaining spring and remove the bulb. Install a new bulb and the bulb retaining spring.

To install a bulb, align the tabs of the bulb with the cutouts of the mounting hole.

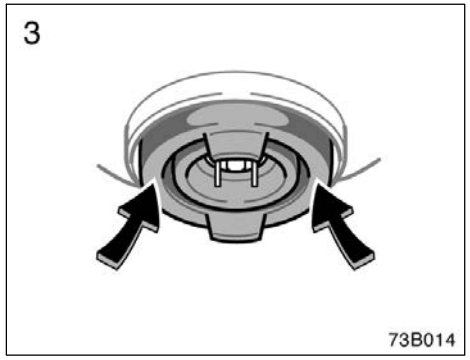

3. Install the rubber cover as shown and fit it securely on the boss. Plug in the connector.

Make sure the rubber cover fits securely on the connector and the headlight body.

Aiming is not necessary after replacing the bulb. When aiming adjustment is necessary, contact your Scion dealer.

—Parking and front side marker/front turn signal lights

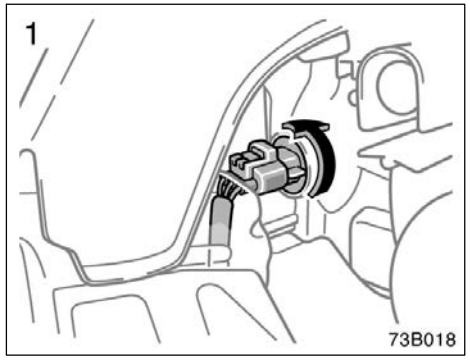

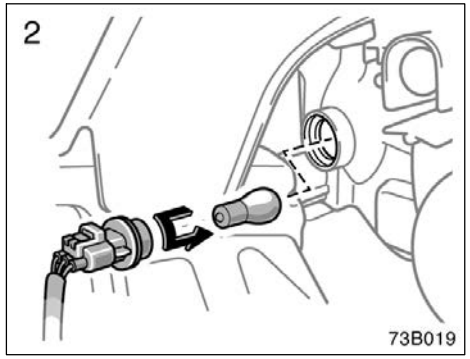

—Side turn signal lights

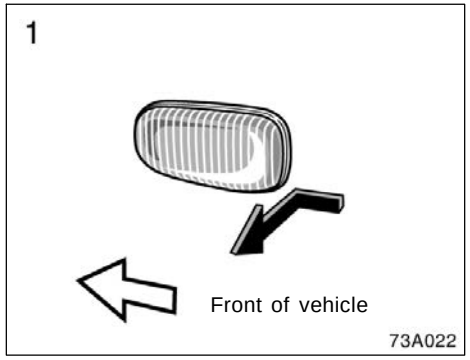

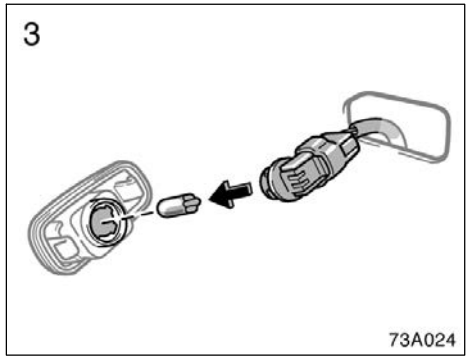

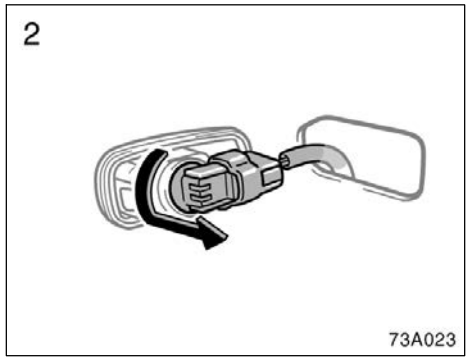

—Stop/tail, rear turn signal, back–up lights

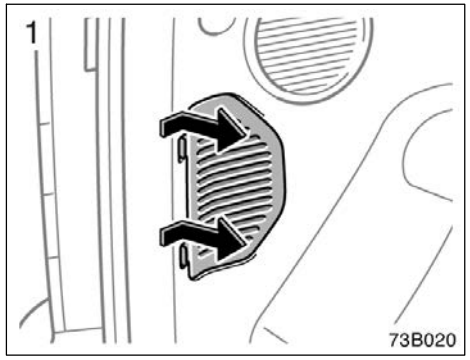

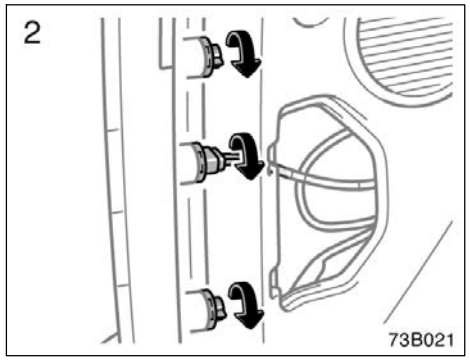

—License plate lights

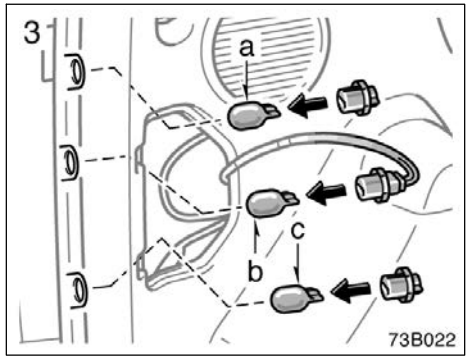

a: Stop/tail light
b: Rear turn signal light
c: Back–up light

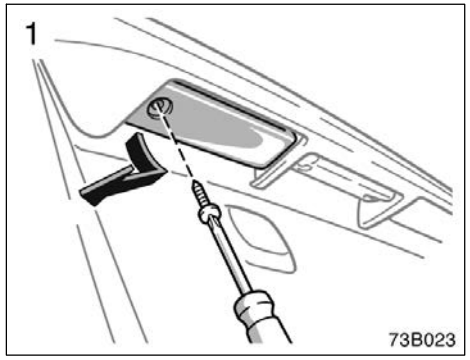

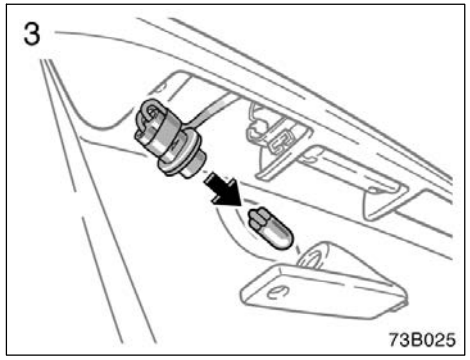

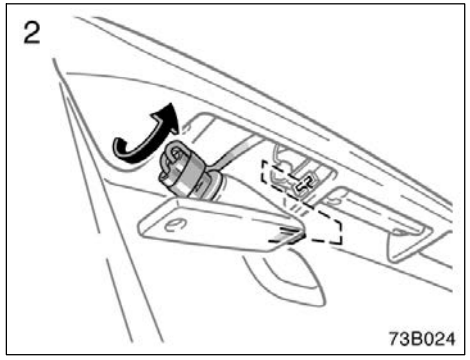

—High mounted stoplight

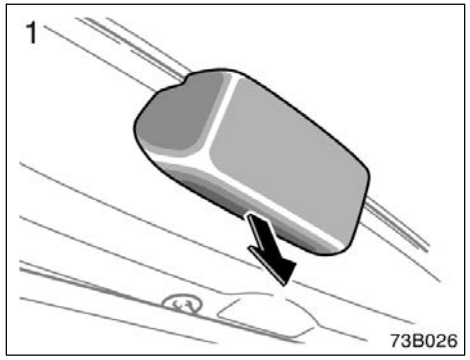

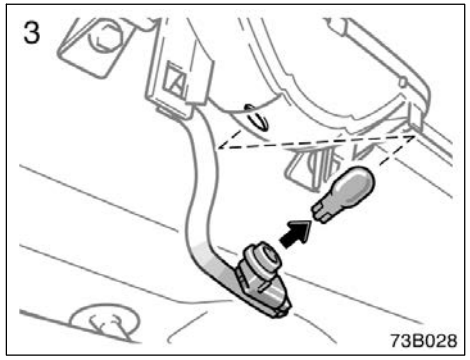

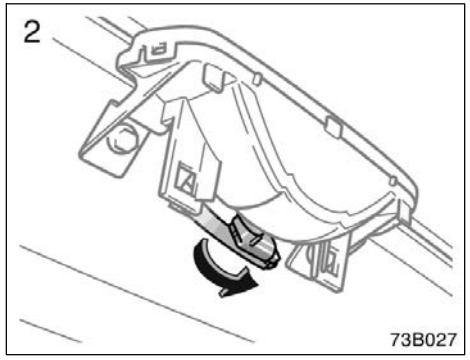

SECTION 8

SPECIFICATIONS

Specifications

Dimensions and weightss 228
Engine 228
Fuel 228
Service specifications 229
Tires 231
Fuses 232

Dimensions and weights

Overall length mm (in.):
3945 (155.3)

Overall width mm (in.):
1690 (66.5)

Overall height mm (in.):
1640 (64.6)

Wheelbase mm (in.):
2500 (98.4)

Front tread mm (in.):
1455 (57.3)

Rear tread mm (in.):
1430 (56.3)

Vehicle capacity weight (occupants+cargo) kg(lb.):
375 (825)

Engine

Model:
1.5L 4–cylinder (1NZ–FE)

Type:
4 cylinder in line, 4 cycle, gasoline

Bore and stroke, mm (in.):
75.0 × 84.7 (2.95 × 3.33)

Displacement, cm^3 (cu. in.):
1497 (91.3)

Fuel

Fuel type:
Unleaded gasoline, Octane Rating 87 (Research Octane Number 91) or higher

Fuel tank capacity, L (gal., Imp.gal.):
45 (11.9, 9.9)

Service specifications

ENGINE

Valve clearance (engine cold), mm (in.):

Intake	0.15 – 0.25 (0.006 – 0.010)
Exhaust	0.25 – 0.35 (0.010 – 0.014)

Spark plug type:

DENSO	K16R–U
NGK	BKR5EYA

Spark plug gap, mm(in.):
0.8 (0.031)

ENGINE LUBRICATION

Oil capacity (drain and refill), L (qt., Imp.qt.):

With filter	3.7 (3.9, 3.3)
Without filter	3.4 (3.6, 3.0)

"Genuine Motor Oil" is used in your Scion vehicle. Use Scion approved "Genuine Motor Oil" or equivalent to satisfy the following grade and viscosity.

Oil grade:

ILSAC multigrade engine oil

Please contact your Scion dealer for further details.

Recommended oil viscosity:

SAE 5W–30

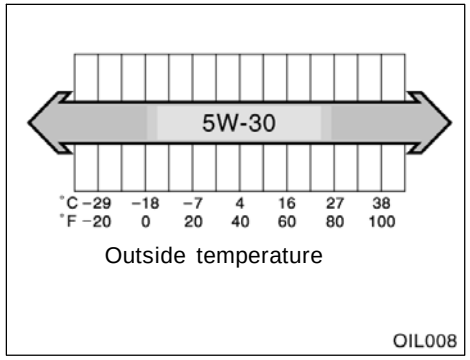

COOLING SYSTEM

Total capacity, L (qt., Imp.qt.):

Manual transmission	4.4 (4.7, 3.9)
Automatic transmission	4.3 (4.5, 3.8)

Coolant type:

"Toyota Super Long Life Coolant" is used in your Scion vehicle at factory fill. In order to avoid technical problems, only use "Toyota Super Long Life Coolant" or similar high quality ethylene glycol based non–silicate, non–amine, non–nitrite, and non–borate coolant with long–life hybrid organic acid technology. (Coolant with long–life hybrid organic acid technology is a combination of low phosphates and organic acids.)

Do not use plain water alone.

Please contact your Scion dealer for further details.

BATTERY

Open voltage* at 20°C (68°F):

12.6 – 12.8 V	Fully charged
12.2 – 12.4 V	Half charged
11.8 – 12.0 V	Discharged

*: Voltage that is checked 20 minutes after the key is removed with all the lights turned off

Charging rates: 5 A max.

CLUTCH

Pedal free play, mm (in.):
5 – 15 (0.2 – 0.6)

Fluid type:
SAE J1703 or FMVSS No. 116 DOT 3

MANUAL TRANSAXLE

Oil capacity, L (qt., Imp.qt.):
1.9 (2.0, 1.7)

Oil type:
Gear oil API GL–4 or GL–5

Recommended oil viscosity:
SAE 75W–90

AUTOMATIC TRANSAXLE

Fluid capacity (drain and refill),
L (qt., Imp.qt.):
2.9 (3.1, 2.6)

Fluid type:
Genuine ATF Type T–IV

Change automatic transmission fluid only as necessary.

Generally, it is necessary to change automatic transmission fluid only if your vehicle is driven under one of the Special Operating Conditions listed in your "Scheduled Maintenance Guide" or "Owner's Manual Supplement". When changing the automatic transmission fluid, use only "Genuine ATF Type T–IV" (ATF JWS3309 or NWS6500) to aid in assuring optimum transaxle performance.

Notice: Using automatic transmission fluid other than "Genuine ATF Type T–IV" may cause deterioration in shift quality, locking up of your transmission accompanied by vibration, and ultimately damage the automatic transmission of your vehicle.

BRAKES

Minimum pedal clearance when depressed with the pressure of 490 N (50 kgf, 110 lbf) with the engine running, mm (in.):
55 (2.2)

Pedal free play, mm (in.):
1 – 6 (0.04 – 0.24)

Pad wear limit, mm (in.):
1.0 (0.04)

Lining wear limit, mm (in.):
1.0 (0.04)

Parking brake adjustment when pulled with the force of 196 N (20 kgf, 44 lbf):
6 – 9 clicks

Fluid type:
SAE J1703 or FMVSS No. 116 DOT 3

STEERING

Wheel free play:
Less than 30 mm (1.2 in.)

Power steering fluid type:
Automatic transmission fluid DEXRON®II or III

Tires

Tire size and cold tire inflation pressure:

Front and rear

kPa (kgf/cm^2 or bar, psi)

Tire size	Front	Rear	Wheel size
P185/60R15 84T	200 (2.0, 29)	200 (2.0, 29)	15 x 6 JJ

Spare

Tire size	Tire inflation pressure kPa (kgf/cm^2 or bar, psi)	Wheel size
T125/70D16 96M	420 (4.2, 60)	16 x 4T

Wheel nut torque, N·m (kgf·m, ft·lbf):
103 (10.5, 76)

NOTE: For complete information on tires (e.g. replacing tires or replacing wheels), see “Checking tire inflation pressure” through “Replacing wheels” on pages 209 through 215.

Fuses

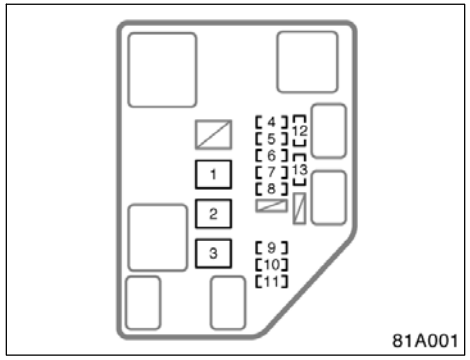

Engine compartment

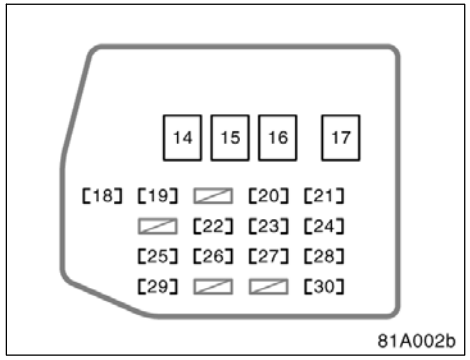

Instrument panel

Fuses

1. **RDI 30 A:** Electric cooling fan
2. **HTR SUB1 50 A:** Air conditioning system
3. **ABS NO.1 40 A:** Anti–lock brake system
4. **DOME 15 A:** Clock, interior light, gauges of meters
5. **EFI 15 A:** Multiport fuel injection system/sequential multiport fuel injection system
6. **HORN 15 A:** Horn
7. **AM2 15 A:** Starter system, SRS airbag system, multiport fuel injection system/sequential multiport fuel injection system, discharge warning system
8. **ST 30 A:** Starter system
9. **H–LP LH/H–LP LO LH 10 A:** Left–hand headlight
10. **H–LP RH/H–LP LO RH 10 A:** Right–hand headlight
11. **A/C2 7.5 A:** Air conditioning system
12. **SPARE 30 A:** Spare
13. **SPARE 15 A:** Spare
14. **AM1 40 A:** “ACC”, “GAUGE”, “WIPER”, and “ECU–IG” fuses
15. **POWER 30 A:** Power windows
16. **HTR 40 A:** Air conditioning system
17. **DEF 30 A:** Rear window defogger system.
18. **I/UP 7.5 A:** Rear window defogger system, multiport fuel injection system/ sequential multiport fuel injection system
19. **GAUGE 10 A:** Back–up lights, charging system, air conditioning system, power window system, gauges of meters
20. **D/L 25 A:** Power door lock system
21. **TAIL 10 A:** Tail lights, parking lights, license plate lights
22. **WIPER 20 A:** Windshield wipers and washer
23. **ECU–B 7.5 A:** SRS airbag system
24. **FOG 15 A:** Front fog lights
25. **ACC 15 A:** Clock, cigarette lighter
26. **ECU–IG 7.5 A:** Anti–lock brake system, electric cooling fan
27. **OBD 7.5 A:** On–board diagnosis system

28. **HAZ 10 A:** Turn signal lights, emergency flashers
29. **A.C 7.5 A:** Air conditioning system
30. **STOP 10 A:** Stop lights, high mounted stop light, anti–lock brake system, shift lock system, multiport fuel injection system/sequential multiport fuel injection system

SECTION 9

REPORTING SAFETY DEFECTS FOR U.S. OWNERS

Reporting safety defects for u.s. owners

Reporting safety defects for U.S. ownerss 236

Reporting safety defects for U.S. owners

If you believe that your vehicle has a defect which could cause a crash or could cause injury or death, you should immediately inform the National Highway Traffic Safety Administration (NHTSA) in addition to notifying Scion, a marque of Toyota Motor Sales, U.S.A., Inc.
(Toll–free: 1–866–707–2466).

If NHTSA receives similar complaints, it may open an investigation, and if it finds that a safety defect exists in a group of vehicles, it may order a recall and remedy campaign. However, NHTSA cannot become involved in individual problems between you, your dealer, or Scion, a marque of Toyota Motor Sales, U.S.A., Inc.

To contact NHTSA, you may either call the Auto Safety Hotline toll–free at 1–888–327–4236 (or 366–0123 in Washington, DC area) or write to: NHTSA, U.S. Department of Transportation, Washington, DC 20590. You can also obtain other information about motor vehicle safety from the Hotline.

U –7

Quick index

- If a service reminder indicator or warning buzzer comes on 85
- If your vehicle will not start 160
- If your engine stalls while driving 163
- If your vehicle overheats 163
- If you have a flat tire 164
- If your vehicle needs to be towed 175
- Tips for driving during break-in period 124
- How to start the engine 152
- General maintenance 191

Gas station information

Fuel type:

UNLEADED gasoline, Octane Rating 87 (Research Octane Number 91) or higher

See page 124 for detailed information.

Fuel tank capacity:

45 L (11.9 gal., 9.9 Imp.gal.)

Engine oil:

ILSAC multigrade engine oil is recommended.

See page 205 for detailed information.

Tire information: See pages 209 through 215.

Tire inflation pressure: See page 231.

Publication No. OM52723U
Part No. 01999-52723
Printed in Japan 01–0608–00 Z
xB (U)

You should know as much about the quality and importance of proper maintenance of your new vehicle as the people who built it.

The Scion authorized Repair Manual tells you how to maintain your vehicle and enables you to correctly perform your own maintenance.

The best way to keep your new vehicle in top running order is to maintain it properly from the moment you drive it off the showroom floor.

The Scion authorized Repair Manual is packed with literally everything you need to know to perform your own maintenance in virtually every area of your new vehicle.

Maintenance procedures for the engine, chassis, body, electrical system, and more, are clearly explained and illustrated.

Periodic maintenance and tune–up

Periodic maintenance and tune–up helps to prevent small problems from growing into larger ones later on. The repair manual outlines exactly what maintenance is required and clearly explains how to do the work yourself step–by–step.

Areas covered include such things as spark plug replacement, valve clearance adjustment and engine oil and filter replacement.

Where to obtain the Repair Manual

The repair manual for xB may be purchased from any Scion dealer or the Material Distribution Center. To purchase the repair manual, please contact your Scion dealer or call the Material Distribution Center toll–free at 1–800–622–2033.

WE REALLY CARE ABOUT YOU — PLEASE BUCKLE UP

Scion has made a special effort to encourage use of seat belts.

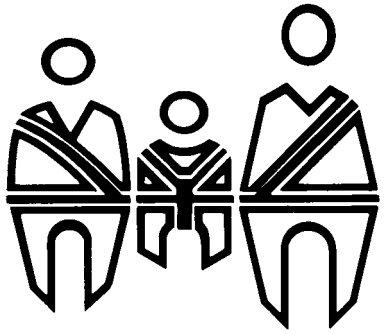

Scion belts are:

- **Comfortable**
- **Easy to use**
- **Convenient**

We encourage you to use your belts every time you drive.