HEATER & AIR CONDITIONER

SECTION HA

CONTENTS

PRECAUTIONS 2
Supplemental Restraint System (SRS) "AIR BAG" 2
Precautions for Working with HFC-134a (R-134a) 2
General Refrigerant Precautions 3
Precautions for Leak Detection Dye 3
Precaution for Identification Label on Vehicle 3
Precautions for Refrigerant Connection 4
Precautions for Servicing Compressor 7
Precautions for Service Equipment 7
Wiring Diagrams and Trouble Diagnoses 9
PREPARATION 10
Special Service Tools 10
HFC-134a (R-134a) Service Tools and Equipment 11
DESCRIPTION 14
Refrigeration System 14
Component Layout 15
Control Operation 16
Discharge Air Flow 17
System Description 18
TROUBLE DIAGNOSES 19
Component Location 19
Circuit Diagram - Air Conditioner 21
Wiring Diagram - A/C, Heater - 22
Wiring Diagram - A/C, M - 23
How to Perform Trouble Diagnoses for Quick and Accurate Repair 27
Operational Check 28
A/C System 30
Intake Door 32
Blower Motor 36
Insufficient Cooling 43
Insufficient Heating 51
Air Mix Door 52
Mode Door 59
Bi-Level Door 62
Magnet Clutch 65
Noise 76
SERVICE PROCEDURE 77
HFC-134a (R-134a) Service Procedure 77
Maintenance of Lubricant Quantity in Compressor 79
Compressor 81
Compressor Clutch - DKV-11G (ZEXEL make) 82
Thermal Protector 85
Heater Unit (Heater Core) 86
Blower Unit 88
Cooling Unit (A/C Evaporator) 89
Refrigerant Lines 90
Fluorescent Dye Leak Detector 94
Belt 95
Idle Air Control Valve (IACV) - Auxiliary Air Control (AAC) Valve 95
A/C Control System 95
Ventilation Air Filter 96
SERVICE DATA AND SPECIFICATIONS (SDS) 98
Manual 98

Supplemental Restraint System (SRS) "AIR BAG"

NMHA0270

The Supplemental Restraint System such as "AIR BAG" used along with a seat belt, helps to reduce the risk or severity of injury to the driver and front passenger for certain types of collision. The SRS system composition which is available to NISSAN MODEL S15 is as follows:
The Supplemental Restraint System consists of driver air bag module (located in the center of the steering wheel), front passenger air bag module (located on the instrument panel on passenger side), a diagnosis sensor unit, warning lamp, wiring harness and spiral cable.
Information necessary to service the system safely is included in the **RS section** of this Service Manual.

WARNING:

- **To avoid rendering the SRS inoperative, which could increase the risk of personal injury or death in the event of a collision which would result in air bag inflation, all maintenance should be performed by an authorized NISSAN dealer.**
- **Improper maintenance, including incorrect removal and installation of the SRS, can lead to personal injury caused by unintentional activation of the system. For removal of Spiral Cable and Air Bag Module, see the RS section.**
- **Do not use electrical test equipment on any circuit related to the SRS unless instructed to in this Service Manual. SRS wiring harnesses can be identified with yellow harness connector.**

Precautions for Working with HFC-134a (R-134a)

NMHA0061

WARNING:

- **CFC-12 (R-12) refrigerant and HFC-134a (R-134a) refrigerant are not compatible. These refrigerants must never be mixed, even in the smallest amounts. If the refrigerants are mixed, a compressor failure is likely to occur.**
- **Use only specified lubricant for the HFC-134a (R-134a) A/C system and HFC-134a (R-134a) components. If lubricant other than that specified is used, compressor failure is likely to occur.**
- **The specified HFC-134a (R-134a) lubricant rapidly absorbs moisture from the atmosphere. The following handling precautions must be observed:**

a) When removing refrigerant components from a vehicle, immediately cap (seal) the component to minimize the entry of moisture from the atmosphere.

b) When installing refrigerant components to a vehicle, do not remove the caps (unseal) until just before connecting the components. Connect all refrigerant loop components as quickly as possible to minimize the entry of moisture into system.

c) Only use the specified lubricant from a sealed container. Immediately reseal containers of lubricant. Without proper sealing, lubricant will become moisture saturated and should not be used.

d) Avoid breathing A/C refrigerant and lubricant vapor or mist. Exposure may irritate eyes, nose and throat. Use only approved recovery/recycling equipment to discharge HFC-134a (R-134a) refrigerant. If accidental system discharge occurs, ventilate work area before resuming service. Additional health and safety information may be obtained from refrigerant and lubricant manufacturers.

e) Do not allow lubricant (Nissan A/C System Oil Type R) to come in contact with styrofoam parts. Damage may result.

General Refrigerant Precautions

=NMHA0062

WARNING:

- **Do not release refrigerant into the air. Use approved recovery/recycling equipment to capture the refrigerant every time an air conditioning system is discharged.**
- **Always wear eye and hand protection (goggles and gloves) when working with any refrigerant or air conditioning system.**
- **Do not store or heat refrigerant containers above 52°C (125°F).**
- **Do not heat a refrigerant container with an open flame; if container warming is required, place the bottom of the container in a warm pail of water.**
- **Do not intentionally drop, puncture, or incinerate refrigerant containers.**
- **Keep refrigerant away from open flames: poisonous gas will be produced if refrigerant burns.**
- **Refrigerant will displace oxygen, therefore be certain to work in well ventilated areas to prevent suffocation.**
- **Do not pressure test or leak test HFC-134a (R-134a) service equipment and/or vehicle air conditioning systems with compressed air during repair. Some mixtures of air and R-134a have been shown to be combustible at elevated pressures. These mixtures, if ignited, may cause injury or property damage. Additional health and safety information may be obtained from refrigerant manufacturers.**

Precautions for Leak Detection Dye

NMHA0271

- The A/C system contains a fluorescent leak detection dye used for locating refrigerant leaks. An ultraviolet (UV) lamp is required to illuminate the dye when inspecting for leaks.
- Always wear fluorescence enhancing UV safety glasses to protect your eyes and enhance the visibility of the fluorescent dye.
- A compressor shaft seal should not be repaired because of dye seepage. The compressor shaft seal should only be repaired after confirming the leak with an electronic refrigerant leak detector.
- Always remove any dye from the leak area after repairs are complete to avoid a misdiagnosis during a future service.
- Do not allow dye to come into contact with painted body panels or interior components. If dye is spilled, clean immediately with the approved dye cleaner. Fluorescent dye left on a surface for an extended period of time cannot be removed.
- Do not spray the fluorescent dye cleaning agent on hot surfaces (engine exhaust manifold, etc.).
- Do not use more than one refrigerant dye bottle (1/4 ounce / 7.4 cc) per A/C system.
- Leak detection dyes for R-134a and R12 A/C systems are different. Do not use R-134a leak detection dye in R-12 A/C system or R-12 leak detection dye in R-134a A/C systems or A/C system damage may result.
- The fluorescent properties of the dye will remain for over three (3) years unless a compressor failure occurs.

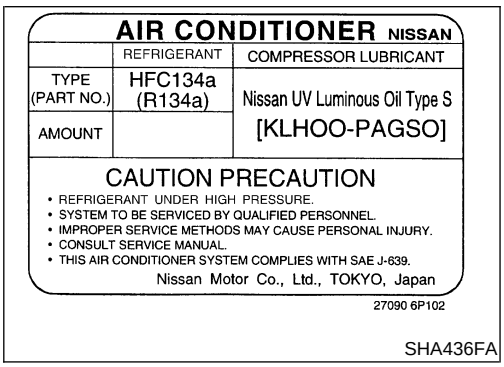

Precaution for Identification Label on Vehicle

NMHA0272

- Vehicles with factory installed fluorescent dye have this identification label on the under side of hood.
- Vehicles with factory installed fluorescent dye have a green label.
- Vehicles without factory installed fluorescent dye have a blue label.

Precautions for Refrigerant Connection

NMHA0063

A new type refrigerant connection has been introduced to all refrigerant lines except the following portion.

- Expansion valve to cooling unit

FEATURES OF NEW TYPE REFRIGERANT CONNECTION

NMHA0063S01

- The O-ring has been relocated. It has also been provided with a groove for proper installation. This eliminates the chance of the O-ring being caught in, or damaged by, the mating part. The sealing direction of the O-ring is now set vertically in relation to the contacting surface of the mating part to improve sealing characteristics.
- The reaction force of the O-ring will not occur in the direction that causes the joint to pull out, thereby facilitating piping connections.

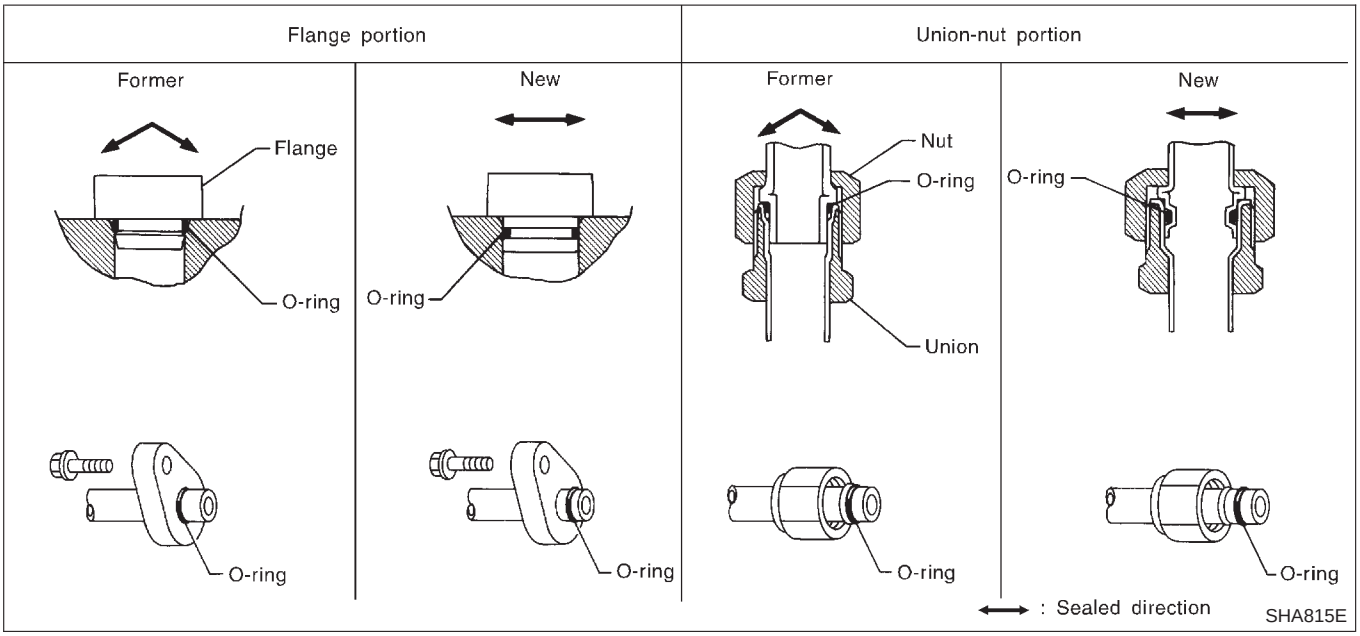

O-RING AND REFRIGERANT CONNECTION

NMHA0063S02

SEC. 271

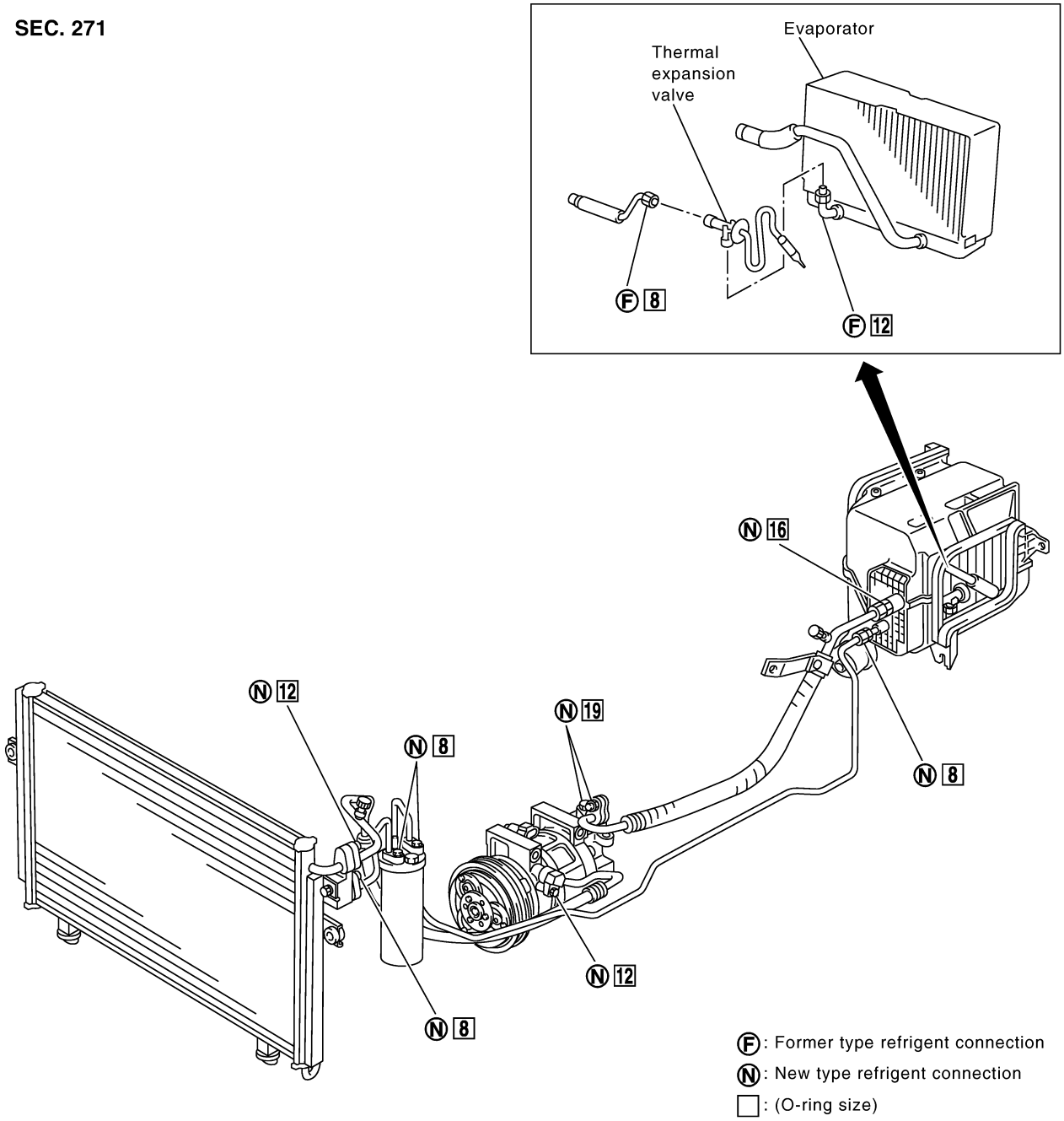

CAUTION:

The new and former refrigerant connections use different O-ring configurations. Do not confuse O-rings since they are not interchangeable. If a wrong O-ring is installed, refrigerant will leak at, or around, the connection.

O-Ring Part Numbers and Specifications

NMHA0063S0201

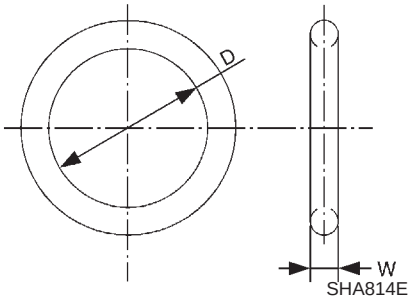

Connection type	O-ring size	Part number	D mm (in)	W mm (in)
New	8	92471 N8210	6.8 (0.268)	1.85 (0.0728)
Former		92470 N8200	6.07 (0.2390)	1.85 (0.0728)
New	12	92472 N8210	10.9 (0.429)	2.43 (0.0957)
Former		92471 N8200	10.8 (0.425)	1.78 (0.0701)
New	16	92473 N8210	13.6 (0.535)	2.43 (0.0957)
Former		92473 N8200	13.9 (0.547)	1.78 (0.0701)
New	19	92474 N8210	16.5 (0.650)	2.43 (0.0957)
Former		92477 N8200	17.12 (0.6740)	1.78 (0.0701)

WARNING:

Make sure all refrigerant is discharged into the recycling equipment and the pressure in the system is less than atmospheric pressure. Then gradually loosen the discharge side hose fitting and remove it.

CAUTION:

When replacing or cleaning refrigerant cycle components, observe the following.

- **When the compressor is removed, store it in the same position as it is when mounted on the car. Failure to do so will cause lubricant to enter the low pressure chamber.**
- **When connecting tubes, always use a torque wrench and a back-up wrench.**
- **After disconnecting tubes, immediately plug all openings to prevent entry of dirt and moisture.**
- **When installing an air conditioner in the vehicle, connect the pipes as the final stage of the operation. Do not remove the seal caps of pipes and other components until just before required for connection.**
- **Allow components stored in cool areas to warm to working area temperature before removing seal caps. This prevents condensation from forming inside A/C components.**
- **Thoroughly remove moisture from the refrigeration system before charging the refrigerant.**
- **Always replace used O-rings.**
- **When connecting tubes, apply lubricant to circle of the O-rings shown in illustration. Be careful not to apply lubricant to threaded portion.**
  Lubricant name: Nissan A/C System Oil Type R
  Part number: KLH00-PAGR0
- **O-ring must be closely attached to dented portion of tube.**
- **When replacing the O-ring, be careful not to damage O-ring and tube.**
- **Connect tube until you hear it click, then tighten the nut or bolt by hand until snug. Make sure that the O-ring is installed to tube correctly.**
- **After connecting line, conduct leak test and make sure that there is no leakage from connections. When the gas leaking point is found, disconnect that line and replace the O-ring. Then tighten connections of seal seat to the specified torque.**

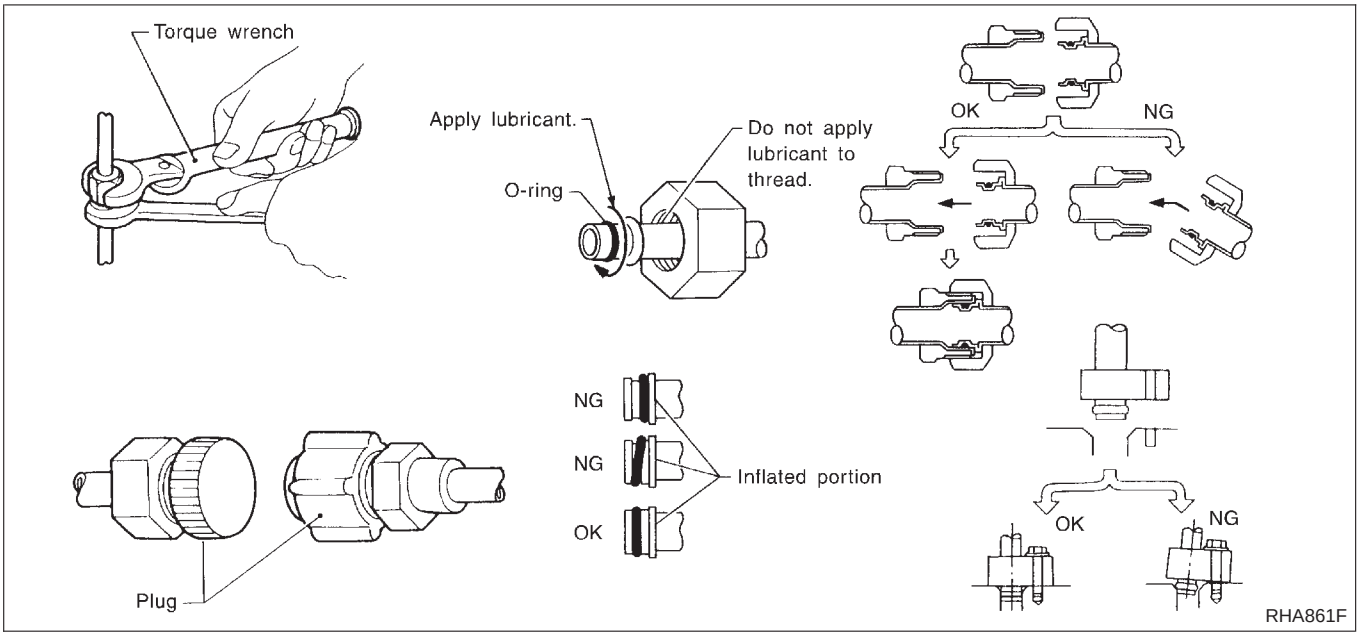

Precautions for Servicing Compressor

NMHA0064

- **Plug all openings to prevent moisture and foreign matter from entering.**
- **When the compressor is removed, store it in the same position as it is when mounted on the car.**
- **When replacing or repairing compressor, follow "Maintenance of Lubricant Quantity in Compressor" exactly. Refer to HA-79.**
- **Keep friction surfaces between clutch and pulley clean. If the surface is contaminated with lubricant, wipe it off by using a clean waste cloth moistened with thinner.**
- **After compressor service operation, turn the compressor shaft by hand more than five turns in both directions. This will equally distribute lubricant inside the compressor. After the compressor is installed, let the engine idle and operate the compressor for one hour.**
- **After replacing the compressor magnet clutch, apply voltage to the new one and check for normal operation.**

Precautions for Service Equipment

NMHA0065

RECOVERY/RECYCLING EQUIPMENT

NMHA0065S01

Follow the manufacturer's instructions for machine operation and machine maintenance. Never introduce any refrigerant other than that specified into the machine.

ELECTRONIC LEAK DETECTOR

NMHA0065S02

Follow the manufacturer's instructions for tester operation and tester maintenance.

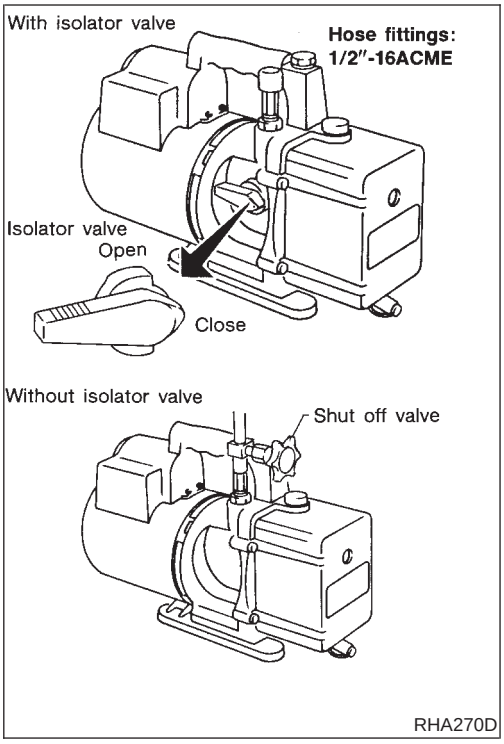

VACUUM PUMP

NMHA0065S03

The lubricant contained inside the vacuum pump is not compatible with the specified lubricant for HFC-134a (R-134a) A/C systems. The vent side of the vacuum pump is exposed to atmospheric pressure. So the vacuum pump lubricant may migrate out of the pump into the service hose. This is possible when the pump is switched off after evacuation (vacuuming) and hose is connected to it.

To prevent this migration, use a manual valve situated near the hose-to-pump connection, as follows.

- Usually vacuum pumps have a manual isolator valve as part of the pump. Close this valve to isolate the service hose from the pump.
- For pumps without an isolator, use a hose equipped with a manual shut-off valve near the pump end. Close the valve to isolate the hose from the pump.
- If the hose has an automatic shut off valve, disconnect the hose from the pump: as long as the hose is connected, the valve is open and lubricating oil may migrate.

Some one-way valves open when vacuum is applied and close under a no vacuum condition. Such valves may restrict the pump's ability to pull a deep vacuum and are not recommended.

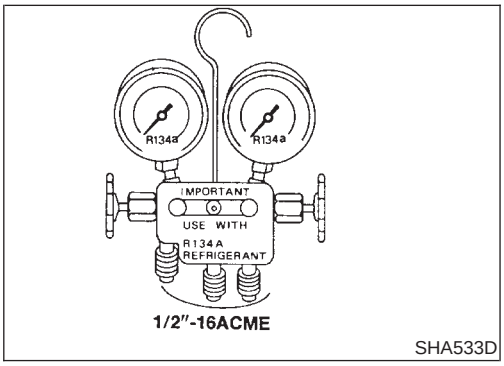

MANIFOLD GAUGE SET

NMHA0065S04

Be certain that the gauge face indicates R-134a or 134a. Make sure the gauge set has 1/2″-16 ACME threaded connections for service hoses. Confirm the set has been used only with refrigerant HFC-134a (R-134a) along with specified lubricant.

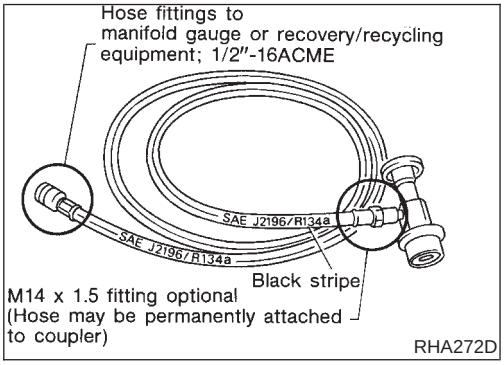

SERVICE HOSES

NMHA0065S05

Be certain that the service hoses display the markings described (colored hose with black stripe). All hoses must include positive shut off devices (either manual or automatic) near the end of the hoses opposite the manifold gauge.

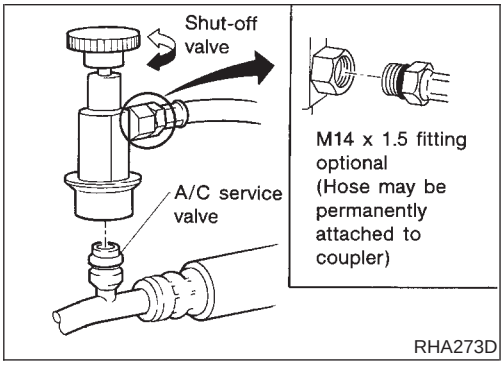

SERVICE COUPLERS

NMHA0065S06

Never attempt to connect HFC-134a (R-134a) service couplers to an CFC-12 (R-12) A/C system. The HFC-134a (R-134a) couplers will not properly connect to the CFC-12 (R-12) system. However, if an improper connection is attempted, discharging and contamination may occur.

Shut-off valve rotation	A/C service valve
Clockwise	Open
Counterclockwise	Close

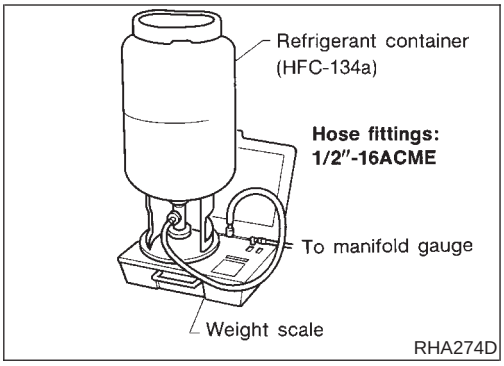

REFRIGERANT WEIGHT SCALE

NMHA0065S07

Verify that no refrigerant other than HFC-134a (R-134a) and specified lubricants have been used with the scale. If the scale controls refrigerant flow electronically, the hose fitting must be 1/2″-16 ACME.

CALIBRATING ACR4 WEIGHT SCALE

NMHA0065S09

Calibrate the scale every three months.
To calibrate the weight scale on the ACR4:

1. Press **Shift/Reset** and **Enter** at the same time.
2. Press **8787**. "**A1**" will be displayed.
3. Remove all weight from the scale.
4. Press **0**, then press **Enter**. "**0.00**" will be displayed and change to "**A2**".
5. Place a known weight (dumbbell or similar weight), between 4.5 and 8.6 kg (10 and 19 lb) on the center of the weight scale.
6. Enter the known weight using four digits. (Example 10 lb = 10.00, 10.5 lb = 10.50)
7. Press **Enter** — the display returns to the vacuum mode.
8. Press **Shift/Reset** and **Enter** at the same time.
9. Press **6** — the known weight on the scale is displayed.
10. Remove the known weight from the scale. "**0.00**" will be displayed.
11. Press **Shift/Reset** to return the ACR4 to the program mode.

CHARGING CYLINDER

NMHA0065S08

Using a charging cylinder is not recommended. Refrigerant may be vented into air from cylinder's top valve when filling the cylinder with refrigerant. Also, the accuracy of the cylinder is generally less than that of an electronic scale or of quality recycle/recharge equipment.

Wiring Diagrams and Trouble Diagnoses

NMHA0066

When you read wiring diagrams, refer to the following:

- GI-11, "HOW TO READ WIRING DIAGRAMS"
- EL-8, "Wiring Diagram — POWER —" for power distribution circuit

When you perform trouble diagnoses, refer to the following:

- GI-31, "HOW TO FOLLOW TROUBLE DIAGNOSES"
- GI-20, "HOW TO PERFORM EFFICIENT DIAGNOSIS FOR AN ELECTRICAL INCIDENT"

Special Service Tools

NMHA0273

Tool number Tool name	Description	
KV99231260 Clutch disc wrench	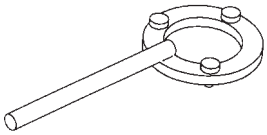 NT204	Removing shaft nut and clutch disc
KV992T0001 Clutch disc puller	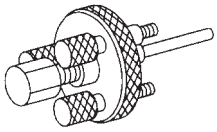 NT206	Removing clutch disc
KV992T0002 Pulley installer	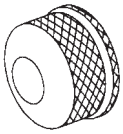 NT207	Installing pulley
KV99233130 Pulley puller	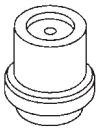 NT208	Removing pulley

HFC-134a (R-134a) Service Tools and Equipment

=NMHA0068

Never mix HFC-134a refrigerant and/or its specified lubricant with CFC-12 (R-12) refrigerant and/or its lubricant.

Separate and non-interchangeable service equipment must be used for handling each type of refrigerant/lubricant.

Refrigerant container fittings, service hose fittings and service equipment fittings (equipment which handles refrigerant and/or lubricant) are different between CFC-12 (R-12) and HFC-134a (R-134a). This is to avoid mixed use of the refrigerants/lubricant.

Adapters that convert one size fitting to another must never be used: refrigerant/lubricant contamination will occur and compressor failure will result.

Tool number (Kent-Moore No.) Tool name	Description	
HFC-134a (R-134a) refrigerant	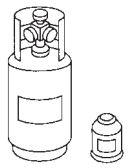 NT196	Container color: Light blue Container marking: HFC-134a (R-134a) Fitting size: Thread size ● Large container 1/2″-16 ACME
KLH00-PAGR0 Nissan A/C System Oil Type R	 NT197	Type: Poly alkylene glycol oil (PAG), type R Application: HFC-134a (R-134a) swash plate (piston) compressors (Nissan only) Lubricity: 40 mℓ (1.4 US fl oz, 1.4 Imp fl oz)
Recovery/Recycling Recharging equipment (ACR4)	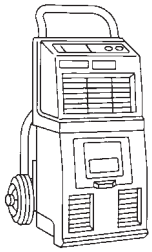 NT195	Function: Refrigerant Recovery and Recycling and Recharging
Electrical leak detector	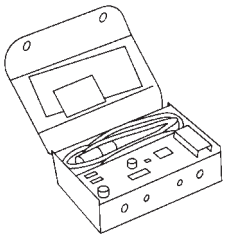 NT198	Power supply: ● DC 12V (Cigarette lighter)

HFC-134a (R-134a) Service Tools and Equipment (Cont'd)

Tool number (Kent-Moore No.) Tool name	Description	
(J-43926) Refrigerant dye leak detection kit Kit includes: (J-42220) UV lamp and UV safety glasses (J-41459) Refrigerant dye injector (J-41447) qty. 24 R-134a refrigerant dye (J-43872) Refrigerant dye cleaner	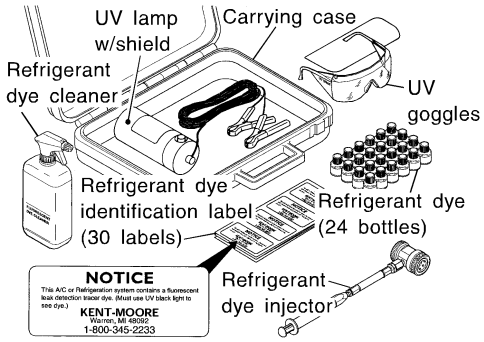 SHA437F	Power supply: DC 12V (Battery terminal)
(J-42220) Fluorescent dye leak detector	UV lamp UV safety glasses 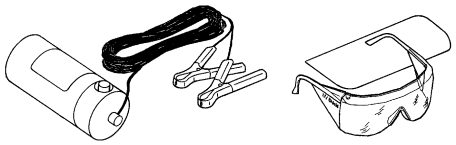 SHA438F	Power supply: DC12V (Battery terminal) For checking refrigerant leak when fluorescent dye is installed in A/C system. Includes: UV lamp and UV safety glasses
(J-41447) R134a Fluorescent Leak Detection Dye (Box of 24, 1/4 ounce bottles)	Dye 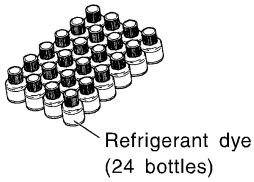 SHA439F	Application: For R-134a PAG oil Container: 1/4 ounce (7.4 cc) bottle (Includes self-adhesive dye identification labels for affixing to vehicle after charging system with dye.)
(J-41459) R134a Dye Injector Use with J-41447, 1/4 ounce bottle	Dye injector 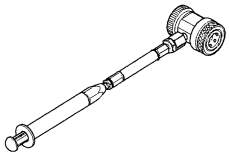 SHA440F	For injecting 1/4 ounce of Fluorescent Leak Detection Dye into A/C system.
(J-43872) Dye cleaner	 SHA441F	For cleaning dye spills.
Manifold gauge set (with hoses and couplers)	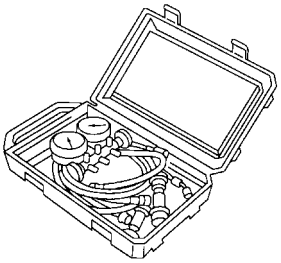 NT199	Identification: ● The gauge face indicates R-134a. Fitting size: Thread size ● 1/2″-16 ACME

Tool number (Kent-Moore No.) Tool name	Description	
Service hoses ● High side hose ● Low side hose ● Utility hose	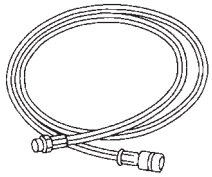 NT201	Hose color: ● Low hose: Blue with black stripe ● High hose: Red with black stripe ● Utility hose: Yellow with black stripe or green with black stripe Hose fitting to gauge: ● 1/2″-16 ACME
Service couplers ● High side coupler ● Low side coupler	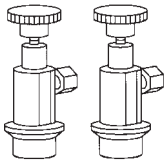 NT202	Hose fitting to service hose: ● M14 x 1.5 fitting is optional or permanently attached.
Refrigerant weight scale	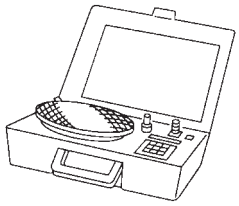 NT200	For measuring of refrigerant Fitting size: Thread size ● 1/2″-16 ACME
Vacuum pump (Including the isolator valve)	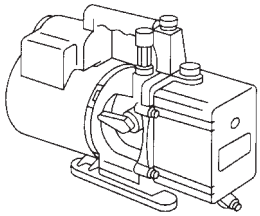 NT203	Capacity: ● Air displacement: 4 CFM ● Micron rating: 20 microns ● Oil capacity: 482 g (17 oz) Fitting size: Thread size ● 1/2″-16 ACME

Refrigeration System

REFRIGERATION CYCLE

NMHA0069

Refrigerant Flow

NMHA0069S01

The refrigerant flows in the standard pattern, that is, through the compressor, the condenser, the liquid tank, through the evaporator, and back to the compressor. The refrigerant evaporation through the evaporator coil is controlled by an externally equalized expansion valve, located inside the evaporator case.

Refrigerant System Protection

NMHA0069S03

Dual-pressure Switch

NMHA0069S0303

The refrigerant system is protected against excessively high or low pressures by the dual-pressure switch, located on the liquid tank. If the system pressure rises above or falls below the specifications, the dual-pressure switch opens to interrupt the compressor operation.

Fusible Plug

NMHA0069S0304

Opens at temperatures above 105°C (221°F), thereby discharging refrigerant to the atmosphere. If this plug is melted, check the refrigerant line and replace liquid tank.

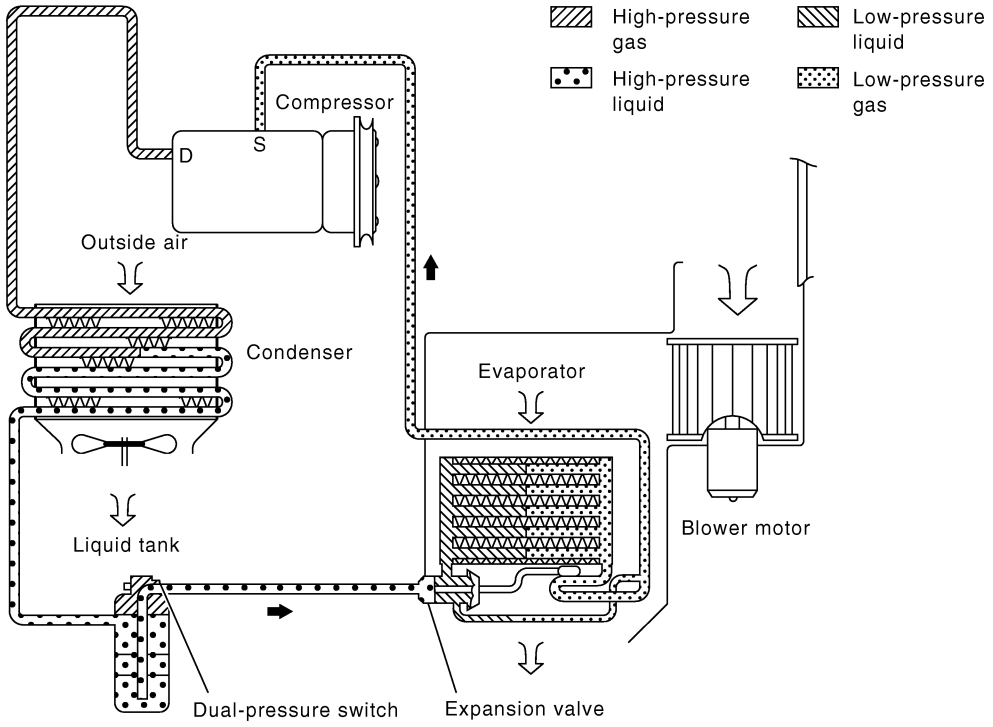

ZHA086H

Component Layout

NMHA0071

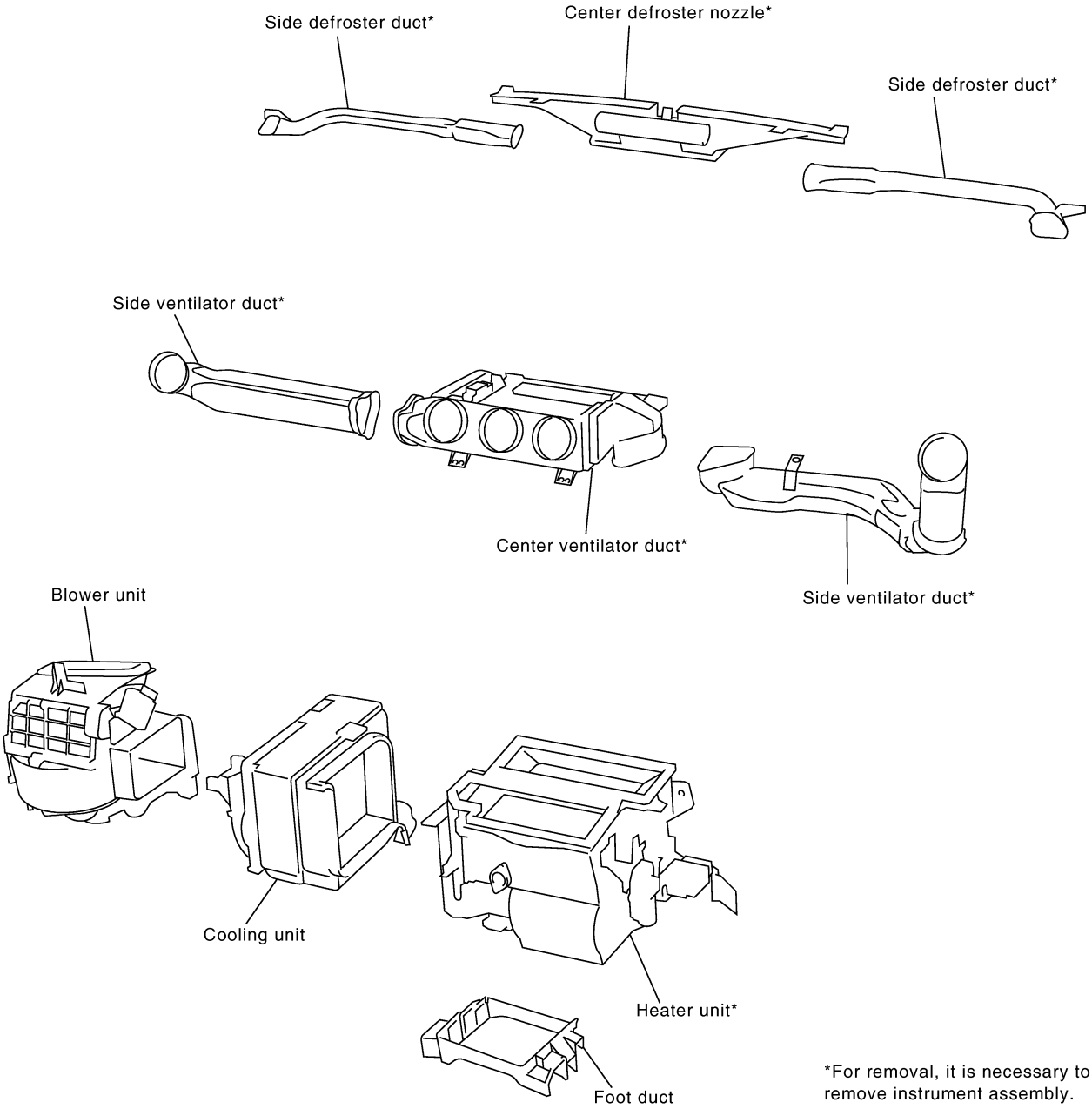

*For removal, it is necessary to remove instrument assembly.

ZHA002H

Control Operation

NMHA0072

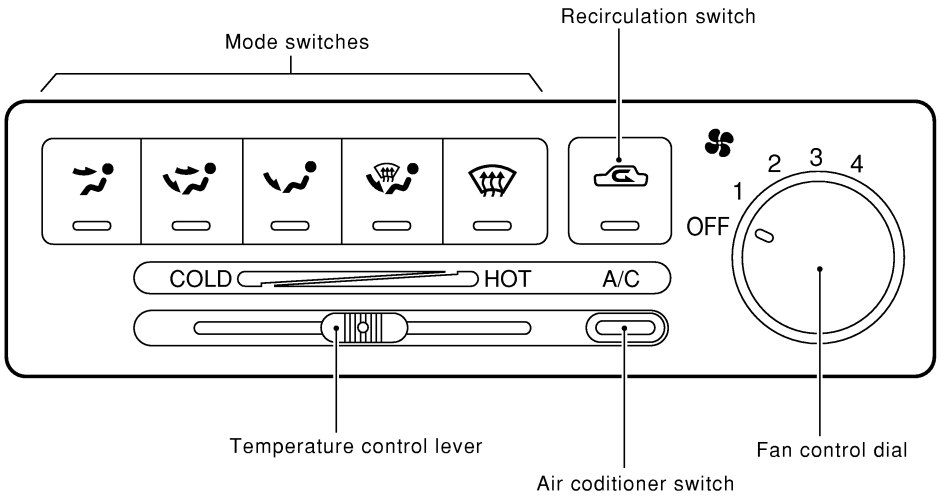

ZHA003H

FAN CONTROL DIAL

NMHA0072S01

This dial turns the fan ON and OFF, and controls fan speed.

MODE SWITCHES

NMHA0072S02

This switch allows control of the outlet air flow.
In “DEF” or “D/F” mode, the intake door is set to “FRESH”.
The compressor turns on when the Mode switch is moved to “DEF”.

TEMPERATURE CONTROL LEVER

NMHA0072S03

This lever allows adjustment of the temperature of the outlet air.

RECIRCULATION (REC) SWITCH

NMHA0072S04

OFF position: Outside air is drawn into the passenger compartment.
ON position: Interior air is recirculated inside the vehicle. The indicator lamp will also light.
Recirculation is canceled when DEF or D/F is selected, and resumes when another mode is chosen.
If the refrigerant pressure sensor input signal is high, recirculation is canceled when VENT, B/L or FOOT mode is selected.

AIR CONDITIONER SWITCH

NMHA0072S05

The air conditioner switch controls the A/C system. When the switch is depressed with the fan ON, the compressor will turn ON. The indicator lamp will also light.
The air conditioner cooling function operates only when the engine is running.

Discharge Air Flow

NMHA0073

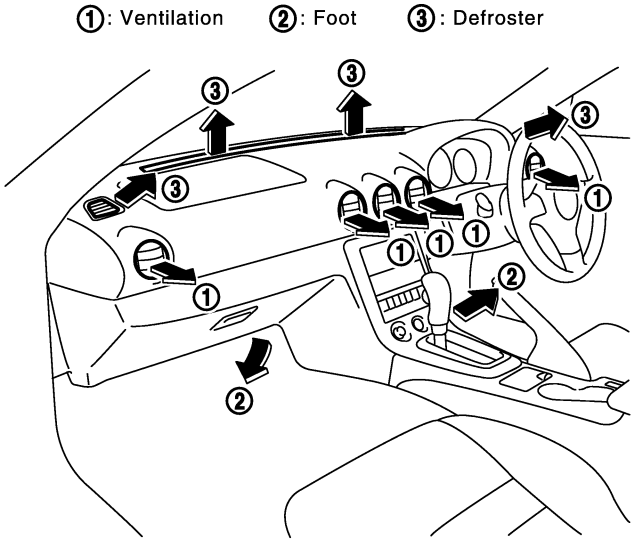

Floor

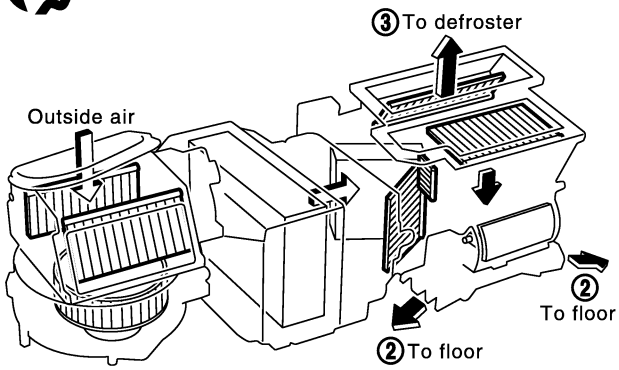

Ventilation
(switch "ON")

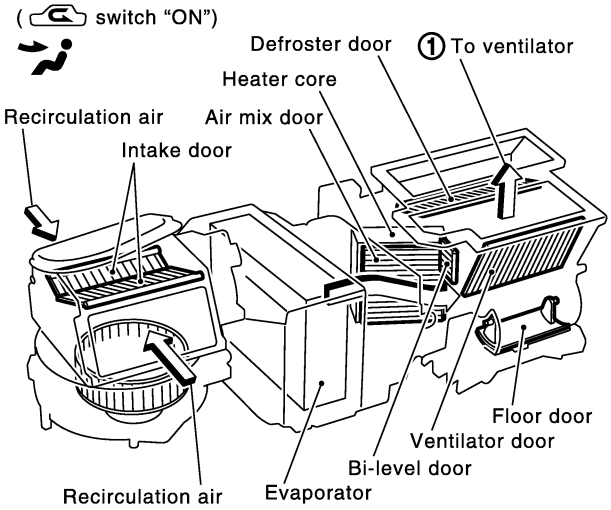

Floor and defroster

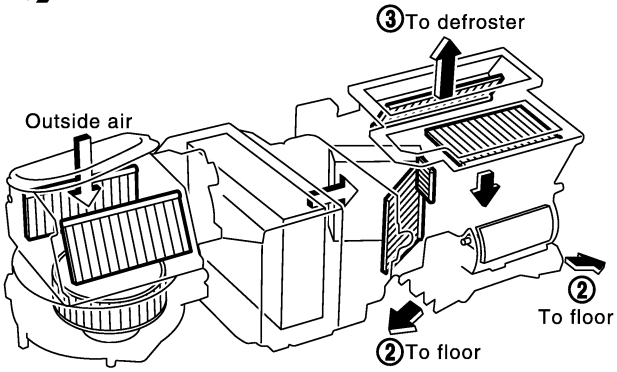

Bi-level
(switch "OFF")

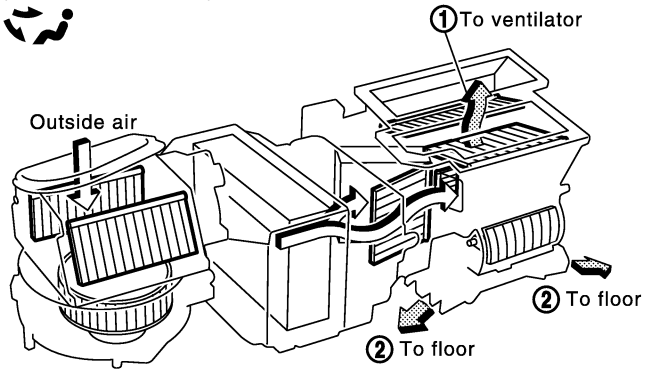

Defroster

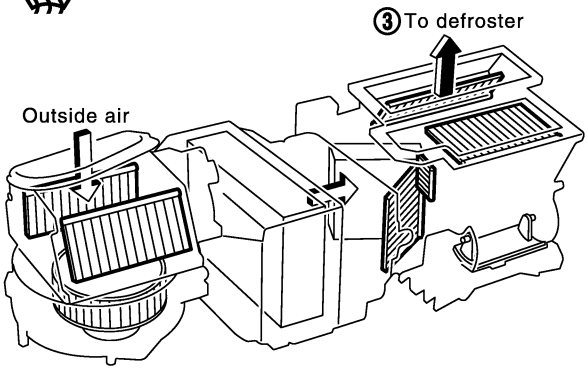

: Air passed through heater core
: Mixed air (+)
: Air not passed through heater core

ZHA004H

System Description

NMHA0074

SWITCHES AND THEIR CONTROL FUNCTIONS

NMHA0074S01

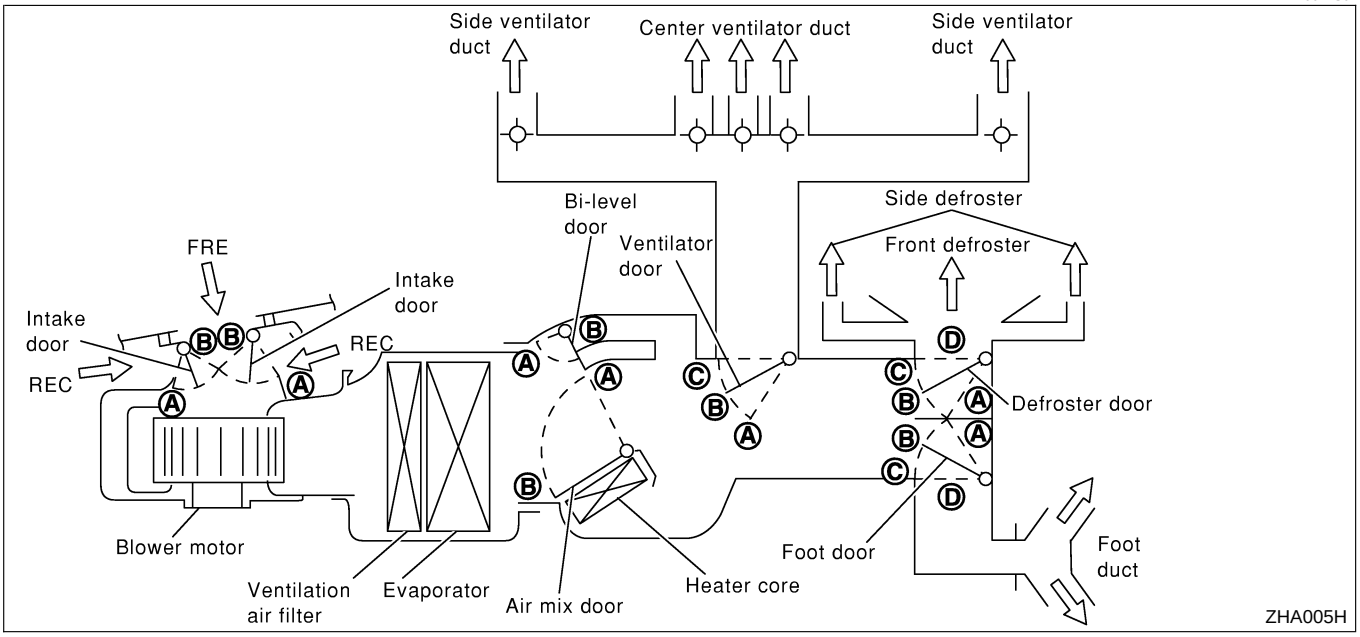

Position or switch	MODE SW					REC SW		Temperature control lever		
	VENT	B/L	FOOT	D/F	DEF	REC	FRE	COLD HOT		
Door								18.0˚C (65˚F)	← →	32.0˚C (85˚F)
Ventilator door	Ⓐ	Ⓑ	Ⓒ	Ⓒ	Ⓒ	—		—		
Foot door	Ⓓ	Ⓒ	Ⓐ	Ⓑ	Ⓓ	—		—		
Defroster door	Ⓓ	Ⓓ	Ⓒ	Ⓑ	Ⓐ	—		—		
Bi-level door	Ⓑ	Ⓐ	Ⓑ	Ⓑ	Ⓑ	—		—		
Intake door	—					Ⓑ	Ⓐ	—		
Air mix door	—					—		Ⓑ	Ⓑ ~ Ⓐ	Ⓐ

ZHA006H

Component Location

NMHA0085

ENGINE COMPARTMENT

NMHA0085S01

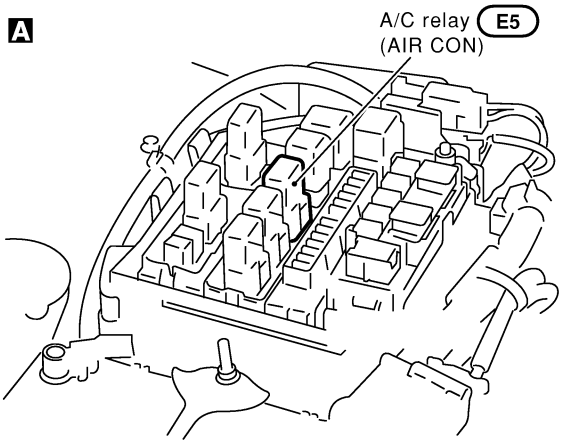

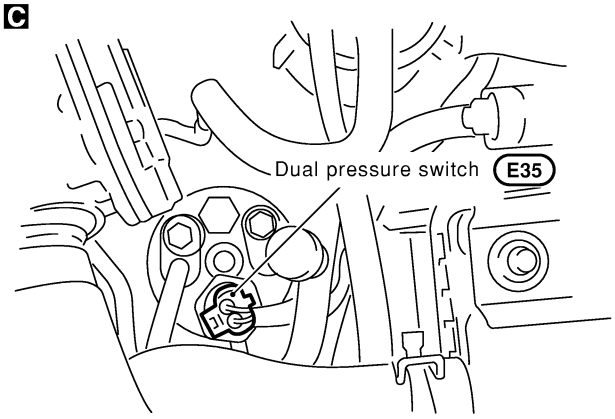

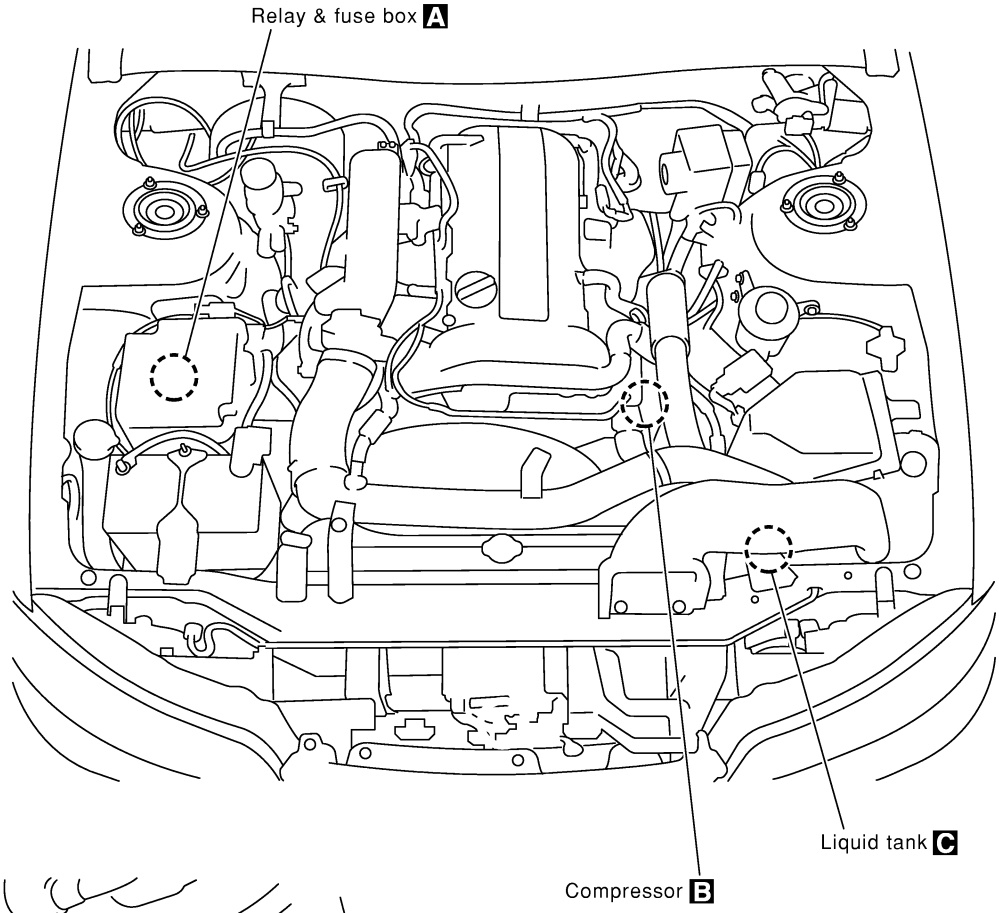

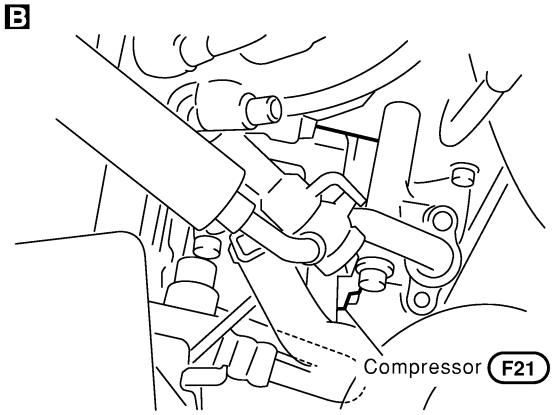

ZHA007H

PASSENGER COMPARTMENT

NMHA0085S02

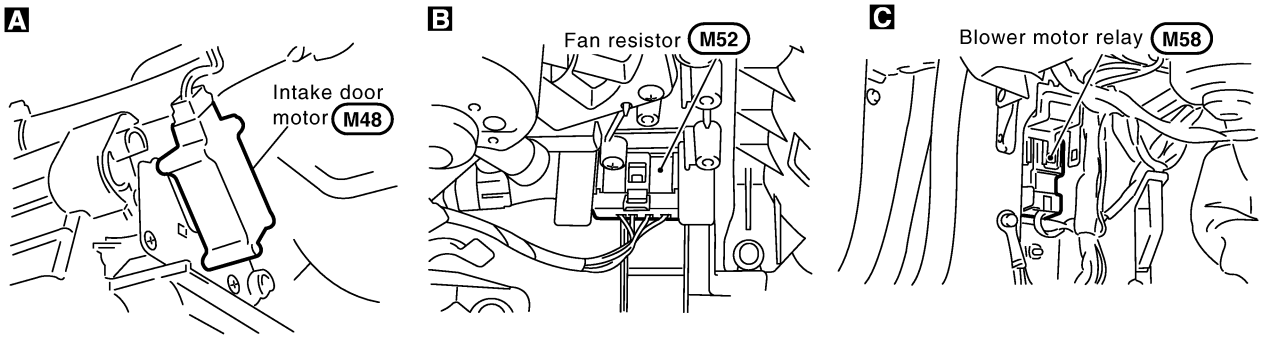

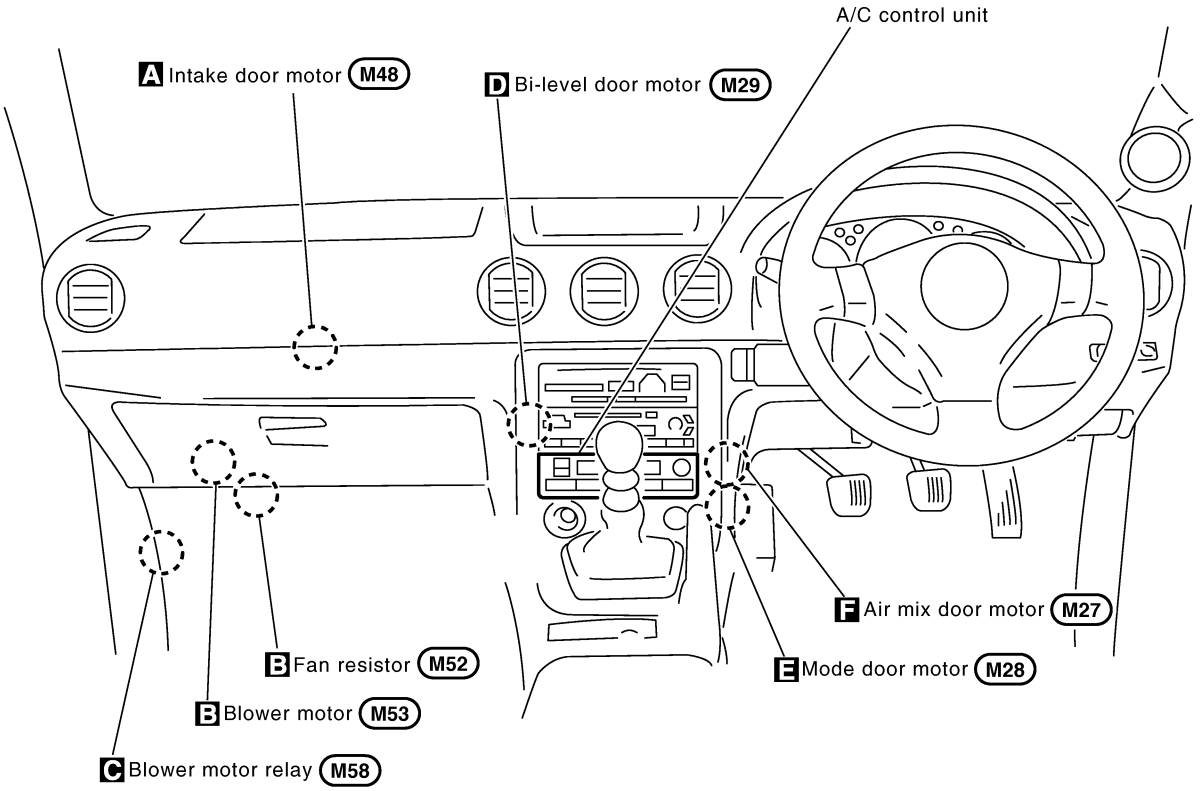

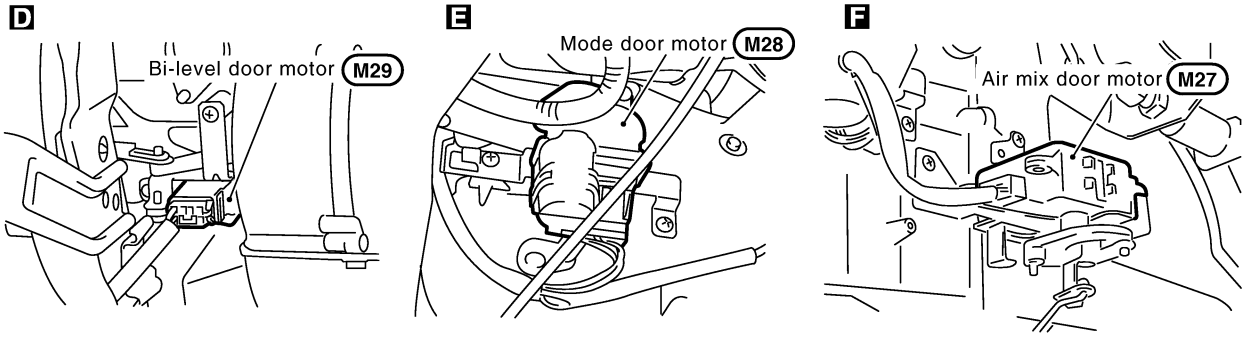

ZHA008H

Circuit Diagram — Air Conditioner

NMHA0087

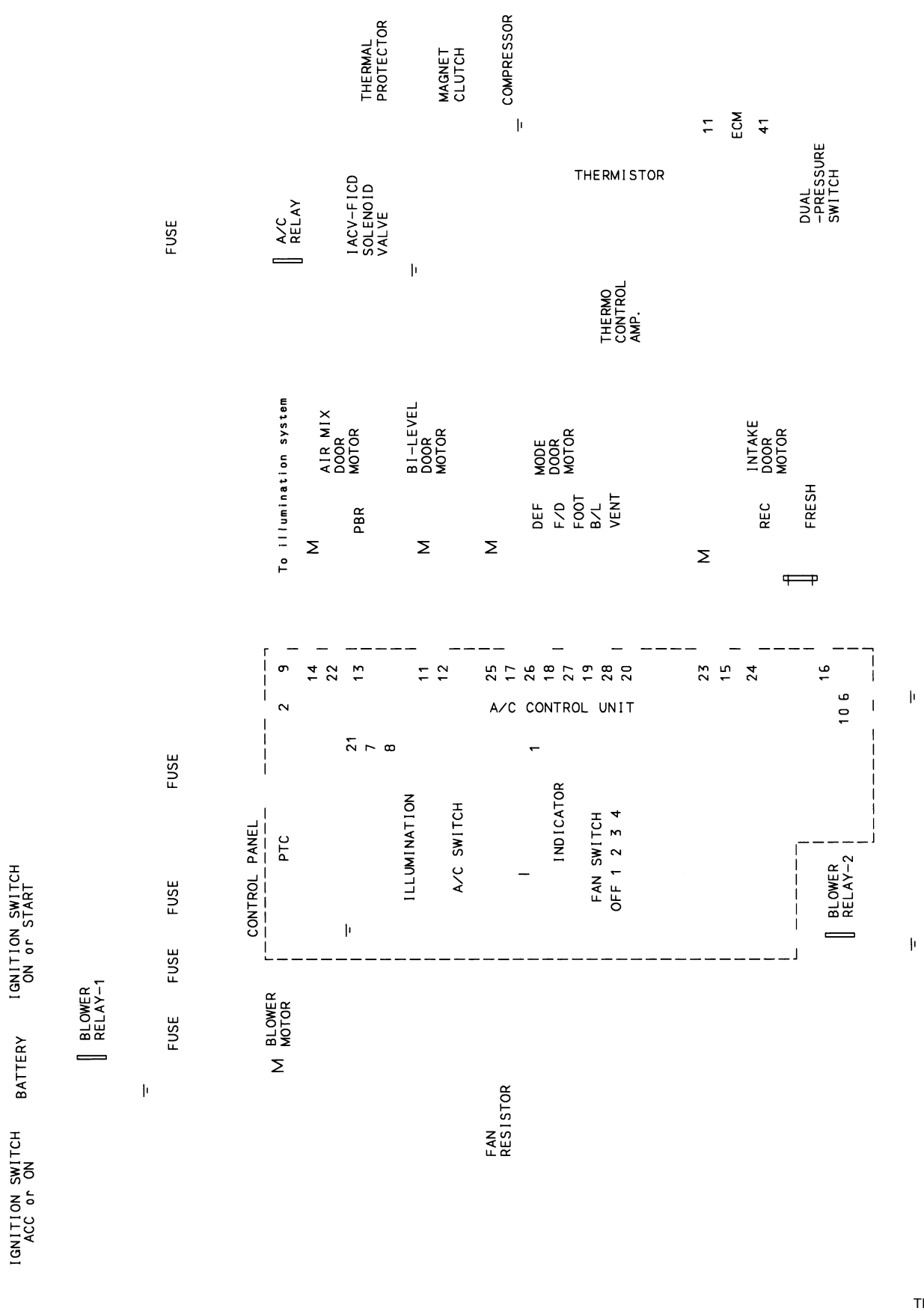

THA284

Wiring Diagram — A/C, Heater —

NMHA0265

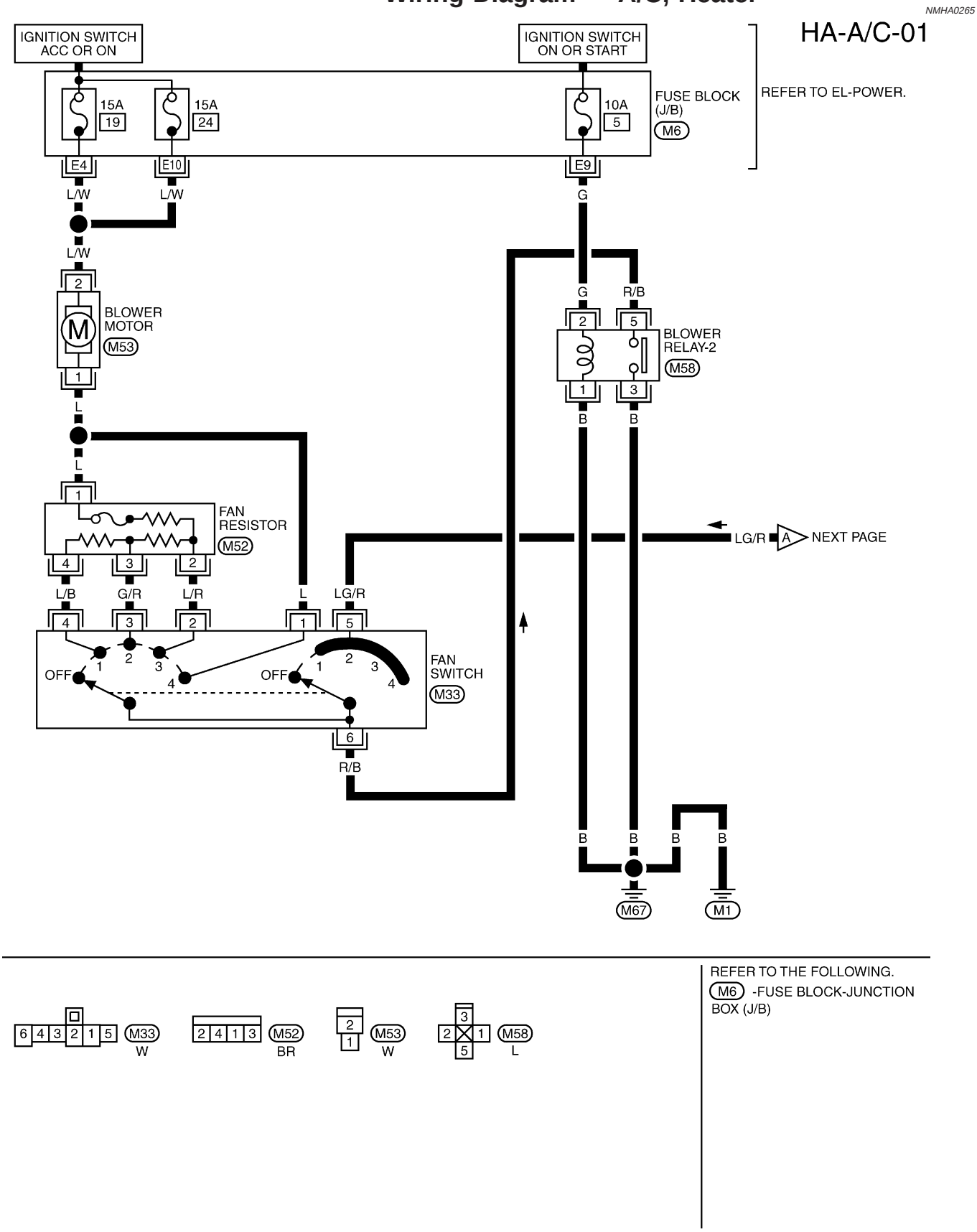

THA285

Wiring Diagram — A/C, M —

NMHA0088

HA-A/C-02

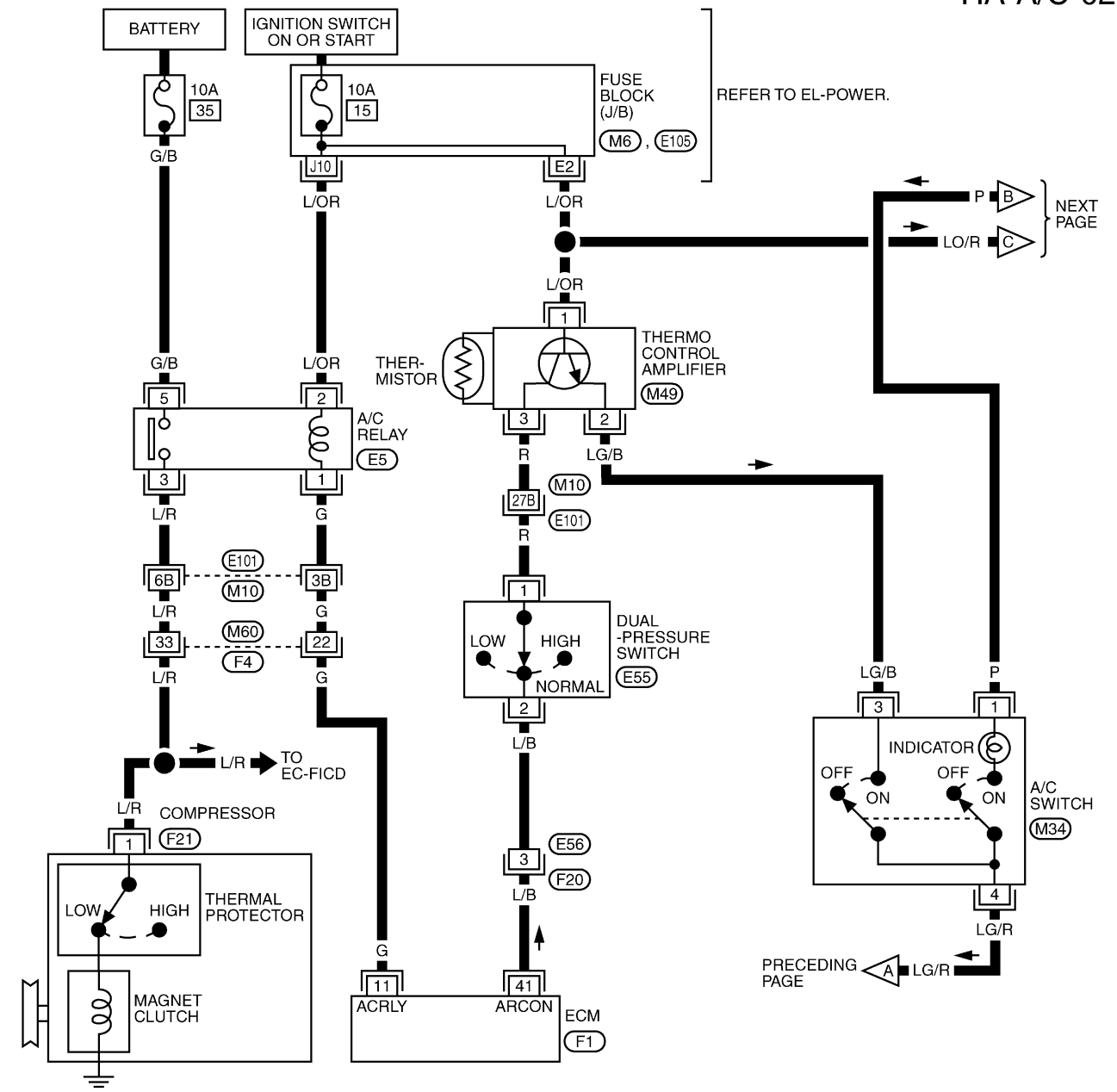

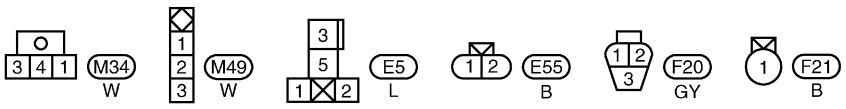

REFER TO THE FOLLOWING.
E101 , F4 -SUPER MULTIPLE JUNCTION (SMJ)
M6 , E105 -FUSE BLOCK-JUNCTION BOX (J/B)
F1 -ELECTRICAL UNITS

THA286

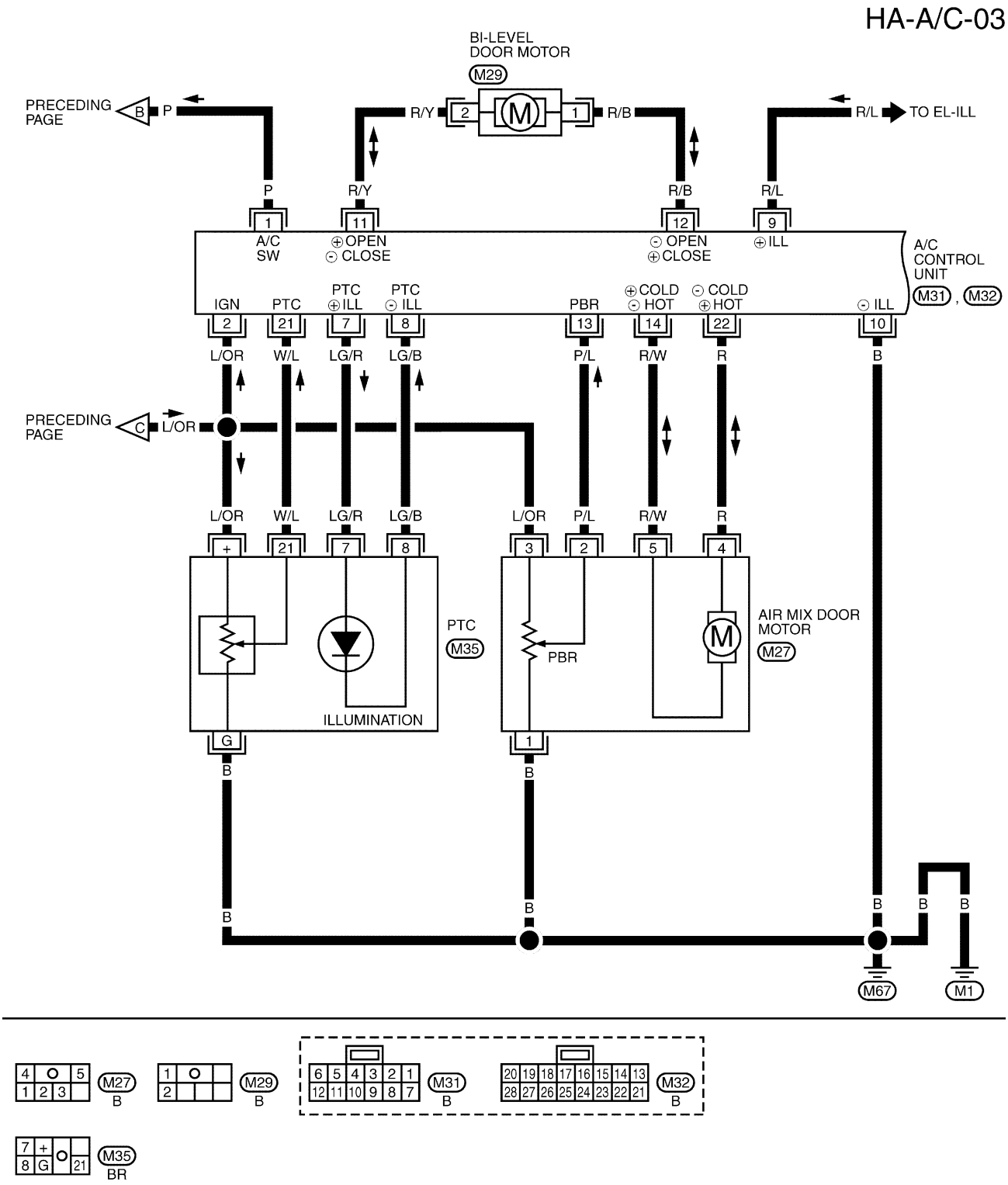
HA-A/C-03
BI-LEVEL DOOR MOTOR
M29
PRECEDING PAGE
B
P
R/Y
2
M
1
R/B
R/L
TO EL-ILL
P
R/Y
R/B
R/L
1
11
12
9
A/C SW
⊕OPEN
⊖CLOSE
⊖OPEN
⊕CLOSE
⊕ILL
A/C CONTROL UNIT
M31 , M32
IGN
PTC
PTC ⊕ILL
PTC ⊖ILL
PBR
⊕COLD ⊖HOT
⊖COLD ⊕HOT
⊖ILL
2
21
7
8
13
14
22
10
L/OR
W/L
LG/R
LG/B
P/L
R/W
R
B
PRECEDING PAGE
C
L/OR
L/OR
W/L
LG/R
LG/B
L/OR
P/L
R/W
R
+
21
7
8
3
2
5
4
PTC
M35
PBR
AIR MIX DOOR MOTOR
M27
ILLUMINATION
G
1
B
B
B
B
B
B
B
M67
M1

M27
B
M29
B
M31
B
M32
B
M35
BR

THA287

HA-A/C-04

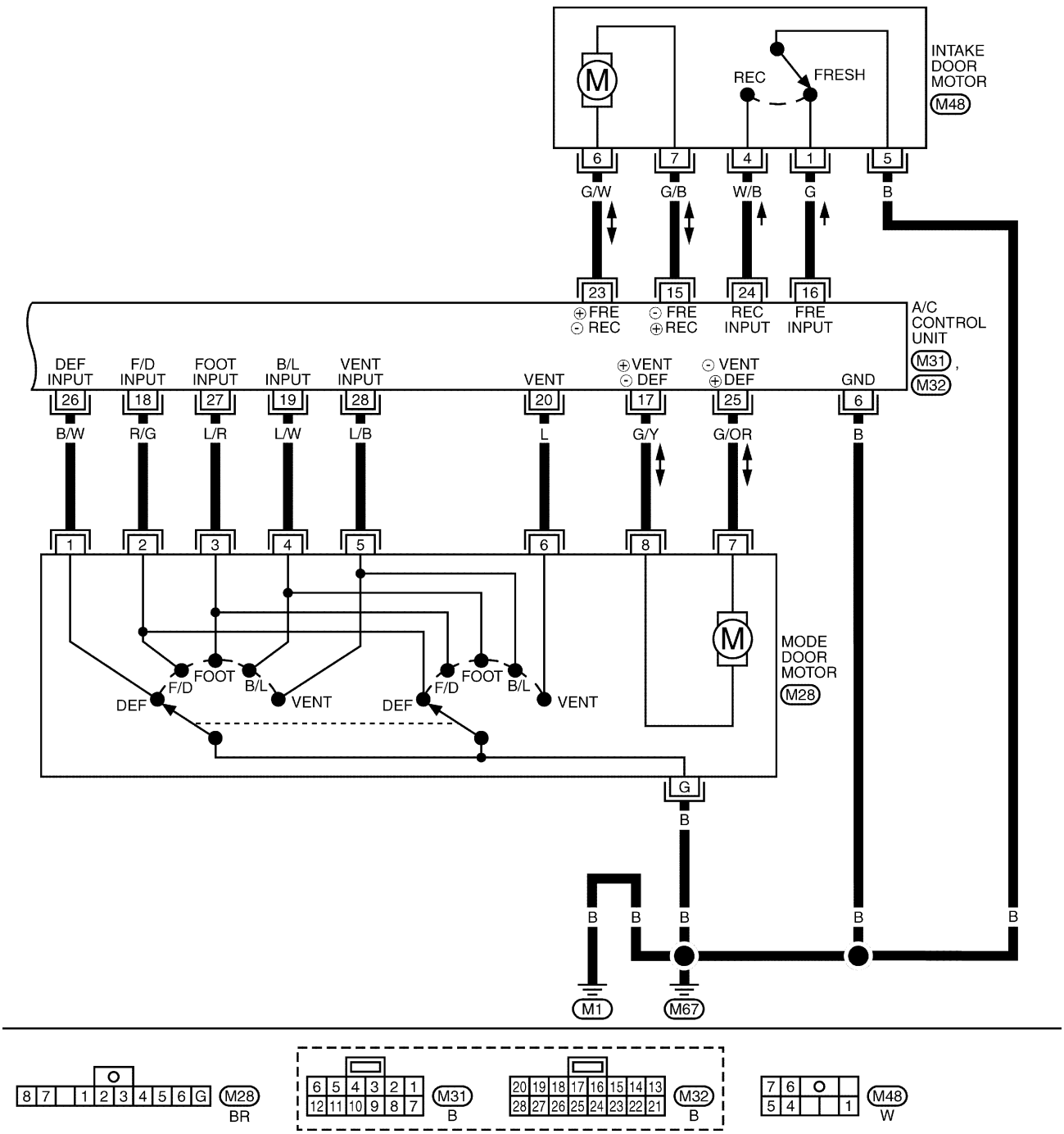

THA288

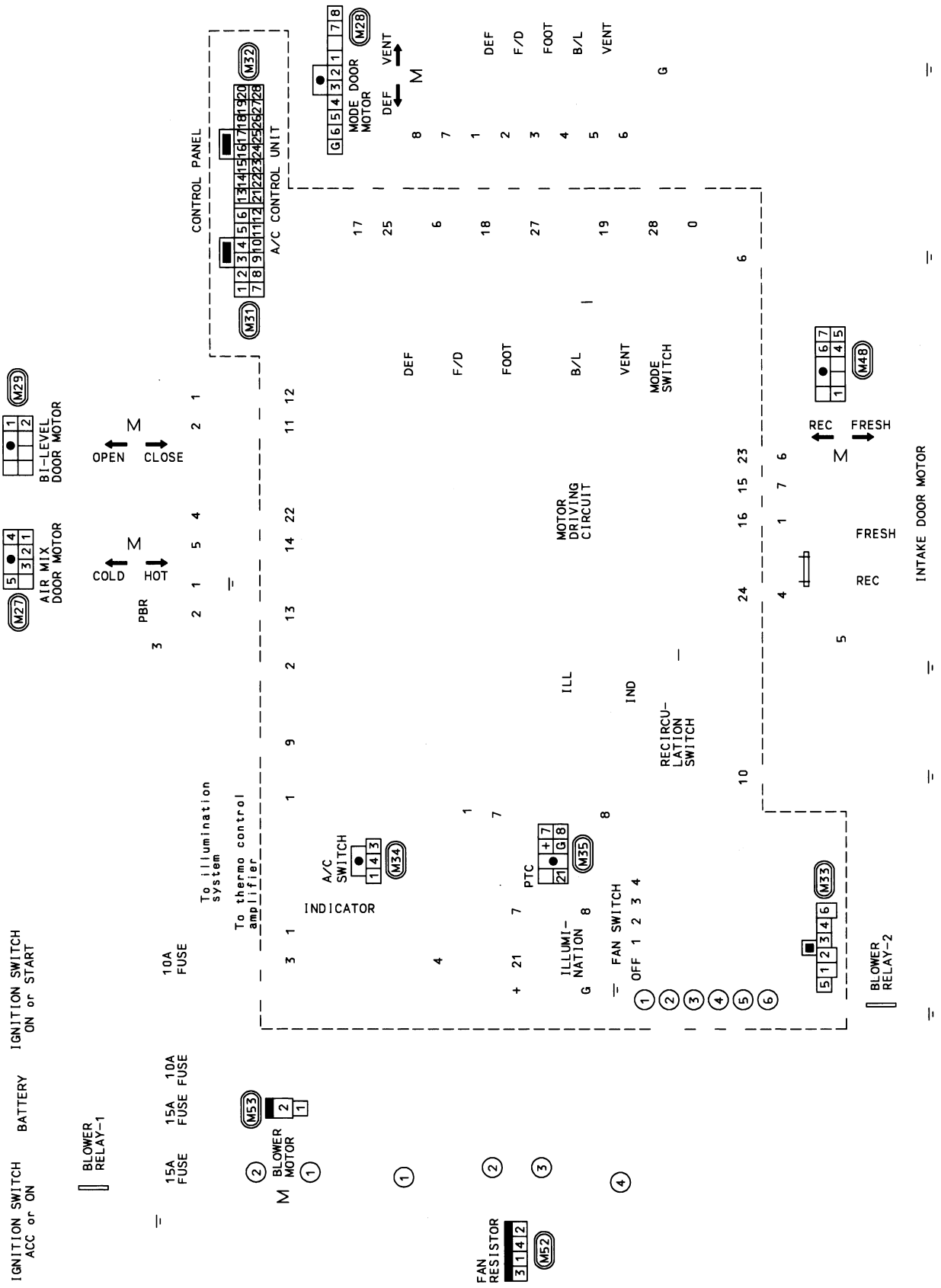
IGNITION SWITCH ACC or ON
BATTERY
IGNITION SWITCH ON or START
BLOWER RELAY-1
15A FUSE
15A FUSE
10A FUSE
10A FUSE
BLOWER MOTOR
FAN RESISTOR
To illumination system
To thermo control amplifier
INDICATOR
A/C SWITCH
PTC
ILLUMI-NATION
FAN SWITCH
OFF 1 2 3 4
MOTOR DRIVING CIRCUIT
RECIRCU-LATION SWITCH
MODE SWITCH
DEF
F/D
FOOT
B/L
VENT
ILL
IND
BI-LEVEL DOOR MOTOR
AIR MIX DOOR MOTOR
OPEN
CLOSE
COLD
HOT
PBR
CONTROL PANEL
A/C CONTROL UNIT
MODE DOOR MOTOR
DEF
VENT
REC
FRESH
INTAKE DOOR MOTOR
BLOWER RELAY-2

THA289

How to Perform Trouble Diagnoses for Quick and Accurate Repair

NMHA0075

WORK FLOW

NMHA0075S01

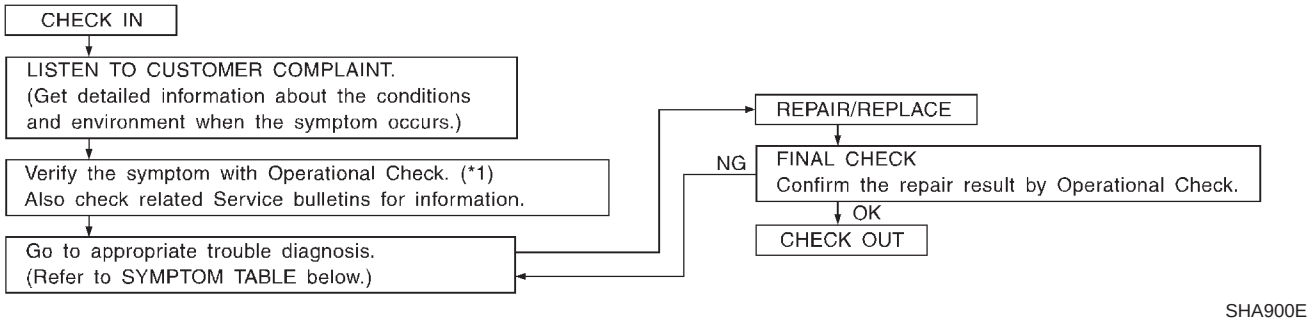

*1: HA-28

SYMPTOM TABLE

NMHA0075S02

Symptom	Reference page	
● A/C system does not come on.	● Go to Trouble Diagnosis Procedure for A/C system.	HA-30
● Intake door does not change in VENT, B/L or FOOT mode.	● Go to Trouble Diagnosis Procedure for Intake Door.	HA-32
● Blower motor does not rotate at all.	● Go to Trouble Diagnosis Procedure for Blower Motor.	HA-36
● Insufficient cooling.	● Go to Trouble Diagnosis Procedure for Insufficient cooling.	HA-43
● Insufficient heating.	● Go to Trouble Diagnosis Procedure for Insufficient heating.	HA-51
● Air mix door motor does not operate normally.	● Go to Trouble Diagnosis Procedure for Air mix door motor.	HA-52
● Mode door does not change.	● Go to Trouble Diagnosis Procedure for Mode door.	HA-59
● Bi-level door motor does not operate normally.	● Go to Trouble Diagnosis Procedure for Bi-level door.	HA-62
● Magnet clutch does not engage when A/C switch and fan switch are ON.	● Go to Trouble Diagnosis Procedure for Magnet Clutch.	HA-65
● Noise	● Go to Trouble Diagnosis Procedure for Noise.	HA-76

Operational Check

=NMHA0076

The purpose of the operational check is to confirm that the system operates as it should. The systems which are checked are the blower, mode (discharge air), intake air, temperature decrease, and temperature increase.

CONDITIONS:

NMHA0076S01

Engine running at normal operating temperature.

PROCEDURE:

NMHA0076S02

1. Check Blower

NMHA0076S0201

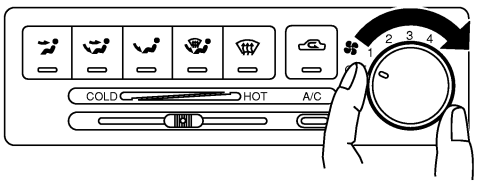

ZHA009H

1. Turn fan control dial to 1-speed.
   Blower should operate on 1-speed.
2. Then turn fan control dial to 2-speed.
3. Continue checking blower speed until all four speeds are checked.
4. Leave blower on 4-speed.

If NG, go to trouble diagnosis procedure for blower motor (HA-36).
If OK, continue with next check.

2. Check Discharge Air

NMHA0076S0202

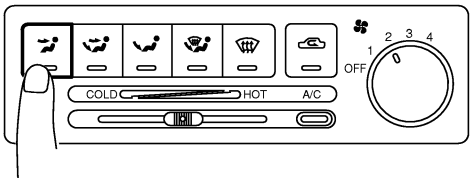

ZHA010H

1. Press each mode switch.

Discharge air flow

Mode switch	Air outlet/distribution		
	Face	Foot	Defroster
	100%	–	–
	60%	40%	–
	–	80%	20%
	–	60%	40%
	–	–	100%

ZHA011H

2. Confirm that discharge air comes out according to the air distribution table at left.
   Refer to “Discharge Air Flow” in “DESCRIPTION” (HA-17).

NOTE:

Confirm that the compressor clutch is engaged (visual inspection) and intake door position is at FRESH when the DEF ( ) is pressed.
Confirm that the intake door position is at FRESH when the D/F ( ) is pressed.
Intake door position is checked in the next step.

If NG, go to trouble diagnosis procedure for mode door motor (HA-59).
If OK, continue with next check.

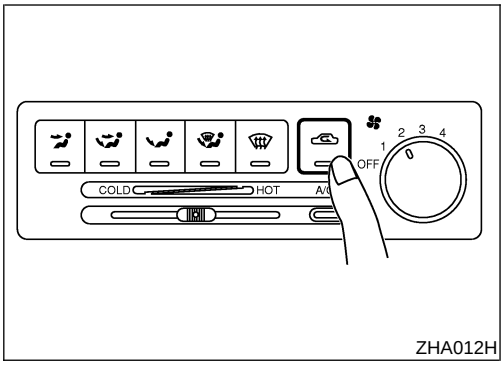

ZHA012H

3. Check Recirculation

NMHA0076S0203

1. Press recirculation switch.
   Recirculation indicator should light.
2. Listen for intake door position change (you should hear blower sound change slightly).

NOTE:
Confirm that the RECIRCULATION (REC) switch is canceled in the DEF ( ) and D/F ( ) modes.

If NG, go to trouble diagnosis procedure for intake door motor (HA-32).
If OK, continue with next check.

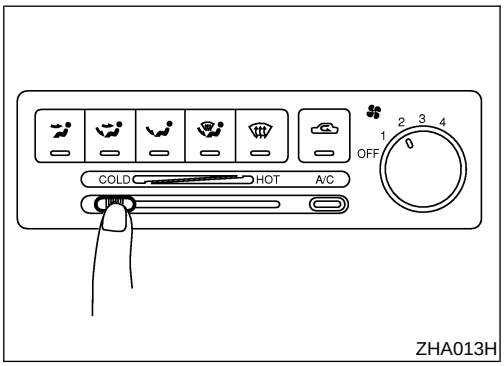

ZHA013H

4. Check Temperature Decrease

NMHA0076S0204

1. Slide temperature control lever to full cold.
2. Check for cold air at discharge air outlets.

If NG, go to trouble diagnosis procedure for insufficient cooling motor (HA-43).
If OK, continue with next check.

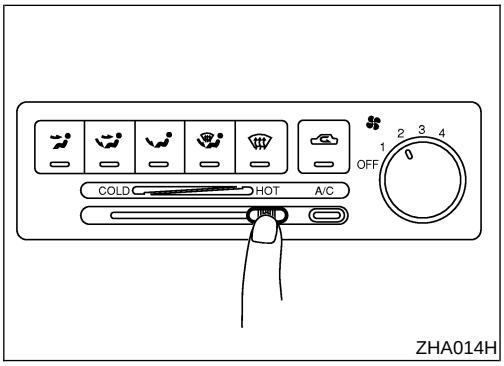

ZHA014H

5. Check Temperature Increase

NMHA0076S0205

1. Slide temperature control lever to full hot.
2. Check for hot air at discharge air outlets.

If NG, go to trouble diagnosis procedure for insufficient heating motor (HA-51).
If OK, continue with next check.

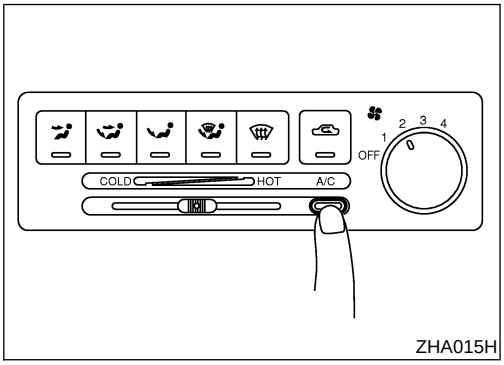

ZHA015H

6. Check Air Conditioner Switch

NMHA0076S0206

Turn fan control switch to the desired (1 to 4-speed) position and push the air conditioner switch to turn ON the air conditioner.
The indicator light should come on when air conditioner is ON.
If NG, go to trouble diagnosis procedure for A/C system (HA-30).
If OK, continue with next check.
If all operational checks are OK (symptom cannot be duplicated), go to "Incident Simulation Tests" (GI-21) and perform tests as outlined to simulate driving conditions and environment. If symptom appears, refer to "Symptom Table" (HA-27) and perform applicable trouble diagnosis procedures.

A/C System

TROUBLE DIAGNOSIS PROCEDURE FOR A/C SYSTEM

=NMHA0253

Symptom:

- **A/C system does not come on.**

INSPECTION FLOW

1. Confirm symptom by performing the following operational check.

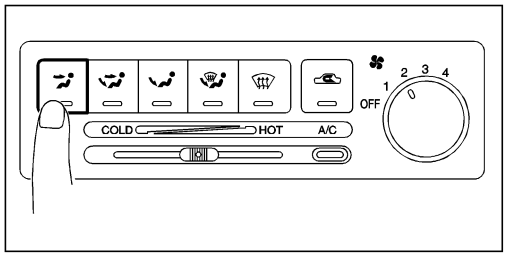

OPERATIONAL CHECK

Confirm that the system operates normally.

If OK (symptom cannot be duplicated), perform complete operational check (*2).
If NG (symptom is confirmed), continue with STEP-2 following.

2. Check for any service bulletins.

OK

3. Check main power supply and ground circuit. (*1)

OK

4. Go to A/C system circuit. (*3)

OK

5. Replace push control unit.

OK

INSPECTION END

ZHA016H

*1: HA-31 *2: HA-28 *3: HA-21

MAIN POWER SUPPLY AND GROUND CIRCUIT CHECK

=NMHA0254

Power Supply Circuit Check

NMHA0254S01

Check power supply circuit for air conditioner system.
Refer to EL-8, "Wiring Diagram — POWER —".

DIAGNOSTIC PROCEDURE

NMHA0255

SYMPTOM:

- **A/C system does not come on.**

1	CHECK POWER SUPPLY CIRCUIT FOR A/C CONTROL UNIT

1. Disconnect A/C control unit harness connector.
2. Are there approx. 12 volts between each A/C control unit connector M31 terminal No. 2 (L/OR) and body ground?

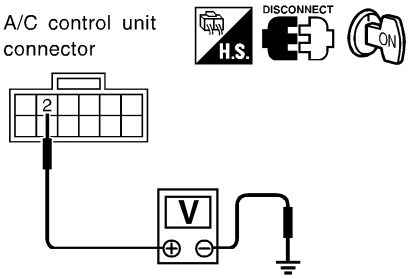

Voltmeter terminal		Voltage
(+)	(–)	
2	Body ground	Approx. 12V

ZHA017H

OK or NG

OK	▶	GO TO 2.
NG	▶	Check 10A fuse (No. 15) at fuse block.

2	CHECK BODY GROUND CIRCUIT FOR A/C CONTROL UNIT

Check for continuity between A/C control unit harness connector M31 terminal No. 6 and body ground.

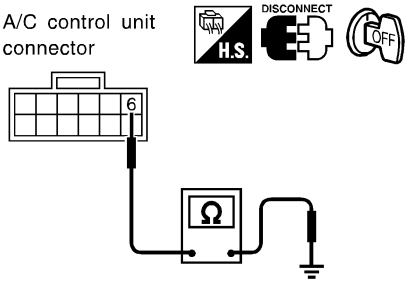

Terminal			Continuity
(+)		(–)	
Connector	Terminal (Wire color)		
M31	6 (B)	Ground	Yes

ZHA019H

OK or NG

OK	▶	**INSPECTION END**
NG	▶	If NG, repair harness or connector.

Intake Door

TROUBLE DIAGNOSIS PROCEDURE FOR INTAKE DOOR

=NMHA0135

Symptom:

- **Intake door does not change in VENT, B/L or FOOT mode.**

Inspection Flow

1. Confirm symptom by performing the following operational check.

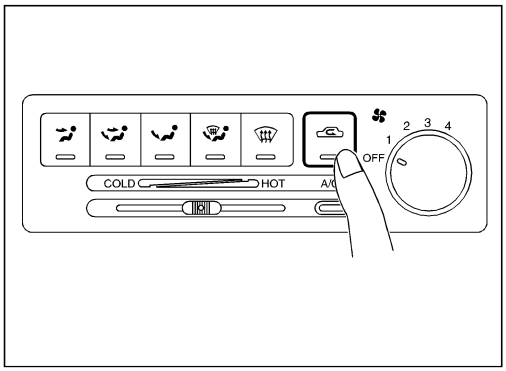

OPERATIONAL CHECK – Recirculation

1) Press recirculation switch.
   Recirculation indicator should light.
2) Listen for intake door position change (you should hear blower sound change slightly).

NOTE:
Confirm that the RECIRCULATION (REC) switch is canceled in the DEF ( ) and D/F ( ) modes.

If OK (symptom cannot be duplicated), perform complete operational check (*2).
If NG (symptom is confirmed), continue with STEP-2 following.

2. Check for any service bulletins.

3. Check intake door motor circuit. (*1)

OK

If the symptom still exists, perform a complete operational check (*2) and check for other symptoms.
[Refer to symptom table, (*3).]
Does another symptom exist?

Yes → Go to Trouble Diagnosis for related symptom.
[Another symptom exists.]

→ INSPECTION END

ZHA021H

*1: HA-33 *2: HA-28 *3: HA-27

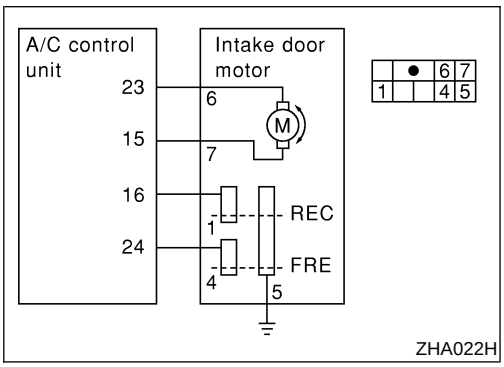

SYSTEM DESCRIPTION

NMHA0136

Intake Door Motor

NMHA0136S01

The intake door motor is installed on the blower unit. Using a link it opens and closes the intake door.
When RECIRCULATION switch is at REC (except DEF and D/F modes), the A/C control unit sets the intake door at the “RECIRCULATION” position.
RECIRCULATION switch is canceled by MODE switch in DEF and D/F modes.

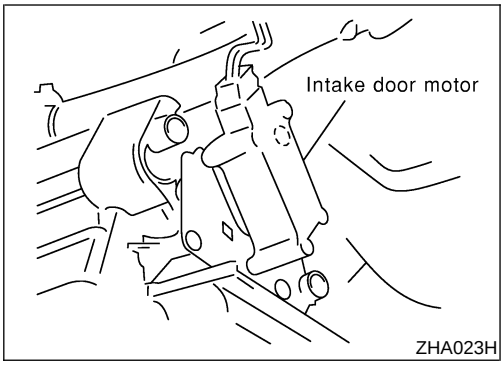

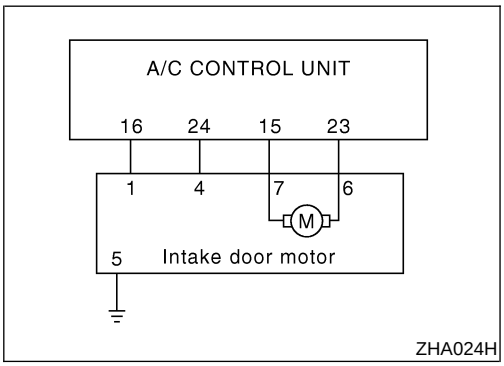

DIAGNOSTIC PROCEDURE

NMHA0090

SYMPTOM: Intake door motor does not operate normally.

1	CHECK BODY GROUND CIRCUIT FOR INTAKE DOOR MOTOR

1. Disconnect intake door harness connector.
2. Does continuity exist between intake door harness connector M48 terminal No. 5 (B) and body ground?

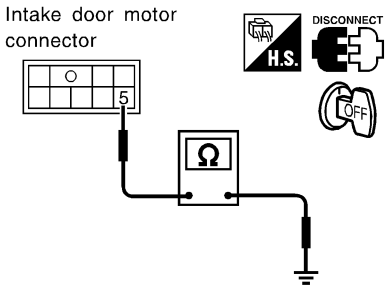

Terminal			Continuity
(+)		(–)	
Connector	Terminal (Wire color)		
M48	5 (B)	Ground	Yes

ZHA025H

Yes or No

Yes	▶	Reconnect intake door harness connector. GO TO 2.
No	▶	Repair harness or connector.

2	CHECK FOR A/C CONTROL UNIT OUTPUT

Are there approx. 12 volts between each A/C control unit connector M32 terminals No. 15 (G/B), 23 (G/W) and body ground.

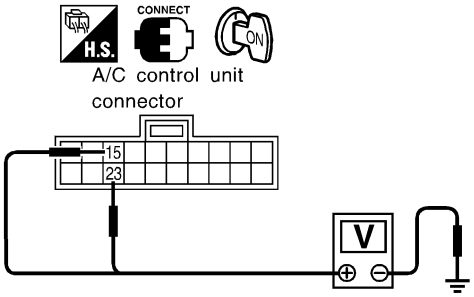

Recirculation switch condition	Terminal No. (+)	Terminal No. (–)	Condition	Voltage V
REC	15	Body ground	REC	12
	23			0
FRE	23		FRE	12
	15			0

0V: Approx. 0V
12V: Approx. 12V

ZHA026H

OK or NG

OK	▶	Disconnect A/C control unit connector and intake door motor connector. GO TO 3.
NG	▶	Replace A/C control unit.

3	CHECK CIRCUIT CONTINUITY BETWEEN A/C CONTROL UNIT AND INTAKE DOOR MOTOR

Check circuit continuity between each A/C control unit connector M32 terminal No. 15 (G/B), 16 (G), 23 (G/W) , 24 (W/B) and intake door motor connector M48 terminal No. 1 (G), 4 (W/B), 6 (G/W), 7 (G/B).

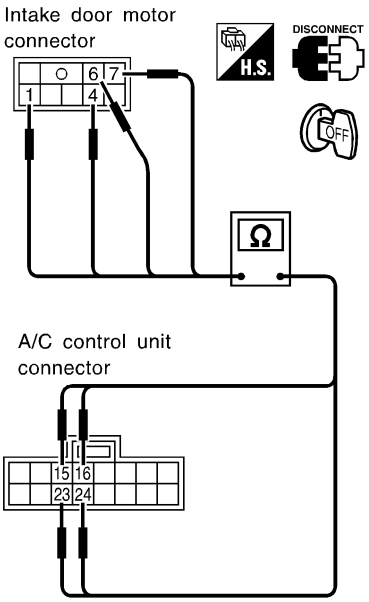

Terminal No.		Continuity
A/C CONTROL UNIT	Intake door motor	
23	6	Yes
15	7	
24	4	
16	1	

ZHA027H

Continuity should exist.
If OK, check harness for short.

OK or NG

OK	▶	Replace intake door motor.
NG	▶	Repair harness or connector.

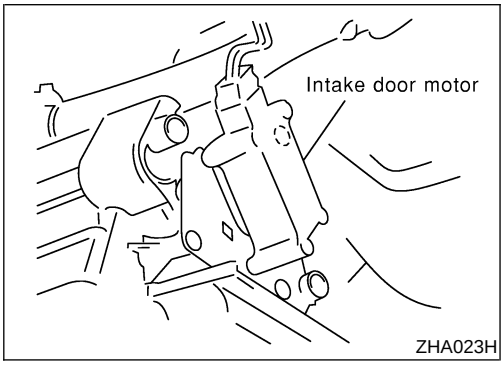

CONTROL LINKAGE ADJUSTMENT

NMHA0093

Intake Door Motor

NMHA0093S04

1. Install intake door motor on blower and intake unit. Ensure that the intake door motor lever is fitted into the slit portion of intake door link.
2. Connect the intake door motor harness connector.
3. Turn ignition switch to ON.
4. Check that intake door operates properly when RECIRCULATION switch is turned ON and OFF.

Blower Motor

TROUBLE DIAGNOSIS PROCEDURE FOR BLOWER MOTOR

=NMHA0138

Symptom:

- **Blower motor does not rotate at all.**

Inspection Flow

1. Confirm symptom by performing the following operational check.

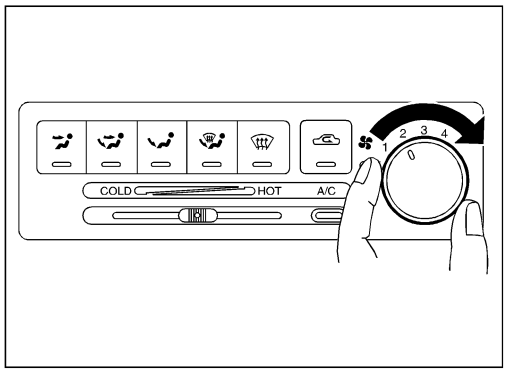

OPERATIONAL CHECK – Blower motor

1) Turn fan control dial to 1-speed.
   Blower should operate on 1-speed.
2) Then turn fan control dial to 2-speed.
3) Continue checking blower speed until all four speeds are checked.
4) Leave blower on 4-speed.

If OK (symptom cannot be duplicated), perform complete operational check (*2).
If NG (symptom is confirmed), continue with STEP-2 following.

2. Check for any service bulletins.

3. Check blower motor circuit. (*1)

OK

If the symptom still exists, perform a complete operational check (*2) and check for other symptoms.
[Refer to symptom table, (*3).]
Does another symptom exist?

Yes → Go to Trouble Diagnosis for related symptom.
[Another symptom exists.]

→ INSPECTION END

ZHA029H

*1: HA-38 *2: HA-28 *3: HA-27

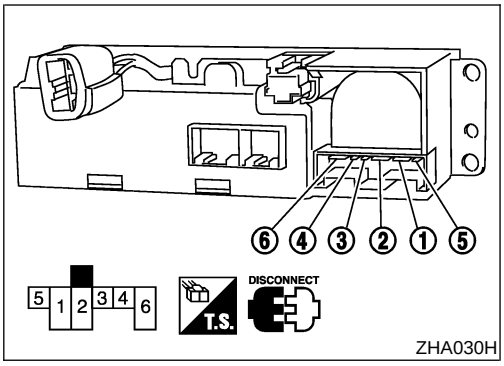

ELECTRICAL COMPONENTS INSPECTION

=NMHA0139

Fan Switch

NMHA0139S01

Check continuity between terminals at each switch position.

SWITCH POSITION	Continuity between terminals
OFF	
1	4 — 5 — 6
2	3 — 5 — 6
3	2 — 5 — 6
4	1 — 5 — 6

Blower Motor

NMHA0139S02

Confirm smooth rotation of the blower motor.

- Ensure that there are no foreign particles inside the intake unit.

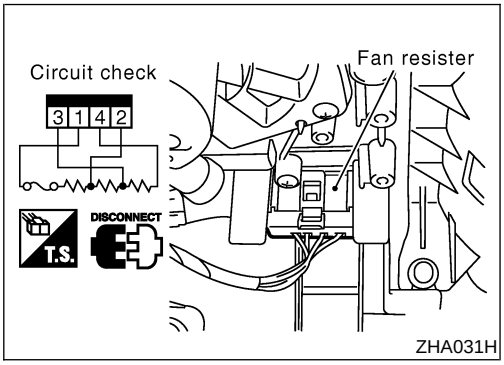

Fan Resistor

NMHA0139S03

Check resistance between terminals.

Terminal No.		Resistance
(+)	(−)	
2	1	Approx. 0.27 - 0.33Ω
3		Approx. 0.855 - 1.045Ω
4		Approx. 2.25 - 2.75Ω

DIAGNOSTIC PROCEDURE

=NMHA0089

SYMPTOM:

- **Blower motor does not rotate.**

Test group No.	INCIDENT
1	Fan fails to rotate.
2	Fan does not rotate at 1-speed.
3	Fan does not rotate at 2-speed.
4	Fan does not rotate at 3-speed.
5	Fan does not rotate at 4-speed.

1	**DIAGNOSTIC PROCEDURE**	
Check if blower motor rotates properly at each fan speed. Conduct checks as per table above.		
1	▶	GO TO 2.
2, 3, 4	▶	GO TO 8.
5	▶	GO TO 9.

2	CHECK POWER SUPPLY FOR BLOWER MOTOR

1. Disconnect blower motor harness connector.
2. Are there approx. 12 volts between blower motor harness connector M53 terminal No. 2 (L/W) and body ground?

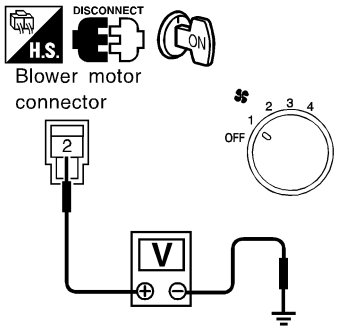

ZHA032H

Yes or No

Yes	▶	GO TO 3.
No	▶	Check 15A (No. 19 and No. 24) fuses at fuse block. Refer to EL-11, "Wiring Diagram — POWER —". Check blower relay.

3	CHECK CIRCUIT CONTINUITY FOR BLOWER MOTOR

1. Turn fan control switch to any position except OFF.
2. Check circuit continuity between blower motor harness connector M53 terminal No. 1 (L) and body ground.

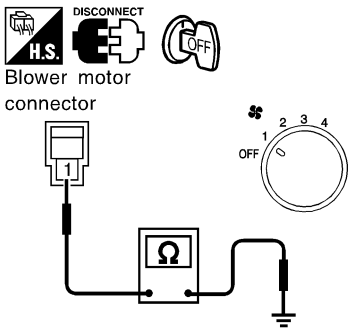

ZHA033H

Continuity should exist.
If OK, check harness for short.

OK or NG

OK	▶	GO TO 4.
NG	▶	Reconnect blower motor harness connector. GO TO 5.

4	CHECK BLOWER MOTOR	
(Refer to Electrical Components Inspection.) (HA-37)		
	OK or NG	
OK	▶	INSPECTION END
NG	▶	Replace blower motor.

5	CHECK BLOWER MOTOR CIRCUIT BETWEEN BLOWER MOTOR AND RESISTOR	
1. Disconnect resistor harness connector. 2. Are there approx. 12 volts between resistor harness connector M52 terminal No. 1 (L) and body ground?		
	Yes or No	
Yes	▶	Disconnect fan switch harness connector. GO TO 7.
No	▶	Disconnect blower motor and resistor harness connectors. GO TO 6.

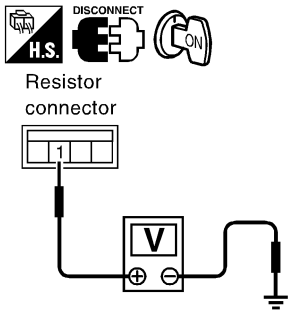

ZHA034H

6	CHECK CIRCUIT CONTINUITY BETWEEN BLOWER MOTOR AND RESISTOR

Check circuit continuity between blower motor harness connector M53 terminal No. 1 (L) and resistor harness connector M52 terminal No. 1 (L).

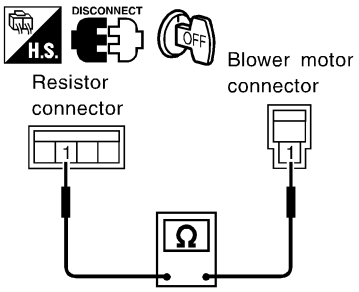

ZHA035H

Continuity should exist.
If OK, check harness for short.

OK or NG

OK	▶	GO TO 7.
NG	▶	Repair harness or connector.

7	CHECK GROUND CIRCUIT FOR FAN SWITCH

Check circuit continuity between fan switch harness connector M33 terminal No. 6 (R/B) and body ground.

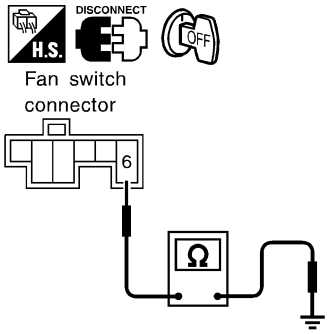

ZHA036H

OK or NG

OK	▶	GO TO 8.
NG	▶	Repair harness or connector.

8	CHECK RESISTOR AFTER DISCONNECTING IT

(Refer to Electrical Components Inspection.)
(HA-37)

OK or NG

OK	▶	Reconnect resistor harness connector. GO TO 9.
NG	▶	Replace resistor.

9	CHECK FAN SWITCH CIRCUIT

Are there approx. 12 volts between each fan switch harness connector M33 terminal No. 1 (L), 2 (L/R), 3 (G/R), 4 (L/B) and body ground?

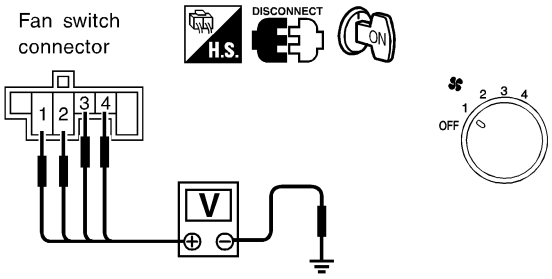

Test group No.	Terminal No. (+)	Terminal No. (–)	Voltage
2	4	Body ground	Approx. 12V
3	3		
4	2		
5	1		

ZHA037H

Yes or No

Yes	▶	GO TO 11.
No	▶	GO TO 10.

10	CHECK CIRCUIT CONTINUITY BETWEEN FAN SWITCH AND RESISTOR

Check circuit continuity between fan switch harness connector M33 terminal No. 1 (L), 2 (L/R), 3 (G/R), 4 (L/B) and resistor harness connector M52 terminal No. 1 (L), 2 (L/R), 3 (G/R), 4 (L/B).

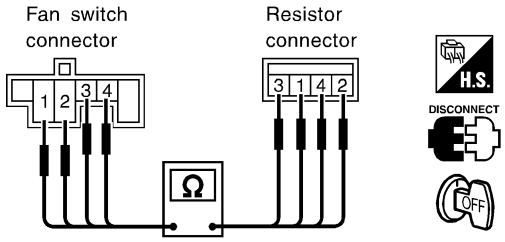

Continuity should exist.

Terminal No. Fan switch	Terminal No. Resistor	Continuity
1	1	Yes
2	2	
3	3	
4	4	

ZHA038H

OK or NG

OK	▶	Check harness for short.
NG	▶	Repair harness or connector.

11	CHECK FAN SWITCH AFTER DISCONNECTING IT

(Refer to Electrical Components Inspection.)
(HA-37)

OK or NG

OK	▶	INSPECTION END
NG	▶	Replace fan switch.

Insufficient Cooling

TROUBLE DIAGNOSIS PROCEDURE FOR INSUFFICIENT COOLING

=NMHA0150

Symptom:

- **Insufficient Cooling.**

Inspection Flow

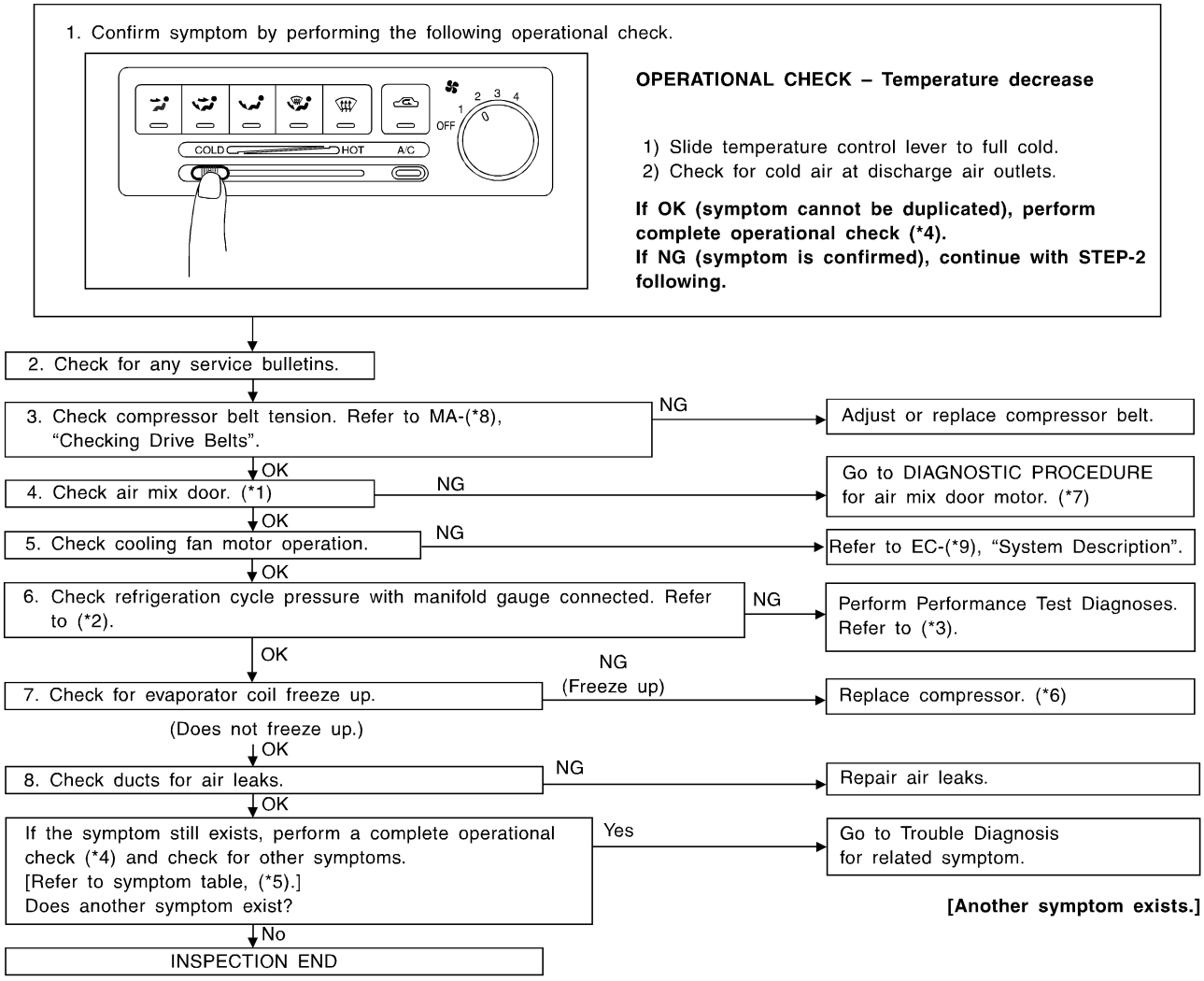

ZHA018H

*1: HA-52	*4: HA-28	*7: HA-52
*2: HA-46	*5: HA-27	*8: MA-6
*3: HA-44	*6: HA-81	*9: EC-120

PERFORMANCE TEST DIAGNOSES

NMHA0082

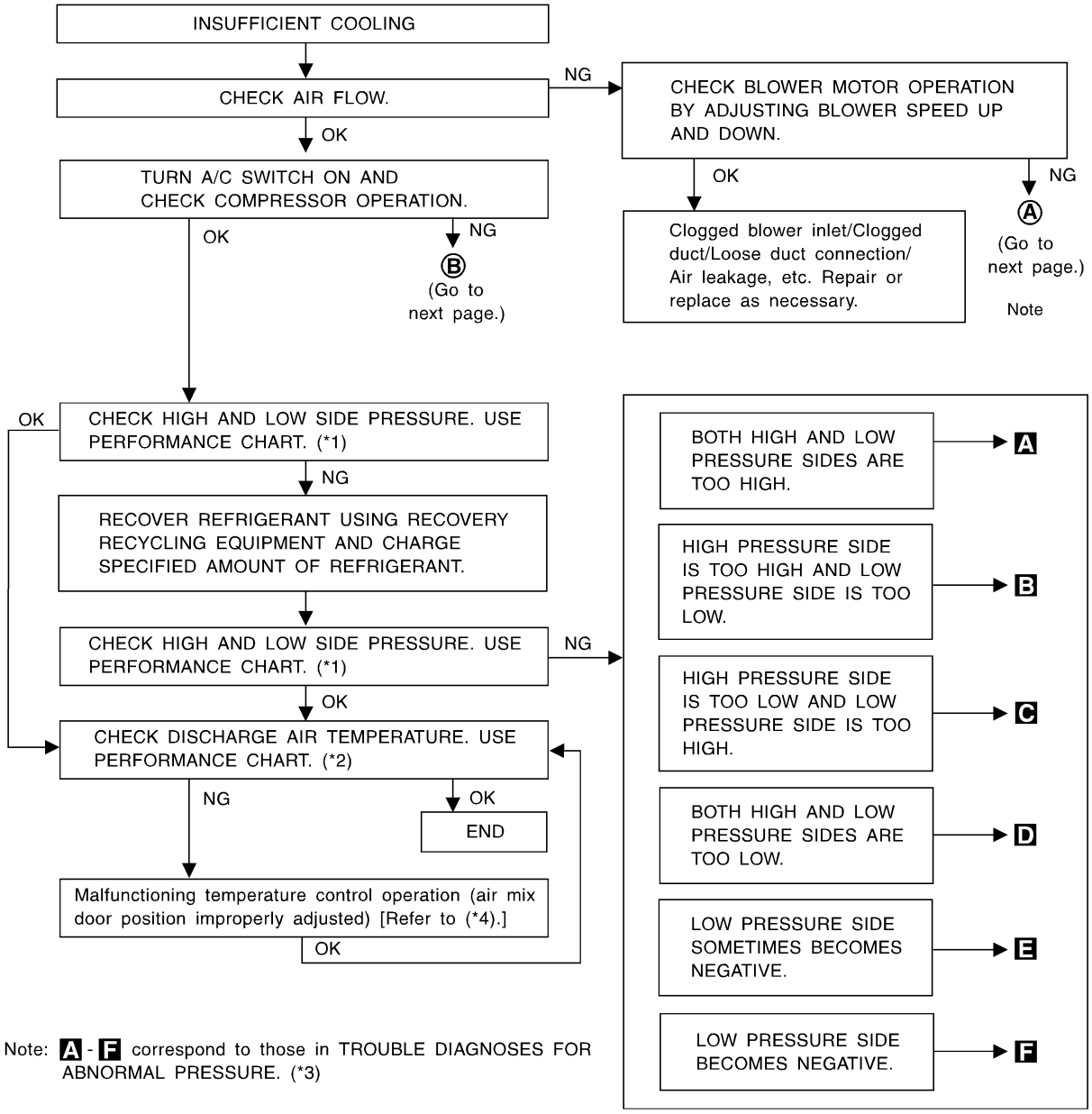

Note: **A** - **F** correspond to those in TROUBLE DIAGNOSES FOR ABNORMAL PRESSURE. (*3)

SHA419F

*1: HA-46
*2: HA-46
*3: HA-47
*4: HA-52

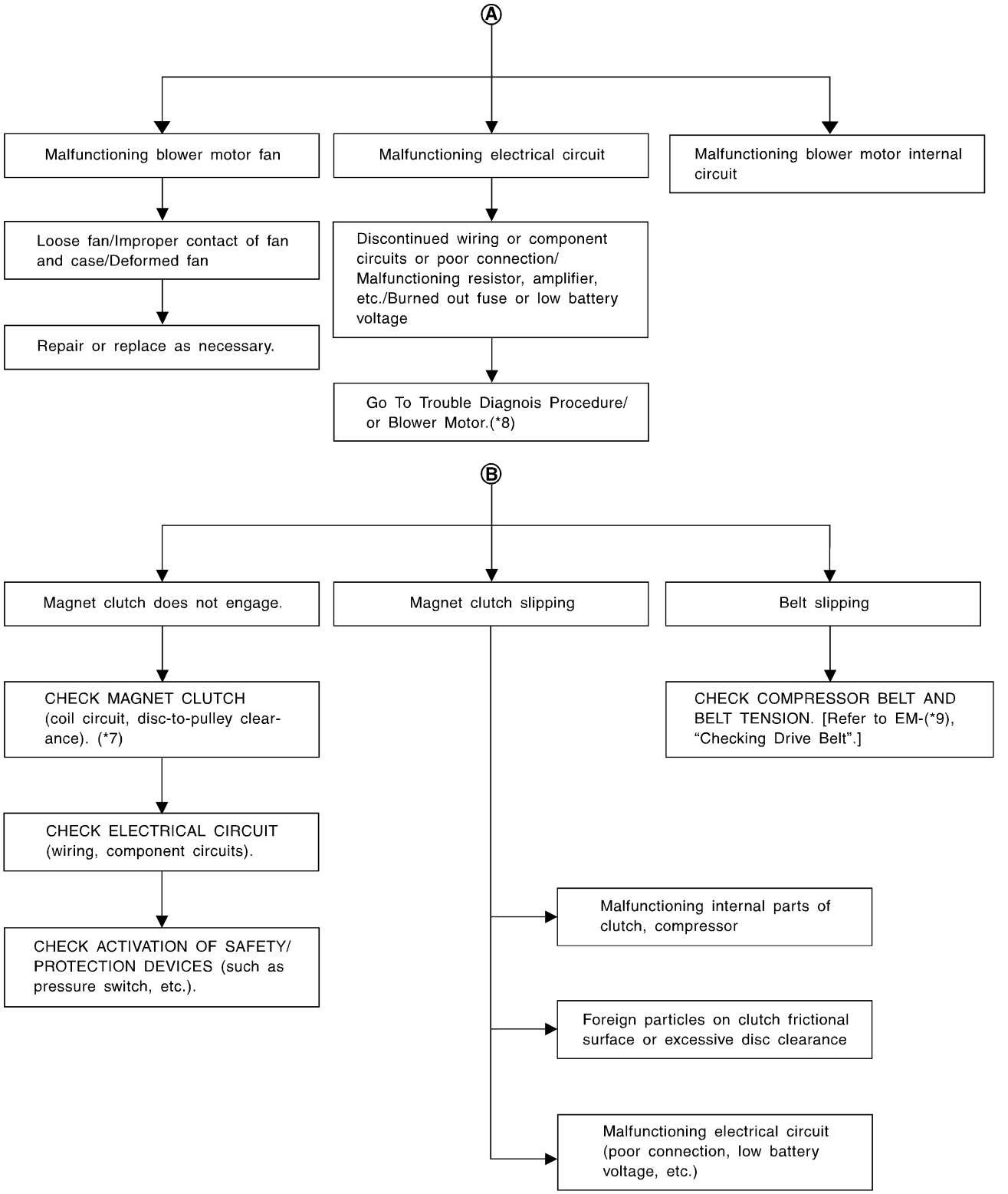

SHA334FB

*7: HA-84 *8: HA-36 *9: EM-16

PERFORMANCE TEST

=NMHA0083

Test Condition

NMHA0083S01

Testing must be performed as follows:

Vehicle location	Indoors or in the shade (in a well-ventilated place)
Doors	Closed
Door windows	Open
Hood	Open
TEMP.	Max. COLD
Discharge Air	Face Vent
REC switch	(Recirculation) set
FAN speed	High speed
Engine speed	Idle speed
Operate the air conditioning system for 10 minutes before taking measurements.	

Test Reading

NMHA0083S02

Recirculating-to-discharge Air Temperature Table

NMHA0083S0201

Inside air (Recirculating air) at blower assembly inlet		Discharge air temperature at center ventilator °C (°F)
Relative humidity %	Air temperature °C (°F)	
50 - 60	15 (59)	4.4 - 5.8 (40 - 42)
	20 (68)	8.0 - 10.0 (46 - 50)
	25 (77)	12.0 - 14.5 (54 - 58)
	30 (86)	16.0 - 19.0 (61 - 66)
60 - 70	15 (59)	5.8 - 7.8 (42 - 46)
	20 (68)	10.0 - 12.0 (50 - 54)
	25 (77)	14.5 - 17.0 (58 - 63)
	30 (86)	19.0 - 22.4 (66 - 72)

Ambient Air Temperature-to-operating Pressure Table

NMHA0083S0202

Ambient air		High-pressure (Discharge side) kPa (kg/cm^2, psi)	Low-pressure (Suction side) kPa (kg/cm^2, psi)
Relative humidity %	Air temperature °C (°F)		
50 - 70	25 (77)	1,059 - 1,285 (10.8 - 13.1, 154 - 186)	186 - 235 (1.9 - 2.4, 27 - 34)
	30 (86)	1,206 - 1,471 (12.3 - 15.0, 175 - 213)	216 - 275 (2.2 - 2.8, 31 - 40)
	35 (95)	1,363 - 1,667 (13.9 - 17.0, 198 - 242)	235 - 304 (2.4 - 3.1, 34 - 44)
	40 (104)	1,520 - 1,854 (15.5 - 18.9, 220 - 269)	294 - 363 (3.0 - 3.7, 43 - 53)

TROUBLE DIAGNOSES FOR ABNORMAL PRESSURE

=NMHA0084

Whenever the system's high and/or low side pressure is abnormal, diagnose using a manifold gauge. The marker above the gauge scale in the following tables indicates the standard (normal) pressure range. Since the standard (normal) pressure, however, differs from vehicle to vehicle, refer to HA-46 ("Ambient air temperature-to-operating pressure table").

Both High and Low-pressure Sides are Too High.

NMHA0084S01

Gauge indication	Refrigerant cycle	Probable cause	Corrective action
Both high and low-pressure sides are too high. **A** 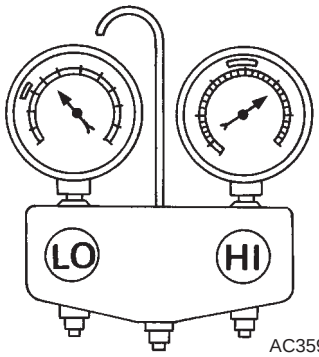 AC359A	● Pressure is reduced soon after water is splashed on condenser.	Excessive refrigerant charge in refrigeration cycle	Reduce refrigerant until specified pressure is obtained.
	Air suction by cooling fan is insufficient.	Insufficient condenser cooling performance ↓ 1. Condenser fins are clogged. 2. Improper fan rotation of cooling fan	● Clean condenser. ● Check and repair cooling fan as necessary.
	● Low-pressure pipe is not cold. ● When compressor is stopped, high-pressure value quickly drops by approximately 196 kPa (2 kg/cm^2, 28 psi). It then decreases gradually thereafter.	Poor heat exchange in condenser (After compressor operation stops, high pressure decreases too slowly.) ↓ Air in refrigeration cycle	Evacuate repeatedly and recharge system.
	Engine tends to overheat.	Engine cooling systems malfunction.	Check and repair each engine cooling system.
	● An area of the low-pressure pipe is colder than areas near the evaporator outlet. ● Plates are sometimes covered with frost.	● Excessive liquid refrigerant on low-pressure side ● Excessive refrigerant discharge flow ● Expansion valve is open a little compared with the specification. ↓ 1. Improper thermal valve installation 2. Improper expansion valve adjustment	Replace expansion valve.

High-pressure Side is Too High and Low-pressure Side is Too Low.

NMHA0084S02

Gauge indication	Refrigerant cycle	Probable cause	Corrective action
High-pressure side is too high and low-pressure side is too low. B 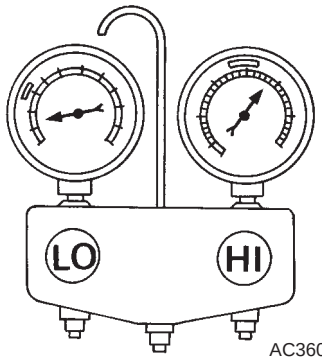 AC360A	Upper side of condenser and high-pressure side are hot, although liquid tank is not so hot.	High-pressure tube or parts located between compressor and condenser are clogged or crushed.	● Check and repair or replace malfunctioning parts. ● Check lubricant for contamination.

High-pressure Side is Too Low and Low-pressure Side is Too High.

NMHA0084S03

Gauge indication	Refrigerant cycle	Probable cause	Corrective action
High-pressure side is too low and low-pressure side is too high. C 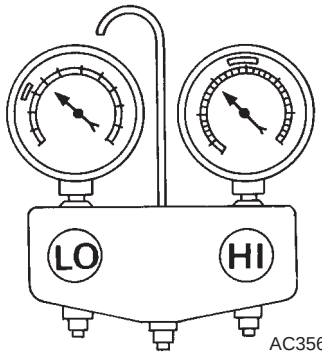 AC356A	High and low-pressure sides become equal soon after compressor operation stops.	Compressor pressure operation is improper. ↓ Damaged inside compressor packings	Replace compressor.
	No temperature difference between high and low-pressure sides	Compressor pressure operation is improper. ↓ Damaged inside compressor packings.	Replace compressor.

Both High- and Low-pressure Sides are Too Low.

NMHA0084S04

Gauge indication	Refrigerant cycle	Probable cause	Corrective action
Both high- and low-pressure sides are too low. **D** 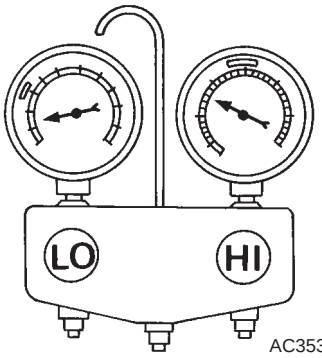 AC353A	● There is a big temperature difference between receiver drier outlet and inlet. Outlet temperature is extremely low. ● Liquid tank inlet and expansion valve are frosted.	Liquid tank is partly clogged.	● Replace liquid tank. ● Check lubricant for contamination.
	● Temperature of expansion valve inlet is extremely low compared with areas near liquid tank. ● Expansion valve inlet may be frosted. ● Temperature difference occurs somewhere in high-pressure side	High-pressure pipe located between receiver drier and expansion valve is clogged.	● Check and repair malfunctioning parts. ● Check lubricant for contamination.
	● Expansion valve and liquid tank are warm or only cool when touched.	Low refrigerant charge ↓ Leaking fittings or components	Check refrigerant for leaks. Refer to "Checking Refrigerant Leaks", HA-91.
	There is a big temperature difference between expansion valve inlet and outlet while the valve itself is frosted.	Expansion valve closes a little compared with the specification. ↓ 1. Improper expansion valve adjustment 2. Malfunctioning thermal valve 3. Outlet and inlet may be clogged.	● Remove foreign particles by using compressed air. ● Check lubricant for contamination.
	An area of the low-pressure pipe is colder than areas near the evaporator outlet.	Low-pressure pipe is clogged or crushed.	● Check and repair malfunctioning parts. ● Check lubricant for contamination.
	Air flow volume is not enough or is too low.	Evaporator is frozen.	● Replace compressor. ● Check thermo control amp. operation.

Low-pressure Side Sometimes Becomes Negative.

NMHA0084S05

Gauge indication	Refrigerant cycle	Probable cause	Corrective action
Low-pressure side sometimes becomes negative. **E** 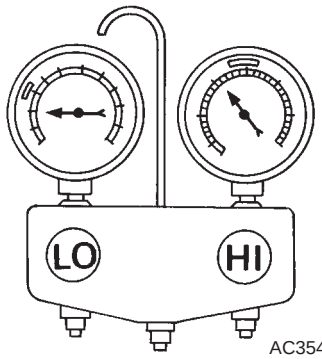 AC354A	● Air conditioning system does not function and does not cyclically cool the compartment air. ● The system constantly functions for a certain period of time after compressor is stopped and restarted.	Refrigerant does not discharge cyclically. ↓ Moisture is frozen at expansion valve outlet and inlet. ↓ Water is mixed with refrigerant.	● Remove water from refrigerant or replace refrigerant. ● Replace liquid tank.

Low-pressure Side Becomes Negative.

NMHA0084S06

Gauge indication	Refrigerant cycle	Probable cause	Corrective action
Low-pressure side becomes negative. F 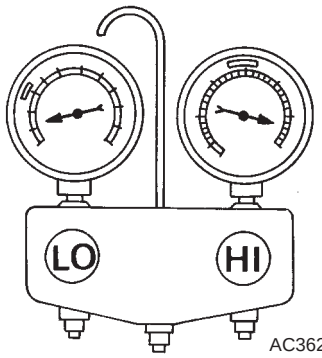 AC362A	Liquid tank or front/rear side of expansion valve's pipe is frosted or dewed.	High-pressure side is closed and refrigerant does not flow. ↓ Expansion valve or liquid tank is frosted.	Leave the system at rest until no frost is present. Start it again to check whether or not the problem is caused by water or foreign particles. ● If water is the cause, initially cooling is okay. Then the water freezes causing a blockage. Remove water from refrigerant or replace refrigerant. ● If due to foreign particles, remove expansion valve and remove particles with dry and compressed air (not shop air). ● If either of the above methods cannot correct the problem, replace expansion valve. ● Replace liquid tank. ● Check lubricant for contamination.

Insufficient Heating

TROUBLE DIAGNOSIS PROCEDURE FOR INSUFFICIENT HEATING

=NMHA0140

Symptom:

- **Insufficient Heating.**

Inspection Flow

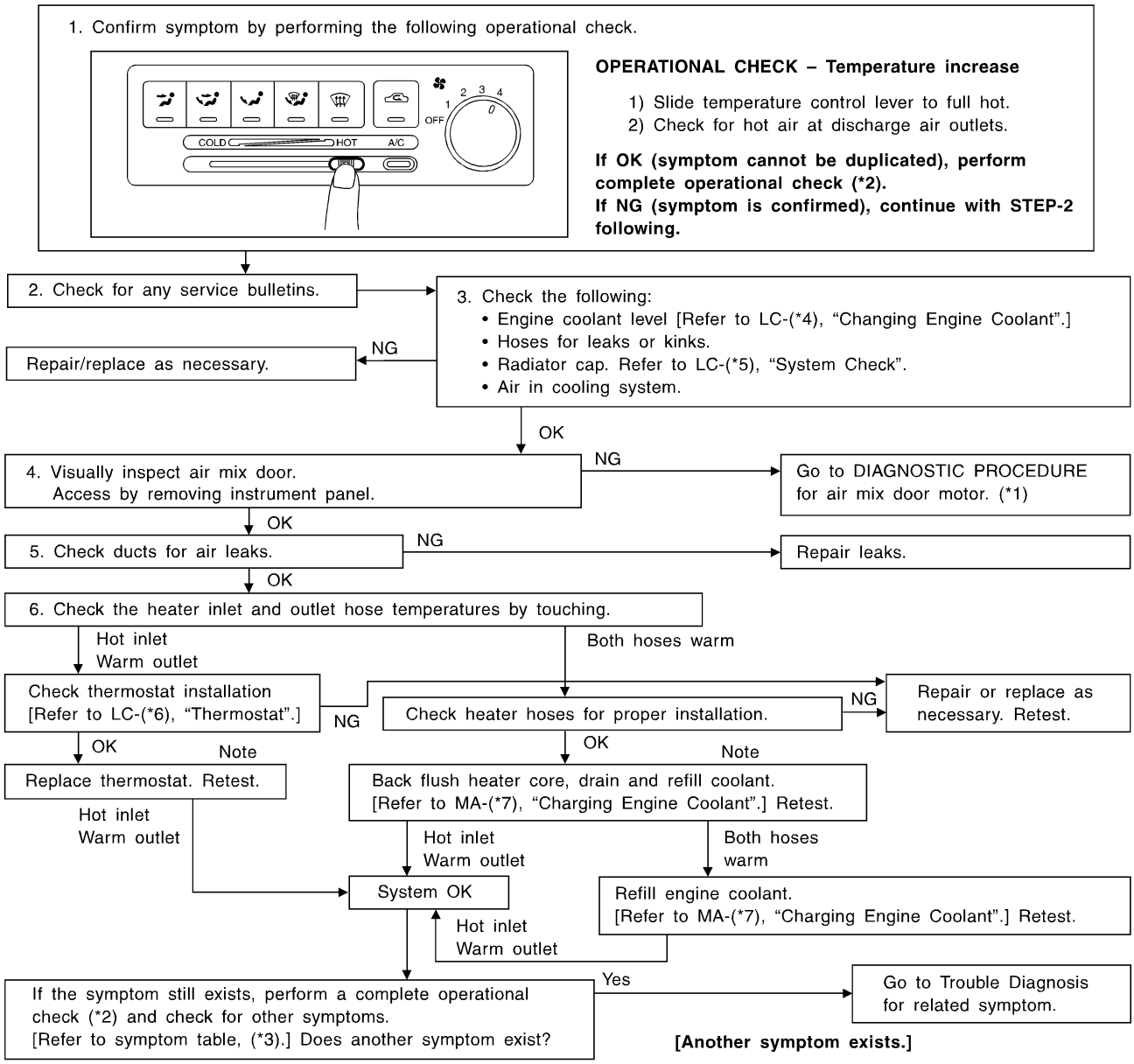

ZHA039H

*1: HA-52
*2: HA-28
*3: HA-27
*4: LC-15
*5: LC-11
*6: LC-13
*7: LC-16

Air Mix Door

TROUBLE DIAGNOSIS PROCEDURE FOR AIR MIX DOOR MOTOR

=NMHA0256

SYMPTOM:

- **Air mix door motor does not operate normally.**

INSPECTION FLOW

1. Confirm symptom by performing the following operational check.

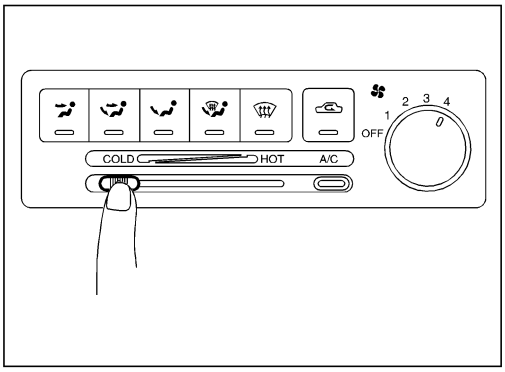

OPERATIONAL CHECK – Temperature decrease and increase

1. Check Temperature Decrease
a) Slide temperature control lever to full cold.
b) Check for cold air at discharge air outlets.

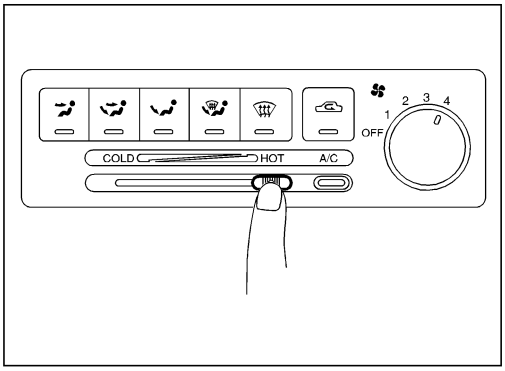

2. Check Temperature Increase
a) Slide temperature control lever to full hot.
b) Check for hot air at discharge air outlets.

If OK (symptom cannot be duplicated). Perform complete operational check. (*3)
If NG (symptom is confirmed), continue with STEP-2 following.

2. Check for any service bulletins.

3. Check air mix door. (*1)

OK

4. Check air mix door motor circuit. (*2)

OK

If the symptom still exists, perform a complete operational check and check for other symptoms.
[Refer to symptom table.]
Does another symptom exist?

Yes → Go to Trouble Diagnosis for related symptom.

[Another symptom exists.]

No → INSPECTION END

ZHA040H

*1: HA-58 *2: HA-54 *3: HA-28

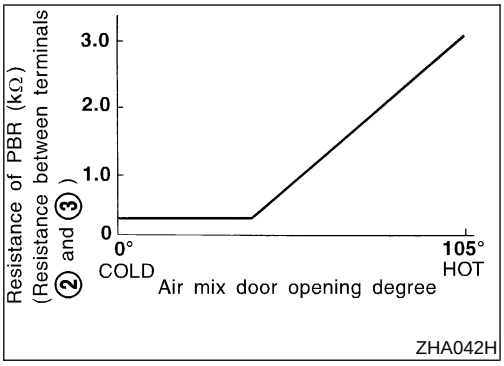

ZHA042H

CONTROL SYSTEM INPUT COMPONENT

NMHA0258

PBR

NMHA0258S01

Measure resistance between connector M27 terminal No. 2 and 3 at vehicle harness side.

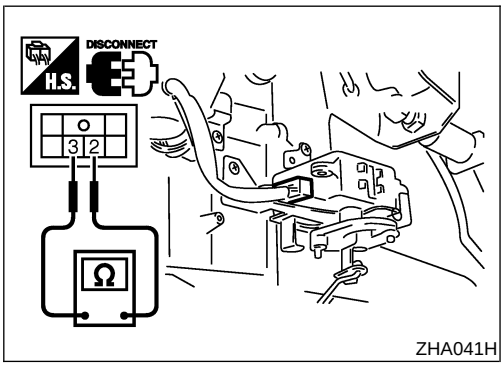

ZHA041H

PTC

NMHA0258S02

Check resistance between connector M35 terminal No. 21 and + at each lever position.

Terminal No.		Lever position	Resistance
+	21	Full cold	Approx. 0 kΩ
		Full hot	Approx. 1 kΩ

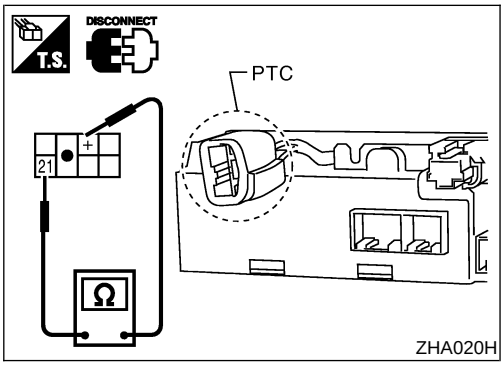

ZHA020H

DIAGNOSTIC PROCEDURE

=NMHA0259

SYMPTOM:

- **Air mix door motor does not operate normally.**

1	CHECK POWER SUPPLY FOR A/C CONTROL UNIT	
Refer to "MAIN POWER SUPPLY AND GROUND CIRCUIT CHECK", HA-31.		
	OK or NG	
OK	▶	GO TO 2.
NG	▶	Repair or replace.

2	CHECK PBR	
Refer to HA-53.		
	OK or NG	
OK	▶	GO TO 3.
NG	▶	Replace air mix door motor.

3	CHECK PTC	
Refer to HA-53.		
	OK or NG	
OK	▶	GO TO 4.
NG	▶	Replace PTC.

4	CHECK POWER SUPPLY FOR PTC.	
Are there approx. 12 volts between PTC harness connector M35 terminal No. + (L/OR) and body ground?		
	Yes or No	
Yes	▶	Disconnect PTC connector. GO TO 5.
No	▶	Check 10A (No. 19) fuse at fuse block. Refer to EL-8, "Wiring Diagram — POWER —".

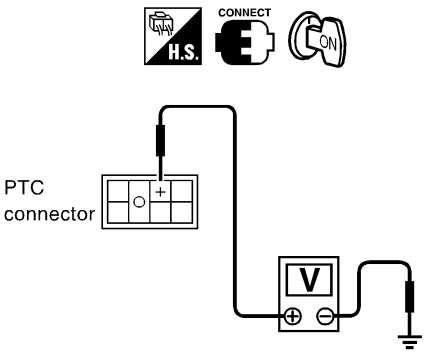

ZHA089H

5	CHECK GROUND CIRCUIT FOR PTC.

Check circuit continuity between PTC harness connector M35 terminal No. G (B) and body ground.

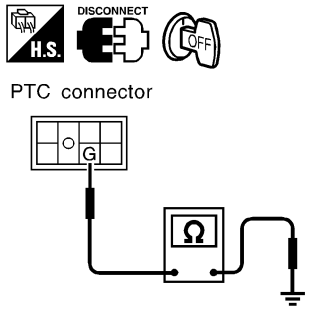

ZHA090H

OK or NG

OK	▶	Disconnect A/C control unit connector. GO TO 6.
NG	▶	Repair harness or connector.

6	CHECK CIRCUIT CONTINUITY BETWEEN AIR MIX DOOR MOTOR AND A/C CONTROL UNIT

Check circuit continuity between PTC harness connector M35 terminal No. 21 (W/L), + (L/OR) and A/C control unit harness connector M31 terminal No. 2 (L/OR), M32 terminal No. 21 (W/L).

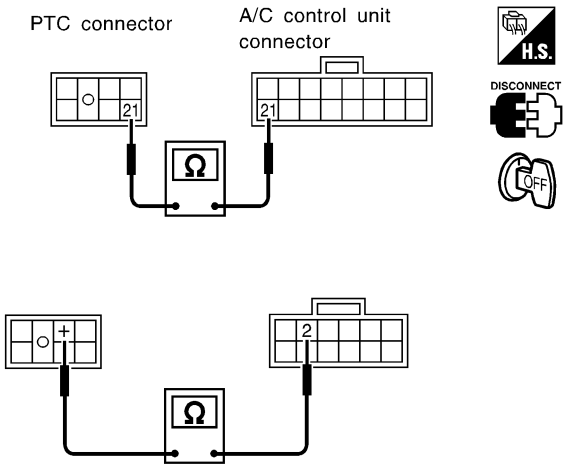

ZHA091H

Continuity should exist.
If OK, check harness for short.

OK or NG

OK	▶	GO TO 7.
NG	▶	Repair harness or connector.

7	CHECK FOR OUTPUT OF AUTO AMP.

Are there approx. 12 volts between air mix door motor harness connector M27 terminal No. 4 (R), 5 (R/W) and body ground?

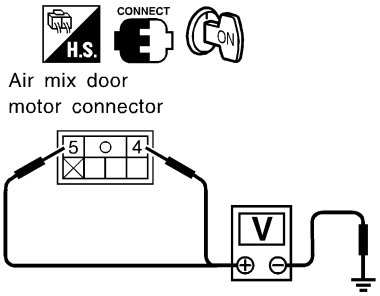

Air mix door operation	Terminal No.		Voltage
	(+)	(–)	
Cold → Hot	4	Body ground	Approx. 12V
Hot → Cold	5		

ZHA069H

Yes or No

Yes	▶	GO TO 8.
No	▶	Replace A/C control unit.

8	CHECK POWER SUPPLY FOR PBR.

Are there approx. 12 volts between air mix door motor harness connector M75 terminal No. 3 (L/OR) and body ground?

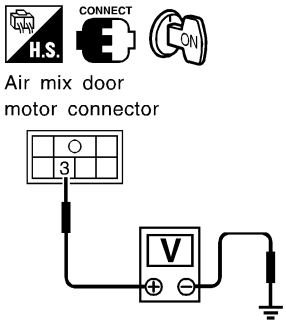

ZHA043H

Yes or No

Yes	▶	Disconnect air mix door motor connector. GO TO 9.
No	▶	Check 10A (No. 19) fuse at fuse block. Refer to EL-8, "Wiring Diagram — POWER —".

9	CHECK GROUND CIRCUIT FOR PBR.

Check circuit continuity between air mix door motor harness connector M27 terminal No. 1 (B) and body ground.

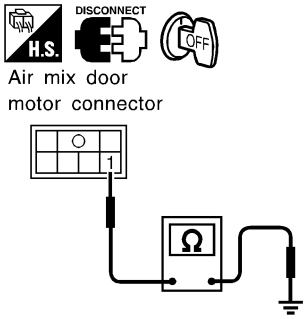

ZHA044H

OK or NG

OK	▶	Disconnect A/C control unit connector. GO TO 10.
NG	▶	Repair harness or connector.

10	CHECK CIRCUIT CONTINUITY BETWEEN AIR MIX DOOR MOTOR AND A/C CONTROL UNIT

Check circuit continuity between air mix door motor harness connector M27 terminal No. 4 (R), 5 (L/W) and A/C control unit harness connector M32 terminal No. 14 (R/W), 22 (R).

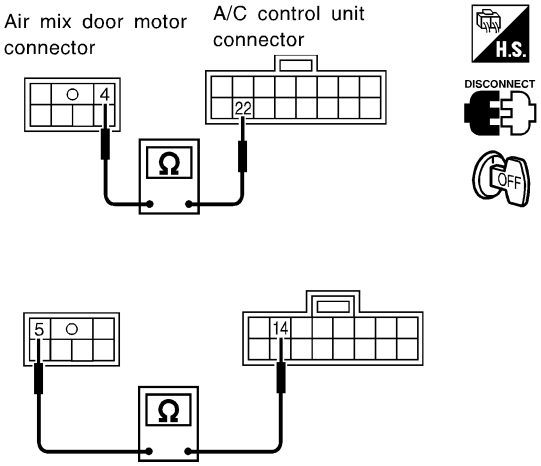

ZHA045H

Continuity should exist.
If OK, check harness for short.

OK or NG

OK	▶	Replace air mix door motor.
NG	▶	Repair harness or connector.

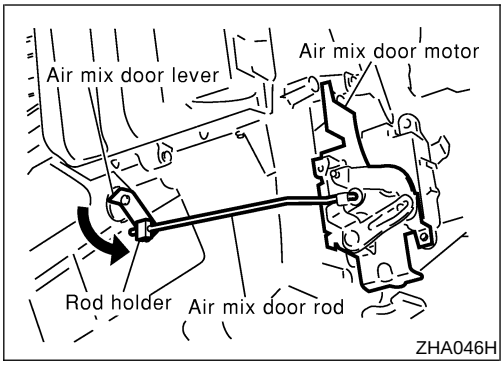

CONTROL LINKAGE ADJUSTMENT

NMHA0257

Air Mix Door

NMHA0257S01

Push air mix door lever in direction of arrow and attach air mix door to rod holder.

1. Install air mix door motor on heater unit and connect it to main harness.
   Make sure lever of air mix door is fitted into the slit of the air mix door link.
2. Turn ignition switch to ON.
3. Slide temperature control lever to full cold.
4. Move air mix door by hand to maximum cold position and hold it.
5. While holding air mix door, adjust length of temperature control rod and connect it to air mix door lever.
6. Check that air mix door operates properly when temperature control lever is slid to full hot and full cold.

Mode Door

TROUBLE DIAGNOSIS PROCEDURE FOR MODE DOOR

=NMHA0142

Symptom:

- **Air outlet does not change.**

Inspection Flow

1. Confirm symptom by performing the following operational check.

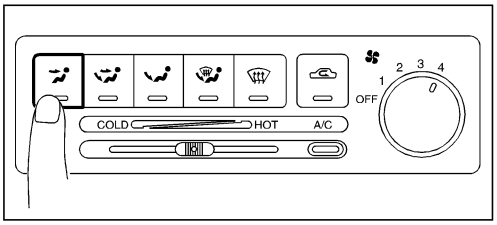

OPERATIONAL CHECK – Discharge air.

1) Push mode switch.

Discharge air flow

Mode switch	Air outlet/distribution		
	Face	Foot	Defroster
	100%	–	–
	60%	40%	–
	–	80%	20%
	–	60%	40%
	–	–	100%

2) Confirm that discharge air comes out according to the air distribution table at left.
Refer to “Discharge Air Flow” in “DESCRIPTION” (*4).

- **If OK (symptom cannot be duplicated), perform complete operational check (*2).**
  If NG (symptom is confirmed), continue with STEP-2 following.

NOTE :
Confirm that the compressor clutch is engaged (visual inspection) and intake door position is at FRESH when DEF is selected.
Intake door position is checked in the next step.

2. Check for any service bulletins.

3. Check mode door operation. (*1)

NG → Go to Trouble Diagnosis Procedure for mode door motor. (*5)

OK → If the symptom still exists, perform a complete operational check (*2) and check for other symptoms.
[Refer to symptom table, (*3).]
Does another symptom exist?

Yes → Go to Trouble Diagnosis for related symptom.
[Another symptom exists.]

No → INSPECTION END

ZHA047H

*1: HA-61
*2: HA-28
*3: HA-27
*4: HA-17
*5: HA-60

DIAGNOSTIC PROCEDURE

=NMHA0260

SYMPTOM:

- **Mode door motor does not operate normally.**

1	CHECK POWER SUPPLY FOR A/C CONTROL UNIT	
Refer to "MAIN POWER SUPPLY AND GROUND CIRCUIT CHECK", HA-31.		
OK or NG		
OK	▶	GO TO 2.
NG	▶	Repair or replace.

2	CHECK FOR OUTPUT OF A/C CONTROL UNIT	
Are there approx. 12 volts between mode door motor harness connector M28 terminal No. 7 (G/OR), 8 (G/Y) and body ground?		
Yes or No		
Yes	▶	Disconnect mode door motor and A/C control unit connector. GO TO 4.
No	▶	Disconnect mode door motor and A/C control unit connector. GO TO 3.

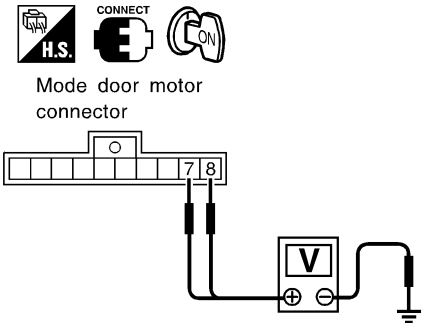

Mode door operation	Terminal No. (+)	Terminal No. (−)	Voltage
VENT → DEF	7	Body ground	Approx. 12V
DEF → VENT	8		

ZHA048H

3	CHECK CIRCUIT CONTINUITY BETWEEN MODE DOOR MOTOR AND A/C CONTROL UNIT	
Check circuit continuity between mode door motor harness connector M28 terminal No. 7 (G/OR), 8 (G/Y) and A/C control unit harness connector M32 terminal No. 17 (G/Y), 25 (G/OR).		
Continuity should exist. If OK, check harness for short.		
OK or NG		
OK	▶	Replace A/C control unit.
NG	▶	Repair harness or connector.

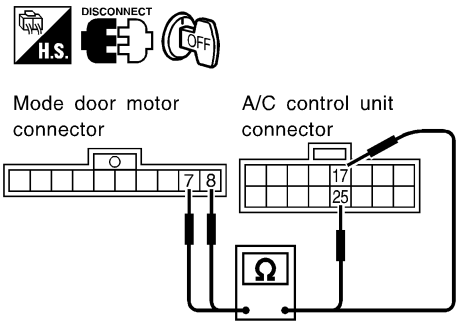

ZHA049H

4	CHECK CIRCUIT CONTINUITY BETWEEN MODE DOOR MOTOR AND A/C CONTROL UNIT

Check circuit continuity between mode door motor harness connector M28 terminal No. 1 (B/W), 2 (R/G), 3 (L/R), 4 (L/W), 5 (L/B), 6 (L) and A/C control unit harness connector M32 terminal No. 18 (R/G), 19 (L/W), 20 (L), 26 (B/W), 27 (L/R), 28 (L/B).

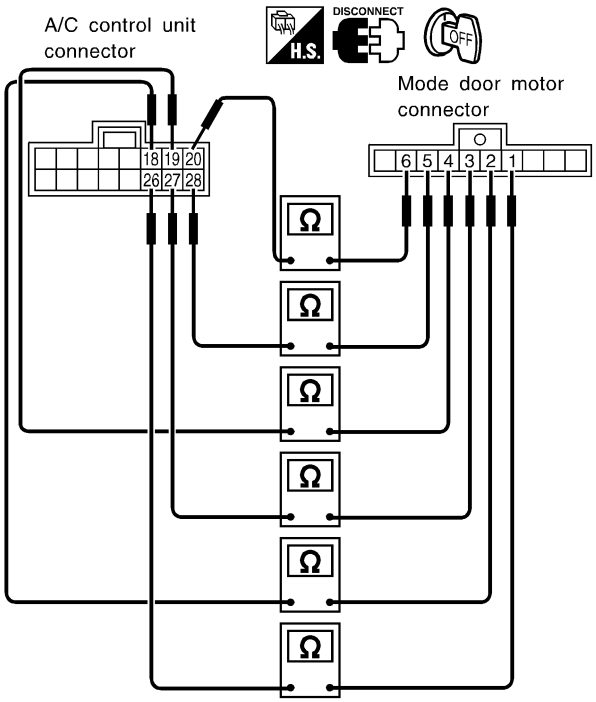

ZHA050H

Continuity should exist.
If OK, check harness for short.

OK or NG

OK	▶	Replace air mix door motor.
NG	▶	Repair harness or connector.

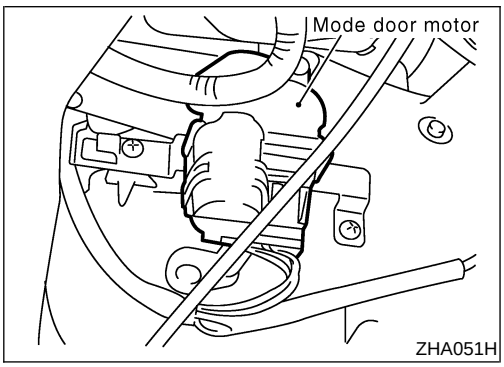

ZHA051H

CONTROL LINKAGE ADJUSTMENT

NMHA0151

Mode Door

NMHA0151S01

1. Install mode door motor on heater unit and connect it to main harness.
   Make sure lever of mode door motor is fitted into the slit of mode door link.
2. Turn ignition switch to ON.
3. Turn VENT switch ON.
4. Turn DEF switch ON. Check that slide link operates at the full-open position. Also turn DEF switch ON to check that slide link operates at the fully-open position.

Bi-Level Door

TROUBLE DIAGNOSIS PROCEDURE FOR BI-LEVEL DOOR

=NMHA0274

Symptom:

- **Bi-level door motor does not operate normally.**

Inspection Flow

1. Confirm symptom by performing the following operational check.

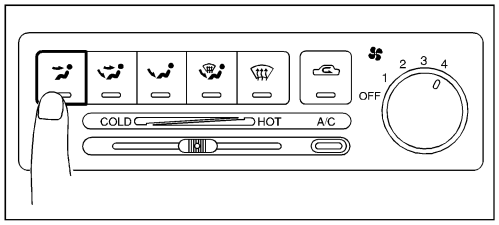

OPERATIONAL CHECK – Discharge air.

1) Push mode switch.

2) Confirm that discharge air comes out according to the air distribution table at left.
Refer to "Discharge Air Flow" in "DESCRIPTION" (*4).

Operation

Mode switch	Bi-level door Position
	Close
	Open
	Close
	Close
	Close

If OK (symptom cannot be duplicated), perform complete operational check (*2).
If NG (symptom is confirmed), continue with STEP-2 following.

2. Check for any service bulletins.

3. Check bi-level door operation. (*1)

NG → Go to Trouble Diagnosis Procedure for bi-level door motor. (*5)

OK → If the symptom still exists, perform a complete operational check (*2) and check for other symptoms.
[Refer to symptom table, (*3).]
Does another symptom exist?

Yes → Go to Trouble Diagnosis for related symptom.
[Another symptom exists.]

No → INSPECTION END

ZHA052H

*1: HA-64
*2: HA-28
*3: HA-27
*4: HA-17
*5: HA-63

DIAGNOSTIC PROCEDURE

=NMHA0277

SYMPTOM:

- **Bi-level door motor does not operate normally.**

1	CHECK POWER SUPPLY FOR A/C CONTROL UNIT	
Refer to "MAIN POWER SUPPLY AND GROUND CIRCUIT CHECK", HA-31.		
OK or NG		
OK	▶	GO TO 2.
NG	▶	Repair or replace.

2	CHECK FOR OUTPUT OF A/C CONTROL UNIT	
Are there approx. 12 volts between bi-level door motor harness connector M29 terminal No.1 (R/B), 2 (R/Y) and body ground.		

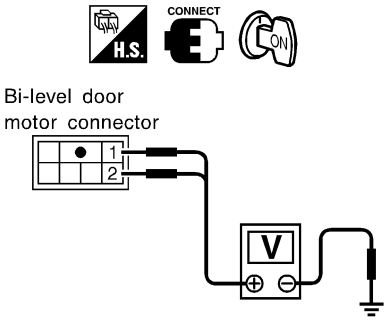

Bi-level door operation	Terminal No. (+)	Terminal No. (–)	Voltage
VENT ⟶ BI-L	2	Body ground	Approx. 12V
BI-L ⟶ VENT	1		

ZHA053H

OK or NG		
OK	▶	Disconnect bi-level door motor connector. GO TO 3.
NG	▶	Replace auto amp.

3	CHECK CIRCUIT CONTINUITY BETWEEN BI-LEVEL DOOR AND A/C CONTROL UNIT	
Check circuit continuity between bi-level door motor harness connector M29 terminal No. 1 (R/B), 2 (R/Y) and A/C control unit harness connector M31 terminal No. 11 (R/Y), 12 (R/B).		

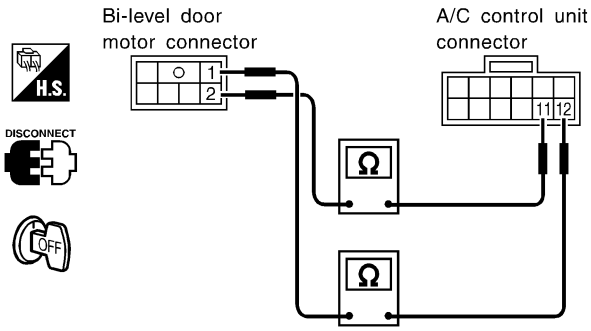

ZHA054H

Continuity should exist.
If OK, check harness for short.

OK or NG		
OK	▶	Replace bi-level door motor.
NG	▶	Replace harness or connector.

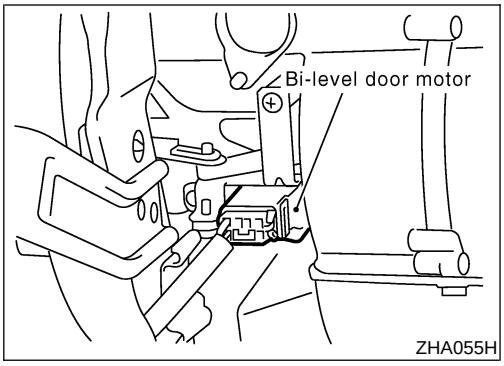

CONTROL LINKAGE ADJUSTMENT

NMHA0278

Bi-Level Door

NMHA0278S01

1. Install bi-level door motor on heater unit and connector it to main harness.
   Make sure lever of bi-level door motor is fitted into the slit of bi-level door link.
2. Turn ignition switch to ON.
3. Turn vent switch ON.
4. Turn BI-LEVEL switch ON. Check that slide link operates at the full open position.
   Also turn BI-LEVEL switch ON to check that slide link operates at the fully-open position.

Magnet Clutch

TROUBLE DIAGNOSIS PROCEDURE FOR MAGNET CLUTCH

=NMHA0119

Symptom:

- **Magnet clutch does not operate when A/C switch and fan switch are ON.**

Inspection Flow

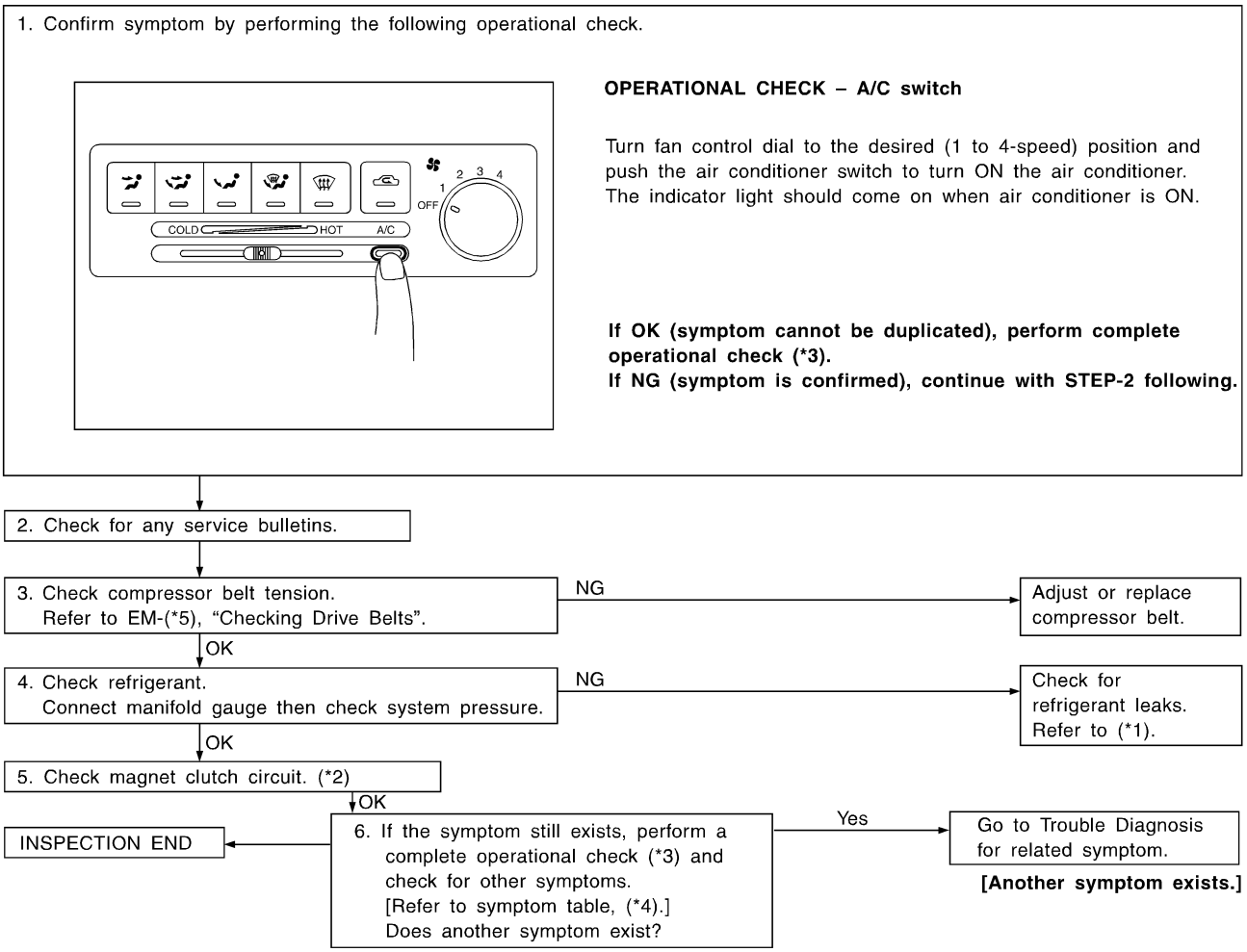

ZHA056H

*1: HA-91
*2: HA-66
*3: HA-28
*4: HA-27
*5: EM-16

DIAGNOSTIC PROCEDURE

=NMHA0091

SYMPTOM:

- **Magnet clutch does not engage when A/C switch and fan switch are ON.**

1	CHECK POWER SUPPLY FOR COMPRESSOR

1. Disconnect compressor harness connector.
2. Are there approx. 12 volts between compressor harness connector F21 terminal No. 1 (L/R) and body ground?

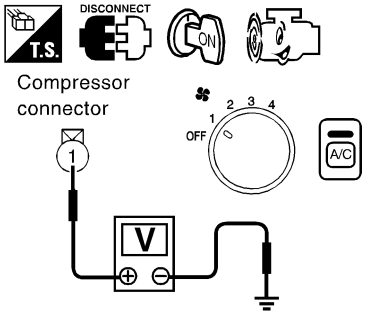

ZHA057H

Yes or No

Yes	▶	GO TO 2.
No	▶	Disconnect A/C relay. GO TO 3.

2	CHECK MAGNET CLUTCH COIL

OK or NG

OK	▶	Refer to STEP 6 in HA-65.
NG	▶	Replace magnet clutch. Refer to HA-82.

3	CHECK CIRCUIT CONTINUITY BETWEEN A/C RELAY AND COMPRESSOR

Check circuit continuity between A/C relay harness connector E5 terminal No. 3 (L/R) and compressor harness connector F21 terminal No. 1 (L/R).

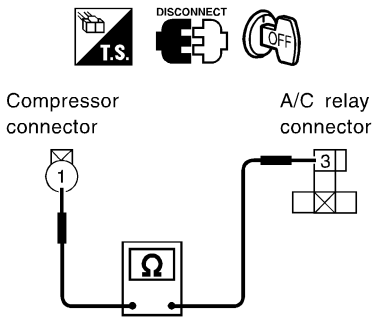

ZHA058H

Continuity should exist.
If OK, check harness for short.

OK or NG

OK	▶	GO TO 4.
NG	▶	Repair harness or connector.

4	CHECK POWER SUPPLY FOR A/C RELAY

Disconnect A/C relay.
Are there approx. 12 volts between A/C relay harness connector E5 terminal No. 2 (L/OR), 5 (G/B) and body ground?

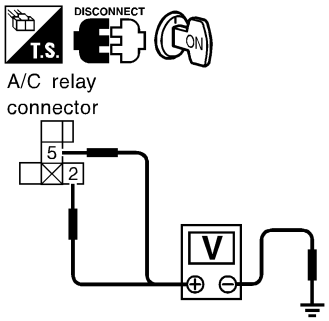

ZHA059H

Yes or No

Yes	▶	GO TO 5.
No	▶	Check power supply circuit and 10A (No. 19, 66) fuse at fuse block. Refer to EL-8, "Wiring Diagram — POWER —".

5	CHECK A/C RELAY AFTER DISCONNECTING IT	
Refer to HA-75.		
	OK or NG	
OK	▶	Reconnect A/C relay. GO TO 6.
NG	▶	Replace A/C relay.

6	CHECK COIL SIDE CIRCUIT OF A/C RELAY	
Are there approx. 12 volts between ECM harness connector F1 terminal No. 11 (G) and body ground?		
	Yes or No	
Yes	▶	GO TO 8.
No	▶	Disconnect A/C relay. Disconnect ECM harness connector. GO TO 7.

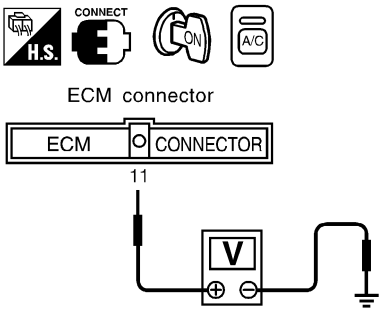

ZHA060H

7	CHECK CIRCUIT CONTINUITY BETWEEN A/C RELAY AND ECM

Check circuit continuity between A/C relay harness connector E5 terminal No. 1 (G) and ECM harness connector F1 terminal No. 11 (G).

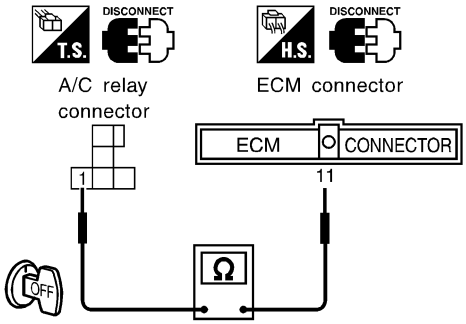

ZHA061H

Continuity should exist.

OK or NG

OK	▶	Check harness for short.
NG	▶	Repair harness or connector.

8	CHECK VOLTAGE FOR ECM

Are there approx. 12 volts between ECM harness connector F1 terminal No. 41 (L/B) and body ground?

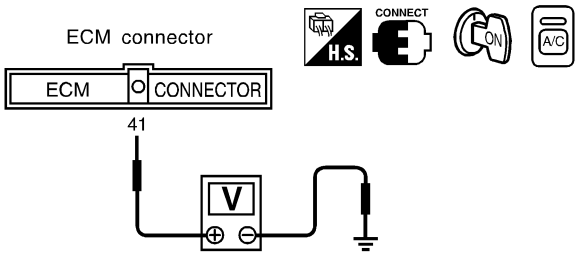

ZHA062H

Yes or No

Yes	▶	GO TO 9.
No	▶	Check ECM. Refer to EC-76, "Description". Repair harness or connector.

9	CHECK POWER SUPPLY FOR THERMO CONTROL AMP.

Are there approx. 12 volts between thermo control amp. harness connector M49 terminal No. 1 (L/OR) and body ground?

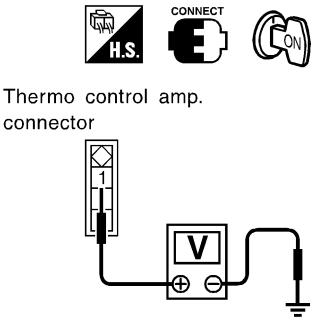

Battery voltage should exist

ZHA063H

Yes or No

Yes	▶	GO TO 10.
No	▶	Check power supply circuit and 10A (No. 15) fuse at fuse block. Refer to EL-11, "Ignition Power Supply — Ignition SW. in "ON". ● If OK, check for open circuit in wiring harness. Repair or replace as necessary. ● If NG, replace fuse and check wiring harness for short circuit. Repair or replace as necessary.

10	CHECK POWER SUPPLY FOR THERMO CONTROL AMP.

Are there approx. 12 volts between thermo control amp. harness connector M49 terminal No. 3 (R) and body ground?

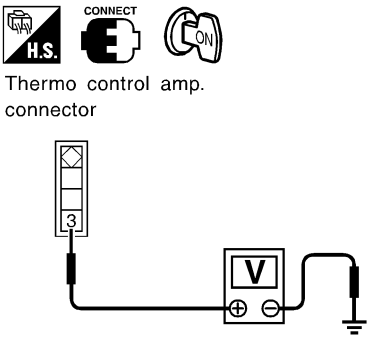

Battery voltage should exist

ZHA064H

Yes or No

Yes	▶	GO TO 11.
No	▶	Repair or replace thermo control amp.

11	CHECK THERMO CONTROL AMP. OPERATION

Does magnet clutch engage when there is a short-circuit between thermo control amp. harness connector M49 terminal No. 2 and body ground?

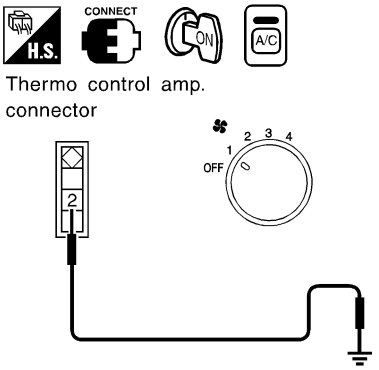

Continuity should exist.

ZHA065H

Yes or No

Yes	▶	GO TO 12.
No	▶	GO TO 13.

12	CHECK THERMO CONTROL AMP.	
Refer to "Thermo Control Amp.", HA-74.		
	OK or NG	
OK	▶	GO TO 13.
NG	▶	Replace thermo control amp.

13	CHECK CIRCUIT CONTINUITY BETWEEN THERMO CONTROL AMP. AND A/C SWITCH	
Disconnect A/C switch harness connector. Check circuit continuity between thermo control amp. harness connector M49 terminal No. 2 (LG/B) and A/C switch harness connector M34 terminal No. 3 (LG/B).		
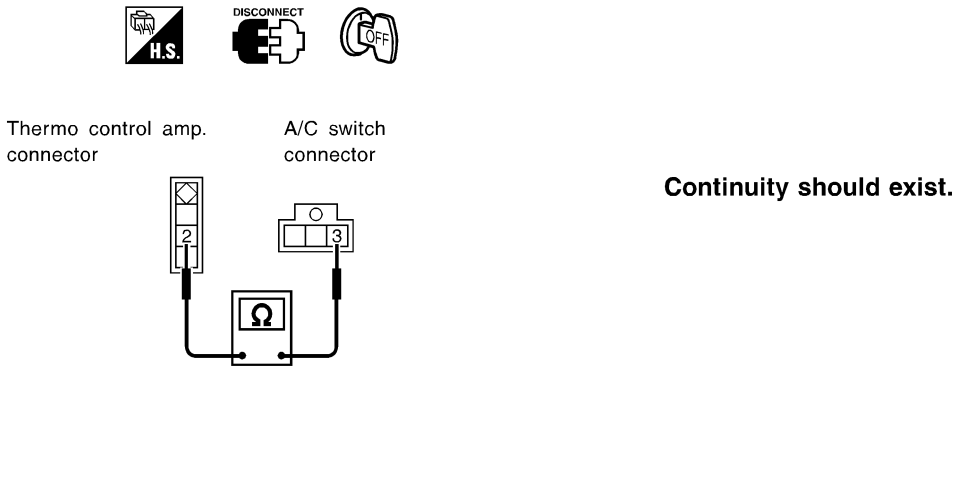		
If OK, check harness for short.		
	OK or NG	
OK	▶	GO TO 14.
NG	▶	Repair harness or connector.

14	CHECK CIRCUIT CONTINUITY BETWEEN FAN SWITCH AND A/C SWITCH

Check circuit continuity between fan switch harness connector M33 terminal No. 5 (LG/R) and A/C switch harness connector M34 terminal No. 4 (LG/R).

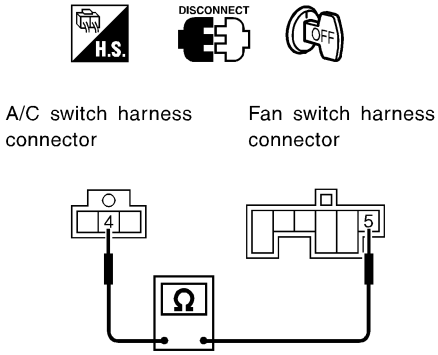

Continuity should exist.

ZHA067H

If OK, check harness for short.

OK or NG

OK	▶	GO TO 15.
NG	▶	Repair harness or connector.

15	CHECK BODY GROUND CIRCUIT FOR FAN SWITCH

Does continuity exist between fan switch harness terminal No. 6 (R/B) and body ground?

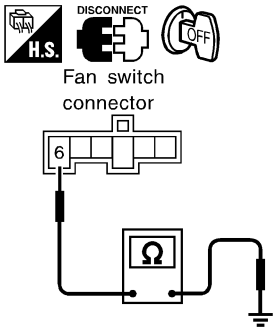

ZHA068H

Yes or No

Yes	▶	GO TO 16.
No	▶	Repair harness or connector.

16	CHECK FAN SWITCH	
Refer to HA-37.		
	OK or NG	
OK	▶	Replace A/C control unit.
NG	▶	Replace fan switch.

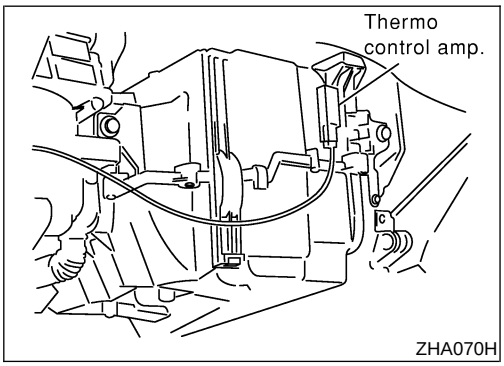

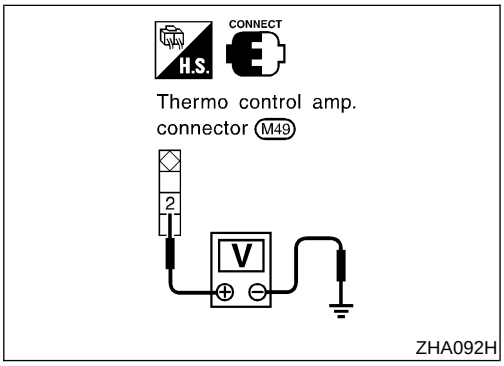

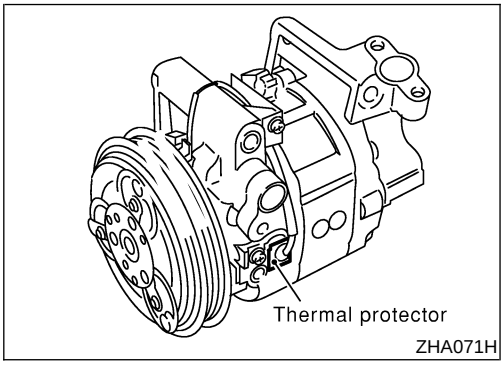

ELECTRICAL COMPONENTS INSPECTION

NMHA0279

Thermo Control Amp.

NMHA0279S01

1. Run engine, and operate A/C system.
2. Connect the voltmeter from harness side.
3. Check thermo control amp. operation shown in the table.

Evaporator outlet air temperature °C (°F)	Thermo amp. operation	Tester
Decreasing to 2.5 - 3.5 (37 - 38)	Turn OFF	Approx. 12V
Increasing to 4.0 - 5.0 (39 - 41)	Turn ON	Approx. 0V

Thermal Protector

NMHA0279S02

Temperature of compressor °C (°F)	Operation
Increasing to approx. 140 - 150 (284 - 302)	Turn OFF
Decreasing to approx. 125 - 135 (257 - 275)	Turn ON

If NG, replace thermal protector.

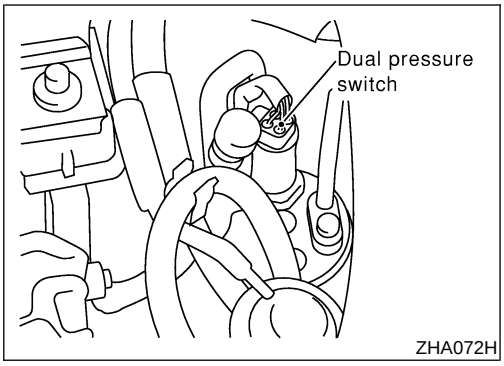

Dual-pressure Switch

=NMHA0279S03

	Terminals	High-pressure side line pressure kPa (kg/cm^2, psi)	Operation	Continuity
Low-pressure side	1 - 2	Increasing to 157 - 216 (1.6 - 2.2, 23 - 31)	ON	Exists.
		Decreasing to 152.0 - 201.0 (1.55 - 2.05, 22.0 - 29.2)	OFF	Does not exist.
High-pressure side	1 - 2	Decreasing to 1,373 - 1,765 (14 - 18, 199 - 256)	ON	Exists
		Increasing to 2,648 - 2,844 (27 - 29, 384 - 412)	OFF	Does not exist.

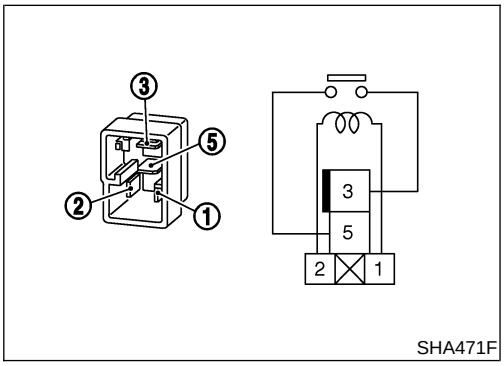

A/C Relay

NMHA0279S04

Check continuity between terminal Nos. 3 and 5.

Conditions	Continuity
12V direct current supply between terminal Nos. 1 and 2	Yes
No current supply	No

If NG, replace relay.

Noise

TROUBLE DIAGNOSIS PROCEDURE FOR NOISE

=NMHA0080

Symptom:

- **Noise**

Inspection Flow

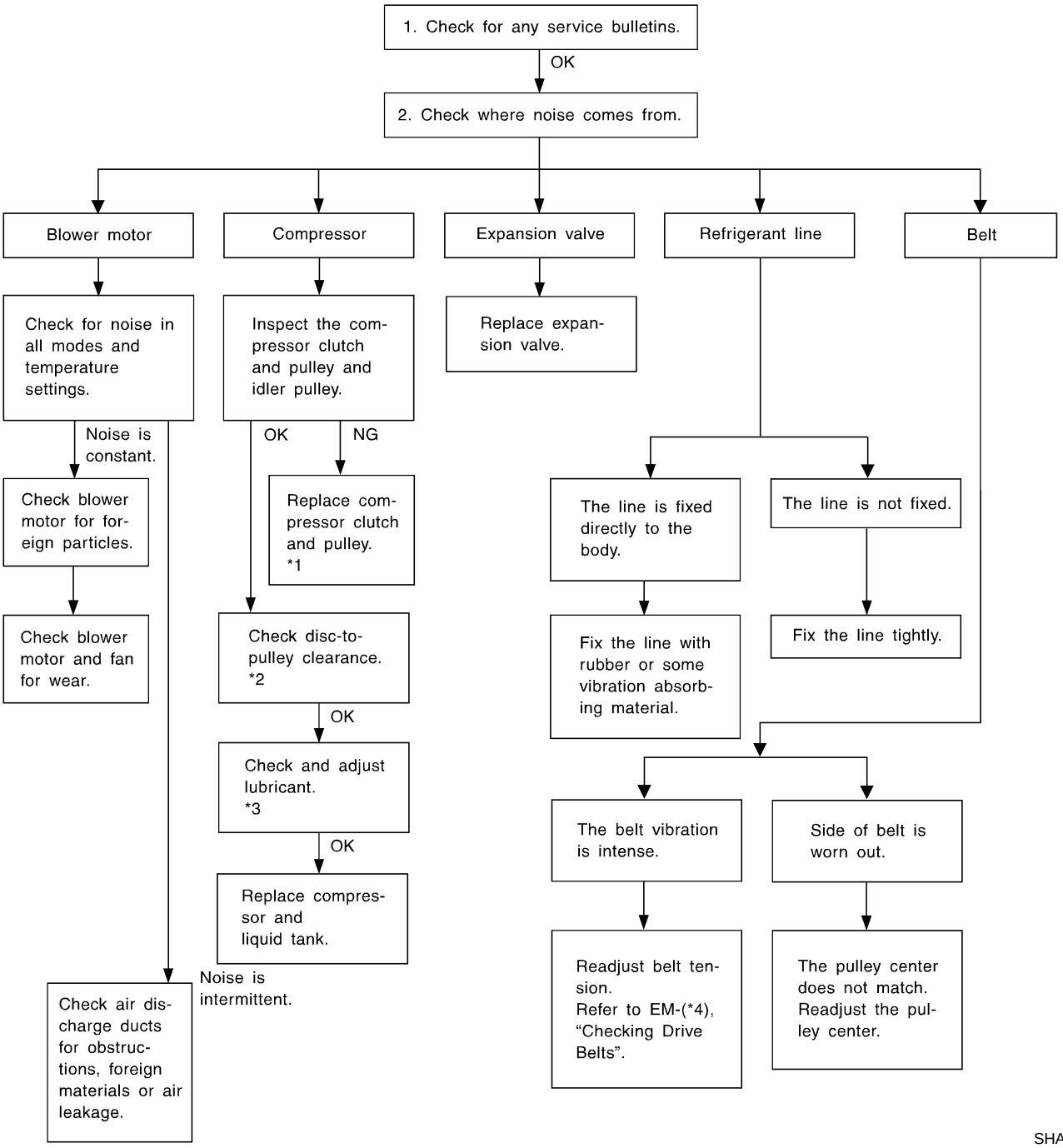

SHA336FA

*1: HA-82
*2: HA-84
*3: HA-79
*4: EM-16

HFC-134a (R-134a) Service Procedure

NMHA0094

SETTING OF SERVICE TOOLS AND EQUIPMENT

NMHA0094S01

Discharging Refrigerant

NMHA0094S0101

WARNING:

Avoid breathing A/C refrigerant and lubricant vapor or mist. Exposure may irritate eyes, nose and throat. Use only approved recovery/recycling equipment to discharge HFC-134a (R-134a) refrigerant. If accidental system discharge occurs, ventilate work area before resuming service. Additional health and safety information may be obtained from refrigerant and lubricant manufacturers.

Example

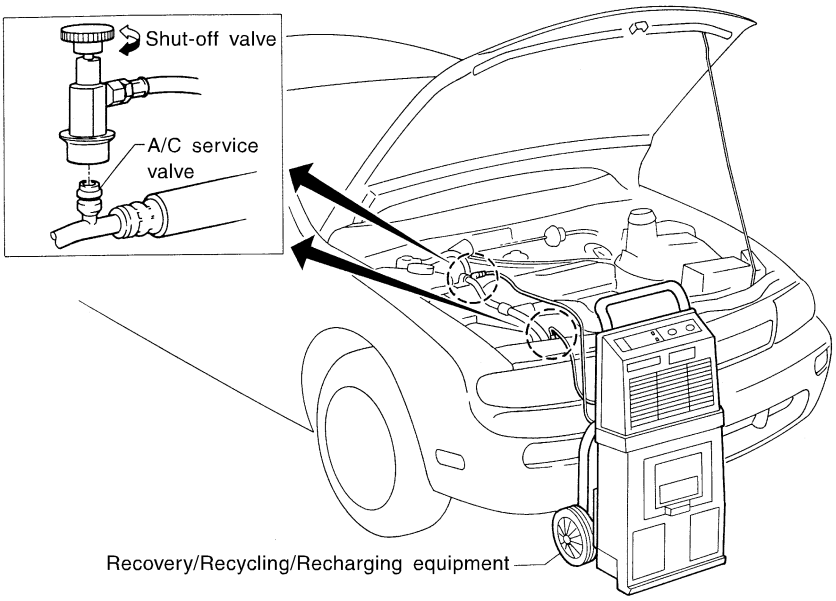

SHA539DE

Evacuating System and Charging Refrigerant

NMHA0094S0102

Example

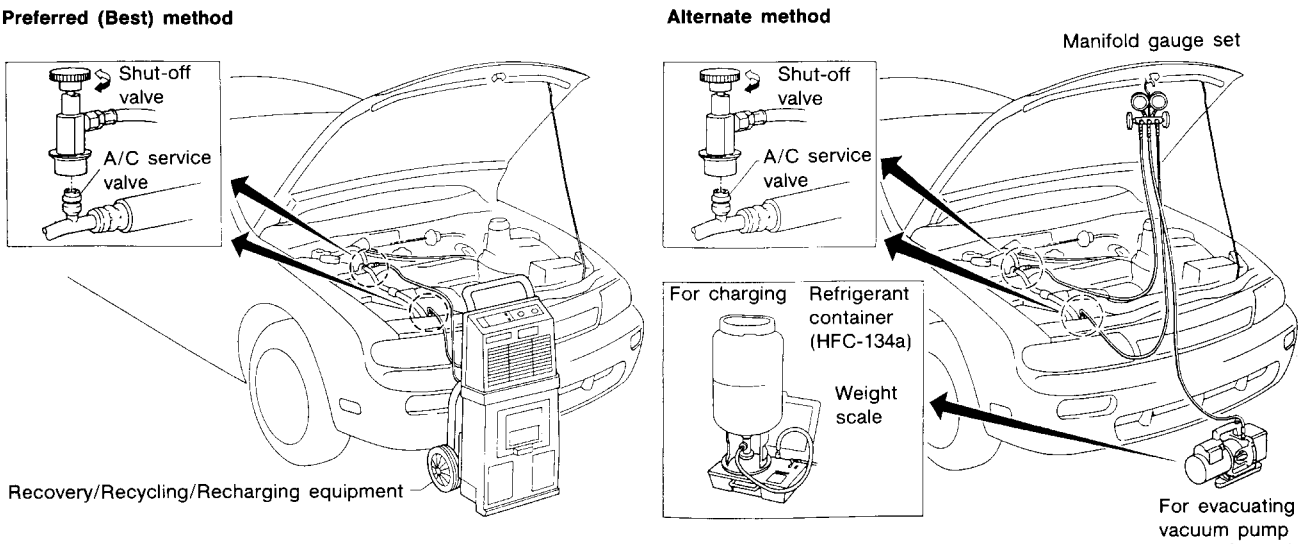

SHA540DC

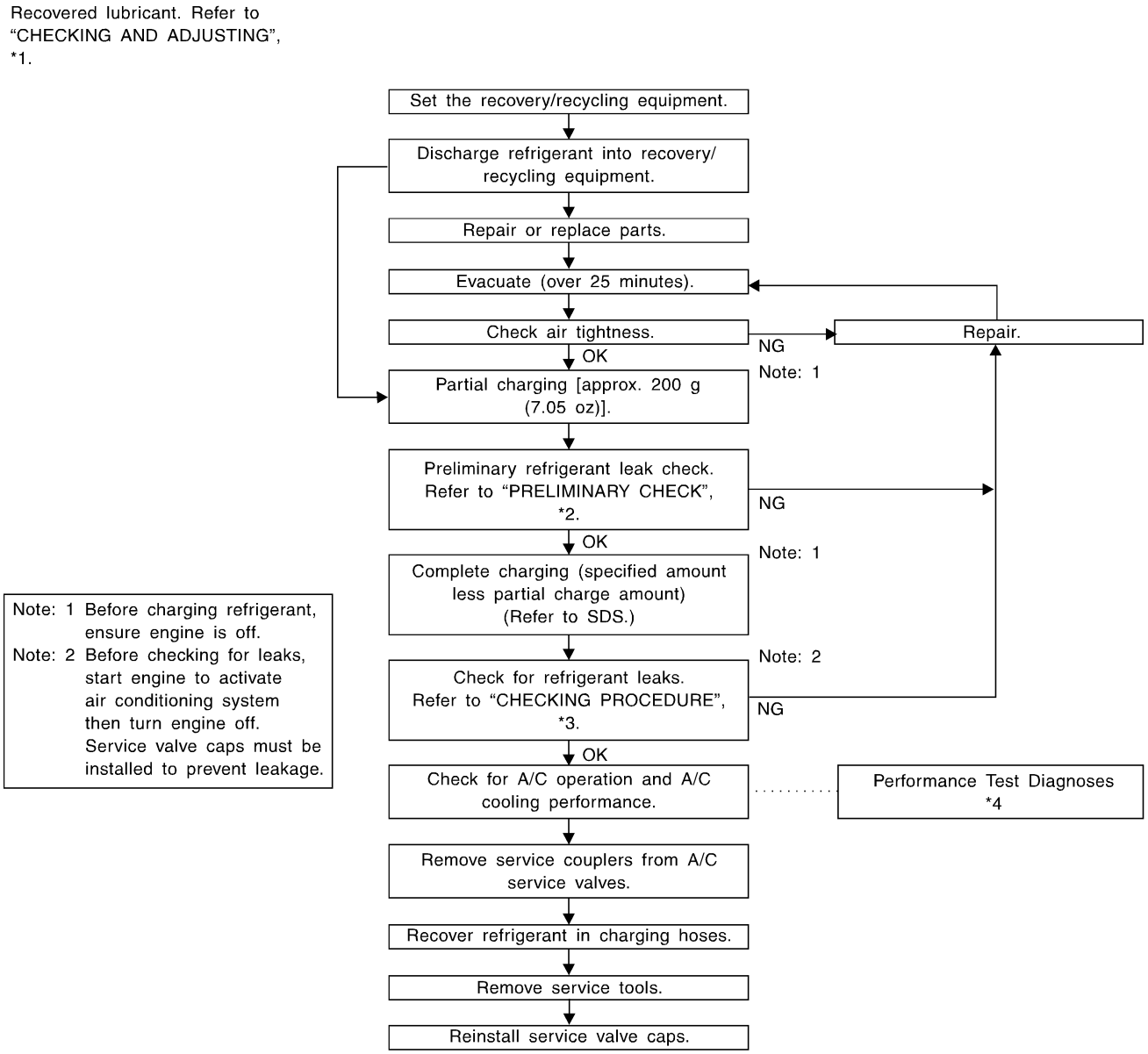

SHA386FA

*1: HA-79
*2: HA-91
*3: HA-92
*4: HA-44

Maintenance of Lubricant Quantity in Compressor

NMHA0095

The lubricant in the compressor circulates through the system with the refrigerant. Add lubricant to compressor when replacing any component or after a large gas leakage. It is important to maintain the specified amount. If lubricant quantity is not maintained properly, the following malfunctions may result:

- Lack of lubricant: May lead to a seized compressor
- Excessive lubricant: Inadequate cooling (thermal exchange interference)

LUBRICANT

NMHA0095S01

Name: Nissan A/C System Oil Type R
Part number: KLH00-PAGR0

CHECKING AND ADJUSTING

NMHA0095S02

Adjust the lubricant quantity according to the test group shown below.

1	LUBRICANT RETURN OPERATION	
Can lubricant return operation be performed? ● A/C system works properly. ● There is no evidence of a large amount of lubricant leakage. **Yes or No**		
Yes	▶	GO TO 2.
No	▶	GO TO 3.

2	PERFORM LUBRICANT RETURN OPERATION, PROCEEDING AS FOLLOWS	
1. Start engine, and set the following conditions: **Test condition** **Engine speed: Idling to 1,200 rpm** **A/C or AUTO switch: ON** **Blower speed: Max. position** **Temp. control: Optional [Set so that intake air temperature is 25 to 30°C (77 to 86°F).]** 2. Perform lubricant return operation for about 10 minutes. 3. Stop engine. **CAUTION:** **If excessive lubricant leakage is noted, do not perform the lubricant return operation.**		
	▶	GO TO 3.

3	CHECK COMPRESSOR	
Should the compressor be replaced? **Yes or No**		
Yes	▶	GO TO HA-80.
No	▶	GO TO 4.

4	CHECK ANY PART	
Is there any part to be replaced? (Evaporator, condenser, liquid tank or in case there is evidence of a large amount of lubricant leakage.) **Yes or No**		
Yes	▶	GO TO HA-80.
No	▶	Carry out the A/C performance test.

Lubricant Adjusting Procedure for Components Replacement Except Compressor

NMHA0095S0201

After replacing any of the following major components, add the correct amount of lubricant to the system.
Amount of lubricant to be added

Part replaced	Lubricant to be added to system	Remarks
	Amount of lubricant mℓ (US fl oz, Imp fl oz)	
Evaporator	75 (2.5, 2.6)	—
Condenser	35 (1.2, 1.2)	—
Liquid tank	10 (0.3, 0.4)	Add if compressor is not replaced. *1
In case of refrigerant leak	30 (1.0, 1.1)	Large leak
	—	Small leak *2

*1: If compressor is replaced, addition of lubricant is included in the table.
*2: If refrigerant leak is small, no addition of lubricant is needed.

Lubricant Adjustment Procedure for Compressor Replacement

NMHA0095S0202

1. Discharge refrigerant into the refrigerant recovery/recycling equipment. Measure lubricant discharged into the recovery/recycling equipment.
2. Drain the lubricant from the "old" (removed) compressor into a graduated container and recover the amount of lubricant drained.
3. Drain the lubricant from the "new" compressor into a separate, clean container.
4. Measure an amount of new lubricant installed equal to amount drained from "old" compressor. Add this lubricant to "new" compressor through the suction port opening.
5. Measure an amount of new lubricant equal to the amount recovered during discharging. Add this lubricant to "new" compressor through the suction port opening.
6. If the liquid tank also needs to be replaced, add an additional 5 mℓ (0.2 Imp fl oz) of lubricant at this time.
   Do not add this 5 mℓ (0.2 Imp fl oz) of lubricant if only replacing the compressor.

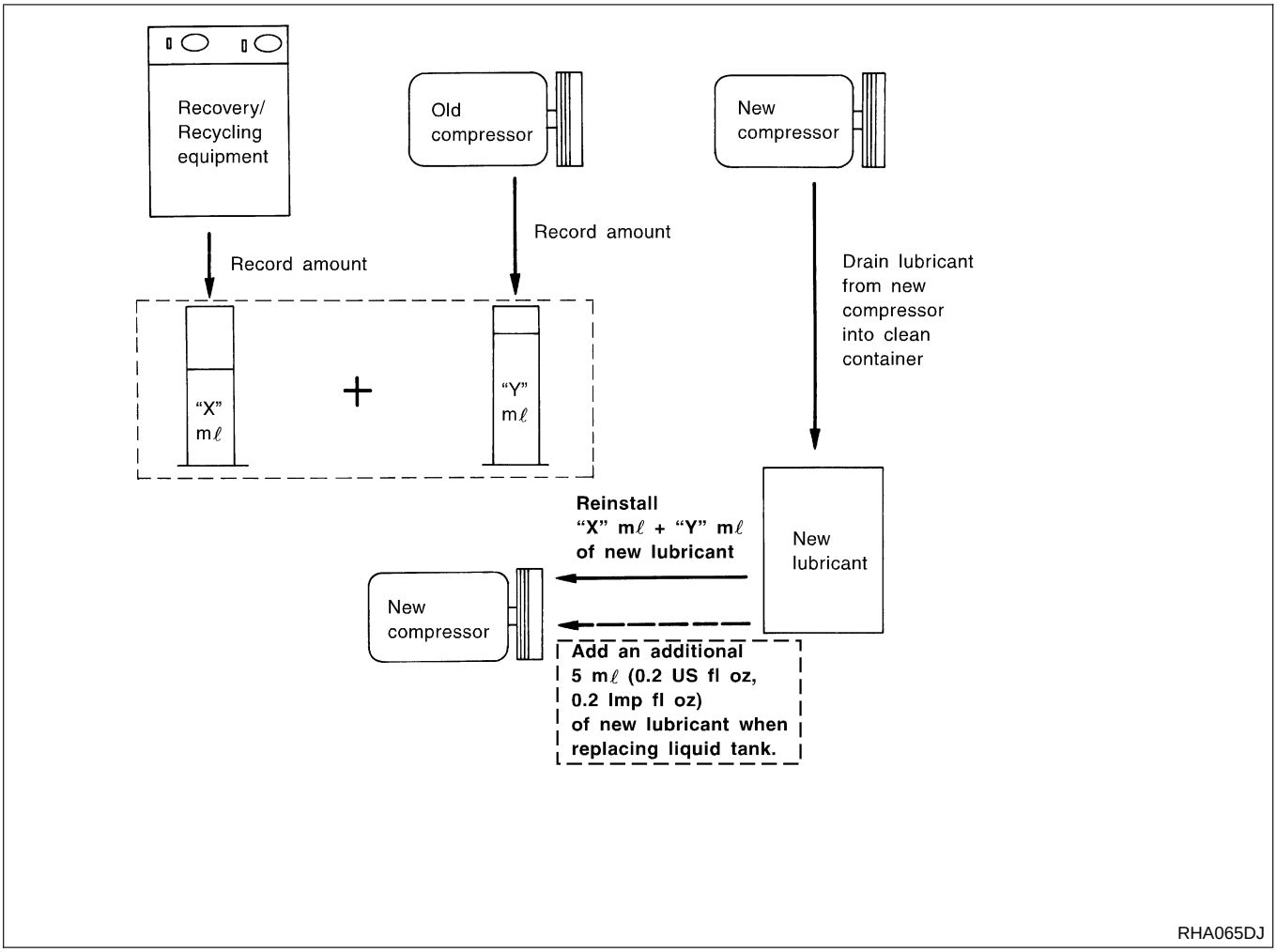

Compressor

REMOVAL AND INSTALLATION

NMHA0287

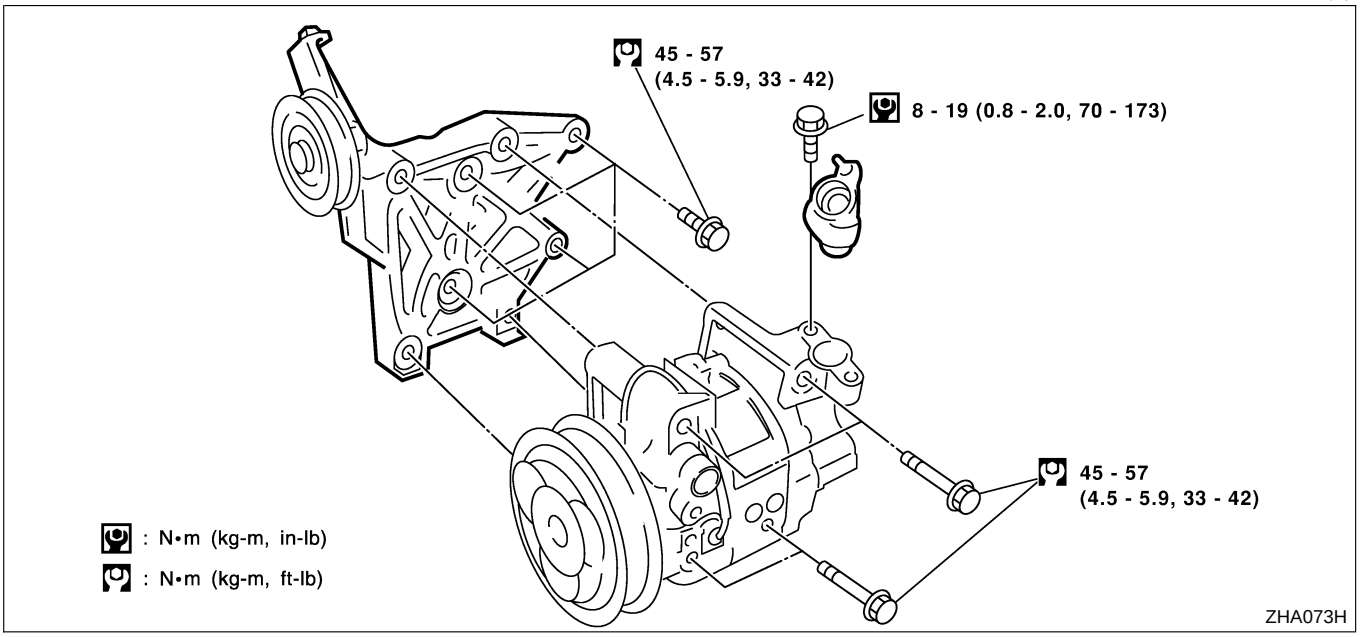

Compressor Clutch — DKV-11G (ZEXEL make)

OVERHAUL

NMHA0280

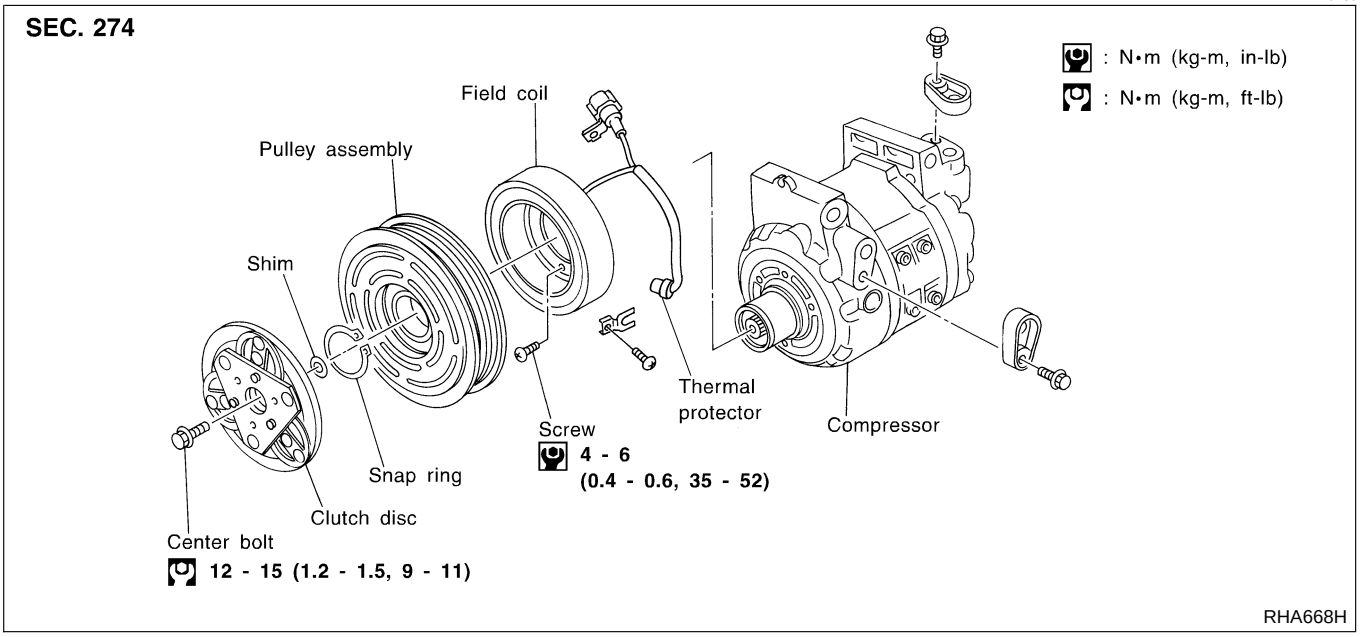

REMOVAL

NMHA0281

- Remove the two screws holding the connector bracket, thermal protector to the compressor.

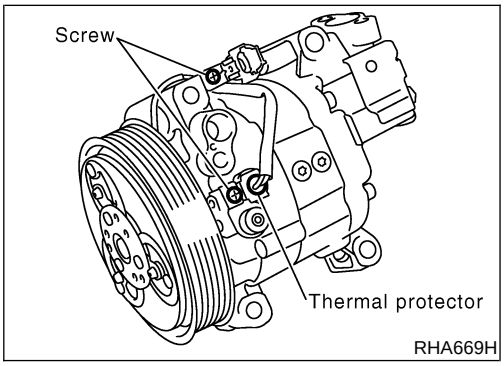

- When removing center bolt, hold clutch disc with clutch disc wrench.

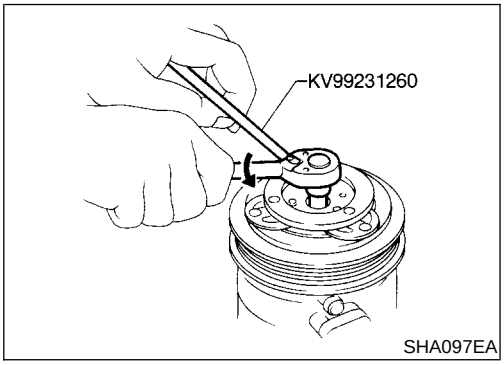

- Remove the drive plate using the clutch disc puller.
  Insert holder's three pins into the drive plate. Rotate the holder clockwise to hook it onto the plate. Tighten the center bolt to remove the drive plate.
  While tightening the center bolt, insert a screwdriver between two of the pins (as shown in the figure) to prevent rotation. After removing the drive plate, remove the shims from either the drive shaft or the drive plate.

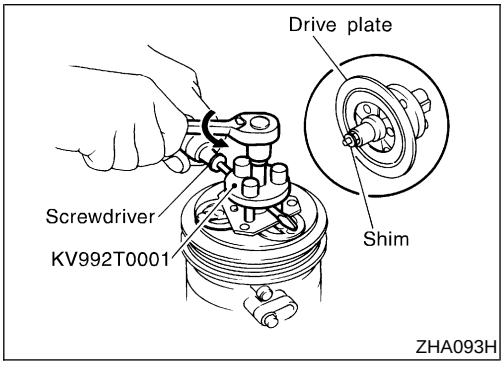

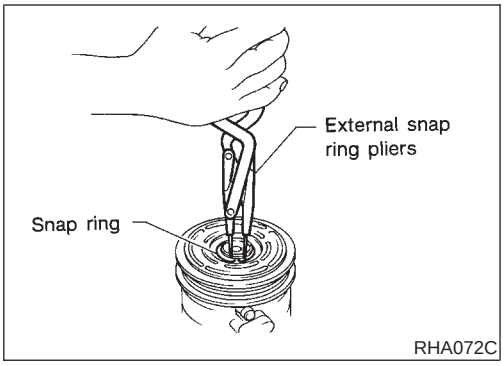

- Remove the snap ring using external snap ring pliers.

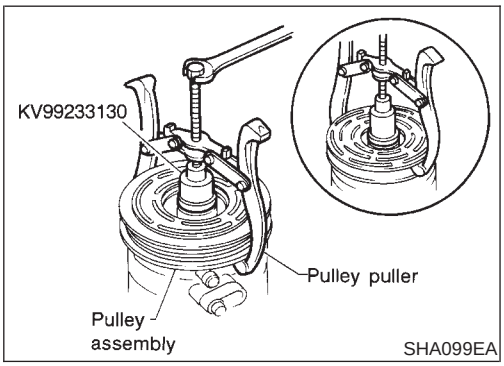

- Pulley removal:
  Use a commercially available pulley puller. Position the center of the puller on the end of the drive shaft. Remove the pulley assembly with the puller.
  For pressed pulleys:
  To prevent deformation of the pulley groove, the puller claws should be hooked under (not into) the pulley groove.
  For machine latched pulleys:
  Align the pulley puller groove with the pulley groove, and then remove the pulley assembly.
- Remove the snap ring using external snap ring pliers.
- Remove the field coil harness clip using a screwdriver. Then remove the three field coil fixing screws and remove the field coil.

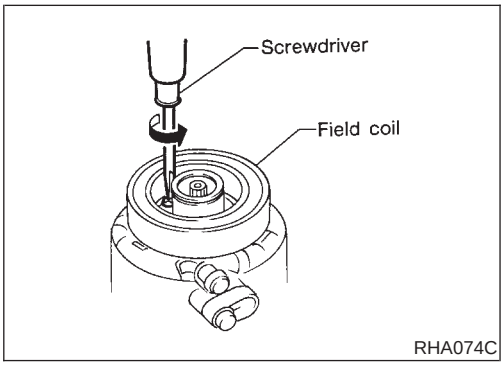

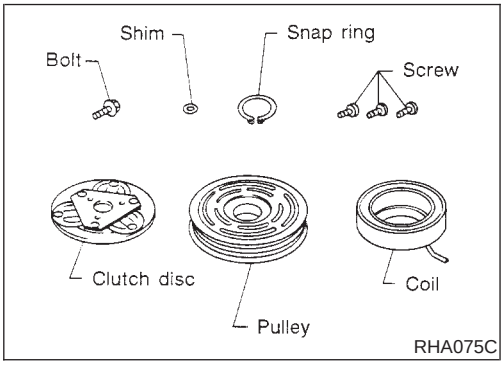

INSPECTION

NMHA0282

Clutch Disc

NMHA0282S01

If the contact surface shows signs of damage due to excessive heat, replace clutch disc and pulley.

Pulley

NMHA0282S02

Check the appearance of the pulley assembly. If contact surface of pulley shows signs of excessive grooving, replace clutch disc and pulley. The contact surfaces of the pulley assembly should be cleaned with a suitable solvent before reinstallation.

Coil

NMHA0282S03

Check coil for loose connection or cracked insulation.

INSTALLATION

NMHA0283

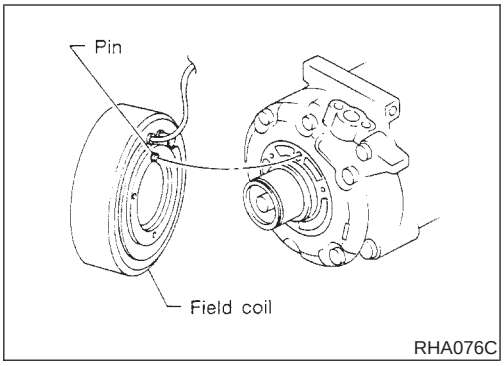

- Install the field coil.
  Be sure to align the coil pin with the hole in the compressor front head.
- Install the field coil harness clip using a screwdriver.

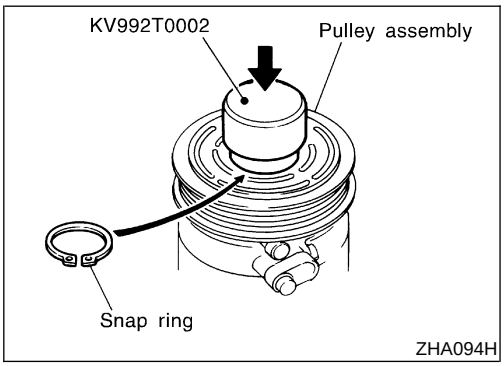

- Install the pulley assembly using the installer and a hand press, and then install the snap ring using snap ring pliers.

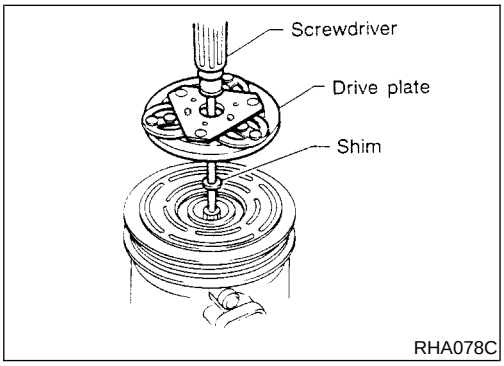

- Install the drive plate on the drive shaft, together with the original shim(s). Press the drive plate down by hand.

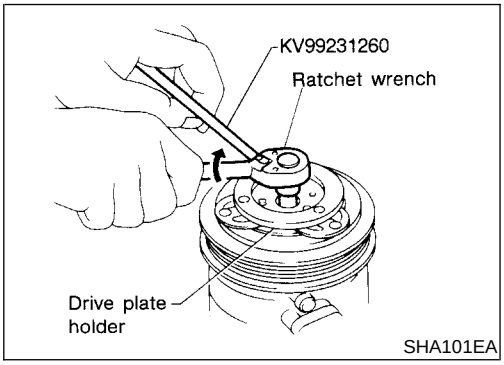

- Using the holder to prevent drive plate rotation, tighten the bolt to 12 to 15 N·m (1.2 to 1.5 kg-m, 9 to 11 ft-lb) torque.
- **After tightening the bolt, check that the pulley rotates smoothly.**

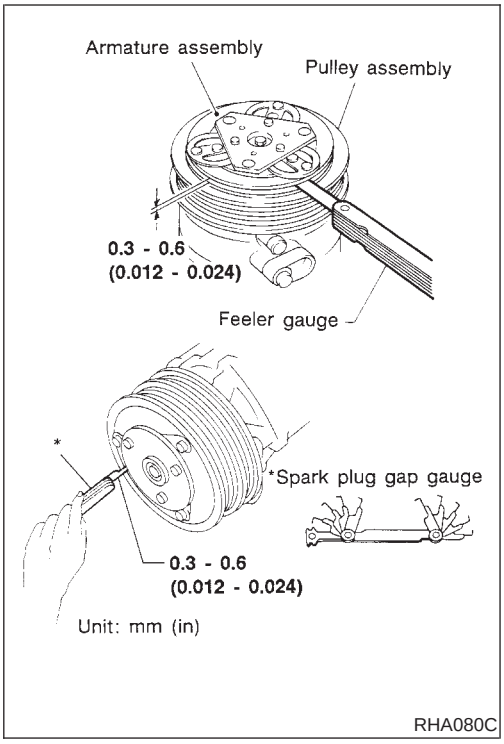

- Check clearance all the way around the clutch disc.

  Disc-to-pulley clearance:

  0.3 - 0.6 mm (0.012 - 0.024 in)

  If the specified clearance is not obtained, replace adjusting spacer and readjust.

Break-in Operation

NMHA0283S01

When replacing compressor clutch assembly, always conduct the break-in operation. This is done by engaging and disengaging the clutch about thirty times. Break-in operation raises the level of transmitted torque.

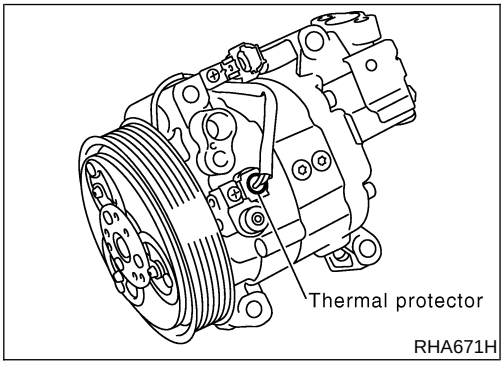

Thermal Protector

INSPECTION

NMHA0284

- When servicing, do not allow foreign matter to enter compressor.
- Check continuity between compressor harness terminal and field coil.

Heater Unit (Heater Core)

REMOVAL

NMHA0261

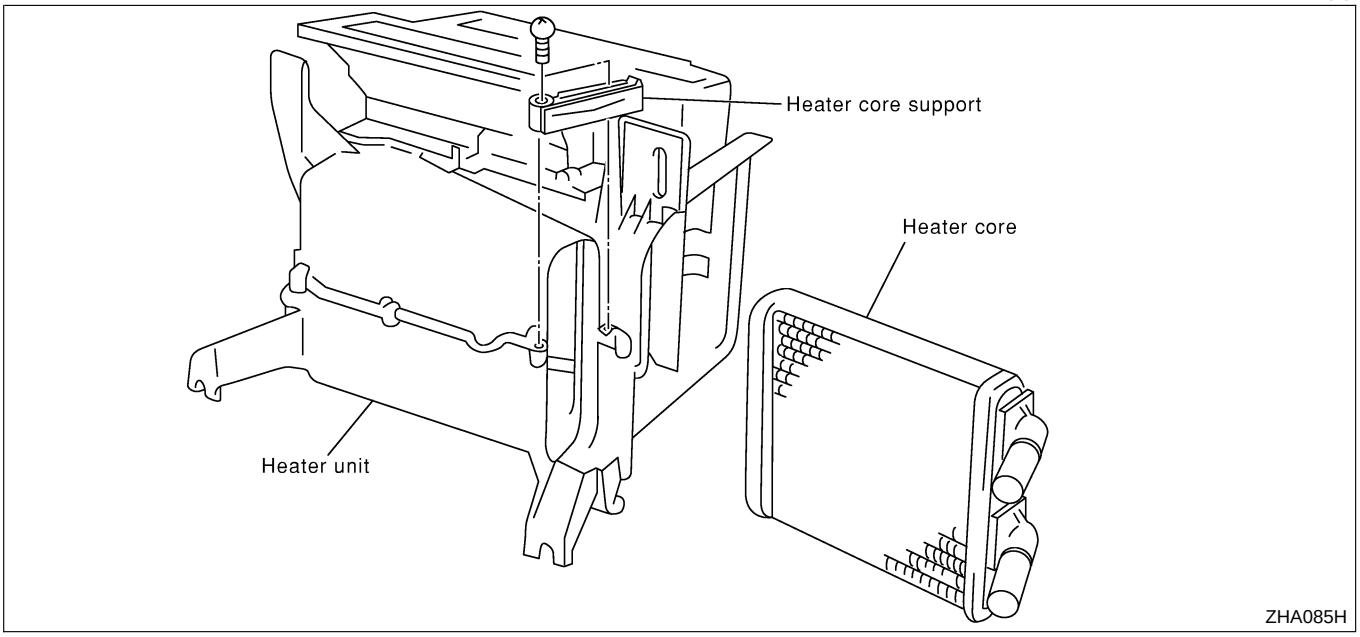

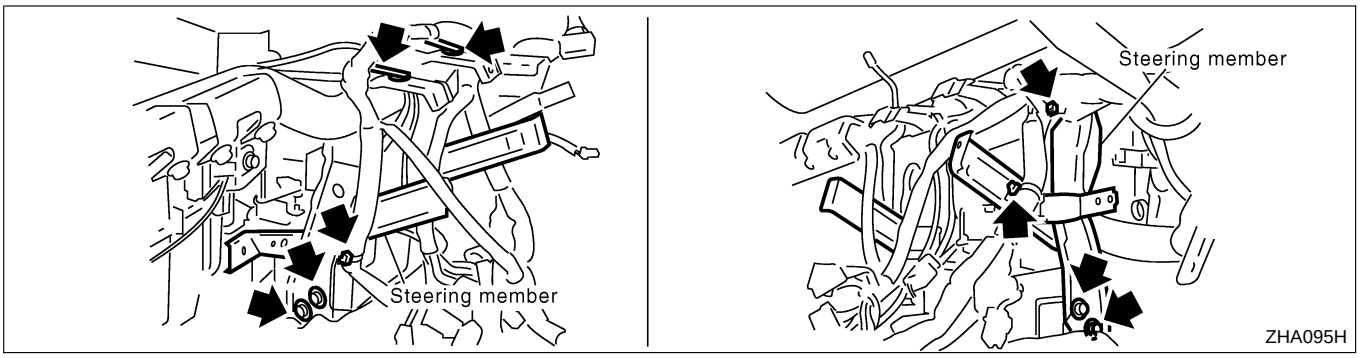

1. Drain the cooling system. Refer to LC-15, “Changing Engine Coolant”.
2. Discharge the A/C system. Refer to HA-77.
3. Disconnect the two heater hoses from inside the engine compartment.
4. Remove the instrument panel assembly. Refer to BT-22, “Removal and Installation”.

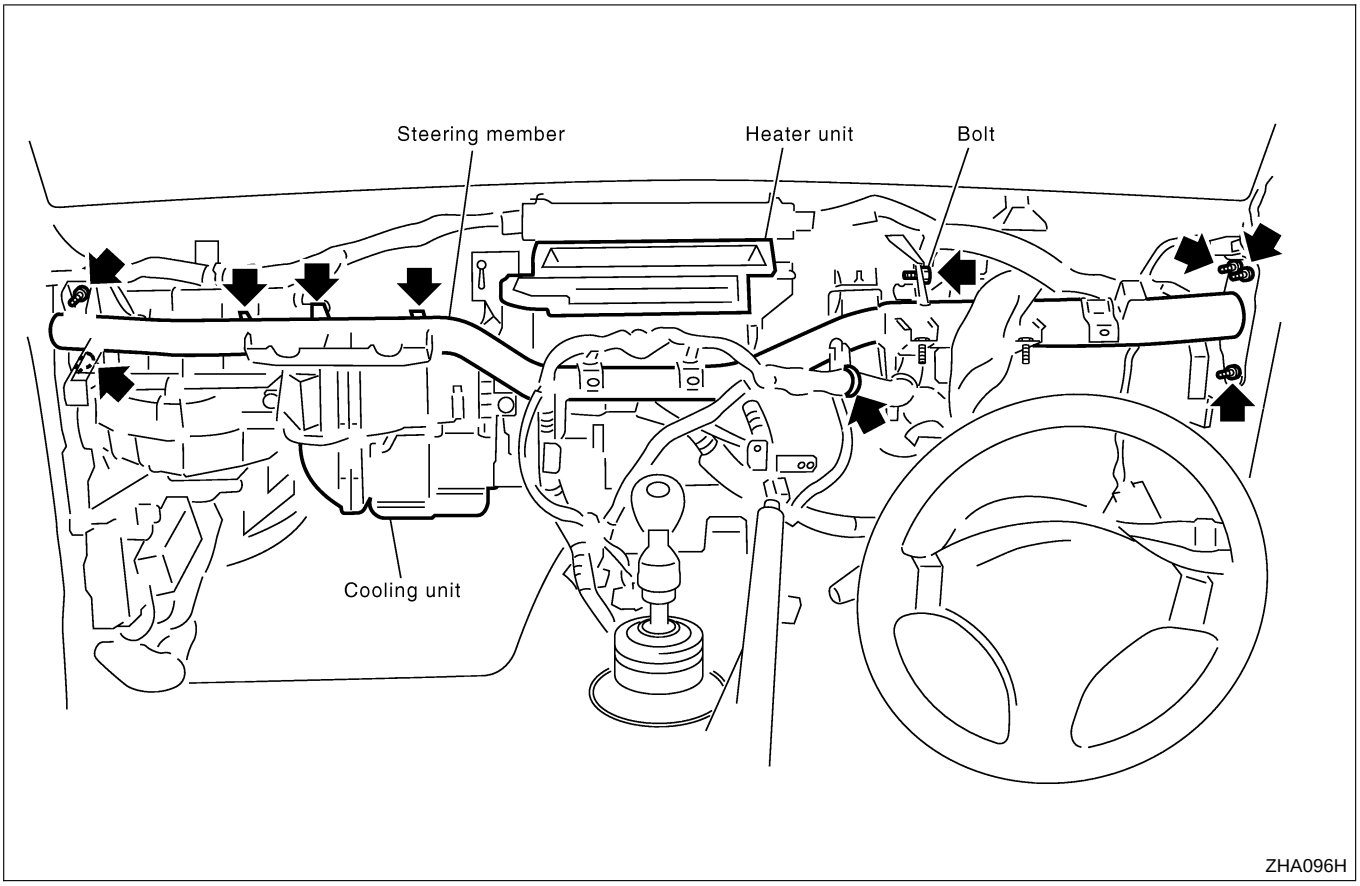

5. Remove the cooling unit. Refer to HA-89.
6. Remove the steering member.

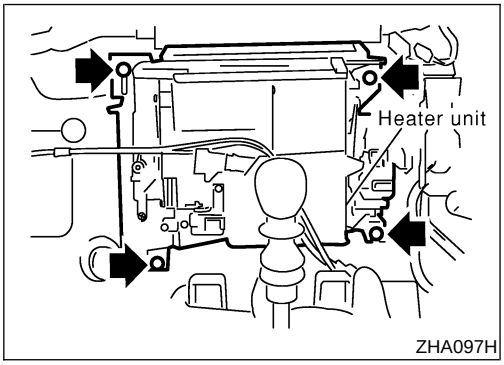

7. Remove the heater unit.
8. Remove the heater core.

INSTALLATION

NMHA0262

Installation is basically the reverse order of removal.

When filling radiator with coolant, refer to LC-15, "Changing Engine Coolant".

Recharge the A/C system. Refer to HA-77.

Blower Unit

REMOVAL

NMHA0288

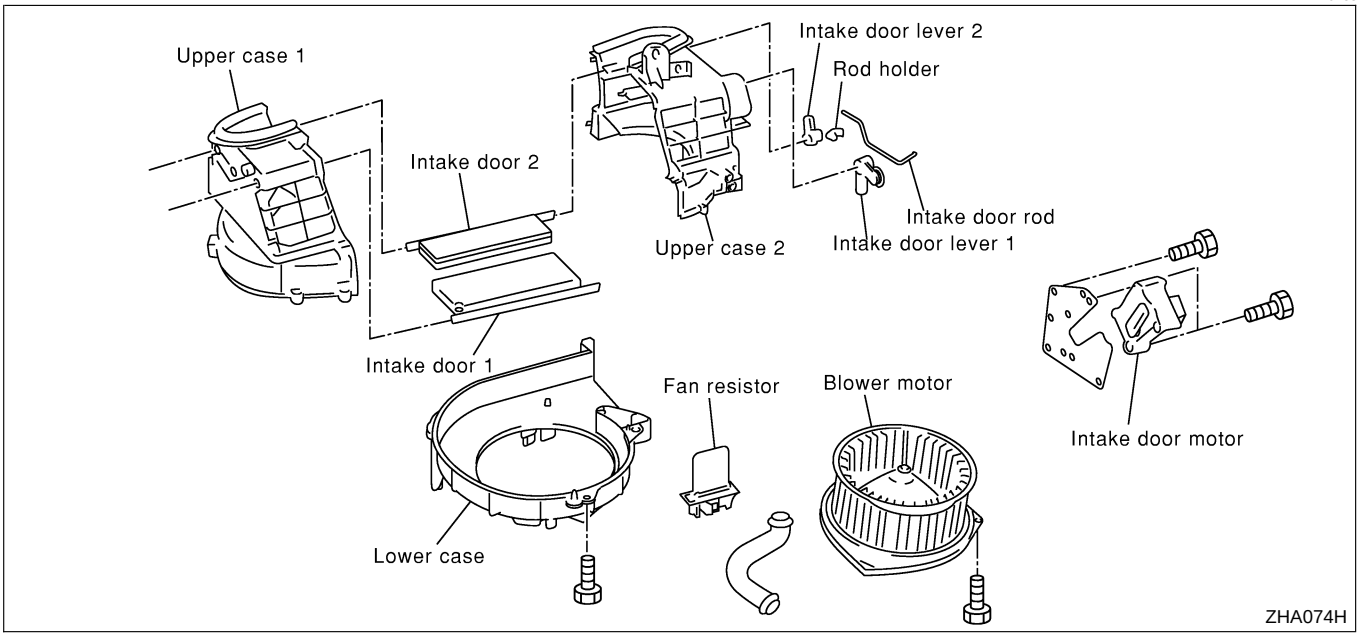

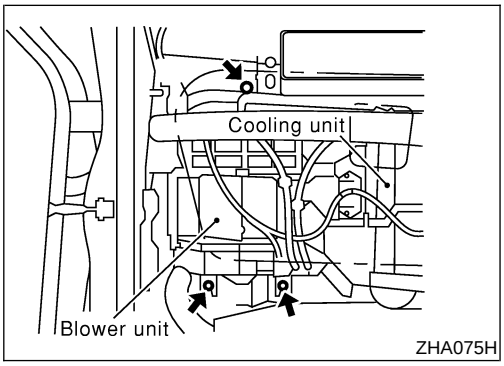

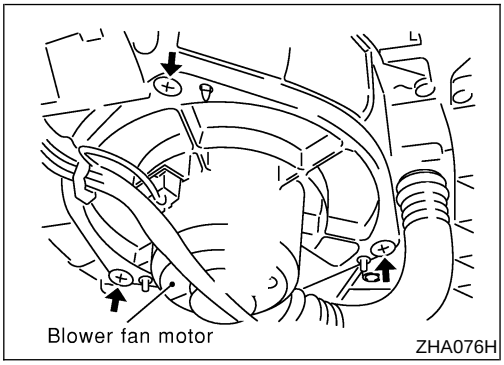

1. Discharge the A/C system. Refer to “Discharging Refrigerant”, HA-77.
2. Disconnect the two refrigerant lines from the engine compartment.
   Cap the A/C lines to prevent moisture from entering the system.
3. Remove cooling unit. Refer to “REMOVAL”, HA-89.
4. Move ECM unit to a position where it cannot be damaged during blower unit removal and installation.
5. Disconnect the resistor and blower motor connector.
6. Remove blower unit.
7. Remove the three bolts and then remove the motor from the blower case.

INSTALLATION

NMHA0289

Install in the reverse order of removal.

Recharge the A/C system. Refer to “Evacuating System and Charging Refrigerant”, HA-77.

Cooling Unit (A/C Evaporator)

REMOVAL

NMHA0263

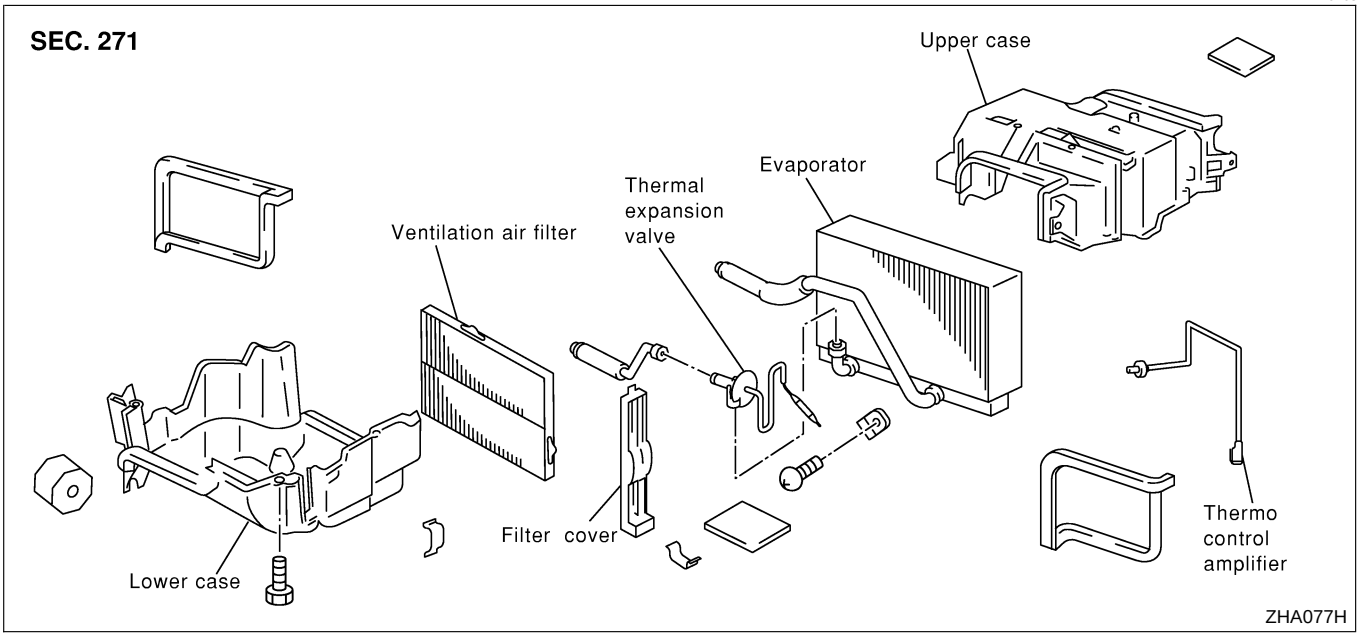

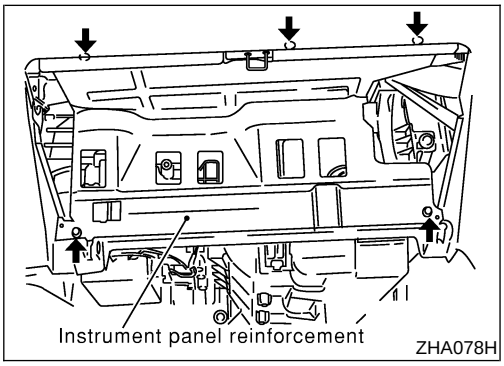

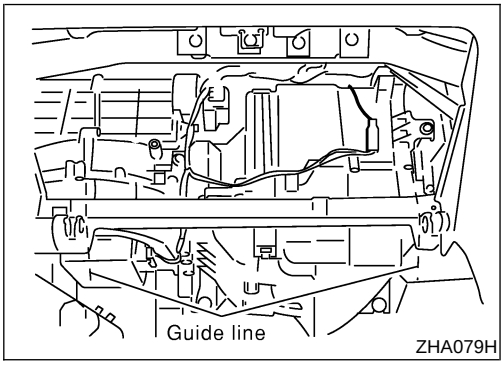

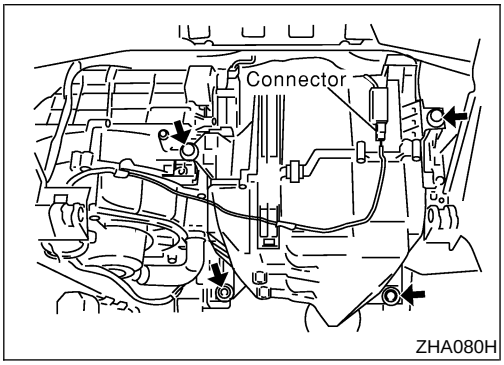

1. Discharge the A/C system. Refer to HA-77.
2. Disconnect the two refrigerant lines from the engine compartment.
   Cap the A/C lines to prevent moisture from entering the system.
3. Remove the glove box and mating trim. Refer to BT-22, “Removal and Installation”.
4. Remove the instrument panel reinforcement.
5. Cut the instrument lower center panel along the guide lines.
6. Disconnect the thermal amp. connector.
7. Remove the cooling unit.
8. Separate the cooling unit case, and remove the evaporator.

INSTALLATION

NMHA0264

Installation is basically the reverse order of removal.
Recharge the A/C system. Refer to HA-77.

Refrigerant Lines

REMOVAL AND INSTALLATION

=NMHA0101

- Refer to page HA-4 regarding “Precautions for Refrigerant Connection”.

SEC. 271

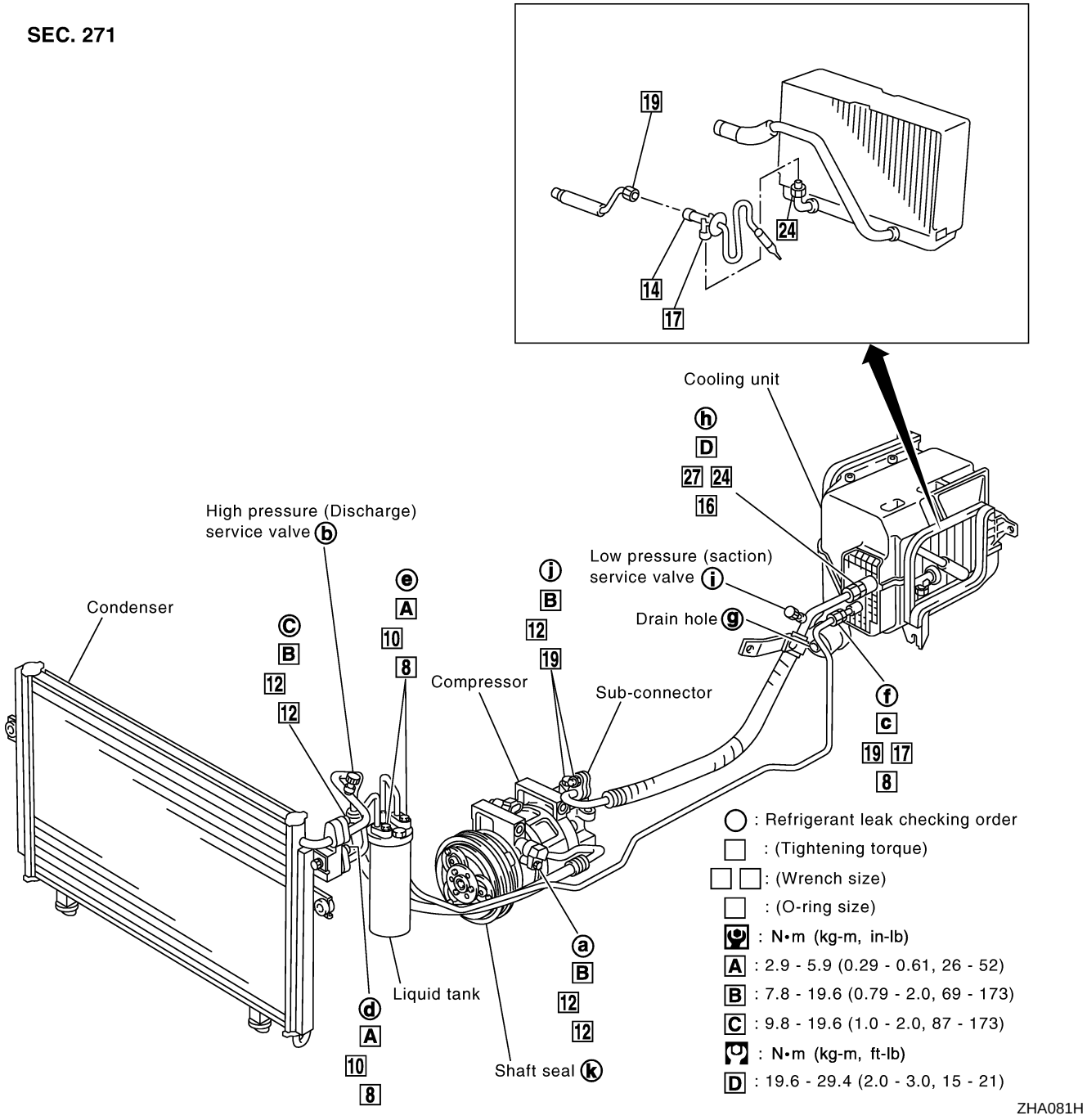

CHECKING FOR REFRIGERANT LEAKS

=NMHA0292

Preliminary Check

NMHA0292S04

- Perform a visual inspection of all refrigeration parts, fittings, hoses and components for signs of A/C lubricant leakage, damage and corrosion. A/C lubricant leakage may indicate an area of refrigerant leakage. Allow extra inspection time in these areas when using either an electronic refrigerant leak detector or fluorescent dye leak detector.
- If dye is observed, confirm the leak with an electronic refrigerant leak detector. It is possible a prior leak was repaired and not properly cleaned.
- When searching for leaks, do not stop when one leak is found but continue to check for additional leaks at all system components and connections.
- When searching for refrigerant leaks using an electronic leak detector, move the probe along the suspected leak area at 25 to 50 mm (1 to 2 in) per second and no further than 1/4 inch from the component.

NOTE:
Moving the electronic leak detector probe slower and closer to the suspected leak area will improve the chances of finding a leak.

ELECTRONIC REFRIGERANT LEAK DETECTOR

NMHA0293

Precautions for Handling Leak Detector

NMHA0293S01

When performing a refrigerant leak check, use an A/C leak detector or equivalent. Ensure that the instrument is calibrated and set properly per the operating instructions.
The leak detector is a delicate device. In order to use the leak detector properly, read the operating instructions and perform any specified maintenance.

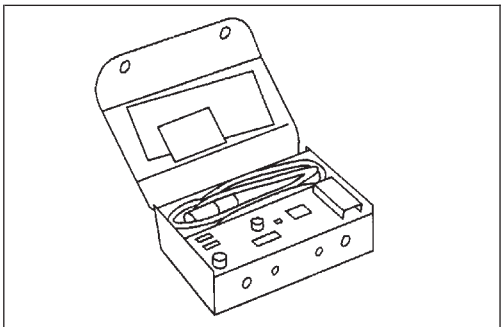
A/C leak detector
SHA705EB

- **Other gases in the work area or substances on the A/C components, for example, anti-freeze, windshield washer fluid, solvents and lubricants, may falsely trigger the leak detector. Make sure the surfaces to be checked are clean. Clean with a dry cloth or blow off with shop air.**
- **Do not allow the sensor tip of the detector to contact with any substance. This can also cause false readings and may damage the detector.**

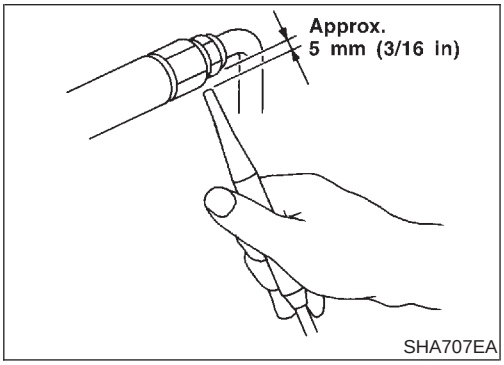

SHA707EA

1. Position probe approximately 5 mm (3/16 in) away from point to be checked.

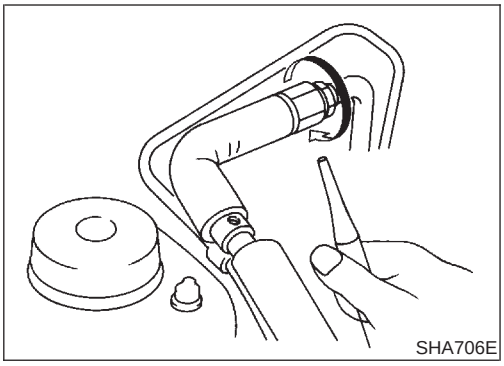
SHA706E

2. When testing, circle each fitting completely with probe.

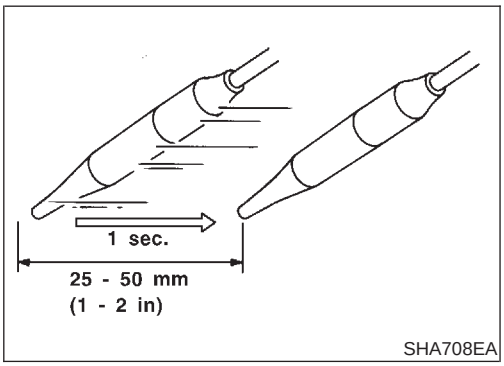

SHA708EA

3. Move probe along component approximately 25 to 50 mm (1 to 2 in)/sec.

Checking Procedure

NMHA0293S02

To prevent inaccurate or false readings, make sure there is no refrigerant vapor, shop chemicals, or cigarette smoke in the vicinity of the vehicle. Perform the leak test in a calm area (low air/wind movement) so that the leaking refrigerant is not dispersed.

1. Turn engine off.
2. Connect a suitable A/C manifold gauge set to the A/C service ports.
3. Check if the A/C refrigerant pressure is at least 345 kPa (3.45 bar, 3.52 kg/cm^2, 50 psi) above 16°C (61°F). If less than specification, recover/evacuate and recharge the system with the specified amount of refrigerant.

NOTE:
At temperatures below 16°C (61°F), leaks may not be detected since the system may not reach 345 kPa (3.45 bar, 3.52 kg/cm^2, 50 psi).

4. Conduct the leak test from the high side (compressor discharge **a** to evaporator inlet **f**) to the low side (evaporator drain hole **g** to shaft seal **k**). Refer to HA-90. Perform a leak check for the following areas carefully. Clean the component to be checked and move the leak detector probe completely around the connection/component.

- **Compressor**
  Check the fittings of high and low pressure hoses and the shaft seal.
- **Liquid tank**
  Check the pressure switch, tube fitting, weld seams and the fusible plug mount.
- **Service valves**
  Check all around the service valves. Ensure service valve caps are secured on the service valves (to prevent leaks).

NOTE:
After removing A/C manifold gauge set from service valves, wipe any residue from valves to prevent any false readings by leak detector.

- **Cooling unit (Evaporator)**
  With engine OFF, turn blower fan to "High" for at least 15 seconds to dissipate any refrigerant trace in the cooling unit. Wait a minimum of 10 minutes accumulation time (refer to the manufacturer's recommended procedure for actual waiting time) before inserting the leak detector probe into the drain hose. Keep the probe inserted for at least ten seconds. Use caution not to contaminate the probe tip with water or dirt that may be in the drain hose.

5. If a leak detector detects a leak, verify at least once by blowing compressed air into area of suspected leak, then repeat check as outlined above.
6. Do not stop when one leak is found. Continue to check for additional leaks at all system components.
   If no leaks are found, perform steps 7 - 10.
7. Start engine.
8. Set the heater A/C control as follows:
1) A/C switch ON.
2) Face mode
3) Recirculation switch ON
4) Max cold temperature
5) Fan speed high
9. Run engine at 1,500 rpm for at least 2 minutes.
10. Turn engine off and perform leak check again following steps 4 through 6 above.

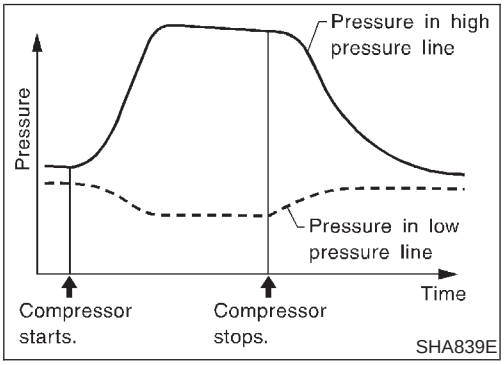

Refrigerant leaks should be checked immediately after stopping the engine. Begin with the leak detector at the compressor. The pressure on the high pressure side will gradually drop after refrigerant circulation stops and pressure on the low pressure side will gradually rise, as shown in the graph. Some leaks are more easily detected when pressure is high.

11. Discharge A/C system using approved refrigerant recovery equipment. Repair the leaking fitting or component as necessary.
12. Evacuate and recharge A/C system and perform the leak test to confirm no refrigerant leaks.
13. Conduct A/C performance test to ensure system works properly.

Fluorescent Dye Leak Detector

NMHA0286

PRECAUTIONS FOR FLUORESCENT DYE LEAK DETECTION

NMHA0286S01

- The fluorescent dye leak detector is not a replacement for an electronic refrigerant leak detector. The fluorescent dye leak detector should be used in conjunction with an electronic refrigerant leak detector to pinpoint refrigerant leaks.
- For your safety and your customer's satisfaction, read and follow all manufacturer's operating instructions and precautions prior to performing the work.
- Refer to "Precautions for Leak Detection Dye", HA-3.

CHECKING SYSTEM FOR LEAKS USING THE FLUORESCENT LEAK DETECTOR

NMHA0286S02

1. Check A/C system for leaks using the UV lamp and safety glasses (J-42220) in a low sunlight area (area without windows preferable). Illuminate all components, fittings and lines. The dye will appear as a bright green/yellow area at the point of leakage. Fluorescent dye observed at the evaporator drain opening indicates an evaporator core assembly (tubes, core or TXV) leak.
2. If the suspected area is difficult to see, use an adjustable mirror or wipe the area with a clean shop rag or cloth, then check the cloth with the UV lamp for dye residue.
3. Confirm any suspected leaks with an approved electronic refrigerant leak detector.
4. After the leak is repaired, remove any residual dye using dye cleaner (J-43872) to prevent future misdiagnosis.
5. Perform a system performance check and verify the leak repair with an approved electronic refrigerant leak detector.

DYE INJECTION

NMHA0286S03

(This procedure is only necessary when re-charging the system or when the compressor has seized and was replaced.)
Refer to "Precautions for Leak Detection Dye", HA-3.

1. Check A/C system static (at rest) pressure. Pressure must be at least 345 kPa (3.52 kg/cm^2, 50 psi).
2. Pour one bottle (1/4 ounce / 7.4 cc) of the A/C refrigerant dye into the injector (J-41459).
3. Connect the injector tool to the A/C LOW PRESSURE side service fitting.
4. Start engine and switch A/C ON.
5. With the A/C operating (compressor running), inject one bottle (1/4 ounce / 7.4 cc) of fluorescent dye through the low-pressure service valve using dye injector (J-41459) (refer to the manufacturer's operating instructions).
6. With the engine still running, disconnect the injector tool from the service fitting.

CAUTION:
Be careful not to allow dye to spray or drip when disconnecting the injector from the system.

NOTE:
If repairing the A/C system or replacing a component, pour the dye directly into the open system connection and proceed with the service procedures.

7. Operate the A/C system for a minimum of 20 minutes to mix

the dye with the system oil. Depending on the leak size, operating conditions and location of the leak, it may take from minutes to days for the dye to penetrate a leak and become visible.

Belt

TENSION ADJUSTMENT

NMHA0103

- **Refer to EM-16, "Checking Drive Belt".**

Idle Air Control Valve (IACV) — Auxiliary Air Control (AAC) Valve

INSPECTION

NMHA0104

- **Refer to EC-209, "System Description" and HA-14.**

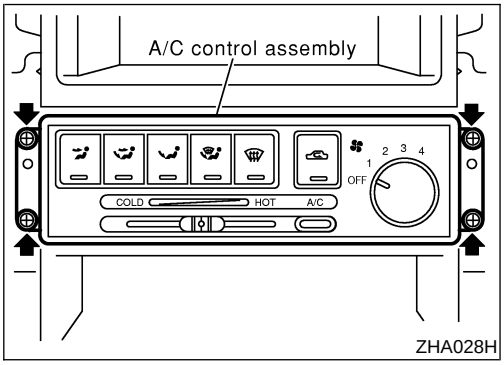

A/C Control System

REMOVAL AND INSTALLATION

NMHA0290

1. Remove cluster lid C.
   - Refer to BT-22, "Removal and Installation".
2. Remove audio (radio).
3. Remove four screws of A/C control unit.
4. Disconnect A/C control unit harness connectors.
5. Remove A/C control unit.
6. Installation is the reverse order of removal.

DISASSEMBLY

NMHA0291

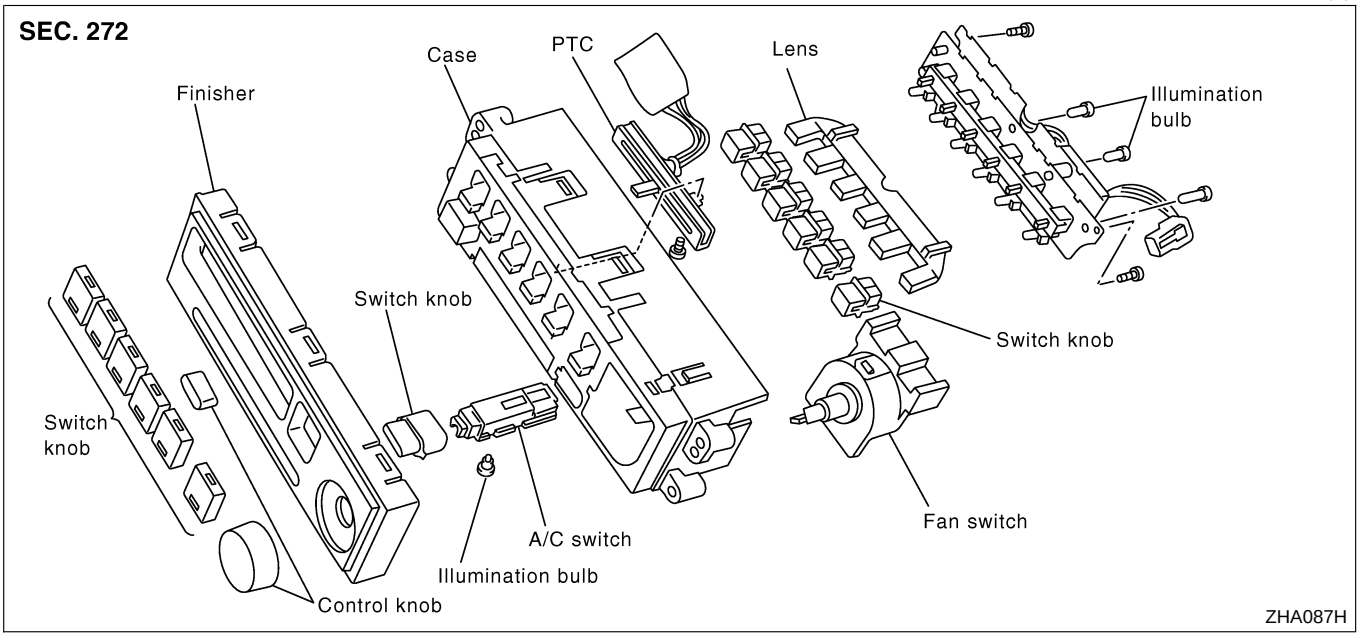

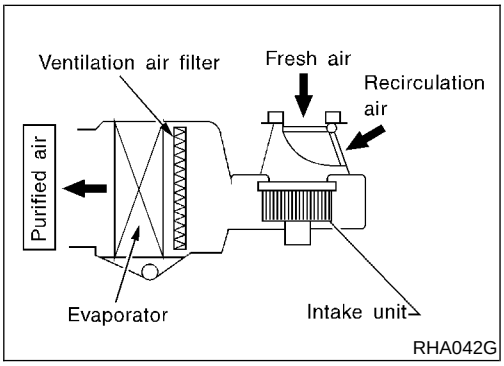

Ventilation Air Filter

FUNCTION

NMHA0268

Air inside passenger compartment is kept clean at either recirculation or fresh mode by installing ventilation air filter into cooling unit.

NOTE:
To replace ventilation air filter, refer to MA-7, "PERIODIC MAINTENANCE".
Caution label is fixed inside the glove box.

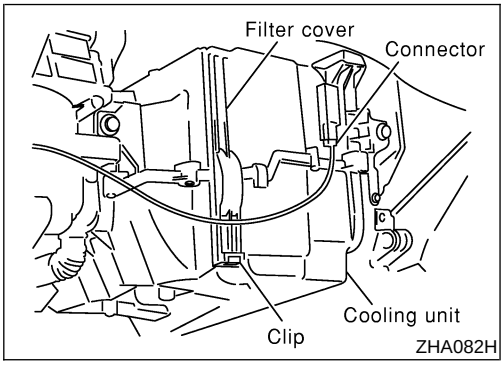

REPLACEMENT PROCEDURE

NMHA0269

1. Remove glove box.
2. Remove the instrument panel reinforcement. Refer to "REMOVAL", HA-89.
3. Remove filter cover fix clip.
4. Disconnect the thermal amp. connector.

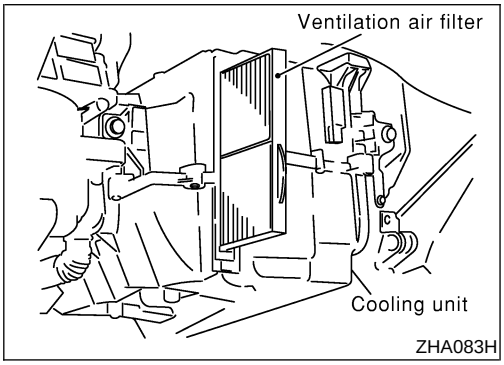

5. Slide the filter cover to the upper side and then remove it.
6. Remove the ventilation air filter from cooling unit.
7. Replace with new one and reinstall on cooling unit.
8. Reinstall filter cover, clip, instrument panel reinforcement and glove box.

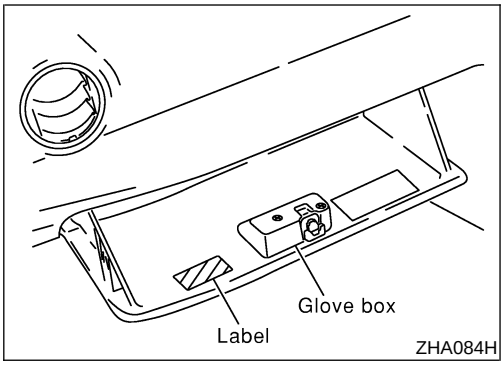

9. Fill in the necessary details on the label and attach it to the glove box in the position shown at left.

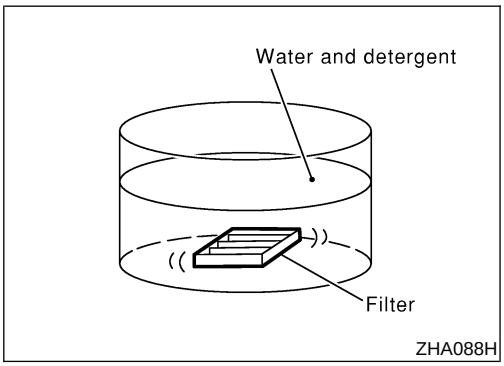

WASHING

NMHA0294

1. Dip the filter into water containing detergent.
2. Move the filter gently to wash it.
3. Dip the filter into clean water to rinse it.
4. Dry the filter using shop air.

CAUTION:

- **A dirty filter is the cause of mould and offensive odors.**
- **The filter can only be washed and reused 1 to 2 times.**
- **If filter performance is not improved, replace the filter with a new one.**

Manual

COMPRESSOR

NMHA0105

Model	ZEXEL make DKV-11G
Type	Vane rotary
Displacement cm^3 (cu in)/rev.	110 (6.71)
Direction of rotation	Clockwise (viewed from drive end)
Drive belt	Poly V

LUBRICANT

NMHA0106

Model		ZEXEL make DKV-11G
Name		Nissan A/C System Oil Type R
Part number*		KLH00-PAGR0
Capacity mℓ (US fl oz, Imp fl oz)	Total in system	180 (6.1, 6.3)
	Compressor (Service part) charging amount	180 (6.1, 6.3)

*: Always check with Parts Department for the latest part information.

REFRIGERANT

NMHA0107

Type	HFC-134a (R-134a)
Capacity kg (lb)	0.45 - 0.55 (0.99 - 1.21)

ENGINE IDLING SPEED (WHEN A/C IS ON)

NMHA0108

- Refer to EC-225, “Idle Speed and Ignition Timing”.

BELT TENSION

NMHA0109

- Refer to EM-16, “Checking Drive Belt”.