# Table of Contents

# ENGINE MANAGEMENT SYSTEMS

**Subject** **Page**


**SIEMENS MS 42.0 ENGINE CONTROL SYSTEM** . . . . . 3

Overview/On Board Diagnostics . . . . . 4
Emission Compliance . . . . . 6
Driving Cycle . . . . . 7
Federal Test Procedure (FTP) . . . . . 8
“Check Engine” (MIL) Light . . . . . 10
Diagnostic Trouble Codes (DTC) . . . . . 12
20 Pin Diagnostic Socket Deletion . . . . . 14
BMW Fault Codes . . . . . 16

Engine Management . . . . . 17
I-P-O . . . . . 18

Scope of Input Functions
BOSCH Oxygen Sensor . . . . . 19
Camshaft Sensor . . . . . 21
Crankshaft Sensor . . . . . 22
Misfire Detection . . . . . 23
Mass Air Flow (HFM) . . . . . 26

Scope of Output Functions
VANOS control . . . . . 27
Electric Fan . . . . . 31
Running Losses . . . . . 32
Secondary Air Injection . . . . . 33
Fuel Injection Valves . . . . . 35
Engine/Vehicle Speed Limitation . . . . . 35
RZV Ignition System . . . . . 36
Resonance/Turbulence Intake System . . . . . 37
Idle Speed Control . . . . . 41
Cruise Control . . . . . 42
Intake Jet Pump . . . . . 43
Purge Valve . . . . . 44
Torque Interfaces . . . . . 45


cardiagn.com

**Subject** **Page**

Leakage Diagnosis Pump (LDP) . . . . . 46
Motor Driven Throttle Valve . . . . . 51
Intake Air Flow Control. . . . . 55

**SIEMENS MS 43.0 ENGINE CONTROL SYSTEM**. . . . . .57

Introduction. . . . . 58

I.P.O. . . . . .59

MS 43.0 New Functions
Electronic Throttle Control (EML). . . . . .60
Accelerator Pedal Sensor (PWG). . . . . 61
Electronic Throttle Valve (EDK). . . . . 63
Main Relay Monitor. . . . . .65
Engine Optimized ignition Key Off. . . . . 66
Diagnosis Module Tank Leakage (DM-TL). . . . . 67
DM-TL Function. . . . . .69
DM-TL Test Procedure. . . . . .70

**Review Questions**. . . . . .74

cardiagn.com

## SIEMENS MS 42.0 ENGINE CONTROL SYSTEM

## Model: E46 equipped with M52TU Engine

## Production Dates: M52TU B28: 6/98 to 6/00, M52TU B25: 6/98 to 9/00

**Objectives**

After completing this module you should be able to:

- Describe the engine management system monitoring required by OBD II regulation.
- Explain what is required in-order for the ECM to illuminate the MIL.
- Understand how the ECM monitors for misfires.
- Explain the relationship between the MDK and idle control valve.
- Describe the operation of the resonance charging manifold.
- List the procedure the ECM uses to carry out the tank leakage test.
- Recognize the fail-safe running characteristics of the MDK safety concept.

cardiagn.com

## OBD II FUNCTION: Overview (On Board Diagnosis)

Since the 1996 model year all vehicles must meet OBD II requirements. OBD II requires the monitoring of virtually every component that can affect the emission performance of a vehicle plus store the associated fault code and condition in memory. If a problem is detected, the OBD II system must also illuminated a warning lamp (Malfunction Indicator Light - MIL/ “Check Engine Light”” located on the vehicle instrument panel to alert the driver that a malfunction has occurred. In order to accomplish this task, BMW utilizes the Engine Control Module (ECM/DME) as well as the Automatic Transmission Control Module (EGS/AGS) and the Electronic Throttle Control Module (EML) to monitor and store faults associated with all components/systems that can influence exhaust and evaporative emissions.

cardiagn.com

# OVERVIEW OF THE NATIONAL LOW EMISSION VEHICLE PROGRAM

## Emission Reduction Stages:

While OBD II has the function of monitoring for emission related faults and alerting the operator of the vehicle, the National Low Emission Vehicle Program requires a certain number of vehicles produced (specific to manufacturing totals) ***currently*** comply with the following emission stages;

**TLEV:** Transitional Low Emission Vehicle

**LEV:** Low Emission Vehicle

**ULEV:** Ultra Low Emission Vehicle.

Prior to the National Low Emission Vehicle Program, the most stringent exhaust reduction compliancy is what is known internally within BMW as HC II. The benefit of exhaust emission reductions that the National Low Emission Vehicle Program provides compared with the HC II standard is as follows:

**TLEV-** 50% cleaner.

**LEV-** 70% cleaner.

**ULEV-** 84% cleaner.

**Cold Engine Startup - 50 ° F**

**Grams/Mile - "New"**

| Compliance Level | NMHC Non Methane Hydrocarbon | CO Carbon Monoxide | NOx Oxide(s) of Nitrogen |
|---|---|---|---|
| TLEV | 0.250 | 3.4 | 0.4 |
| LEV | 0.131 | 3.4 | 0.2 |
| ULEV | 0.040 | 1.7 | 0.2 |

Grams/Mile at 50,000 miles

| Compliance Level | NMHC Non Methane Hydrocarbon | CO Carbon Monoxide | NOx Oxide(s) of Nitrogen |
|---|---|---|---|
| TLEV | 0.125 | 3.4 | 0.4 |
| LEV | 0.075 | 3.4 | 0.2 |
| ULEV | 0.040 | 1.7 | 0.2 |

Grams/Mile at 100,000 miles

| Compliance Level | NMHC Non Methane Hydrocarbon | CO Carbon Monoxide | NOx Oxide(s) of Nitrogen |
|---|---|---|---|
| TLEV | 0.156 | 4.2 | 0.6 |
| LEV | 0.090 | 4.2 | 0.3 |
| ULEV | 0.055 | 2.1 | 0.3 |

carlabs.com

## OBD II EVAPORATIVE EMISSION COMPLIANCE

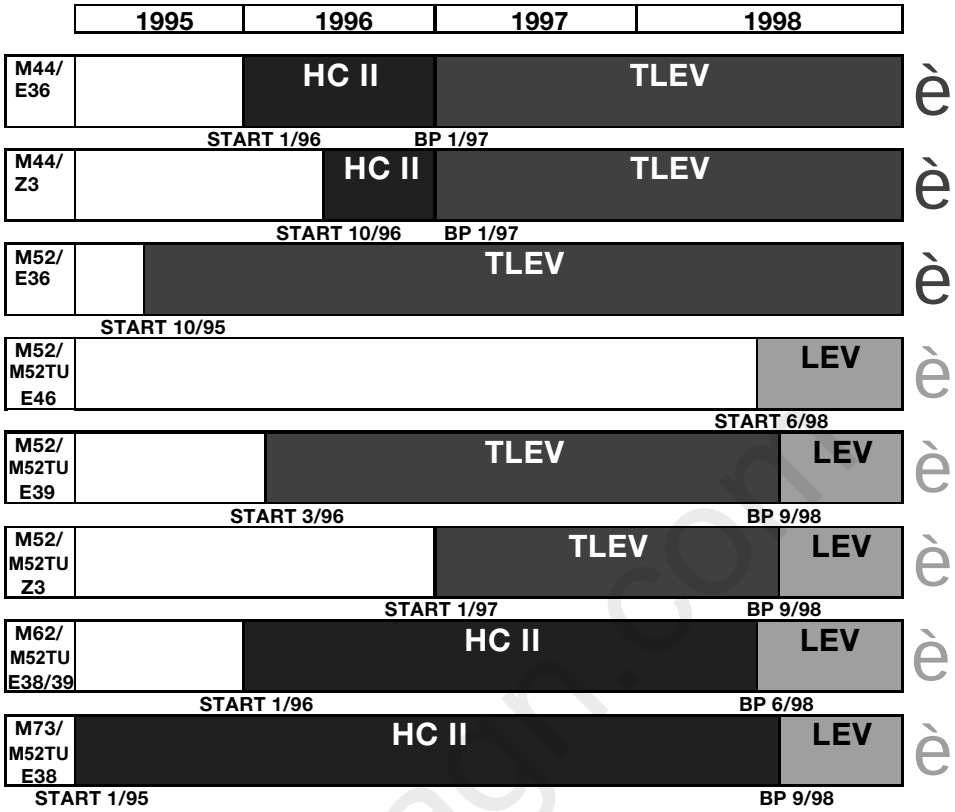


## OBD II EVAPORATIVE EMISSION COMPLIANCE

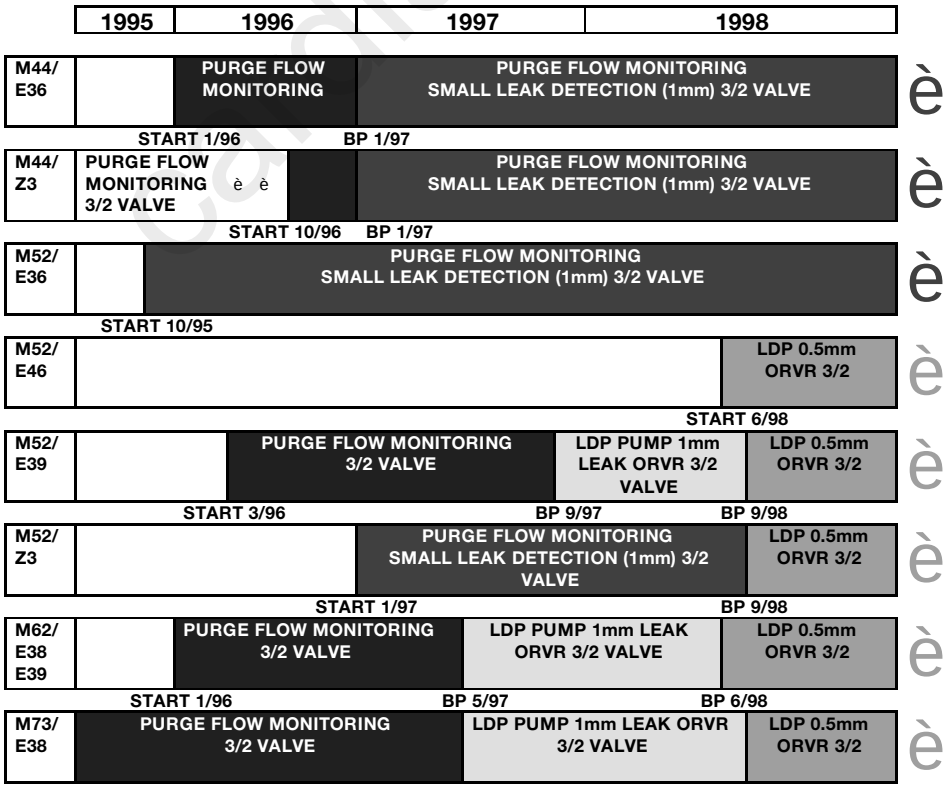

# OBD II FUNCTION:  DRIVING CYCLE

As defined within CARB mail-out 1968.1:

**"Driving cycle"** consists of engine startup and engine shutoff.

**"Trip"** is defined as vehicle operation (following an engine-off period) of duration and driving style so that all components and systems are monitored at least once by the diagnostic system except catalyst efficiency or evaporative system monitoring. This definition is subject to the limitations that the manufacturer-defined trip monitoring conditions are all monitored at least once during the first engine start portion of the Federal Test Procedure (FTP).

Within this text the term **"customer driving cycle"** will be used and is defined as engine start-up, operation of vehicle (dependent upon customer drive style) and engine shut-off.

cardiagn.com

# FEDERAL TEST PROCEDURE (FTP)

The Federal Test Procedure (FTP) is a **specific driving cycle** that is utilized by the EPA to test light duty vehicles and light duty truck emissions. As part of the procedure for a vehicle manufacturer to obtain emission certification for a particular model/engine family the manufacturer must demonstrate that the vehicle(s) can pass the FTP defined driving cycle **two consecutive times** while monitoring various components/systems. Some of the components/systems must be monitored either once per driving cycle or continuously.

1. Components/systems required to be monitored **once within one driving cycle:**

- Oxygen Sensors
- Secondary Air Injection System
- Catalyst Efficiency
- Evaporative Vapor Recovery System

NOTE: Due to the complexity involved in meeting the test criteria within the FTP defined driving cycle, all tests may not be completed within one "customer driving cycle". The test can be successfully completed within the FTP defined criteria, however customer driving styles may differ and therefore may not always monitor all involved components/systems in one "trip".

Components/systems required to be monitored **continuously**:

- Misfire Detection
- Fuel system
- Oxygen Sensors
- All emissions related components/systems providing or getting electrical connections to the DME, EGS, or EML.

cardiagn.com

The graph shown below is an **example** of the driving cycle that is used by BMW to complete the FTP.

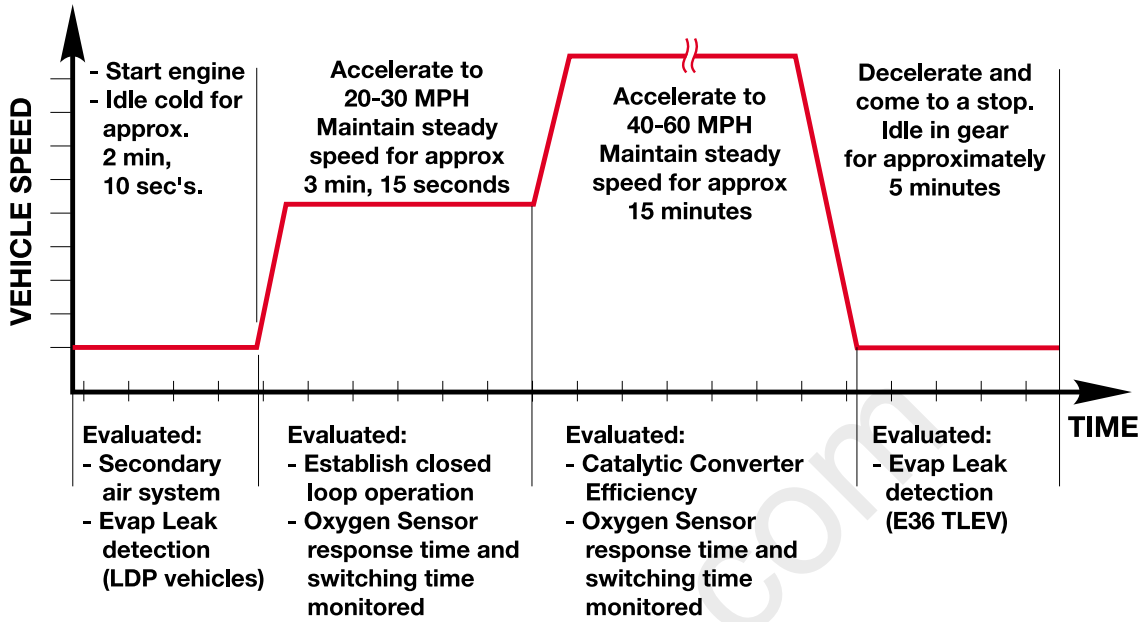


The diagnostic routine shown above will be discontinued whenever:

- Engine speed exceeds 3000 RPM
- Large fluctuations in throttle angle
- Road speed exceeds 60 MPH

**NOTE:** The driving criteria shown can be completed within the FTP required ~11 miles in a controlled environment such as a dyno test or test track.

A "customer driving cycle" may vary according to traffic patterns, route selection and distance traveled, which may not allow the "diagnostic trip" to be fully completed each time the vehicle is operated.

cardiagn.com

# OBD II FUNCTION: "CHECK ENGINE" (MIL) LIGHT

In conjunction with the CARB/OBD II regulations the "CHECK ENGINE" light (also referred to as the Malfunction Indicator Light - MIL) is to be illuminated:

- Upon the completion of the **second consecutive driving cycle** where the previously faulted system is monitored again and the emissions relevant fault is again present.
- Immediately if a catalyst damaging fault occurs (see Misfire Detection).

The illumination of the check engine light is performed in accordance with the Federal Test Procedure (FTP) which requires the lamp to be illuminated when:

- A malfunction of a component that can affect the emission performance of the vehicle occurs and causes emissions to exceed 1.5 times the standards required by the (FTP).
- Manufacturer-defined specifications are exceeded.
- An implausible input signal is generated.
- Catalyst deterioration causes HC-emissions to exceed a limit equivalent to 1.5 times the standard (FTP).
- Misfire faults occur.
- A leak is detected in the evaporative system
- The oxygen sensors observe no purge flow from the purge valve/evaporative system.
- Engine control module fails to enter closed-loop operation within a specified time interval.
- Engine control or automatic transmission control enters a "limp home" operating mode.
- Key is in the "ignition" on position before cranking (Bulb Check Function).

Within the BMW system the illumination of the check engine light is performed in accordance with the regulations set forth in CARB mail-out 1968.1 and as demonstrated via the Federal Test Procedure (FTP). The following information provides several examples of when and how the "Check Engine" Light is illuminated based on the "customer drive cycle" (DC):

cardiagn.com

| | DRIVE CYCLE # 1 | | | DRIVE CYCLE # 2 | | | DRIVE CYCLE # 3 | | | DRIVE CYCLE # 4 | | | DRIVE CYCLE # 5 | | | * DRIVE CYCLE # 43 | | |
|---|---|---|---|---|---|---|---|---|---|---|---|---|---|---|---|---|---|---|
| TEXT NO. | FUNCTION CHECKED | FAULT CODE SET | MIL STATUS CHECK ENGINE | FUNCTION CHECKED | FAULT CODE SET | MIL STATUS CHECK ENGINE | FUNCTION CHECKED | FAULT CODE SET | MIL STATUS CHECK ENGINE | FUNCTION CHECKED | FAULT CODE SET | MIL STATUS CHECK ENGINE | FUNCTION CHECKED | FAULT CODE SET | MIL STATUS CHECK ENGINE | FUNCTION CHECKED | FAULT CODE ERASED | MIL STATUS CHECK ENGINE |
| 1. | YES | YES | OFF | | | | | | | | | | | | | | | |
| 2. | YES | YES | OFF | YES | YES | ON | | | | | | | | | | | | |
| 3. | YES | YES | OFF | NO | NO | OFF | YES | YES | ON | | | | | | | | | |
| 4. | YES | YES | OFF | YES | NO | OFF | YES | NO | OFF | YES | YES | OFF | YES | YES | ON | | | |
| 5. | YES | YES | OFF | YES | YES | ON | YES | NO | ON | YES | NO | ON | YES | NO | OFF | | | |
| 6. | YES | YES | OFF | YES | YES | ON | YES | NO | ON | YES | NO | ON | YES | NO | OFF | YES | FAULT CODE ERASED | OFF |

1. A fault code is stored within the respective control module upon the first occurrence of a fault in the system being checked.

2. The "Check Engine" (MIL) light will not be illuminated until the completion of the second consecutive "customer driving cycle" where the previously faulted system is again monitored and a fault is still present or a catalyst damaging fault has occurred.

3. If the second drive cycle was not complete and the specific function was not checked as shown in the example, the engine control module counts the third drive cycle as the “next consecutive“ drive cycle. The check engine light is illuminated if the function is checked and the fault is still present.

4. If there is an intermittent fault present and does not cause a fault to be set through multiple drive cycles, two ***complete*** consecutive drive cycles with the fault present are required for the Check Engine light to be illuminated.

5. Once the "Check Engine" light is illuminated it will remain illuminated unless the specific function has been checked without fault through three complete consecutive drive cycles.

6. The fault code will also be cleared from memory automatically if the specific function is checked through 40* consecutive drive cycles without the fault being detected or with the use of either the DIS, MODIC or Scan tool.

   *** NOTE:** In order to clear a catalyst damaging fault (see Misfire Detection) from memory, the condition under which the fault occurred must be evaluated for 80 consecutive cycles without the fault reoccurring.

With the use of a universal scan tool, connected to the "OBD" DLC an SAE standardized DTC can be obtained, along with the **condition associated** with the illumination of the "Check Engine" light.

Using the DIS or MODIC, a fault code and the conditions associated with its setting **can be obtained prior to the illumination of the "Check Engine" light.**

cardiagn.com

# OBD II DIAGNOSTIC TROUBLE CODES (DTC)

The Society of Automotive Engineers (SAE) established the Diagnostic Trouble Codes used for OBD II systems (SAE J2012). The DTC's are designed to be identified by their alpha/numeric structure. The SAE has designated the emission related DTC's to start with the letter "P" for Powertrain related systems, hence their *nickname* "P-code".

**For example:** **P 0 4 4 0**

P-Powertrain, B-Body, C-Chassis

**DTC Source;** 0-SAE, 1-BMW

**System;** 0-Total System
1-Air/Fuel Induction
2-Fuel Injection
3-Ignition System or Misfire
4-Auxiliary Emission Control
5-Vehicle Speed & Idle Control
6-Control Module Inputs/Outputs
7-Transmission

Sequentially numbered fault identifying individual components or circuits (00-99)

cardiagn.com

- DTC's are stored whenever the Check Engine Light (MIL) is illuminated.
- A requirement of CARB/EPA is providing universal diagnostic access to DTC's via a standardized Diagnostic Link Connector (DLC) using a standardized tester (scan tool).
- DTC's only provide one set of environmental operating conditions when a fault is stored. This single "Freeze Frame" or snapshot refers to a block of the vehicles environmental conditions for a specific time when the fault first occurred. The information which is stored is defined by SAE and is limited in scope. This information may not even be specific to the type of fault.

## DTC Storage:

The table represents the stored information that would be available via an aftermarket scan tool if the same fault occurred 5 times.

| **Bosch Systems** | **Aftermarket Scan Tool** |
|---|---|
| initial fault | SAE defined freeze frame conditions |
| 2nd occurrence | n/a |
| 3rd occurrence | n/a |
| last occurrence | n/a |
| | |
| **Siemens Systems** | **Aftermarket Scan Tool** |
| initial fault | SAE defined freeze frame conditions |
| | |
| | |
| | |

## Scan Tool Connection (to 6/00)

Starting with the 1995 750iL, and soon after on all 1996 model year BMW vehicles, a separate OBD II Diagnostic Link Connector (DLC) was added.

The DLC provides access for an aftermarket scan tool to all emission related control systems (DME, AGS/EGS and EML). This diagnostic communication link uses the existing TXD II circuit in the vehicle through a separate circuit on the DLC when the 20 pin cap is installed.

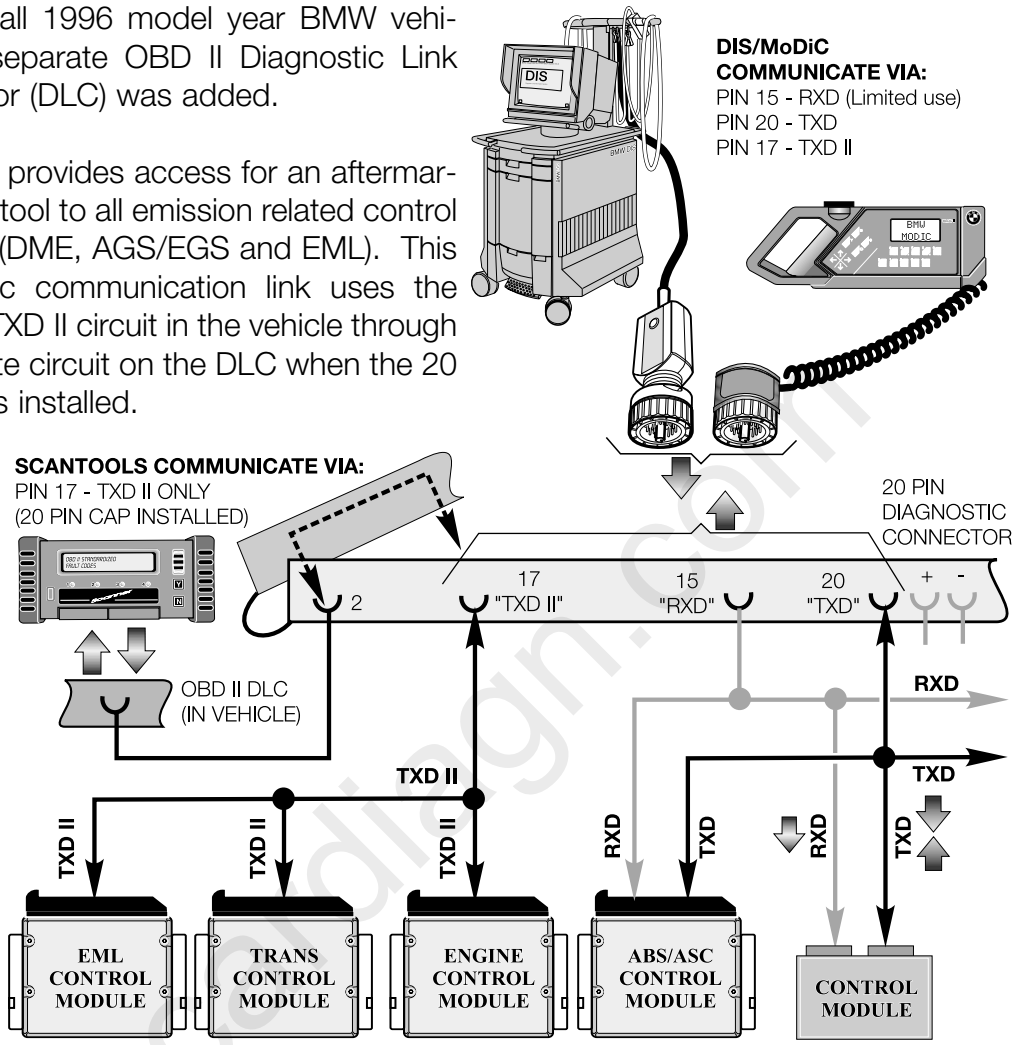


cardiagn.com

## Scan Tool Display

**Example:** A fault was induced into a 1998 750iL by removing the wire connector from Air Mass Meter. Using an aftermarket scan tool the following information can be displayed:

| | |
|---|---|
| DIAG. TROUBLE CODES | |
| ECU: | $12 (Engine) |
| Number of DTCs: | 1 |
| *P0100 | Manufacturer controlled fuel and air metering |
| | |
| ENTER = | FREEZE FRAME |

| | |
|---|---|
| DTC | P0100 |
| ENGINE SPD | 905 RPM |
| ECT | 160 F |
| VEHICLE SPD | 0 MPH |
| ENGINE LOAD | 3.9% |
| FUEL STAT 1 | OL |
| FUEL STAT 2 | OL |
| ST FT 1 | 0.0% |
| LT FT 1 | 1.6% |
| ST FT 2 | 0.0% |
| LT FT 2 | 3.1% |

## 20 PIN DIAGNOSTIC SOCKET DELETION

## Model: E39,E46,E52,E53

## Production Date: E46 from 6/00
## E39,E52,E53 from 9/00

For model year 2001 the E39, E46 and E53 will eliminate the 20 pin diagnostic connector from the engine compartment. The 16 pin OBD II connector located inside the vehicle will be the only diagnosis port.

The E38 and Z3 will continue to use the 20 pin connector.

The 16 pin OBD II connector has been in all BMWs since 1996 to comply with OBD II regulations requiring a standardized diagnostic port.

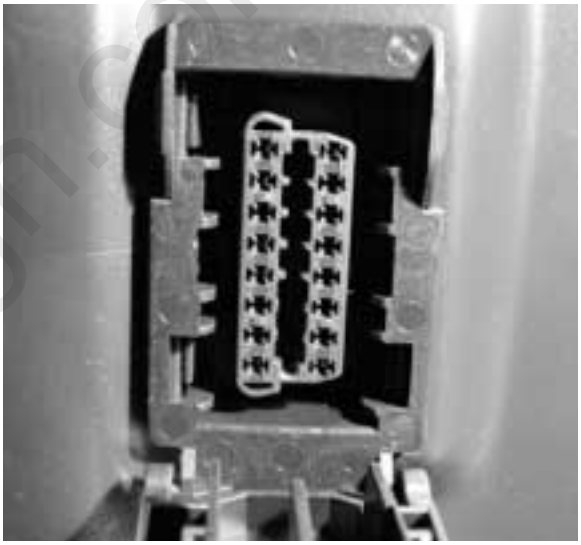

Previously before 2001, only emissions relevant data could be extracted from the OBD II connector because it did not provide access to TXD (D-bus). The TXD line is connected to pin 8 of the OBD II connector on vehicles without the 20 pin diagnostic connector.

The cap to the OBD II connector contains a bridge that links KL 30 to TXD and TXD II. This is to protect the diagnostic circuit integrity and prevent erroneous faults.

The OBD II connector is located in the drivers footwell to the left of the steering column of E39, E46 and E53 vehicles.

cardiagn.com

## Diagnostics Via the OBD II Connector

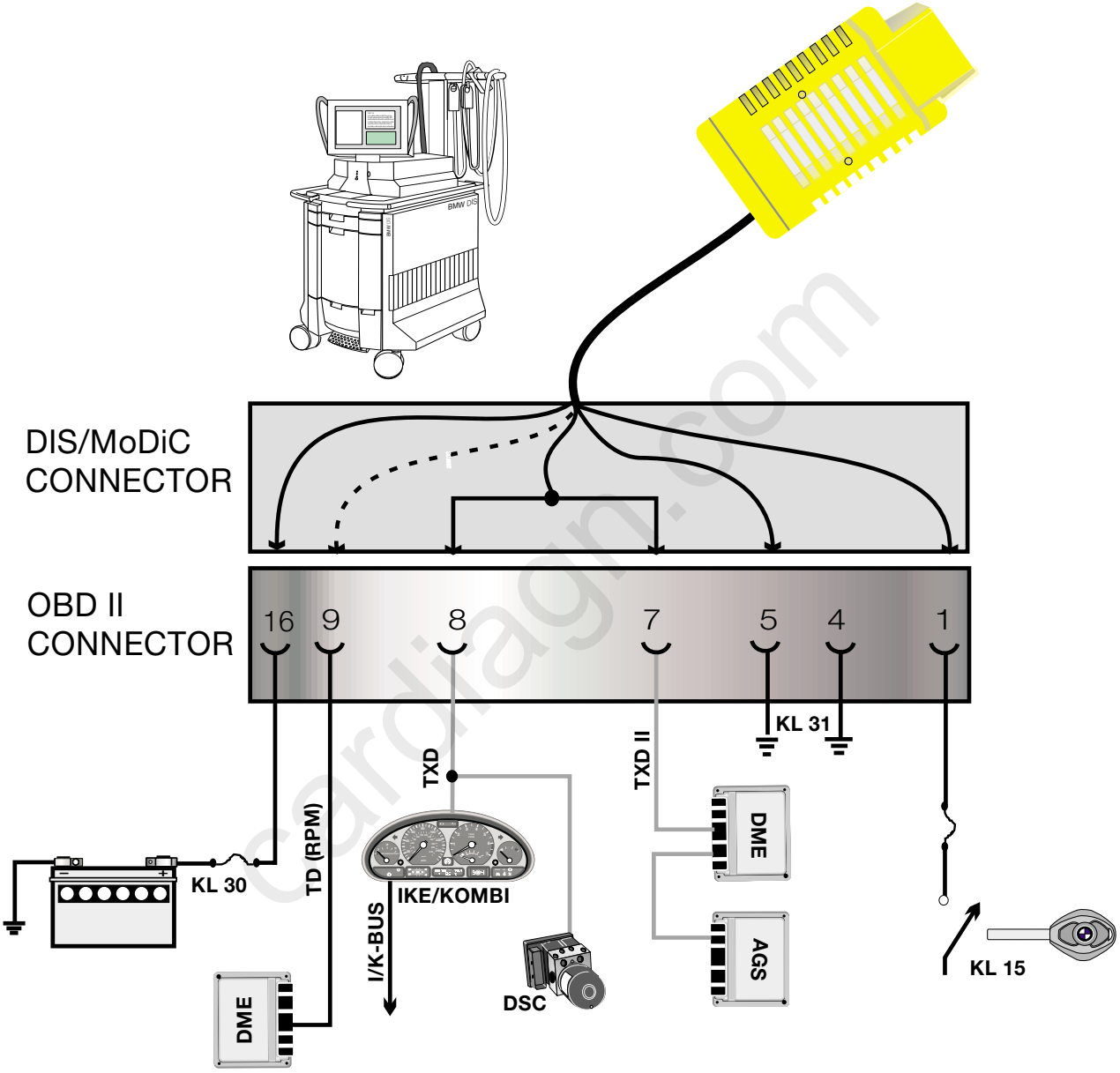


cardiagn.com

# BMW FAULT CODE (DIS/MoDiC)

- BMW Codes are stored as soon they occur even before the Check Engine Light (MIL) comes on.

- BMW Codes are defined by BMW, Bosch, and Siemens Engineers to provide greater detail to fault specific information.

- Siemens systems - (1) set of (4) fault specific environmental conditions are stored with the first fault occurrence. This information can change and is specific to each fault code to aid in diagnosing. A maximum of (10) different faults containing (4) environmental conditions can be stored.

- Bosch Systems - a maximum of (4) sets of (3) fault specific environmental conditions are stored within each fault code. This information can change and is specific to each fault code to aid in diagnosing. A maximum of (10) different faults containing (3) environmental conditions can be stored.

- BMW Codes also store and displays a "time stamp" when the fault last occurred.

- A fault qualifier gives more specific detailed information about the type of fault (upper limit, lower limit, disconnection, plausibility, etc.).

- BMW Fault Codes will alert the technician of the current fault status. He will be advised if the fault is actually still present, not currently present or intermittent. The fault specific information is stored and accessible through DIS or Modic.

- BMW Fault Codes determine the diagnostic output for BMW DIS and Modic.

## BMW Fault Code Storage:

The table below represents the information that would be available via the DIS tester if the same fault occurred 5 times.

| **Bosch Systems** | **DIS Tester Information** |
|---|---|
| initial fault | 3 fault specific environmental conditions with time stamp, counter, and if fault is currently present or intermittent |
| 2nd occurrence | 3 fault specific environmental conditions with time stamp, counter, and if fault is currently present or intermittent |
| 3rd occurrence | 3 fault specific environmental conditions with time stamp, counter, and if fault is currently present or intermittent |
| last occurrence | 3 fault specific environmental conditions with time stamp, counter, and if fault is currently present or intermittent |
| **Siemens Systems** | **DIS Tester Information** |
| initial fault | 4 fault specific environmental conditions with time stamp, counter, and if fault is currently present or intermittent |

cardiagn.com

# SIEMENS ENGINE MANAGEMENT SYSTEM

This Siemens system is designated as MS42.0.

Siemens MS42.0 was developed to meet the needs of Low Emission Vehicle (LEV) compliancy and OBD II. This system also includes control of the Motor-driven Throttle Valve (MDK).

The ECM uses a pc-board single-processor control unit in the new SKE housing. Mounted in the E-Box (next to brake master cylinder). The MS 42.0 ECM is flash programmable as seen with previous systems.

ECM hardware includes:

Modular plug connectors featuring 5 connectors in the SKE housing with 134 pins.

- Connector 1 = Supply voltages and grounds
- Connector 2 = Peripheral signals (oxygen sensors, CAN, etc.)
- Connector 3 = Engine signals
- Connector 4 = Vehicle signals
- Connector 5 = Ignition signals

Special features:

- Flash EPROM which is adaptable to several M52 LEV engines and has the capability to be programmed up to 13 times

- Once a control unit is installed and coded to a vehicle it cannot be swapped with another vehicle for diagnosing or replacement (because of EWS 3.3). A new ECM must be installed if necessary.

cardiagn

# MS 42.0 I-P-O

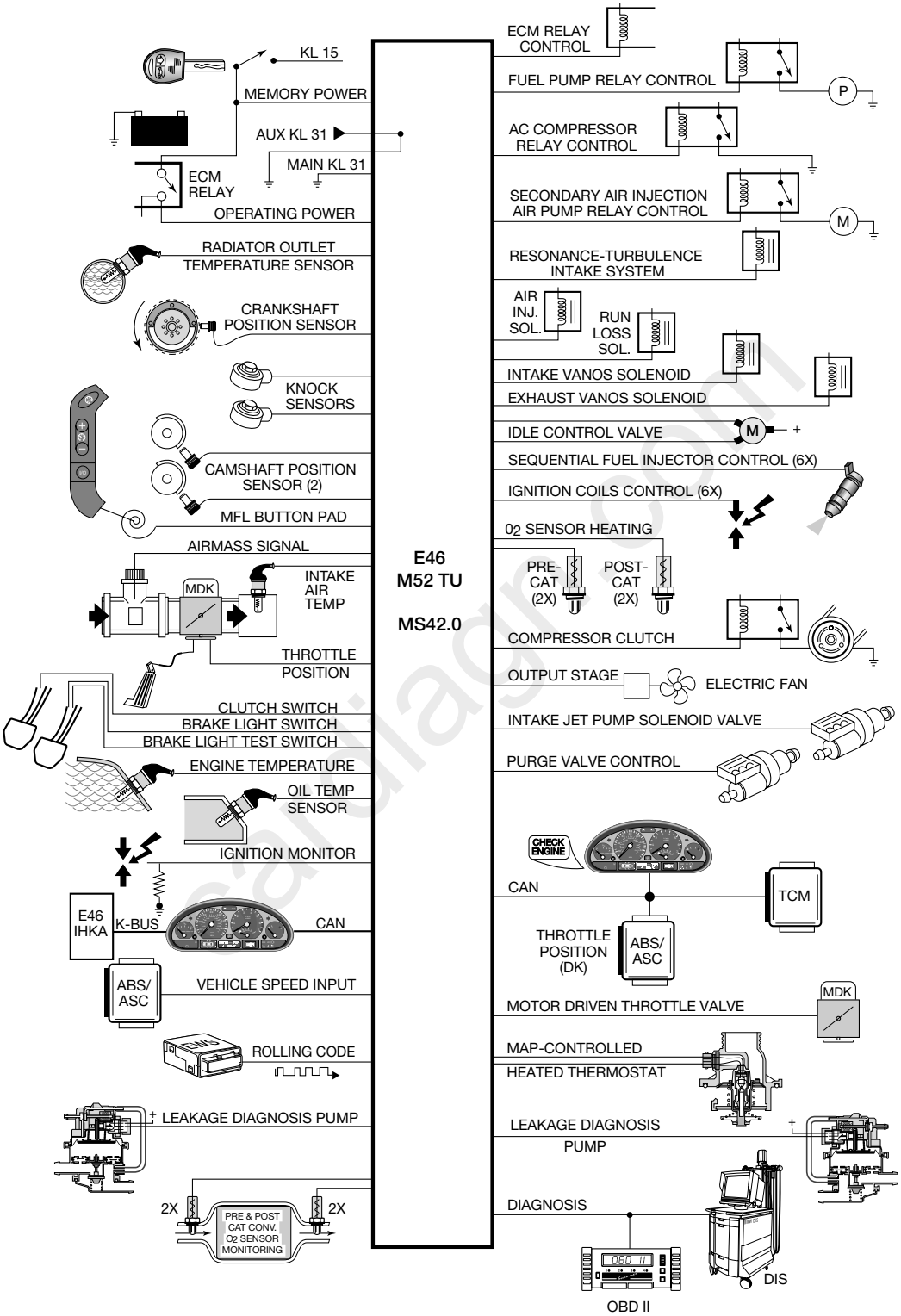
KL 15
MEMORY POWER
AUX KL 31
MAIN KL 31
ECM RELAY
OPERATING POWER
RADIATOR OUTLET TEMPERATURE SENSOR
CRANKSHAFT POSITION SENSOR
KNOCK SENSORS
CAMSHAFT POSITION SENSOR (2)
MFL BUTTON PAD
AIRMASS SIGNAL
MDK
INTAKE AIR TEMP
THROTTLE POSITION
CLUTCH SWITCH
BRAKE LIGHT SWITCH
BRAKE LIGHT TEST SWITCH
ENGINE TEMPERATURE
OIL TEMP SENSOR
IGNITION MONITOR
E46 IHKA
K-BUS
CAN
ABS/ ASC
VEHICLE SPEED INPUT
ROLLING CODE
LEAKAGE DIAGNOSIS PUMP
2X
PRE & POST CAT CONV. O2 SENSOR MONITORING
2X
E46
M52 TU
MS42.0
ECM RELAY CONTROL
FUEL PUMP RELAY CONTROL
P
AC COMPRESSOR RELAY CONTROL
SECONDARY AIR INJECTION AIR PUMP RELAY CONTROL
M
RESONANCE-TURBULENCE INTAKE SYSTEM
AIR INJ. SOL.
RUN LOSS SOL.
INTAKE VANOS SOLENOID
EXHAUST VANOS SOLENOID
IDLE CONTROL VALVE
M
+
SEQUENTIAL FUEL INJECTOR CONTROL (6X)
IGNITION COILS CONTROL (6X)
O2 SENSOR HEATING
PRE-CAT (2X)
POST-CAT (2X)
COMPRESSOR CLUTCH
OUTPUT STAGE
ELECTRIC FAN
INTAKE JET PUMP SOLENOID VALVE
PURGE VALVE CONTROL
CHECK ENGINE
CAN
TCM
THROTTLE POSITION (DK)
ABS/ ASC
MDK
MOTOR DRIVEN THROTTLE VALVE
MAP-CONTROLLED
HEATED THERMOSTAT
LEAKAGE DIAGNOSIS PUMP
+
DIAGNOSIS
DIS
OBD II

# SCOPE OF INPUT FUNCTIONS
# BOSCH OXYGEN SENSORS

The MS42.0 system uses Bosch LSH 25 oxygen sensors that function basically the same as previously used (in Bosch systems). The voltage range is between 0 - 800 mV.

pre O2 sensor

post O2 sensor

The location has changed, the pre-cat sensors are mounted on top of the exhaust manifolds. The catalysts are now integral with the exhaust manifolds.

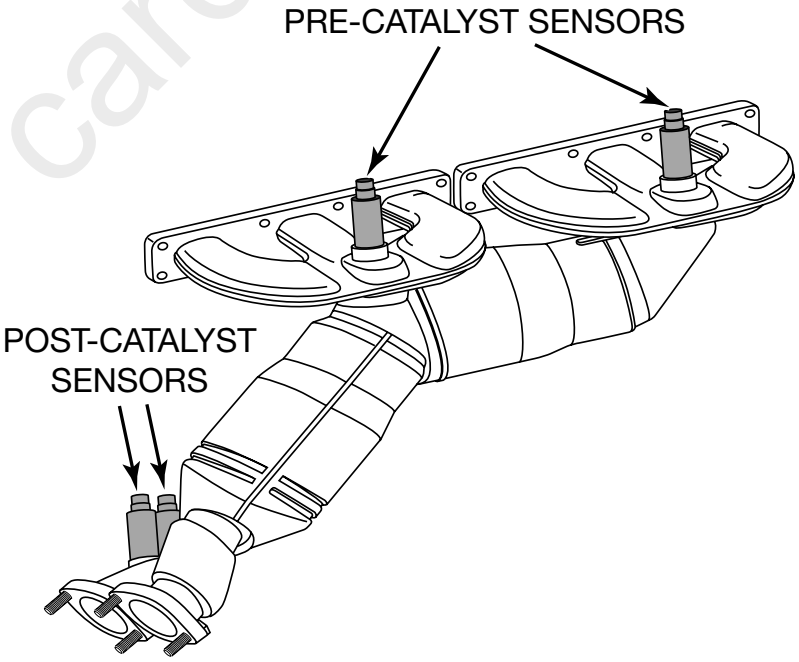


cardiagn

## OXYGEN SENSOR SIGNAL INFLUENCE ON INJECTOR “OPEN” TIME

The ECM monitors the:

- Amplitude of the signal (highest voltage or range sensor is producing)
- Switching time of the signal (how fast from lean to rich)
- Frequency of complete cycles (how many within a period of time)

These characteristics provide info to the ECM that reflect the overall condition of the sensor.

## POST CATALYTIC CONVERTER SENSOR SIGNAL

The post catalyst O2 sensors monitor the efficiency of the catalyst as a requirement of OBD II. This signal also provides feedback of the pre-catalyst sensors efficiency and can cause the ECM to “trim” the ms injection time to correct for slight deviations.

### Bosh Systems:

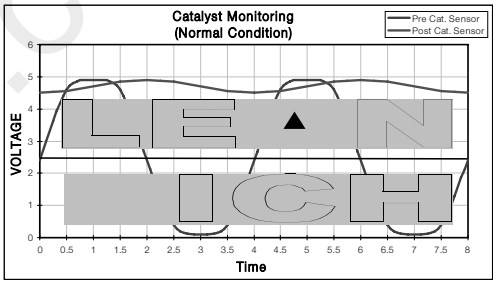


- If the catalyst is operating efficiently, most of the remaining oxygen in the exhaust gas is burned (lack of O2 - “constant lean signal”).

  The sensor signal fluctuates slightly in the higher end of the voltage scale.

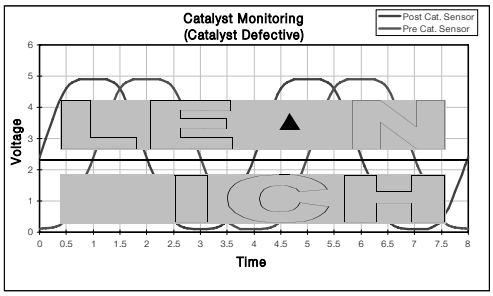


- If the post sensor shows *excessive fluctuations* (which echo the scope pattern of the pre sensor), this indicates that the catalytic converter is not functioning correctly and cannot consume the O2 (fault set).

- If the post sensor fluctuations move out of the normal voltage “window”, this indicates that the pre sensor is not performing properly due to *slight* deterioration. These systems can also “trim” the ms injection time to compensate for this.

The constantly changing oxygen sensor input to the ECM is needed to correct the ms injection time to ensure that the ideal air/fuel ratio is maintained.

cardiagn.com

# CAMSHAFT SENSOR
## -INTAKE AND EXHAUST CAMSHAFTS

The "static" Hall sensors are used so that the camshaft positions are recognized once ignition is “on” - even before the engine is started.

The function of the intake cam sensor:

- Cylinder bank detection for preliminary injection
- Synchronization
- Engine speed sensor (if crankshaft speed sensor fails)
- Position control of the intake cam (VANOS)

The exhaust cam sensor is used for position control of the exhaust cam (VANOS)

If these sensors fail there are no substitute values, the system will operate in the fail-safe mode with no VANOS adjustment. The engine will still operate, but torque reduction will be noticeable.

NOTE: Use caution on repairs as not to bend the impulse wheels

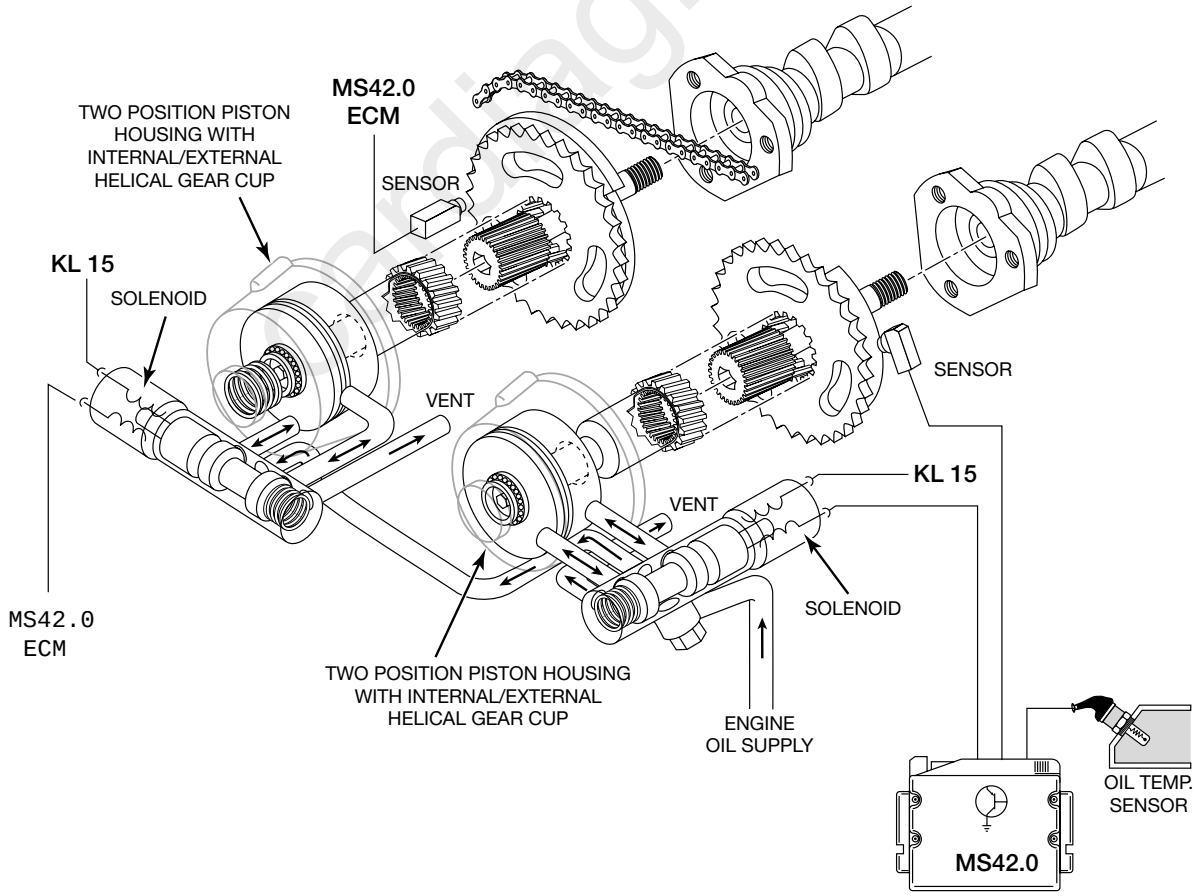

# CRANKSHAFT SENSOR

The crankshaft sensor is a dynamic Hall-effect sensor (mounted through the engine block), the signal is sent the moment the crankshaft begins to rotate.

The pulse wheel is mounted directly to the crankshaft.

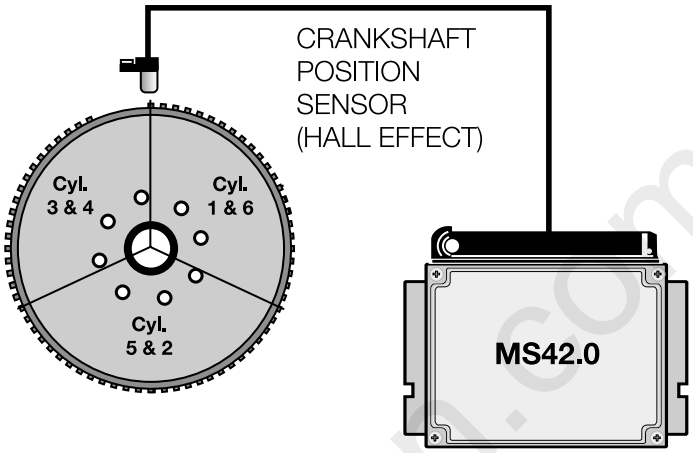


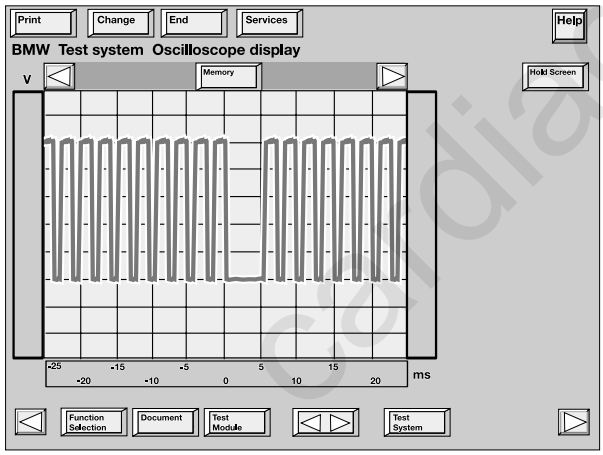


**SMOOTH RUNNING ENGINE (NOTE SQUARE WAVE SIGNAL)**

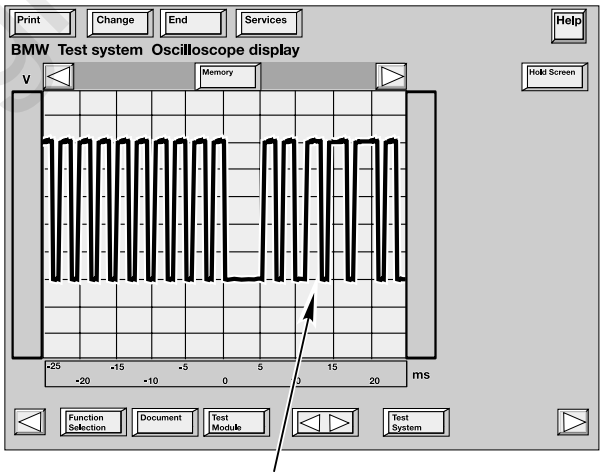


**ENGINE MISFIRE DETECTED**

cardiagn.com

# MISFIRE DETECTION

As part of the CARB/OBD regulations the engine control module must determine if misfire is occurring and also identify the specific cylinder(s) and the severity of the misfire event, and whether it is emissions relevant or catalyst damaging. In order to accomplish these tasks the control module monitors the crankshaft for acceleration losses during firing segments of each cylinder based on firing order.

Misfire Detection Example: M52 (6 Cyl.) with Siemens System

The misfire/engine roughness calculation is derived from the differences in the period duration (T) of individual increment gear segments. Each segment period consist of an angular range of 120° crank angle that starts 78° before Top Dead Center (TDC).

Increment gear wheel segment period measurement:

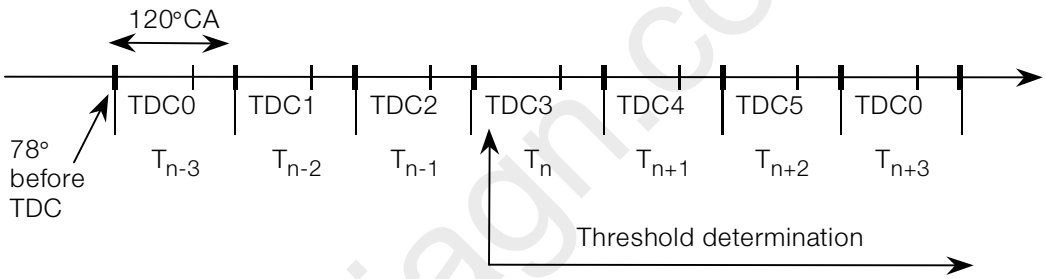


- If the combustion process in all cylinders is functioning correctly, the period duration of each segment will be identical (i.e. T0 = T1 = T2 = T3 = T4 = T5).

- If a misfire is encountered in a cylinder, the period duration (T) of that cylinder will be extended by a fraction of a millisecond (i.e. T3 > T0, T1, T2, T4, T5).

- All measured values of T are evaluated within the DME, corrected based on sensor adaptation and compared to a set of predetermined values that are dependent on engine speed, load and engine temperature.

If the expected period duration is greater than the permissible value a misfire fault for the particular cylinder is stored in the fault memory of the DME. Depending on the level of misfire rate measured the control unit will illuminate the "Check Engine" light, may cut-off fuel to the particular cylinder and may switch lambda operation to open-loop. All misfire faults are weighted to determine if the misfire is emissions relevant or catalyst damaging.

cardiagn.com

## EMISSIONS RELEVANT:

During an interval of 1000 crankshaft revolutions the misfire events of all cylinders are added and if the sum is greater than a predetermined value a fault will be set identifying the particular cylinder(s). The Check Engine light will be illuminated during and after the second cycle if the fault is again present.

## CATALYST DAMAGING:

During an interval of 200 crankshaft revolutions the misfire events of all cylinders are added and if the sum is greater than a predetermined value a fault will be set identifying the particular cylinders(s). The "Check Engine" lamp:

- On vehicles with a Siemens Control Module (M52 engines) - the lamp will immediately go to a steady illumination since fuel to the injector(s) is removed. Fuel cut-off to the cylinder will resume after several (>> 7) periods of decel if crankshaft sensor adaptation is successfully completed or the engine is shut-off and restarted.

- On vehicles with a Bosch Control Module (M44, M62 & M73 engines) - the lamp will blink as long as the vehicle is operated within the specific criteria under which the fault occurred. Fuel to the misfiring cylinder is not cut-off as long as the "Check Engine" light is blinking.

In each case the number of misfire events permitted is dependent on engine speed, load and temperature map.

The process of misfire detection continues well after the diagnostic drive cycle requirements have been completed. Misfire detection is an on-going monitoring process that is only discontinued under certain conditions.

Misfire detection is only disabled under the following conditions:

| REQUIREMENTS | STATUS/CONDITION |
|---|---|
| Engine Speed | < 512 RPM |
| Engine Load | Varying/Unstable |
| Throttle Angle | Varying/Unstable |
| Timing | Timing retard request active (i.e. knock control - ASC, AGS) |
| Engine Start-up | Up to 5 seconds after start-up |
| A/C | Up to 0.5 seconds after A/C activation |
| Decel fuel cut-off | Active |
| Rough road recognition | Active |
| ASC Control | Active |

cardiagn.com

# OBD II - Misfire Faults

| FAILED COMPONENT | POSSIBLE FAULT | MISFIRE EFFECT/LOCATION |
|---|---|---|
| Spark plug | electrode gap too small | affected cylinders |
| | electrodes missing | affected cylinders |
| | electrodes oil/fuel soaked | affected cylinders |
| | | |
| | electrodes oil/feul soaked fouled | |
| | spark plug ceramic broken | affected cylinders |
| | oil level too high | most likely more than one cylinder affected |
| | | |
| | oil foaming | |
| | oil level too high, oil/fuel fouled | |
| | heat range too cold | |
| | crank case ventilation defective | most likely more than one cylinder affected |
| Spark plug connector | wet, water or moisture | most likely more than one cylinder affected |
| | broken | affected cylinders |
| Ignition Coil | internal defect, arcing | affected cylinders |
| Connectors ignition | corrosion | one or more cylinders |
| | pin backed out | one or more cylinders |
| | plug loose | one or more cylinders |
| | loose wire from connector | one or more cylinders |
| Injection Valve | metal filing | on the affected cylinders |
| | leaking | on the affected cylinders |
| | carbon fouled | one or more cylinders |
| | dirty/contaminated | one or more cylinders |
| Injector connectors | corrosion | one or more cylinders |
| | pin backed out | one or more cylinders |
| | plug loose | one or more cylinders |
| | loose wire from connector | one or more cylinders |
| Intake manifold leaks | intake plenum, unmetere air leak (i.e. injector seals) | |
| Intake/Exhaust valve | carbon built up (intake) | most likely more than one cylinder affected |
| | burnt or damaged | on the affected cylinders |
| | overrev:intake or exhaust valves leaking (bent) | most likely more than one cylinder affected |

| FAILED COMPONENT | POSSIBLE FAULT | MISFIRE EFFECT/LOCATION |
|---|---|---|
| Camshaft | broken | most likely more than one cylinder affected |
| Piston | hole in piston crown/piston seized in bore | on the affected cylinders |
| Hydraulic lash adjusters (HVA) | defective: i.e. oil bore restricted/blocked | on the affected cylinders |
| | engine oil pressure built up too slow | |
| Fuel pressure | fuel pump, pressure too low | most likely cyl. 1-3 (front cylinders) |
| | fuel filter restricted/ blocked | most likely cyl. 1-3 (front cylinders) |
| | fuel pump, pressure build up too slow after start | most likely cyl. 1-3 (front cylinders) |
| | leaking fuel feed lines | most likely cyl. 1-3 (front cylinders) |
| | pressure regulator defective (metal filing) | most likely cyl. 1-3 (front cylinders) |
| | running loss valve defective | most likely cyl. 1-3 (front cylinders) |
| | fuel tank empty | most likely cyl. 1-3 (front cylinders) |
| | siphon jet pump and fuel tank empty | most likely cyl. 1-3 (front cylinders) |
| | water in fuel tank | most likely more than one cylinder affected |
| Fuel | high content oxygenated | one or more cylinders |
| | non anti carbon additives | one or more cylinders |
| Oxygen sensor | excessive mixture deviation | only the affected bank |
| Purge sytem | excessive rich mixture due to high ambient temperature | one or more banks |
| | blocked fuel tank vent inlet | all cylinders |
| Crank sensor/increment wheel | incorrect input signal for misfire detection | all cylinders |
| | increment wheel loose | all cylinders |
| | increment wheel damaged | affected segment |
| | gap between sensor and increment wheel | affected segment |
| | fly wheel damaged | |
| Catalyst damaged | exhaust back pressure on the affected bank | only the afftected bank |
| DME | final stage igntion/injectors | all cylinder |

obdiagn.com

# MASS AIR FLOW SENSOR HFM

The Siemens mass air flow sensor is functionally the same as on previous systems. The new designation - 2 Type B simply indicates that it is smaller in design.

# SCOPE OF OUTPUT FUNCTIONS

# VANOS CONTROL

With the introduction of double VANOS, the valve timing is changed on both the intake and the exhaust camshafts.

Double VANOS provides the following benefits:

- Torque increase in the low to mid (1500 - 2000 RPM) range without power loss in the upper RPM range.
- Less incomplete combustion when idling due to less camshaft overlap (also improves idle speed characteristics).
- Internal exhaust gas recirculation (EGR) in the part load range (reduces NOx and post-combustion of residual gasses in the exhaust)
- Rapid catalyst warm up and lower “raw” emissions after cold start.
- Reduction in fuel consumption

Double VANOS consists of the following parts:

- Intake and exhaust camshafts with helical gear insert
- Sprockets with adjustable gears
- VANOS actuators for each camshaft
- 2 three-way solenoid switching valves
- 2 impulse wheels for detecting camshaft position
- 2 camshaft position sensors (Hall effect)

The “initial” timing is set by gear positioning (refer to the Repair Instructions for details) and the chain tensioner. As with the previous VANOS, the hydraulically controlled actuators move the helical geared cups to regulate camshaft timing. The angled teeth of the helical gears cause the pushing movement of the helical cup to be converted into a rotational movement. This rotational movement is added to the turning of the camshafts and cause the camshafts to “advance” or “retard”. The adjustment rate is dependent oil temperature, oil pressure, and engine RPM.

cardiagn.com

NOTE: With extremely hot oil temperatures Vanos is deactivated (Powerloss). If the oil is too thick (wrong viscosity) a fault could be set.

When the engine is started, the camshafts are in the “fail-safe” position (deactivated). The intake camshaft is in the RETARDED position - held by oil pressure from the sprung open solenoid. The exhaust camshaft is in the ADVANCED position - held by a preload spring in the actuator and oil pressure from the sprung open solenoid.

After 50 RPM (2-5 seconds) from engine start, the ECM is monitoring the exact camshaft position.

The ECM positions the camshafts based on engine RPM and the throttle position signal. From that point the camshaft timing will be varied based on intake air and coolant temperatures.

The double VANOS system is “fully variable”. When the ECM detects the camshafts are in the optimum positions, the solenoids are modulated (approximately 100-220 Hz) maintaining oil pressure on both sides of the actuators to hold the camshaft timing.

CAUTION: The VANOS MUST be removed and installed exactly as described in the Repair Instructions!

NOTE: If the VANOS camshaft system goes to the fail-safe mode (deactivated) there will be a noticeable loss of power. This will be like driving with retarded ignition or starting from a stop in third gear.

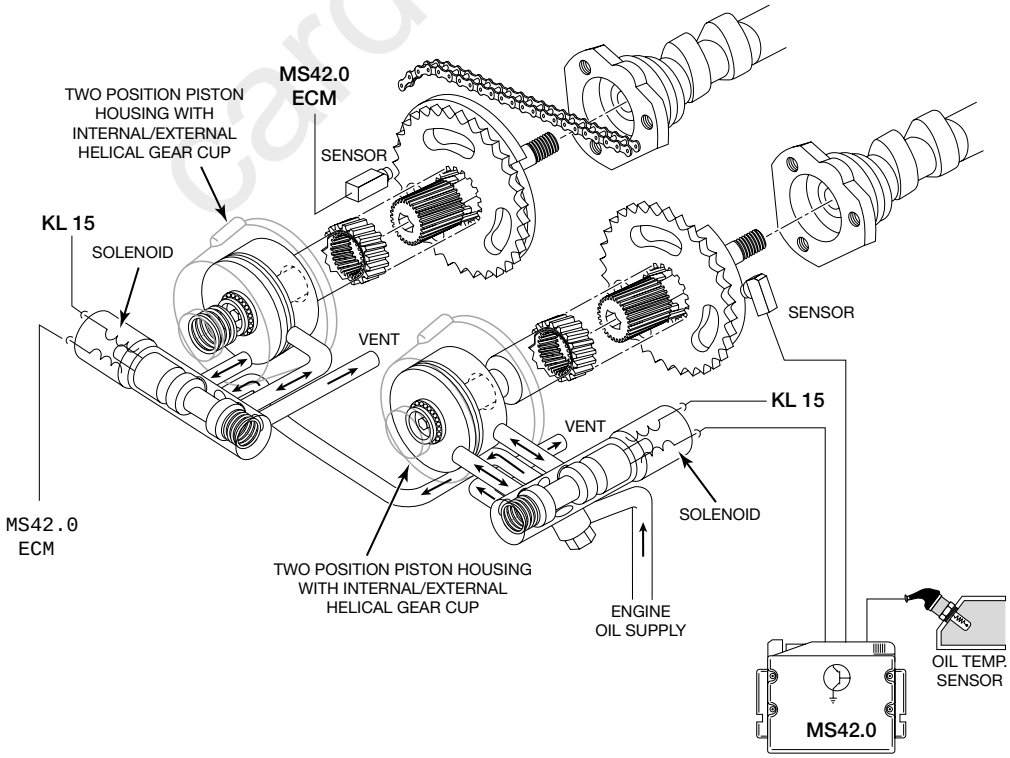

## DEACTIVATED

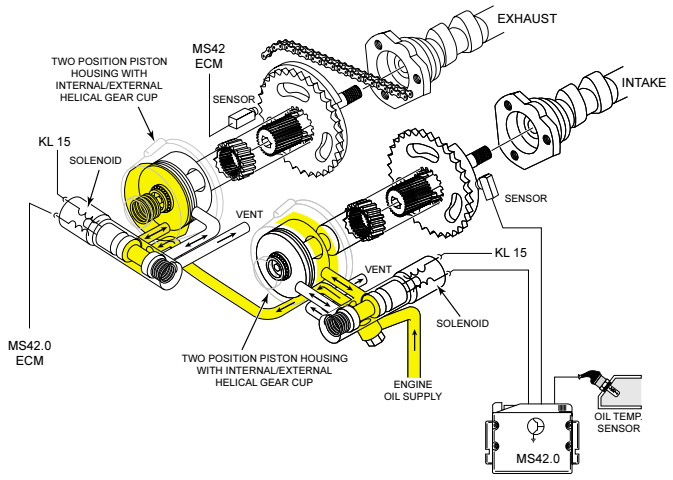


**EXHAUST:** Advanced piston moved in

**INTAKE:** Retard piston moved out

## ACTIVATED

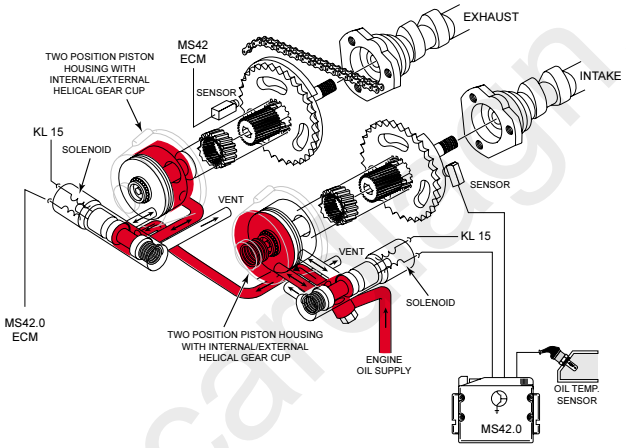


**EXHAUST:** Advanced piston moved out

**INTAKE:** Retard piston moved in

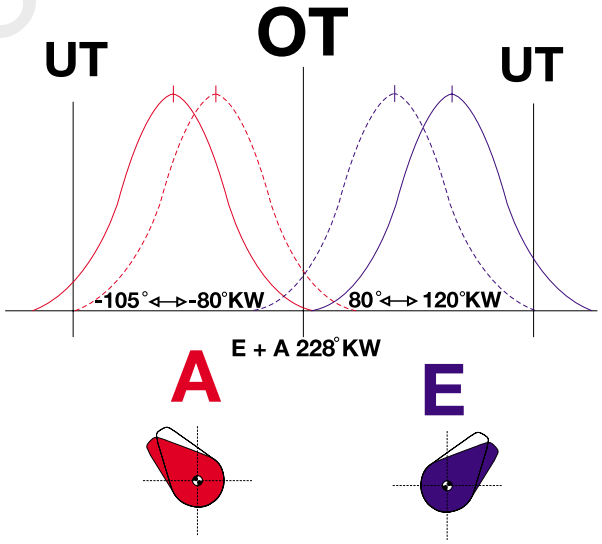


carsign.com

The dual VANOS in conjunction with the variable intake manifold provides an additional emission control feature.

Because of the improved combustion, the camshaft timing is adjusted for more overlap. The increased overlap supports internal exhaust gas recirculation (EGR) which reduces tailpipe emissions and lowers fuel consumption.

During the part load engine range, the intake camshaft overlap opens the intake valve. This allows limited exhaust gas reflow the intake manifold.

The “internal” EGR reduces the cylinder temperature thus lowering NOx. This feature provides EGR without the external hardware as seen on previous systems.

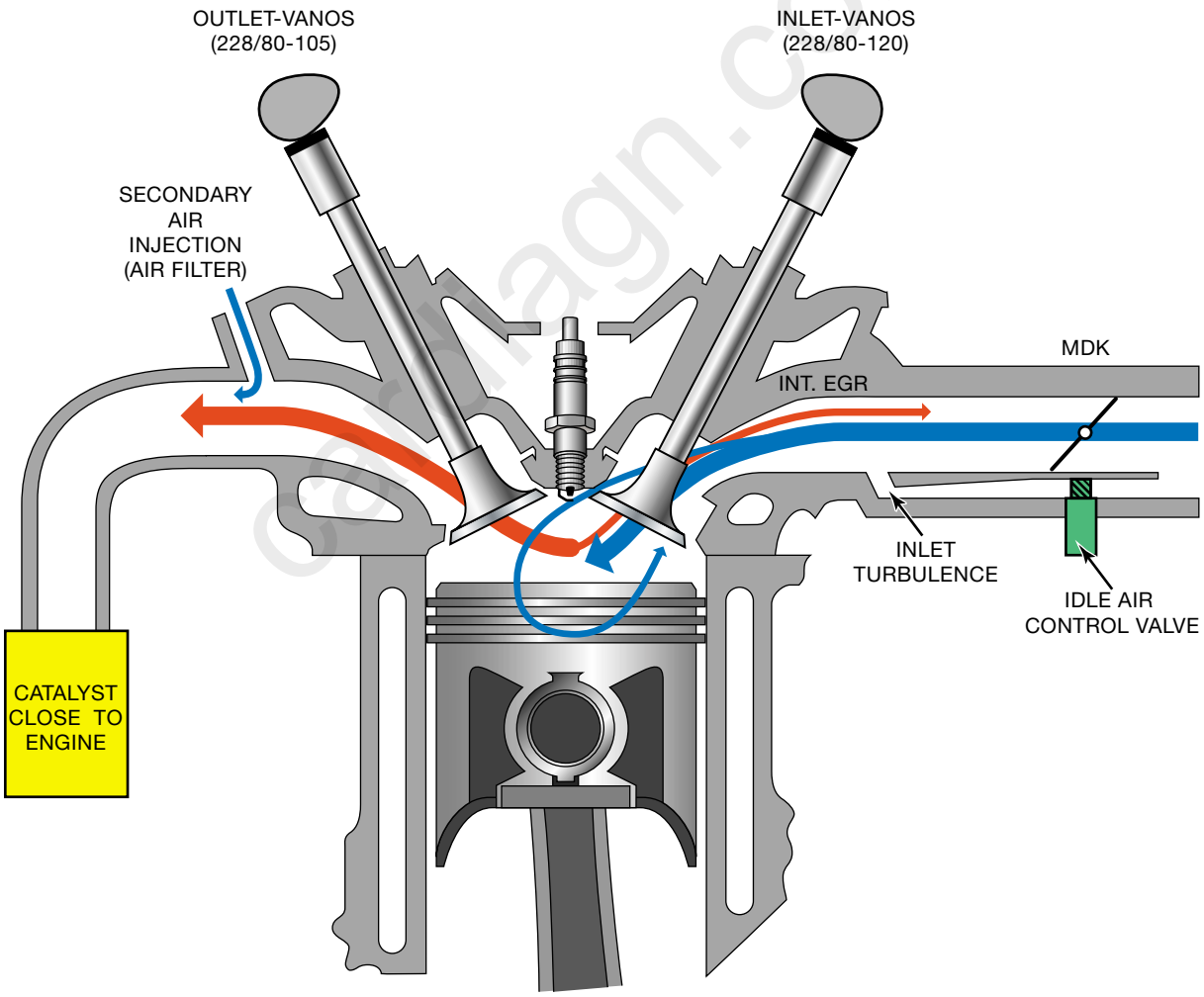

# ELECTRIC FAN

The electric cooling fan is controlled by the ECM. The ECM uses a remote power output final stage (mounted on the fan housing)

The power output stage receives power from a 50 amp fuse (located in glove box above the fuse bracket). The electric fan is controlled by a pulse width modulated signal from the ECM.

The fan is activated based on the ECM calculation (sensing ratio) of:

- Coolant outlet temperature
- Calculated (by the ECM) catalyst temperature
- Vehicle speed
- Battery voltage
- Air Conditioning pressure (calculated by IHKA and sent via the K-Bus to the ECM)

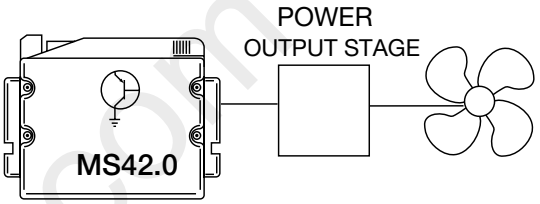


Activation of the electric fan:

When the vehicle is first started the fan is activated briefly (20% of maximum speed), then it is switched off. This procedure is performed for diagnostic purposes.

The voltage generated by the fan when it slows down (it becomes a generator at this time) must meet the power output stages programmed criteria. This will confirm the RPM of the fan, if this is not met the signal wire from the output stage is switched to ground and a fault is set in memory.

NOTE: If the ECM indicates a fault check the fan for freedom of movement

After the initial test has been performed, the fan is brought up to the specified operating speed. At 10% (sensing ratio) the fan runs at 1/3 speed. At a sensing ratio of between 90-95% the fan is running at maximum speed. Below 10% or above 95% the fan is stationary.

The sensing ratio is suppressed by a hysteresis function, this prevents speed fluctuation. When the A/C is switched on, the electric fan is not immediately activated.

After the engine is switched off, the fan may continue to operate at varying speeds (based on the ECM calculated catalyst temperature). This will cool the radiator down form a heat surge (up to 10 minutes).

cardiagn.com

# RUNNING LOSSES

The fuel circuit changeover (running losses) has not changed in operation from the previous system. The attached fuel pressure regulator no longer controls fuel pressure influenced by vacuum supply.

The ECM now determines the fuel quantity compensation for manifold vacuum changes. This is based on throttle position sensor, air mass meter, load, etc. for precise compensation.

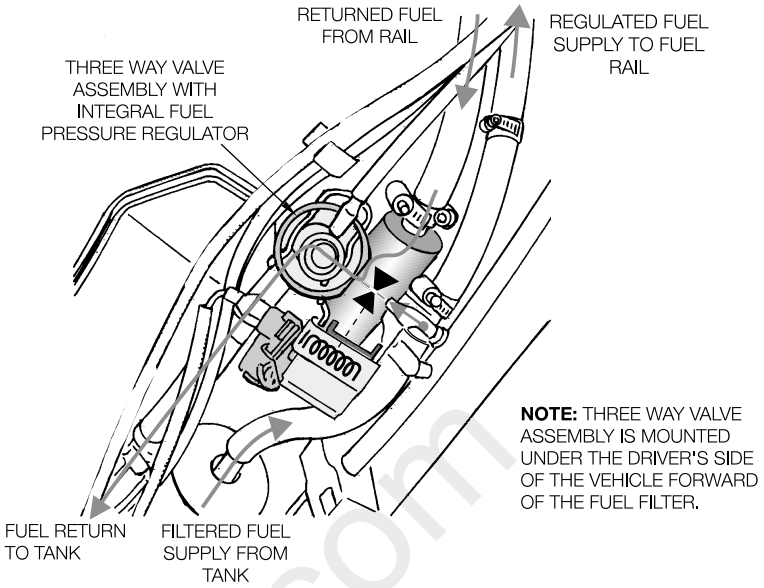


The maintained fuel pressure at the fuel distribution rail is a constat 3.5 Bar.

the vacuum line no longer connects to intake manifold vacuum, but is routed to the crankcase cyclone separator ( in case of regulator diaphragm leakage).

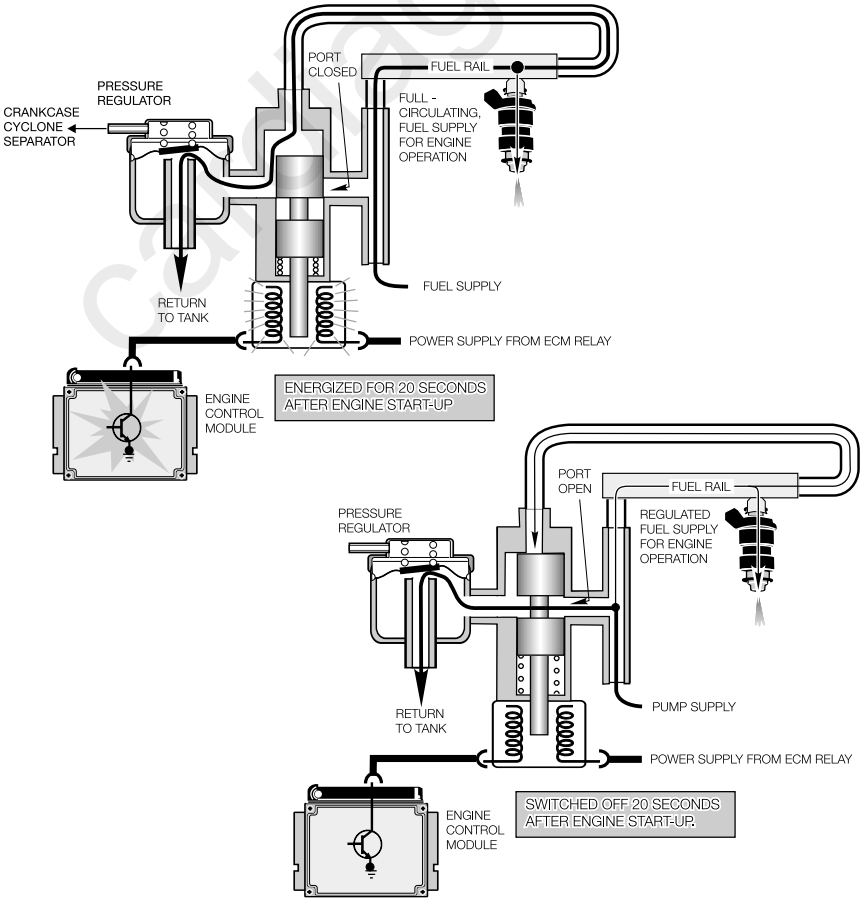

# SECONDARY AIR INJECTION

This ECM controlled function remains unchanged from the previous Siemens MS 41.1 system, however there is a hardware change.

The Air Injection Inlet Valve mounts directly to the cylinder head, with a passageway machined through the head. This eliminates the external Air Injection manifold distribution pipes to the exhaust manifolds.

# SECONDARY AIR INJECTION MONITORING

In order to reduce HC and CO emissions while the engine is warming up, BMW implemented the use of a Secondary Air Injection System. Immediately following a cold engine start (-10 - 40°C) fresh air/oxygen is injected directly into the exhaust manifold. By injecting oxygen into the exhaust manifold:

- The warm up time of the catalyst is reduced
- Oxidation of the hydrocarbons is accelerated

The activation period of the air pump can vary depending on engine type and operating conditions.

Conditions for Secondary Air Pump Activation:

| REQUIREMENTS | STATUS/CONDITION M52 & M44 | STATUS/CONDITION M73 |
|---|---|---|
| Oxygen sensor | Open Loop | Open Loop |
| Oxygen sensor heating | Active | Active |
| Engine coolant temperature | -10 to 40ºC* | -10 to 40ºC* Stage |
| Engine bad | Predefined Range | Predefined Range |
| Engine speed | Predefined Range | Predefined Range |
| Fault Codes | No Secondary Air Faults “currently present” | No Secondary Air Faults “currently present” |

*NOTE: Below -10°C the air injection pump is activated only as a preventive measure to blow out any accumulated water vapor that could freeze in the system.

cardiagn.com

The Secondary Air Injection System is monitored via the use of the pre-catalyst oxygen sensor(s). Once the air pump is active and is air injected into the system the signal at the oxygen sensor will reflect a lean condition. If the oxygen sensor signal does not change within a predefined time a fault will be set and identify the faulty bank(s). If after completing the next cold start and a fault is again present the "Check Engine" light will be illuminated.

Example: Secondary Air Injection Monitoring (Siemens System)

During a cold start condition air is immediately injected into the exhaust manifold and since the oxygen sensors are in open loop at this time the voltage at the pre catalyst sensor will reflect a lean condition) and will remain at this level while the air pump is in operation. Once the pump is deactivated the voltage will change to a rich condition until the system goes into closed loop operation.

System Operation:
The pump draws air through its own air filter and delivers it to both exhaust manifolds through a non-return (shutoff valve). The non-return valve is used to:

1. Control air injection into the exhaust manifold - A vacuum controlled valve will open the passageway for air to be injected once a vacuum is applied.
2. Prevent possible backfires from traveling up the pipes and damaging the air pump when no vacuum is applied.

The control module activates the vacuum vent valve whenever the air pump is energized. Once the vacuum vent valve is energized a vacuum is applied to the non-return valve which allows air to be injected into the exhaust manifold. A vacuum is retained in the lines, by the use of a check valve, in order to allow the non-return valve to be immediately activated on cold engine start up. When the vacuum/vent valve is not energized, the vacuum to the non-return valve is removed and is vented to atmosphere.

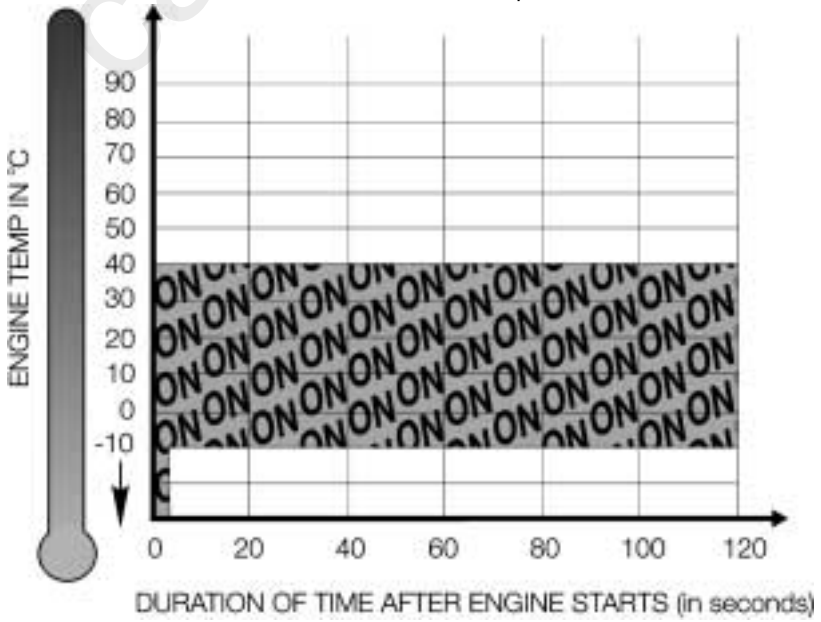

# FUEL INJECTOR VALVES

The fuel injectors which are supplied by Siemens Inject at an angle (dual cone spray pattern). The tip of the injector is fitted with a directional angle "plate" with dual outlets. The lower portion of the injector body is now jacketed in metal. The ECM control of the injectors remains unchanged from the previous Siemens MS41.1 system.

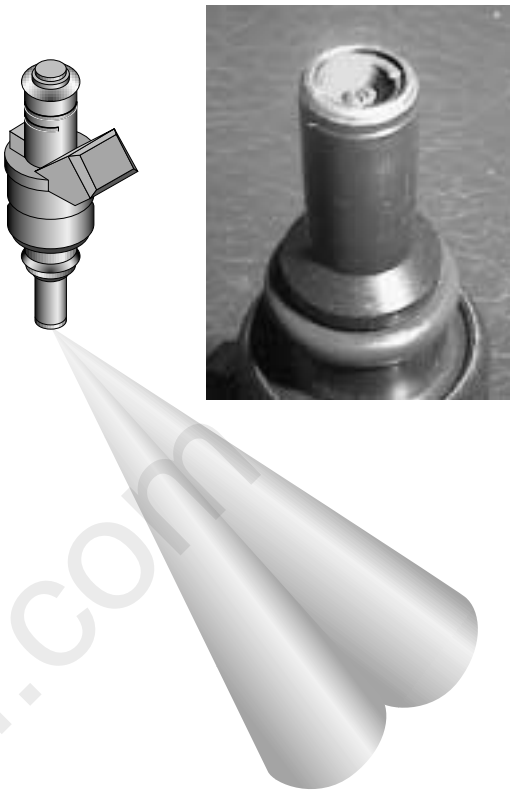

# ENGINE/VEHICLE SPEED LIMITATION

For engine/vehicle speed limitation, the ECM will deactivate injection for individual cylinders, allowing a smoother limitation transition. This prevents over-rev when the engine reaches maximum RPM (under acceleration), and limits top vehicle speed (approx. 128 mph).

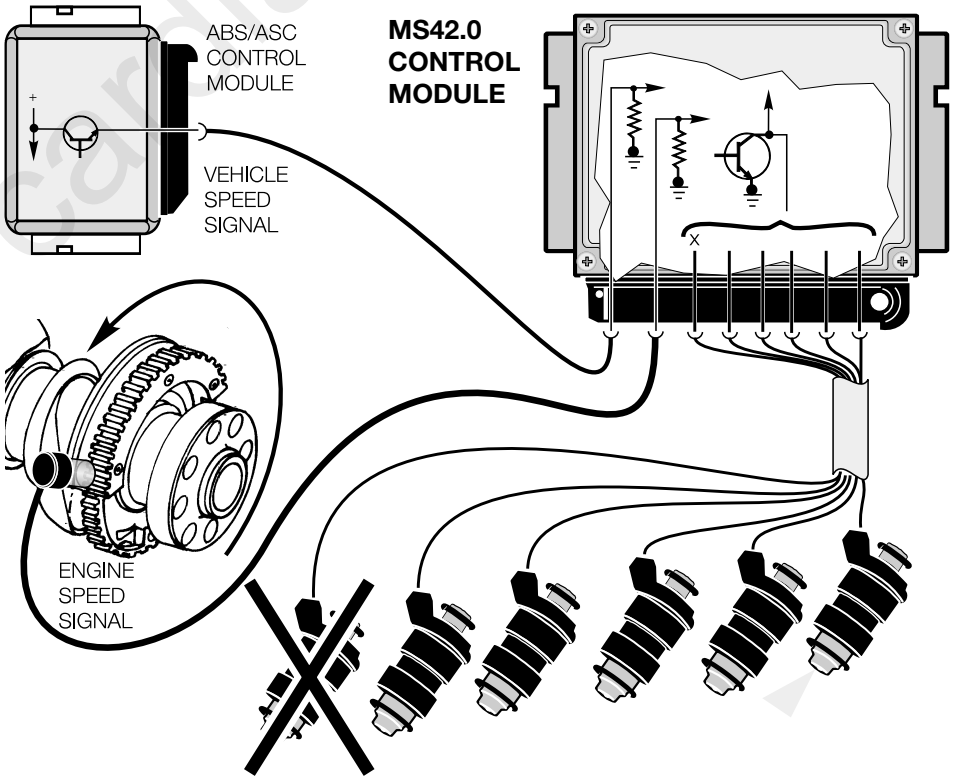


cardiagn.com

# RZV IGNITION SYSTEM

The Siemens MS42.0 system uses a multiple spark ignition function. The purpose of multiple ignition is:

- Provide clean burning during engine start up and while idling (reducing emissions).
- This function helps to keep the spark plugs clean for longer service life (new BMW longlife plugs).

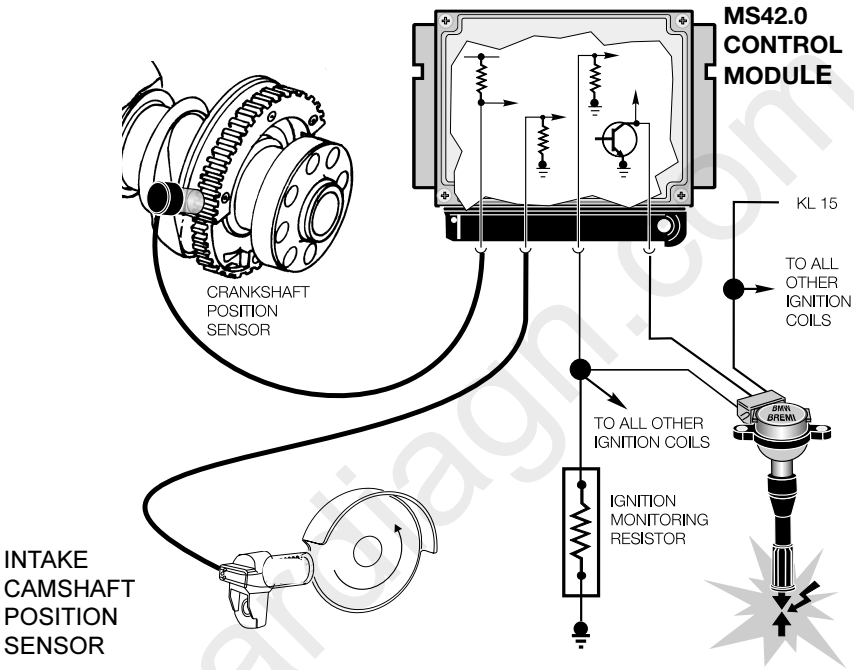


Multiple ignition is active up to an engine speed of approximately 1350 RPM (varied with engine temperature) and up to 20 degrees after TDC.

Multiple ignition is dependent on battery voltage. When the voltage is low, the primary current is also lower and a longer period of time is required to build up the magnetic field in the coil(s).

- Low battery voltage = less multiple ignitions
- High battery voltage = more multiple ignitions

The 240 ohm shunt resistor is still used on the MS42.0 system for detecting secondary ignition faults and diagnostic purposes.

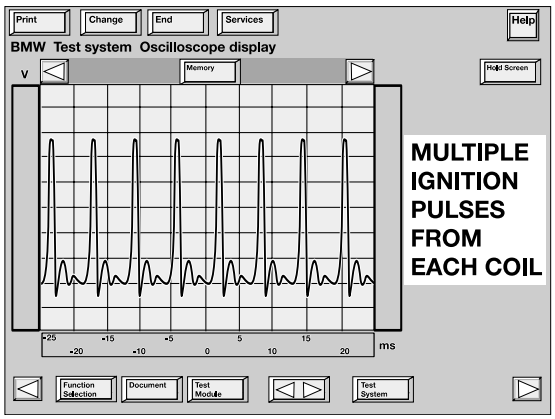


* 1 cylinder shown

# RESONANCE/TURBULENCE INTAKE SYSTEM

On the M52 TU, the intake manifold is split into 2 groups of 3 (runners) which increases low end torque. The intake manifold also has separate (internal) turbulence bores which channels air from the idle speed actuator directly to one intake valve of each cylinder (matching bore of 5.5mm in the cylinder head).

Routing the intake air to only one intake valve causes the intake to swirl in the cylinder. Together with the high flow rate of the intake air due to the small intake cross sections, this results in a reduction in fluctuations and more stable combustion.

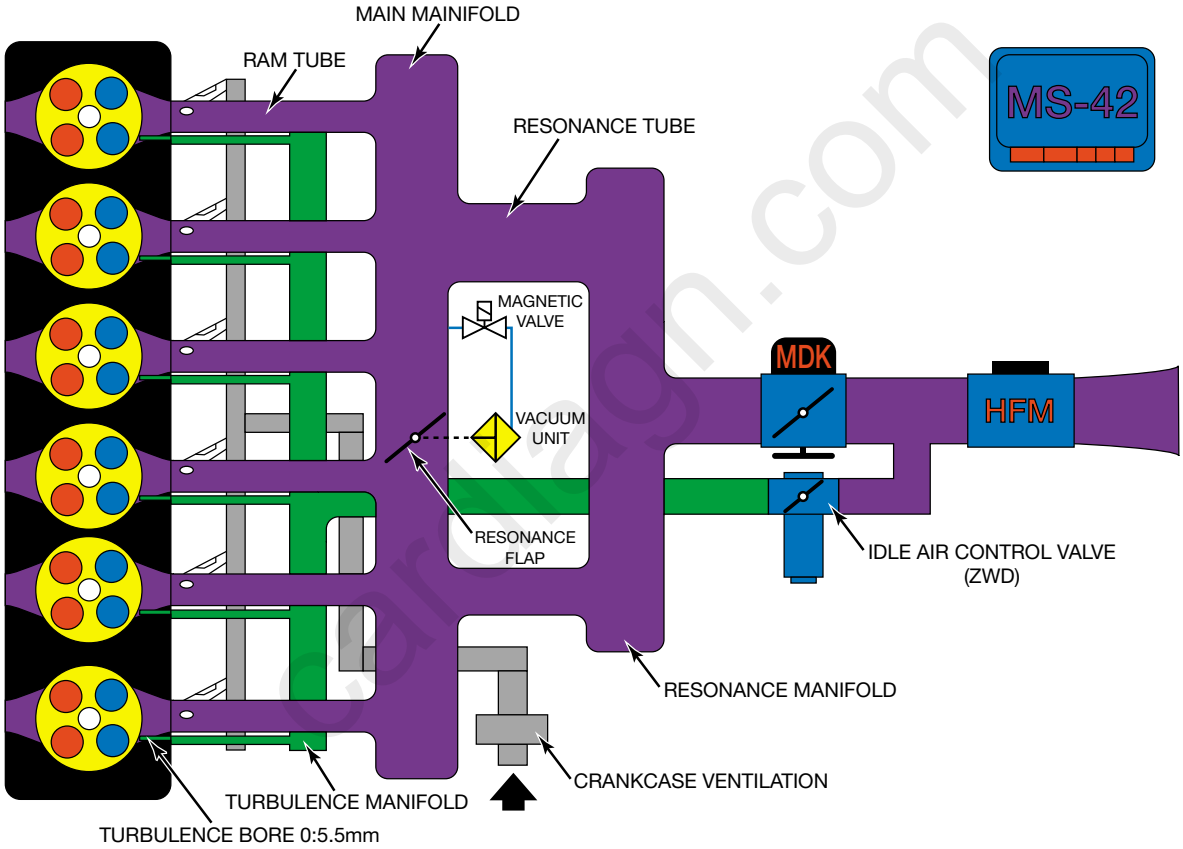


cardiagn.com

## RESONANCE SYSTEM

The resonance system provides increased engine torque at low RPM, as well as additional power at high RPM. Both of these features are obtained by using a resonance flap (in the intake manifold) controlled by the ECM.

During the low to mid range rpm, the resonance flap is closed. This produces a long/single intake tube for velocity, which increases engine torque.

During mid range to high rpm, the resonance flap is open. This allows the intake air to pull through both resonance tubes, providing the air volume necessary for additional power at the upper RPM range.

When the flap is closed , this creates another “dynamic” effect. For example, as the intake air is flowing into cylinder #1, the intake valves will close. This creates a “roadblock” for the in rushing air. The air flow will stop and expand back (resonance wave back pulse) with the in rushing air to cylinder #5. The resonance “wave”, along with the intake velocity, enhances cylinder filling.

The ECM controls a solenoid valve for resonance flap activation. At speeds below 3750 RPM, the solenoid valve is energized and vacuum supplied from an accumulator closes the resonance flap. This channels the intake air through one resonance tube, but increases the intake velocity.

When the engine speed is greater than 4100 RPM (which varies slightly - temperature influenced), the solenoid is de-energized. The resonance flap is sprung open, allowing flow through both resonance tubes, increasing volume.

cardiagn.com

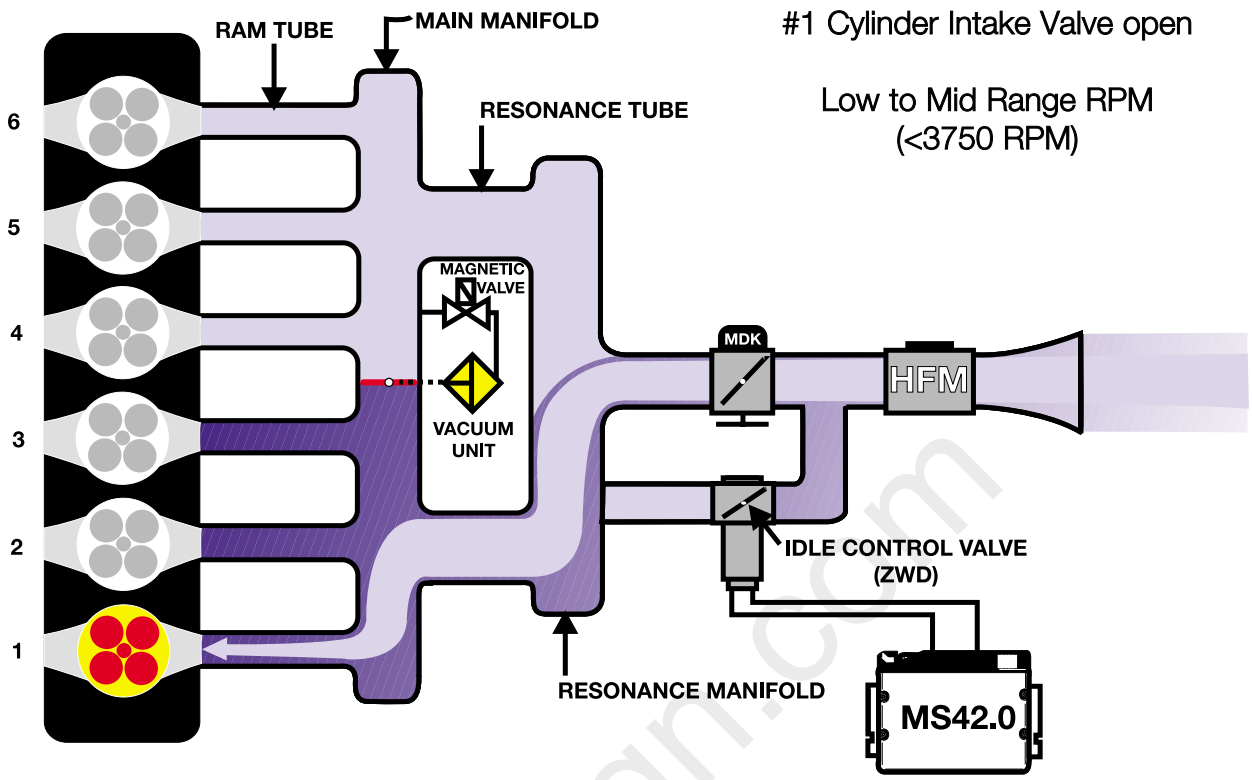


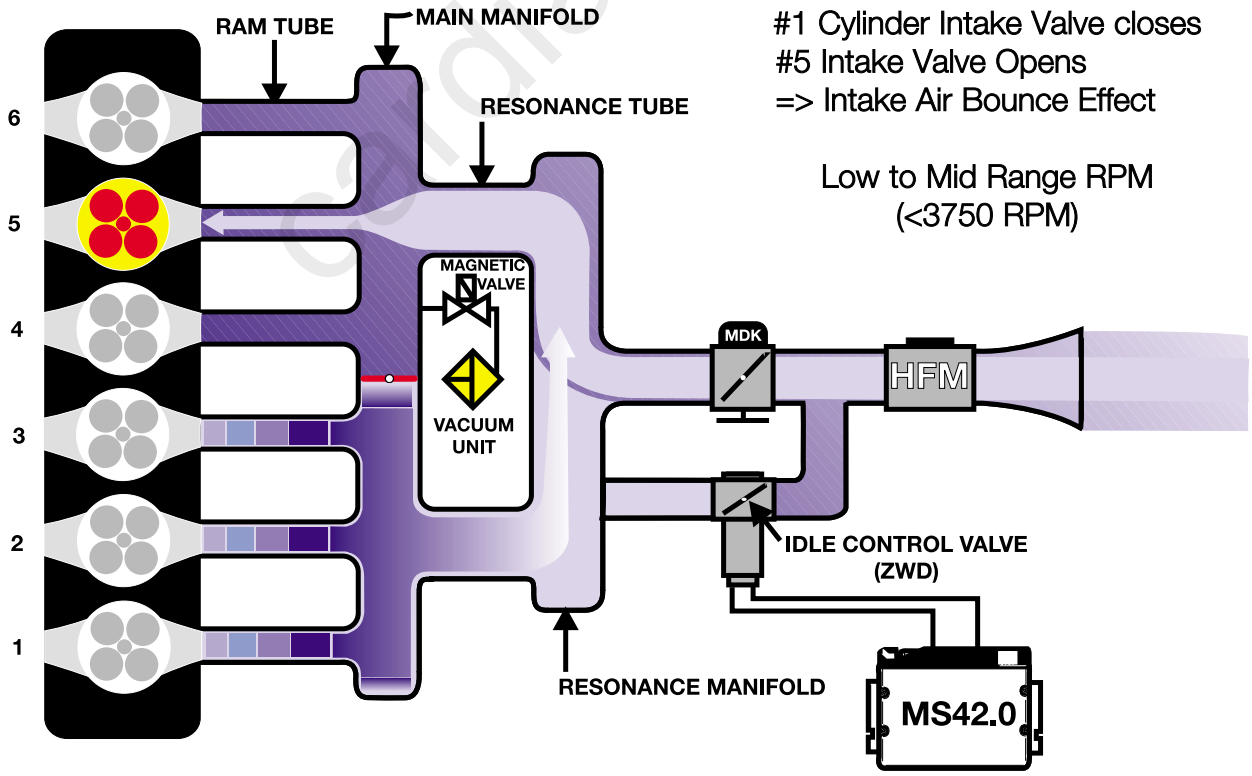


cardiagn.com

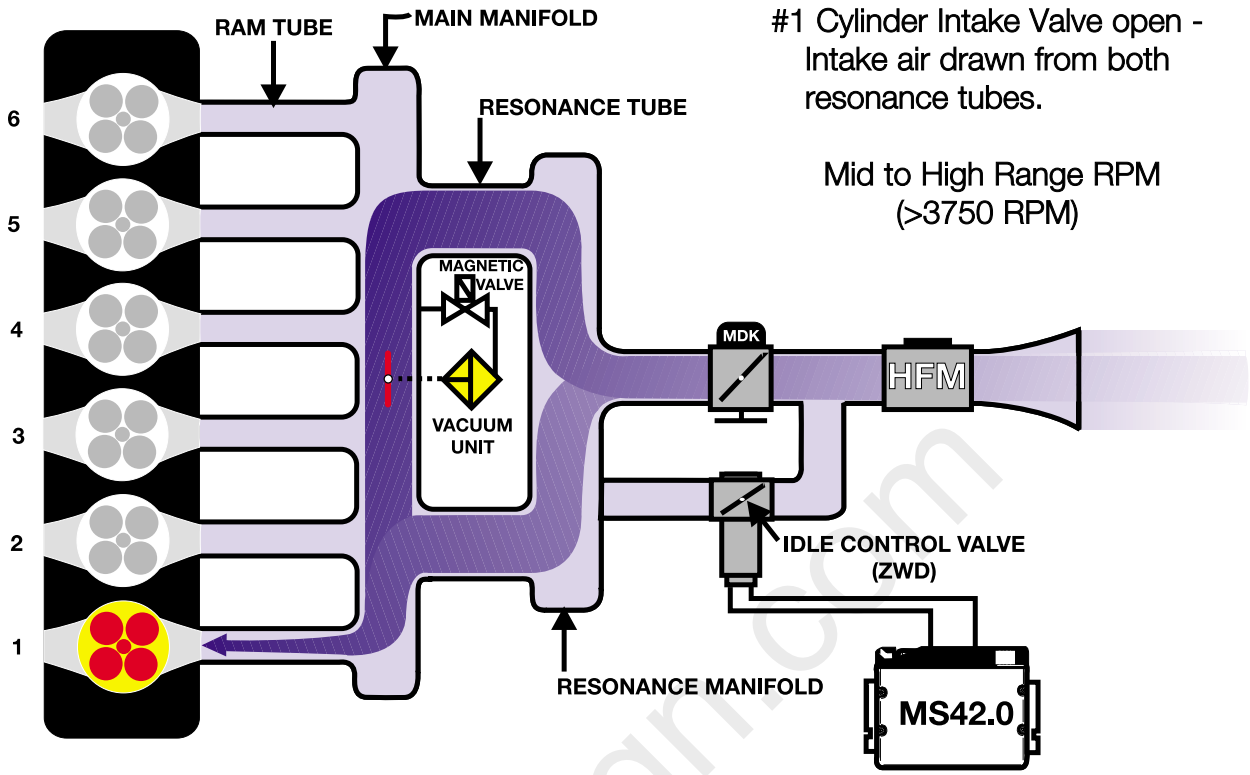


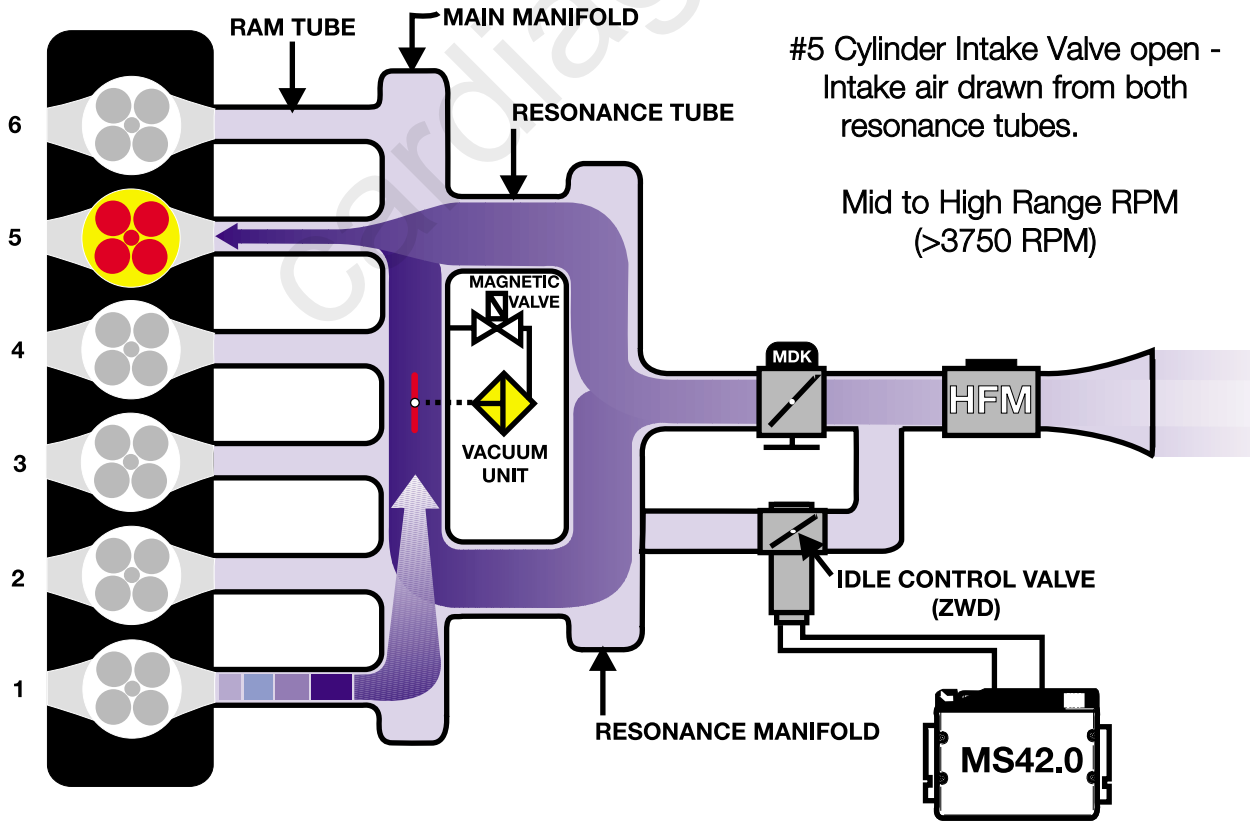


cardiagn.com

# IDLE SPEED CONTROL

The ECM determines idle speed by controlling an idle speed actuator (dual winding rotary actuator) ZWD 5.

The basic functions of the idle speed control are:

- Control the initial air quantity (at air temperatures <0 C, the MDK is simultaneously opened)
- Variable preset idle based on load and inputs
- Monitor RPM feedback for each preset position
- Lower RPM range intake air flow (even while driving)
- Vacuum limitation
- Smooth out the transition from acceleration to deceleration

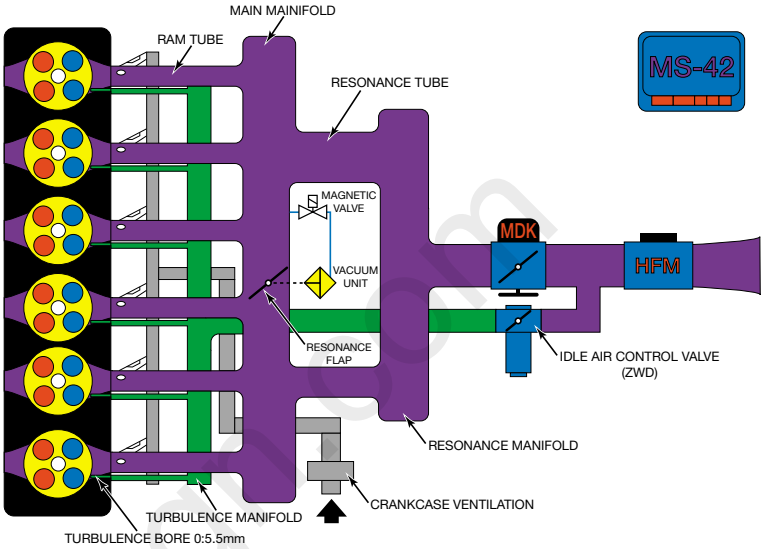


Idle speeds will vary (idle speed stabilization):

- During the warm up phase
- When a drive gear is selected
- At all electric fan speeds
- When Air conditioning is activated
- When heating the passenger compartment
- If nominal RPM is modified (idle speed increase) by DIS service function (if applicable)

Emergency Operation of Idle Speed Actuator:

If a fault is detected with the idle speed actuator, the ECM will initiate fail-safe measures depending on the effect of the fault (increased air flow or decreased air flow).
If there is a fault in the idle speed actuator/circuit, the MDK will compensate to maintain idle speed. The EML lamp will be illuminated to inform the driver of a fault.

If the fault causes increased air flow (actuator failed open), VANOS and Knock Control are deactivated which noticeably reduces engine performance.

cardiag.com

# CRUISE CONTROL

Cruise control is integrated into the ECM because of the MDK operation.

Cruise control functions are activated directly by the multifunction steering wheel to the ECM. The individual buttons are digitally encoded in the MFL switch and is input to the ECM over a serial data wire.

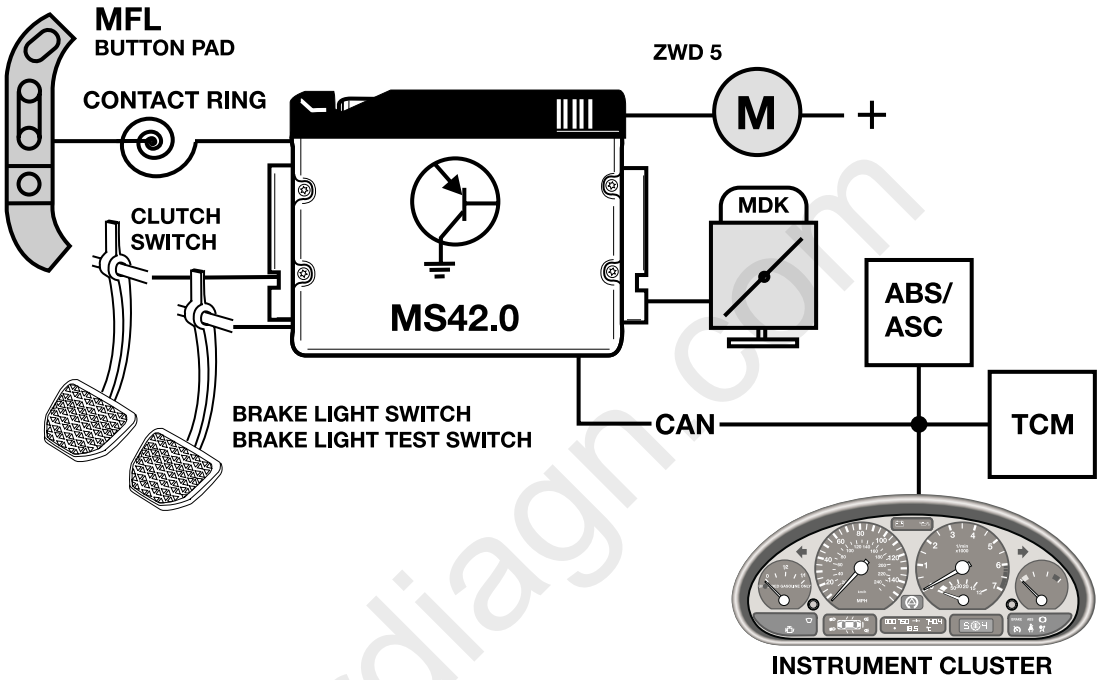


The ECM controls vehicle speed by activation of the Motor Driven Throttle Valve (MDK)

The clutch switch disengages cruise control to prevent over-rev during gear changes.

The brake light switch and the brake light test switch are input to the ECM to disengage cruise control as well as fault recognition during engine operation of the MDK.

Road speed is input to the ECM for cruise control as well as ASC/MSR regulation. The vehicle speed signal for normal engine operation is supplied from the ABS module (right rear wheel speed sensor). The road speed signal for cruise control is supplied from the ABS module. This is an average taken from both front wheel speed sensors, supplied via the CAN bus.

cardiagn.com

# INTAKE (VACUUM) JET PUMP

The intake jet pump function is controlled by the MS42 ECM. The purpose is to provide sufficient vacuum for the brake booster in all operating conditions.

The additional vacuum compensation is activated by the ECM when the idle speed actuator is regulated for:

- A/C compressor "ON"
- Drive gear engaged (if the transmissions in fail-safe, the jet pump will always be operating)
- Engine warm up <70ºC

The ECM controls the Intake Jet Pump by activating the Solenoid Control Valve. Additional Vacuum Enhancement is applied to the brake booster when the control circuit is "deactivated" (solenoid sprung open). Vacuum Enhancement is limited to the brake booster when the control circuit is "activated" (solenoid powered closed).

# PURGE VALVE

The purge valve (TEV) is activated at 10 Hz by the ECM to cycle open, and is sprung closed. The valve is physically different, but purge control functions are the same as the previous Siemens MS41.1 system.

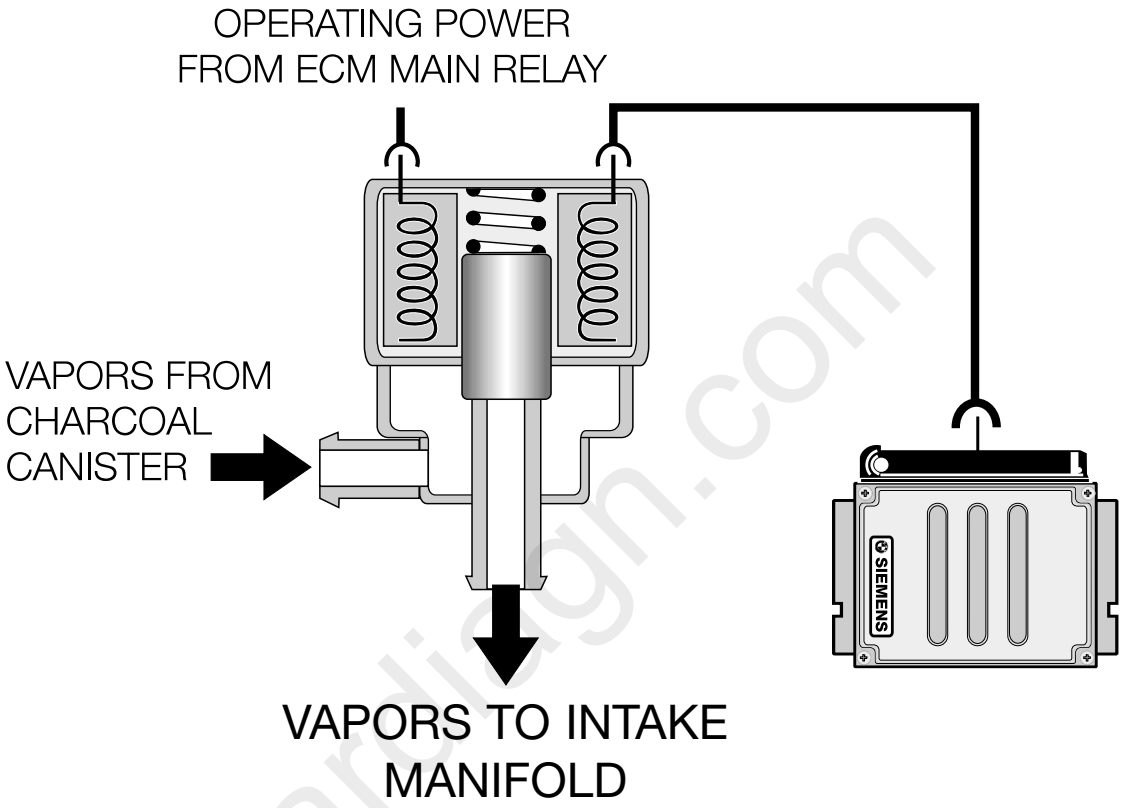


cardiagn.com

# TORQUE INTERFACES

If torque reduction or increase is required for ASC/DSC/MSR/AGS, the ECM will regulate engine power in the following manner:

- If less torque is required, the ignition timing is reduced (fast intervention), the idle speed actuator and MDK reduce intake air.

- If increased torque is required (MSR), the idle speed actuator and MDK increase intake air.

The data required for engine torque manipulation is relayed via the CAN bus.

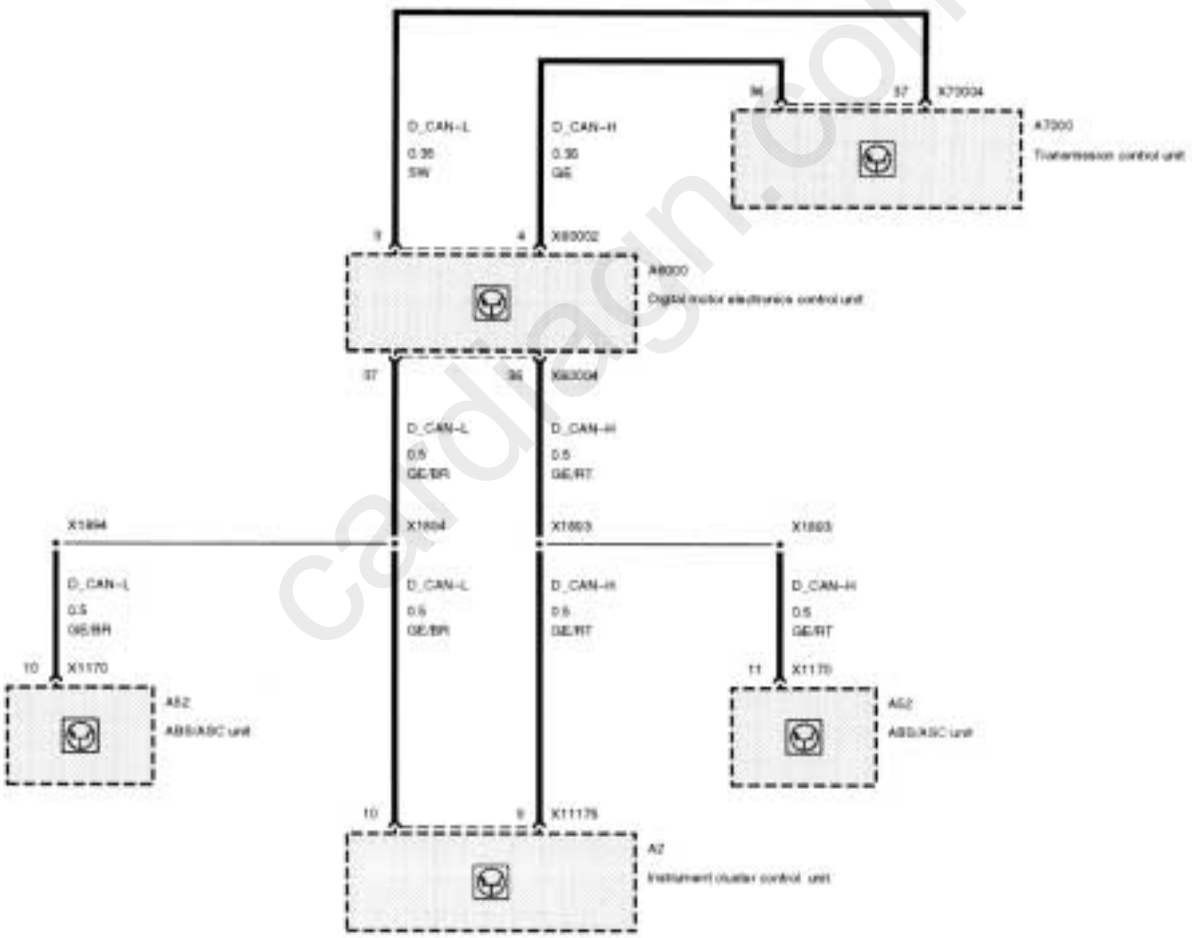


cardiagn.com

# LEAKAGE DIAGNOSIS PUMP (LDP)

The location of the LDP and charcoal canister have changed. This combination assembly is located under the right rear trunk floor.

## EVAPORATIVE FUEL SYSTEM PRESSURE LEAK DIAGNOSIS MS42.0

The LDP is capable of detecting a leak ***as small as 0.5 mm.***

The LDP is a unitized component that contains the following:

- Vacuum chamber
- Pneumatic pump chamber
- DME activated vacuum solenoid
- Reed switch providing a switched voltage feedback signal to the DME

The LDP assembly is only replaceable as a complete unitized component, however, it is separate from the charcoal canister.

* Location - under right rear trunk floor

## LDP OPERATION

During every engine cold start, the following occurs:

- The LDP solenoid is energized by the ECM
- Engine manifold vacuum enters the upper chamber of the LDP to lift up the spring loaded diaphragm pulling ambient air through the filter and into the lower chamber of the LDP through the one way valve.

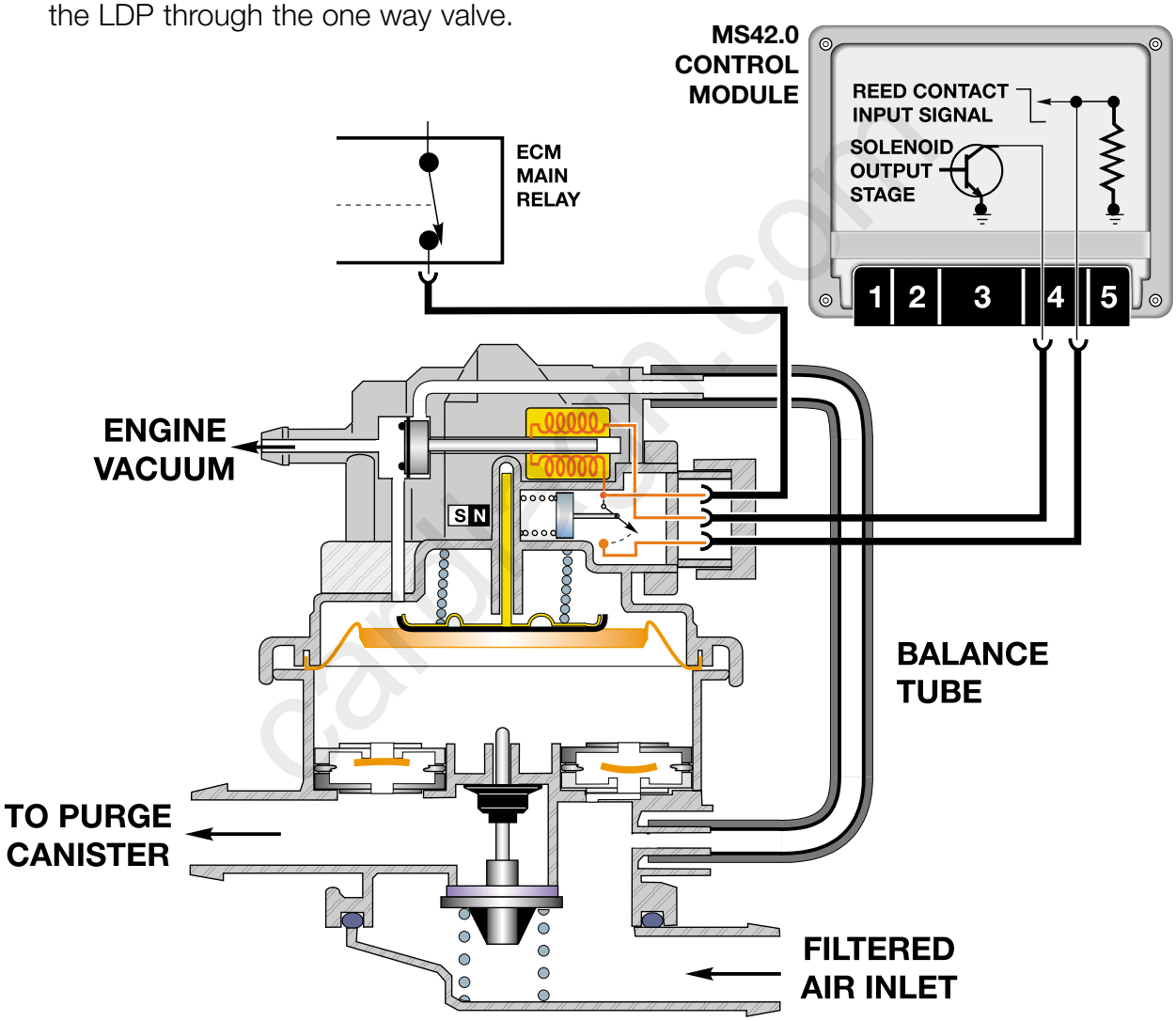


- The solenoid is then de-energized, spring pressure closes the vacuum port blocking the engine vacuum and simultaneously opens the vent port to the balance tube which releases the captive vacuum in the upper chamber.
- This allows the compressed spring to push the diaphragm down, starting the “limited down stroke”.

- The air that was drawn into the lower chamber of the LDP during the upstroke is forced out of the lower chamber and into the evaporative system.

- This electrically controlled repetitive up/down stroke is cycled repeatedly building up a total pressure of approximately +25mb in the evaporative system.

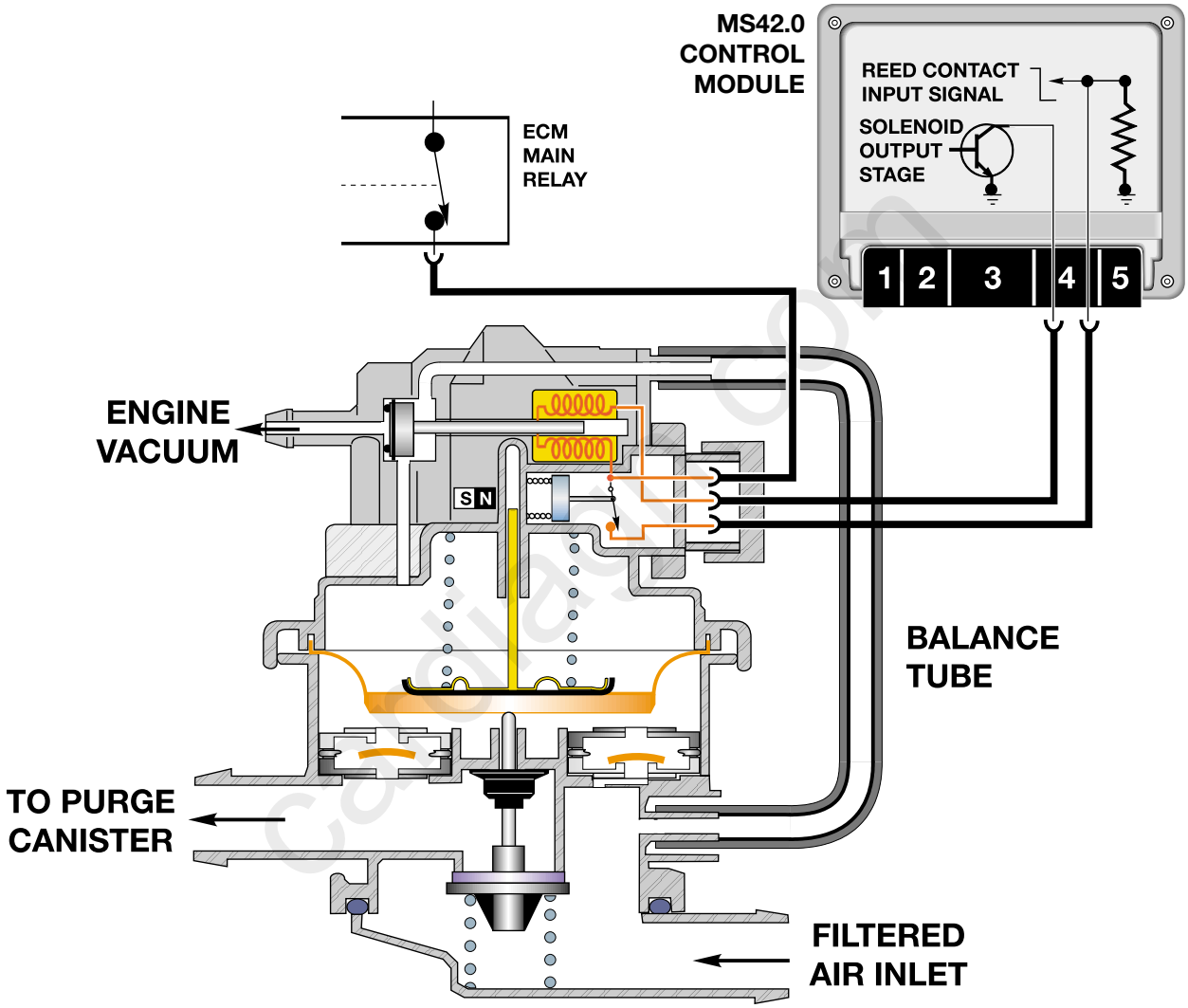


- After sufficient pressure has built up (LDP and its cycling is calibrated to the vehicle), the leak diagnosis begins and lasts about 100 seconds.

- The upper chamber contains an integrated reed switch that produces a switched high-low voltage signal that is monitored by the ECM. The switch is opened by the magnetic interruption of the metal rod connected to the diaphragm when in the diaphragm is in the top dead center position.

- The repetitive up/down stroke is confirmation to the ECM that the valve is functioning.

The ECM also monitors the length of time it takes for the reed switch to open, which is opposed by pressure under the diaphragm in the lower chamber. The LDP is still cycled, but at a frequency that depends upon the rate of pressure loss in the lower chamber.

- If the pumping frequency is below parameters, there is no leak present.
- If the pumping frequency is above parameters, this indicates sufficient pressure can not build up in the lower chamber and evaporative system, indicating a leak.

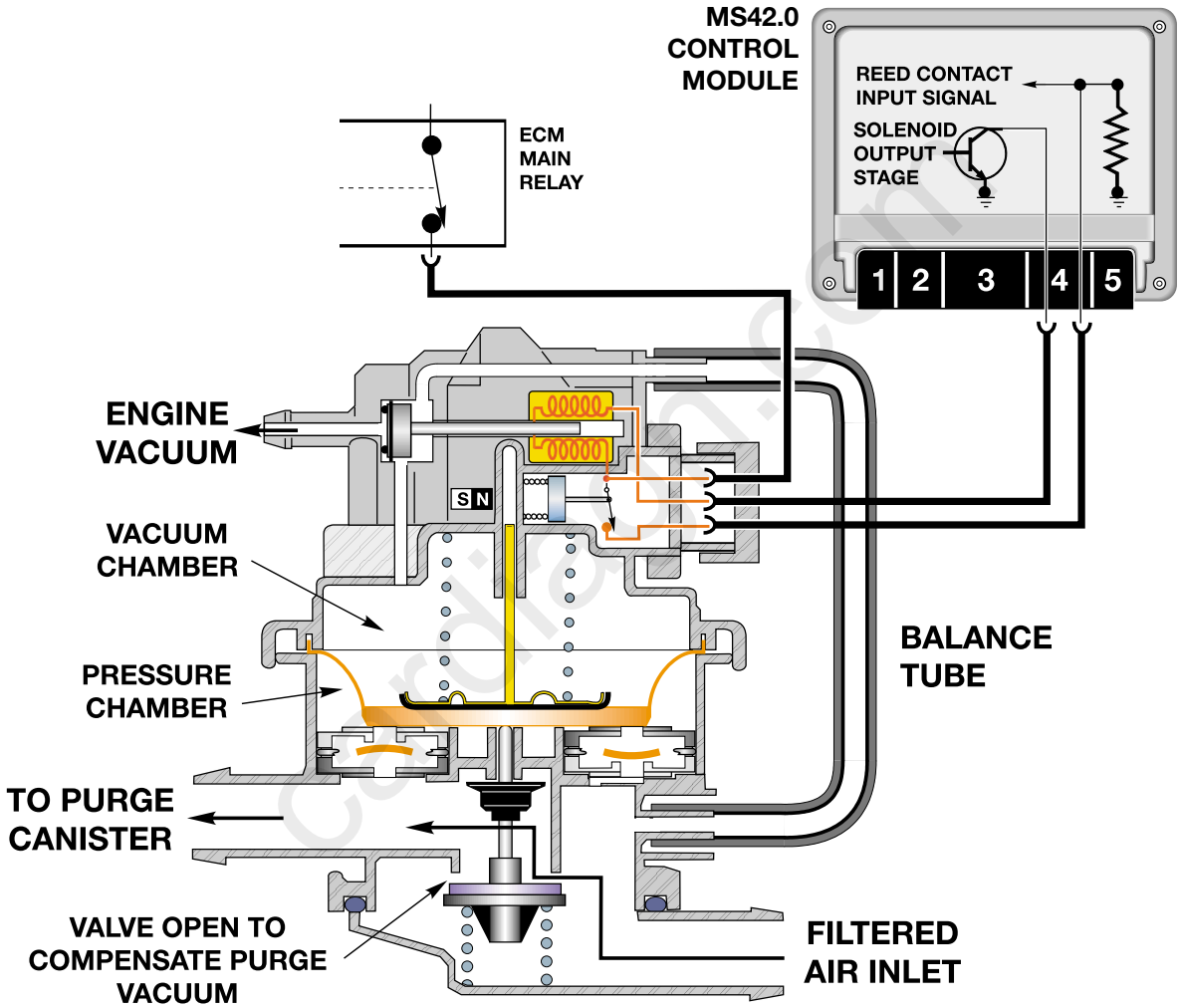


A fault code can be recorded by each ECM indicating an evaporative system leak. Upon test completion, the ECM releases the ground path to the LDP and the internal spring pushes the diaphragm for the “full down stroke”.

At bottom dead center, the diaphragm rod opens the canister vent valve. This allows for fresh air intake from the filter for normal purge system operation.

The LDP is diagnosable with the DIS including a service function activation test.

The chart represents the diagnostic leak testing time frame in seconds. When the ignition is switched on, the ECM performs a “static check” of circuit integrity to the LDP pump including the reed switch.

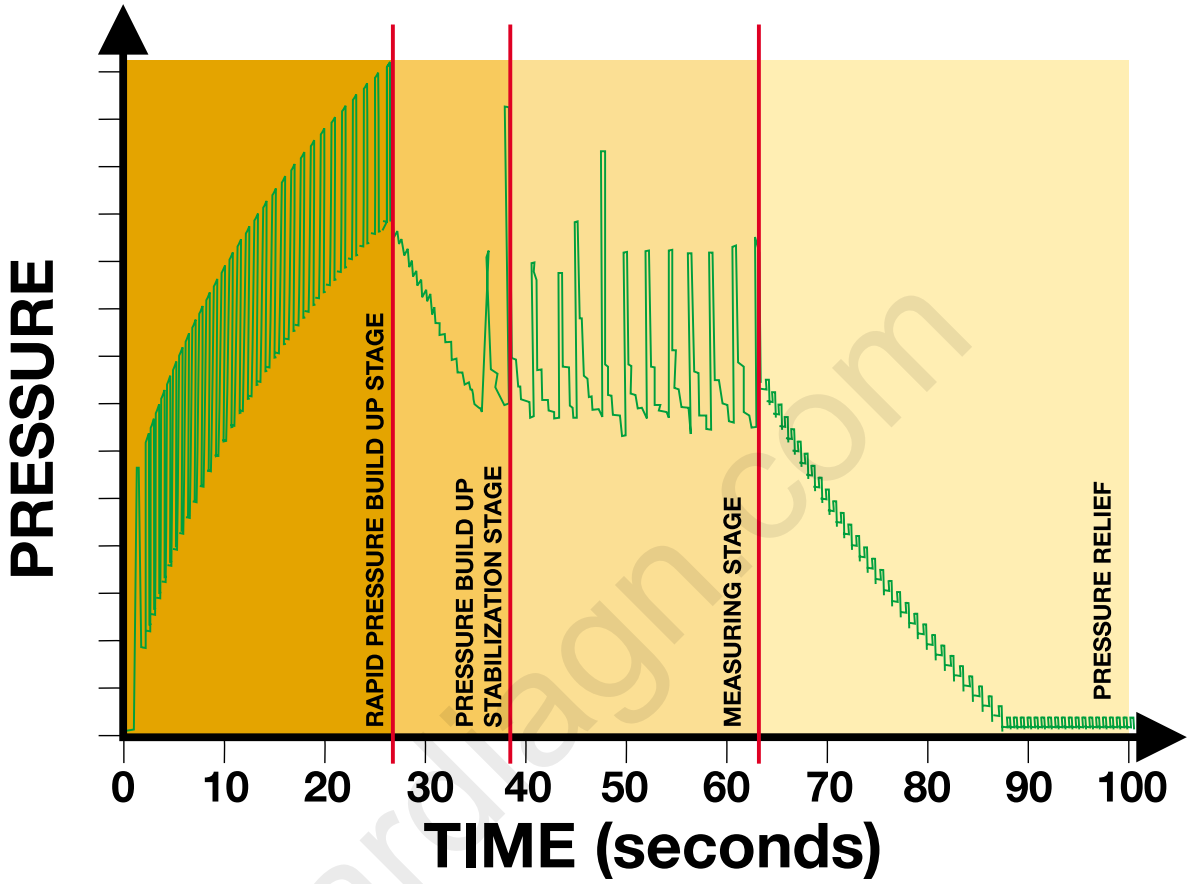


- On cold engine start up, the pump is activated for the first 27 seconds at approximately 1.6 - 2.0 Hz. This pumping phase is required to pressurize the evaporative components.

- Once pressurized, the build up phase then continues from 27-38 seconds. The ECM monitors the system through the reed switch to verify that pressure has stabilized.

- The measuring phase for leak diagnosis lasts from 38-63 seconds. The pump is activated but due to the pressure build up under the diaphragm, the pump moves slower. If the pump moves quickly, this indicates a lack of pressure or a leak. This registers as a fault in the ECM’s.

- From 63-100 seconds the pump is deactivated, allowing full down stroke of the diaphragm and rod. At the extreme bottom of rod travel, the canister vent valve is pushed open relieving pressure and allowing normal purge operation when needed.

# MOTOR DRIVEN THROTTLE VALVE

The MDK control function has been integrated into the ECM. The purpose is for precision throttle operation, OBD II compliant for fault monitoring, ASC/MSR control, and cruise control. This integration reduces extra control modules, wiring, and sensors.

The MDK control function is integrated into the Siemens MS42.0 ECM. The ECM carries this function out by regulating the engine throttle valve.

The engine throttle valve performs the following functions:

- Precision intake air control
- ASC control
- MSR control
- Cruise control
- Preset position during engine start up (if temperature is < 0ºC)

The new engine throttle valve (MDK) differs from the familiar EML in the following points:

- The accelerator pedal potentiometer (PWG) is now integrated in the MDK housing.
- A throttle cable is used to actuate the throttle potentiometers and also serves as a back-up to open the throttle plate (full control) if the MDK system is in fail-safe.

cardiagn.com

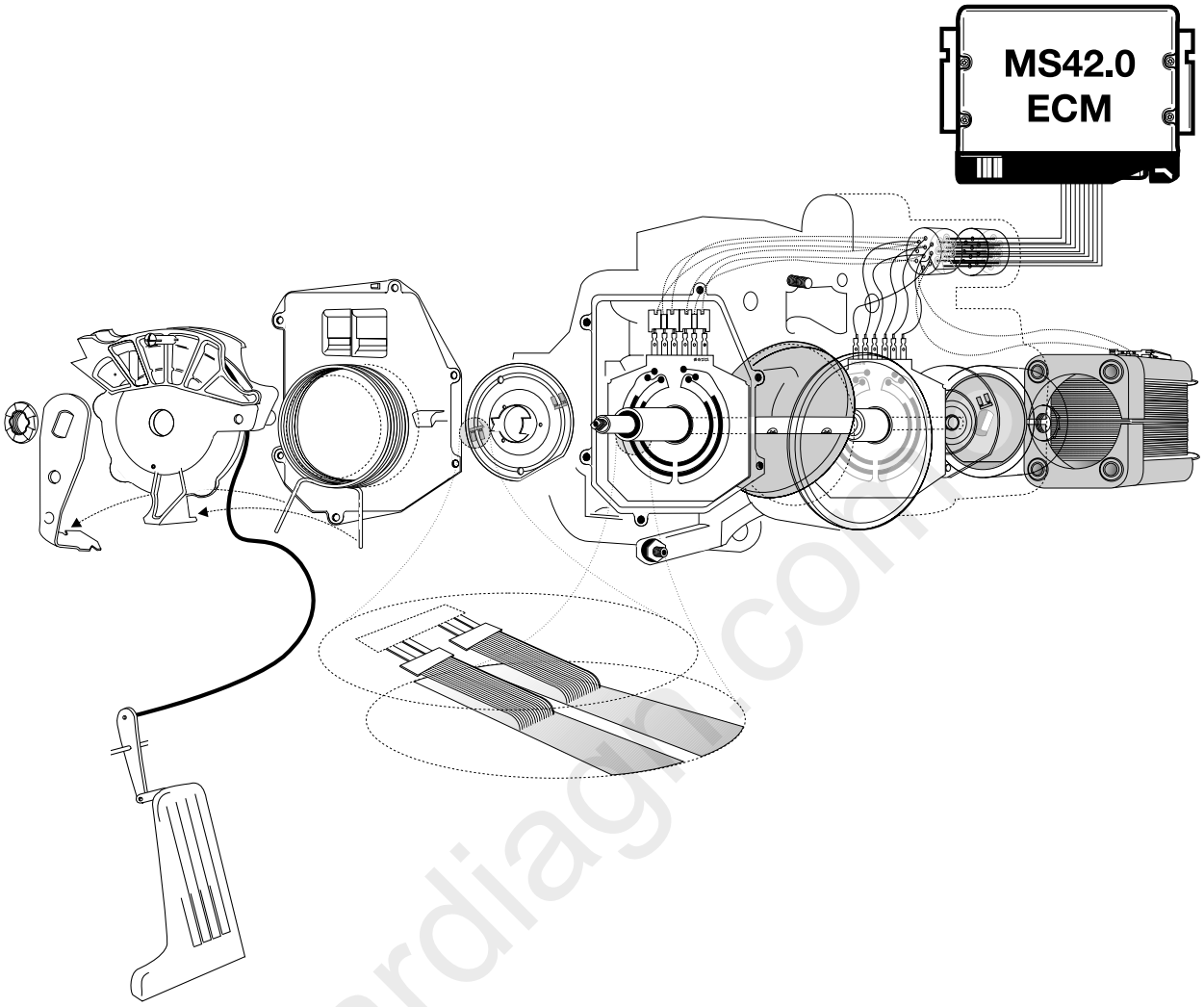


The throttle cable (foot pedal controlled) is connected to a pulley on the side of the MDK/ The pulley is linked by springs to one end of the throttle shaft, the MDK electric motor is attached to the other end of the throttle shaft.

With the pulley linked by springs to the throttle shaft, this allows ASC intervention to override the driver's set throttle position.

As the pulley and shaft are rotated, the twin potentiometers (integral in the MDK housing, driver's wish) are sensing the requested load. A twin potentiometer is used for back up redundancy (fail-safe).

The MS42.0 ECM will actuate the MDK motor pulse width modulated in both directions at a basic frequency of 600 Hz) which positions the throttle plate.

The second twin potentiometers feedback the actual throttle plate position, allowing the ECM to verify correct throttle position. Again, twin potentiometers are used for back up

## MDK EMERGENCY OPERATION

If a fault is detected in the system, the following modes of operation are:

- Emergency operation 1 - Faults which do not impair safety, but which adversely affect the functioning of the MDK.
- Emergency operation 2 - Applies when faults are encountered which might impair safe driving operation.
- Emergency operation of idle speed actuator.

## EMERGENCY OPERATION 1

- Activation of the EML warning lamp.
- MDK is deactivated, the throttle valve is opened mechanically by the springs and throttle cable.
- To maintain vehicle control, the MDK opening is compensated for by closing the idle speed actuator and retarding the ignition (engine power reduction).
- Engine power is further limited by fuel injector cutout.

Emergency operation 1 limits the dynamic operation if one or more of the potentiometers fail. The engine can slowly reach maximum speed with limited power. The EML light will be illuminated to alert the driver of a fault.

cardiagn.com

## EMERGENCY OPERATION 2

If another fault is encountered in addition to emergency operation 1 or if the plausibility is affected, emergency operation 2 is activated by the ECM.

An example of plausibility fault would be that the pulley position does not match the MDK position and the associated airflow.

Emergency operation 2 can also be initiated by simultaneously pressing both the accelerator pedal and the brake pedal, or if a fault is encountered in the brake light switch diagnosis.

When in emergency 2 operation mode, there is an engine speed limitation (slightly above idle speed) in addition to the measures for emergency operation 1.

In emergency operation 2, the engine speed is always limited to 1300 RPM if the brake is not applied, and approximately 1000 RPM if the brake is applied.

The vehicle speed is limited to approximately 20-25 mph. The reason for limiting the vehicle speed is if the MDK is wide open, the vacuum assist is insufficient for the brakes.

The emergency operation functions are inactive when:

- Ignition is switched off, main relay is deactivated, and engine is started again
- A fault is not detected
- Brake pedal is not depressed
- The throttle valve is in the idle speed setting

## FURTHER SAFETY CONCEPTS

The MDK safety concept can detect a jammed or binding throttle valve as well as a broken link spring. This fault is detected by the ECM monitoring the feedback potentiometers from the MDK in relation to the pulse width modulation to activate the MDK motor.

Emergency operation functions if the throttle valve is jammed:

- Engine speed limitation depending on driver's wish potentiometers and the MDK position.
- Limited vehicle speed if MDK is wide open.
- The ECM will alternate between 0 - 100% sensing ratio to "shake" the MDK loose.

In the event of a fault, the DIS or MODIC must be used to interrogate the fault memory, and clear the fault once the proper repair has been performed.

cardiagn.com

# INTAKE AIR FLOW CONTROL

Under certain engine parameters, the MDK throttle control and the idle speed actuator (ZWD) are operated simultaneously.

The ECM detects the driver's wish from the twin potentiometers monitoring the cable/pulley position.

This value is added to the idle speed control value and the total is what the ECM uses for MDK activation. The ECM then controls the idle speed actuator to satisfy the idle air "fill", in addition, the MDK will also be activated = pre-control idle air charge. Both of these functions are utilized to maintain idle RPM.

The MDK is electrically held at the idle speed position, and all of the intake air is drawn through the idle speed actuator. Without a load placed on the engine (<15% load), the MDK will not open until the extreme upper RPM range.

If the engine is under load (>15%), the idle speed actuator is open and the MDK will also open.

In the upper PWG range (approximately >60%), the MDK is switched off. The throttle valve is opened wider exclusively by the pulley via the spring linkage.

At the full throttle position, "kickdown" is obtained by depressing the accelerator pedal fully. This will overwind the pulley, but the spring linkage will not move the throttle plate past 90 degrees of rotation.

NOTE: If the MDK is defective, it is replaced as a unit and is not internally serviceable.

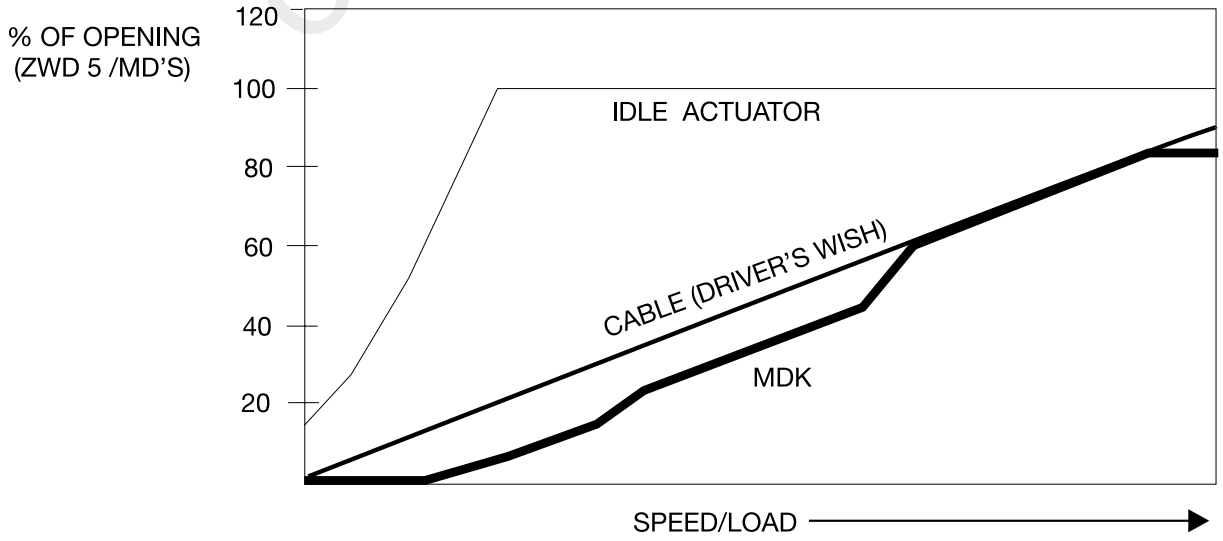


cardiagn.com

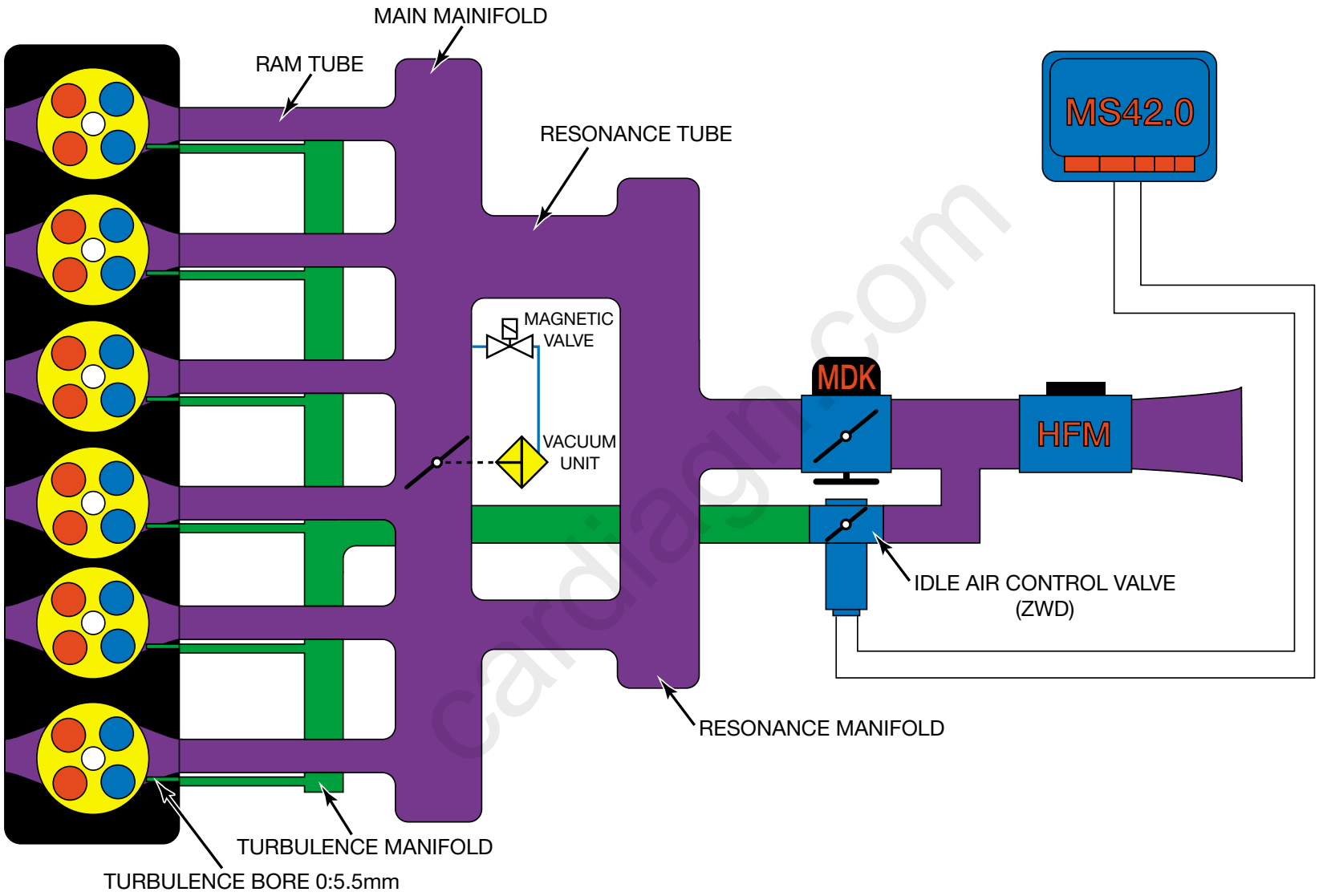


cardiagn.com