Foreword

Welcome to the growing group of value–conscious people who drive Scions. We are proud of the advanced engineering and quality construction of each vehicle we build.

This Owner's Manual explains the operation of your new Scion. Please read it thoroughly and have all the occupants follow the instructions carefully. Doing so will help you enjoy many years of safe and trouble–free motoring. For important information about this manual and your Scion, read the following pages carefully.

When it comes to service, remember that your Scion dealer knows your vehicle very well and is interested in your complete satisfaction. Your Scion dealer will provide quality maintenance and any other assistance you may require.

If there is not a Scion dealer near you, please call the following number:

U.S. OWNERS

- When traveling in the U.S. mainland:
  Scion Customer Experience **Toll–free:1–866–70–SCION or 1–866–707–2466**
- Hawaii:
  Servco Automotive Customer Services **Toll–free:1–888–272–5515**

Please leave this Owner's Manual in this vehicle at the time of resale. The next owner will need this information also.

All information and specifications in this manual are current at the time of printing. However, because of Scion's policy of continual product improvement, we reserve the right to make changes at any time without notice.

Please note that this manual applies to all models and explains all equipment, including options. Therefore, you may find some explanations for equipment not installed on your vehicle.

Please access our websites for further information.

- The U.S. mainland **www.scion.com**
- Hawaii **www.scionhawaii.com**

TOYOTA MOTOR CORPORATION

© 2009 TOYOTA MOTOR CORPORATION
All rights reserved. This material may not be reproduced or copied, in whole or in part, without the written permission of Toyota Motor Corporation.

Important information about this manual

Safety and vehicle damage warnings

Throughout this manual, you will see safety and vehicle damage warnings. You must follow these warnings carefully to avoid possible injury or damage.

The types of warnings, what they look like, and how they are used in this manual are explained as follows:

⚠ CAUTION

This is a warning against anything which may cause injury to people if the warning is ignored. You are informed about what you must or must not do in order to reduce the risk of injury to yourself and others.

NOTICE

This is a warning against anything which may cause damage to the vehicle or its equipment if the warning is ignored. You are informed about what you must or must not do in order to avoid or reduce the risk of damage to your vehicle and its equipment.

Safety symbol

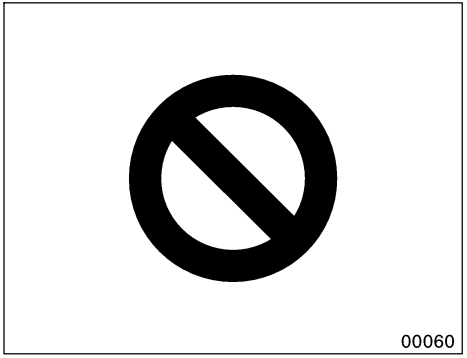

When you see the safety symbol shown above, it means: “Do not...”; “Do not do this”; or “Do not let this happen”.

Important information about your Scion

Occupant restraint systems

Scion encourages you and your family to take the time to read Section 1–3 of this Owner's Manual carefully. In terms of helping you understand how you can receive the maximum benefit of the occupant restraint systems this vehicle provides, Section 1–3 of this Owner's Manual is the most important section for you and your family to read.

Section 1–3 describes the function and operation concerning seats, seat belts, SRS airbags and child restraint systems of this vehicle and some potential hazards you should be aware of. These systems work together along with the overall structure of this vehicle in order to provide occupant restraint in the event of a crash. The effect of each system is enhanced when it is used properly and together with other systems. No single occupant restraint system can, by itself, provide you or your family with the equal level of restraint which these systems can provide when used together. That is why it is important for you and your family to understand the purpose and proper use of each of these systems and how they relate to each other.

The purpose of all occupant restraint systems is to help reduce the possibility of death or serious injury in the event of a collision. None of these systems, either individually or together, can ensure that there is no injury in the event of collision. However, the more you know about these systems and how to use them properly, the greater your chances become of surviving an accident without death or serious injury.

Seat belts provide the primary restraint to all occupants of the vehicle, and every occupant of the vehicle should wear seat belts properly at all times. Children should always be secured in child restraint systems that are appropriate for their age and size. SRS (Supplemental Restraint System) airbags are, as their names imply, designed to work with, and be supplemental to, seat belts and are not substitutes for them. SRS airbags can be very effective in reducing the risk of head and chest injuries by preventing contact of the head and chest with interior portions of the vehicle.

In order to be effective, the SRS airbags must deploy with tremendous speed. The rapid deployment of the SRS airbags makes the SRS airbags themselves potential sources of death or serious injury if an occupant is too close to an airbag, or if an object or some part of his or her body has been placed between the occupant and the airbag at the time of deployment. This is just one example of how the instructions in Section 1–3 of this Owner's Manual will help ensure proper use of the occupant restraint systems, and increase the safety they can provide to you and your family in the event of an accident.

Scion recommends you to read the provisions in Section 1–3 carefully and refer to them as needed during your time of ownership of this vehicle.

Event data recorder

Your vehicle has computers that monitor and control certain aspects of your vehicle. These computers assist in driving and maintaining optimal vehicle performance. Besides storing data useful for troubleshooting, there is a system to record data in a crash or a near car crash event. This is called an Event Data Recorder (EDR).

The SRS airbag sensor assembly contains the EDR. In a crash or a near car crash event, this device may record some or all of the following information:

- Engine speed
- Whether the brake pedal was applied or not
- Vehicle speed
- To what extent the accelerator pedal was depressed
- Position of the transmission shift lever
- Whether the driver and front passenger wore the seat belts or not
- Driver's seat position
- Front passenger's occupant classification

- SRS airbag deployment data
- SRS airbag system diagnostic data

The information above is intended to be used for the purpose of improving vehicle safety performance. Unlike general data recorders, the EDR does not record sound data such as conversation between passengers.

Scion will not disclose the data recorded in an EDR to a third party except when:

- An agreement from the vehicle's owner (or the leasing company for a leased vehicle) is obtained
- Officially requested by the police or other authorities
- Used as a defence for Scion in a law suit
- Ordered by the court

However, if necessary Scion will:

- Use the data for research on Scion vehicle safety performance
- Disclose the data to a third party for research purposes without disclosing details of the vehicle owner, and only when it is deemed necessary
- Disclose summarized data cleared of vehicle identification information to a non–Scion organization for research purposes

New vehicle warranty

Your new vehicle is covered by the following Scion limited warranties:

- New vehicle warranty
- Emission control systems warranty
- Others

For further information, please refer to the "Owner's Warranty Information Booklet" or "Owner's Manual Supplement".

Your responsibility for maintenance

It is the owner's responsibility to make sure the specified maintenance is performed. Section 6 gives details of these maintenance requirements. Also included in Section 6 is general maintenance. For scheduled maintenance information, please refer to the "Scheduled Maintenance Guide" or "Owner's Manual Supplement".

Important health and safety information about your Scion

⚠ CAUTION

- **WARNING: Engine exhaust, some of its constituents, and a wide variety of automobile components contain or emit chemicals known to the State of California to cause cancer and birth defects and other reproductive harm. In addition, oils, fuels and fluids contained in vehicles as well as waste produced by component wear contain or emit chemicals known to the State of California to cause cancer and birth defects or other reproductive harm.**
- **Battery posts, terminals and related accessories contain lead and lead compounds. Wash your hands after handling. Used engine oil contains chemicals that have caused cancer in laboratory animals. Always protect your skin by washing thoroughly with soap and water.**

Accessories, spare parts and modification of your Scion

A wide variety of non–genuine spare parts and accessories for Scion vehicles are currently available in the market. You should know that Scion does not warrant these products and is not responsible for their performance, repair, or replacement, or for any damage they may cause to, or adverse effect they may have on, your Scion vehicle.

This vehicle should not be modified with non–genuine Scion products. Modification with non–genuine Scion products could affect its performance, safety or durability, and may even violate governmental regulations. In addition, damage or performance problems resulting from the modification may not be covered under warranty.

Installation of a mobile two–way radio system

As the installation of a mobile two–way radio system in your vehicle could affect electronic systems such as multiport fuel injection system/sequential multiport fuel injection system, cruise control system, anti–lock brake system, SRS airbag system and seat belt pretensioner system, be sure to check with your Scion dealer for precautionary measures or special instructions regarding installation.

Tires and loading on your Scion

Underinflated or overinflated tire inflation pressure and the excess load may result in the deterioration of steering ability and braking ability, leading to an accident. Check the tire inflation pressure periodically and be sure to keep the load limits given in this Owner's Manual. For details about tire inflation pressure and load limits, see page 241 and page 178.

Scrapping of your Scion

The SRS airbag and seat belt pretensioner devices in your Scion contain explosive chemicals. If the vehicle is scrapped with the airbags and seat belt pretensioners left as they are, this may cause an accident such as a fire. Be sure to have the systems of the SRS airbag and seat belt pretensioner removed and disposed of by a qualified service shop or by your Scion dealer before you scrap your vehicle.

Leak detection pump

This pump performs fuel evaporation leakage check. This check is done approximately five hours after the engine is turned off. So you may hear a sound coming from underneath the luggage compartment for several minutes. It does not indicate a malfunction.

Perchlorate Material

Special handling may apply,
See www.dtsc.ca.gov/hazardouswaste/perchlorate.

Your vehicle has components that may contain perchlorate. These components may include airbag, seat belt pretensioners, and wireless remote control batteries.

SECTION 1 – 1

OPERATION OF INSTRUMENTS AND CONTROLS

Overview of instruments and controls

Instrument panel overview 2
Instrument cluster overview 4
Indicator symbols on the instrument cluster 5

Instrument panel overview

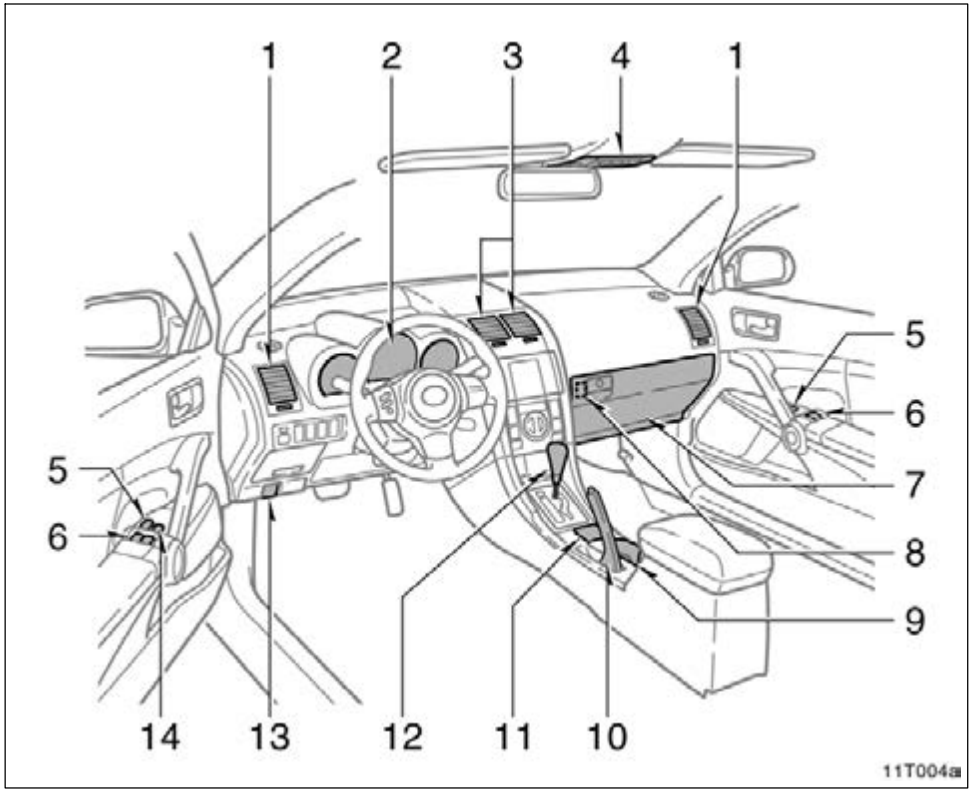

1. Side vent 137
2. Instrument cluster 4
3. Center vents 137
4. Panorama moonroof switch, interior light and personal light 26, 96, 98
5. Power door lock switch 17
6. Power window switches 18
7. Glove box 145
8. Tire pressure warning reset switch 125
9. Cup holders 147
10. Parking brake lever 127
11. Auxiliary box 146
12. Automatic transmission shift lever or manual transmission gear shift lever 117, 120
13. Hood lock release lever 23
14. Window lock switch 18

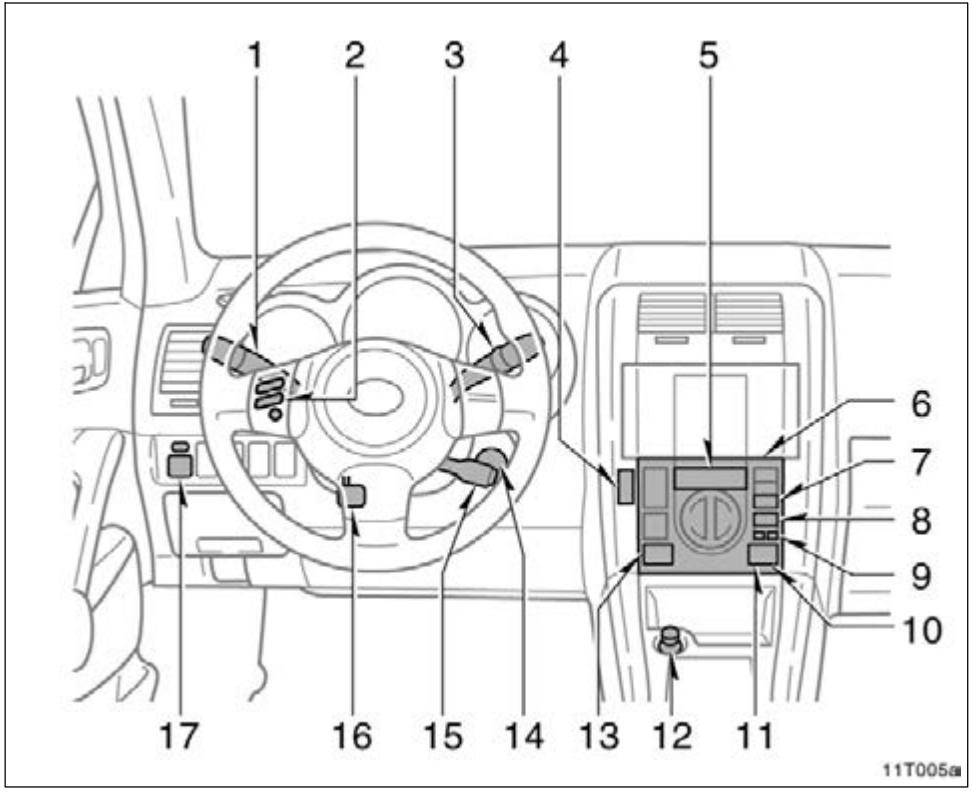

1. Headlight and turn signal switches 94
2. Audio remote controls (steering switches) 143
3. Wiper and washer switches 98
4. Emergency flasher switch 95
5. Clock, air conditioning and outside temperature display 132, 142
6. Air conditioning controls 132
7. Rear window defogger switch 101
8. Outside temperature switch 142
9. Clock adjustment switch 142
10. Front passenger's seat belt reminder light 107
11. "AIR BAG ON" and "AIR BAG OFF" indicator lights 65
12. Cigarette lighter 144
13. Engine immobilizer system indicator light 10
14. Engine (ignition) switch 116
15. Cruise control switch 127
16. Tilt steering lock release lever 88
17. Power rear view mirror control switches 89

Instrument cluster overview

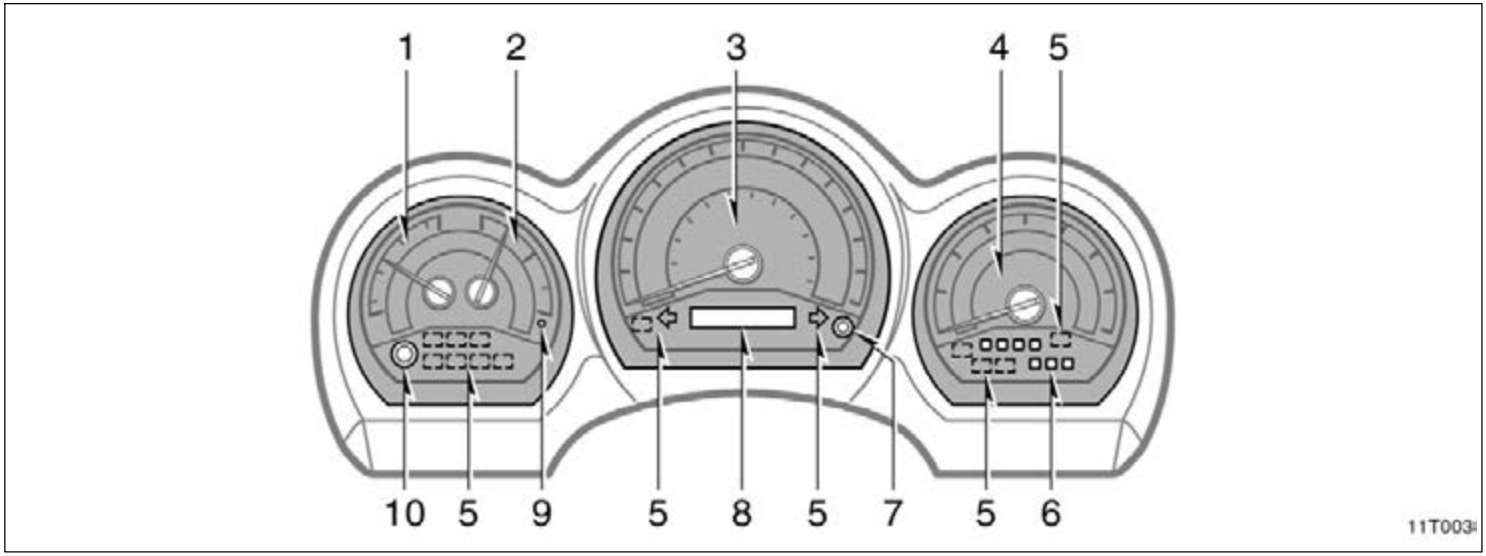

1. Engine coolant temperature gauge 104
2. Fuel gauge 104
3. Speedometer
4. Tachometer 105
5. Service reminder indicators and indicator lights 107
6. Automatic transmission shift range position display 117
7. Trip meter reset knob 105
8. Odometer and two trip meters 105
9. Low fuel level warning light 104
10. Instrument panel light control knob 96

Indicator symbols on the instrument cluster

BRAKE	Brake system warning light*1
	Driver's seat belt reminder light*1
PASSENGER	Front passenger's seat belt reminder light*1
	Charging system warning light*1
MAINT REQD	Engine oil replacement reminder light*1
CHECK	Malfunction indicator lamp*1
	Low engine oil pressure warning light*1
ABS	Anti–lock brake system warning light*1
	Open door warning light*1

	SRS warning light*1
	Tire pressure warning light*1
	Headlight high beam indicator light
	Turn signal indicator lights
P R N D 3 2 L	Automatic transmission indicator lights
CRUISE	Cruise control indicator light*2

*1: For details, see "Service reminder indicators and warning buzzers" on page 107.

*2: If this light flashes, see "Cruise control" on page 127.

SECTION 1–2

OPERATION OF INSTRUMENTS AND CONTROLS

Keys and Doors

Keys 8
Engine immobilizer system 10
Wireless remote control 11
Side doors 15
Power windows 18
Back door 19
Hood 23
Fuel tank cap 24
Panorama moonroof 26

Keys

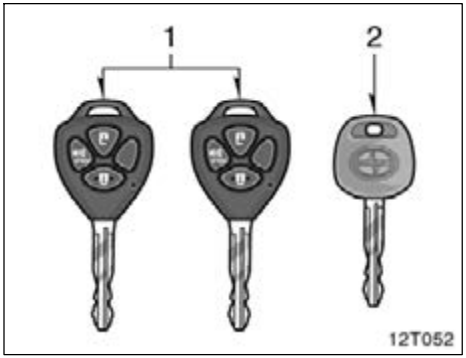

Your vehicle is supplied with two kinds of keys.

1. Master keys—These keys work in every lock. Your Scion dealer will need one of them to make a new key with a built–in transponder chip.
2. Sub key—This key will not work in the glove box.

A transponder chip for engine immobilizer system has been placed in the head of the master and sub keys. These chips are needed to enable the system to function correctly, so be careful not to lose these keys. If you make your own duplicate key, you will not be able to cancel the system or start the engine.

To protect items locked in the glove box when using valet parking, leave the sub key with the attendant.

Since the side doors can be locked without a key, you should always carry a spare master key in case you accidentally lock your keys inside the vehicle.

For information on use of the wireless remote control key, see “Wireless remote control” on page 11.

When bringing a wireless remote control key onto an aircraft, make sure you do not press any buttons on the wireless remote control key while inside the aircraft cabin. If you are carrying a wireless remote control key in your bag etc., ensure that the buttons are not likely to be pressed accidentally. Pressing a button may cause the wireless remote control key to emit radio waves that could interfere with the operation of the aircraft.

NOTICE

When using a key containing a transponder chip, observe the following precautions:

- ***When starting the engine, do not use the key with a key ring resting on the key grip and do not press the key ring against the key grip. Otherwise the engine may not start, or may stop soon after it starts.***

- ***When starting the engine, do not use the key with other transponder keys around (including keys of other vehicles) and do not press other key plates against the key grip. Otherwise the engine may not start, or may stop soon after it starts. If this happens, remove the key once and then insert it again after removing other transponder keys (including keys of other vehicles) from the ring or while gripping or covering them with your hand to start the engine.***

- ***Do not bend the key grip.***
- ***Do not cover the key grip with any material that cuts off electromagnetic waves.***
- ***Do not knock the key hard against other objects.***
- ***Do not leave the key exposed to high temperatures for a long period, such as on the dashboard and hood under direct sunlight.***
- ***Do not put the key in water or wash it in an ultrasonic washer.***

- ***Do not use the key with electromagnetic materials.***

Engine immobilizer system

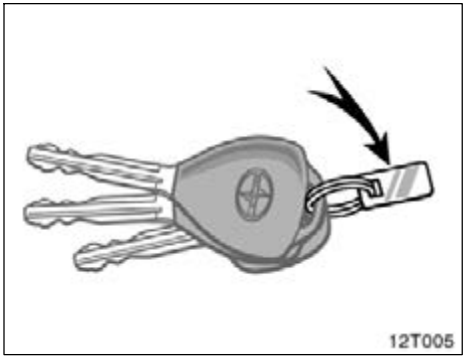

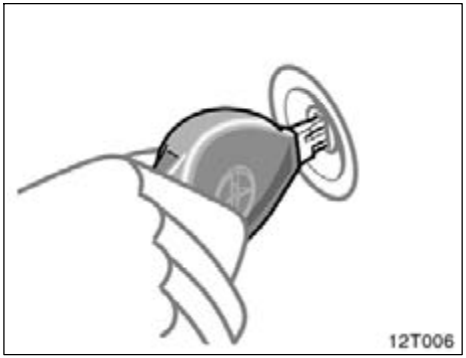

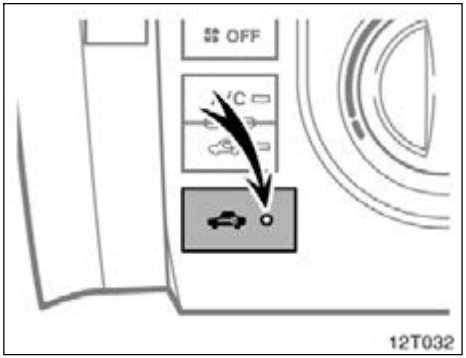

KEY NUMBER PLATE

Your key number is shown on the plate. Keep the plate in a safe place such as your wallet, not in the vehicle.

If you should lose your keys or if you need additional keys, duplicates can be made by a Scion dealer using the key number.

We recommend writing down the key number and storing it in a safe place.

The engine immobilizer system is a theft prevention system. When you insert the key in the engine switch, the transponder chip in the key's head transmits an electronic code to the vehicle. The engine will start only when the electronic code in the chip corresponds to the registered ID code for the vehicle.

Never leave the keys inside the vehicle when you leave the vehicle.

The system is automatically set when the key is removed from the engine switch. The indicator light will start flashing to show the system is set.

If any of the following indicator conditions occurs, contact your Scion dealer.

- The indicator light stays on.
- The indicator light does not start flashing when the key is removed from the engine switch.
- The indicator light flashes inconsistently.

Inserting the registered key in the engine switch automatically cancels the system, which enables the engine to start. The indicator light will go off.

The system is maintenance–free.

For your Scion dealer to make you a new key with a built–in transponder chip, your dealer will need your key number and master key. However, there is a limit to the number of additional keys your Scion dealer can make for you.

If you make your own duplicate key, you will not be able to cancel the system or start the engine.

NOTICE

Do not modify, remove or disassemble the engine immobilizer system. If any unauthorized changes or modifications are made, proper operation of the system cannot be guaranteed.

FCC ID: MOZRI–20BTY

This device complies with Part 15 of the FCC Rules. Operation is subject to the following two conditions:

(1) This device may not cause harmful interference, and (2) this device must accept any interference received, including interference that may cause undesired operation.

⚠ CAUTION

Changes or modifications not expressly approved by the party responsible for compliance could void the user's authority to operate the equipment.

Wireless remote control—

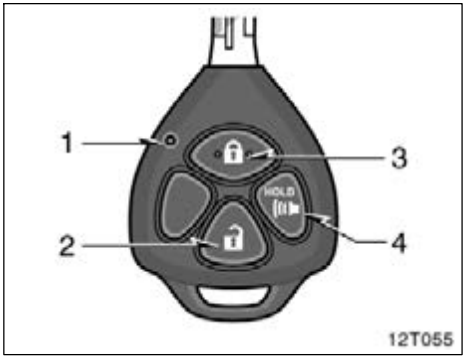

1. **Indicator light**
2. **Unlock switch**
3. **Lock switch**
4. **Panic switch**

The wireless remote control system is designed to lock or unlock the side doors and back door, from a distance within approximately 1 m (3 ft.) of the vehicle.

When you operate any switch, push it slowly and securely. At this time, the indicator light flashes once.

The wireless remote control key is an electronic component. Observe the following instructions in order not to cause damage to the key.

- Do not leave the key in places where the temperature becomes high such as on the dashboard.
- Do not disassemble it.
- Avoid knocking it hard against other objects or dropping it.
- Avoid putting it in water.

You can use up to 4 wireless remote control keys for the same vehicle. Contact your Scion dealer for detailed information.

If the wireless remote control key does not actuate the doors or operate from a normal distance, or the indicator light on the key is dimmed or does not come on:

- Check for closeness to a radio transmitter such as a radio station or an airport which can interfere with normal operation of the key.
- The battery may have been consumed. Check the battery in the key. To replace the battery, see "—Replacing battery" on page 14.

If you lose your wireless remote control key, contact your Scion dealer as soon as possible to avoid the possibility of theft, or an accident. (See "If you lose your keys" on page 214.)

FCC ID: MOZB41TG

FCC ID: MOZB21RG

This device complies with Part 15 of the FCC Rules. Operation is subject to the following two conditions:

(1) This device may not cause harmful interference, and (2) this device must accept any interference received, including interference that may cause undesired operation.

⚠ CAUTION

Changes or modifications not expressly approved by the party responsible for compliance could void the user's authority to operate the equipment.

—Locking and unlocking the doors and back door

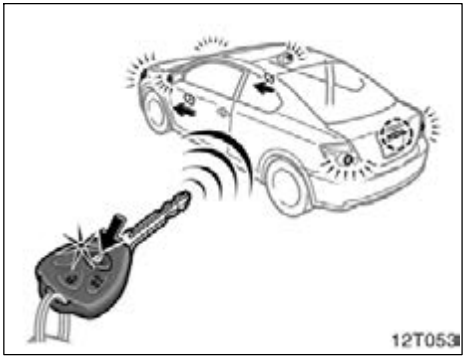

Locking operation

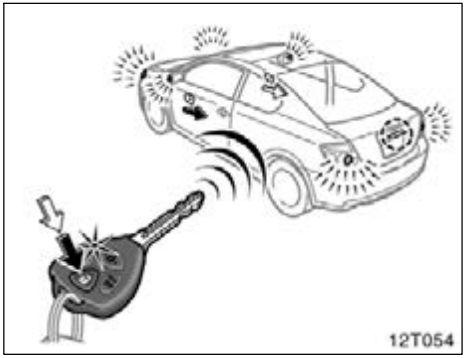

Unlocking operation

To lock and unlock all the doors, push the switches of the wireless remote control key slowly and securely.

To lock: Push the lock switch. The side doors and back door are locked simultaneously. At this time, the turn signal lights will flash once.

Check to see that the side doors and back door are securely locked.

If any of the doors is not securely closed, or if the key is in the engine switch, locking cannot be performed by the lock switch.

To unlock: Push the unlock switch once to unlock the driver's door alone. Pushing the switch twice within 3 seconds unlocks all the doors simultaneously. Each time the unlock switch is pushed, the turn signal lights will flash twice.

When the unlock switch is pressed, the interior lights and engine switch light come on. The lights remain on for about 15 seconds unless any of the doors is opened and then closed. (For further information, see "Interior lights" on page 96 and "Engine (ignition) switch light" on page 97.)

You have 30 seconds to open a door after using the wireless remote unlock feature. If a door is not opened by then, all the doors will be automatically locked again.

If the lock or unlock switch is kept pressed in, the locking or unlocking operation is not repeated. Release the switch and then push it again.

—Activating panic mode

Pushing the panic switch for 1 second blows the horn intermittently and flashes the headlights, tail lights and emergency flashers and turns on the interior light.

The panic switch is used to deter vehicle theft when you witness anyone attempting to break into or damage your vehicle.

The panic mode will last for one minute. To stop the panic mode midway, do the following:

- Push any switch on the key.
- Turn the engine switch from the "LOCK" to "ON" position.

The panic mode does not work when the engine switch is in the "ON" position.

—Replacing battery

For replacement, use a CR2016 lithium battery or equivalent and a flathead screwdriver or equivalent.

⚠ CAUTION

Special care should be taken to prevent small children from swallowing the removed battery or components.

NOTICE

- ***When replacing the battery, be careful not to lose the components.***
- ***Replace only with the same or equivalent type recommended by a Scion dealer.***
- ***Dispose of used batteries according to the local laws.***

Replace the battery by following these procedures:

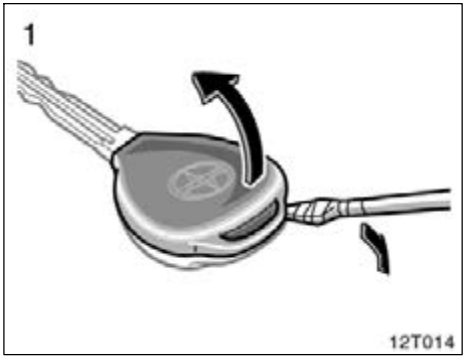

1. Open the cover using a flathead screwdriver wrapped with plastic tape.

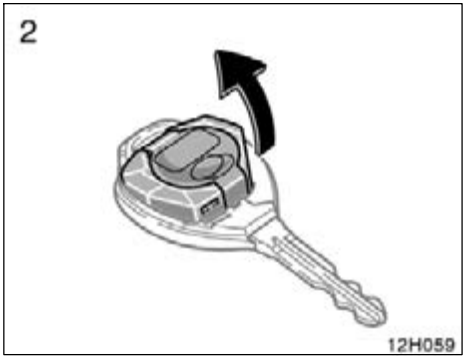

2. Remove the module from the key frame.

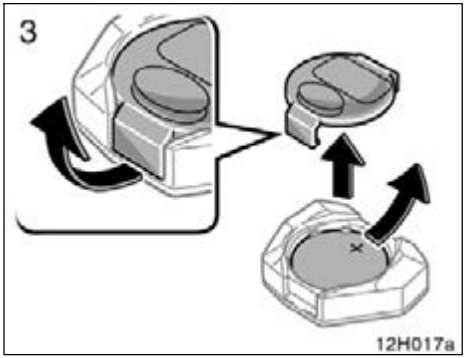

3. Remove the battery cover of the module.

NOTICE
Do not bend the terminals.

4. Remove the discharged battery and put in a new battery with positive (+) side up.

NOTICE
◆ ***Make sure the positive side and negative side of the battery are faced correctly.***
◆ ***Do not replace the battery with wet hands. Water may cause unexpected rust.***
◆ ***Do not touch or move any components inside the transmitter, or it may interfere with proper operation.***
◆ ***Be careful not to bend the electrode when inserting the battery and that dust or oils do not adhere to the frame.***

5. Install the battery cover of the module.
6. Install the module into the key frame and secure the cover.

After replacing the battery, check that the key operates properly. If the key still does not operate properly, contact your Scion dealer.

Side doors

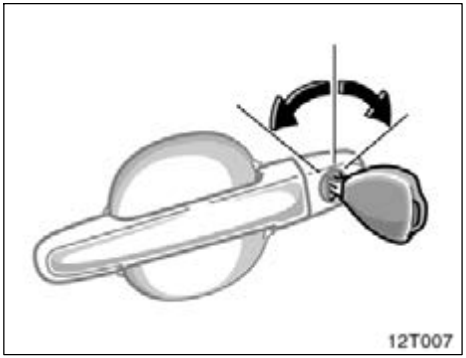

LOCKING AND UNLOCKING WITH KEY

Insert the key into the keyhole and turn it.

To lock: Turn the key forward.
To unlock: Turn the key backward.

The side doors and back door lock and unlock simultaneously with driver's door. In the driver's door lock, turning the key once will unlock the driver's door and twice in succession will unlock the side doors and back door simultaneously.

When the side doors and back door are unlocked simultaneously using either the key or the wireless remote control function, the interior lights and engine switch light will come on and remain on for about 15 seconds before fading out. (For further information, see “Interior lights” on page 96 and “Engine (ignition) switch light” on page 97.)

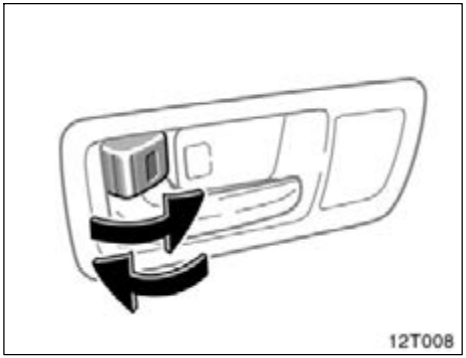

LOCKING AND UNLOCKING WITH INSIDE LOCK KNOB

Move the lock knob.

To lock: Push the knob forward.
To unlock: Pull the knob backward.

The side doors can be opened by pulling the inside handle even if the lock knobs are in the locked position.

⚠ CAUTION

Do not pull the inside handle of the doors while driving. The doors may be opened and the passengers are thrown out of the vehicle and it may result in death or serious injury. Be especially careful for the side doors, the doors may be opened even if the inside lock knobs are in locked position. Scion strongly recommends that all children be placed in the rear seat of the vehicle.

Closing the door with the lock knob in the lock position will also lock the door. Be careful not to lock your keys in the vehicle.

The side doors cannot be locked when either door is open and the key is in the engine switch.

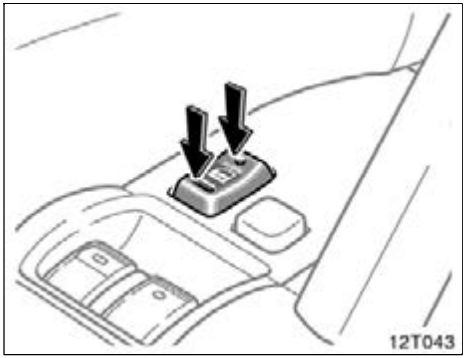

Driver's side

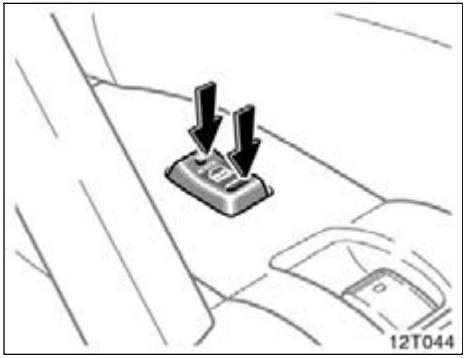

Passenger's side

LOCKING AND UNLOCKING WITH POWER DOOR LOCK SWITCH

Push the switch.

To lock: Push the switch down on the front side.
To unlock: Push the switch down on the rear side.

Operating the switch locks or unlocks the side doors and back door simultaneously.

If you do any of the following, no door can be unlocked with the power door lock switch.

- Lock the side doors and back door with the key or wireless remote control function when the side doors and back door are closed.
- Open the driver's door and move the inside lock knob of the side to the lock position, then close the door.

The power door lock switch can be reset in the following ways.

- Turn the engine switch to "ON" position.
- Unlock the side doors and back door with the key or wireless remote control function.
- Unlock the driver's door with the inside lock knob, and then unlock the side doors and back door with the power door lock switch.

Power windows

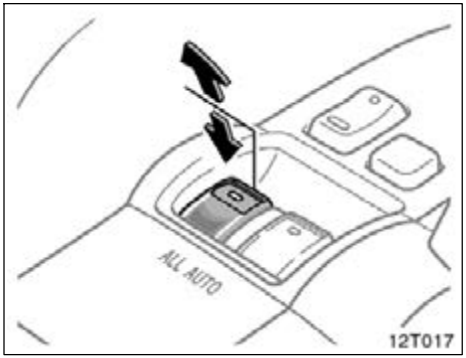

The windows can be operated with the switch on each door. The passenger's window can also be controlled by the switch on the driver's door.

The power windows work when the engine switch is in the "ON" position.

OPERATING THE SWITCHES

To lower the window, push the switch halfway down. Pull it up to raise the window. The window glass moves as long as the switch is operated.

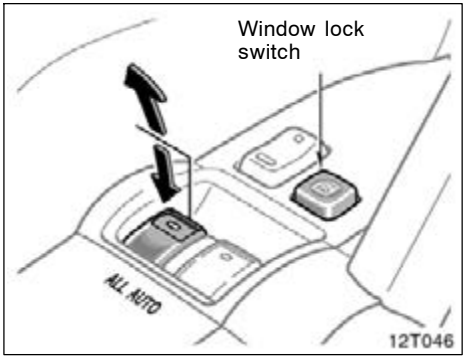

Automatic operation: Push the switch completely down or pull it completely up, and then release it. The window will fully open or close. To stop the window partway, lightly move the switch in the opposite direction and then release it.

Window lock switch: If you push in the window lock switch on the driver's door, the passenger's window cannot be operated.

The indicator lights on the switch tell you which of the switches can be operated.

Jam protection function: During automatic closing operation, the window stops and opens halfway if something gets caught between the window and body.

If the window receives a strong impact, this function may work even if nothing is caught.

⚠ CAUTION

To avoid death or serious injury, you must do the following.

- **Before you close the power windows, always make sure there is nobody around the power windows. You must also make sure the heads, hands and other parts of the bodies of all occupants are kept completely inside the vehicle. If someone's neck, head or hands get caught in a closing window, it could result in death or serious injury. When anyone closes the power windows, make sure he or she operates the windows safely.**
- **When small children are in the vehicle, never let them use the power window switches without supervision. Use the window lock switch to prevent them from making unexpected use of the switches.**
- **Be sure to remove the ignition key when you leave your vehicle.**

- **Never leave anyone (particularly a small child) alone in your vehicle, especially with the ignition key still inserted. Otherwise, he/she could use the power window switches and get trapped in a window. Unattended person (particularly a small child) can be involved in a serious accident.**
- **Never try jamming any part of your body to activate the jam protection function intentionally, as it could result in death or serious injury.**
- **The jam protection function may not work if something gets caught just before the window is fully closed.**

If the battery is disconnected or run down

The power window may not operate automatically and the jam protection function will not function correctly after you reconnect, replace or recharge the battery. At this time, the indicator lights of the switches will flash. In any of these cases, you should normalize the power window on each door.

To normalize the power windows:

1. Push down the power window switch of each door and lower the windows halfway.
2. Pull up the switch until the windows close and hold the switch for at least one second.

Make sure that the windows open and close automatically. If the power windows cannot be operated properly, have them checked by your Scion dealer.

Back door—
—Back door precautious

CAUTION

Keep the back door closed while driving. If the back door is left open, it may hit near−by objects while driving or luggage may be unexpectedly thrown out, causing an accident. In addition, exhaust gases may enter the vehicle, causing death or a serious health hazard. Make sure to close the back door before driving.

Before driving the vehicle, make sure that the back door is fully closed. If the back door is not fully closed, it may open unexpectedly while driving, causing an accident.

Never let anyone sit in the luggage compartment. In the event of sudden braking or a collision, they are susceptible to death or serious injury.

When children are in the vehicle, observe the following precautions. Failure to do so may result in death or serious injury:

- **Do not leave children alone in the luggage compartment. If a child is accidentally locked in the luggage compartment, they could overheat.**

- **Do not allow a child to open or close the back door. Doing so may cause the back door to operate unexpectedly, or cause the child's hands, head, or neck to be caught by the closing back door.**

—Operating

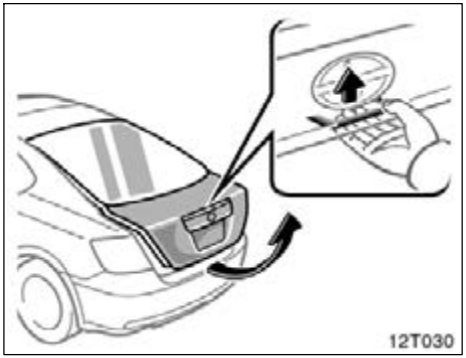

To open the back door, push the back door opener and raise the door.

The back door can be opened when the vehicle is stopped.

The back door is locked and unlocked simultaneously with side doors (see "—Locking and unlocking doors and back door" on page 12 and "Side doors" on page 15).

When the side doors and back door are unlocked simultaneously with a key, the interior lights and engine switch light will come on and remain on for about 15 seconds before fading out. (For details, see "Interior lights" on page 96 and "Engine (ignition) switch light" on page 97.)

If the back door opener does not operate, see "If you cannot operate back door opener" on page 214.

If the battery is disconnected or run down, the back door will be automatically locked and the back door system may not work after you reconnect, replace or recharge the battery. In any of these cases, normalize the back door system by following procedure.

1. Unlock the back door with the remote control key or power door lock switch.
2. Close the back door completely by hand.

If the back door system does not operate properly after the above procedure, there may be a problem in the system. Contact your Scion dealer.

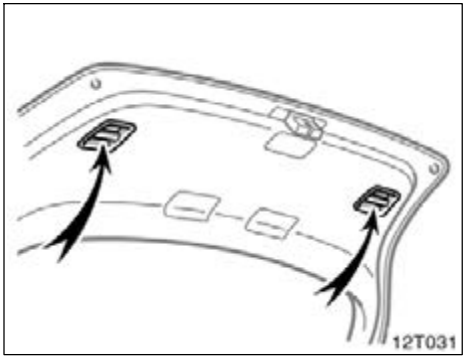

When closing the back door, the inside handle can be used to make the reach easier.

To close the back door, lower it and press down on it. After closing the back door, try pulling it up to make sure it is securely closed.

See “Cargo and luggage” on page 179 for precautions to observe when loading luggage.

⚠ CAUTION

When operating the back door, observe the following precautions. Failure to do so may cause parts of the body to be caught, resulting in serious injury.

- **Remove any heavy loads, such as snow and ice, from the back door before opening it. Failure to do so may cause the back door fall closed again after it is opened.**
- **When opening or closing the back door, thoroughly check to make sure the surrounding area is safe.**
- **If anyone is in the vicinity, make sure they are safe and let them know that the back door is about to open or close.**
- **Use caution when opening or closing the back door in windy weather as it may move abruptly in strong wind.**

- **The back door may fall if it is not opened fully. It is more difficult to open or close the back door on an incline than on a level surface, so beware of the back door unexpectedly opening or closing by itself. Make sure that the back door is fully open and secure before using the luggage compartment.**

- **When closing the back door, take extra care to prevent your fingers etc. from being caught.**
- **When closing the back door, make sure to press it lightly on its outer surface. If the back door strap is used to fully close the back door, it may result in hands or arms being caught.**

- **Do not pull on the back door damper stay to close the back door, and do not hang on the back door damper stay. Doing so may cause hands to be caught or the back door damper stay to break, causing an accident.**
- **Do not attach any accessories other than genuine Toyota parts to the back door. Such additional weight on the back door may cause the back door to fall closed again after it is opened.**

NOTICE

The back door is equipped with damper stays that hold the back door in place.

Observe the following precautions. Failure to do so may cause damage to the back door damper stay, resulting in malfunction.

- ***Do not attach any foreign objects, such as stickers, plastic sheets, or adhesives to the damper stay rod.***
- ***Do not touch the damper stay rod with gloves or other fabric items.***
- ***Do not attach any accessories other than genuine Toyota parts to the back door.***
- ***Do not place your hand on the damper stay or apply lateral forces to it.***

Hood

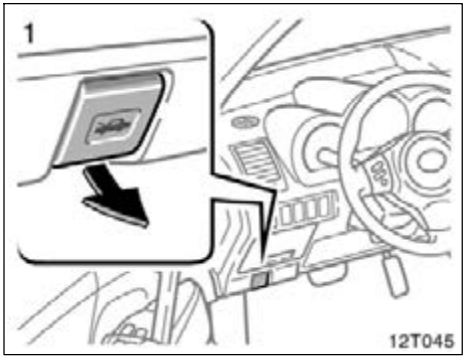

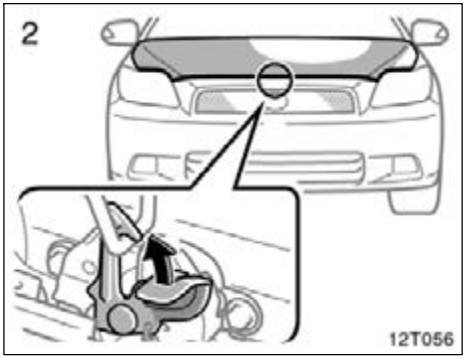

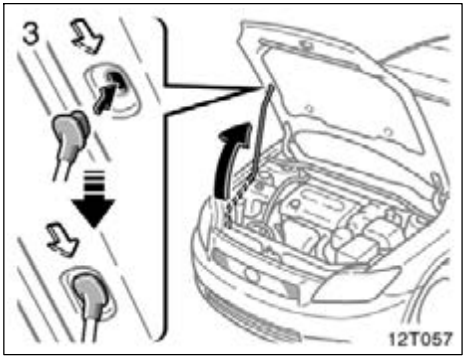

To open the hood:

1. **Pull the hood lock release lever. The hood will spring up slightly.**

⚠ CAUTION

Before driving, be sure that the hood is closed and securely locked. Otherwise, the hood may open unexpectedly while driving and an accident may occur.

2. **In front of the vehicle, pull up the auxiliary catch lever and lift the hood.**

3. **Hold the hood open by inserting the support rod into the slot.**

To insert the support rod into the slot, move it straight up. If it is moved to the side or toward the inside of the vehicle, it may become detached.

Before closing the hood, check to see that you have not forgotten any tools, rags, etc. and return the support rod to its clip—this prevents rattles. Then lower the hood and make sure it locks into place. If necessary, press down gently on the front edge to lock it.

⚠ CAUTION

After inserting the support rod into the slot, make sure the rod supports the hood securely from falling down on to your head or body.

NOTICE

Be sure to return the support rod to its clip before closing the hood. Closing the hood with the support rod up could cause the hood to bend.

Fuel tank cap

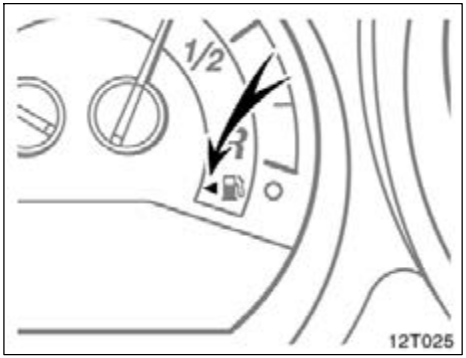

This indicates that the fuel filler door is on the left side of your vehicle.

1. To open the fuel filler door, pull the lever up.

When refueling, turn off the engine.

⚠ CAUTION

- **Do not smoke, cause sparks or allow open flames when refueling. The fumes are flammable.**
- **When opening the cap, do not remove the cap quickly. In hot weather, fuel under pressure could cause injury by spraying out of the filler neck if the cap is suddenly removed.**

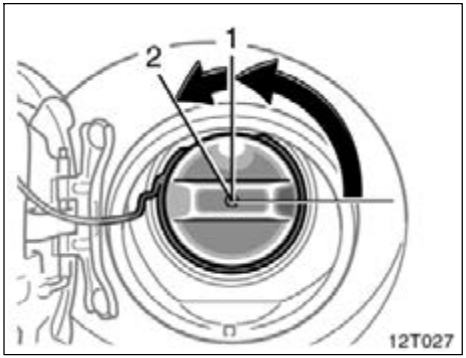

2. To remove the fuel tank cap, turn the cap counterclockwise by 90 degrees (to the pressure point 1), and then turn it an additional 30 degrees (to point 2). Pause slightly before removing it.

Although a click will be heard as you turn the cap to point 1, it does not indicate that the cap can be removed.

It is not unusual to hear a slight swoosh when the cap is opened.

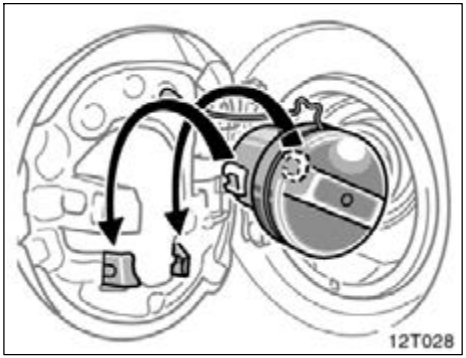

3. The removed cap can be stored on the back side of the fuel filler door.

Position the cap so that the hooks point to the left and right, and set it in the receptacle on the back side of the door.

When installing the cap, turn the cap clockwise until you hear one click. When you hear the click, the cap is fully closed.

If the cap is not tightened securely, the malfunction indicator lamp comes on. Make sure the cap is tightened securely.

The indicator lamp goes off after driving several times. If the indicator lamp does not go off, contact your Scion dealer as soon as possible.

⚠ CAUTION

- **Make sure the cap is tightened securely to prevent fuel spillage in the event of an accident.**
- **Use only a genuine fuel tank cap for replacement. It is designed to regulate fuel tank pressure.**

NOTICE

To prevent damage to the cap, observe the following precautions.

- ***Apply force only in the turning direction to the cap. Do not pull or pry it.***
- ***Do not tighten the cap further after you hear one click when installing.***

Panorama moonroof

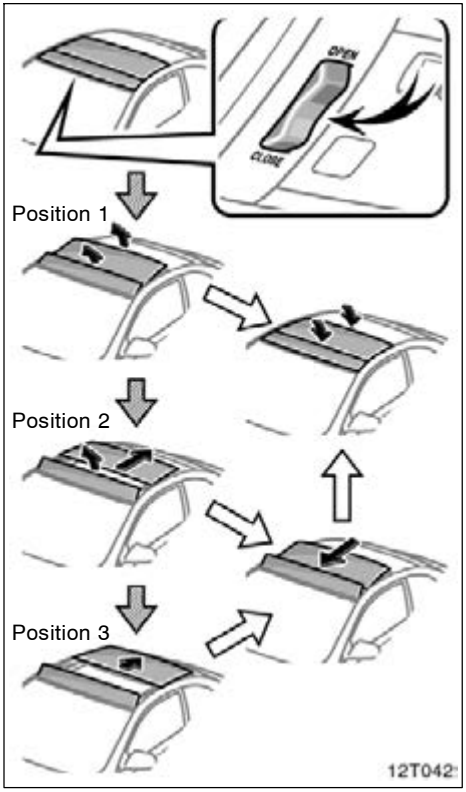

⇨: Push the “OPEN” side briefly
⇨: Hold down the “CLOSE” side

To operate the moon roof, use the switch beside the interior light.

The moon roof works when the engine switch is in the “ON” position.

1. **Push the switch briefly on the “OPEN” side. (Position 1)**

The front and center roof panels will tilt up slightly. This position is appropriate to ventilate interior air. To stop partway, push the switch on either the “OPEN” or “CLOSE” side briefly.

To lower: Hold down the switch on the “CLOSE” side. To stop partway, release the switch.

If you hold down the switch on the “OPEN” side for more than 2 seconds, the front and center roof panels will tilt up slightly. Then the front roof panel will tilt up fully and the center roof panel will slide and stop 50 mm (2.0 in.) from the fully opened position.

The front and rear sunshades can be opened or closed by hand.

To open the front sunshade, pull it toward the back. To open the rear sunshade, pull it toward the front. To close them, pull them back in the opposite direction.

2. **Push the switch briefly on the “OPEN” side again. (Position 2)**

The front roof panel will fully tilt up and the center roof panel will slide and stop 50 mm (2.0 in.) from the fully opened position.

To stop partway, push the switch on either the “OPEN” or “CLOSE” side briefly.

The front sunshade will be opened together with the roof panels.

To close: Hold down the switch on the “CLOSE” side. The center roof panel will slide and stop right before the fully closed position. When you hold down the switch once again, the front and center roof panels will lower completely. To stop partway, release the switch.

The front sunshade will not close together with the roof panels. Close the sunshade by hand.

3. **Push the switch briefly on the "OPEN" side one more time. (Position 3)**

The center roof panel will slide fully.

As driving with the moon roof opened fully will cause wind throbs, we recommend you to drive with the moon roof 50 mm (2.0 in.) from the fully opened position.

To stop partway, push the switch on either the "OPEN" or "CLOSE" side briefly.

The front sunshade will be opened together with the roof panels.

To close: Hold down the switch on the "CLOSE" side. The center roof panel will slide and stop right before the fully closed position. When you hold down the switch once again, the front and center roof panels will lower completely. To stop partway, release the switch.

The front sunshade will not close together with the roof panels. Close the sunshade by hand.

Key off operation: If both side doors are closed, the moon roof works for 43 seconds even after the engine switch is turned off. It stops working when either side door is opened.

Jam protection function: If something gets caught between the moon roof and frame during closing operation, the moon roof stops and opens to a full open position or the position opened about 200 mm (7.9 in.).

If the moon roof receives a strong impact, this function may work even if nothing is caught.

If the battery is disconnected or run down, the moon roof may not operate automatically and the jam protection function will not function correctly after you reconnect, replace or recharge the battery. In any of these cases, you should normalize the moon roof.

To normalize the moon roof, hold the switch on the "CLOSE" side for more than 2 seconds with the moon roof fully closed.

Make sure that the moon roof opens automatically. If the moon roof cannot be operated properly, have it checked by your Scion dealer.

There are cases where malfunctions may activate the jam protection function, which will prevent the roof from closing completely. In this case, pushing and holding the switch on the "CLOSE" side will close the roof completely.

⚠ CAUTION

To avoid death or serious injury, you must do the following.

- **While the vehicle is moving, always keep the heads, hands, etc. away from the roof opening. Failure to do so could result in death or serious injury.**
- **Before you close the moon roof, always make sure there is nobody around the moon roof. You must also make sure nobody places his or her head, hands and other parts of the body in the roof opening. If someone's neck, head or hands get caught in the closing roof, it could result in death or serious injury. When anyone closes the moon roof, first make sure it is safe to do so.**
- **Be sure to remove the ignition key when you leave your vehicle.**
- **Never leave anyone (particularly a small child) alone in your vehicle, especially with the ignition key still inserted. Otherwise, he/she could use the moon roof switches and get trapped in the roof opening. Unattended persons (particularly a small child) can be involved in a serious accident.**
- **Never sit on top of the vehicle around the roof opening.**
- **Never try jamming any part of your body to activate the jam protection function intentionally, as it could result in death or serious injury.**
- **The jam protection function may not work if something gets caught just before the moon roof is fully closed.**

NOTICE

There is the possibility that water or rain will get into the vehicle if you operate the moon roof after a rainfall, snowfall or car wash. Wipe the moon roof dry with a cloth before operating it.

SECTION 1–3

OPERATION OF INSTRUMENTS AND CONTROLS

Occupant restraint systems

Seats 30
Front seats 30
Rear seats 36
Head restraints 38
Seat belts 40
SRS driver airbags and front passenger airbag 48
SRS side airbags and curtain shield airbags 56
Child restraint 69

Seats

While the vehicle is being driven, all vehicle occupants should have the seatback upright, sit well back in the seat and properly wear the seat belts provided.

⚠ CAUTION

- **Do not drive the vehicle unless the occupants are properly seated. Do not allow any occupants to sit on top of a folded–down seatback, or in the luggage compartment or cargo area. If the occupants are improperly seated or restrained by seat belts, death or serious injury could result in the event of emergency braking, sudden swerving or a collision.**
- **During driving, do not allow any passengers to stand up or move around between seats. Otherwise, death or serious injuries can occur in the event of emergency braking, sudden swerving or a collision.**

Front seats—
—Front seat precautions

Driver seat

⚠ CAUTION

The SRS driver airbag deploys with considerable force, and can cause death or serious injury especially if the driver is very close to the airbag. The National Highway Traffic Safety Administration ("NHTSA") advises:

Since the risk zone for driver airbag is the first 50–75 mm (2–3 in.) of inflation, placing yourself 250 mm (10 in.) from your driver airbag provides you with a clear margin of safety. This distance is measured from the center of the steering wheel to your breastbone. If you sit less than 250 mm (10 in.) away now, you can change your driving position in several ways:

- **Move your seat to the rear as far as you can while still reaching the pedals comfortably.**
- **Slightly recline the back of the seat. Although vehicle designs vary, many drivers can achieve the 250 mm (10 in.) distance, even with the driver seat all the way forward, simply by reclining the back of the seat somewhat. If reclining the back of your seat makes it hard to see the road, raise yourself by using a firm, non–slippery cushion, or raise the seat if your vehicle has that feature.**
- **If your steering wheel is adjustable, tilt it downward. This points the airbag toward your chest instead of your head and neck.**

The seat should be adjusted as recommended by NHTSA above, while still maintaining control of the foot pedals, steering wheel, and your view of the instrument panel controls.

Front passenger seat

⚠ CAUTION

The SRS front passenger airbag also deploys with considerable force, and can cause death or serious injury especially if the front passenger is very close to the airbag. The front passenger seat should be as far from the airbag as possible with the seatback adjusted, so the front passenger sits upright.

Front seats (with SRS side airbags)

⚠ CAUTION

The SRS side airbags are installed in the driver and front passenger seats. Observe the following precautions.

- **Do not lean against the front door when the vehicle is in use, since the side airbag inflates with considerable speed and force. Otherwise, you may be killed or seriously injured.**
- **Do not use seat accessories which cover the area where the side airbags inflate. Such accessories may prevent the side airbags from activating correctly causing death or serious injury.**
- **Do not modify or replace the seats or upholstery of the seats with side airbags. Such change may prevent the side airbag system from activating correctly, disable the system or cause the side airbags to inflate accidentally, resulting in death or serious injury.**

—Seat adjustment precautions

⚠ CAUTION

- **Do not adjust the seat while the vehicle is moving as the seat may unexpectedly move and cause the driver to lose control of the vehicle.**
- **Be careful that the seat does not hit a passenger or luggage.**
- **After adjusting the seat position, release the lever and try sliding the seat forward and backward to make sure it is locked in position.**
- **Make sure the seatback is securely locked by pushing forward and rearward on the top of the seatback. Failure to do so will prevent the seat belt from operating properly.**
- **Do not put objects under the seats. Otherwise, the objects may interfere with the seat–lock mechanism or unexpectedly push up the seat position adjusting lever and the seat may suddenly move, causing the driver to lose control of the vehicle.**
- **While adjusting the seat, do not put your hands under the seat or near the moving parts. Otherwise, your hands or fingers may be caught and injured.**

—Adjusting front seats

1. SEAT POSITION ADJUSTING LEVER

Hold the center of the lever and pull it up. Then slide the seat to the desired position with slight body pressure and release the lever.

2. SEAT CUSHION ANGLE ADJUSTING KNOB

Turn the knob either way.

3. SEAT HEIGHT ADJUSTING LEVER (for driver's seat only)

To change the height of the seat, pull up or push down the lever.

4. SEATBACK ANGLE ADJUSTING LEVER

Lean forward and pull the lever up. Then lean back to the desired angle and release the lever.

⚠ CAUTION

Avoid reclining the seatback any more than needed. The seat belts provide maximum protection in a frontal or rear collision when the driver and the front passenger are sitting up straight and well back in the seats. If you are reclined, the lap belt may slide past your hips and apply restraint forces directly to the abdomen or your neck may contact the shoulder belt. In the event of a frontal collision, the more the seat is reclined, the greater the risk of death or serious injury.

5. SEATBACK LOCK RELEASE LEVER

Lift the lever. The seatback will fold forward, and the seat's slide lock is released.

Driver's seat only:
The seatback lock release lever is equipped with the seat position memory function. For details, see "—Moving front seats for rear seat entry" on page 33.

—Moving front seats for rear seat entry

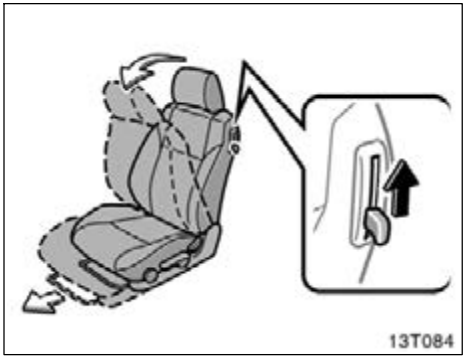

Driver's seat

Driver's seat:

For easy access to the rear seat, use the seatback lock release lever.

When the seatback lock release lever is used, the seat's original position is memorized, so the seat may be returned to that original position. However, if the seatback angle adjusting lever is used, the seat will not return to its original position.

1. Lift the seatback lock release lever.

The seatback will fold forward, and the seat's slide lock is released.

2. Move the seat all the way forward.

After rear passengers are seated, slide the seat backward and then lift the seatback. The seat will be set and locked to its previous position automatically. If the seat cannot be slid back to the previous position due to the rear passenger or luggage, the seat will be locked in that position, disabling the seat position memory system.

To recall the previous position, lift the seatback lock release lever after removing the luggage, or letting him or her get out or sit properly so that the seat can be slid back to the previous position. However, if you once slide the seat all the way backward instead of lifting the seatback lock release lever, the seat can be slid and locked in the original position.

If the driver's seat position is adjusted, the new position is set as the memorized position.

⚠ CAUTION

- **After the seatback returns, try pushing the seatback forward and rearward to make sure it is securely locked.**
- **Never allow anyone to touch seatback lock release levers while the vehicle is moving.**

NOTICE

The seatback angle adjusting lever and seatback lock release lever cannot be used at the same time. If they are used together, the seat lock mechanism may be damaged.

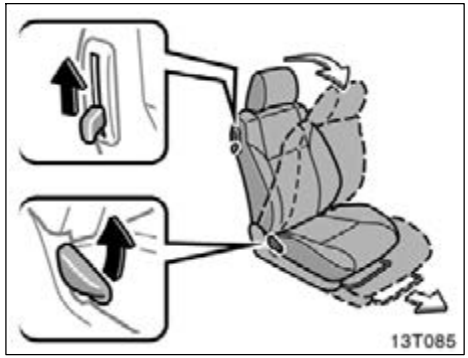

Front passenger's seat

For easy access to the rear seat, use either the seatback lock release lever or the seatback angle adjusting lever.

1. Lift the seatback lock release lever or seatback angle adjusting lever.

The seatback will fold forward, and the seat's slide lock is released.

2. Move the seat all the way forward.

After rear passengers are seated, lift the seatback and slide the seat backward until it locks.

The seat is locked in the middle of the slide range, and the seatback is locked in the most upright position.

The front passenger's seat has no memory function, so it will not return to its original position.

⚠ CAUTION

- **After the seatback returns, try pushing the seatback forward and rearward to make sure it is securely locked.**
- **Never allow anyone to touch seatback lock release levers while the vehicle is moving.**

—Flattening seatback

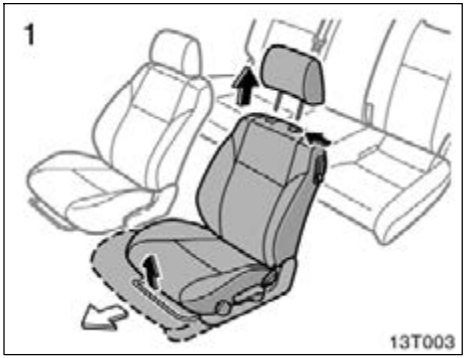

1. **Remove the head restraint. Hold the center of the lever and pull it up. Then slide the seat to the front–most lock position.**

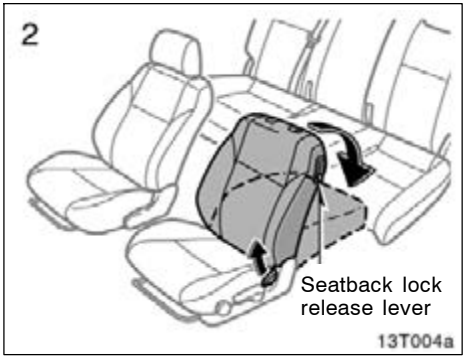

2. **Pull the seatback angle adjusting lever to unlock and push down the seatback.**

When returning the seatback upright, be careful not to make yourself hit by the seatback which will bound with considerable spring force.

Driver's seat only:
When raising the seatback, use the seatback angle adjusting lever, not seatback lock release lever.

If you use the seatback lock release lever, the flat seat position will be memorized, and you will not be able to lock the seat.

After returning the seat to its original position, be certain to replace the head restraint.

⚠ CAUTION

- **Do not allow passengers to ride on the flattened seat while driving; use the seat in the normal position.**
- **After putting back the seat, try pushing the seat and seatback forward and rearward to make sure it is secured in place. Be certain to replace head restraint.**

Rear seats—
—Rear seat precautions

⚠ CAUTION

- **Do not adjust the seat while the vehicle is moving.**
- **Be careful that the seat does not hit a passenger or luggage.**

When returning seats to their original position, observe the following in order to prevent death or serious injury in the event of a sudden stop, sudden swerve or collision:

- **Make sure the seatback is securely locked by pushing forward and rearward on the top of the seatback. Failure to do so will prevent the seat belt from operating properly.**
- **Make sure the seat belts are not twisted or caught under the seat and are arranged in their proper position and are ready to use.**

Tumbling the seats will enlarge the luggage compartment. See “Cargo and luggage” on page 179 for precautions when loading luggage.

—Adjusting rear seats

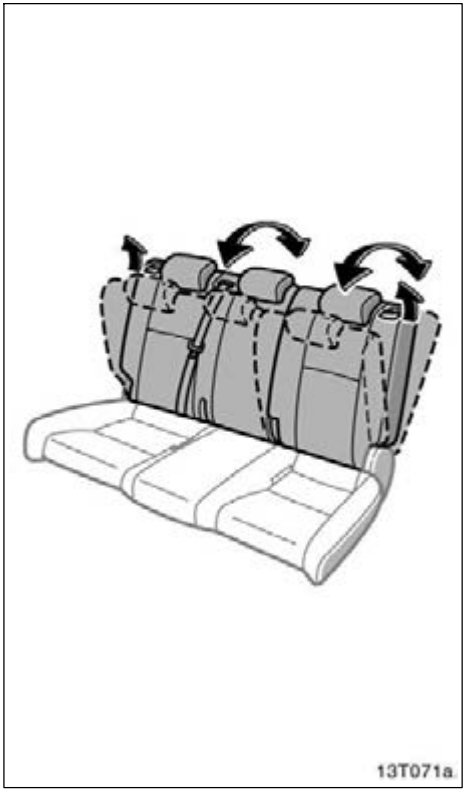

SEATBACK ANGLE ADJUSTING LEVER

Lean forward and pull the lever toward you. Then lean back to the desired angle and release the lever.

⚠ CAUTION

- **Avoid reclining the seatback any more than needed. The seat belts provide maximum protection in a frontal or rear collision when the passengers are sitting up straight and well back in the seats. If you are reclined, the lap belt may slide past your hips and apply restraint forces directly to the abdomen or your neck may contact the shoulder belt. In the event of a frontal collision, the more the seat is reclined, the greater the risk of death or serious injury.**
- **Do not adjust the seat while the vehicle is moving.**
- **After adjusting the seatback, push your body back against the seat to make sure the seat is locked in position.**

—Folding down rear seats

NOTICE

Do not fold the seatback forward while the luggage cover is set.

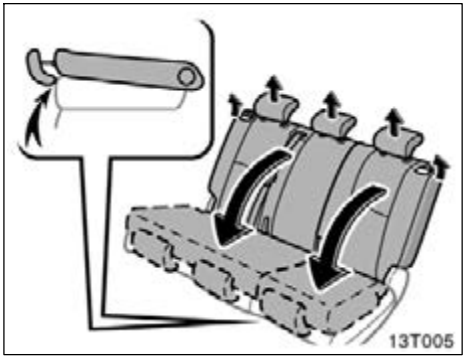

Raise the head restraints a little. Pull up the rear seatback angle adjusting lever and fold the seatbacks down. The lowered head restraints will prevent the seatback from being down completely.

Each seatback can be folded separately.

This will enlarge the luggage compartment as far as the seatbacks. See “Cargo and luggage” on page 179 for precautions when loading luggage.

⚠ CAUTION

When only rear left seat is folded down, rear seat alone can be used. Never sit on the center seat because the rear center seat belt cannot be fastened correctly when the rear left seat is folded down.

When returning the seatback to the upright position, observe the following precautions in order to prevent death or serious injury in the event of a sudden stop, sudden swerve or collision:

- **Make sure the seatback is securely locked by pushing forward and rearward on the top of the seatback. Failure to do so will prevent the seat belt from operating properly.**
- **Make sure the seat belts are not twisted or caught in the seatback and are arranged in the proper position and are ready to use.**

Head restraints

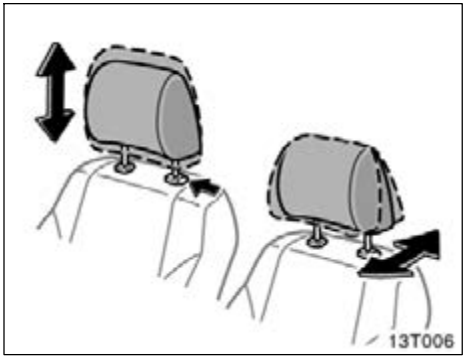

Driver's seat

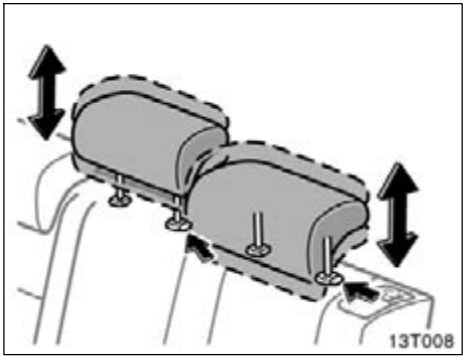

Rear seat

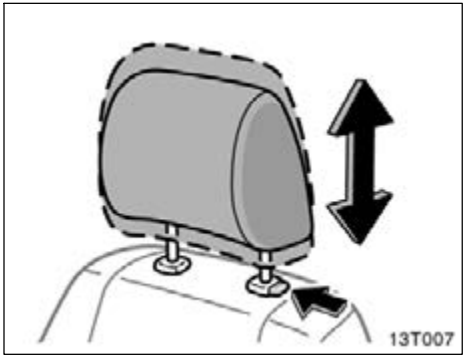

Front passenger's seat

Head restraints are provided for all seats. For your safety and comfort, adjust the head restraint before driving.

To raise: Pull it up.
To lower: Push it down while pressing the lock release button.

Driver's head restraint only—You can also move the front head restraint forward or backward. If such adjustment is desired, pull or push the base of the head restraint.

Rear center head restraint—When an occupant sits on the rear center seat, always pull up the rear center head restraint to the lock position.

The head restraint is most effective when it is close to your head. Therefore, using a cushion on the seatback is not recommended.

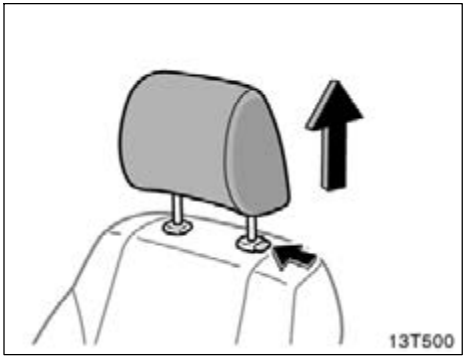

REMOVING THE HEAD RESTRAINTS

Pull the head restraint up while pressing the lock release button.

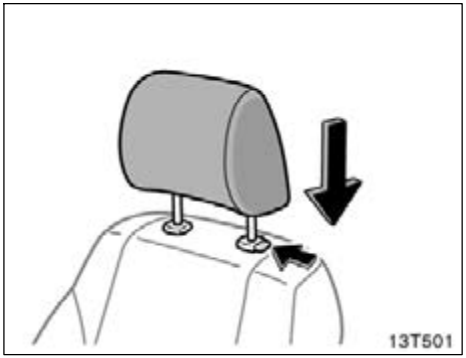

INSTALLING THE HEAD RESTRAINTS

Align the head restraint with the installation holes and push it down to the lock position.

Press and hold the lock release button when lowering the head restraint.

⚠ CAUTION

- **Adjust the center of the head restraint so that it is closest to the top of your ears.**
- **Use the head restraint designed for each respective seat.**
- **After adjusting the head restraint, make sure it is locked in position.**
- **Do not drive with the head restraints removed.**

Seat belts—
—Seat belt precautions

Scion strongly urges that the driver and passengers in the vehicle be properly restrained at all times with the seat belts provided. Failure to do so could increase the chance of injury and/or the severity of injury in accidents.

The seat belts provided for your vehicle are designed for people of adult size, large enough to properly wear them.

Child. Use a child restraint system appropriate for the child until the child becomes large enough to properly wear the vehicle's seat belts. See "Child restraint" on page 69 for details.

If a child is too large for a child restraint system, the child should sit in the rear seat and must be restrained using the vehicle's seat belt. According to accident statistics, the child is safer when properly restrained in the rear seat than in the front seat.

If a child must sit in the front seat, the seat belts should be worn properly. If an accident occurs and the seat belts are not worn properly, the force of the rapid inflation of the airbag may cause death or serious injury to the child.

Do not allow any children to stand up or kneel on either rear or front seats. An unrestrained child could suffer serious injury or death during emergency braking or a collision. Also, do not let the child sit on your lap. Holding a child in your arms does not provide sufficient restraint.

Pregnant woman. Scion recommends the use of a seat belt. Ask your doctor for specific recommendations. The lap belt should be worn securely and as low as possible over the hips and not on the waist.

Injured person. Scion recommends the use of a seat belt. Depending on the injury, first check with your doctor for specific recommendations.

⚠ CAUTION

Persons should ride in their seats properly wearing their seat belts whenever the vehicle is moving. Otherwise, they are much more likely to suffer serious bodily injury or death in the event of sudden braking or a collision.

When using the seat belts, observe the following:

- **Use the belt for only one person at a time. Do not use a single belt for two or more people—even children.**
- **Avoid reclining the seatback any more than needed. The seat belts provide maximum protection in a frontal or rear collision when the driver and the front passenger are sitting up straight and well back in the seats. If you are reclined, the lap belt may slide past your hips and apply restraint forces directly to the abdomen or your neck may contact the shoulder belt. In the event of a frontal collision, the more the seat is reclined, the greater the risk of death or serious injury.**

- **Be careful not to damage the belt webbing or hardware. Take care that they do not get caught or pinched in the seat or doors.**
- **Inspect the belt system periodically. Check for cuts, fraying, and loose parts. Damaged parts should be replaced. Do not disassemble or modify the system.**
- **Keep the belts clean and dry. If they need cleaning, use a mild soap solution or lukewarm water. Never use bleach, dye, or abrasive cleaners, or allow them to come into contact with the belts—they may severely weaken the belts. (See "Cleaning the interior" on page 219.)**
- **Replace the belt assembly (including bolts) if it has been used in a severe impact. The entire assembly should be replaced even if damage is not obvious.**

—Fastening front and rear seat belts

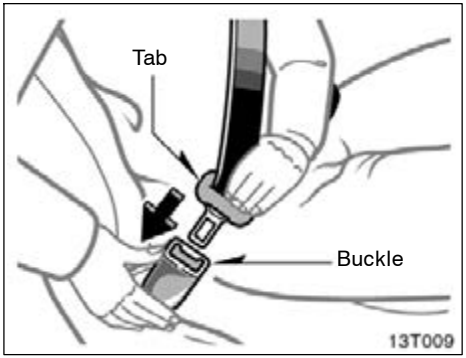

Adjust the seat as needed and sit up straight and well back in the seat. To fasten your belt, pull it out of the retractor and insert the tab into the buckle.

You will hear a click when the tab locks into the buckle.

The seat belt length automatically adjusts to your size and the seat position.

The retractor will lock the belt during a sudden stop or on impact. It also may lock if you lean forward too quickly. A slow, easy motion will allow the belt to extend, and you can move around freely.

When a passenger's shoulder belt is completely extended and is then retracted even slightly, the belt is locked in that position and cannot be extended. This feature is used to hold the child restraint system securely. (For details, see "Child restraint" on page 69.) To free the belt again, fully retract the belt and then pull the belt out once more.

If the seat belt cannot be pulled out of the retractor, firmly pull the belt and release it. You will then be able to smoothly pull the belt out of the retractor.

⚠ CAUTION

- **After inserting the tab, make sure the tab and buckle are locked and that the belt is not twisted.**
- **Do not insert coins, clips, etc. in the buckle as this may prevent you from properly latching the tab and buckle.**
- **If the seat belt does not function normally, immediately contact your Scion dealer. Do not use the seat until the seat belt is fixed, because it cannot protect an adult occupant or your child from death or serious injury.**

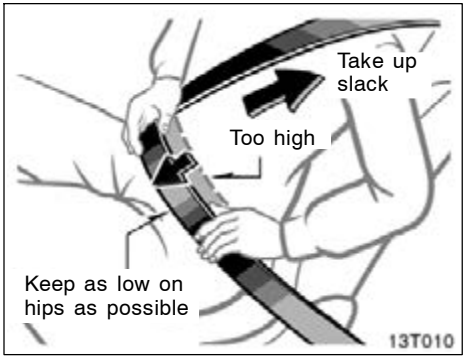

Adjust the position of the lap and shoulder belts.

Position the lap belt as low as possible on your hips—not on your waist, then adjust it to a snug fit by pulling the shoulder portion upward through the latch plate.

⚠ CAUTION

- **Both high–positioned lap belts and loose–fitting belts could cause death or serious injuries due to sliding under the lap belt during a collision or other unintended event. Keep the lap belt positioned as low on hips as possible.**
- **Do not place the shoulder belt under your arm.**

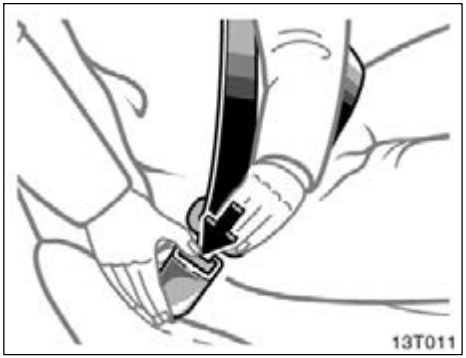

To release the belt, press the buckle release button and allow the belt to retract.

If the belt does not retract smoothly, pull it out and check for kinks or twists. Then make sure it remains untwisted as it retracts.

—Seat belt extender

If your seat belts cannot be fastened securely because they are not long enough, a personalized seat belt extender is available from your Scion dealer free of charge.

Please contact your local Scion dealer so that the dealer can order the proper required length for the extender. Bring the heaviest coat you expect to wear for proper measurement and selection of length. Additional ordering information is available at your Scion dealer.

⚠ CAUTION

When using the seat belt extender, observe the following precautions. Failure to follow these instructions could reduce the effectiveness of the seat belt restraint system in case of an accident, increasing the chance of death or serious injury.

- **Remember that the extender provided for you may not be safe when used on a different vehicle, for another person, or at a different seating position than the one originally intended.**

- **If the seat belt extender has been connected to the driver's seat belt buckle without wearing the seat belt when using the extender in the driver's seat, the SRS driver's airbag system will judge that the driver wears the seat belt even if not wearing it. In this case, the driver's airbag may not activate correctly, causing death or serious injury in the event of a collision. Be sure to wear the seat belt with the seat belt extender. Otherwise, there will also not be any effective protection in a sudden stop or a collision provided by the seat belt.**

- **Make sure the "AIR BAG ON" indicator light is illuminated when using the seat belt extender for the front passenger seat. If the "AIR BAG OFF" indicator light is illuminated, disconnect the extender tongue from the seat belt buckle, then reconnect the seat belt. Reconnect the seat belt extender after making sure the "AIR BAG ON" indicator light is illuminated. If you use the seat belt extender while the "AIR BAG OFF" indicator is illuminated, the front passenger airbag and side airbag on the front passenger side may not activate correctly, causing death or serious injury in the event of the collision.**

- **Be sure to wear the seat belt without the seat belt extender if you can fasten the seat belt without the extender.**
- **Do not use the seat belt extender when installing a child restraint system on the front or rear passenger seat. If installing a child restraint system with the seat belt extender connected to the seat belt, the seat belt will not securely hold the child restraint system, which could cause death or serious injury to the child or other passengers in the event of collision.**

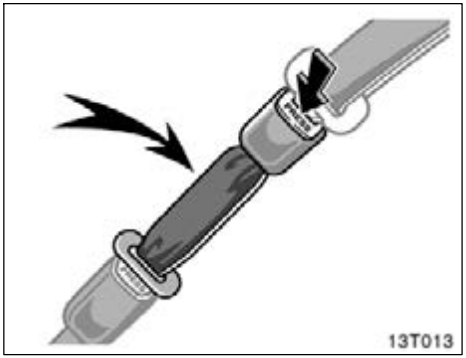

To connect the extender to the seat belt, insert the tab into the seat belt buckle so that the "PRESS" signs on the buckle release buttons of the extender and the seat belt are both facing outward as shown.

You will hear a click when the tab locks into the buckle.

When releasing the seat belt, press on the buckle release button on the extender, not on the seat belt. This helps prevent damage to the vehicle interior and extender itself.

As far as the seat belt extender on the front passenger side is concerned, do not fail to disconnect the extender from the seat belt after the above operation in order to activate the front passenger airbag correctly when getting into the vehicle next time.

When not in use, remove the extender and store in the vehicle for future use.

CAUTION

- **After inserting the tab, make sure the tab and buckle are locked and that the lap and shoulder portions of the belt and the seat belt extender are not twisted.**
- **Do not insert coins, clips, etc. in the buckle as this may prevent you from properly latching the tab and buckle.**
- **If the seat belt does not function normally, immediately contact your Scion dealer. Do not use the seat until the seat belt is fixed, because it cannot protect an adult occupant or your child from injury.**

—Seat belt pretensioners

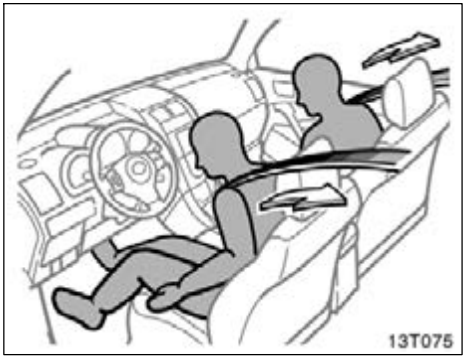

The driver and front passenger seat belt pretensioners are designed to be activated in response to a severe frontal impact.

When the sensor detects a severe frontal impact, the front seat belts are quickly drawn back by the retractors so that the belts snugly restrain the occupants.

The front passenger's seat belt pretensioner will not activate if no passenger is detected in the front passenger seat by the front passenger occupant classification system. However, the front passenger's seat belt pretensioner may activate if luggage is put on the seat, or the seat belt is buckled up regardless of the presence of an occupant in the seat. (As for the front passenger occupant classification system, see "—Front passenger occupant classification system" on page 65.)

The seat belt pretensioners and SRS airbags may not operate together in all collisions.

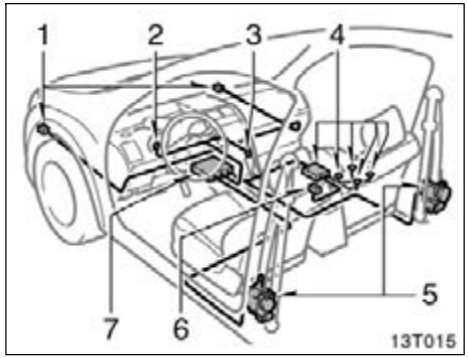

The seat belt pretensioner system consists mainly of the following components, and their locations are shown in the illustration.

1. Front airbag sensors
2. SRS warning light
3. "AIR BAG ON" and "AIR BAG OFF" indicator lights
4. Front passenger occupant classification system (ECU and sensors)
5. Seat belt pretensioner assemblies
6. Front passenger's seat belt buckle switch
7. Airbag sensor assembly

The seat belt pretensioners are controlled by the airbag sensor assembly. The airbag sensor assembly consists of a safing sensor and airbag sensor.

When the seat belt pretensioners are activated, an operating noise may be heard and a small amount of non–toxic gas may be released. This does not indicate that a fire is occurring. This gas is normally harmless.

Once the seat belt pretensioners have been activated, the seat belt retractors remain locked.

If the vehicle is involved in multiple collisions, the pretensioner will activate for the first collision, but will not activate for the second or subsequent collisions.

⚠ CAUTION

Observe the following precautions to reduce the risk of injury in the event of sudden braking or an accident. Failure to do so may cause death or serious injury.

- **If the pretensioner has activated, the seat belt becomes locked: it cannot be further extended, nor will it return to the stowed position. The seat belt cannot be used again and must be replaced at your Scion dealer.**
- **Do not modify, remove, strike or open the seat belt pretensioner assemblies, airbag sensor or surrounding area or wiring. Consult your Scion dealer about any repair and modification.**

NOTICE

Do not perform any of the following changes without consulting your Scion dealer. Such changes can interfere with proper operation of the seat belt pretensioners in some cases.

- ***Installation of electronic devices such as a mobile two–way radio, cassette tape player or compact disc player***
- ***Repairs on or near the front seat belt retractor assemblies***
- ***Modification of the suspension system***
- ***Modification of the front end structure***
- ***Attachment of a grille guard (bull bar, kangaroo bar, etc.), snowplow, winches or any other equipment to the front end***
- ***Repairs made on or near the front fenders, front end structure or console***

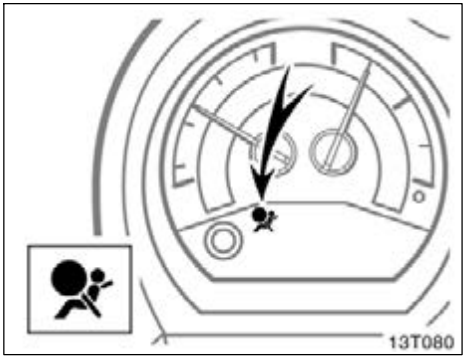

This indicator comes on when the engine switch is turned to the "ON" position. It goes off after about 6 seconds. This means the seat belt pretensioners are operating properly.

This warning light system monitors the airbag sensor assembly, front airbag sensors, side and curtain shield airbag sensor assemblies, curtain shield airbag sensor assemblies, driver's seat position sensor, driver's seat belt buckle switch, front passenger occupant classification system, "AIR BAG ON" indicator light, "AIR BAG OFF" indicator light, front passenger's seat belt buckle switch, seat belt pretensioner assemblies, inflators, warning light, interconnecting wiring and power sources. (For details, see "Service reminder indicators and warning buzzers" on page 107.)

If any of the following conditions occurs, this indicates a malfunction of the airbags or seat belt pretensioners. Contact your Scion dealer as soon as possible.

- When the engine switch is turned to the "ON" position, the light does not come on or remains on for more than 6 seconds.
- The light comes on while driving.
- If any seat belt does not retract or cannot be pulled out due to a malfunction or activation of the relevant seat belt pretensioner.
- The seat belt pretensioner assembly or surrounding area has been damaged.

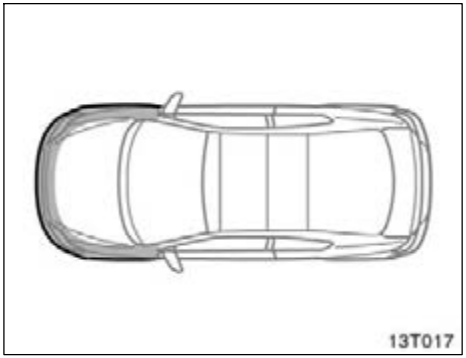

In the following cases, contact your Scion dealer as soon as possible:

- The front of the vehicle (shaded in the illustration) was involved in an accident that was not severe enough to cause the seat belt pretensioners to operate.
- Either seat belt pretensioner assembly or surrounding area is scratched, cracked, or otherwise damaged.

SRS driver airbags and front passenger airbag

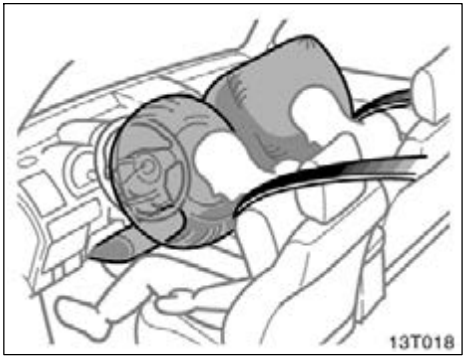

The SRS (Supplemental Restraint System) front airbags are designed to provide further protection for the driver and front passenger in addition to the primary safety protection provided by the seat belts.

Your vehicle is equipped with "ADVANCED AIRBAGS" designed based on US motor vehicle safety standards (FMVSS208). The airbag system controls airbag deployment power for the driver and front passenger. The driver airbag system consists of the driver seat's position sensor etc. The front passenger's airbag system consists of the front passenger occupant classification sensor etc.

In response to a severe frontal impact, the SRS front airbags work with the seat belts to help reduce injury by inflating. The SRS front airbags help reduce injuries mainly to the driver's or front passenger's head or chest caused by hitting the vehicle interior.

The SRS front passenger airbag will not activate if there is no passenger sitting in the front passenger seat. However, the front passenger airbag may deploy if luggage is put in the seat, or the seat belt is buckled up, regardless of the presence of an occupant in the seat. (As for the front passenger occupant classification system, see "—Front passenger occupant classification system" on page 65.)

Always wear your seat belt properly.

⚠ CAUTION

- **The SRS front airbag system is designed only as a supplement to the primary protection of the driver and front passenger seat belt systems. The driver and front passenger can be killed or seriously injured by the inflating airbags if they do not wear the available seat belts properly. During sudden braking just before a collision, an unrestrained driver or front passenger can move forward into direct contact with or close proximity to the airbag which may then deploy during the collision. To ensure maximum protection in an accident, the driver and all passengers in the vehicle must wear their seat belts properly. Wearing a seat belt properly during an accident reduces the chances of death or serious injury or being thrown out of the vehicle. For instructions and precautions concerning the seat belt system, see "Seat belts" on page 40.**

- **Improperly seated and/or restrained infants and children can be killed or seriously injured by the deploying airbags. An infant or child who is too small to use a seat belt should be properly secured using a child restraint system. Scion strongly recommends that all infants and children be placed in the rear seat of the vehicle and properly restrained. The rear seat is the safest for infants and children. For instructions concerning the installation of a child restraint system, see "Child restraint" on page 69.**

The SRS front airbags are designed to deploy in severe (usually frontal) collisions where the magnitude and duration of the forward deceleration of the vehicle exceed the designed threshold level.

The SRS front airbags will deploy in the event of an impact that exceeds the set threshold level (the level of force corresponding to a 20–30 km/h (12–19 mph) frontal collision with a fixed wall that does not move or deform).

However, this threshold velocity will be considerably higher if the vehicle strikes an object, such as a parked vehicle or sign pole, which can move or deform on impact, or if the vehicle is involved in an underride collision (e.g. a collision in which the front of the vehicle “underrides”, or goes under, the bed of a truck, etc.).

It is possible that in some collisions where the forward deceleration of the vehicle is very close to the designed threshold level, the SRS front airbags and the seat belt pretensioners may not activate together.

Always wear your seat belts properly.

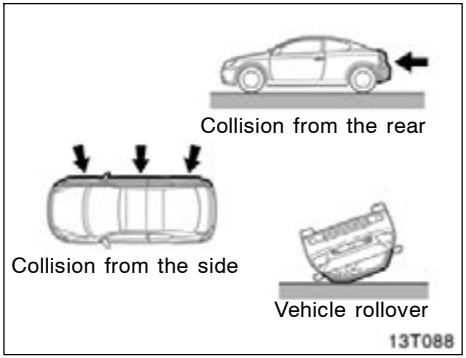

The SRS front airbags are not generally designed to inflate if the vehicle is involved in a side or rear collision, if it rolls over, or if it is involved in a low–speed frontal collision. But, whenever a collision of any type causes sufficient forward deceleration of the vehicle, deployment of the SRS front airbags may occur.

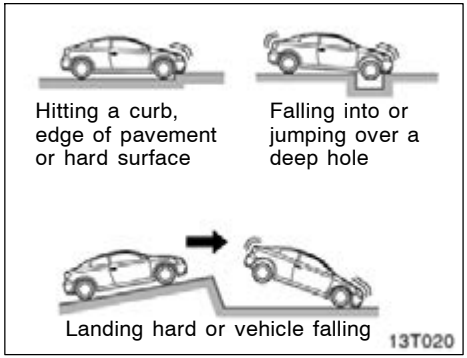

The SRS front airbags may also deploy if a serious impact occurs to the underside of your vehicle. Some examples are shown in the illustration.

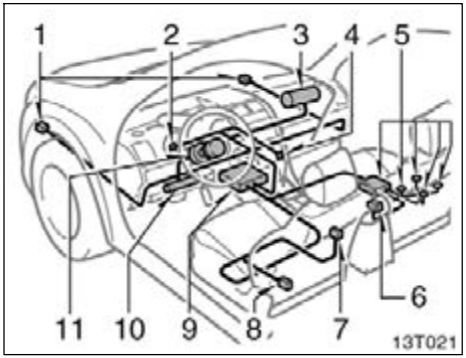

The SRS front airbag system consists mainly of the following components, and their locations are shown in the illustration.

1. Front airbag sensors
2. SRS warning light
3. Airbag module for front passenger (airbag and inflator)
4. “AIR BAG ON” and “AIR BAG OFF” indicator lights
5. Front passenger occupant classification system (ECU and sensors)
6. Front passenger’s seat belt buckle switch
7. Driver’s seat belt buckle switch
8. Driver’s seat position sensor
9. Airbag sensor assembly
10. Knee airbag module for driver (airbag and inflator)
11. Airbag module for driver (airbag and inflator)

The airbag sensor assembly consists of a safing sensor and airbag sensor.

The front airbag sensors constantly monitor the forward deceleration of the vehicle. If an impact results in a forward deceleration beyond the designed threshold level, the system triggers the airbag inflators. At this time a chemical reaction in the inflators very quickly fills the airbags with non–toxic gas to help restrain the forward motion of the occupants. The front airbags then quickly deflate so that there is no obstruction of the driver’s vision should it be necessary to continue driving.

When the airbags inflate, they produce a loud noise and release some smoke and residue along with non–toxic gas. This does not indicate a fire.

⚠ CAUTION

The smoke produced when a airbag inflates may remain inside the vehicle for some time, and may cause some minor irritation to the eyes, skin or breathing. Be sure to wash off any residue as soon as possible to prevent any potential skin irritation with soap and water. If you can safely exit from the vehicle, you should do so immediately.

Deployment of the airbags happens in a fraction of a second, so the airbags must inflate with considerable force. While the system is designed to reduce serious injuries, primarily to the head and chest, it may also cause other, less severe injuries to the face, chest, arms and hands. These are usually in the nature of minor burns or abrasions and swelling, but the force of a deploying airbag can cause more serious injuries, especially if an occupant's hands, arms, chest or head is in close proximity to the airbag module at the time of deployment. This is why it is important for the occupant to: avoid placing any object or part of the body between the occupant and the airbag module; sit straight and well back into the seat; wear the available seat belt properly; and sit as far as possible from the airbag module, while still maintaining control of the vehicle.

Parts of the airbag module (steering wheel hub, lower portion of instrument panel, airbag cover and inflator) may be hot for several minutes after deployment, so do not touch! The airbags inflate only once. The windshield may be damaged by absorbing some of the force of the inflating airbag.

⚠ CAUTION

The driver or front passenger who is too close to the steering wheel, lower portion of instrument panel or dashboard during airbag deployment can be killed or seriously injured. Scion strongly recommends that:

- **The driver sit as far back as possible from the steering wheel while still maintaining control of the vehicle.**
- **The front passenger sit as far back as possible from the dashboard.**
- **All vehicle occupants must be properly restrained using the available seat belts.**

- If the seat belt extender has been connected to the driver's seat belt buckle without wearing the seat belt when using the extender in the driver's seat, the SRS driver's airbag system will judge that the driver wears the seat belt even if not wearing it. In this case, the driver's airbag may not activate correctly, causing death or serious injury in the event of a collision. Be sure to wear the seat belt with the seat belt extender. Otherwise, there will also not be any effective protection in a sudden stop or a collision provided by the seat belt.

For instructions and precautions concerning the seating position, see "—Front seat precautions" on page 30.

- Do not sit on the edge of the seat or lean against the dashboard when the vehicle is in use, since the front passenger airbag could inflate with considerable speed and force. Anyone who is up against, or very close to, an airbag when it inflates, can be killed or seriously injured. Sit up straight and well back in the seat, and always use your seat belt properly.

- Scion strongly recommends that all infants and children be placed in the rear seat of the vehicle and be properly restrained.
- Do not allow a child to stand up or kneel on the front passenger seat, since the front passenger airbag could inflate with considerable speed and force. Otherwise, the child may be killed or seriously injured.

- **Do not hold a child on your lap or in your arms. Use a child restraint system in the rear seat. For instructions concerning the installation of a child restraint system, see “Child restraint” on page 69.**

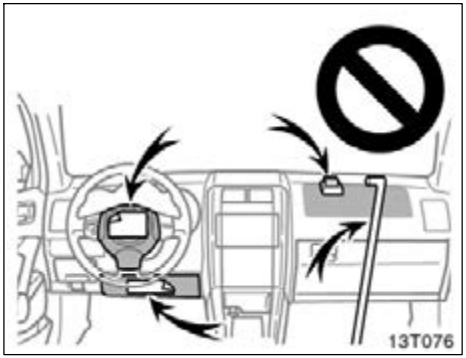

- **Do not put anything or any part of your body on or in front of the dashboard, lower portion of instrument panel, steering wheel pad that houses the front airbag system or in the area where the SRS knee airbag will inflate. They might restrict inflation or cause death or serious injury as they are projected rearward by the force of the deploying airbags. Likewise, the driver and front passenger should not hold objects in their arms or on their knees.**

- **If a vinyl cover is put on the area where the SRS knee airbag will deploy, be sure to remove it.**
- **Do not modify or remove any wiring. Do not modify, remove, strike or open any components such as the steering wheel pad, steering wheel, column cover, dashboard near the front passenger airbag, front passenger airbag cover, front passenger airbag, driver knee airbag or airbag sensor assembly. Doing so may prevent the front airbag system from activating correctly, cause sudden activation of the system or disable the system, which could result in death or serious injury.**

Failure to follow these instructions can result in death or serious injury. Consult your Scion dealer about any repair and modification.

If you wish to modify your vehicle for a person with a physical disability, consult your Scion dealer. It may dangerously interfere with the SRS front airbags operation.

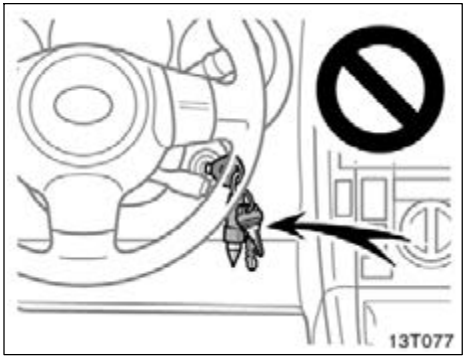

- **Do not attach any heavy, sharp or hard objects such as keys or accessories to the ignition key. The objects may restrict the SRS knee airbag inflation or be thrust into the driver's seat area by the force of the deploying airbag, thus causing a danger.**

NOTICE

Do not perform any of the following changes without consulting your Scion dealer. Such changes can interfere with proper operation of the SRS front airbag system in some cases.

- ***Installation of electronic devices such as a mobile two–way radio, cassette tape player or compact disc player***
- ***Modification of the suspension system***
- ***Modification of the front end structure***
- ***Attachment of a grille guard (bull bar, kangaroo bar, etc.), snowplow, winches or any other equipment to the front end***
- ***Repairs made on or near the front fenders, front end structure, console, steering column, steering wheel, lower portion of instrument panel or dashboard near the front passenger airbag***

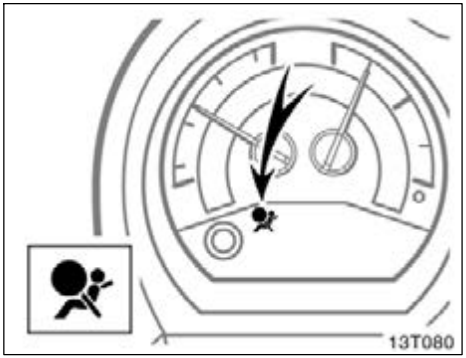

This indicator comes on when the engine switch is turned to the "ON" position. It goes off after about 6 seconds. This means the SRS front airbags are operating properly.

This warning light system monitors the airbag sensor assembly, front airbag sensors, side and curtain shield airbag sensor assemblies, curtain shield airbag sensor assemblies, driver's seat position sensor, driver's seat belt buckle switch, front passenger occupant classification system, "AIR BAG ON" indicator light, "AIR BAG OFF" indicator light, front passenger's seat belt buckle switch, seat belt pretensioner assemblies, inflators, warning light, interconnecting wiring and power sources. (For details, see "Service reminder indicators and warning buzzers" on page 107.)

If any of the following conditions occurs, this indicates a malfunction of the airbags or seat belt pretensioners. Contact your Scion dealer as soon as possible.

- When the engine switch is turned to the "ON" position, the light does not come on or remains on for more than 6 seconds.
- The light comes on while driving.

The SRS warning light and "AIR BAG OFF" indicator light will come on if there is a malfunction in the front passenger occupant classification system.

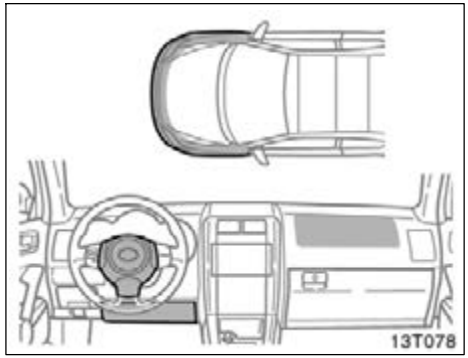

In the following cases, contact your Scion dealer as soon as possible:

- The SRS front airbags have been inflated.
- The front of the vehicle (shaded in the illustration) was involved in an accident that was not severe enough to cause the SRS front airbags to inflate.
- The pad section of the steering wheel or front passenger airbag cover (shaded in the illustration) is scratched, cracked, or otherwise damaged.

NOTICE

Do not disconnect the battery cables before contacting your Scion dealer.

SRS side airbags and curtain shield airbags

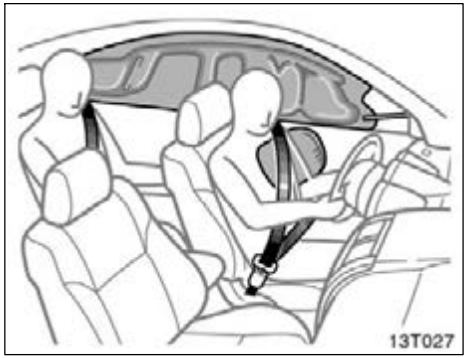

The SRS (Supplemental Restraint System) side airbags and curtain shield airbags are designed to provide further protection for the driver, front passenger and rear outside passengers in addition to the primary safety protection provided by the seat belts.

In response to a severe side impact, the SRS side airbags and curtain shield airbags work with the seat belts to help reduce injury by inflating. The SRS side airbags help reduce injuries mainly to the driver's or front passenger's chest and the SRS curtain shield airbags help reduce injuries mainly to the driver's, front passenger's or rear outside passenger's head.

The SRS side airbag on the passenger seat will not activate if there is no passenger sitting in the front passenger seat. However, the side airbag on the passenger seat may deploy if luggage is put in the seat, or the seat belt is buckled up regardless of the presence of the occupant in the seat. (As for the front passenger occupant classification system, see "—Front passenger occupant classification system" on page 65.)

The SRS curtain shield airbag on the passenger side are activated even with no passenger in the front seat or rear outside seat.

The SRS curtain shield airbags may activate even when the side airbags are not activated.

Always wear your seat belt properly.

⚠ CAUTION

- **The SRS side airbag and curtain shield airbag system is designed only as a supplement to the primary protection of the driver, front passenger and rear outside passenger seat belt systems. To ensure maximum protection in an accident, the driver and all passengers in the vehicle must wear their seat belts properly. Wearing a seat belt properly during an accident reduces the chances of death or serious injury or being thrown out of the vehicle. For instructions and precautions concerning the seat belt system, see "Seat belts—" on page 40.**

- **Do not allow anyone to lean his/her head or any part of his/her body against the door or the area of the seat, front pillar, rear pillar or roof side rail from which the SRS side airbag and curtain shield airbag deploy even if he/she is a child seated in the child restraint system. It is dangerous if the SRS side airbag and curtain shield airbag inflate, and the impact of the deploying airbags could cause death or serious injury to the occupant.**
- **Improperly seated and/or restrained infants and children can be killed or seriously injured by the deploying airbags. An infant or child who is too small to use a seat belt should be properly secured using a child restraint system. Scion strongly recommends that all infants and children be placed in the rear seats of the vehicle and properly restrained. The rear seats are the safest for infants and children. For instructions concerning the installation of a child restraint system, see "Child restraint—" on page 69.**

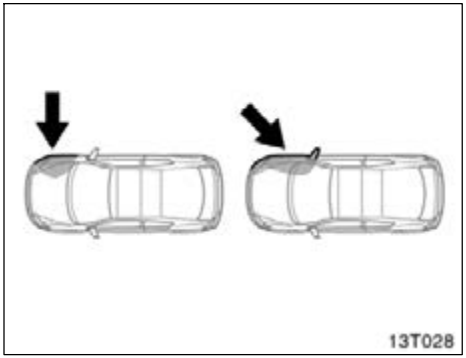

The SRS side airbag and curtain shield airbag system may not activate if the vehicle is subjected to a collision from the side at certain angles, or a collision to the side of the vehicle body other than the passenger compartment as shown in the illustration.

The SRS side airbag and curtain shield airbag are designed to inflate when the passenger compartment area suffers a severe impact from the side.

The SRS side airbags and curtain shield airbags will deploy in the even of an impact that exceeds the set threshold level (the level of force corresponding to the impact force produced by a 1500 kg (3300 lb.) vehicle colliding with the vehicle cabin from a direction perpendicular to the vehicle orientation at a speed of 20–30 km/h (12–19 mph)).

Always wear your seat belts properly.

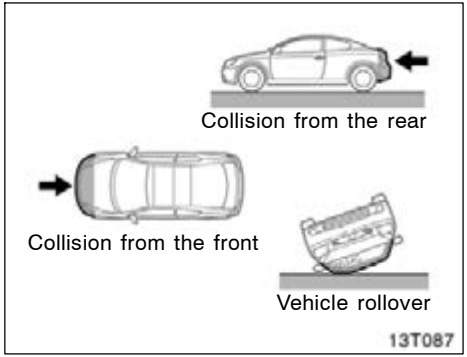

The SRS side airbags and curtain shield airbags are not generally designed to inflate if the vehicle is involved in a front or rear collision, if it rolls over, or if it is involved in a low–speed side collision.

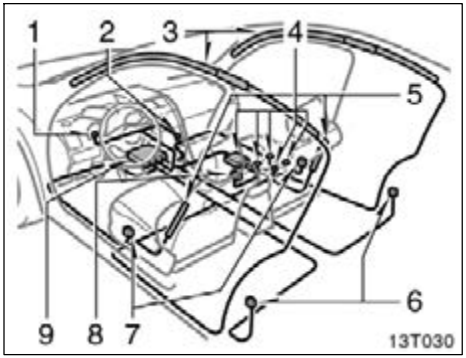

The SRS side airbag and curtain shield airbag system consists mainly of the following components, and their locations are shown in the illustration.

1. SRS warning light
2. “AIR BAG ON” and “AIR BAG OFF” indicator lights
3. Curtain shield airbag modules (airbag and inflator)
4. Front passenger occupant classification system (ECU and sensors)
5. Side airbag modules (airbag and inflator)
6. Curtain shield airbag sensors
7. Side and curtain shield airbag sensors
8. Front passenger’s seat belt buckle switch
9. Airbag sensor assembly

The SRS side airbag and curtain shield airbag system is controlled by the airbag sensor assembly. The airbag sensor assembly consist of a safing sensor and airbag sensor.

In a severe side impact, the side and curtain shield airbag sensor and/or the curtain shield airbag sensor trigger(s) the side airbag inflators and/or the curtain shield airbag inflators. At this time a chemical reaction in the inflators quickly fills the airbags with non–toxic gas to help restrain the lateral motion of the occupants.

When the airbags inflate, they produce a fairly loud noise and release some smoke and residue along with non–toxic gas. This does not indicate a fire.

⚠ CAUTION

The smoke produced when a airbag inflates may remain inside the vehicle for some time, and may cause some minor irritation to the eyes, skin or breathing. Be sure to wash off any residue as soon as possible to prevent any potential skin irritation with soap and water. If you can safely exit from the vehicle, you should do so immediately.

Deployment of the airbags happens in a fraction of a second, so the airbags must inflate with considerable force. While the system is designed to reduce serious injuries, it may also cause minor burns or abrasions and swelling.

Front seats as well as part of the front and rear pillars, and roof side rail may be hot for several minutes, but the airbags themselves will not be hot. The airbags are designed to inflate only once.

⚠ CAUTION

SRS side airbags and curtain shield airbags inflate with considerable force. To reduce the possibility of death or serious injury when they inflate, the driver, front passenger and rear outside passengers must:

- **Wear their seat belts properly.**
- **Remain properly seated with their backs upright and against the seats at all times.**

- **Do not allow anyone to lean against the door when the vehicle is in use, since the side airbag and curtain shield airbag could inflate with considerable speed and force. Otherwise, he/she may be killed or seriously injured. Special care should be taken especially when you have a small child in the vehicle.**

- **Sit up straight and well back in the seat, distributing your weight evenly in the seat. Do not apply excessive weight to the outer side of the seats with a side airbag, and to the front pillar, rear pillar and roof side rail with a curtain shield airbag.**

- Do not allow anyone to get his/her head closer to the area where the side airbag and curtain shield airbag inflate, since these airbags could inflate with considerable speed and force. Otherwise, he/she may be killed or seriously injured. Special care should be taken especially when you have a small child in the vehicle.

- Do not allow anyone to kneel on the passenger seat, facing the passenger's side door, since the side airbag and curtain shield airbag could inflate with considerable speed and force. Otherwise, he/she may be killed or seriously injured. Special care should be taken especially when you have a small child in the vehicle.

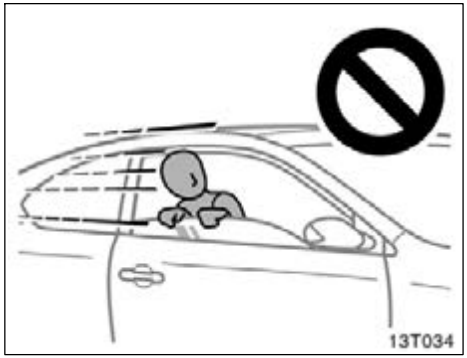

- Do not allow anyone to get his/her head or hands out of windows, since the curtain shield airbags could inflate with considerable speed and force. Otherwise, he/she may be killed or seriously injured. Special care should be taken especially when you have a small child in the vehicle.

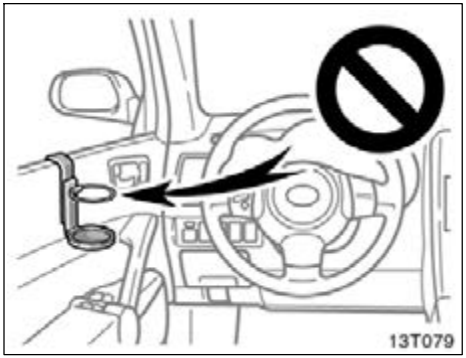

- **Do not attach a cup holder or any other device or object on or around the door. When the side airbag inflates, the cup holder or any other device or object will be thrown with great force or the side airbag may not activate correctly, resulting in death or serious injury. Likewise, the driver and front passenger should not hold objects in their arms or on their knees.**

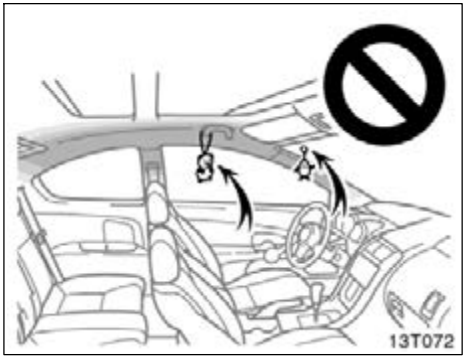

- **Do not attach a microphone or any other device or object around the area where the curtain shield airbag activates such as on the windshield glass, side door glass, front and rear pillars, roof side rail and assist grips. When the curtain shield airbag inflates, the microphone or other device or object will be thrown away with great force or the curtain shield airbag may not activate correctly, resulting in death or serious injury.**

- **Do not hook a hanger, heavy or sharp pointed objects on the coat hook. If the curtain shield airbag inflates, those items will be thrown away with great force or the curtain shield airbag may not activate correctly, resulting in death or serious injury. When you hang clothes, hang them on the coat hook directly.**
- **Do not use seat accessories which cover the parts where the side airbags inflate. Such accessories may prevent the side airbags from activating correctly, causing death or serious injury.**
- **Do not modify or replace the seats or upholstery of the seats with side airbags. Such changes may prevent the side airbag system from activating correctly, disable the system or cause the side airbags to inflate accidentally, resulting in death or serious injury.**

- **Do not disassemble or repair the front and rear pillars and roof side rail containing the curtain shield airbags. Such changes may disable the system or cause the curtain shield airbags to inflate accidentally, resulting in death or serious injury.**

Failure to follow these instructions can result in death or serious injury. Consult your Scion dealer about any repair and modification.

If you wish to modify your vehicle for a person with a physical disability, consult your Scion dealer. It may dangerously interfere with the SRS side airbags and curtain shield airbags operation.

NOTICE

Do not perform any of the following changes without consulting your Scion dealer. Such changes can interfere with proper operation of the SRS side airbag and curtain shield airbag system in some cases.

- ***Installation of electronic devices such as a mobile two–way radio, cassette tape player or compact disc player***
- ***Modification of the suspension system***
- ***Modification of the side structure of the passenger compartment***
- ***Repairs made on or near the console or front seat***

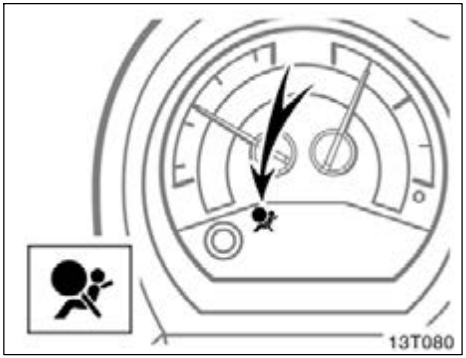

This indicator comes on when the engine switch is turned to the "ON" position. It goes off after about 6 seconds. This means the SRS side airbags and curtain shield airbags are operating properly.

This warning light system monitors the airbag sensor assembly, front airbag sensors, side and curtain shield airbag sensor assemblies, curtain shield airbag sensor assemblies, driver's seat position sensor, driver's seat belt buckle switch, front passenger occupant classification system, "AIR BAG ON" indicator light, "AIR BAG OFF" indicator light, front passenger's seat belt buckle switch, seat belt pretensioner assemblies, inflators, warning light, interconnecting wiring and power sources. (For details, see "Service reminder indicators and warning buzzers" on page 107.)

If any of the following conditions occurs, this indicates a malfunction of the airbags or seat belt pretensioners. Contact your Scion dealer as soon as possible.

- When the engine switch is turned to the "ON" position, the light does not come on or remains on for more than 6 seconds.
- The light comes on while driving.

The SRS warning light and "AIR BAG OFF" indicator light will come on if there is a malfunction in the front passenger occupant classification system.

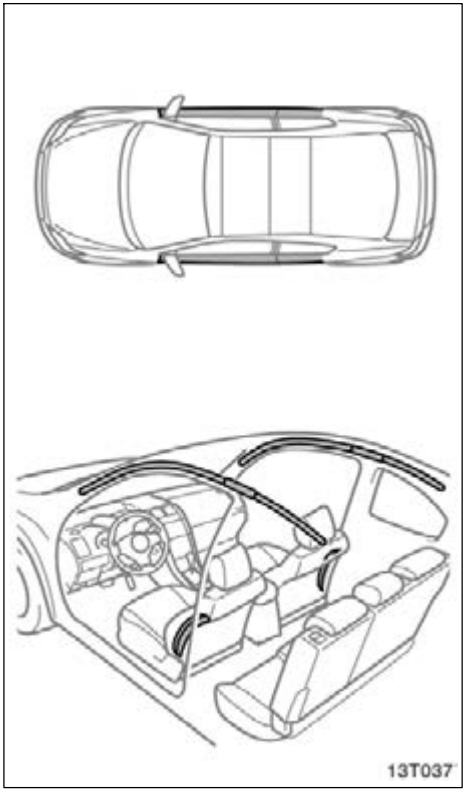

In the following cases, contact your Scion dealer as soon as possible:

- Any of the SRS side airbags and curtain shield airbags have been inflated.
- The portion of the doors (shaded in the illustration) was involved in an accident that was not severe enough to cause the SRS side airbags and curtain shield airbags to inflate.
- The surface of the seats with the side airbag (shaded in the illustration) is scratched, cracked, or otherwise damaged.
- The portion of the front pillars, rear pillars or roof side rail garnishes (padding) containing the curtain shield airbags inside (shaded in the illustration) is scratched, cracked, or otherwise damaged.

NOTICE

Do not disconnect the battery cables before contacting your Scion dealer.

—Front passenger occupant classification system

Your vehicle is equipped with a front passenger occupant classification system. This system detects the conditions 1. through 4. in the table on page 67 and based on these conditions activates or deactivates the following systems;

- Front passenger airbag
- Side airbag on the front passenger seat
- Front passenger's seat belt pretensioner

The system monitors the weight and load on the front passenger seat, and the seat belt buckle switch to determine conditions 1. through 4.

In order for the system to detect the conditions correctly, do not do any of the following:

- Apply a heavy load to the front passenger seat.
- Attach a commercial seatback table, etc. to the front passenger seat seatback.
- Put weight on the front passenger seat by putting your hands or feet on the seatback from the rear passenger seat.

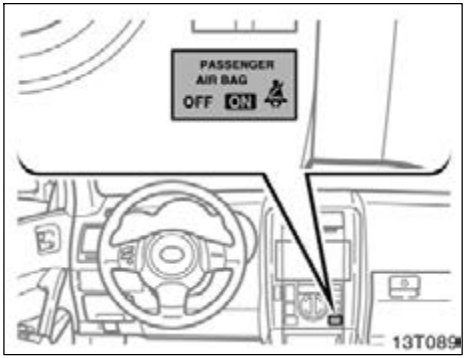

The "AIR BAG ON" and "AIR BAG OFF" indicator lights indicate the actuation of the front passenger airbag, side airbag on the front passenger seat and front passenger's seat belt pretensioner.

The "AIR BAG OFF" indicator light will be illuminated when the engine switch is in the "ON" position with the condition 2 in the table shown below.

If the front passenger occupant classification system determines that a person of adult size sits in the front passenger seat but the "AIR BAG OFF" indicator light is illuminated, one of the following is likely to have occurred:

- A rear passenger lifts the front passenger seat cushion with his/her legs.
- Objects are placed under the front passenger seat.
- The front passenger seatback is in contact with the rear seat.

To ensure the system correctly detects an adult sitting in the front passenger seat, make sure the above do not occur.

Make sure that the "AIR BAG ON" indicator light is illuminated when an adult is seated in the front passenger seat. If the "AIR BAG OFF" indicator light is illuminated, ask the passenger to sit up straight, well back in the seat, and with the seat belt worn correctly. If the "AIR BAG OFF" indicator light still remains illuminated, either ask the passenger to move to the rear seat, or if that is not possible, move the front passenger seat fully rearward.

The “AIR BAG ON” and “AIR BAG OFF” indicator lights will be illuminated initially when the engine switch is turned to the “ON” position. After about four seconds, they will go off. After that, the front passenger occupant classification system operates and judges which indicator light be illuminated.

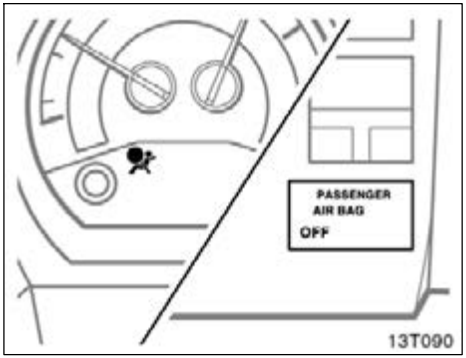

The SRS warning light and “AIR BAG OFF” indicator light will come on if there is a malfunction in the front passenger occupant classification system.

Condition and operation in the front passenger occupant classification system

Condition detected by the front passenger occupant classification system	Indicator/ warning light			Devices			
	"AIR BAG ON" and "AIR BAG OFF" indicator lights	SRS warning light	Front passenger's seat belt reminder light	Front passenger airbag	Side airbag on the front passenger seat	Curtain shield airbag in the front passenger side	Front passenger's seat belt pretensioner
1. Adult*1	"AIR BAG ON"	Off	Flashing*4	Activated			
2. Child*2 or child restraint system*3	"AIR BAG OFF" *5	Off	Flashing*4	Deactivated		Activated	Activated
3. Unoccupied	Not illuminated	Off	Off	Deactivated			Deactivated
4. There is a malfunction in the system	"AIR BAG OFF"	On	Off	Deactivated			Activated

*1: The system judges a person of adult size as an adult. When a smaller adult sits in the front passenger seat, the system may recognize him/her as a child depending on his/her physique and posture.

*2: When a larger child who has outgrown a child restraint system sits in the front passenger seat, the system may recognize him/her as an adult depending on his/her physique or posture.

*3: Never install a rear–facing child restraint system on the front passenger seat. A forward–facing child restraint system should only be installed on the front passenger seat when it is unavoidable. (See "Child restraint" on page 69 as for installing the child restraint system.)

*4: In the event that the front passenger does not wear a seat belt.

*5: In case the indicator is not illuminated, see "Child restraint" on page 69 as for installing the child restraint system properly.

⚠ CAUTION

To avoid potential death or serious injury when the front passenger occupant classification system does not detect the conditions correctly, observe the following:

- **Do not recline the front passenger seat seatback so that it interferes with a rear seat as it may cause the "AIR BAG OFF" indicator light be illuminated. If the seatback interferes with the rear seat, return the seatback to a position where it does not interfere with the rear seat.**

  Keep the front passenger seatback as upright as possible when the vehicle is moving. Reclining the seatback excessively may lessen the effectiveness of the seat belt system.

- **Make sure the "AIR BAG ON" indicator light is illuminated when using the seat belt extender for the front passenger seat. If the "AIR BAG OFF" indicator light is illuminated, disconnect the extender tongue from the seat belt buckle, then reconnect the seat belt. Reconnect the seat belt extender after making sure the "AIR BAG ON" indicator light is illuminated. If you use the seat belt extender while the "AIR BAG OFF" indicator light is illuminated, the front passenger airbag and side airbag on the front passenger side may not activate correctly, which could cause death or serious injury in the event of collision.**

- **If an adult sits in the front passenger seat, the "AIR BAG ON" indicator light should be illuminated. If the "AIR BAG OFF" indicator light is illuminated, ask the passenger to sit up straight, well back in the seat, feet on the floor, and with the seat belt worn correctly. If the "AIR BAG OFF" indicator still remains illuminated, either ask the passenger to move to the rear seat, or if that is not possible, move the front passenger seat fully rearward.**
- **Wear the seat belt properly.**
- **Make sure the front passenger's seat belt tab has not been left inserted into the buckle before someone sits in the front passenger seat.**
- **Do not apply a heavy load to the front passenger seat or equipment (e.g. seatback pocket).**

- **Do not put weight on the front passenger seat by putting your hands or feet on the front passenger seatback from the rear passenger seat.**
- **Do not let a rear passenger lift the front passenger seat with their feet or press on the seatback with their legs.**
- **Do not put objects under the front passenger seat.**
- **Child restraint systems installed on the rear seat should not contact the front seatbacks.**
- **When it is unavoidable to install the forward–facing child restraint system on the front passenger seat, install the child restraint system on the front passenger seat in the proper order. (As for the installation order, see "—Child restraint system" on page 71.)**

- **Do not remove the seat.**
- **Do not kick the front passenger seat or subject it to severe impact. Otherwise, the SRS warning light may come on to indicate a malfunction of the detection system. In this case, contact your Scion dealer immediately.**

The "AIR BAG ON" indicator light may be illuminated (the front passenger airbag and side airbag on the front passenger seat may deploy) even if observing the above cautions, when a child sits in, or a forward–facing child restraint system is installed on the front passenger seat. Refer to all the cautions in "SRS airbags" on page 48 and "Child restraint" on page 69.

Child restraint—
—Child restraint precautions

Scion strongly urges the use of appropriate child restraint systems for children.

The laws of all 50 states in the U.S.A. now require the use of a child restraint system.

Your vehicle conforms to SAE J1819.

If a child is too large for a child restraint system, the child should sit in the rear seat and must be restrained using the vehicle's seat belt. See "Seat belts" on page 40 for details.

⚠ CAUTION

- **For effective protection in automobile accidents and sudden stops, a child must be properly restrained, using a seat belt or child restraint system depending on the age and size of the child. Holding a child in your arms is not a substitute for a child restraint system. In an accident, the child can be crushed against the windshield, or between you and the vehicle's interior.**

- Scion strongly urges use of a proper child restraint system which conforms to the size of the child, installed on the rear seat. According to accident statistics, the child is safer when properly restrained in the rear seat than in the front seat.
- Never install a rear–facing child restraint system on the front passenger seat even if the “AIR BAG OFF” indicator light is illuminated. In the event of an accident, the force of the rapid inflation of the front passenger airbag can cause death or serious injury to the child if the rear–facing child restraint system is put on the front passenger seat.
- A forward–facing child restraint system should be allowed to be installed on the front passenger seat only when it is unavoidable. Always move the seat as far back as possible even if the “AIR BAG OFF” indicator light is illuminated, because the front passenger airbag could inflate with considerable speed and force. Otherwise, the child may be killed or seriously injured.

- Do not allow the child to lean his/her head or any part of his/her body against the door or the area of the seat, front or rear pillar or roof side rail from which the side airbags or curtain shield airbags deploy even if the child is seated in the child restraint system. It is dangerous if the side airbag and curtain shield airbag inflate, and the impact could cause death or serious injury to the child.
- Do not use the seat belt extender when installing a child restraint system on the front or rear passenger seat. If installing a child restraint system with the seat belt extender connected to the seat belt, the seat belt will not securely hold the child restraint system, which could cause death or serious injury to the child or other passengers in the event of collision.

- Make sure you have complied with all installation instructions provided by the child restraint manufacturer and that the system is properly secured. If it is not secured properly, it may cause death or serious injury to the child in the event of a sudden stop, sudden swerve or accident.
- Do not allow children to play with the child restraint lock function belt. If the belt becomes twisted around a child’s neck, it will not be possible to pull the belt out leading to choking or other serious injuries that could result in death.
  If this occurs and the buckle cannot be unfastened, scissors should be used to cut the belt.

—Child restraint system

A child restraint system for a small child or baby must itself be properly restrained on the seat with the lap portion of the lap/shoulder belt. You must carefully consult the manufacturer's instructions which accompany the child restraint system.

To provide proper restraint, use a child restraint system following the manufacturer's instructions about the appropriate age and size of the child for the child restraint system.

Install the child restraint system correctly following the instructions provided by its manufacturer. General directions are also provided under the following illustrations.

The child restraint system should be installed on the rear seat. According to accident statistics, the child is safer when properly restrained in the rear seat than in the front seat.

⚠ CAUTION

When the child restraint system is not in use:

- **Keep the child restraint system properly secured on the seat even if it is not in use. Do not store the restraint unsecured in the passenger compartment.**
- **If it is necessary to detach the child restraint system, remove it from the vehicle or store it securely in the luggage compartment.**

  This will prevent it from injuring passengers in the event of a sudden stop, sudden swerve or accident.

—Types of child restraint system

Child restraint systems are classified into the following 3 types depending on the child's age and size.

(A) Infant seat

(B) Convertible seat

(C) Booster seat

Install the child restraint system following the instructions provided by its manufacturer.

Your vehicle has anchor brackets for securing the top strap of a child restraint system.

For instructions about how to use the anchor bracket, see "—Using a top strap" on page 83.

The child restraint lower anchorages approved for your vehicle may also be used. See "—Installation with child restraint lower anchorages" on page 85.

(A) Infant seat

(B) Convertible seat

(C) Booster seat

—Installation with seat belt

(A) INFANT SEAT INSTALLATION

An infant seat must be used in rear–facing position only.

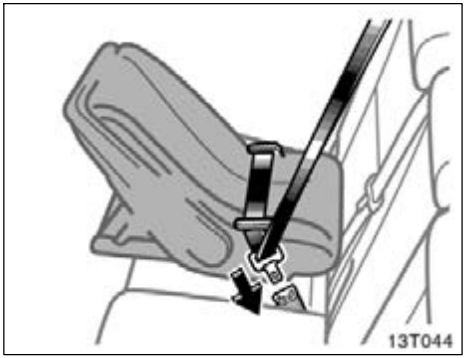

⚠ CAUTION

- **Never install a rear–facing child restraint system on the front passenger seat even if the "AIR BAG OFF" indicator light is illuminated. In the event of an accident, the force of the rapid inflation of the front passenger airbag can cause death or serious injury to the child if the rear–facing child restraint system is installed on the front passenger seat.**

- **Do not install a child restraint system on the rear seat if it interferes with the lock mechanism of the front seats. Otherwise, the child or front seat occupant(s) may be killed or seriously injured in the event of sudden braking, sudden swerve or a collision.**
- **If the driver's seat position does not allow sufficient space for safe installation, install the child restraint system on the rear right seat. Child restraint system installed on the rear seat should not contact the front seatbacks.**

1. Run the lap and shoulder belt through or around the infant seat following the instructions provided by its manufacturer and insert the tab into the buckle taking care not to twist the belt. Keep the lap portion of the belt tight.

⚠ CAUTION

- **After inserting the tab, make sure the tab and buckle are locked and that the lap and shoulder portions of the belt are not twisted.**
- **Do not insert coins, clips, etc. in the buckle as this may prevent your child from properly latching the tab and buckle.**
- **If the seat belt does not function normally, it cannot protect your child from death or serious injury. Contact your Scion dealer immediately. Do not install the child restraint system on the seat until the seat belt is fixed.**

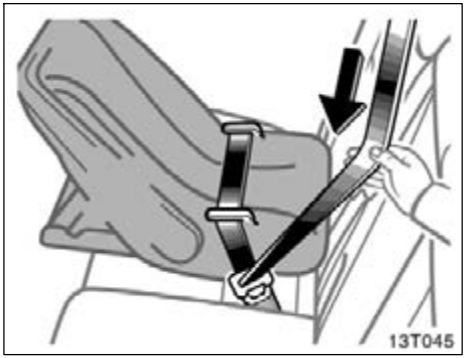

2. Fully extend the shoulder belt to put it in the lock mode. When the belt is then retracted even slightly, it cannot be extended.

To hold the infant seat securely, make sure the belt is in the lock mode before letting the belt retract.

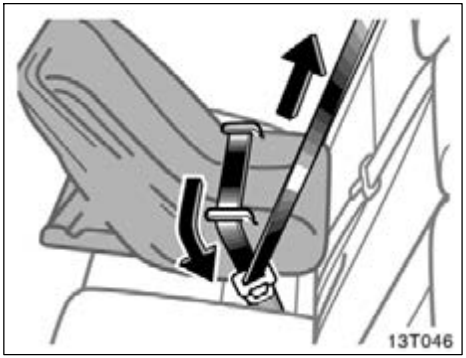

3. While pressing the infant seat firmly against the seat cushion and seatback, let the shoulder belt retract as far as it will go to hold the infant seat securely.

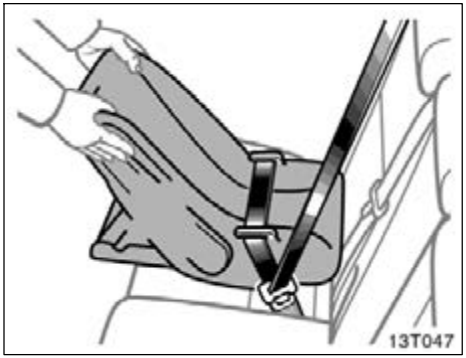

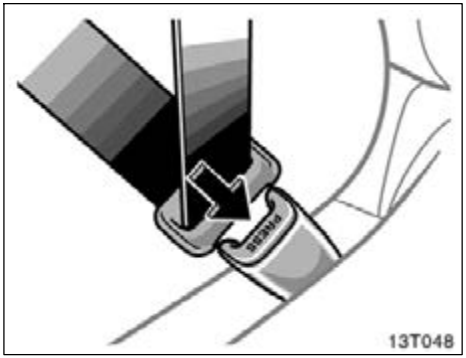

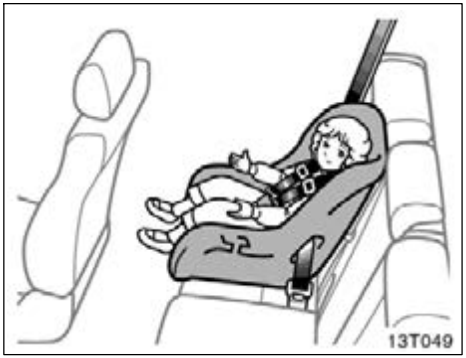

⚠ CAUTION

Push and pull the child restraint system in different directions to be sure it is secure. Follow all the installation instructions provided by its manufacturer.

4. To remove the infant seat, press the buckle release button and allow the belt to retract completely. The belt will move freely again and be ready to work for an adult or older child passenger.

(B) CONVERTIBLE SEAT INSTALLATION

A convertible seat must be used in forward–facing or rear–facing position depending on the age and size of the child. When installing, follow the manufacturer's instructions about the appropriate age and size of the child as well as directions for installing the child restraint system.

Install the child restraint system on the front passenger seat only when it is unavoidable. Your vehicle is equipped with a front passenger occupant classification system. In order to activate the occupant classification system correctly, install the forward–facing child restraint system on the front passenger seat in the following order:

1. Turn the engine switch to the “ON” position.
2. Move the front passenger seat to the rearward position.
3. Put the child restraint system on the front passenger seat without putting your weight on the front passenger seat.
4. Insert the seat belt tab into the seat belt buckle.
5. Fully extend the shoulder belt to put it in the lock mode. When the belt is then retracted even slightly, it cannot be extended. To hold the seat securely, make sure the belt is in the lock mode before letting the belt retract.
6. While pressing the convertible seat firmly against the seat cushion and seatback, let the shoulder belt retract as far as it will go to hold the convertible seat securely.

⚠ CAUTION

Push and pull the child restraint system in different directions to be sure it is secure. Follow all the installation instructions provided by its manufacturer.

7. Put a child on the child restraint system and secure the child, complying with the instructions provided by the child restraint system manufacturer.

The “AIR BAG OFF” indicator light should be illuminated when the engine switch is “ON” and the child is in the child restraint system after following these procedures. The “AIR BAG OFF” indicator light indicates the SRS front passenger airbag and side airbag on the passenger side will not deploy. If the “AIR BAG ON” indicator light is illuminated, remove the child restraint system and reinstall it with the engine switch in the “ACC” or “LOCK” position. If the “AIR BAG ON” indicator light is illuminated when the engine switch is turned to the “ON” position, then the SRS front passenger airbag and side airbag on the passenger side may deploy in an accident. Do not drive the vehicle in this condition. Remove the child restraint system and contact your Scion dealer.

⚠ CAUTION

Never install a rear–facing child restraint system on the front passenger seat. A forward–facing child restraint system should only be installed on the front passenger seat when unavoidable. If you must install the child restraint system on the front passenger seat, put the seat in its most rearward position, and install the forward–facing child restraint system in the proper order. Otherwise, the front passenger occupant classification system cannot detect the presence of the child restraint system and the front passenger airbag and side airbag on the front passenger seat could deploy, and the impact could cause death or serious injury to the child.

- **Never install a rear–facing child restraint system on the front passenger seat even if the "AIR BAG OFF" indicator light is illuminated. In the event of an accident, the force of the rapid inflation of the front passenger airbag can cause death or serious injury to the child if the rear–facing child restraint system is installed on the front passenger seat.**

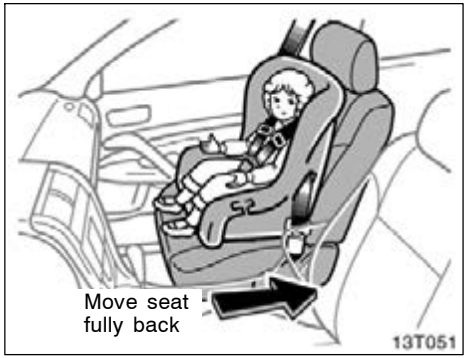

- **A forward–facing child restraint system should be allowed to be installed on the front passenger seat only when it is unavoidable. Always move the seat as far back as possible even if the "AIR BAG OFF" indicator light is illuminated, because the front passenger airbag could inflate with considerable speed and force. Otherwise, the child may be killed or seriously injured.**

- **Do not allow the child to lean his/her head or any part of his/her body against the door or the area of the seat, front or rear pillar or roof side rail from which the side airbags or curtain shield airbags deploy even if the child is seated in the child restraint system. It is dangerous if the side airbag and curtain shield airbag inflate, and the impact could cause death or serious injury to the child.**

- **Do not install a child restraint system on the rear seat if it interferes with the lock mechanism of the front seats. Otherwise, the child or front seat occupant(s) may be killed or seriously injured in the event of sudden braking, sudden swerve or a collision.**
- **If the driver's seat position does not allow sufficient space for safe installation, install the child restraint system on the rear right seat. Child restraint system installed on the rear seat should not contact the front seatbacks.**

1. Run the lap and shoulder belt through or around the convertible seat following the instructions provided by its manufacturer and insert the tab into the buckle taking care not to twist the belt. Keep the lap portion of the belt tight.

⚠ CAUTION

- **After inserting the tab, make sure the tab and buckle are locked and that the lap and shoulder portions of the belt are not twisted.**
- **Do not insert coins, clips, etc. in the buckle as this may prevent your child from properly latching the tab and buckle.**
- **If the seat belt does not function normally, it cannot protect your child from death or serious injury. Contact your Scion dealer immediately. Do not install the child restraint system on the seat until the seat belt is fixed.**

2. Fully extend the shoulder belt to put it in the lock mode. When the belt is then retracted even slightly, it cannot be extended.

To hold the convertible seat securely, make sure the belt is in the lock mode before letting the belt retract.

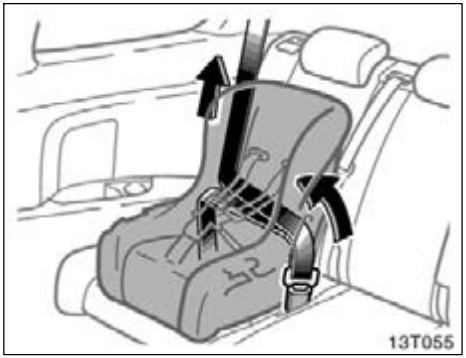

3. While pressing the convertible seat firmly against the seat cushion and seatback, let the shoulder belt retract as far as it will go to hold the convertible seat securely.

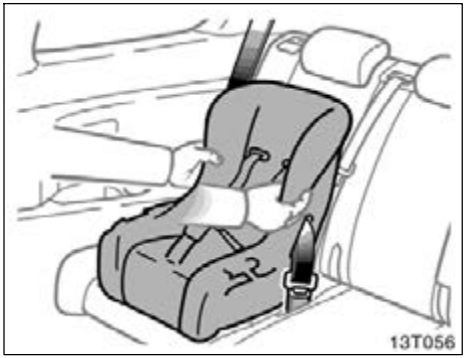

⚠ CAUTION

Push and pull the child restraint system in different directions to be sure it is secure. Follow all the installation instructions provided by its manufacturer.

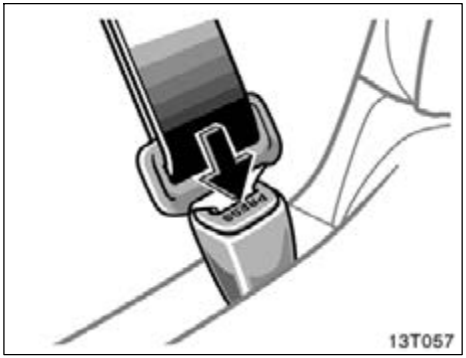

4. To remove the convertible seat, press the buckle release button and allow the belt to retract completely. The belt will move freely again and be ready to work for an adult or older child passenger.

(C) BOOSTER SEAT INSTALLATION

A booster seat must be used in forward–facing position only.

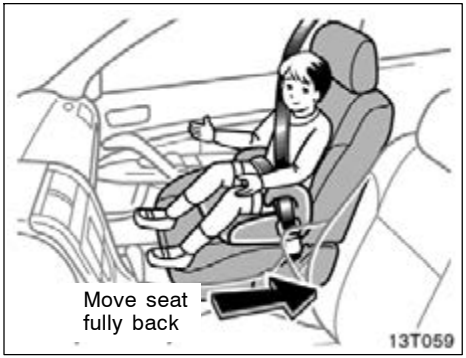

⚠ CAUTION

- **A forward–facing child restraint system should be allowed to be installed on the front passenger seat only when it is unavoidable. Always move the seat as far back as possible even if the "AIR BAG OFF" indicator light is illuminated, because the front passenger airbag could inflate with considerable speed and force. Otherwise, the child may be killed or seriously injured.**

- **Do not allow the child to lean his/her head or any part of his/her body against the door or the area of the seat, front or rear pillar or roof side rail from which the side airbags or curtain shield airbags deploy even if the child is seated in the child restraint system. It is dangerous if the side airbag and curtain shield airbag inflate, and the impact could cause death or serious injury to the child.**

1. Sit the child on a booster seat. Run the lap and shoulder belt through or around the booster seat and across the child following the instructions provided by its manufacturer and insert the tab into the buckle, taking care not to twist the belt.

Make sure the shoulder belt is correctly across the child's shoulder and that the lap belt is positioned as low as possible on the child's hips. See "Seat belts" on page 40 for details.

⚠ CAUTION

- **Always make sure the shoulder belt is positioned across the center of child's shoulder. The belt should be kept away from child's neck, but not falling off the child's shoulder. Otherwise, the child may be killed or seriously injured in the event of sudden braking, sudden swerve or a collision.**
- **Both high–positioned lap belts and loose–fitting belts could cause death or serious injuries due to sliding under the lap belt during a collision or other unintended event. Keep the lap belt positioned as low on a child's hips as possible.**
- **For child's safety, do not place the shoulder belt under the child's arm.**
- **After inserting the tab, make sure the tab and buckle are locked and that the lap and shoulder portions of the belt are not twisted.**
- **Do not insert coins, clips, etc. in the buckle as this may prevent your child from properly latching the tab and buckle.**

- **If the seat belt does not function normally, it cannot protect your child from death or serious injury. Contact your Scion dealer immediately. Do not install the child restraint system on the seat until the seat belt is fixed.**

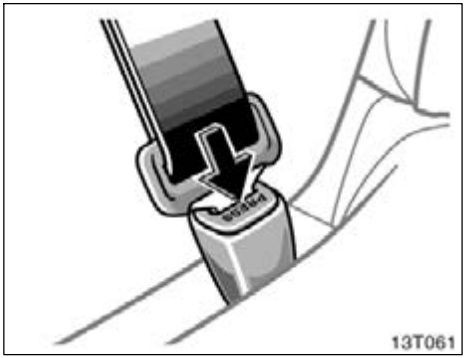

2. To remove the booster seat, press the buckle release button and allow the belt to retract.

—Using a top strap

Follow the procedure below for a child restraint system that requires the use of a top strap.

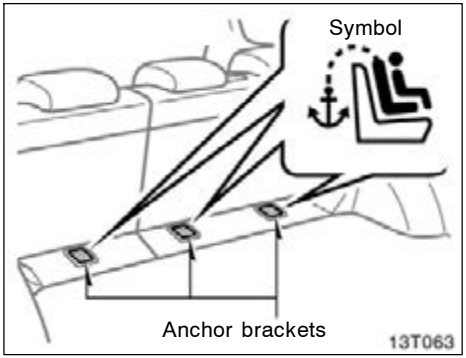

Use the anchor brackets in the luggage compartment to attach the top strap.

Anchor brackets are installed for each rear seating positions.

This symbol indicates the location of the anchor brackets.

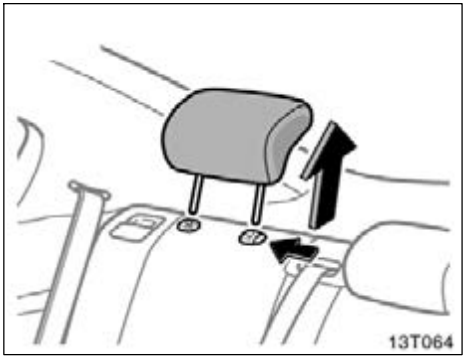

TO USE THE ANCHOR BRACKET:

1. Remove the head restraint.

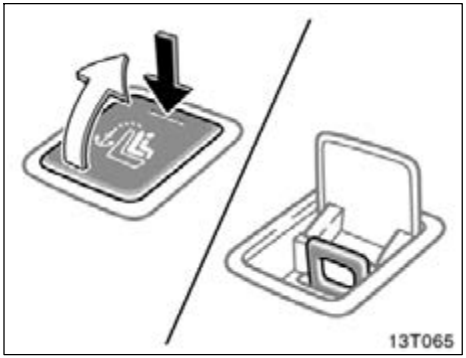

2. **Push the lid of the anchor bracket to open it.**

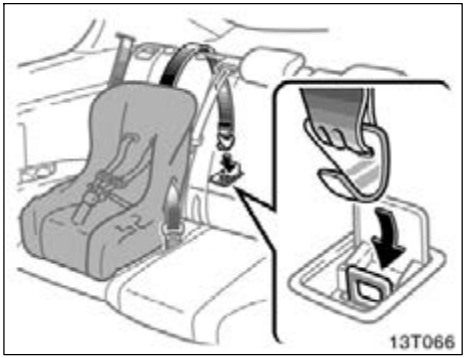

3. **Fix the child restraint system with the seat belt.**
4. **Latch the hook onto the anchor bracket and tighten the top strap.**

For instructions to install the child restraint system, see “Child restraint” on page 69.

⚠ CAUTION

Make sure the top strap is securely latched, and check that the child restraint system is secure by pushing and pulling it in different directions. Follow all the installation instructions provided by its manufacturer.

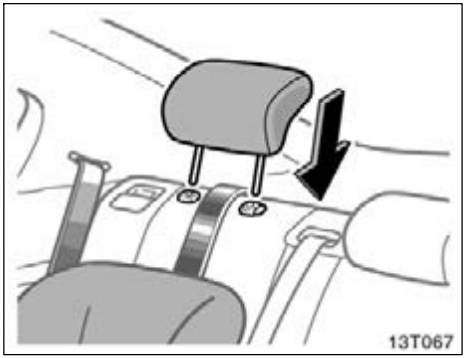

5. **Replace the head restraint.**

Be sure to close the lid when the anchor bracket is not in use.

—Installation with child restraint lower anchorages

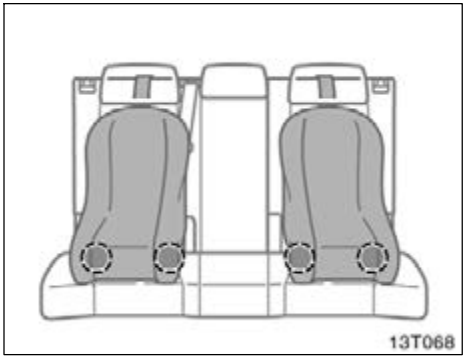

Lower anchorages for the child restraint systems complying with the FMVSS225 specifications are installed in the rear seat.

The anchorages are installed behind the slits in the seat cushion of both outside rear seats.

Child restraint system complying with the FMVSS213 specification can be fixed to these anchorages. In this case, it is not necessary to fix the child restraint system with a seat belt on the vehicle.

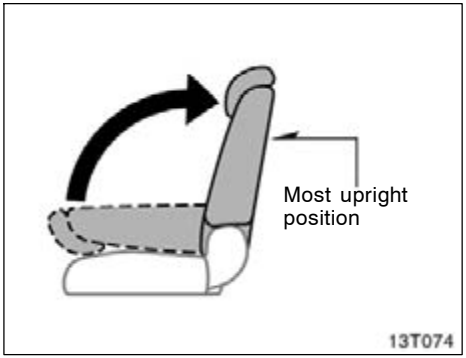

CHILD RESTRAINT SYSTEM INSTALLATION

1. **Fold down the seatback and back to the most upright position until it locks into place.**

Make sure the seatback is locked securely.

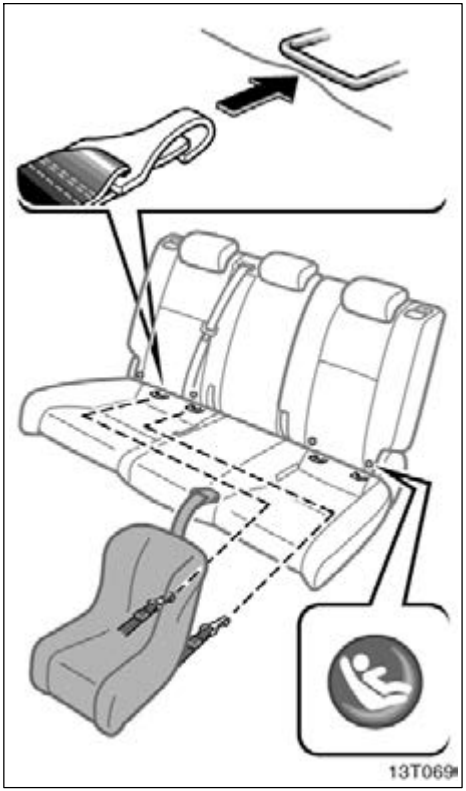

Type A

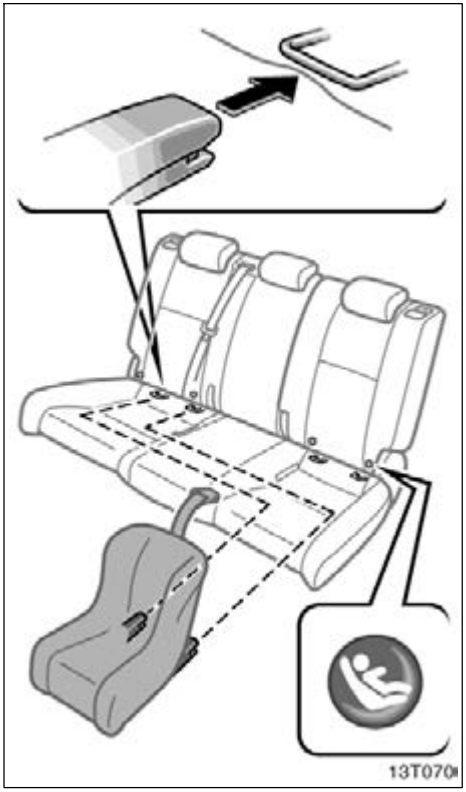

Type B

2. **Widen the slits in the seat cushion slightly and confirm the position of the lower anchorages below the button in the seatback.**
3. **Type A—Latch the hooks of lower straps onto the anchorages and tighten the lower straps.**

   Type B—Latch the buckles onto the anchorages.

If your child restraint system has a top strap, it should be anchored. (For the installation of the top strap, see "—Using a top strap" on page 83.)

For installation details, refer to the instruction manual equipped with each product.

⚠ CAUTION

- **When using the lower anchorages for the child restraint system, be sure that there are no irregular objects around the anchorages or that the seat belt is not caught.**
- **Push and pull the child restraint system in different directions to be sure it is secure. Follow all the installation instructions provided by its manufacturer.**
- **Do not install a child restraint system on the rear seat if it interferes with the lock mechanism of the front seats. Otherwise, the child or front seat occupant(s) may be killed or seriously injured in case of sudden braking or a collision.**

OPERATION OF INSTRUMENTS AND CONTROLS

Steering wheel and Mirrors

Tilt steering wheel 88
Outside rear view mirrors 88
Anti–glare inside rear view mirror 90
Sun visors 90

Tilt steering wheel

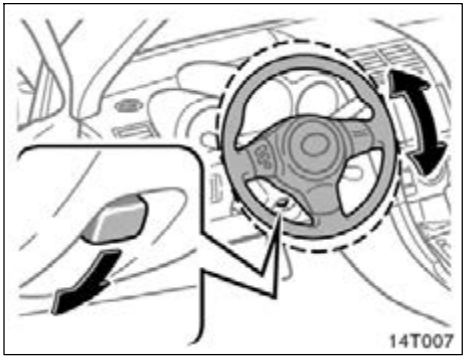

To change the steering wheel angle, hold the steering wheel, push down the lock release lever, tilt the steering wheel to the desired angle and return the lever to its original position.

⚠ CAUTION

- **Do not adjust the steering wheel while the vehicle is moving. Doing so may cause the driver to mishandle the vehicle and an accident may occur resulting in death or serious injuries.**
- **After adjusting the steering wheel, try moving it up and down to make sure it is locked in position.**

Outside rear view mirrors—

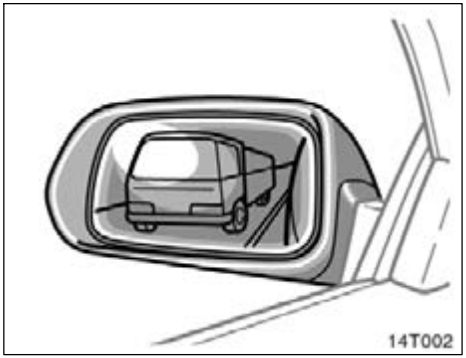

Adjust the mirror so that you can just see the side of your vehicle in the mirror.

Be careful when judging the size or distance of any object seen in the outside rear view mirror on the passenger's side because it is a convex mirror. Any object seen in a convex mirror will look smaller and farther away than when seen in a flat mirror.

—Power rear view mirror control

⚠ CAUTION

Do not adjust the mirror while the vehicle is moving. Doing so may cause the driver to mishandle the vehicle and an accident may occur resulting in death or serious injuries.

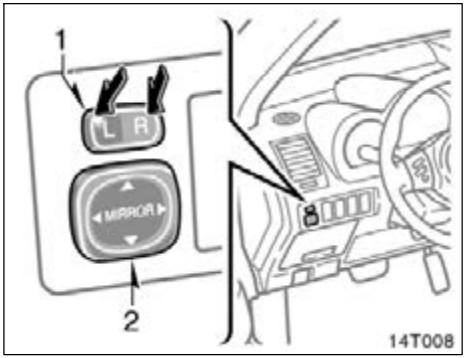

To adjust mirror, use the switches.

1. Master switch—To select the mirror to be adjusted
   Push the switch to “L” (left) or “R” (right).
2. Control switch—To move the mirror
   Push the switch in the desired direction.

Mirrors can be adjusted when the engine switch is in the “ACC” or “ON” position.

NOTICE

If ice should jam the mirror, do not operate the control or scrape the mirror face. Use a spray de–icer to free the mirror.

Anti–glare inside rear view mirror

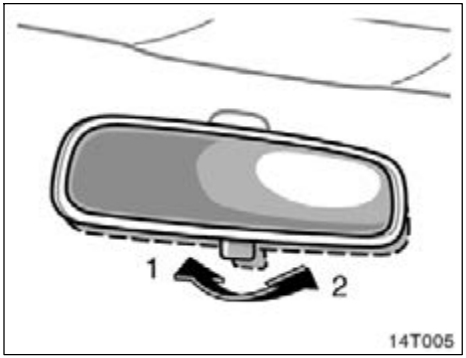

Adjust the mirror so that you can just see the rear of your vehicle in the mirror.

To reduce glare from the headlights of the vehicle behind you during night driving, operate the lever on the lower edge of the mirror.

Daylight driving—Lever at position 1

The reflection in the mirror has greater clarity at this position.

Night driving—Lever at position 2

Remember that by reducing glare you also lose some rear view clarity.

⚠ CAUTION

Do not adjust the mirror while the vehicle is moving. Doing so may cause the driver to mishandle the vehicle and an accident may occur resulting in death or serious injuries.

Sun visors—

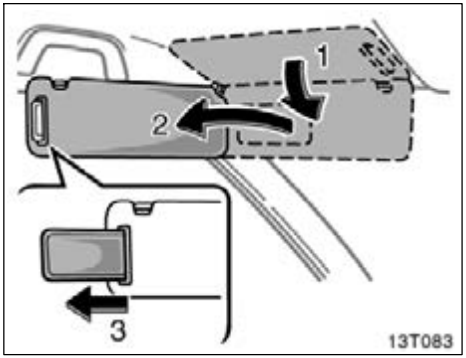

To block out glare, move the sun visor.

To block out glare from the front—Swing down the sun visor (position 1).

To block out glare from the side—Swing down the sun visor, remove it from the hook and swing it to the lateral side (position 2).

If glare comes from obliquely behind you, extend the plate at the end of the visor (position 3).

⚠ CAUTION

Do not extend the plate at the end of the sun visor when the visor is in the position 1. It can cover the anti–glare inside rear view mirror and obstruct the rear view.

—Vanity mirrors

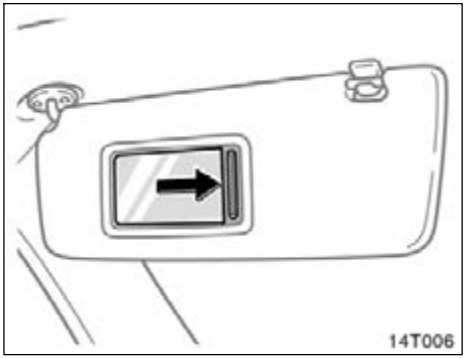

To use the vanity mirror, swing down the sun visor and slide the cover.

OPERATION OF INSTRUMENTS AND CONTROLS

Lights, Wipers and Defogger

Headlights and turn signals 94
Emergency flashers 95
Instrument panel light control 96
Interior lights 96
Engine (ignition) switch light 97
Personal lights 98
Luggage compartment light 98
Windshield wipers and washer 98
Shifting the windshield wiper position 99
Rear window defogger 101

Headlights and turn signals

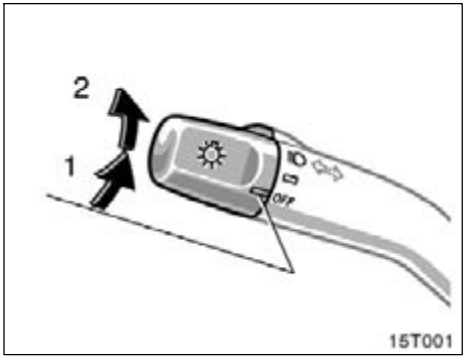

HEADLIGHTS

To turn on the following lights: Twist the headlight/turn signal lever knob.

Position 1—Parking, tail, license plate, side marker and instrument panel lights

Position 2—Headlights and all of the above

Automatic light cut off system

If the engine switch is turned to “LOCK” or “ACC” position and the driver’s door is opened with the headlight switch is on, the light will be extinguished.

With the driver’s door opened, turn the ignition on or once turn the headlight switch off and then on, the lights will turn on. In this case, the automatic light cut off system will not function, so the lights will remain on. Turn off the lights if they are not needed.

NOTICE

To prevent the battery from being discharged, do not leave the lights on longer then necessary when the engine is not running.

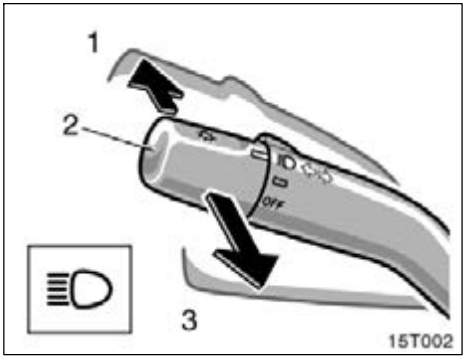

High–Low beams—For high beams, turn the headlights on and push the lever away from you (position 1). Pull the lever toward you (position 2) for low beams.

The headlight high beam indicator light (blue light) on the instrument panel will tell you that the high beams are on.

Flashing the high beam headlights (position 3)—Pull the lever all the way back. The high beam headlights turn off when you release the lever.

The high beam flasher works even when the headlight switch is off.

Emergency flashers

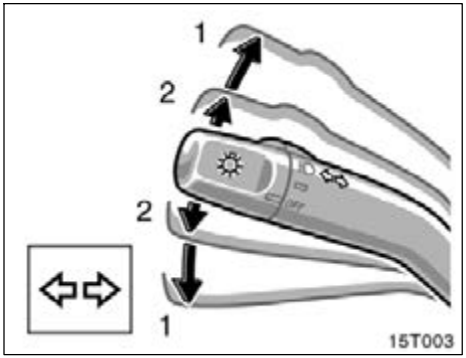

TURN SIGNALS

To signal a turn, push the headlight/turn signal lever up or down to position 1.

The engine switch must be in the “ON” position.

The lever automatically returns after you make a turn, but you may have to return it by hand after you change lanes.

To signal a lane change, move the lever up or down to the pressure point (position 2) and hold it.

If the turn signal indicator lights (green lights) on the instrument panel flash faster than normal, a front or rear turn signal bulb is burned out. See “Replacing light bulbs” on page 255.

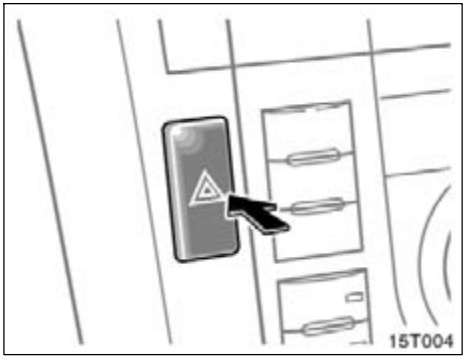

To turn on the emergency flashers, push the switch.

All the turn signal lights will flash. To turn them off, push the switch once again.

Turn on the emergency flashers to warn other drivers if your vehicle must be stopped where it might be a traffic hazard.

Always pull as far off the road as possible.

The turn signal light switch will not work when the emergency flashers are operating.

NOTICE

To prevent the battery from being discharged, do not leave the switch on longer than necessary when the engine is not running.

Instrument panel light control

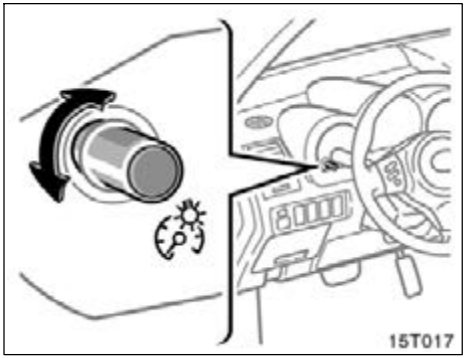

To adjust the brightness of the instrument panel lights, turn the knob.

Interior lights

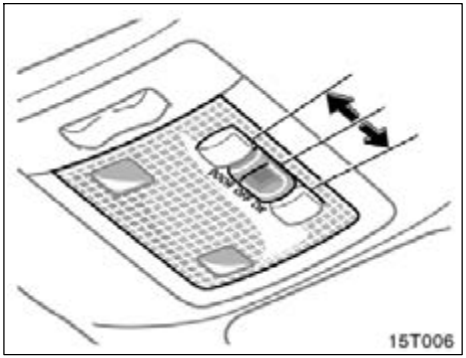

Front

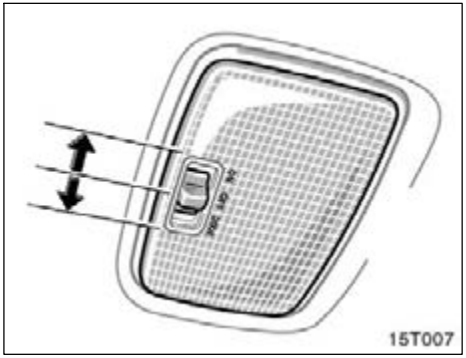

Rear

To turn on the interior light, slide the switch.

The interior light switch has the following positions:

“ON”—Keeps the light on all the time.

“OFF”—Turns the light off.

“DOOR”—Turns the light on when any door is opened. The light goes off when all the doors are closed.

ILLUMINATED ENTRY SYSTEM

When the switch is in the “DOOR” position and any of the side doors and back door is opened, the light will come on. After side doors and back door are closed, the light remains on for about 15 seconds before fading out.

However, in the following cases, the light fades out immediately.

- Side doors and back door are closed when the engine switch is in the “ON” position.
- Side doors and back door are closed and locked.

When side doors and back door are unlocked using either the key or the wireless remote control function, the interior light will come on and remain on for about 15 seconds before fading out.

Engine (ignition) switch light

To prevent the battery from being discharged, the light will automatically turn off when the key is removed and the door is left opened with the switch at the “DOOR” position for 20 minutes or more.

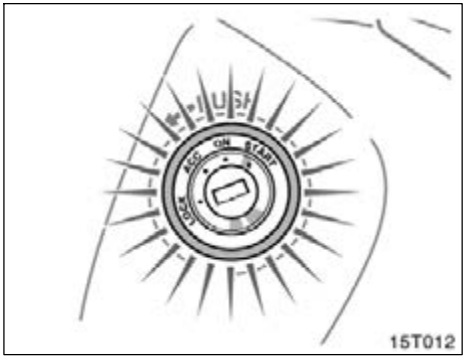

For easy access to the engine switch, the engine switch light comes on when any of the side doors and back door is opened.

The light remains on for about 15 seconds after all the doors are closed.

However, in the following cases, the light goes off immediately.

- Side doors and back door are closed when the engine switch is in the “ON” position.
- Side doors and back door are closed and locked.

When side doors and back door are unlocked using either the key or the wireless remote control function, the engine switch light will come on and remain on for about 15 seconds before fading out.

To prevent the battery from being discharged, the light will automatically turn off when the key is removed and the door is left opened with the switch at the “DOOR” position for 20 minutes or more.

Personal lights

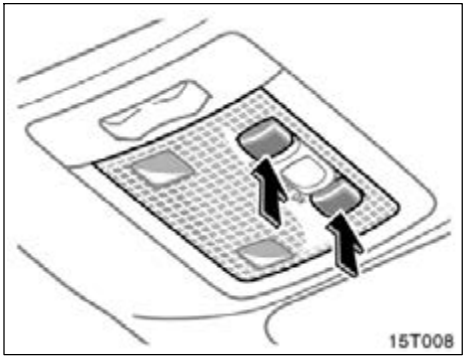

To turn on the front personal lights, push the switches. To turn the lights off, push the switches once again.

Luggage compartment light

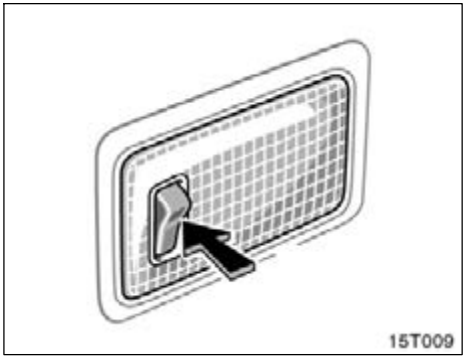

To turn on the luggage compartment light, push the switch upwards. To turn it off, push the switch downwards.

Even if you push the switch upwards, the light turns off automatically when you close the back door.

Windshield wipers and washer

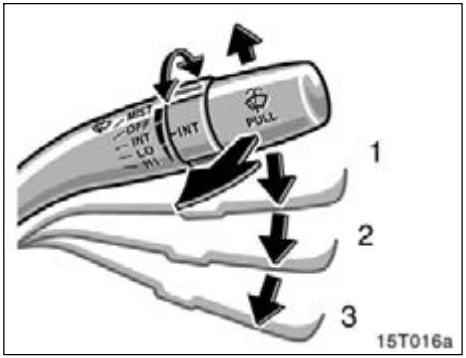

To turn on the windshield wipers, move the lever to the desired setting.

The engine switch must be in the “ON” position.

Lever position	Speed setting
Position 1	Intermittent
Position 2	Slow
Position 3	Fast

For a single sweep of the windshield, push the lever up and release it.

With interval adjuster: The “INT” band lets you adjust the wiping time interval when the wiper lever is in the intermittent position (position 1). Twist the band upward to increase the time between sweeps, and downward to decrease it.

To squirt washer fluid, pull the lever toward you.

If the windshield wipers are off, they will operate a couple of times after the washer squirts.

For instructions on adding washer fluid, see “Adding washer fluid” on page 255.

In freezing weather, warm the windshield with the defroster before using the washer. This will help prevent the washer fluid from freezing on your windshield, which can block your vision.

NOTICE

Do not operate the wipers if the windshield is dry. It may scratch the glass.

When waxing your vehicle, make sure that the washer nozzles do not become blocked. If a nozzle becomes blocked, contact your Scion dealer to have the vehicle serviced.

NOTICE

If a nozzle becomes blocked, do not try to clear it with a pin or other object. The nozzle will be damaged.

Shifting the windshield wiper position

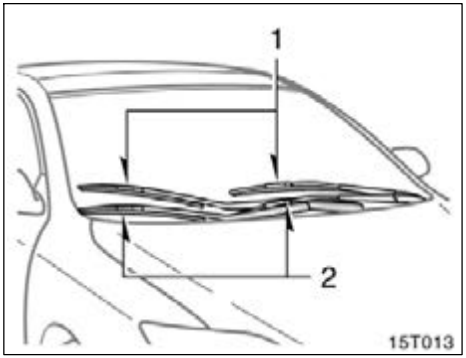

This vehicle is equipped with a wiper rest position changing mechanism.

1. **Upper position**
2. **Standard position**

When the retraction may be obstructed by snow etc., at the bottom of the windshield, the wipers should be shifted from the retracted position to the rest position.

Changing the wiper rest position can be difficult if there is a build–up of snow. Also, if the wipers are in the upper rest position, it will be more difficult for the wiper blades to make contact with the glass.

If the wipers are operated from their standard position, and there is a build–up of snow on the wipers, the wipers are designed to automatically change to the upper position for winter. Depending on the amount of accumulated snow, the wipers may make a scraping noise. If such a sound is heard, change the wipers to the upper position and remove any accumulated snow.

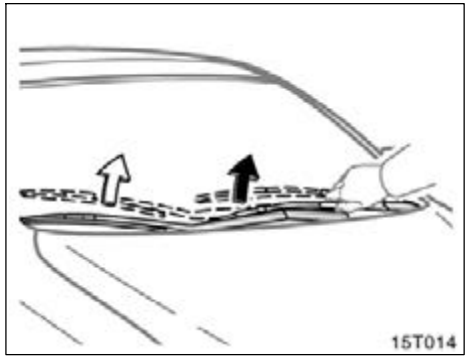

To shift the windshield wipers from retracted to rest position, hold the connection of the wiper arm and wiper blade and pull it upward more than 9 cm (3.5 in.) along the windshield glass with the force of about 70 N (7 kgf, 16 lbf.).

NOTICE
To prevent the wiper blades from being deformed, be sure to hold the connection of the wiper arm and wiper blade securely.

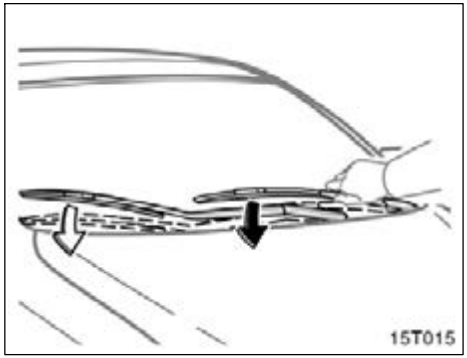

To return the windshield wipers to retracted position, push the connection of the wiper arm and wiper blade downward.

NOTICE
To prevent the wiper blades from being deformed, be sure to hold the connection of the wiper arm and wiper blade securely.

Rear window defogger

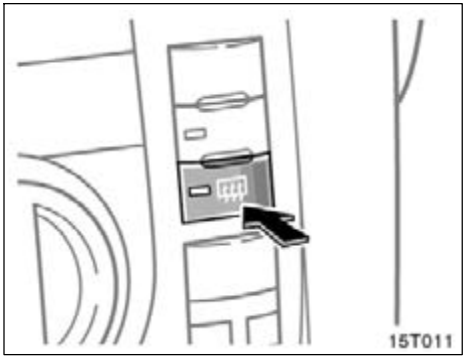

To defog or defrost the rear window, push the switch.

The engine switch must be in the “ON” position.

The thin heater wires on the inside of the rear window will quickly clear the surface. An indicator light will illuminate to indicate the defogger is operating.

Push the switch once again to turn the defogger off.

The system will automatically shut off after the defogger has operated about 15 minutes.

Make sure you turn the defogger off when the window is clear. Leaving the defogger on for a long time could cause the battery to discharge, especially during stop–and–go driving. The defogger is not designed for drying rain water or for melting snow.

NOTICE
When cleaning the inside of the rear window, be careful not to scratch or damage the heater wires or connectors.

OPERATION OF INSTRUMENTS AND CONTROLS

Gauges, Meters and Service reminder indicators

Fuel gauge 104
Engine coolant temperature gauge 104
Tachometer 105
Odometer and two trip meters 105
Service reminder indicators and warning buzzers 107

Fuel gauge

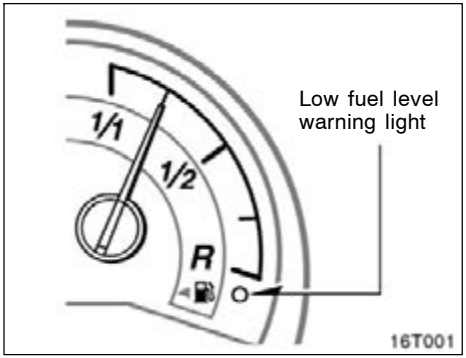

The gauge indicates the approximate quantity of fuel remaining in the tank when the engine switch is on.

Nearly full—Needle at “1/1”
Nearly empty—Needle at “R”

It is a good idea to keep the tank over 1/4 full.

The needle moves when braking, accelerating or making turns. This is caused by the movement of the fuel in the tank.

On inclines or curves, due to the movement of fuel in the tank, the fuel gauge needle may fluctuate or the low fuel level warning light may come on earlier than usual.

If the fuel level approaches “R” or the low fuel level warning light comes on, fill the fuel tank as soon as possible.

If the fuel tank is completely empty, the malfunction indicator lamp comes on. Fill the fuel tank immediately.

The indicator lamp goes off after driving several times. If the indicator lamp does not go off, contact your Scion dealer as soon as possible.

Engine coolant temperature gauge

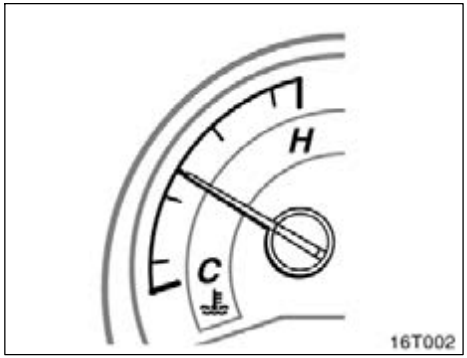

The gauge indicates the engine coolant temperature when the engine switch is on. The engine operating temperature will vary with changes in weather and engine load.

If the needle moves to the “H” position, your engine is too hot. If your vehicle overheats, stop your vehicle and allow the engine to cool.

Your vehicle may overheat during severe operating conditions, such as:

- Driving up a long hill on a hot day.
- Reducing speed or stopping after high speed driving.
- Idling for a long period with the air conditioning on in stop–and–go traffic.

If the engine coolant temperature gauge needle is not displayed, there may be a problem in the system. In this case, contact your Scion dealer as soon as possible.

NOTICE

- ***Do not remove the thermostat in the engine cooling system as this may cause the engine to overheat. The thermostat is designed to control the flow of coolant to keep the temperature of the engine within the specified operating range.***
- ***Do not continue driving with an overheated engine. See "If your vehicle overheats" on page 197.***

Tachometer

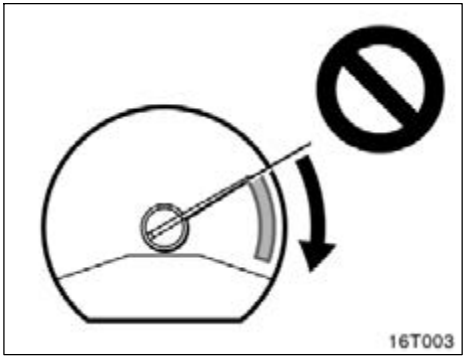

The tachometer indicates engine speed in thousands of rpm (revolutions per minute). Use it while driving to select correct shift points and to prevent engine lugging and over–revving.

Driving with the engine running too fast causes excessive engine wear and poor fuel economy. Remember, in most cases the slower the engine speed, the greater the fuel economy.

NOTICE

Do not let the indicator needle get into the red zone. This may cause severe engine damage.

Odometer and two trip meters

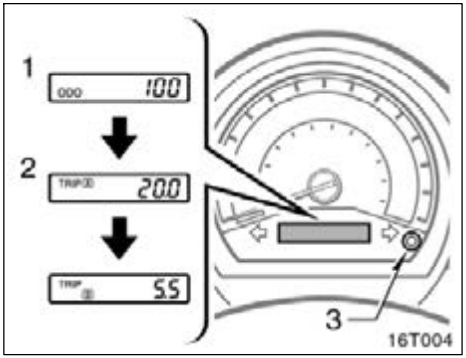

This meter displays the odometer and two trip meters.

1. Odometer—Shows the total distance the vehicle has been driven.
2. Two trip meters—Show two different distances independently driven since the last time each trip meter was set to zero.

   You can use one trip meter to calculate the fuel economy and the other to measure the distance on each trip. All trip meter data is cancelled if the electrical power source is disconnected.

3. Trip meter reset knob—Resets the two trip meters to zero, and also change the meter display.

   To reset the trip meter A to zero, display the meter A reading, then push and hold the knob until the meter is set to zero. The same process can be applied for resetting the trip meter B.

   To change the meter display, quickly push and release the knob. The meter display changes in the order from the odometer to trip meter A to trip meter B, then back to the odometer each time you push.

Service reminder indicators and warning buzzers

If the indicator or buzzer comes on...		Do this.
(a)	**BRAKE**	If parking brake is off, stop immediately and contact Scion dealer.
(b)	(Indicator and buzzer)	Fasten driver's seat belt.
(c)	PASSENGER (Indicator and buzzer)	Fasten front passenger's seat belt
(d)		Stop immediately and contact Scion dealer.
(e)	MAINT REQD	Replace engine oil.
(f)	CHECK	Take vehicle to Scion dealer.
(g)	Low fuel level warning light	Fill up tank. (See "Fuel gauge" on page 104.)

If the indicator or buzzer comes on...		Do this.
(h)		Stop and check.
(i)	ABS	Take vehicle to Scion dealer. If brake system warning light is also on, stop immediately and contact Scion dealer.
(j)		Close all side doors and back door.
(k)		Take vehicle to Scion dealer immediately.
(l)		Adjust tire inflation pressure. If the light comes on after blinking for 1 minute, contact Scion dealer.
(m)	Key reminder buzzer	Remove key.

(a) Brake System Warning Light

This light comes on in the following cases when the engine switch is in the “ON” position.

- **When the parking brake is applied...**

The light comes on for a few seconds when the engine switch is turned to the “ON” position even after the parking brake is released.

- **When the brake fluid level is low...**

CAUTION

It is dangerous to continue driving normally when the brake fluid level is low.

Have your vehicle checked at your Scion dealer in the following cases:

- The light does not come on even if the parking brake is applied when the engine switch is in the “ON” position.
- The light does not come on even if the engine switch is turned to the “ON” position with the parking brake released.

A warning light turning on briefly during operation does not indicate a problem.

CAUTION

If either of the following conditions occurs, immediately stop your vehicle at a safe place and contact your Scion dealer.

- **The light does not turn off even after the parking brake is released while the engine is running.**

  In this case, the brakes may not work properly and your stopping distance will become longer. Depress the brake pedal firmly and bring the vehicle to an immediate stop.

- **The brake system warning light remains on together with the “ABS” warning light.**

  In this case, not only the anti–lock brake system will fail but also the vehicle will become extremely unstable during braking.

(b) Driver’s Seat Belt Reminder Light and Buzzer

The light and buzzer act as a reminder to buckle up the driver’s seat belt.

Once the engine switch is turned to the “ON” or “START” position, the reminder light and buzzer come on if the driver’s seat belt is not fastened. Unless the driver fastens the belt, the light keeps flashing and the buzzer stops after about 6 seconds.

If the vehicle speed rises above 15 km/h (9 mph) with the seat belt unfastened, the buzzer will sound for about 10 seconds. Then, if the seat belt is still unfastened, the buzzer will sound in a different tone for 20 seconds. Even if the vehicle speed drops below 15 km/h (9 mph), the buzzer will continue to sound. To stop the buzzer, fasten the seat belt. If the buzzer still sounds, make sure the front passenger’s seat belt is fastened.

(c) Front Passenger’s Seat Belt Reminder Light and Buzzer

The light acts as a reminder to have the front passenger buckle up the seat belt.

Once the engine switch is turned to the “ON” or “START” position, the reminder light comes on if a passenger sits in the front passenger seat and does not fasten the seat belt. Unless the front passenger fastens the belt, the light continues flashing.

If the vehicle speed rises above 15 km/h (9 mph) with the seat belt unfastened, the buzzer will sound for about 10 seconds. Then, if the seat belt is still unfastened, the buzzer will sound in a different tone for 20 seconds. Even if the vehicle speed drops below 15 km/h (9 mph), the buzzer will continue to sound. To stop the buzzer, fasten the seat belt. If the buzzer still sounds, make sure the driver’s seat belt is fastened.

If luggage or other load is placed on the front passenger seat, depending on its weight, the reminder light to flash and buzzer to sound.

(d) Charging System Warning Light

This warning light comes on when the engine switch is turned to the “ON” position, and goes off when the engine is started.

When there are problems in the charging system while the engine is running, the warning light comes on.

NOTICE

When the charging system warning light comes on while the engine is running, malfunctions such as the engine drive belt being broken may have occurred. If the warning light comes on, immediately stop the vehicle in a safe place and contact your Scion dealer.

(e) Engine Oil Replacement Reminder Light

This light acts as a reminder to replace the engine oil.

This light will come on when the engine switch is turned to the “ON” position, and will go off after a few seconds.

When you drive for about 7200 km (4500 miles) after the engine oil replacement, this light illuminates for about 3 seconds and then flashes for about 12 seconds after the engine switch is turned to the “ON” position. If you continue driving without replacing the engine oil, and if the distance driven exceeds 8000 km (5000 miles), the light will come on after the engine switch is turned to the “ON” position. The light will remain on thereafter.

If the light is flashing, we recommend that you replace the engine oil at an early opportunity depending on the driving and road conditions. If the light comes on, replace it as soon as possible.

The system must be reset after the engine oil replacement. Reset the system by the following procedure:

1. Turn the engine switch to the “OFF” position with the odometer reading shown. (For details, see “Odometer and two trip meters” on page 105.)
2. Turn the engine switch to the “ON” position while holding down the trip meter reset knob.

Hold down the knob for at least 5 seconds. The odometer indicates “000000” and the light goes off.

If the system fails to reset, the light will remain on or keep flashing.

(f) Malfunction Indicator Lamp

This lamp comes on when the engine switch is turned to the "ON" position and goes off after the engine starts. This means that the warning light system is operating properly.

If the lamp remains on or the lamp comes on while driving, first check the following.

- Empty fuel tank

  If the fuel tank is empty, refuel immediately.

- Loose fuel tank cap

  If the fuel tank cap is loose, securely tighten it.

These cases are temporary malfunctions. The malfunction indicator lamp will go off after taking several driving trips.

If the lamp will not go off even after the several trips, contact your Scion dealer as soon as possible.

If the fuel tank is not empty or the fuel tank cap is not loose...

- There is a problem somewhere in the engine, emission control system, automatic transmission electrical system or warning light system itself.

Contact your Scion dealer as soon as possible to service the vehicle.

Emissions Inspection and Maintenance (I/M) programs

Your vehicle may not pass a state emission inspection if the malfunction indicator lamp remains on. Contact your Scion dealer to check your vehicle's emission control system and OBD (On–Board Diagnostics) system before taking your vehicle for the inspection.

For details, see "Emissions inspection and maintenance (I/M) programs" on page 226.

(g) Low Fuel Level Warning Light

This light comes on when the fuel level in the tank becomes very low. Fill up the tank as soon as possible.

On inclines or curves, due to the movement of fuel in the tank, the low fuel level warning light may come on earlier than usual.

(h) Low Engine Oil Pressure Warning Light

This light warns that the engine oil pressure is too low.

If it flickers or stays on while you are driving, pull off the road to a safe place and stop the engine immediately. Call a Scion dealer or qualified repair shop for assistance.

The light may occasionally flicker when the engine is idling or it may come on briefly after a hard stop. There is no cause for concern if it then goes out when the engine is accelerated slightly.

The light may come on when the oil level is extremely low. It is not designed to indicate low oil level, and the oil level must be checked using the level dipstick.

NOTICE
Do not drive the vehicle with the warning light on—even for one block. It may ruin the engine.

(i) "ABS" Warning Light

The light comes on when the engine switch is turned to the "ON" position. If the anti–lock brake system works properly, the light turns off after a few seconds. Thereafter, if the system malfunctions, the light comes on again.

When the "ABS" warning light is on (and the brake system warning light is off), the anti–lock brake system does not operate, but the brake system still operates conventionally.

When the "ABS" warning light is on (and the brake system warning light is off), the anti–lock brake system does not operate so that the wheels could lock up during sudden braking or braking on slippery road surfaces.

If any of the following conditions occurs, this indicates a malfunction somewhere in the components monitored by the warning light system. Contact your Scion dealer as soon as possible to service the vehicle.

- The light does not come on when the engine switch is turned to the "ON" position, or remains on.
- The light comes on while you are driving.

A warning light turning on briefly during operation does not indicate a problem.

⚠ CAUTION

If the "ABS" warning light remains on together with the brake system warning light, immediately stop your vehicle at a safe place and contact your Scion dealer.

In this case, not only the anti–lock brake system will fail but also the vehicle will become extremely unstable during braking.

(j) Open Door Warning Light

This light remains on until all the side doors and back door are completely closed.

(k) SRS Warning Light

This indicator comes on when the engine switch is turned to the "ON" position. It goes off after about 6 seconds. This means the SRS front airbags, SRS side airbags, curtain shield airbags and seat belt pretensioners are operating properly.

This warning light system monitors the airbag sensor assembly, front airbag sensors, side and curtain shield airbag sensor assemblies, curtain shield airbag sensor assemblies, driver's seat position sensor, driver's seat belt buckle switch, front passenger occupant classification system, "AIR BAG ON" indicator light, "AIR BAG OFF" indicator light, front passenger's seat belt buckle switch, seat belt pretensioner assemblies, inflators, warning light, interconnecting wiring and power sources.

If any of the following conditions occurs, this indicates a malfunction of the airbags or seat belt pretensioners. Contact your Scion dealer as soon as possible.

- When the engine switch is turned to the "ON" position, the light does not come on or remains on for more than 6 seconds.
- The light comes on while driving.

The SRS warning light and “AIR BAG OFF” indicator light will come on if there is a malfunction in the front passenger occupant classification system.

(l) Tire Pressure Warning Light

This light comes on when the engine switch is turned to the “ON” position. If the tire pressure warning system works properly and tire inflation pressure is appropriate, the light goes off after a few seconds.

This light comes on or comes on after blinking for 1 minute in the following cases when the engine switch is turned to the “ON” position.

- **When a low tire inflation pressure is detected while driving...**

  If any tire has low inflation pressure, the light comes on.

  The light goes off after the tire inflation pressure is adjusted to a specified level.

- **When initializing the system...**

  If initialization is accepted, the light blinks slowly three times.

- **When the system malfunctions...**

  If the system malfunctions, the light comes on after blinking for 1 minute.

  Although it is no problem to continue driving, have your vehicle checked by your Scion dealer as soon as possible.

(m) Key Reminder Buzzer

This buzzer acts as a reminder to remove the key when you open the driver’s door with the engine switch in the “ACC” or “LOCK” position.

CHECKING SERVICE REMINDER INDICATORS (except the low fuel level warning light)

1. Apply the parking brake.
2. Open either side door or back door.
   The open door warning light should come on.
3. Close the door.
   The open door warning light should go off.
4. Turn the engine switch to the “ON” position, but do not start the engine.

All the service reminder indicators except the open door warning light should come on. The “ABS” warning light, “MAINT REQD” reminder light and tire pressure warning light go off after a few seconds. The SRS warning light goes off after about 6 seconds.

If any service reminder indicator or warning buzzer does not function as described above, have it checked by your Scion dealer as soon as possible.

OPERATION OF INSTRUMENTS AND CONTROLS

Engine (ignition) switch, Transmission and Parking brake

Engine (ignition) switch 116
Automatic transmission 117
Manual transmission 120
Tire pressure warning system 121
Parking brake 127
Cruise control 127

Engine (ignition) switch

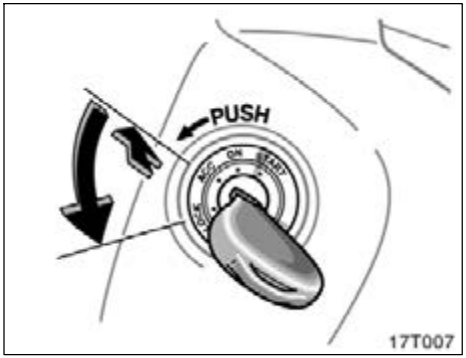

"START"—Starter motor on. The key will return to the "ON" position when released.

For starting tips, see page 184.

"ON"—Engine on and all accessories on.

This is the normal driving position.

"ACC"—Accessories such as the radio operate, but the engine is off.

If you leave the key in the "ACC" or "LOCK" position and open the driver's door, a buzzer will remind you to remove the key.

"LOCK"—Engine is off and the steering wheel is locked. The key can be removed only at this position.

You must push in the key to turn the engine switch from "ACC" to the "LOCK" position. On vehicles with an automatic transmission, the shift lever must be put in the "P" position before pushing the key.

When starting the engine, the key may seem stuck at the "LOCK" position. To free it, first be sure the key is pushed all the way in, and then rock the steering wheel slightly while turning the key gently.

Approximately five hours after the engine is turned off, you may hear a sound coming from underneath the luggage compartment for several minutes. This is normal operation and does not indicate a malfunction. (See "Leak detection pump" on page viii.)

⚠ CAUTION

For vehicles with manual transmission:

Never remove the key when the vehicle is moving, as this will lock the steering wheel and result in loss of steering control.

NOTICE

Do not leave the key in the "ON" position if the engine is not running. The battery will discharge and the ignition could be damaged.

Automatic transmission

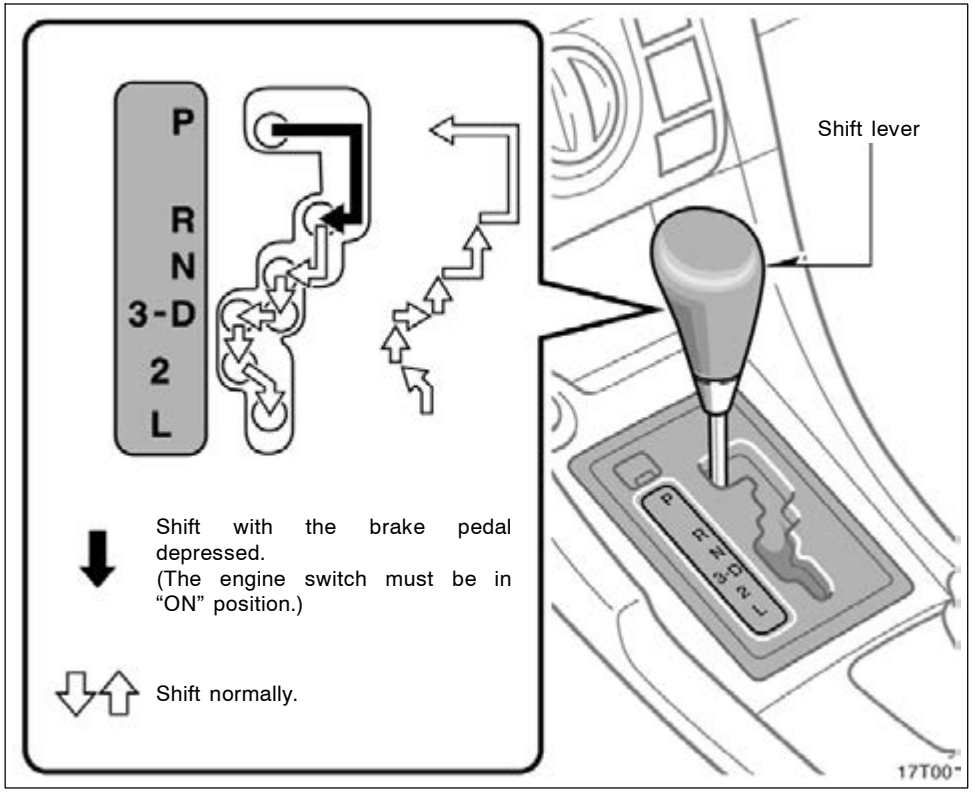

Your automatic transmission has a shift lock system to minimize the possibility of incorrect operation. This means you can only move out of "P" position when the brake pedal is depressed (with the engine switch in "ON" position).

(a) Shift lever

The shift position is displayed on the instrument cluster.

P: Parking, engine starting and key removal

R: Reverse

N: Neutral

D: Normal driving (with overdrive on)

3: Engine braking

2: Stronger engine braking

L: Maximum engine braking

(b) Normal driving

1. Start the engine as instructed in “How to start the engine” on page 184. The transmission must be in “P” or “N”.
2. With your foot holding down the brake pedal, shift the shift lever to “D”.

When the lever is in the “D” position, the automatic transmission system will select the most suitable gear for running conditions such as normal cruising, hill climbing, etc.

Always use the “D” position for better fuel economy and quieter driving. If the engine coolant temperature is low, the transmission will not shift into the overdrive gear even in the “D” position.

⚠ CAUTION

Never put your foot on the accelerator pedal while shifting.

3. Release the parking brake and brake pedal. Depress the accelerator pedal slowly for smooth starting.

(c) Using engine braking

To use engine braking, you can downshift the transmission as follows:

- Shift into the “3” position. The transmission will downshift to third gear, and engine braking will be enabled.
- Shift into the “2” position. The transmission will downshift to second gear when the vehicle speed drops down to or lower than 108 km/h (67 mph), and stronger engine braking will be enabled.
- Shift into the “L” position. The transmission will downshift to first gear when the vehicle speed drops down to or lower than 54 km/h (34 mph), and maximum engine braking will be enabled.

When the cruise control is being used, even if you down shift from “D” to “3”, engine braking will not be enabled because the cruise control is not cancelled.

For ways to decrease the vehicle speed, see “Cruise control” on page 127.

⚠ CAUTION

Be careful when downshifting on a slippery surface. Abrupt shifting could cause the vehicle to skid or spin.

(d) Using “2” and “L” positions

The “2” and “L” positions are used for strong engine braking as described previously.

With the shift lever in “2” or “L”, you can start the vehicle in motion as with the lever in “D”.

With the shift lever in “2”, the vehicle will start in first gear and automatically shift to second gear.

With the shift lever in “L”, the transmission is engaged in first gear.

NOTICE

- ***Be careful not to over–rev the engine. Watch the tachometer to keep engine rpm from going into the red zone. The approximate maximum allowable speed for each position is given below for your reference:***

  "2" . . . . . 108 km/h (67 mph)
  "L" . . . . . 60 km/h (37 mph)

- ***Do not continue hill climbing for a long time in the "2" or "L" position. This may cause severe automatic transmission damage from overheating. To prevent such damage, "D" position should be used in hill climbing.***

(e) Backing up

1. Bring the vehicle to a complete stop.
2. With the brake pedal held down with your foot, shift the shift lever to the "R" position.

NOTICE

Never shift into reverse while the vehicle is moving.

(f) Parking

1. Bring the vehicle to a complete stop.
2. Pull the parking brake lever up fully to securely apply the parking brake.
3. With the brake pedal pressed down, shift the shift lever to the "P" position.

⚠ CAUTION

Never attempt to move the shift lever into "P" position under any circumstances while the vehicle is moving. Serious mechanical damage and loss of vehicle control may result.

(g) Good driving practice

If the transmission repeatedly shifts up and down between third gear and overdrive when climbing a gentle slope, shift the shift lever to the "3" position. Be sure to shift the shift lever to the "D" position immediately afterward.

⚠ CAUTION

Always keep your foot on the brake pedal while stopped with the engine running. This prevents the vehicle from creeping.

NOTICE

Always use the brake pedal or the parking brake to hold the vehicle on an upgrade. Do not attempt to hold the vehicle using the accelerator pedal, as this can cause the transmission to overheat.

(h) If you cannot move the shift lever out of "P" position

If you cannot shift the shift lever from the "P" position even though the brake pedal is depressed, use the shift lock override button. For instructions, see "If you cannot shift automatic transmission shift lever" on page 213.

Manual transmission

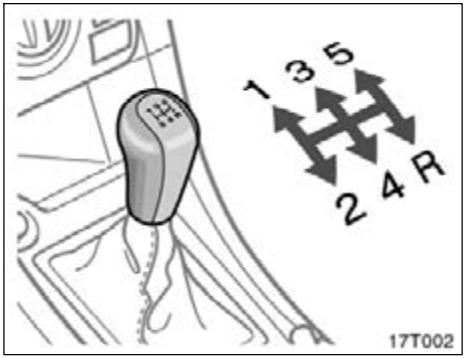

The shift pattern is conventional as shown above.

Press the clutch pedal down fully while shifting, and then release it slowly. Do not rest your foot on the pedal while driving, because it will cause clutch trouble. Do not use the clutch to hold the vehicle when stopped on an uphill grade—use the parking brake.

Maximum allowable speeds

To get on a highway or to pass slower traffic, maximum acceleration may be necessary. Make sure you observe the following maximum allowable speeds in each gear:

gear	km/h (mph)
1	47 (29)
2	81 (50)
3	125 (77)
4	172 (106)

NOTICE

Do not downshift if you are going faster than the maximum allowable speed for the next lower gear.

Good driving practice

If it is difficult to shift into reverse, put the transmission in neutral, release the clutch pedal momentarily, and then try again.

⚠ CAUTION

Be careful when downshifting on a slippery surface. Abrupt shifting could cause the vehicle to skid or spin.

NOTICE

- ***Do not rest your foot on the clutch pedal while driving. Doing so may cause clutch trouble.***
- ***Do not use any gears other than first gear when starting off and moving forward. Doing so may damage the clutch.***
- ***Make sure the vehicle is completely stopped before shifting into reverse.***

Tire pressure warning system

The tire pressure warning system warns you that the tire inflation pressure is low.

The tire pressure warning system is not a substitute for checking normal tire inflation pressure. Check the tire inflation pressure with a tire pressure gauge regularly.

⚠ CAUTION

The warning system may not activate immediately if blowout or sudden air loss should occur.

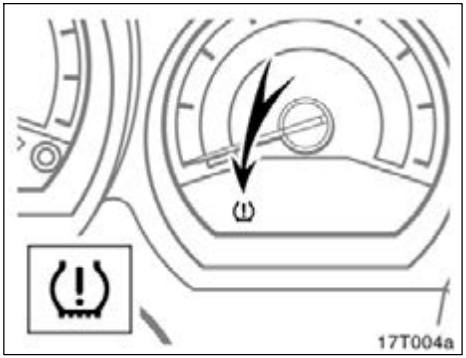

The tire pressure warning light comes on when the engine switch is turned to the “ON” position and goes off after a few seconds. This means the tire pressure warning light is operating properly. If the tire inflation pressure becomes low, the light comes on again. In this case, adjusting the tire inflation pressure will turn off the light after a few minutes. If the light comes on after blinking for 1 minute, the tire pressure warning system is not working properly.

Indicator status	Meanings	Do this
ON	Tire inflation pressure is low	Adjust the tire inflation pressure
ON after blinking for 1 minute	Tire pressure warning system malfunction	Have the system checked at your Scion dealer

⚠ CAUTION

If the tire pressure warning light comes on, be sure to observe the following precautions. Failure to do so could cause loss of vehicle control and result in death or serious injury.

- **Stop your vehicle in a safe place as soon as possible. Adjust the tire inflation pressure immediately.**
- **If the tire pressure warning light comes on even after tire inflation pressure adjustment, it is probable that you have a flat tire. Check the tires. If the tire is flat, change to the spare tire and have the flat tire repaired by the nearest Scion dealer.**
- **Avoid abrupt maneuvering and braking. If the vehicle tires deteriorate, you could lose control of the steering wheel or the brakes.**

The tire pressure warning light may turn on due to natural causes such as natural air leaks or tire inflation pressure changes caused by temperature. In this case, adjusting the tire inflation pressure will turn off the light after a few minutes.

Pushing the tire pressure warning reset switch should not turn off the tire pressure warning light. Adjusting the tire inflation pressure will turn off the light.

The compact spare tire is not equipped with the tire pressure warning valve and transmitter. If a tire goes flat, the warning light will not turn off even though the flat tire is replaced with the spare tire. Replace the spare tire with the repaired tire and adjust the proper tire inflation pressure. The tire pressure warning light will turn off after a few minutes.

⚠ CAUTION

Each tire, including the spare (if provided), should be checked monthly when cold and inflated to the inflation pressure recommended by the vehicle manufacturer on the vehicle placard or tire inflation pressure label (tire and load information label). (If your vehicle has tires of a different size than the size indicated on the vehicle placard or tire inflation pressure label (tire and load information label), you should determine the proper tire inflation pressure for those tires.)

As an added safety feature, your vehicle has been equipped with a tire pressure monitoring system (TPMS–tire pressure warning system) that illuminates a low tire pressure telltale (tire pressure warning light) when one or more of your tires is significantly under–inflated. Accordingly, when the low tire pressure telltale (tire pressure warning light) illuminates, you should stop and check your tires as soon as possible, and inflate them to the proper pressure. Driving on a significantly under–inflated tire causes the tire to overheat and can lead to tire failure. Under–inflation also reduces fuel efficiency and tire tread life, and may affect the vehicle's handling and stopping ability.

Please note that the TPMS (tire pressure warning system) is not a substitute for proper tire maintenance, and it is the driver's responsibility to maintain correct tire pressure, even if under–inflation has not reached the level to trigger illumination of the TPMS low tire pressure telltale (tire pressure warning light).

Your vehicle has also been equipped with a TPMS (tire pressure warning system) malfunction indicator to indicate when the system is not operating properly. The TPMS (tire pressure warning system) malfunction indicator is combined with the low tire pressure telltale (tire pressure warning light). When the system detects a malfunction, the telltale will flash for approximately one minute and then remain continuously illuminated. This sequence will continue upon subsequent vehicle start–ups as long as the malfunction exists. When the malfunction indicator is illuminated, the system may not be able to detect or signal low tire pressure as intended.

TPMS (tire pressure warning system) malfunctions may occur for a variety of reasons, including the installation of replacement or alternate tires or wheels on the vehicle that prevent the TPMS (tire pressure warning system) from functioning properly. Always check the TPMS (tire pressure warning system) malfunction telltale after replacing one or more tires or wheels on your vehicle to ensure that the replacement or alternate tires and wheels allow the TPMS (tire pressure warning system) to continue to function properly.

NOTICE

- ***Do not use liquid sealants for a flat tire as tire pressure warning valve and transmitter will be damaged.***
- ***When the tires must be repaired or replaced, have them repaired or replaced by the nearest Scion dealer or an authorized tire dealer. The tire pressure warning valves and transmitters will be affected by the installation or removal of tires.***

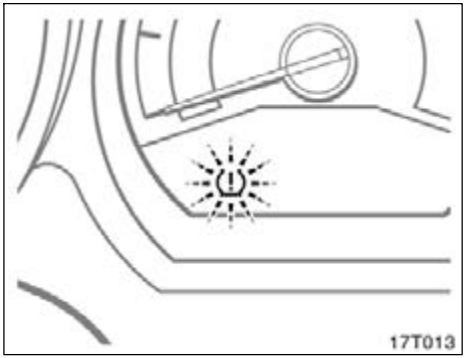

IF THE TIRE PRESSURE WARNING LIGHT COMES ON AFTER BLINKING FOR 1 MINUTE...

If the tire pressure warning light comes on after blinking for 1 minute when the engine switch is turned to the "ON" position, the tire pressure warning system is not working properly.

The system will be disabled in the following conditions:
(When the condition becomes normal, the system will work properly.)

- If tires not equipped with tire pressure warning valves and transmitters are used.
- If the ID code on the tire pressure warning valves and transmitters is not registered on the tire pressure warning computer.
- If the tire inflation pressure is more than 500 kPa (5.1 kgf/cm^2 or bar, 73 psi) or higher.

The system may be disabled in the following conditions:

(When the condition becomes normal, the system will work properly.)

- If electronic devices or facilities using similar radio wave frequencies are nearby.
- If a radio set at similar frequencies is in use in the vehicle.
- If a window tint that affects the radio wave signals is installed.
- If there is a lot of snow or ice on the vehicle, in particular around the wheels or wheel housings.
- If non–genuine Scion wheels are used.
- If tire chains are used.

If the tire pressure warning light continues to come on after blinking for 1 minute when the engine switch is turned to the "ON" position, have the system checked by your Scion dealer.

Even if you use genuine wheels, the tire pressure warning system may not work properly with some types of tires.

Pushing the tire pressure warning reset switch should not turn off the tire pressure warning light.

FCC ID: PAXPMV107J

FCC ID: HYQ13BCX

This device complies with Part 15 of the FCC Rules. Operation is subject to the following two conditions:

(1) This device may not cause harmful interference, and (2) this device must accept any interference received, including interference that may cause undesired operation.

FCC WARNING:
Changes or modifications not expressly approved by the party responsible for compliance could void the user's authority to operate the equipment.

REPLACING TIRES AND WHEELS

When replacing the tires and wheels, be sure to install tire pressure warning valves and transmitters. ID codes on the tire pressure warning valves and transmitters are registered in the tire pressure warning computer. When replacing a tire pressure warning valve and transmitter, it is necessary to register the ID code of tire pressure warning valve and transmitter. Have the ID code registered by your Scion dealer.

If the ID code is not registered, the system will not work properly. After about 20 minutes, the tire pressure warning light comes on after blinking for 1 minute to indicate a system malfunction.

NOTICE

When the tires or tire pressure warning valves and transmitters must be replaced, have them replaced by your Scion dealer. The tire pressure warning valves and transmitters will be affected by the installation or removal of tires.

Tire pressure warning reset switch

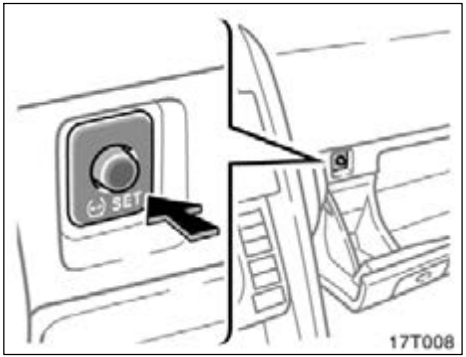

When initializing the system, the present tire inflation pressure is stored as standard. The tire pressure warning system determines decreased air pressure by comparing the present and the standard tire inflation pressures. When you change the set tire inflation pressure, it is necessary to initialize the tire pressure warning system.

- When rotating the tires on vehicles differing with front and rear tire inflation pressures.

To initialize the system, perform the following:

1. Park the vehicle in a safe place and turn the engine switch to the “ACC” or “LOCK” position.
2. Adjust the pressure of all the installed tires to the specified cold tire inflation pressure level. (See “Tires” on page 265.)
3. Turn the engine switch to the “ON” position.
4. Open the glove box, and push and hold the tire pressure warning reset switch until the tire pressure warning light blinks slowly three times.
5. Wait for a few minutes with the engine switch in “ON” position, and then turn the engine switch to the “ACC” or “LOCK” position.

If you push the tire pressure reset switch while the vehicle is moving, initialization is not performed.

If you push the tire pressure reset switch accidentally and initialization is performed, adjust the tire inflation pressure to the specified level and initialize the system again.

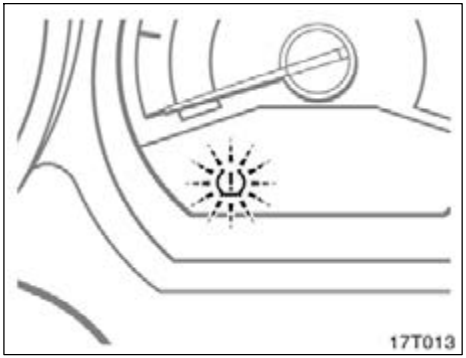

If the tire pressure warning light does not blink slowly three times when you push and hold the tire pressure warning reset switch, initialization has failed and the tire pressure warning system may not work properly. In this case, initialize the system again. If initialization cannot be performed, have the system checked at your Scion dealer.

⚠ CAUTION

Do not push the reset switch without first adjusting the tire inflation pressure to the specified level. Otherwise, the tire pressure warning light may not come on even if the tire inflation pressure is low, or it may come on when the tire inflation pressure is actually normal.

Parking brake

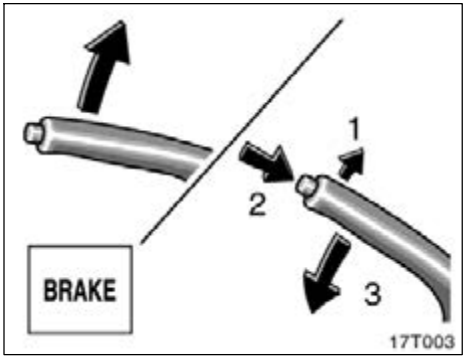

When parking, firmly apply the parking brake to avoid inadvertent creeping.

To set: Pull up the lever. For better holding power, first depress the brake pedal and hold it while setting the parking brake.
To release: Pull up the lever slightly (1), press the lock release button (2), and lower (3).

To remind you that the parking brake is set, the parking brake reminder light in the instrument panel remains on until you release the parking brake.

⚠ CAUTION

Before driving, be sure the parking brake is fully released and the parking brake reminder light is off.

Cruise control

The cruise control is designed to maintain a set cruising speed without requiring the driver to operate the accelerator. Cruising speed can be set to any speed above 40 km/h (25 mph).

Within the limits of the engine's capabilities, cruising speed can be maintained up or down grades. However, changes in vehicle speed may occur on steeper grades.

⚠ CAUTION

- **To help maintain maximum control of your vehicle, do not use the cruise control when driving in heavy or varying traffic, or on slippery (rainy, icy or snow–covered) or winding roads.**
- **Avoid vehicle speed increases when driving downhill. If the vehicle speed is too fast in relation to the cruise control set speed, cancel the cruise control then downshift the transmission to use engine braking to slow down.**

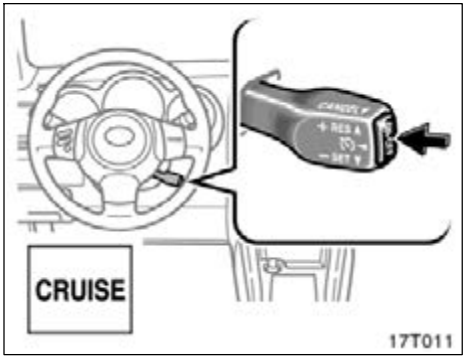

TURNING THE SYSTEM ON AND OFF

To turn the cruise control on, press the “ON–OFF” button. The “CRUISE” indicator light on the instrument cluster will come on to indicate that the cruise control is operational. Pressing the “ON–OFF” button again turns the system off.

When the system is turned off, cruising speed must be reset when the cruise control is turned on again.

⚠ CAUTION

To avoid accidentally engaging the cruise control, turn the system off when it is not in use. Make sure the “CRUISE” indicator light is off.

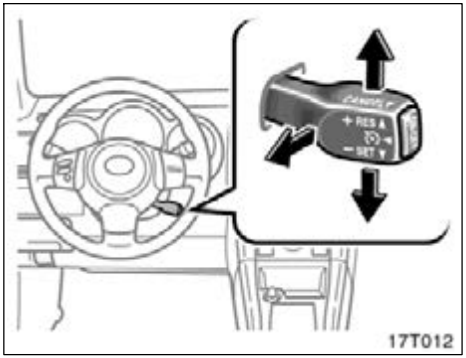

SETTING THE CRUISING SPEED

On vehicles with automatic transmission, the transmission must be in “D” or “3” before you set the cruising speed.

Bring your vehicle to the desired speed, push the lever down in the “– SET” direction and release it. This sets the vehicle at that speed. If the speed is not satisfactory, tap the lever up for a faster speed, or tap it down for a slower speed. Each tap changes the set speed by 1.6 km/h (1.0 mph). You can now take your foot off the accelerator pedal.

If you need acceleration—for example, when passing—depress the accelerator pedal enough for the vehicle to exceed the set speed. When you release it, the vehicle will return to the speed set prior to the acceleration.

⚠ CAUTION

For vehicles with manual transmission:

While driving with the cruise control on, do not shift to neutral without depressing the clutch pedal, as this may cause engine racing or overreving.

CANCELLING THE CRUISE CONTROL

The cruise control may be temporarily cancelled by the driver or by the system itself under certain circumstances. Temporary cancellation allows the set cruising speed to remain in memory.

The cruise control can be temporarily cancelled by doing the following:

- Pulling the lever in the "CANCEL" direction and releasing it
- Depressing the brake pedal
- Depressing the clutch pedal

Under certain circumstances, the cruise control is temporarily cancelled when the vehicle speed falls below 40 km/h (25 mph).

When vehicle speed drops 16 km/h (10 mph) below the set speed, the cruise control is cancelled and the set speed is erased from memory.

The "CRUISE" indicator light remains on to indicate that the system is still in operation.

To turn the cruise control off, press the "ON–OFF" button. Make sure the "CRUISE" indicator light is off.

If the cruise control automatically cancels out other than for the above cases, have your vehicle checked by your Scion dealer at the earliest opportunity.

RESUMING THE CRUISE CONTROL

If the cruise control is temporarily cancelled, the cruising speed can be resumed by pushing the lever up in the "+ RES" direction.

Vehicle speed must be above 40 km/h (25 mph).

RESETTING TO A FASTER SPEED

Push the lever up in the "+ RES" direction and hold it. Release the lever when the desired speed is attained. While the lever is held up, the vehicle will gradually gain speed.

When the difference between the actual vehicle speed and the set speed is less than 5 km/h (3 mph), the set speed can be increased 1.6 km/h (1 mph) each time by pressing the control lever upward in the "+ RES" direction quickly within 0.6 seconds.

However, a faster way to reset is to accelerate the vehicle and then push the control lever down in the "– SET" direction.

RESETTING TO A SLOWER SPEED

Push the lever down in the "– SET" direction and hold it. Release the lever when the desired speed is attained. While the lever is held down, the vehicle speed will gradually decrease.

When the difference between the actual vehicle speed and the set speed is less than 5 km/h (3 mph), the set speed can be lowered 1.6 km/h (1 mph) each time by pressing the control lever downward in the "– SET" direction quickly within 0.6 seconds.

However, a faster way to reset is to depress the brake pedal and then push the control lever down in the "– SET" direction.

On vehicles with automatic transmission, even if you downshift the transmission from the "D" position to "3" with the cruise control on, engine braking will not be applied because the cruise control is not cancelled. To decrease the vehicle speed, reset to a slower speed with the cruise control lever or depress the brake pedal. If you use the brake pedal, cruise control is cancelled.

CRUISE CONTROL FAILURE WARNING

If the "CRUISE" indicator light flashes when using the cruise control, press the "ON–OFF" button to turn the system off and then press it again to turn it on.

If any of the following conditions then occurs, there is some trouble in the cruise control system.

- The indicator light does not come on.
- The indicator light flashes again.
- The indicator light goes out after it comes on.

If this is the case, contact your Scion dealer and have your vehicle inspected.

OPERATION OF INSTRUMENTS AND CONTROLS

Air conditioning system

Controls 132
Air flow selector settings 135
Operating tips 135
Instrument panel vents 137
Air conditioning filter 138

Controls

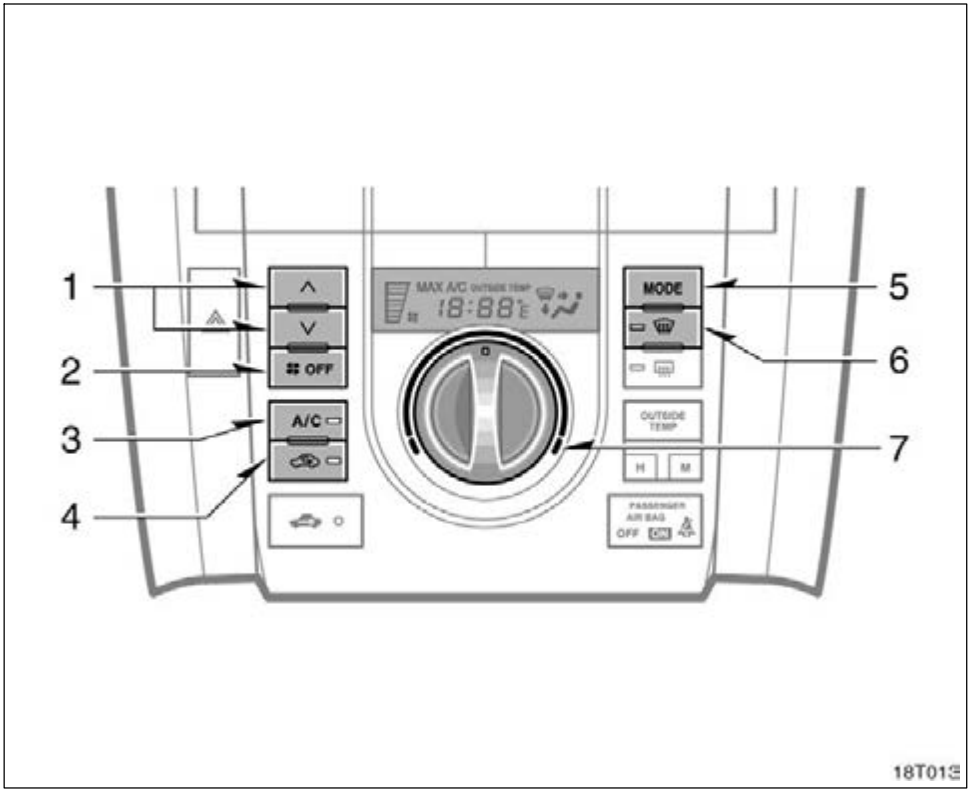

1. Fan speed selector
2. “OFF” button
3. “A/C” button
4. Air intake selector
5. “MODE” button
6. Windshield air flow button
7. Temperature selector

Fan speed selector

Push the "∧" (increase) or "∨" (decrease) button to adjust the fan speed.

Temperature selector

Turn the knob to adjust the temperature—to the right to warm, to the left to cool.

When you adjust the temperature selector to maximum cooling while the air conditioning is on and the air flow mode is set to panel, bi–level or floor, a "MAX A/C" message appears on the display and the air intake mode will be automatically changed to RECIRCULATE.

"OFF" button

Push the button to turn off the air conditioning system.

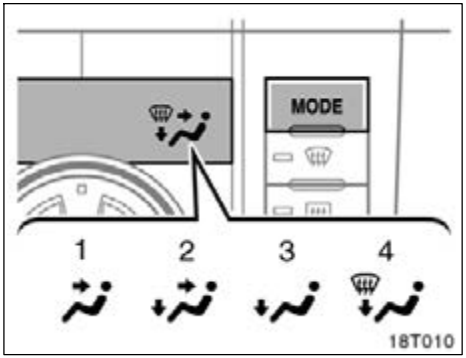

"MODE" button

Push the button to select your desired air flow mode.

1. **Panel—**Air flows mainly from the instrument panel vents.
2. **Bi–level—**Air flows from both the floor vents and the instrument panel vents.
3. **Floor—**Air flows mainly from the floor vents.
4. **Floor/Windshield—**Air flows mainly from the floor vents and windshield vents.

   Use with the air intake selector positioned in FRESH.

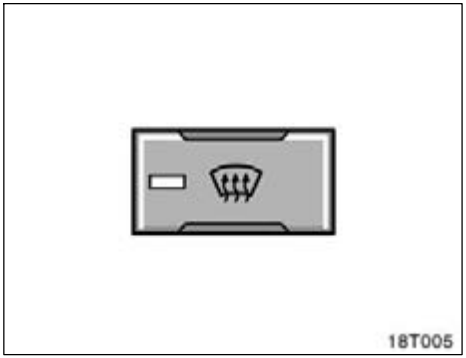

Windshield air flow button

When this button is pressed, air flows mainly from the windshield vents and turns on the defogging function with the purpose of clearing the front view.

Pressing this button once again returns the air flow mode to the last one used.

This button allows the air intake to select FRESH automatically. This is to clean up the windshield more quickly. If you want to return the setting to RECIRCULATE mode, press the air intake selector button once again.

Press the "A/C" button for dehumidified heating or cooling. This setting clears the front view more quickly.

For details about air flow selector settings, see “Air flow selector settings” described below.

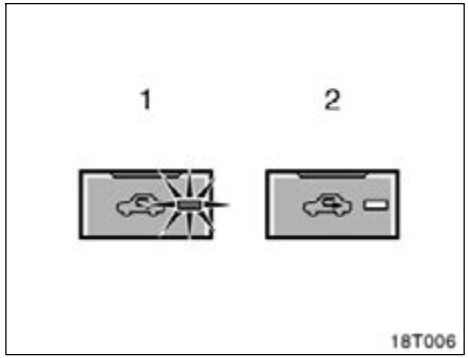

Air intake selector

Push the button to select the air source.

1. **Recirculate—**Recirculates the air inside the vehicle.
2. **Fresh—**Draws outside air into the system.

Recirculate mode or Fresh mode may be automatically switched to in accordance with the temperature setting and the inside temperature.

“A/C” button

To turn on the air conditioning, press the “A/C” button. The “A/C” button indicator will come on. To turn the air conditioning off, press the button again.

Air flow selector settings

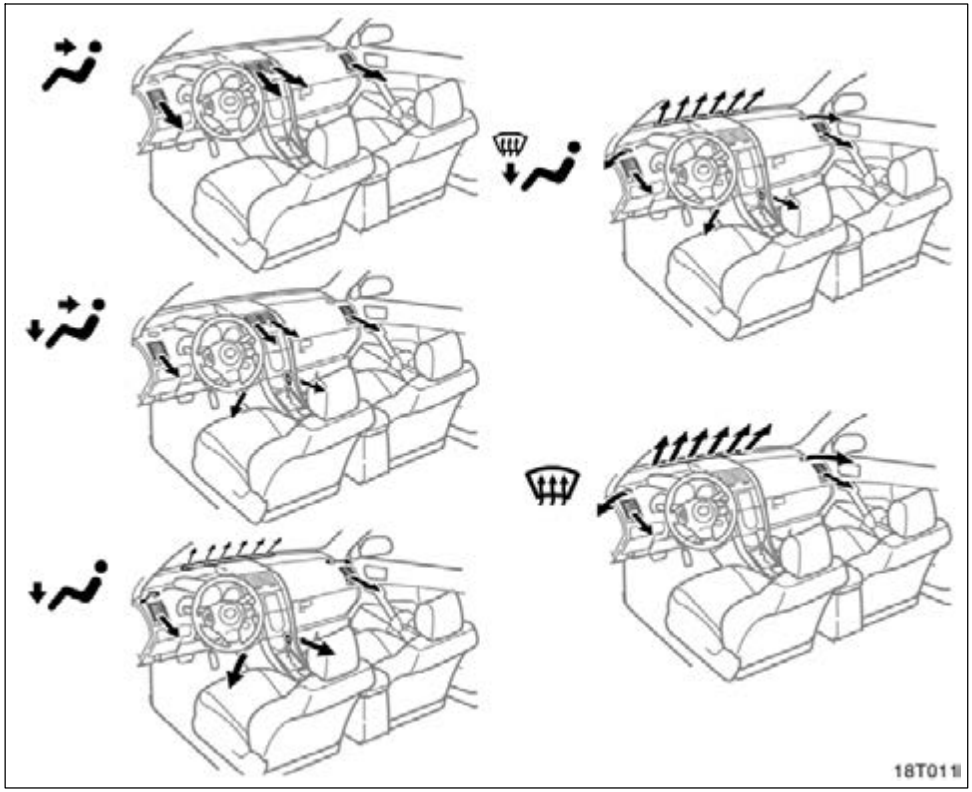

Operating tips

- To cool off your Scion after it has been parked in the hot sun, drive with the windows open for a few minutes. This vents the hot air, allowing the air conditioning to cool the interior more quickly.
- Make sure the air intake grilles in front of the windshield are not blocked (by leaves or snow, for example).
- Keep the area under the front seats clear to allow air to circulate throughout the vehicle.
- On cold days, set the fan speed to high for a minute to help clear the intake ducts of snow or moisture. This can reduce the amount of fogging on the windows.
- When driving on dusty roads, close all windows. If dust thrown up by the vehicle is still drawn into the vehicle after closing the windows, it is recommended that the air intake selector be set to FRESH and the fan speed selector to any setting except “OFF”.

- If following another vehicle on a dusty road, or driving in windy and dusty conditions, it is recommended that the air intake selector be temporarily set to RECIRCULATE, which will close off the outside passage and prevent outside air and dust from entering the vehicle interior.
- During use, various odors from inside and outside the vehicle may enter into and accumulate in the air conditioning system. This may then cause odor to be emitted from the vents.
- To reduce potential odors from occurring:
  It is recommended that the air conditioning system be set to outside air mode prior to turning the vehicle off.

⚠ CAUTION

To prevent the windshield from fogging up, do not use the windshield air flow button during cool air operation in extremely humid weather. The difference between the temperature of the outside air and that of the windshield can cause the outer surface of the windshield to fog up, blocking your vision.

NOTICE

To prevent battery discharge, do not leave the air conditioning system on longer than necessary when the engine is stopped.

Heating

For best results, set controls to:

Fan speed—To the desired fan speed
Temperature—Towards red zone
Air intake—FRESH (outside air)
Air flow—FLOOR
Air conditioning—OFF

- For quick heating, select recirculated air for a few minutes. To keep the windows from fogging, select fresh after the vehicle interior has been warmed.
- Press the “A/C” button on for dehumidified heating.
- Choose floor/windshield air flow to heat the vehicle interior while defrosting or defogging the windshield.

Air conditioning

For best results, set controls to:

Fan speed—To the desired fan speed
Temperature—Towards blue zone
Air intake—FRESH (outside air)
Air flow—PANEL
Air conditioning—ON

- For quick cooling, move the air intake selector to recirculate for a few minutes.

Ventilation

For best results, set controls to:

Fan speed—To the desired fan speed
Temperature—Towards blue zone
Air intake—FRESH (outside air)
Air flow—PANEL
Air conditioning—OFF

Defogging

The inside of the windshield

For best results, set controls to:

Fan speed—To the desired fan speed **Temperature—**Towards red zone to heat; blue zone to cool **Air intake—FRESH** (outside air) **Air flow—WINDSHIELD**

- On humid days, do not blow cold air on the windshield—the difference between the outside and inside temperatures could make the fogging worse.

Defrosting

The outside of the windshield

For best results, set controls to:

Fan speed—To the desired fan speed **Temperature—**Towards red zone **Air intake—FRESH** (outside air) **Air flow—WINDSHIELD**

- To heat the vehicle interior while defrosting the windshield, choose floor/windshield air flow.

Instrument panel vents

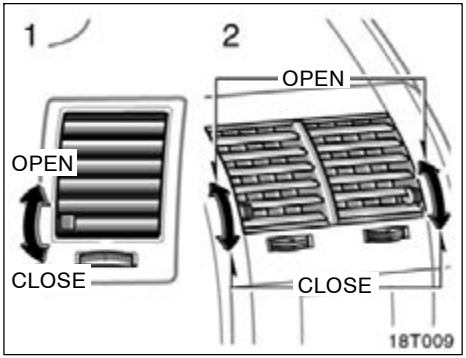

1. Side vents

2. Center vents

If air flow control is not satisfactory, check the instrument panel vents. The instrument panel vents may be opened or closed as shown.

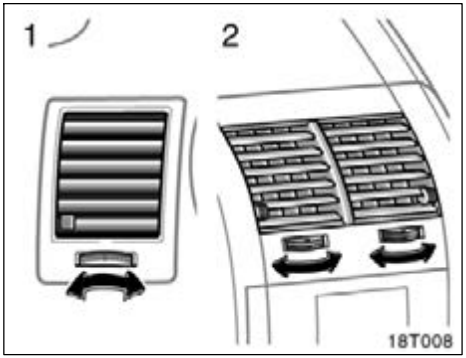

1. Side vents

2. Center vents

You can change air flow direction by turning the instrument panel vents.

Air conditioning filter—

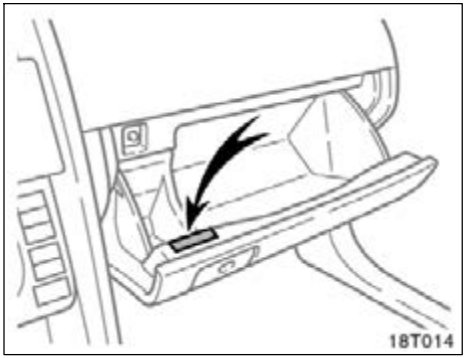

The air conditioning filter information label is placed as shown and indicates that a filter has been installed.

The air conditioning filter prevents dust from entering the vehicle through the air conditioning vent.

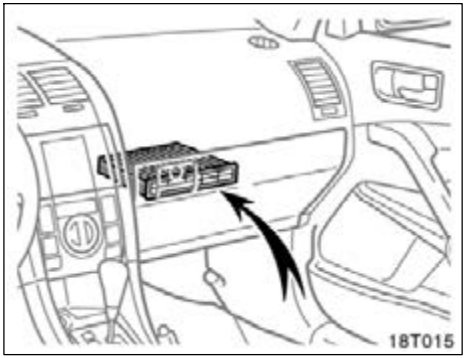

The air conditioning filter is set behind the glove box.

—Checking and replacing the air conditioning filter

The air conditioning filter may clog after long use. The filter may need to be replaced if the air flow of the air conditioner and heater experiences extreme reductions in operating efficiency, or if the windows begin to fog up easily.

To maintain the air conditioning efficiency, inspect and replace the air conditioning filter according to the maintenance schedule. In dusty areas or areas with heavy traffic flow, such as inner city or desert areas, early replacement may be required. (For scheduled maintenance information, please refer to the “Scheduled Maintenance Guide” or “Owner’s Manual Supplement”.)

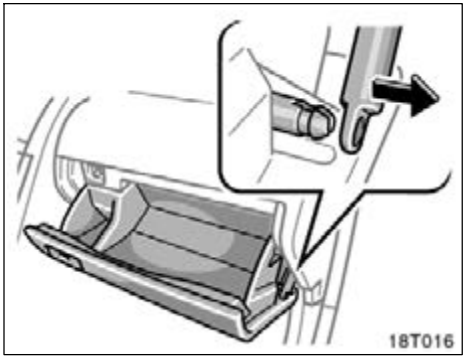

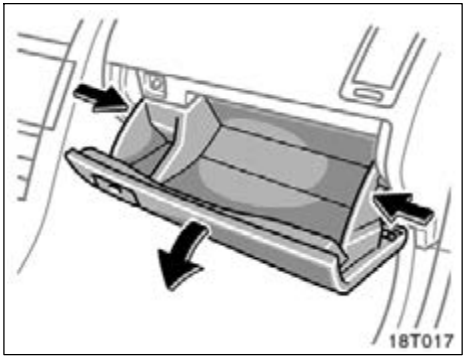

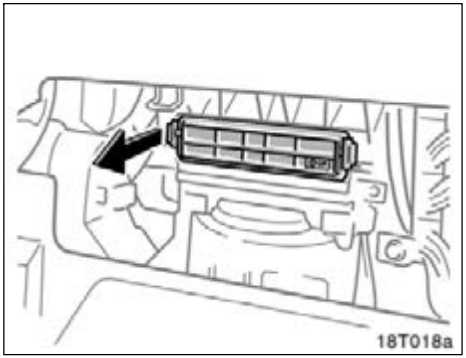

REMOVAL METHOD:

1. **Open the glove box, and slide off the damper as shown.**

   When removing, turn off the engine.

2. **Push in each side of the glove box to disconnect the claws.**

3. **Pull the filter case toward you to take it out.**

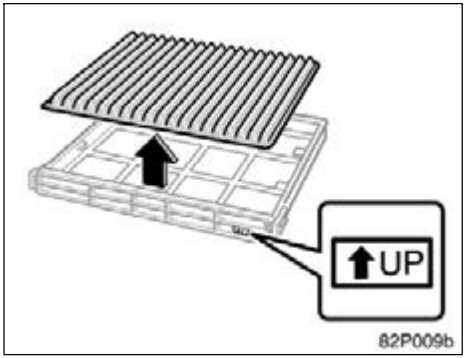

4. **Remove the filter from the filter case and replace it with a new one.**

5. **Install the filter and filter case in the reverse order of removal.**

When setting the filter to the filter case, ensure that the flat side of the filter is down and the ribbed side is up.

Position the filter case so that the "⬆UP" mark is pointing up and install it in the vehicle.

INFORMATION
The air filter should be installed properly in position. The use of air conditioning with the air filter removed may cause deteriorated dustproof performance and then affect air conditioning performance.

OPERATION OF INSTRUMENTS AND CONTROLS

Other equipment

Clock 142
Outside temperature display 142
Audio remote controls (steering switches) 143
AUX adapter 143
iPod jack 144
Cigarette lighter 144
Power outlet 145
Glove box 145
Auxiliary box 146
Rear console box 146
Cup holders 147
Tie–down hooks 147
Grocery bag hooks 148
Luggage storage box 148
Luggage cover 149
Floor mat 150
Side mudguard 150

Clock

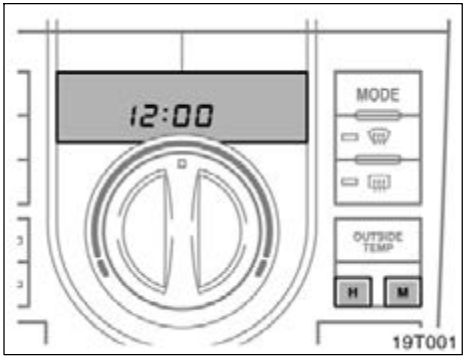

The digital clock indicates the time with the ignition off. To reset the time, the engine switch must be in the “ON” position.

To reset the hour: Push the “H” button.
To reset the minutes: Push the “M” button.

If the electrical power source has been disconnected from the clock, the time display will automatically be set to 1:00.

When the engine switch is in the “ON” position, push the “OUTSIDE TEMP” button to change the display from clock to outside temperature display. (See “Outside temperature display” in this page.)

Outside temperature display

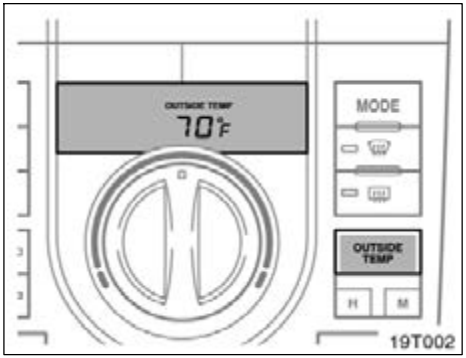

The engine switch must be in the “ON” position.

To change the display from clock to outside temperature display, push the “OUTSIDE TEMP” button. The display changes between clock and outside temperature display alternately each time you push the switch. (See “Clock” in this page.)

The displayed temperature ranges from –30°C (–22°F) up to 50°C (122°F).

When you return the key to the “ACC” position, the display returns to clock mode.

If there is a problem with the connection to the outside air temperature sensor, “– –” will appear on the display. Contact your Scion dealer.

In the following situations, the correct outside temperature may not be displayed, or the display may take longer than normal to change.

- When stopped, or driving at low speeds (less than 20 km/h [12 mph]).
- When the outside temperature has changed suddenly (at the entrance/exit of a garage, tunnel, etc.).

Audio remote controls (steering switches)

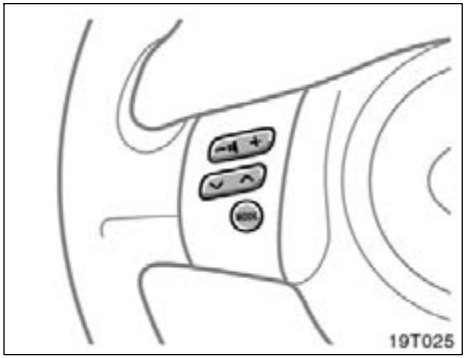

Steering switches are installed on the left side of the steering wheel.

You can use these switches to operate the audio volume control, radio, CD player and so on.

For more detailed information, see the separate “SCION Audio System Owner’s Manual” or “SCION Navigation System Owner’s Manual”.

⚠ CAUTION

Operate the switches with due care while you are driving to avoid accidents.

AUX adapter

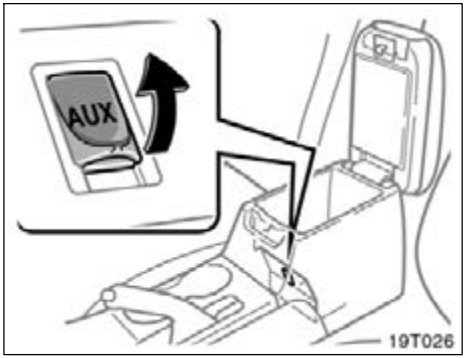

An AUX adapter is installed in the rear console box.

By inserting a mini plug into the AUX adapter, you can listen to music from a portable audio device through the vehicle’s speaker system.

When using a portable audio device connected to the power outlet or cigarette lighter, noise may occur during playback. If this happens, use the power source of the portable audio device.

If you install an audio system other than a genuine audio system, you will not be able to use the AUX adapter.

For more detailed information, see the separate “SCION Audio System Owner’s Manual” or “SCION Navigation System Owner’s Manual”.

⚠ CAUTION

When using the AUX adapter, observe the following instructions. Failure to do so could result in accident or injury.

- **Take care that the portable audio device or cords do not hinder vehicle operation.**
- **Do not adjust the audio device while driving.**

iPod jack

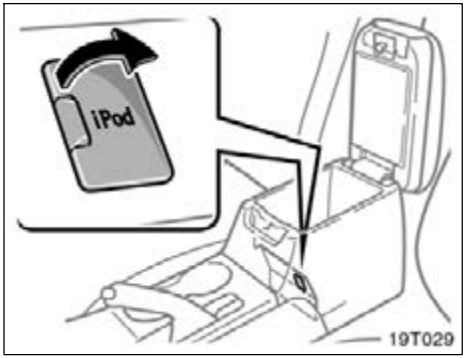

An iPod jack is located as shown.

By inserting an iPod customer cable connector into the iPod jack, you can listen to music from an iPod through the vehicle's speaker system, while charging your iPod.

If you install an audio system other than a genuine audio system, you will not be able to use the iPod jack.

For more detailed information, see the separate "SCION Audio System Owner's Manual" or "SCION Navigation System Owner's Manual".

⚠ CAUTION

When using the iPod jack, observe the following instructions. Failure to do so could result in accident or injury.

- **Take care that the iPod or cords do not hinder vehicle operation.**
- **Do not adjust the iPod while driving.**

Cigarette lighter

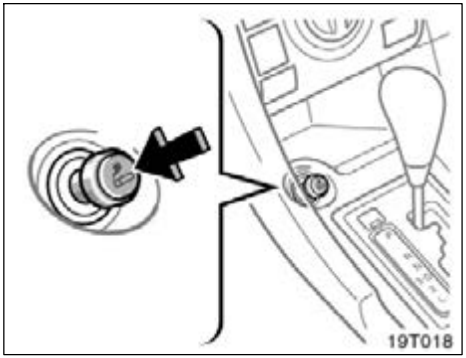

To use the cigarette lighter, press it in. After it finishes heating up, it automatically pops out ready for use.

If the engine is not running, the engine switch must be in the "ACC" position.

Do not hold the cigarette lighter pressed in.

Use a genuine cigarette lighter or equivalent for replacement.

Power outlet

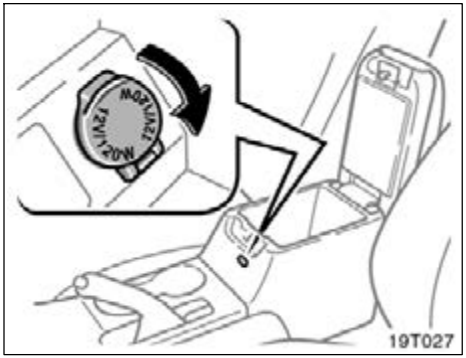

The power outlet located in the lower box contained in the rear console box is designed for power supply for car accessories.

The engine switch must be in the “ACC” or “ON” position for the power outlet to be used.

NOTICE

- ***To prevent the fuse from being blown, do not use the electricity over the total vehicle capacity of 12V/120W.***
- ***To prevent the battery from being discharged, do not use the power outlet longer than necessary when the engine is not running.***
- ***Close the power outlet lid when the power outlet is not in use. Inserting anything other than an appropriate plug that fits the outlet, or allowing any liquid to get into the outlet may cause electrical failure or short circuits.***

Glove box

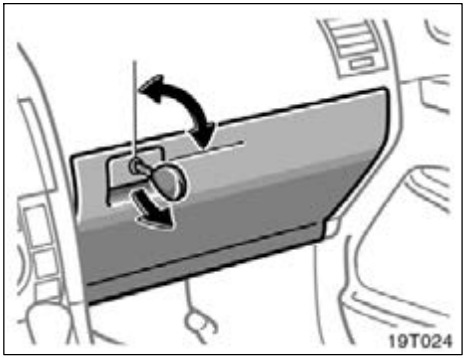

To use the glove box, do this.

To open: Pull the lever.

To lock: Insert the master key and turn it clockwise.

⚠ CAUTION

To reduce the chance of injury in case of an accident or a sudden stop, always keep the glove box door closed while driving.

Auxiliary box

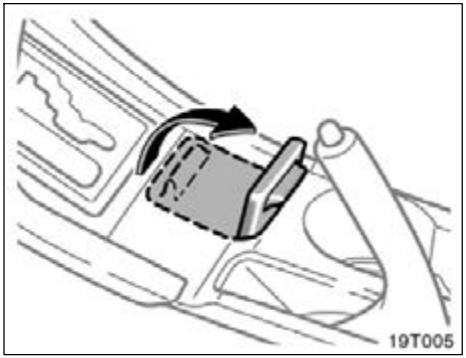

To use the auxiliary box, open it as shown in the illustrations.

⚠ CAUTION

- To reduce the chance of injury in case of an accident or a sudden stop, always keep the auxiliary box closed while driving.
- Do not use the auxiliary box as an ashtray.

Rear console box

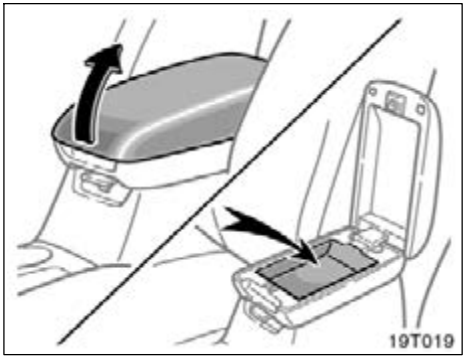

UPPER TRAY

To use the upper tray, raise the console box lid without touching the lock release lever.

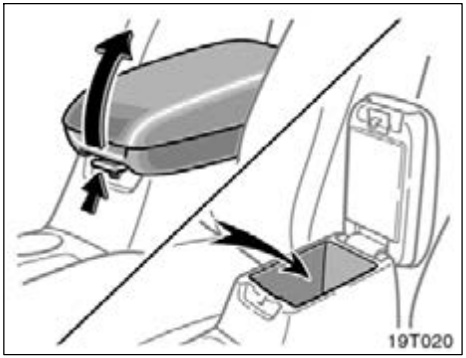

CONSOLE BOX

To use the rear console box, pull up the lock release lever while raising the rear console box lid.

⚠ CAUTION

To reduce the chance of injury in case of an accident or a sudden stop, always keep the console box closed while driving.

Cup holders

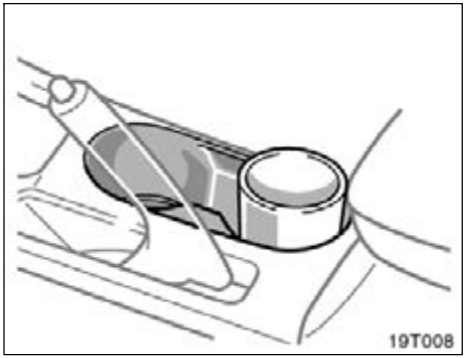

Front

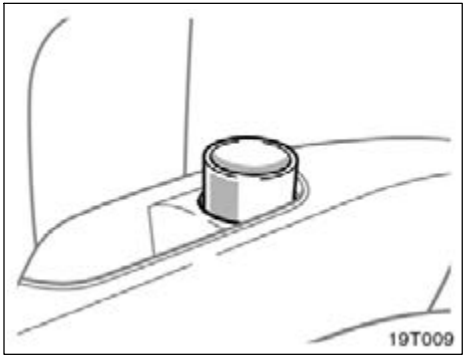

Rear

The cup holder is designed for holding cups or drink–cans securely in its holes.

⚠ CAUTION

Do not place anything else other than cups or drink–cans in the cup holder, as such items may be thrown about and possibly injure people in the vehicle during sudden braking or in an accident. If possible, cover hot drinks to prevent burns.

Tie–down hooks

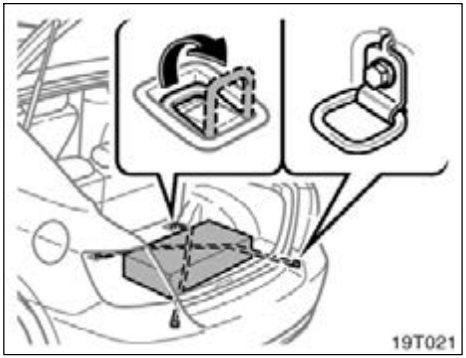

To secure your luggage, use the tie–down hooks as shown above.

See "—Stowage precautions" on page 179 for precautions when loading luggage.

⚠ CAUTION

To avoid personal injury, keep the tie–down hooks retracted when not in use.

Grocery bag hooks

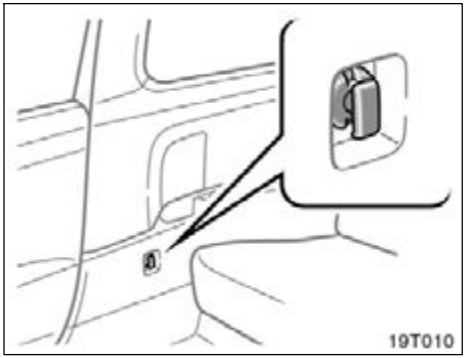

On quarter trims on both sides

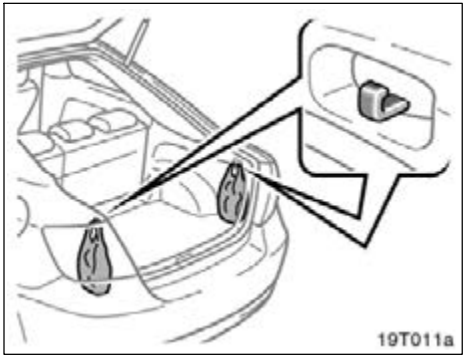

Both sides of luggage compartment

These hooks are designed to hang things like grocery bags.

NOTICE

To prevent damage to the hook, do not hang any object heavier than 4 kg (8.8 lb.) on it.

Luggage storage box

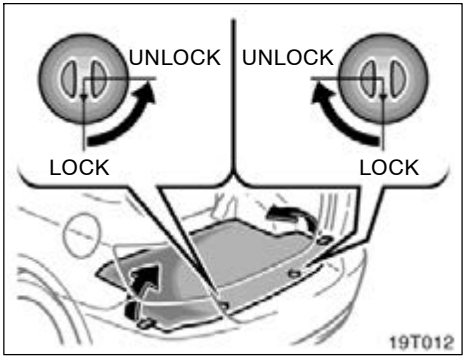

To open the luggage storage box, turn the knobs to the "UNLOCK" position and open the lid. To close the luggage storage box, lower the lid and turn the knobs to the "LOCK" position.

⚠ CAUTION

To reduce the chance of death or serious injury in case of an accident or a sudden stop, always keep the luggage storage box closed and locked while driving.

Luggage cover

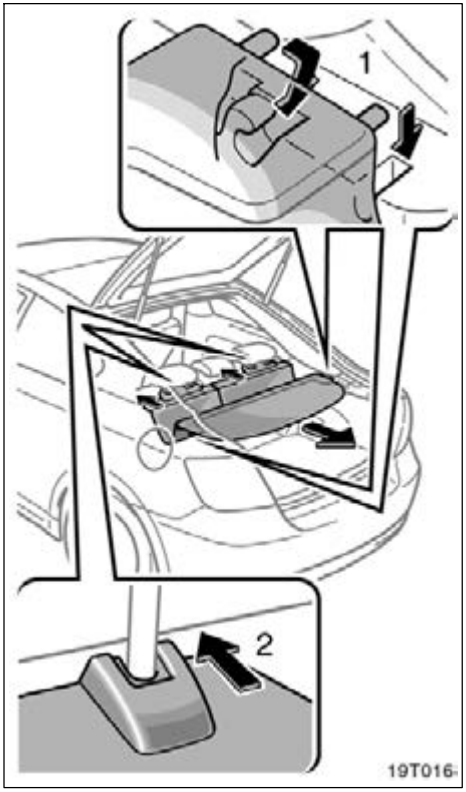

To use the luggage cover:

1. **Hook the back of the luggage cover.**
2. **Attach the front hooks of the luggage cover to the head restraint.**

If the luggage cover cannot be hooked, recline the rear seats a little.

⚠ CAUTION

- **Do not place anything on the luggage cover. Such items may be thrown about and possibly injure people in the vehicle during sudden braking or a collision.**
- **To reduce the chance of death or serious injury in case of an accident or a sudden stop, make sure the luggage cover is secured in place.**

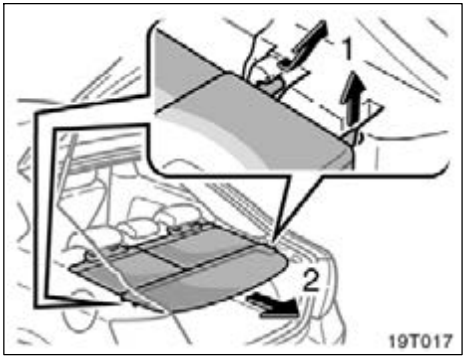

To remove the luggage cover:

1. **Unhook the back of the luggage cover.**
2. **Pull the cover toward the back.**

When you remove the luggage cover, place it somewhere other than the passenger compartment. This will prevent passengers from being injured in the event of a sudden stop or an accident.

Floor mat

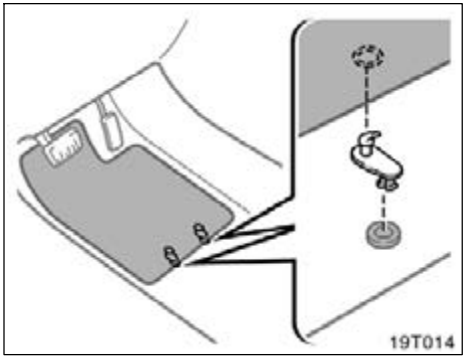

Use a floor mat of the correct size.

If the vehicle carpet and floor mat have 2 holes, then they are designed for use with locking clips. Attach the floor mat to the vehicle carpet using the clips. Lock the clips into the holes in the vehicle carpet.

⚠ CAUTION

Observe the following precautions. Failure to do so may result in the floor mat slipping and interfering with the movement of the pedals during driving, resulting in an accident.

- **Make sure the floor mat is properly placed on the vehicle carpet and the correct side faces upward.**
- **Do not place floor mats on top of existing mats.**

Side mudguard

The side mudguard is designed to prevent mud from sticking to the vehicle body while driving.

NOTICE

Do not step on the side mudguard, or your vehicle may be damaged.

SECTION 2

INFORMATION BEFORE DRIVING YOUR SCION

Information before driving your SCION

Break–in period 152
Fuel 152
Fuel pump shut off system 154
Operation in foreign countries 154
Three–way catalytic converters 154
Engine exhaust cautions 156
Facts about engine oil consumption 157
Iridium–tipped spark plugs 158
Brake system 158
Brake pad wear limit indicators 161
Your Scion's identification 162
Theft prevention labels 163
Suspension and chassis 163
Tire information 164
Vehicle load limits 178
Cargo and luggage 179
Types of tires 182

Break–in period

Drive gently and avoid high speeds.

Your vehicle does not need an elaborate break–in. But following a few simple tips for the first 1600 km (1000 miles) can add to the future economy and long life of your vehicle:

- Avoid full throttle acceleration when starting and driving.
- Avoid racing the engine.
- Try to avoid hard stops during the first 300 km (200 miles).
- Do not drive slowly with the manual transmission in a high gear.
- Do not drive for a long time at any single speed, either fast or slow.

Fuel

FUEL TYPE

Your new vehicle must use only unleaded gasoline.

To help prevent gas station mix–ups, your Scion has a smaller fuel tank opening. The special nozzle on pumps with unleaded fuel will fit it, but the larger standard nozzle on pumps with leaded gas will not.

At a minimum, the gasoline you use should meet specifications of ASTM D4814 in the U.S.A. and CGSB 3.5–M93 in Canada.

NOTICE

- ***Do not use improper fuels. If improper fuels are used the engine will be damaged.***
- ***Do not use leaded gasoline. Use of leaded gasoline will cause the three–way catalytic converter to lose its effectiveness and the emission control system to function improperly. Also, this can increase maintenance costs.***

OCTANE RATING

Select Octane Rating 87 (Research Octane Number 91) or higher.

Use of unleaded gasoline with an octane rating lower than 87 may result in engine knocking. Persistent knocking can lead to engine damage.

If your engine knocks...

If you detect heavy knocking even when using the recommended fuel, or if you hear steady knocking while holding a steady speed on level roads, consult your Scion dealer.

However, occasionally, you may notice light knocking for a short time while accelerating or driving up hills. This is normal and there is no need for concern.

GASOLINES CONTAINING DETERGENT ADDITIVES

Scion recommends the use of gasoline that contain detergent additives to avoid build–up of engine deposits.

However, all gasoline sold in the U.S. contains detergent additives to keep clean and/or clean intake systems.

QUALITY GASOLINE

Automotive manufacturers in the U.S., Europe and Japan have developed a specification for quality fuel named World–Wide Fuel Charter (WWFC) that is expected to be applied worldwide. The WWFC consists of four categories that depend on required emission levels. In the U.S., category 4 has been adopted. The WWFC improves air quality by providing for better emissions in vehicle fleets, and customer satisfaction through better vehicle performance.

CLEANER BURNING GASOLINE

Cleaner burning gasoline, including reformulated gasoline that contains oxygenates such as ethanol or MTBE is available in many areas.

Scion recommends the use of cleaner burning gasoline and appropriately blended reformulated gasoline. These types of gasoline provide excellent vehicle performance, reduce vehicle emissions, and improve air quality.

OXYGENATES IN GASOLINE

Scion allows the use of oxygenate blended gasoline where the oxygenate content is up to 10% ethanol or 15% MTBE. If you use gasohol in your Scion, be sure that it has an octane rating no lower than 87.

Scion does not recommend the use of gasoline containing methanol.

GASOLINE CONTAINING MMT

Some gasoline contains an octane enhancing additive called MMT (Methylcyclopentadienyl Manganese Tricarbonyl).

Scion does not recommend the use of gasoline that contains MMT. If fuel containing MMT is used, your emission control system may be adversely affected. The Malfunction Indicator Lamp on the instrument cluster may come on. If this happens, contact your Scion dealer for service.

GASOLINE QUALITY

In a very few cases, you may experience drivability problems caused by the particular gasoline that you are using. If you continue to have unacceptable drivability, try changing gasoline brands. If this does not rectify your problem, then consult your Scion dealer.

NOTICE

- ***Do not use gasohol other than stated above. It will cause fuel system damage or vehicle performance problems.***
- ***If drivability problems are encountered (poor hot starting, vaporizing, engine knock, etc.), discontinue the use.***
- ***Take care not to spill gasohol during refueling. Gasohol may cause paint damage.***

FUEL TANK CAPACITY

55 L (14.5 gal., 12.1 Imp.gal.)

Fuel pump shut off system

The fuel pump shut off system stops supplying fuel to the engine to minimize the risk of fuel leakage when the engine stalls or an airbag inflates upon collision. To restart the engine after the fuel pump shut off system activates, turn the engine switch to “ACC” or “LOCK” position once and start it.

⚠ CAUTION

Inspect the ground under the vehicle before restarting the engine. If you find that fuel has leaked onto the ground, the fuel system that has been damaged and is in need of repair. In this case, do not restart the engine.

Operation in foreign countries

If you plan to drive your Scion in another country...

First, comply with the vehicle registration laws.

Second, confirm the availability of the correct fuel (unleaded and minimum octane number).

Three–way catalytic converters

The three–way catalytic converter is an emission control device installed in the exhaust system.

The purpose is to reduce pollutants in the exhaust gas.

⚠ CAUTION

- **Keep people and combustible materials away from the exhaust pipe while the engine is running. The exhaust gas is very hot.**
- **Do not drive, idle or park your vehicle over anything that might burn easily such as grass, leaves, paper or rags.**
- **Do not leave anything that may burn easily, such as paper or rags, in the engine compartment.**
- **Do not touch the exhaust pipe while the engine is running or immediately after turning the engine off. Doing so may cause burns.**

NOTICE

A large amount of unburned gases flowing into the three–way catalytic converter may cause it to overheat and create a fire hazard. To prevent this and other damage, observe the following precautions:

- ***Use only unleaded gasoline.***
- ***Do not drive with an extremely low fuel level; running out of fuel could cause the engine to misfire, creating an excessive load on the three–way catalytic converter.***
- ***Do not allow the engine to run at idle speed for more than 20 minutes.***
- ***Avoid racing the engine.***
- ***Do not push–start or pull–start your vehicle.***
- ***Do not turn off the ignition while the vehicle is moving.***
- ***Keep your engine in good running order. Malfunctions in the engine electrical system, electronic ignition system/distributor ignition system or fuel system could cause an extremely high three–way catalytic converter temperature.***
- ***If the engine becomes difficult to start or stalls frequently, take your vehicle in for a check–up as soon as possible. Remember, your Scion dealer knows your vehicle and its three–way catalytic converter system best.***
- ***To ensure that the three–way catalytic converter and the entire emission control system operate properly, your vehicle must receive the periodic inspections required by the Scion Maintenance Schedule. For scheduled maintenance information, refer to the "Scheduled Maintenance Guide" or "Owner's Manual Supplement".***

Engine exhaust cautions

CAUTION

- Exhaust gases include harmful carbon monoxide (CO) that is colorless and odorless. Inhaling exhaust gases may lead to death or a serious health hazard.
- The exhaust should be checked occasionally. If there is a hole or crack caused by corrosion, damage to a joint or abnormal exhaust noise, be sure to have the vehicle inspected and repaired by your Scion dealer. Failure to do so may allow exhaust gases to enter the vehicle, resulting in death or a serious health hazard.
- If the vehicle is in a poorly ventilated area, turn the engine off. In a closed area, such as a garage, exhaust gases may collect and enter the vehicle. This may lead to death or a serious health hazard.

- Do not remain for a long time in a parked vehicle with the engine running. If it is unavoidable, however, do so only in an unconfined area and adjust the heating or cooling system to force outside air into the vehicle.
- Keep the back door closed while driving. An open or unsealed back door may cause exhaust gases to be drawn into the vehicle.
- To allow proper operation of your vehicle's ventilation system, keep the inlet grilles in front of the windshield clear of snow, leaves, or other obstructions.
- If the smell of exhaust is noticed inside the vehicle, open the windows and check that the back door is closed. Large amounts of exhaust in the vehicle can cause driver drowsiness and an accident, resulting in death or a serious health hazard. Have the vehicle inspected by your Scion dealer immediately.

- Do not leave the engine running in an area with snow build–up, or where it is snowing. If snowbanks build up around the vehicle while the engine is running, exhaust gases may collect and enter the vehicle. This may lead to death or a serious health hazard.
- When taking a nap in the vehicle, always turn the engine off. Otherwise, you may accidentally move the shift lever or depress the accelerator pedal, which could cause an accident or fire due to engine overheating. Additionally, if the vehicle is parked in a poorly ventilated area, exhaust gases may collect and enter the vehicle, leading to death or a serious health hazard.

Facts about engine oil consumption

FUNCTIONS OF ENGINE OIL

Engine oil has the primary functions of lubricating and cooling the inside of the engine, and plays a major role in maintaining the engine in proper working order.

ENGINE OIL CONSUMPTION

It is normal that an engine should consume some engine oil during normal engine operation. The causes of oil consumption in a normal engine are as follows.

- Oil is used to lubricate pistons, piston rings and cylinders. A thin film of oil is left on the cylinder wall when a piston moves downwards in the cylinder. High negative pressure generated when the vehicle is decelerating sucks some of this oil into the combustion chamber. This oil as well as some part of the oil film left on the cylinder wall is burned by the high temperature combustion gases during the combustion process.
- Oil is also used to lubricate the stems of the intake valves. Some of this oil is sucked into the combustion chamber together with the intake air and is burned along with the fuel. High temperature exhaust gases also burn the oil used to lubricate the exhaust valve stems.

The amount of engine oil consumed depends on the viscosity of the oil, the quality of the oil and the conditions the vehicle is driven under.

More oil is consumed by high–speed driving and frequent acceleration and deceleration.

A new engine consumes more oil, since its pistons, piston rings and cylinder walls have not become conditioned.

Oil consumption: Max. 1.0 L per 1000 km (1.1 qt./600 miles, 0.9 Imp.qt./600 miles)

When judging the amount of oil consumption, note that the oil may become diluted and make it difficult to judge the true level accurately.

As an example, if a vehicle is used for repeated short trips, and consumes a normal amount of oil, the dipstick may not show any drop in the oil level at all, even after 1000 km (600 miles) or more. This is because the oil is gradually becoming diluted with fuel or moisture, making it appear that the oil level has not changed.

The diluting ingredients evaporate out when the vehicle is then driven at high speeds, as on an express way, making it appear that oil is excessively consumed after driving at high speeds.

IMPORTANCE OF ENGINE OIL LEVEL CHECK

One of the most important points in proper vehicle maintenance is to keep the engine oil at the optimum level so that oil function will not be impaired. Therefore, it is essential that the oil level be checked regularly. Scion recommends that the oil level be checked every time you refuel the vehicle.

NOTICE

Failure to check the oil level regularly could lead to serious engine trouble due to insufficient oil.

For detailed information on oil level check, see “Checking the engine oil level” on page 236.

Iridium–tipped spark plugs

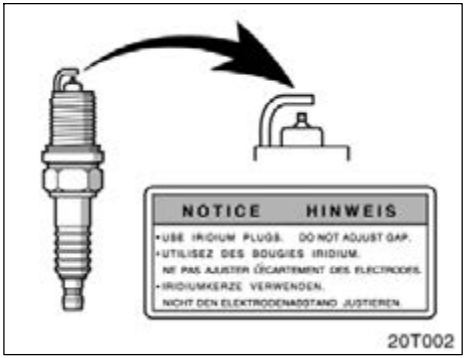

Your engine is fitted with iridium–tipped spark plugs.

NOTICE
Use only iridium–tipped spark plugs. Do not adjust gaps for engine performance or smooth drivability.

Brake system

The tandem master cylinder brake system is a hydraulic system with two separate sub–systems. If either sub–system should fail, the other will still work. However, the pedal will be harder to press, and your stopping distance will increase. Also, the brake system warning light may come on.

⚠ CAUTION
Do not drive your vehicle with only a single brake system. Have your brakes fixed immediately.

BRAKE BOOSTER

The brake booster uses engine vacuum to power–assist the brakes. If the engine should quit while you are driving, you can bring the vehicle to a stop with normal pedal pressure. There is enough reserved vacuum for one or two stops but no more!

⚠ CAUTION

- **Do not pump the brake pedal if the engine stalls. Each push on the pedal uses up your reserved vacuum.**
- **Even if the power assist is completely lost, the brakes will still work. But you will have to push the pedal hard, much harder than normal. And your braking distance will increase.**

ANTI–LOCK BRAKE SYSTEM

The anti–lock brake system is designed to automatically help prevent lock–up of the wheels during a sudden braking or braking on slippery road surfaces. This assists in providing directional stability and steering performance of the vehicle under these circumstances.

Effective way to press the ABS brake pedal:
When the anti–lock brake system function is in action, you may feel the brake pedal pulsating and hear a noise. In this situation, to let the anti–lock brake system work for you, just hold the brake pedal down more firmly. Do not pump the brake in a panic stop. This will result in reduced braking performance.

The anti–lock brake system becomes operative after the vehicle has accelerated to a speed in excess of approximately 10 km/h (6 mph). It stops operating when the vehicle decelerates to a speed below approximately 5 km/h (3 mph).

Depressing the brake pedal on slippery road surfaces such as on a manhole cover, a steel plate at a construction site, joints in a bridge, etc. on a rainy day tends to activate the anti–lock brake system.

You may hear a click or motor sound in the engine compartment for a few seconds when the engine is started or just after the vehicle begins to move. This means that the anti–lock brake system is in the self–check mode, and does not indicate a malfunction.

When the anti–lock brake system is activated, the following conditions may occur. They do not indicate a malfunction of the system:

- You may hear the anti–lock brake system operating and feel the brake pedal pulsating and the vibrations of the vehicle body and steering wheel. You may also hear the motor sound in the engine compartment even after the vehicle is stopped.
- At the end of the anti–lock brake system activation, the brake pedal may move a little forward.

⚠ CAUTION

Do not overestimate the anti–lock brake system: Although the anti–lock brake system assists in providing vehicle control, it is still important to drive with all due care and maintain a moderate speed and safe distance from the vehicle in front of you, because there are limits to the vehicle stability and effectiveness of steering wheel operation even with the anti–lock brake system on.

If tire grip performance exceeds its capability, or if hydroplaning occurs during high speed driving in the rain, the anti–lock brake system does not provide vehicle control.

Anti–lock brake system is not designed to shorten the stopping distance: Always drive at a moderate speed and maintain a safe distance from the vehicle in front of you. Compared with vehicles without an anti–lock brake system, your vehicle may require a longer stopping distance in the following cases:

- **Driving on rough, gravel or snow–covered roads.**
- **Driving with tire chains installed.**
- **Driving over the steps such as the joints on the road.**
- **Driving on roads where the road surface is pitted or has other differences in surface height.**

Install all 4 tires of specified size at appropriate pressure: The anti–lock brake system detects vehicle speeds using the speed sensors for respective wheels' turning speeds. The use of tires other than specified may fail to detect the accurate turning speed resulting in a longer stopping distance.

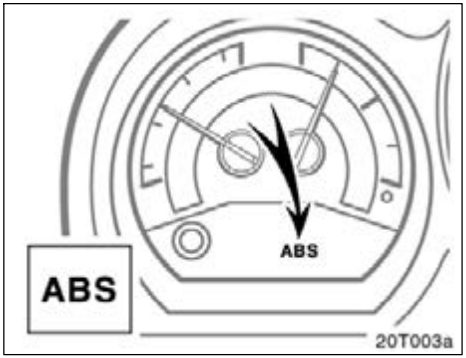

"ABS" warning light

This light comes on when the engine switch is turned to the "ON" position. If the anti–lock brake system works properly, the light turns off after a few seconds. Thereafter, if the system malfunctions, the light comes on again.

When the "ABS" warning light is on (and the brake system warning light is off), the anti–lock brake system does not operate, but the brake system still operates conventionally.

When the “ABS” warning light is on (and the brake system warning light is off), the anti–lock brake system does not operate so that the wheels could lock up during a sudden braking or braking on slippery road surfaces.

If any of the following conditions occurs, this indicates a malfunction somewhere in the components monitored by the warning light system. Contact your Scion dealer as soon as possible to service the vehicle.

- When the engine switch is turned to the “ON” position, the light does not come on or remains on.
- The light comes on while you are driving.

A warning light turning on briefly during operation does not indicate a problem.

CAUTION

If the “ABS” warning light remains on together with the brake system warning light, immediately stop your vehicle at a safe place and contact your Scion dealer.

In this case, not only the anti–lock brake system will fail but also the vehicle will become extremely unstable during braking.

DRUM–IN–DISC TYPE PARKING BRAKE SYSTEM

Your vehicle has a drum–in–disc type parking brake system. This type of brake system needs bedding–down of the brake shoes periodically or whenever the parking brake shoes and/or drums are replaced.

Have your Scion dealer perform the bedding–down.

Brake pad wear limit indicators

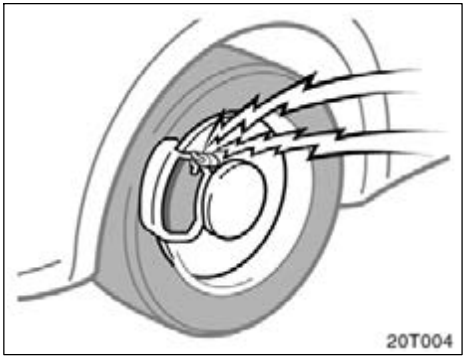

The brake pad wear limit indicators on your disc brakes give a warning noise when the brake pads are worn to where replacement is required.

If you hear a squealing or scraping noise while driving, have the brake pads checked and replaced by your Scion dealer as soon as possible. Expensive rotor damage can result if the pads are not replaced when necessary.

Your Scion's identification—
—Vehicle identification number

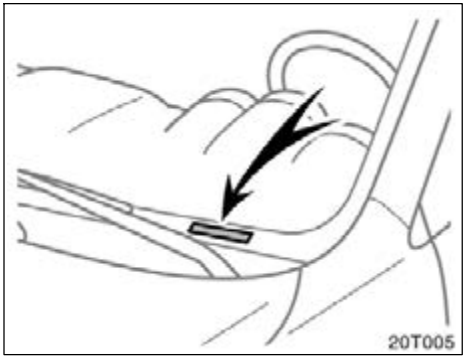

The vehicle identification number (VIN) is the legal identifier for your vehicle. This number is on the left top of the instrument panel, and can be seen through the windshield from outside.

This is the primary identification number for your Scion. It is used in registering the ownership of your vehicle.

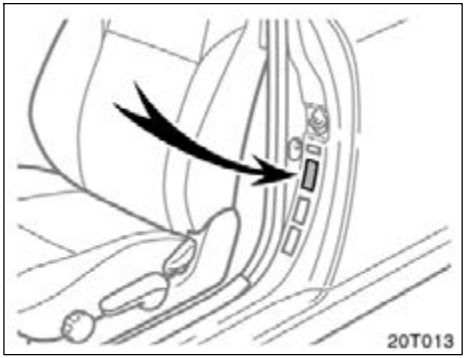

The vehicle identification number (VIN) is also on the Certification Label.

—Engine number

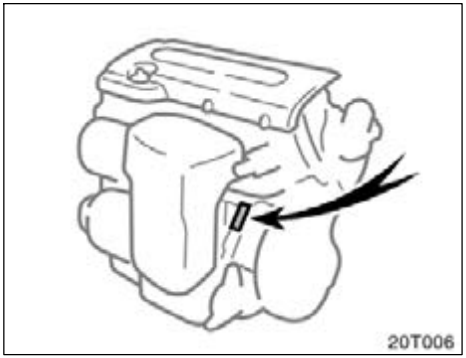

The engine number is stamped on the engine block as shown.

Theft prevention labels

Your new vehicle carries theft prevention labels which are approximately 56 mm (2.20 in.) by 16 mm (0.63 in.).

The purpose of these labels is to reduce the incidence of vehicle thefts by facilitating the tracing and recovery of parts from stolen vehicles. The label is designed so that once it is applied to a surface, any attempt to remove it will result in destroying the integrity of the label. Transferring these labels intact from one part to another will be impossible.

NOTICE

You should not attempt to remove the theft prevention labels as it may violate certain state or federal laws.

Suspension and chassis

CAUTION

Do not modify the suspension/chassis with lift kits, spacers, springs, etc. It can cause dangerous handling characteristics, resulting in loss of control.

Tire information—
—Tire symbols (Standard tire)

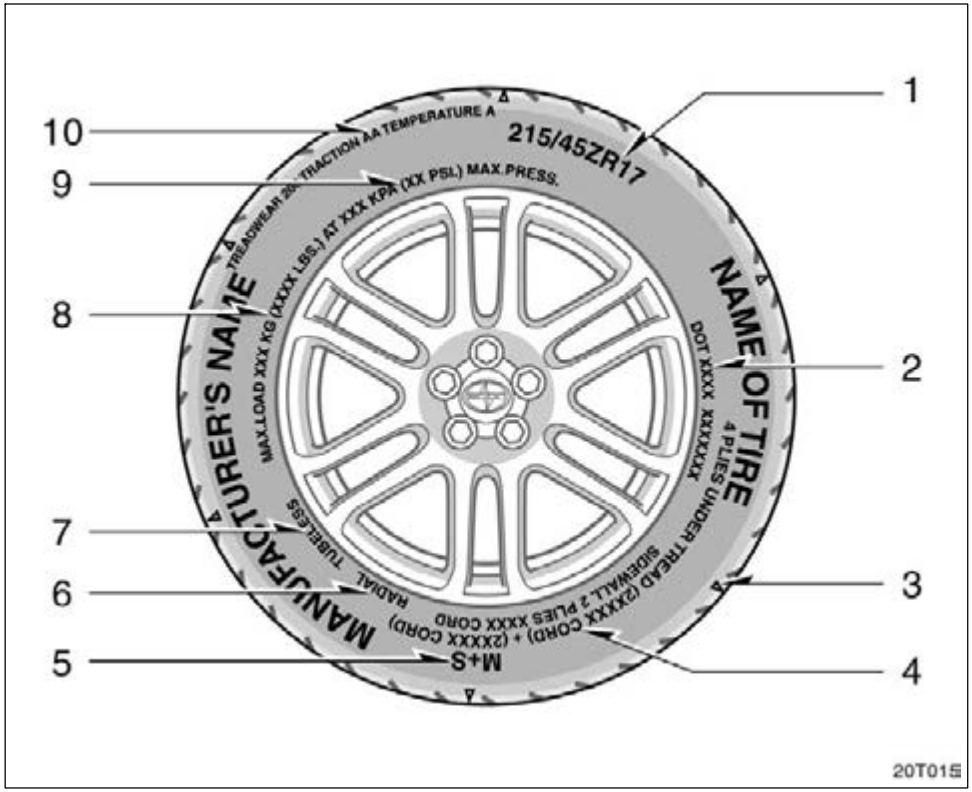

This illustration indicates typical tire symbols.

1. **Tire size—**For details, see “Tire size” on page 168.
2. **DOT and Tire Identification Number (TIN)—**For details, see “DOT and Tire Identification Number (TIN)” on page 167.
3. **Location of treadwear indicators—**For details, see “Checking and replacing tires” on page 243.
4. **Tire ply composition and materials—**Plies mean a layer of rubber–coated parallel cords. Cords mean the strands forming the plies in the tire.
5. **Summer tire or all season tire—**An all season tire has “M+S” on the sidewall. The tire not marked with “M+S” is a summer tire. For details, see “Types of tires” on page 182.
6. **Radial tires or bias–ply tires—**A radial tire has “radial” on the sidewall. A tire not marked with “radial” is a bias–ply tire.

7. **“TUBELESS” or “TUBE TYPE”—**Tubeless tire does not have a tube inside the tire and air is directly filled in the tire, avoiding rapid air leakage even if the tire is nailed and preventing the tire from bursting with a shock. Tube type tire has a tube inside the tire and that tube maintains the air pressure.
8. **Load limit at maximum cold tire inflation pressure—**For details, see “Checking and replacing tires” on page 243.
9. **Maximum cold tire inflation pressure—**This means the pressure to which a tire may be inflated. For recommended cold tire inflation pressure, see “Tires” on page 265.
10. **Uniform tire quality grading—**For details, see “Uniform tire quality grading” that follows.

—Tire symbols
(Compact spare tire)

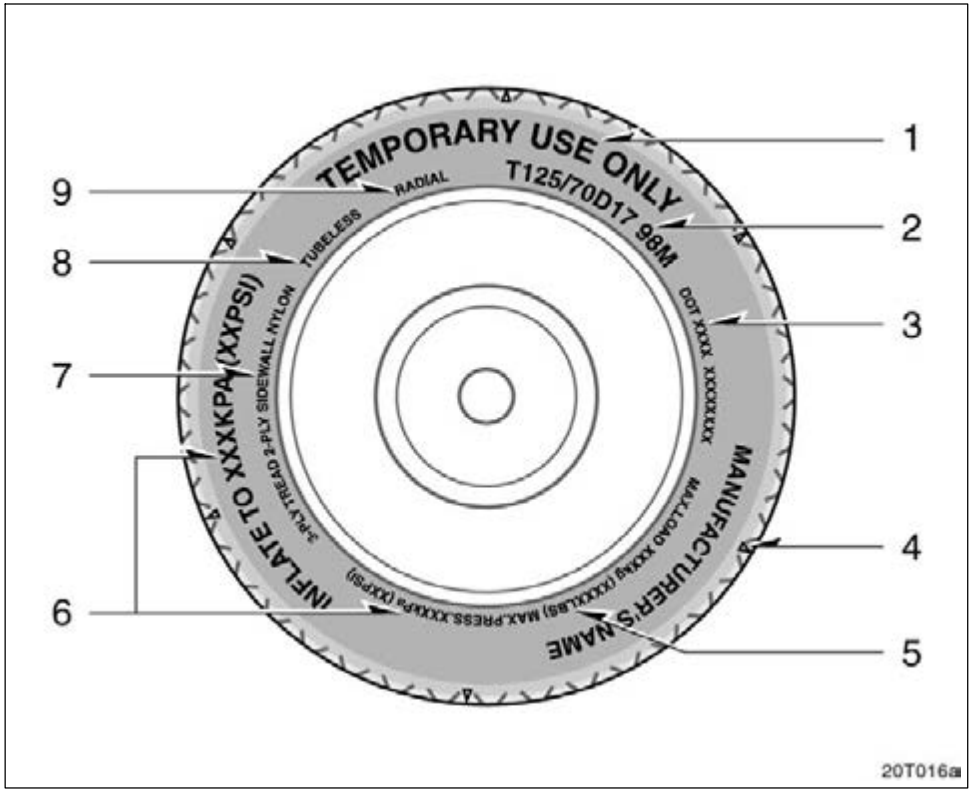

This illustration indicates typical tire symbols.

1. **"TEMPORARY USE ONLY"—**A compact spare tire is identified by the phrase "TEMPORARY USE ONLY" molded into its sidewall. This tire is designed for temporary emergency use only. For details, see "Compact spare tire" on page 200.
2. **Tire size—**For details, see "Tire size" on page 168.
3. **DOT and Tire Identification Number (TIN)—**For details, see "DOT and Tire Identification Number (TIN)" on page 167.
4. **Location of treadwear indicators—**For details, see "Checking and replacing tires" on page 243.
5. **Load limit at maximum cold tire inflation pressure—**For details, see "Checking and replacing tires" on page 243.

6. **Maximum cold tire inflation pressure—**This means the pressure to which a tire may be inflated. For recommended cold tire inflation pressure, see “Tires” on page 265.
7. **Tire ply composition and materials—**Plies mean a layer of rubber–coated parallel cords. Cords mean the strands forming the plies in the tire.
8. **“TUBELESS” or “TUBE TYPE” —**A tubeless tire does not have a tube inside the tire and air is directly filled in the tire. A tube type tire has a tube inside the tire and that tube maintains the air pressure.
9. **Radial tires or bias–ply tires—**A radial tire has “RADIAL” on the sidewall. The tire not marked with “RADIAL” is a bias–ply tire.

—DOT and Tire Identification Number (TIN)

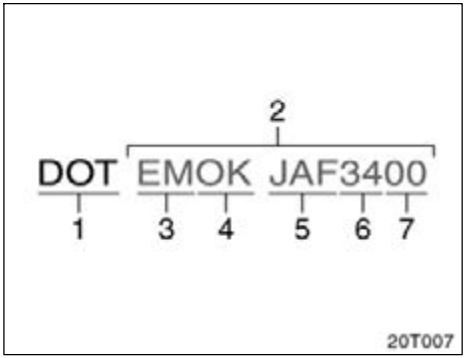

This illustration indicates typical DOT and Tire Identification Number (TIN).

1. “DOT” symbol
2. Tire Identification Number (TIN)
3. Tire manufacturer’s identification mark
4. Tire size code
5. Manufacturer’s optional tire type code (3 or 4 letters)
6. Manufacturing week
7. Manufacturing year

The “DOT” symbol certifies that the tire conforms to applicable Federal motor vehicle safety standards.

—Tire size

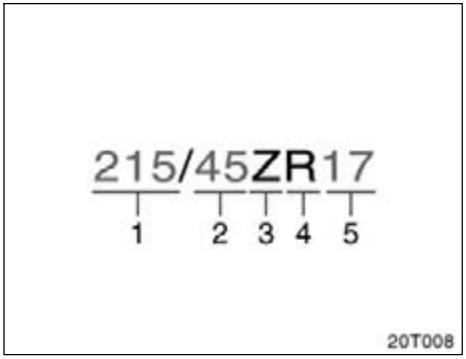

Standard tire

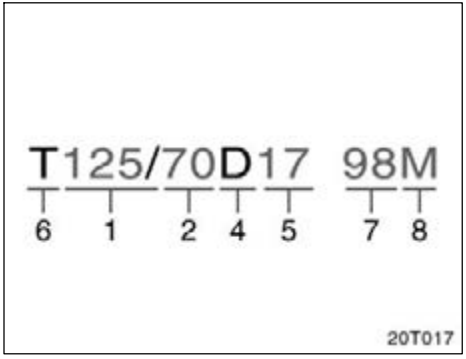

Compact spare tire

This illustration indicates typical tire size.

1. Section width (in millimeters)
2. Aspect ratio (tire height to section width)
3. Speed category (alphabet with one letter)
4. Tire construction code (R=Radial, D=Diagonal)
5. Wheel diameter (in inches)
6. Tire use (P=Passenger car, T=Temporary use)
7. Load index (2 digits or 3 digits)
8. Speed symbol (alphabet with one letter)

1. Section width
2. Tire height
3. Wheel diameter

—Name of each section of tire

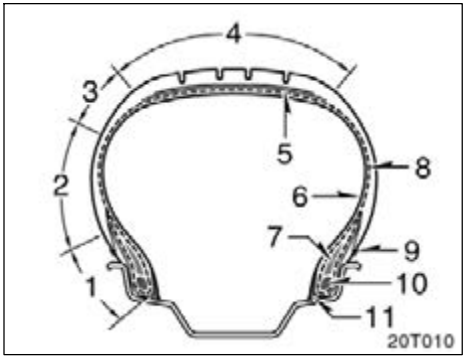

1. Bead
2. Sidewall
3. Shoulder
4. Tread
5. Belt
6. Inner liner
7. Reinforcing rubber
8. Carcass
9. Rim lines
10. Bead wires
11. Chafer

—Uniform Tire Quality Grading

This information has been prepared in accordance with regulations issued by the National Highway Traffic Safety Administration of the U.S. Department of Transportation. It provides the purchasers and/or prospective purchasers of Scion vehicles with information on uniform tire quality grading.

Your Scion dealer will help answer any questions you may have as you read this information.

DOT quality grades—All passenger vehicle tires must conform to Federal Safety Requirements in addition to these grades. Quality grades can be found where applicable on the tire sidewall between tread shoulder and maximum section width. For example: Treadwear 200 Traction AA Temperature A

Treadwear—The treadwear grade is a comparative rating based on the wear rate of the tire when tested under controlled conditions on a specified government test course. For example, a tire graded 150 would wear one and a half (1–1/2) times as well on the government course as a tire graded 100. The relative performance of tires depends upon the actual conditions of their use, however, and may depart significantly from the norm due to variations in driving habits, service practices and differences in road characteristics and climate.

Traction AA, A, B, C—The traction grades, from highest to lowest, are AA, A, B, and C, and they represent the tire's ability to stop on wet pavement as measured under controlled conditions on specified government test surfaces of asphalt and concrete. A tire marked C may have poor traction performance.

Warning: The traction grade assigned to this tire is based on braking (straight ahead) traction tests and does not include cornering (turning) traction.

Temperature A, B, C—The temperature grades are A (the highest), B, and C, representing the tire's resistance to the generation of heat and its ability to dissipate heat when tested under controlled conditions on a specified indoor laboratory test wheel. Sustained high temperature can cause the material of the tire to degenerate and reduce tire life, and excessive temperature can lead to sudden tire failure. The grade C corresponds to a level of performance which all passenger car tires must meet under the Federal Motor Vehicle Safety Standard No. 109. Grades B and A represent higher levels of performance on the laboratory test wheel than the minimum required by law.

Warning: The temperature grades for this tire are established for a tire that is properly inflated and not overloaded. Excessive speed, underinflation, or excessive loading, either separately or in combination, can cause heat buildup and possible tire failure.

—Glossary of tire terminology

Tire related term	Meaning
Cold tire inflation pressure	tire inflation pressure when the vehicle has been parked for at least 3 hours or more, or it has not been driven more than 1.5 km or 1 mile under that condition
Maximum inflation pressure	the maximum cold inflation pressure to which a tire may be inflated and it is shown on the sidewall of the tire
Recommended inflation pressure	cold tire inflation pressure recommended by a manufacturer
Accessory weight	the combined weight (in excess of those standard items which may be replaced) of automatic transmission, power steering, power brakes, power windows, power seats, radio, and heater, to the extent that these items are available as factory–installed equipment (whether installed or not)
Curb weight	the weight of a motor vehicle with standard equipment including the maximum capacity of fuel, oil, and coolant, and, if so equipped, air conditioning and additional weight optional engine
Maximum loaded vehicle weight	the sum of— (a) curb weight; (b) accessory weight; (c) vehicle capacity weight; and (d) production options weight
Normal occupant weight	68 kg (150 lb.) times the number of occupants specified in the second column of Table 1 that follows

Tire related term	Meaning
Occupant distribution	distribution of occupants in a vehicle as specified in the third column of Table 1 that follows
Production options weight	the combined weight of those installed regular production options weighing over 2.3 kg (5 lb.) in excess of those standard items which they replace, not previously considered in curb weight or accessory weight, including heavy duty brakes, ride levelers, roof rack, heavy duty battery, and special trim
Rim	a metal support for a tire or a tire and tube assembly upon which the tire beads are seated
Rim diameter (Wheel diameter)	nominal diameter of the bead seat
Rim size designation	rim diameter and width
Rim type designation	the industry of manufacturer's designation for a rim by style or code
Rim width	nominal distance between rim flanges
Vehicle capacity weight (Total load capacity)	the rated cargo and luggage load plus 68 kg (150 lb.) times the vehicle's designated seating capacity
Vehicle maximum load on the tire	the load on an individual tire that is determined by distributing to each axle its share of the maximum loaded vehicle weight and dividing by two
Vehicle normal load on the tire	the load on an individual tire that is determined by distributing to each axle its share of the curb weight, accessory weight, and normal occupant weight (distributed in accordance with Table 1 that follows) and dividing by two

Tire related term	Meaning
Weather side	the surface area of the rim not covered by the inflated tire
Bead	the part of the tire that is made of steel wires, wrapped or reinforced by ply cords and that is shaped to fit the rim
Bead separation	a breakdown of the bond between components in the bead
Bias ply tire	a pneumatic tire in which the ply cords that extend to the beads are laid at alternate angles substantially less than 90 degrees to the centerline of the tread
Carcass	the tire structure, except tread and sidewall rubber which, when inflated, bears the load
Chunking	the breaking away of pieces of the tread or sidewall
Cord	the strands forming the plies in the tire
Cord separation	the parting of cords from adjacent rubber compounds
Cracking	any parting within the tread, sidewall, or innerliner of the tire extending to cord material
CT	a pneumatic tire with an inverted flange tire and rim system in which the rim is designed with rim flanges pointed radially inward and the tire is designed to fit on the underside of the rim in a manner that encloses the rim flanges inside the air cavity of the tire
Extra load tire	a tire designed to operate at higher loads and at higher inflation pressures than the corresponding standard tire

Tire related term	Meaning
Groove	the space between two adjacent tread ribs
Innerliner	the layer(s) forming the inside surface of a tubeless tire that contains the inflating medium within the tire
Innerliner separation	the parting of the innerliner from cord material in the carcass
Intended outboard sidewall	(A) the sidewall that contains a whitewall, bears white lettering or bears manufacturer, brand, and/or model name molding that is higher or deeper than the same molding on the other sidewall of the tire, or (B) the outward facing sidewall of an asymmetrical tire that has a particular side that must always face outward when mounted on a vehicle
Light truck (LT) tire	a tire designated by its manufacturer as primarily intended for use on lightweight trucks or multipurpose passenger vehicles
Load rating	the maximum load that a tire is rated to carry for a given inflation pressure
Maximum load rating	the load rating for a tire at the maximum permissible inflation pressure for that tire
Maximum permissible inflation pressure	the maximum cold inflation pressure to which a tire may be inflated
Measuring rim	the rim on which a tire is fitted for physical dimension requirements
Open splice	any parting at any junction of tread, sidewall, or innerliner that extends to cord material

Tire related term	Meaning
Outer diameter	the overall diameter of an inflated new tire
Overall width	the linear distance between the exteriors of the sidewalls of an inflated tire, including elevations due to labeling, decorations, or protective bands or ribs
Passenger car tire	a tire intended for use on passenger cars, multipurpose passenger vehicles, and trucks, that have a gross vehicle weight rating (GVWR) of 10,000 lb. or less
Ply	a layer of rubber–coated parallel cords
Ply separation	a parting of rubber compound between adjacent plies
Pneumatic tire	a mechanical device made of rubber, chemicals, fabric and steel or other materials, that, when mounted on an automotive wheel, provides the traction and contains the gas or fluid that sustains the load
Radial ply tire	a pneumatic tire in which the ply cords that extend to the beads are laid at substantially 90 degrees to the centerline of the tread
Reinforced tire	a tire designed to operate at higher loads and at higher inflation pressures than the corresponding standard tire
Section width	the linear distance between the exteriors of the sidewalls of an inflated tire, excluding elevations due to labeling, decoration, or protective bands
Sidewall	that portion of a tire between the tread and bead
Sidewall separation	the parting of the rubber compound from the cord material in the sidewall

Tire related term	Meaning
Snow tire	a tire that attains a traction index equal to or greater than 110, compared to the ASTM E–1136 Standard Reference Test Tire, when using the snow traction test as described in ASTM F–1805–00, Standard Test Method for Single Wheel Driving Traction in a Straight Line on Snow–and Ice–Covered Surfaces, and which is marked with an Alpine Symbol ( ) on at lea ne sidewall
Test rim	the rim on which a tire is fitted for testing, and may be any rim listed as appropriate for use with that tire
Tread	that portion of a tire that comes into contact with the road
Tread rib	a tread section running circumferentially around a tire
Tread separation	pulling away of the tread from the tire carcass
Treadwear indicators(TWI)	the projections within the principal grooves designed to give a visual indication of the degrees of wear of the tread
Wheel–holding fixture	the fixture used to hold the wheel and tire assembly securely during testing

Table 1– Occupant loading and distribution for vehicle normal load for various designated seating capacities

Designated seating capacity, number of occupants	Vehicle normal load, number of occupants	Occupant distribution in a normally loaded vehicle
2 through 4	2	2 in front
5 through 10	3	2 in front, 1 in second seat
11 through 15	5	2 in front, 1 in second seat, 1 in third seat, 1 in fourth seat
16 through 20	7	2 in front, 2 in second seat, 2 in third seat, 1 in fourth seat

Vehicle load limits

Vehicle load limits include total load capacity, seating capacity, towing capacity and cargo capacity. Follow the load limits shown below. Total load capacity and seating capacity are also described on the tire and loading information label. For location of the tire and loading information label, see “Checking tire inflation pressure” on page 241.

Total load capacity, kg (lb.):
392 (865)

Total load capacity means combined weight of occupants, cargo and luggage.

Seating capacity:
Total 5 (Front 2, Rear 3)

Seating capacity means the maximum number of occupants whose estimated average weight is 68 kg (150 lb.) per person. Depending on the weight of each person, the seating capacity given may exceed the total load capacity.

NOTICE

Even if the number of occupants are within the seating capacity, do not exceed the total load capacity.

Towing capacity

Scion does not recommend towing a trailer with your vehicle. Your vehicle is not designed for trailer towing.

Cargo capacity

Cargo capacity may increase or decrease depending on the size (weight) and the number of occupants. For details, see “Capacity and distribution” that follows.

⚠ CAUTION

Do not apply the load more than each load limit. That may cause not only damage to the tires, but also deterioration to the steering ability and braking ability, which may cause an accident.

Cargo and luggage—
—Stowage precautions

When stowing cargo and luggage in the vehicle, observe the following:

- Put cargo and luggage in the luggage compartment when at all possible. Be sure all items are secured in place.
- Be careful to keep the vehicle balanced. Locating the weight as far forward as possible helps maintain balance.
- For better fuel economy, do not carry unneeded weight.

⚠ CAUTION

- **When the rear seatbacks are in the upright position—**
  To prevent cargo and luggage from sliding forward during braking, do not stack anything in the luggage compartment higher than the seatbacks. Keep cargo and luggage low, as close to the floor as possible.
- **When the rear seatbacks are folded down—**
  To prevent cargo and luggage from sliding forward during braking, do not stack anything in the enlarged luggage compartment. Keep cargo and luggage low, as close to the floor as possible.

- **Never allow anyone to ride in the luggage compartment. It is not designed for passengers. They should ride in their seats with their seat belts properly fastened. Otherwise, they are much more likely to suffer death or serious bodily injury, in the event of sudden braking or a collision.**
- **Do not place anything on the luggage cover. Such items may be thrown about and possibly injure people in the vehicle during sudden braking or an accident. Secure all items in a safe place.**
- **Do not drive with objects left on top of the instrument panel. They may interfere with the driver's field of view. Or they may move during sudden vehicle acceleration or turning, and impair the driver's control of the vehicle. In an accident they may injure the vehicle occupants.**

NOTICE

Do not load the vehicle beyond the vehicle capacity weight given on page 262.

—Capacity and distribution

Cargo capacity depends on the total weight of the occupants.

(Cargo capacity) = (Total load capacity) – (Total weight of occupants)

Steps for Determining Correct Load Limit—

(1) Locate the statement "The combined weight of occupants and cargo should never exceed XXX kg or XXX lbs." on your vehicle's placard.

(2) Determine the combined weight of the driver and passengers that will be riding in your vehicle.

(3) Subtract the combined weight of the driver and passengers from XXX kg or XXX lbs.

(4) The resulting figure equals the available amount of cargo and luggage load capacity. For example, if the "XXX" amount equals 1400 lbs. and there will be five 150 lb passengers in your vehicle, the amount of available cargo and luggage load capacity is 650 lbs. (1400 – 750 (5x150)=650 lbs.)

(5) Determine the combined weight of luggage and cargo being loaded on the vehicle. That weight may not safely exceed the available cargo and luggage load capacity calculated in Step 4.

(6) If your vehicle will be towing a trailer, load from your trailer will be transferred to your vehicle. Consult this manual to determine how this reduces the available cargo and luggage load capacity of your vehicle.

Scion does not recommend towing a trailer with your vehicle. It is not designed for trailer towing.

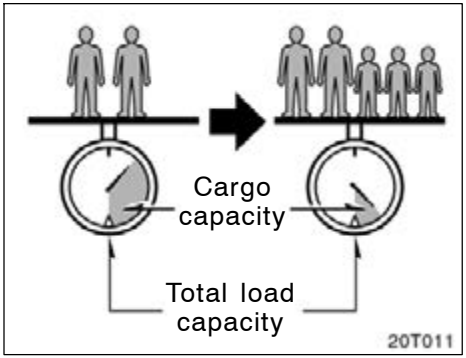

Example on Your Vehicle

In case that 2 people with the combined weight of 166 kg (366 lb.) are riding in your vehicle with the total load capacity of 392 kg (865 lb.), the available amount of cargo and luggage load capacity will be as follows:

392 kg – 166 kg = 226 kg.
(865 lb. – 366 lb. = 499 lb.)

From this condition, if 3 more passengers with the combined weight of 176 kg (388 lb.) get on, the available cargo and luggage load will be reduced as follows:

226 kg – 176 kg = 50 kg.
(499 lb. – 388 lb. = 111 lb.)

As shown in the above example, if the number of occupants increases, the cargo and luggage load equaling the combined weight of occupants who got on later must be reduced. In other words, if the increase in the number of occupants causes the excess of the total load capacity (combined weight of occupants plus cargo and luggage load), you have to reduce the cargo and luggage on your vehicle.

For details about total load capacity, see “Vehicle load limits” on page 178.

⚠ CAUTION

Even if the total load of occupant’s weight and the cargo load is less than the total load capacity, do not apply the load unevenly. That may cause not only damage to the tires but also deterioration to the steering ability due to unbalance of the vehicle, causing an accident.

Types of tires

Determine what kind of tires your vehicle is originally equipped with.

1. Summer tires

Summer tires are high–speed capability tires best suited to highway driving under dry conditions.

Since summer tires do not have the same traction performance as snow tires, summer tires are inadequate for driving on snow–covered or icy roads. For driving on snow–covered or icy roads, we recommend using snow tires. If installing snow tires, be sure to replace all four tires.

2. All season tires

All season tires are designed to provide better traction in snow and to be adequate for driving in most winter conditions, as well as for use all year round.

All season tires, however, do not have adequate traction performance compared with snow tires in heavy or loose snow. Also, all season tires fall short in acceleration and handling performance compared with summer tires in highway driving.

The details about how to distinguish summer tires from all season tires are described on page 164.

⚠ CAUTION

- **Do not mix summer and all season tires on your vehicle as this can cause dangerous handling characteristics, resulting in loss of control.**
- **Do not use tires other than the manufacturer's designated tires, and do not mix tires or wheels of the sizes different from the originally equipped tires and wheels.**

SECTION 3

STARTING AND DRIVING

Starting and driving

Before starting the engine 184
How to start the engine 184
Tips for driving in various conditions 185
Driving in the rain 186
Winter driving tips 187
Dinghy towing 188
Trailer towing 190
How to save fuel and make your vehicle last longer 190

Before starting the engine

1. Check the area around the vehicle before entering it.
2. Adjust seat position, seatback angle, seat cushion angle, head restraint height and steering wheel angle.
3. Adjust inside and outside rear view mirrors.
4. Lock all side doors and back door.
5. Fasten seat belts.

How to start the engine— (a) Before cranking

1. Apply the parking brake firmly.
2. Turn off unnecessary lights and accessories.
3. **Manual transmission:** Press the clutch pedal to the floor and shift the transmission into neutral. Hold the clutch pedal to the floor until the engine is started. A starter safety device will prevent the starter from operating if the clutch pedal is not fully depressed.

   Automatic transmission: Put the shift lever in “P”. If you need to restart the engine while the vehicle is moving, put the shift lever in “N”. A starter safety device will prevent the starter from operating if the shift lever is in any drive position.
4. **Automatic transmission only:** Depress the brake pedal and hold it to the floor until driving off.

(b) Starting the engine

Before starting the engine, be sure to follow the instructions in “(a) Before cranking”.

Normal starting procedure

The multiport fuel injection system/sequential multiport fuel injection system in your engine automatically controls the proper air–fuel mixture for starting. You can start a cold or hot engine as follows:

With your foot off the accelerator pedal, crank the engine by turning the key to “START”. Release it when the engine starts.

Engine should be warmed up by driving, not in idle. For warming up drive with smoothly turning engine until engine coolant temperature is within normal range.

If the engine stalls...

Simply restart it, using the correct procedure given in normal starting.

If the engine will not start...

See “If your vehicle will not start” on page 194.

NOTICE

- ***Do not crank for more than 30 seconds at a time. This may overheat the starter and wiring systems.***
- ***Do not race a cold engine.***
- ***If the engine becomes difficult to start or stalls frequently, have the engine checked immediately.***

Tips for driving in various conditions

- Always slow down in gusty crosswinds. This will allow you much better control.
- Drive slowly onto curbs and, if possible, at a right angle. Avoid driving onto high, sharp–edged objects and other road hazards. Failure to do so can lead to severe tire damage such as a tire burst.
  Drive slowly when passing over bumps or travelling on a bumpy road. Otherwise, the impact could cause severe damage to the tires and/or wheels.
- When parking on a hill, turn the front wheels until they touch the curb so that the vehicle will not roll. Apply the parking brake, and place the transmission in “P” (automatic) or in first or reverse (manual). If necessary, block the wheels.
- Washing your vehicle or driving through deep water may get the brakes wet. To see whether they are wet, check that there is no traffic near you, and then press the pedal lightly. If you do not feel a normal braking force, the brakes are probably wet. To dry them, drive the vehicle cautiously while lightly pressing the brake pedal with the parking brake applied. If they still do not work safely, pull to the side of the road and call a Scion dealer for assistance.

⚠ CAUTION

- **Before driving off, make sure the parking brake is fully released and the parking brake reminder light is off.**
- **Do not leave your vehicle unattended while the engine is running.**
- **Do not rest your foot on the brake pedal while driving. It can cause dangerous overheating, needless wear, and poor fuel economy.**
- **To drive down a long or steep hill, reduce your speed and downshift. Remember, if you ride the brakes excessively, they may overheat and not work properly.**
- **Be careful when accelerating, upshifting, downshifting or braking on a slippery surface. Sudden acceleration or engine braking could cause the vehicle to skid or spin.**

- **Do not drive in excess of the speed limit. Even if the legal speed limit permits it, do not drive over 140 km/h (85 mph) unless your vehicle has high–speed capability tires. Driving over 140 km/h (85 mph) may result in tire failure, loss of control and possible injury. Be sure to consult a tire dealer to determine whether the tires on your vehicle are high–speed capability tires or not before driving at such speeds.**
- **Do not continue normal driving when the brakes are wet. If they are wet, your vehicle will require a longer stopping distance, and it may pull to one side when the brakes are applied. Also, the parking brake will not hold the vehicle securely.**

Driving in the rain

Driving on a slippery road surface

Drive carefully when it is raining, because visibility will be reduced, the windows may become fogged–up, and the road will be slippery.

- Drive carefully when it starts to rain, because the road surface will be especially slippery.
- Refrain from high speeds when driving on an expressway in the rain, because there may be a layer of water between the tires and the road surface, preventing the steering and brakes from operating properly.

⚠ CAUTION

- **Sudden braking, acceleration and steering when driving on a slippery road surface may cause tire slippage and reduce your ability to control the vehicle, resulting in an accident.**
- **Sudden changes in engine speed, such as sudden engine braking, may cause the vehicle to skid, resulting in an accident.**
- **After driving through a puddle, lightly depress the brake pedal to make sure that the brakes are functioning properly. Wet brake pads may prevent the brakes from functioning properly. If the brakes on only one side are wet and not functioning properly, steering control may be affected, resulting in an accident.**

When encountering flooded roads

Do not drive on a road that has flooded after heavy rain etc. Doing so may cause serious damage to the vehicle.

NOTICE

Driving on a flooded road may cause the engine to stall as well as cause serious vehicle malfunctions such as shorts in electrical components and engine damage from water immersion. In the event that you drive on a flooded road and the vehicle is flooded, be sure to have your Scion dealer check brake function, changes in quantity and quality of engine oil, transaxle fluid, etc. and lubricant condition for the bearings and suspension joints (where possible) and the function of all joints and bearings.

Winter driving tips

Make sure you have a proper freeze protection for engine coolant.

Only use “Toyota Super Long Life Coolant” or similar high quality ethylene glycol based non–silicate, non–amine, non–nitrite, and non–borate coolant with long–life hybrid organic acid technology. (Coolant with long–life hybrid organic acid technology is a combination of low phosphates and organic acids.)

See “Checking the engine coolant level” on page 238 for details of coolant type selection.

“Toyota Super Long Life Coolant” is a mixture of 50% coolant and 50% deionized water. This coolant provides protection down to about –35°C (–31°F).

NOTICE

Do not use plain water alone.

Check the condition of the battery and cables.

Cold temperatures reduce the capacity of any battery, so it must be in top shape to provide enough power for winter starting. Section 7–3 tells you how to visually inspect the battery. Your Scion dealer and most service stations will be pleased to check the level of charge.

Make sure the engine oil viscosity is suitable for the cold weather.

See page 237 for recommended viscosity. Leaving a heavy summer oil in your vehicle during winter months may cause harder starting. If you are not sure about which oil to use, call your Scion dealer—they will be pleased to help.

Keep the door locks from freezing.

Squirt lock de–icer or glycerine into the locks to keep them from freezing. To open a frozen lock, try heating the key before inserting it.

Use a washer fluid containing an anti-freeze solution.

This product is available at your Scion dealer and most auto parts stores. Follow the manufacturer's directions for how much to mix with water.

NOTICE
Do not use engine antifreeze or any other substitute because it may damage your vehicle's paint.

Do not use your parking brake when there is a possibility it could freeze.

When parking, put the transmission into "P" (automatic) or into first or reverse (manual) and block the rear wheels. Do not use the parking brake, or snow or water accumulated in and around the parking brake mechanism may freeze, making it hard to release.

Keep ice and snow from accumulating under the fenders.

Ice and snow built up under your fenders can make steering difficult. During bad winter driving, stop and check under the fenders occasionally.

Depending on where you are driving, we recommend you carry some emergency equipment.

Some of the things you might put in the vehicle are tire chains, window scraper, bag of sand or salt, flares, small shovel, jumper cables, etc.

Dinghy towing (with automatic transmission)

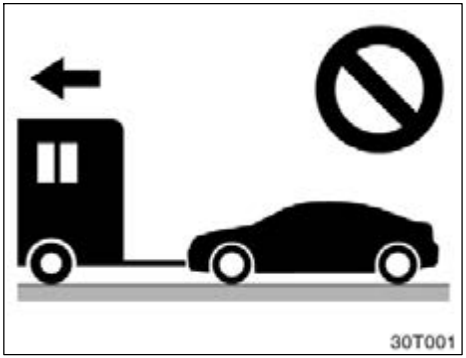

Your vehicle is not designed to be dinghy towed (with four wheels on the ground) behind a motorhome.

NOTICE
Do not tow your vehicle with four wheels on the ground. This may cause serious damage to your vehicle.

Dinghy towing
(with manual transmission)

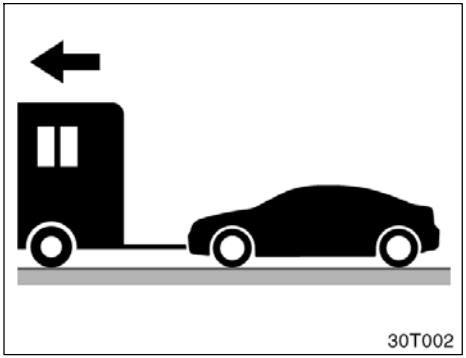

Your vehicle can be dinghy towed (with four wheels on the ground) from the front behind a motorhome.

⚠ CAUTION

Dinghy towing requires special equipment and accessories. Please refer to your service outlet of the motorhome manufacturer for the recommended equipment.

NOTICE

Dinghy towing does not eliminate the possibility of damage to your vehicle.

DINGHY TOWING TIPS

Before dinghy towing, be sure to observe the following in order to reduce the damage to your vehicle.

1. Put the shift lever in neutral.
2. Turn the engine switch to the “ACC” position.

NOTICE

To avoid the locking of the steering wheel, turn the engine switch to the “ACC” position.

3. Release the parking brake.

After dinghy towing, let the engine idle for more than 3 minutes before driving the vehicle.

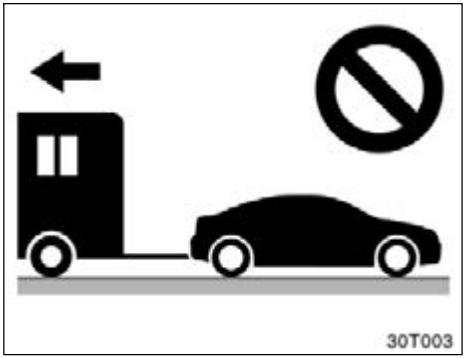

NOTICE

Do not tow your vehicle from the rear. This may cause serious damage to your vehicle.

Trailer towing

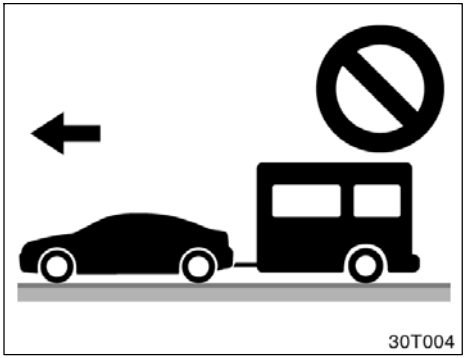

Scion does not recommend towing a trailer with your vehicle. Scion also does not recommend the installation of a tow hitch or the use of a tow hitch carrier for a wheelchair, scooter, bicycle, etc. Your Scion is not designed for trailer towing or for the use of tow hitch mounted carriers.

How to save fuel and make your vehicle last longer

Improving fuel economy is easy–just take it easy. It will help make your vehicle last longer, too. Here are some specific tips on how to save money on both fuel and repairs:

- **Keep your tires inflated at the correct pressure.** Underinflation causes tire wear and wastes fuel. See page 241 for instructions.
- **Do not carry unneeded weight in your vehicle.** Excess weight puts a heavier load on the engine, causing greater fuel consumption.
- **Avoid lengthy warm–up idling.** Once the engine is running smoothly, begin driving—but gently. Remember, however, that on cold winter days this may take a little longer.
- **Keep the automatic transmission shift lever into "D" when engine braking is not required.** Driving with the shift lever in "3" will reduce the fuel economy. (For details, see "Automatic transmission" on page 117.)
- **Accelerate slowly and smoothly.** Avoid jackrabbit starts. Get into high gear as quickly as possible.
- **Avoid long engine idling.** If you have a long wait and you are not in traffic, it is better to turn off the engine and start again later.
- **Avoid engine lugging or over–revving.** Use a gear position suitable for the road on which you are travelling.
- **Avoid continuous speeding up and slowing down.** Stop–and–go driving wastes fuel.
- **Avoid unnecessary stopping and braking.** Maintain a steady pace. Try to time the traffic signals so you only need to stop as little as possible or take advantage of through streets to avoid traffic lights. Keep a proper distance from other vehicles to avoid sudden braking. This will also reduce wear on your brakes.
- **Avoid heavy traffic or traffic jams whenever possible.**
- **Do not rest your foot on the clutch or brake pedal.** This causes needless wear, overheating and poor fuel economy.
- **Maintain a moderate speed on highways.** The faster you drive, the greater the fuel consumption. By reducing your speed, you will cut down on fuel consumption.

- **Keep the front wheels in proper alignment.** Avoid hitting the curb and slow down on rough roads. Improper alignment not only causes faster tire wear but also puts an extra load on the engine, which, in turn, wastes fuel.
- **Keep the bottom of your vehicle free from mud, etc.** This not only lessens weight but also helps prevent corrosion.
- **Keep your vehicle tuned–up and in top shape.** A dirty air cleaner, improper valve clearance, dirty plugs, dirty oil and grease, brakes not adjusted, etc. all lower engine performance and contribute to poor fuel economy. For longer life of all parts and lower operating costs, keep all maintenance work on schedule, and if you often drive under severe conditions, see that your vehicle receives more frequent maintenance. (For scheduled maintenance information, please refer to the "Scheduled Maintenance Guide" or "Owner's Manual Supplement".)

⚠ CAUTION

Never turn off the engine to coast down hills. Your power steering and brake booster will not function without the engine running. Also, the emission control system operates properly only when the engine is running.

SECTION 4

IN CASE OF AN EMERGENCY

In case of an emergency

If your vehicle will not start 194
If your engine stalls while driving 197
If your vehicle overheats 197
If you have a flat tire 198
If your vehicle becomes stuck 209
If your vehicle needs to be towed 209
If you cannot shift automatic transmission shift lever 213
If you lose your keys 214
If you cannot operate back door opener 214

If your vehicle will not start—
(a) Simple checks

Before making these checks, make sure you have followed the correct starting procedure given in “How to start the engine” on page 184 and that you have sufficient fuel.

If the engine is not turning over or is turning over too slowly—

1. Check that the battery terminals are tight and clean.
2. If the battery terminals are O.K., switch on the interior light.
3. If the light is out, dim or goes out when the starter is cranked, the battery is discharged. You may try jump starting. See “(c) Jump starting” for further instructions.

If the light is O.K., but the engine still will not start, it needs adjustment or repair. Call a Scion dealer or qualified repair shop.

NOTICE

For vehicles with manual transmission:
Do not pull– or push–start the vehicle. It may damage the vehicle or cause a collision when the engine starts. Also the three–way catalytic converter may overheat and become a fire hazard.

If the engine turns over at its normal speed but will not start—

1. The engine may be flooded because of repeated cranking. See “(b) Starting a flooded engine” for further instructions.
2. If the engine still will not start, it needs adjustment or repair. Call a Scion dealer or qualified repair shop.

(b) Starting a flooded engine

If the engine will not start, your engine may be flooded because of repeated cranking.

If this happens, turn the key to “START” with the accelerator pedal held down. Keep the key and accelerator pedal in these positions for 15 seconds and release them. Then try starting the engine with your foot off the accelerator pedal.

If the engine does not start after 15 seconds of cranking, release the key, wait a few minutes and try again.

If the engine still will not start, it needs adjustment or repair. Call a Scion dealer or qualified repair shop for assistance.

NOTICE

Do not crank for more than 30 seconds at a time. This may overheat the starter and wiring systems.

(c) Jump starting

To avoid serious injury and damage to your vehicle which might result from battery explosion, acid burns, electrical burns, or damaged electronic components, these instructions must be followed precisely.

For vehicles with automatic transmission: The engine cannot be started by push starting.

If you are unsure about how to follow this procedure, we strongly recommend that you seek the help of a competent mechanic or towing service.

⚠ CAUTION

- **Batteries contain sulfuric acid which is poisonous and corrosive. Wear protective safety glasses when jump starting, and avoid spilling acid on your skin, clothing, or vehicle.**
- **If you should accidentally get acid on yourself or in your eyes, remove any contaminated clothing and flush the affected area with water immediately. Then get immediate medical attention. If possible, continue to apply water with a sponge or cloth while en route to the medical office.**
- **The gas normally produced by a battery will explode if a flame or spark is brought near. Use only standardized jumper cables and do not smoke or light a match while jump starting.**

NOTICE

The battery used for boosting must be 12 V. Do not jump start unless you are sure that the booster battery is correct.

JUMP STARTING PROCEDURE

1. If the booster battery is installed in another vehicle, make sure the vehicles are not touching. Turn off all unnecessary lights and accessories.

   When boosting, use the battery of matching or higher quality. Any other battery may be difficult to jump start with.

   If jump starting is difficult, charge the battery for several minutes.

2. If the engine in the vehicle with the booster battery is not running, start it and let it run for a few minutes. During jump starting, run the engine at about 2000 rpm with the accelerator pedal lightly depressed.

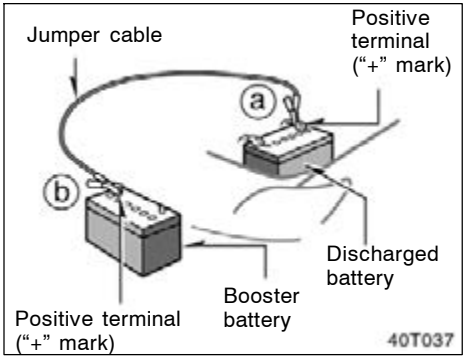

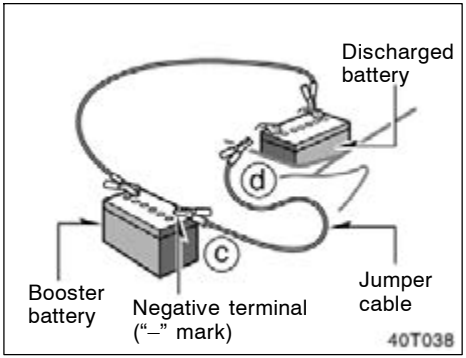

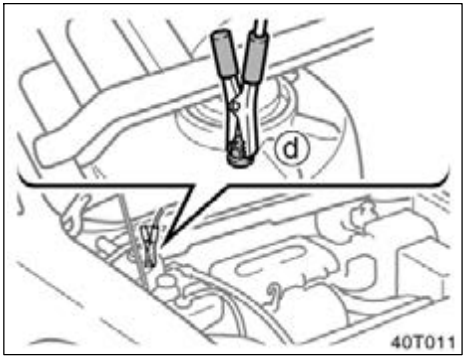

Connecting point

3. Make the cable connections in the order a, b, c, d.
   a. Connect the clamp of the positive (red) jumper cable to the positive (+) terminal on the discharged battery.
   b. Connect the clamp at the other end of the positive (red) jumper cable to the positive (+) terminal on the booster battery.
   c. Connect the clamp of the negative (black) jumper cable to the negative (–) terminal on the booster battery.
   d. Connect the clamp at the other end of the negative (black) jumper cable to a solid, stationary, unpainted, metallic point of the vehicle with the discharged battery.

The recommended connecting point is shown in the following illustration:

Do not connect the cable to or near any part that moves when the engine is cranked.

⚠ CAUTION

When making the connections, to avoid death or serious injury, do not lean over the battery or accidentally let the jumper cables or clamps touch anything except the correct battery terminals or the ground.

4. Start your engine in the normal way. After starting, run it at about 2000 rpm for several minutes with the accelerator pedal lightly depressed.
5. Carefully disconnect the cables in the exact reverse order: the negative cable and then the positive cable.

If the cause of your battery discharging is not apparent (for example, lights left on), you should have it checked at your Scion dealer.

If the first start attempt is not successful...

Check that the clamp on the jumper cables are tight. Recharge the discharged battery with the jumper cables connected for several minutes and restart your engine in the normal way.

If another attempt is not successful, the battery may be depleted. Have it checked at your Scion dealer.

If your engine stalls while driving

If your engine stalls while driving...

1. Reduce your speed gradually, keeping a straight line. Move cautiously off the road to a safe place.
2. Turn on your emergency flashers.
3. Try starting the engine again.

If the engine will not start, see “If your vehicle will not start” on page 194.

CAUTION

If the engine is not running, the power assist for the brakes and steering will not work so steering and braking will be much harder than usual.

If your vehicle overheats

If your engine coolant temperature gauge indicates overheating, if you experience a loss of power, or if you hear a loud knocking or pinging noise, the engine has probably overheated. You should follow this procedure...

1. Pull safely off the road, stop the vehicle and turn on your emergency flashers. Put the transmission in “P” (automatic) or neutral (manual) and apply the parking brake. Turn off the air conditioning if it is being used.
2. If coolant or steam is boiling out of the radiator or reservoir, stop the engine. Wait until the steam subsides before opening the hood. If there is no coolant boiling over or steam, leave the engine running and make sure the electric cooling fan is operating. If it is not, turn the ignition off.

CAUTION

To help avoid personal injury, keep the hood closed until there is no steam. Escaping steam or coolant is a sign of very high pressure.

3. Look for obvious coolant leaks from the radiator, hoses, and under the vehicle. However, note that water draining from the air conditioning is normal if it has been used.

⚠ CAUTION

When the engine is running, keep hands and clothing away from the moving fan and engine drive belts.

4. If the coolant is leaking, stop the engine immediately. Call a Scion dealer for assistance.
5. If there are no obvious leaks, check the coolant reservoir. If it is dry, add coolant to the reservoir while the engine is running. Fill it about half full.

⚠ CAUTION

Do not attempt to remove the radiator cap when the engine and radiator are hot. Serious injury could result from scalding hot fluid and steam blown out under pressure.

6. After the engine coolant temperature has cooled to normal, again check the coolant level in the reservoir. If necessary, bring it up to half full again. Serious coolant loss indicates a leak in the system. You should have it checked as soon as possible at your Scion dealer.

If you have a flat tire—

1. Reduce your speed gradually, keeping a straight line. Move cautiously off the road to a safe place well away from the traffic. Avoid stopping on the center divider of a highway. Park on a level spot with firm ground.
2. Stop the engine and turn on your emergency flashers.
3. Firmly set the parking brake and put the transmission in “P” (automatic) or reverse (manual).
4. Have everyone get out of the vehicle on the side away from traffic.
5. Read the following instructions thoroughly.

⚠ CAUTION

When jacking, be sure to observe the following to reduce the possibility of death or serious injury:

- **Follow jacking instructions.**
- **Do not put any part of your body under the vehicle supported by the jack. Otherwise, death or serious injury may occur.**
- **Do not start or run the engine while your vehicle is supported by the jack.**
- **Stop the vehicle on a level firm ground, firmly set the parking brake and put the transmission in "P" (automatic) or reverse (manual). Block the wheel diagonally opposite to the one being changed if necessary.**
- **Make sure to set the jack properly in the jack point. Raising the vehicle with jack improperly positioned will damage the vehicle or may allow the vehicle to fall off the jack and cause death or serious injury.**
- **Never get under the vehicle when the vehicle is supported by the jack alone.**
- **Use the jack only for lifting your vehicle during wheel changing.**
- **Do not raise the vehicle with someone in the vehicle.**
- **When raising the vehicle, do not place any objects on top of or underneath the jack.**
- **Raise the vehicle only high enough to remove and change the tire.**

NOTICE

Do not continue driving with a deflated tire. Driving even a short distance can damage a tire and wheel beyond repair.

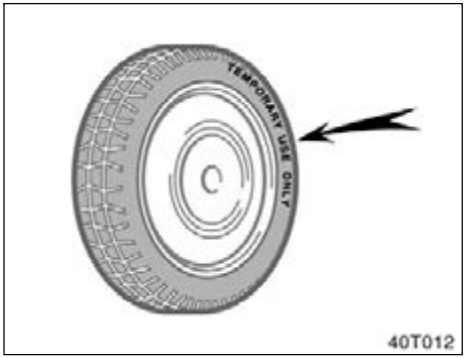

Compact spare tire

The compact spare tire is designed for temporary emergency use only.

The compact spare tire is identified by the distinctive wording "TEMPORARY USE ONLY" molded into the side wall of the tire.

To keep the compact spare tire noticeable, do not hide the wheel by a wheel cover or such.

The compact spare tire saves space in your luggage compartment, and its lighter weight helps to improve fuel economy and permits easier installation in case of a flat tire.

The compact spare tire can be used many times, if necessary. It has tread life of up to 4800 km (3000 miles) depending on road conditions and your driving habits. When treadwear indicators appear on the tire, replace the tire.

See also the tire information on page 243 for details on the treadwear indicators and other service information.

⚠ CAUTION

- **The compact spare tire was designed especially for your Scion. Do not use it on any other vehicle.**
- **Do not use more than one compact spare tire at the same time.**
- **The pressure for the compact spare tire must be 420 kpa (4.2 kgf/cm^2 or bar, 60 psi).**
- **Do not exceed 80 km/h (50 mph) when driving with the compact spare tire.**
- **Replace the compact spare tire with the standard tire as soon as possible.**
- **Avoid sudden acceleration, sudden deceleration and sharp turns with the compact spare tire.**

NOTICE

Your ground clearance is reduced when the compact spare tire is installed so avoid driving over obstacles and drive slowly on rough, unpaved roads and speed bumps. Also, do not attempt to go through an automatic car wash as the vehicle may get caught, resulting in damage.

—Required tools and spare tire

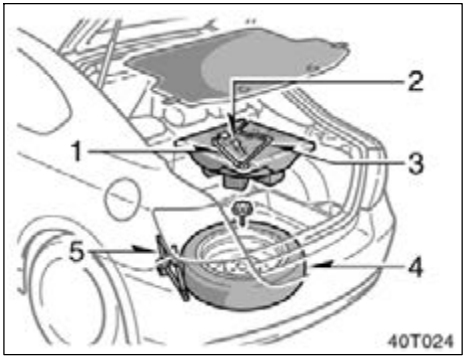

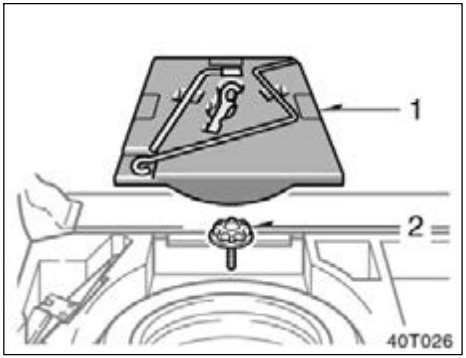

1. **Get the required tools and spare tire.**
   1. Wheel nut wrench
   2. Towing eyelet (For emergency towing)
   3. Jack handle
   4. Spare tire
   5. Jack

To open the luggage storage box, see “Luggage storage box” on page 148.

To prepare yourself for an emergency, you should familiarize yourself with the use of the jack, each of the tools and their storage locations.

To remove the spare tire:

1. Remove the spare tire cover.
2. Loosen the spare tire bolt and remove it.

Then take the spare tire out of the vehicle.

When storing the spare tire, put it in place with the inner side of the wheel facing up. Then secure the tire by repeating the above removal steps in reverse order to prevent it from flying forward during a collision or sudden braking.

The spare tire bolt is designed only for a compact spare tire. Standard size tire cannot be secured with it.

—Blocking the wheel

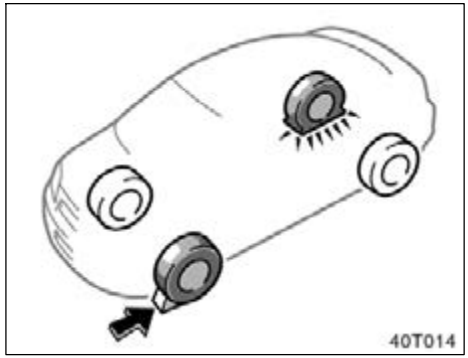

2. Block the wheel diagonally opposite the flat tire to keep the vehicle from rolling when it is jacked up.

When blocking the wheel, place a wheel block in front of one of the front wheels or behind one of the rear wheels.

—Loosening wheel nuts

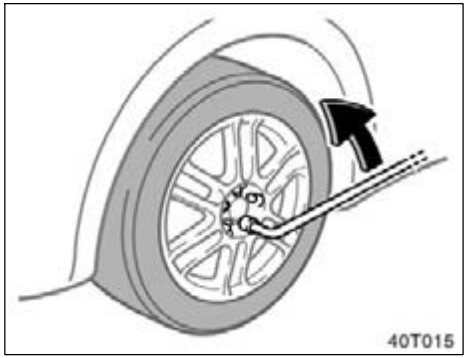

3. Loosen all the wheel nuts.

Always loosen the wheel nuts before raising the vehicle.

Turn the wheel nuts counterclockwise to loosen. To get maximum leverage, fit the wrench to the nut so that the handle is on the right side, as shown above. Grab the wrench near the end of the handle and pull up on the handle. Be careful that the wrench does not slip off the nut.

Do not remove the nuts yet—just unscrew them about one–half turn.

⚠ CAUTION

Never use oil or grease on the bolts or nuts. The nuts may loosen and the wheels may fall off, which could cause serious accident.

—Positioning the jack

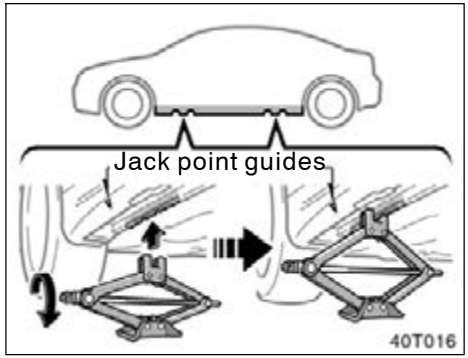

4. The jack point guides are located under the side mud guards. They indicate the jack point positions.

Make sure the jack is positioned on a level and solid place.

—Raising your vehicle

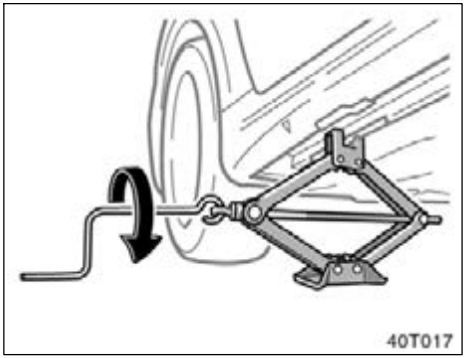

5. After making sure that no one is in the vehicle, raise it high enough so that the spare tire can be installed.

Remember you will need more ground clearance when putting on the spare tire than when removing the flat tire.

To raise the vehicle, insert the jack handle into the jack (it is a loose fit) and turn it clockwise. As the jack touches the vehicle and begins to lift, double–check that it is properly positioned.

⚠ CAUTION

Never get under the vehicle when the vehicle is supported by the jack alone.

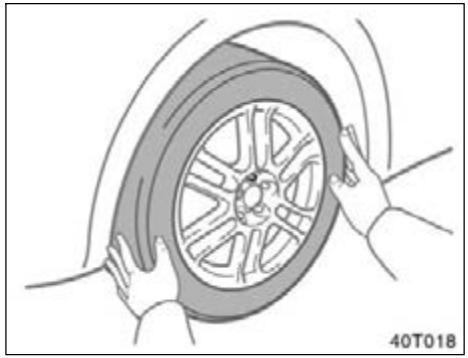

6. Remove the wheel nuts and change tires.

Lift the flat tire straight off and put it aside.

Roll the spare wheel into position and align the holes in the wheel with the bolts. Then lift up the wheel and get at least the top bolt started through its hole. Wiggle the tire and press it back over the other bolts.

Before putting on wheels, remove any corrosion on the mounting surfaces with a wire brush or such. Installation of wheels without good metal–to–metal contact at the mounting surface can cause wheel nuts to loosen and eventually cause a wheel to come off while driving.

—Reinstalling wheel nuts

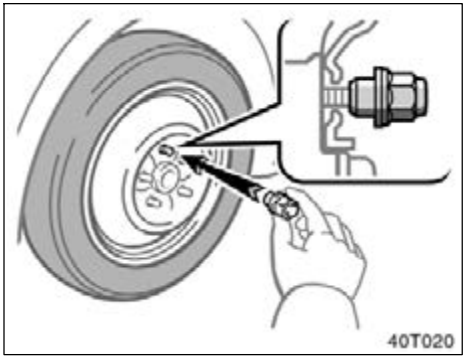

7. Reinstall all the wheel nuts finger tight.

Reinstall the wheel nuts (tapered end inward) and tighten them as much as you can by hand. Press back on the tire and see if you can tighten them more.

⚠ CAUTION

Never use oil or grease on the bolts or nuts. Doing so may lead to overtightening the nuts and damaging the bolts. The nuts may loosen and the wheels may fall off, which could cause serious accident. If there is oil or grease on any bolt or nut, clean it.

—Lowering your vehicle

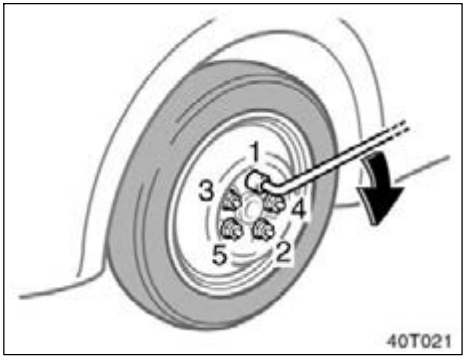

8. Lower the vehicle completely and tighten the wheel nuts.

Turn the jack handle counterclockwise to lower the vehicle.

Use only the wheel nut wrench to tighten the nuts. Do not use other tools or any additional leverage other than your hands, such as a hammer, pipe or your foot. Make sure the wrench is securely engaged over the nut.

Tighten each nut a little at a time in the order shown. Repeat the process until all the nuts are tight.

⚠ CAUTION

- **When lowering the vehicle, make sure all portions of your body and all other persons around will not be injured as the vehicle is lowered to the ground.**
- **Have the wheel nuts tightened with torque wrench to 103 N·m (10.5 kgf·m, 76 ft·lbf), as soon as possible after changing wheels. Otherwise, the nuts may loosen and the wheels may fall off, which could cause a serious accident.**
- **Do not attach a heavily damaged plastic wheel ornament. It may fly off the wheel and cause accidents while the vehicle is moving.**

—Stowing flat tire

9. Restow all the tools and jack securely. Then secure the flat tire in the luggage compartment with the tire tie–down belts and tie–down hooks as follows.

⚠ CAUTION

Before driving, make sure all the tools and jack and flat tire are securely in place in their storage location to reduce the possibility of death or serious injury during sudden braking, sudden swerving or a collision.

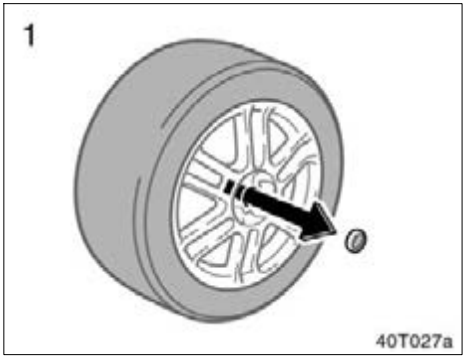

1. Before stowing the flat tire, remove the center wheel ornament by pushing from the reverse side.

Be careful not to lose the wheel ornament.

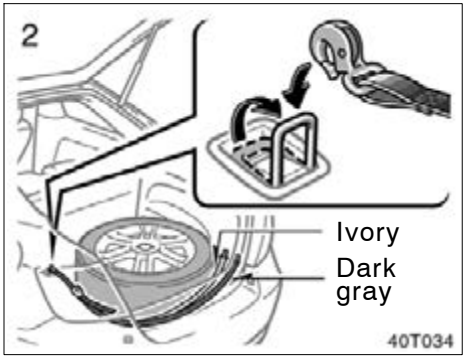

2. Put the flat tire on the center of the luggage storage box lid with the outer side of the wheel facing up. Hook one end of the belt (dark gray portion) which is not forked to either front tie–down hook.

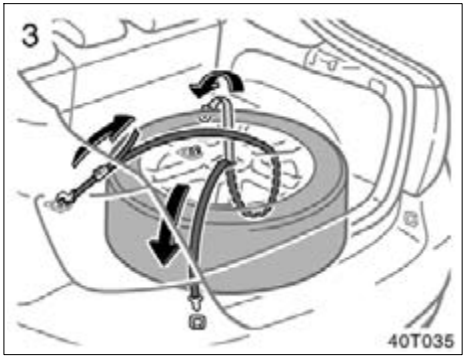

3. Pass the belts from between the wheel spokes through the center hole of the wheel as shown above.

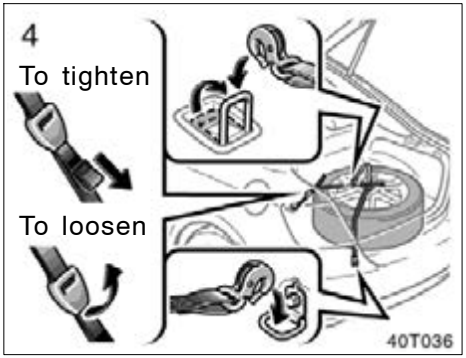

4. Hook another end of the belt (ivory portion) coming through the center hole to the other front tie–down hook, and the other end (dark gray portion) to the rear tie–down hook located diagonally to the secondly used front hook. Finally, make sure the flat tire is stowed securely by tightening the belt firmly using the adjuster.

⚠ CAUTION

- **Make sure the rear seats are in their original position.**
- **When carrying the flat tire, secure it using a tire tie–down belts. Otherwise, the flat tire may fly out in case of the sudden braking or an accident, resulting in death or serious injury.**

—After changing wheels

10. Check the air pressure of the replaced tire.

Adjust the air pressure to the specification designed on page 265. If the pressure is lower, drive slowly to the nearest service station and fill to the correct pressure.

Do not forget to reinstall the tire inflation valve cap as dirt and moisture could get into the valve core and possibly cause air leakage. If the cap is missing, have a new one put on as soon as possible.

As soon after changing wheels as possible, tighten the wheel nuts to the torque specified on page 265 with a torque wrench and have a technician repair the flat tire.

After repairing the flat tire, change it with compact spare tire and reinstall the wheel ornament.

Initial adjustment of the tire pressure warning system is necessary after you have replaced your tires or wheels. See "Tire pressure warning system" on page 121.

⚠ CAUTION

Take due care in handling the ornament to avoid unexpected personal injury.

If your vehicle becomes stuck

If your vehicle becomes stuck in snow, mud, sand, etc., then you may attempt to rock the vehicle free by moving it forward and backward.

⚠ CAUTION

Do not attempt to rock the vehicle free by moving it forward and backward if people or objects are anywhere near the vehicle. During the rocking operation the vehicle may suddenly move forward or backward as it becomes unstuck, causing injury to nearby people or damage to objects.

NOTICE

If you rock your vehicle, observe the following precautions to prevent damage to the transmission and other parts.

- ***Do not depress the accelerator pedal while shifting the shift lever or before the transmission is completely shifted to forward or reverse gear.***
- ***Do not race the engine and avoid spinning the wheels.***
- ***If your vehicle remains stuck after rocking the vehicle several times, consider other ways such as towing.***

If your vehicle needs to be towed—

(a) Towing with wheel lift type truck—

—From front

—From rear

(b) Using flat bed truck

40T022

If towing is necessary, we recommend you to have it done by your Scion dealer or a commercial tow truck service. In consultation with them, have your vehicle towed using either (a) or (b).

Only when you cannot receive a towing service from a Scion dealer or commercial tow truck service, tow your vehicle carefully in accordance with the instructions given in "—Emergency towing" on page 211.

Proper equipment will help ensure that your vehicle is not damaged while being towed. Commercial operators are generally aware of the state/provincial and local laws pertaining to towing.

Your vehicle can be damaged if it is towed incorrectly. Although most operators know the correct procedure, it is possible to make a mistake. To avoid damage to your vehicle, make sure the following precautions are observed. If necessary, show this page to the tow truck driver.

TOWING PRECAUTIONS:

Use a safety chain system for all towing, and abide by the state/provincial and local laws. The wheels and axle on the ground must be in good condition. If they are damaged, use a towing dolly.

(a) Towing with wheel lift type truck

From front—Release the parking brake.

NOTICE
When lifting wheels, take care to ensure adequate ground clearance for towing at the opposite end of the raised vehicle. Otherwise, the bumper and/or underbody of the towed vehicle will be damaged during towing.

From rear—

- Manual transmission:

  We recommend using a towing dolly under the front wheels. If you do not use a towing dolly, place the engine switch in the "ACC" position and put the transmission in neutral.

NOTICE
Do not tow with the key removed or in the "LOCK" position when towing from the rear without a towing dolly. The steering lock mechanism is not strong enough to hold the front wheels straight.

- Automatic transmission:

  Use a towing dolly under the front wheels.

NOTICE
Never tow a vehicle with an automatic transmission from the rear with the front wheels on the ground, as this may cause serious damage to the transmission.

(b) Using flat bed truck

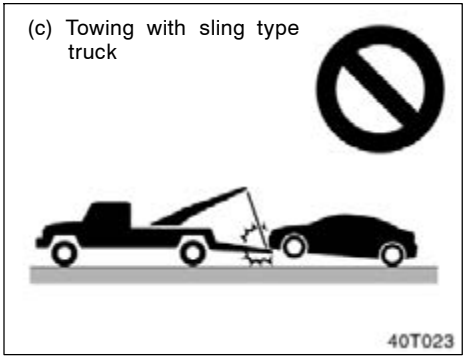

(c) Towing with sling type truck

NOTICE
Do not tow with sling type truck, either from the front or rear. This may cause body damage.

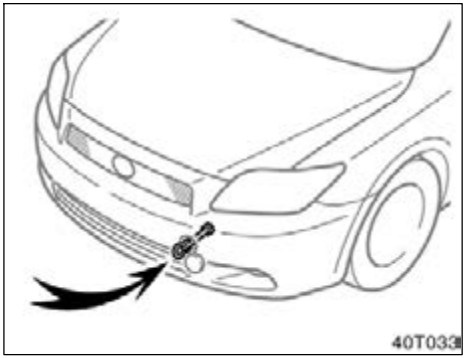

If towing is necessary, we recommend you to have it done by your Scion dealer or a commercial tow truck service.

If towing service is not available in an emergency, your vehicle may be temporarily towed by a cable or chain secured to the emergency towing eyelet. Use extreme caution when towing vehicles.

To install the towing eyelet, see "—Installing towing eyelet" on page 212.

NOTICE
Only use specified towing eyelet; otherwise your vehicle may be damaged.

A driver must be in the vehicle to steer it and operate the brakes.

Towing in this manner may be done only on hard–surfaced roads for a short distance and at low speeds. Also, the wheels, axles, drive train, steering and brakes must all be in good condition.

⚠ CAUTION
Use extreme caution when towing vehicles. Avoid sudden starts or erratic driving maneuvers which would place excessive stress on the emergency towing eyelet and towing cable or chain. The eyelet and towing cable or chain may break and cause serious injury or damage.

NOTICE
Use only a cable or chain specifically intended for use in towing vehicles. Securely fasten the cable or chain to the towing eyelet provided.

Before towing, release the parking brake and put the transmission in neutral (manual) or "N" (automatic). The engine switch must be in "ACC" (engine off) or "ON" (engine running).

⚠ CAUTION

If the engine is not running, the power assist for the brakes and steering will not work so steering and braking will be much harder than usual.

—Installing towing eyelet

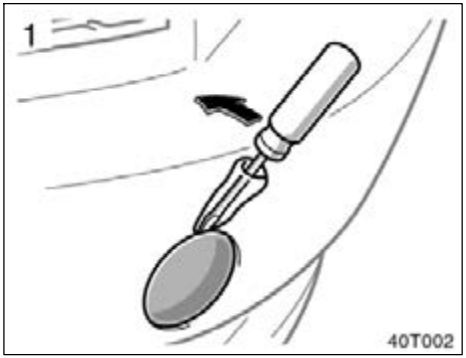

1. Remove the towing eyelet cover on the bumper, using a flathead screwdriver which is wrapped with a cloth.

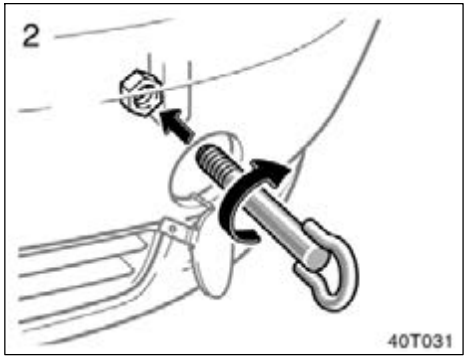

2. Use the towing eyelet in the luggage compartment. Secure it to the hole on the bumper by turning clockwise. (For the eyelet location, see "—Required tools and spare tire" on page 201.)

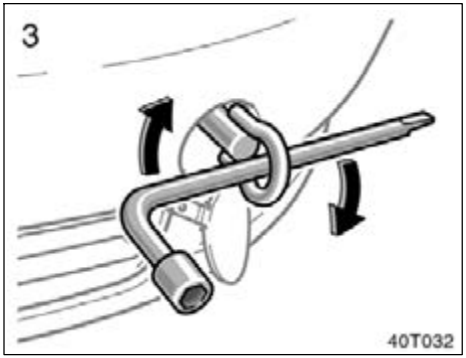

3. Tighten the towing eyelet securely by a wheel nut wrench.

⚠ CAUTION

When installing the eyelet on the vehicle, be sure to tighten the eyelet securely. If the eyelet is loose, it may come off when being towed and result in death or serious injury.

If you cannot shift automatic transmission shift lever

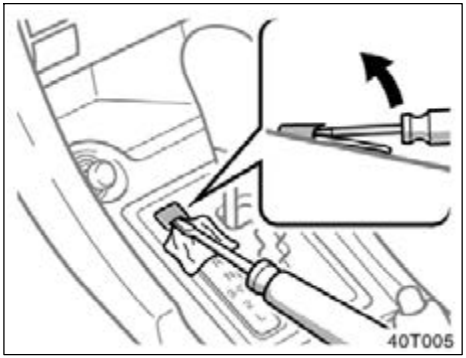

If you cannot move the shift lever out of "P" position to other positions even though the brake pedal is depressed, use the shift lock override button as follows:

1. **Turn the engine switch to "LOCK" position. Make sure the parking brake is applied.**
2. **Pry up the cover with a flathead screwdriver or equivalent.**

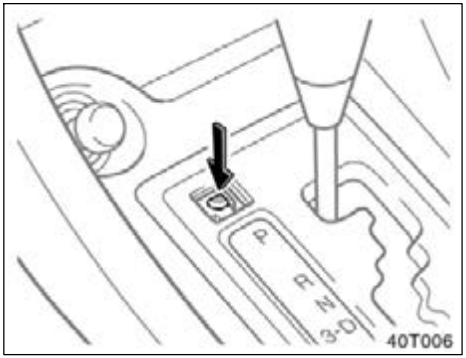

3. **Insert your finger into the hole to push down the shift lock override button. You can move out of "P" position only while pushing the button.**
4. **Shift into "N" position.**
5. **Insert the cover.**
6. **Start the engine. For your safety, keep the brake pedal depressed.**

Be sure to have the system checked by your Scion dealer as soon as possible.

If you lose your keys

You can purchase a new key at your Scion dealer if you can give them the key number and master key.

Even if you lose only one key, contact your Scion dealer to make a new key. If you lose all your master keys, you cannot make new keys; the whole engine immobilizer system must be replaced.

See the suggestion given in “Keys” on page 8.

You can use the wireless remote control system with the new key. Contact your Scion dealer for detailed information.

If your keys are locked in the vehicle and you cannot get a duplicate, many Scion dealers can still open the door for you, using their special tools. If you must break a window to get in, we suggest breaking the smallest side window because it is the least expensive to replace. Be extremely cautious to avoid cuts from the glass.

If you cannot operate back door opener

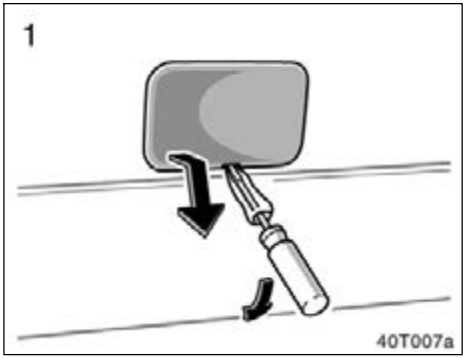

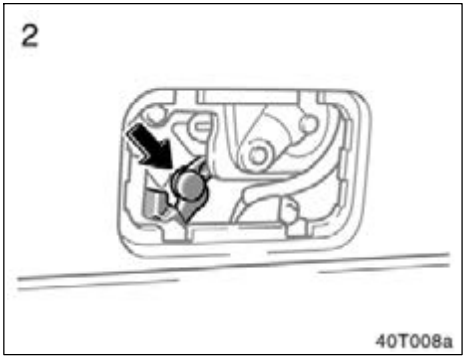

If the back door opener does not operate, you can open the back door from the inside.

To open the back door from inside, perform the following procedure.

1. Remove the cover on the back door trim.
2. Push the lever with the back door motor, open the back door.

Be sure to have the back door opener checked/repaired by your Scion dealer.

SECTION 5

CORROSION PREVENTION AND APPEARANCE CARE

Corrosion prevention and appearance care

Protecting your Scion from corrosion 216
Washing and waxing your Scion 217
Cleaning the interior 219

Protecting your Scion from corrosion

Scion, through its diligent research, design and use of the most advanced technology available, helps prevent corrosion and provides you with the finest quality vehicle construction. Now, it is up to you. Proper care of your Scion can help ensure long–term corrosion prevention.

The most common causes of corrosion to your vehicle are:

- The accumulation of road salt, dirt and moisture in hard–to–reach areas under the vehicle.
- Chipping of paint, or undercoating caused by minor accidents or by stones and gravel.

Care is especially important if you live in particular areas or operate your vehicle under certain environmental conditions:

- Road salt or dust control chemicals will accelerate corrosion, as will the presence of salt in the air near the sea–coast or in areas of industrial pollution.
- High humidity accelerates corrosion especially when temperatures range just above the freezing point.
- Wetness or dampness to certain parts of your vehicle for an extended period of time, may cause corrosion even though other parts of the vehicle may be dry.
- High ambient temperatures can cause corrosion to those components of the vehicle which do not dry quickly due to lack of proper ventilation.

The above signifies the necessity to keep your vehicle, particularly the underside, as clean as possible and to repair any damage to paint or protective coatings as soon as possible.

To help prevent corrosion on your Scion, follow these guidelines:

Wash your vehicle frequently. It is, of course, necessary to keep your vehicle clean by regular washing, but to prevent corrosion, the following points should be observed:

- If you drive on salted roads in the winter or if you live near the ocean, you should hose off the undercarriage at least once a month to minimize corrosion.
- High pressure water or steam is effective for cleaning the vehicle's underside and wheel housings. Pay particular attention to these areas as it is difficult to see all the mud and dirt. It will do more harm than good to simply wet the mud and debris without removing. The lower edge of doors, rocker panels and frame members have drain holes which should not be allowed to clog with dirt as trapped water in these areas can cause corrosion.
- Wash the underside of the vehicle thoroughly when winter is over.

See "Washing and waxing your Scion" for more tips.

Check the condition of your vehicle's paint and trim. If you find any chips or scratches in the paint, touch them up immediately to prevent corrosion from starting. If the chips or scratches have gone through the bare metal, have a qualified body shop make the repair.

Check the interior of your vehicle. Water and dirt can accumulate under the floor mats and could cause corrosion. Occasionally check under the mats to make sure the area is dry. Be particularly careful when transporting chemicals, cleansers, fertilizers, salt, etc.; these should be transported in proper containers. If a spill or leak should occur, immediately clean and dry the area.

Use mud shields on your wheels. If you drive on salted or gravel roads, mud shields help protect your vehicle. Full–size shields, which come as near to the ground as possible, are the best. We recommend that the fittings and the area where the shields are installed be treated to resist corrosion. Your Scion dealer will be happy to assist in supplying and installing the shields if they are recommended for your area.

Keep your vehicle in a well ventilated garage or a roofed place. Do not park your vehicle in a damp, poorly ventilated garage. If you wash your vehicle in the garage, or if you drive it covered with water or snow, your garage may be so damp as to cause corrosion. Even if your garage is heated, a wet vehicle can corrode if the ventilation is poor.

Washing and waxing your Scion

Washing your Scion

Keep your vehicle clean by regular washing.

The following cases may cause weakness to the paint or corrosion to the body and parts. Wash your vehicle as soon as possible.

- When driving in a coastal area
- When driving on a road sprinkled with antifreeze
- When exposed to coal tar, tree sap, bird droppings and carcass of an insect
- When driving in areas where there is a lot of smoke, soot, dust, iron dust or chemical substances
- When the vehicle becomes remarkably dirty with dust and mud

Hand–washing your Scion

Work in the shade and wait until the vehicle body is not warm to the touch.

⚠ CAUTION

- **When cleaning under floor or chassis, be careful not to injure your hands.**

- **Exhaust gasses cause the exhaust pipe to become quite hot. When washing the vehicle, be careful not to touch the pipe until it has cooled sufficiently, as touching a hot exhaust pipe can cause burns.**

1. Rinse off loose dirt with a hose. Remove any mud or road salt from the underside of the vehicle or the wheel wells.
2. Wash with a mild car–wash soap, mixed according to the manufacturer's instructions. Use a soft cotton mitt and keep it wet by dipping it frequently into the wash water. Do not rub hard—let the soap and water remove the dirt.

Fuel filler door: Do not apply water (high–pressure car wash, for example) at or near the fuel tank inlet with the fuel filler door opened. If the water enters the air vent, you may experience trouble with refueling or rough engine idling.

Plastic wheel ornaments: The plastic wheel ornaments are damaged easily by organic substances. If any organic substance splash an ornament, be sure to wash them off with water and check if the ornament is damaged.

Aluminum wheels: Use only a mild soap or neutral detergent.

NOTICE

- ***Do not use corrosive chemical–based cleaners on your wheels. (Example: hydrofluoric acid)***
- ***Do not use steam cleaners or the chemicals therein to clean your wheels.***
- ***Do not use scouring pads, wire brushes, or coarse abrasives to clean your wheels.***
- ***Do not use alcohol, solvents, gasoline, or other non–neutral detergents, because they may alter the wheel's appearance and resistance to corrosion.***

Plastic bumpers: Wash carefully. Do not scrub with abrasive cleaners. The bumper faces are soft.

Exterior lights: Wash carefully. Do not use organic substances or scrub them with a hard brush. This may damage the surfaces of the lights.

Road tar: Remove with turpentine or cleaners that are marked safe for painted surfaces.

3. Rinse thoroughly—dried soap can cause streaking. In hot weather you may need to rinse each section right after you wash it.
4. To prevent water spots, dry the vehicle using a clean soft cotton towel. Do not rub or press hard—you might scratch the paint.

NOTICE

- ***Do not use organic substances (gasoline, kerosene, benzine or strong solvents), which may be toxic or cause damage.***
- ***Do not scrub any part of the vehicle with a hard brush, which may cause damage.***

Automatic car wash

Your vehicle may be washed in an automatic car wash, but remember that the paint can be scratched by some types of brushes, unfiltered washing water, or the washing process itself. Scratching reduces paint durability and gloss, especially on darker colors. The manager of the car wash should be able to advise you whether the process is safe for the paint on your vehicle.

NOTICE

To prevent damage to the antenna, make sure it is removed before driving your Scion through an automatic car wash.

Waxing your Scion

Polishing and waxing is recommended to maintain the original beauty of your Scion's finish.

Apply wax once a month or if the vehicle surface does not repel water well.

1. Always wash and dry the vehicle before you begin waxing, even if you are using a combined cleaner and wax.

2. Use a good quality polish and wax. If the finish has become extremely weathered, use a car–cleaning polish, followed by a separate wax. Carefully follow the manufacturer's instructions and precautions. Be sure to polish and wax the chrome trim as well as the paint.

Windshield washer nozzles: Make sure that the nozzles do not become blocked when waxing. If a nozzle becomes blocked, contact your Scion dealer to have the vehicle serviced.

NOTICE

If a nozzle becomes blocked, do not try to clear it with a pin or other object. The nozzle will be damaged.

Exterior lights: Do not apply wax on the surfaces of the lights. Wax may cause damage to the lenses. If you accidentally put wax on the light surface, wipe or wash it off.

3. Wax the vehicle again when water does not bead but remains on the surface in large patches.

Cleaning the interior

CAUTION

- **Do not splash or spill liquid in the vehicle. Doing so may cause electrical components etc. to malfunction or catch fire.**
- **Be careful not to splash water or spill liquid on the floor. This may prevent the side airbags and curtain shield airbags from activating correctly, resulting in serious injury.**

NOTICE

Do not wash the vehicle floor with water, or allow water to get onto the floor when cleaning the vehicle interior or exterior. Water may get into audio components or other electrical components above or under the vehicle carpet (or floor mat) and cause a malfunction; and it may cause body corrosion.

Vinyl interior

The vinyl upholstery may be easily cleaned with a mild soap or detergent and water.

First vacuum over the upholstery to remove loose dirt. Then, using a sponge or soft cloth, apply the soap solution to the vinyl. After allowing it to soak in for a few minutes to loosen the dirt, remove the dirt and wipe off the soap with a clean damp cloth. If all the dirt do not come off, repeat the procedure. Commercial foaming–type vinyl cleaners are also available which work well. Follow the manufacturer's instructions.

NOTICE

Do not use solvent, thinner, gasoline or window cleaner on the interior.

Carpets

Use a good foam–type shampoo to clean the carpets.

Begin by vacuuming thoroughly to remove as much dirt as possible. Several types of foam cleaners are available; some are in aerosol cans and others are powders or liquids which you mix with water to produce a foam. To shampoo the carpets, use a sponge or brush to apply the foam. Rub in overlapping circles.

Do not apply water—the best results are obtained by keeping the carpet as dry as possible. Read the shampoo instructions and follow them closely.

Seat belts

The seat belts may be cleaned with mild soap and water or with lukewarm water.

Use a cloth or sponge. As you are cleaning, check the belts for excessive wear, fraying, or cuts.

NOTICE

- ***Do not use dye or bleach on the belts—it may weaken them.***
- ***Do not use the belts until they become dry.***

Windows

NOTICE

- ***Do not use glass cleaner to clean the inside of the rear window, as this may cause damage to the rear window defogger heater wires or antenna. Use a cloth dampened with lukewarm water to gently wipe the window clean. Wipe the window in strokes running parallel to the heater wires or antenna.***
- ***When cleaning the inside of the rear window, be careful not to scratch or damage the heater wires or antenna.***

Air conditioning control panel, instrument panel, console panel, and switches

Use a soft damp cloth for cleaning.

Soak a clean soft cloth in water or lukewarm water then lightly wipe off dirt.

NOTICE

- ***Do not use organic substances (solvents, kerosene, alcohol, gasoline, etc.) or alkaline or acidic solutions. These chemicals can cause discoloring, staining or peeling of the surface.***
- ***If you use cleaners or polishing agents, make sure their ingredients do not include the substances mentioned above.***
- ***If you use a liquid car freshener, do not spill the liquid onto the vehicle's interior surfaces. It may contain the ingredients mentioned above. Immediately clean any spill using the method mentioned above.***

If you have any questions about the cleaning of your Scion, your local Scion dealer will be pleased to answer them.

SECTION 6

VEHICLE MAINTENANCE AND CARE

Vehicle maintenance and care

Maintenance requirements 222
General maintenance 223
Does your vehicle need repairing? 225
Emissions inspection and maintenance (I/M) programs 226

For scheduled maintenance information, please refer to the “Scheduled Maintenance Guide” or “Owner’s Manual Supplement”.

Maintenance requirements

Your Scion vehicle has been designed for fewer maintenance requirements with longer service intervals to save both your time and money. However, each regular maintenance, as well as day–to–day care, is more important than ever before to ensure smooth, trouble–free, safe, and economical drivings.

It is the owner's responsibility to make sure the specified maintenance, including general maintenance service, is performed. Note that both the new vehicle and emission control system warranties specify that proper maintenance and care must be performed. See "Owner's Warranty Information Booklet" or "Owner's Manual Supplement" for complete warranty information.

General maintenance

General maintenance items are those day–to–day care practices that are important to your vehicle for proper operation. It is the owner's responsibility to insure that the general maintenance items are performed regularly.

These checks or inspections can be done either by yourself or a qualified technician, or if you prefer, your Scion dealer will be pleased to do them at a nominal cost.

Scheduled maintenance

The scheduled maintenance items listed in the "Scheduled Maintenance Guide" are those required to be serviced at regular intervals.

For details of your maintenance schedule, read the "Scheduled Maintenance Guide" or "Owner's Manual Supplement".

It is recommended that any replacement parts used for maintenance or for the repair of the emission control system be Scion supplied.

The owner may elect to use non–Scion supplied parts for replacement purposes without invalidating the emission control system warranty. However, use of replacement parts which are not of equivalent quality may impair the effectiveness of the emission control systems.

You may also elect to have maintenance, replacement, or repair of the emission control devices and system performed by any automotive repair establishment or individual without invalidating this warranty. See "Owner's Warranty Information Booklet" or "Owner's Manual Supplement" for complete warranty information.

Where to go for service?

Scion technicians are well–trained specialists and are kept up to date with the latest service information through technical bulletins, service tips, and in–dealership training programs. They learn to work on Scions before they work on your vehicle, rather than while they are working on it.

You can be confident that your Scion dealer's service department performs the best job to meet the maintenance requirements on your vehicle—reliably and economically.

Your copy of the repair order is proof that all required maintenance has been performed for warranty coverage. If any problems should arise with your vehicle while under warranty, your Scion dealer will promptly take care of it. Again, be sure to keep a copy of the repair order for any service performed on your Scion.

What about do–it–yourself maintenance?

Many of the maintenance items are easy to do yourself if you have a little mechanical ability and a few basic automotive tools. Simple instructions for how to perform them are presented on page 227.

If you are a skilled do–it–yourself mechanic, the Scion service manuals are recommended. Please be aware that do–it–yourself maintenance can affect your warranty coverage. See “Owner’s Warranty Information Booklet” or “Owner’s Manual Supplement” for details.

General maintenance

Listed below are the general maintenance items that should be performed as frequently as specified. In addition to checking the items listed, if you notice any unusual noise, smell or vibration, you should investigate the cause or take your vehicle to your Scion dealer or a qualified service shop immediately. It is recommended that any problem you notice be brought to the attention of your dealer or the qualified service shop for their advice.

⚠ CAUTION

Make these checks only with adequate ventilation if you run the engine.

IN THE ENGINE COMPARTMENT

Items listed below should be checked from time to time, e.g. each time when refueling.

Washer fluid
Make sure there is sufficient fluid in the tank. See page 255 for additional information.

Engine coolant level
Make sure the coolant level is between the “FULL” and “LOW” lines on the see–through reservoir when the engine is cold. See page 238 for additional information.

Radiator, condenser, and hoses
Check that the front of the radiator and condenser are clean and not blocked with leaves, dirt or insects. See page 239 for additional information.

Battery electrolyte level
Your Scion has a maintenance free battery. You do not have to add distilled water. For longer life of the battery, however, see page 253 for additional information.

Brake fluid level
Make sure the brake fluid level is correct. See page 239 for additional information.

Engine oil level
Check the level on the dipstick with the engine turned off and the vehicle parked on a level spot. See page 236 for additional information.

Power steering fluid level
Check the level through the reservoir. The level should be in the “HOT” or “COLD” range depending on the fluid temperature. See page 240 for additional information.

Exhaust system
If you notice any change in the sound of the exhaust or smell exhaust fumes, have the cause located and corrected immediately. (See “Engine exhaust cautions” on page 156.)

INSIDE THE VEHICLE

Items listed below should be checked regularly, e.g. while performing periodic services, cleaning the vehicle, etc.

Lights
Make sure the headlights, stop lights, tail lights, turn signal lights, and other lights are all working. Check headlight aim.

Service reminder indicators and warning buzzers
Check that all service reminder indicators and warning buzzers function properly.

Steering wheel
Check that it has specified free play. Be alert for changes in steering condition, such as hard steering or strange noise.

Seats
Check that all front seat controls such as seat adjusters, seatback recliner, etc. operate smoothly and that all latches lock securely in any position. Check that the head restraints move up and down smoothly and that the locks hold securely in any latched position. For folding–down rear seatbacks, check that the latches lock securely.

Seat belts
Check that the seat belt system such as buckles, retractors and anchors operate properly and smoothly. Make sure the belt webbing is not cut, frayed, worn or damaged.

Accelerator pedal
Check the pedal for smooth operation and uneven pedal effort or catching.

Clutch pedal
Check the pedal for smooth operation.

Brake pedal
Check the pedal for smooth operation and that the pedal has the proper clearance. Check the brake booster function.

Brakes
In a safe place, check that the brakes do not pull to one side when applied.

Parking brake
Check that the lever has the proper travel and that, on a safe incline, your vehicle is held securely with only the parking brake applied.

Automatic transmission “Park” mechanism
Check the lock release button of the shift lever for proper and smooth operation. On a safe incline, check that your vehicle is held securely with the shift lever in “P” position and all brakes released.

OUTSIDE THE VEHICLE

Items listed below should be performed from time to time, unless otherwise specified.

Fluid leaks
Check underneath for leaking fuel, oil, water or other fluid after the vehicle has been parked for a while. If you smell fuel fumes or notice any leak, have the cause found and corrected immediately.

Doors and engine hood
Check that all the side doors and back door operate smoothly and all latches lock securely. Make sure the engine hood secondary latch secures the hood from opening when the primary latch is released.

Tire inflation pressure

Check the pressure with a gauge every two weeks, or at least once a month. See page 241 for additional information.

Tire surface and wheel nuts

Check the tires carefully for cuts, damage or excessive wear. See page 243 for additional information. When checking the tires, make sure no nuts are missing, and check the nuts for looseness. Tighten them if necessary.

Tire rotation

Rotate the tires according to the maintenance schedule. (For scheduled maintenance information, please refer to the “Scheduled Maintenance Guide” or “Owner’s Manual Supplement”.) See page 246 for additional information.

Does your vehicle need repairing?

Be on the alert for changes in performance, sounds, and visual tip–offs that indicate service is needed. Some important clues are as follows:

- Engine missing, stumbling, or pinging
- Appreciable loss of power
- Strange engine noises
- A fluid leak under the vehicle (however, water dripping from the air conditioning after use is normal.)
- Change in exhaust sound (This may indicate a dangerous carbon monoxide leak. Drive with the windows open and have the exhaust system checked immediately.)
- Flat–looking tire; excessive tire squeal when cornering; uneven tire wear
- Vehicle pulls to one side when driving straight on a level road
- Strange noises related to suspension movement
- Loss of brake effectiveness; spongy feeling brake or clutch pedal; pedal almost touches floor; vehicle pulls to one side when braking
- Engine coolant temperature continually higher than normal

If you notice any of these clues, take your vehicle to your Scion dealer as soon as possible. It probably needs adjustment or repair.

⚠ CAUTION

Do not continue driving with the vehicle unchecked. It could result in serious vehicle damage and possibly personal injury.

Emissions inspection and maintenance (I/M) programs

Some states have vehicle emission inspection programs which include OBD (On–Board Diagnostics) checks.

The OBD system monitors the operation of the emission control system. When the OBD system determines that a problem exists somewhere in the emission control system, the malfunction indicator lamp comes on. In this case, your vehicle may not pass the I/M test and need to be repaired. Contact your Scion dealer to service the vehicle.

Even if the malfunction indicator lamp does not come on, your vehicle may not pass the I/M test as readiness codes have not been set in the OBD system.

Readiness codes are automatically set during ordinary driving. However, when the battery is disconnected or run down, the codes are erased. Also, depending on your driving habits, the codes may not be completely set.

Also, if the malfunction indicator lamp had come on recently due to temporary malfunction such as a loose fuel tank cap, your vehicle may not pass the I/M test.

The malfunction indicator lamp will go off after taking several driving trips, but the error code in the OBD system will not be cleared unless about 40 trips or more are taken.

If your vehicle does not pass the I/M test even the malfunction indicator lamp does not come on, contact your Scion dealer to prepare the vehicle for re–testing.

SECTION 7–1

DO–IT–YOURSELF MAINTENANCE

Introduction

Engine compartment overview 228
Fuse locations 229
Do–it–yourself service precautions 229
Parts and tools 231
Positioning a floor jack 232

Engine compartment overview

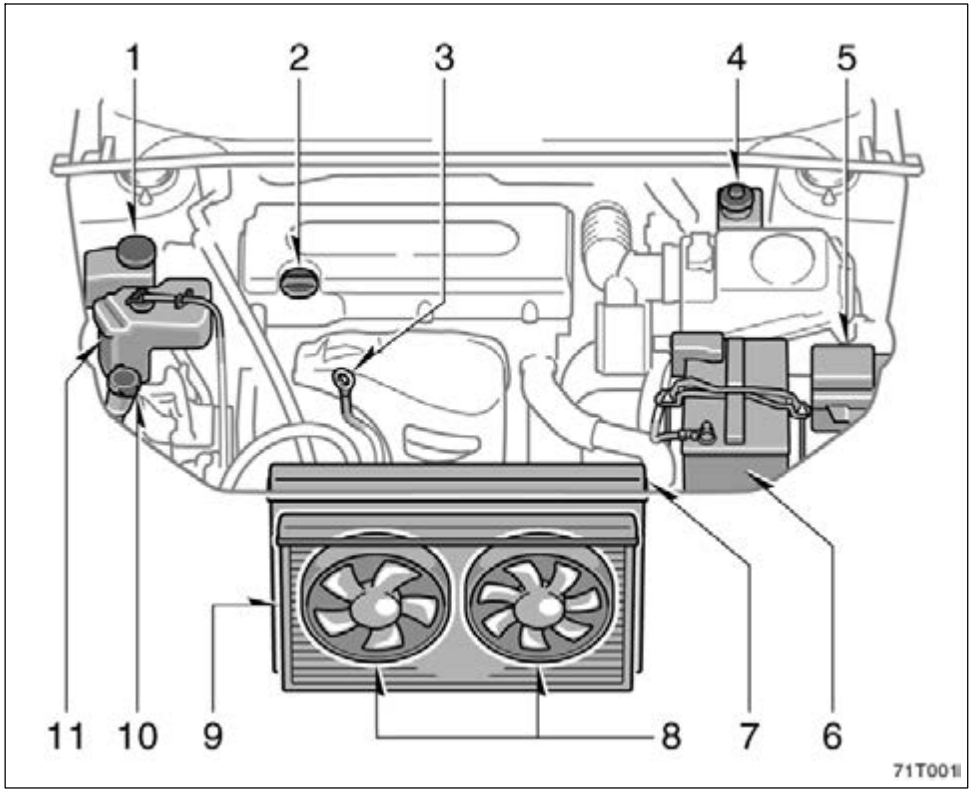

1. Power steering fluid reservoir
2. Engine oil filler cap
3. Engine oil level dipstick
4. Brake fluid reservoir
5. Fuse block
6. Battery
7. Radiator
8. Electric cooling fan
9. Condenser
10. Windshield washer fluid tank
11. Engine coolant reservoir

Fuse locations

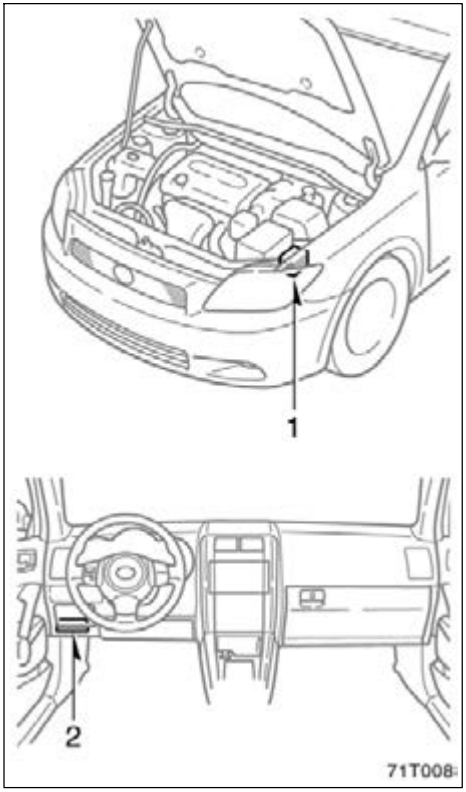

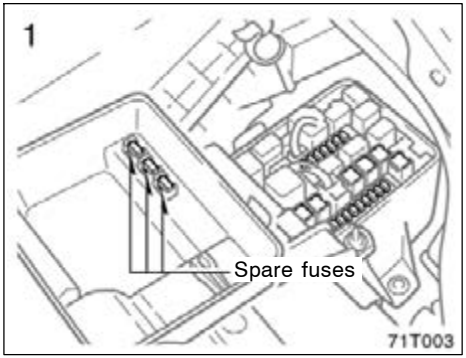

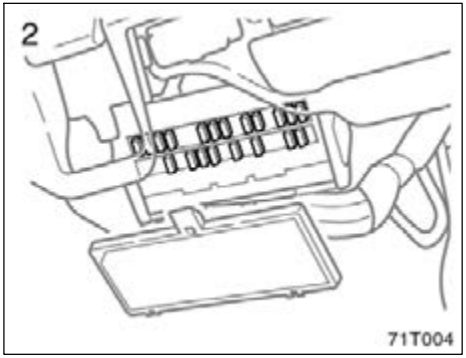

Do–it–yourself service precautions

If you perform maintenance by yourself, be sure to follow the correct procedure given in this section.

You should be aware that improper or incomplete servicing may result in operating problems.

Performing do–it–yourself maintenance during the warranty period may affect your warranty coverage. Read the separate Scion Warranty statement for details and suggestions.

This section gives instructions only for those items that are relatively easy for an owner to perform. As explained in Section 6, there are still a number of items that must be done by a qualified technician with special tools.

For information on tools and parts for do–it–yourself maintenance, see “Parts and tools” on page 231.

Utmost care should be taken when working on your vehicle to prevent accidental injury. Here are a few precautions that you should be especially careful to observe:

⚠ CAUTION

- When the engine is running, keep hands, clothing, and tools away from the moving fan and engine drive belts. (Removing rings, watches, and ties is advisable.)
- Right after driving, the engine compartment—the engine, radiator, exhaust manifold and spark plug boots, etc.—will be hot. So be careful not to touch them. Oil, fluids and spark plugs may also be hot.
- If the engine is hot, do not remove the radiator cap or loosen the drain plugs to prevent burning yourself.
- Do not leave anything that may burn easily, such as paper or rags, in the engine compartment.
- Do not smoke, cause sparks or allow open flames around fuel or the battery. Their fumes are flammable.
- Be extremely cautious when working on the battery. It contains poisonous and corrosive sulfuric acid.
- Do not get under your vehicle with just the body jack supporting it. Always use automotive jack stands or other solid supports.
- Be sure that the ignition is off if you work near the electric cooling fans or radiator grille. With the ignition on, the electric cooling fans will automatically start to run if the engine coolant temperature is high and/or the air conditioning is on.
- Use eye protection whenever you work on or under your vehicle where you may be exposed to flying or falling material, fluid spray, etc.
- Used engine oil contains potentially harmful contaminants which may cause skin disorders such as inflammation or skin cancer, so care should be taken to avoid prolonged and repeated contact with it. To remove used engine oil from your skin, wash thoroughly with soap and water.
- Do not leave used oil within the reach of children.
- Dispose of used oil and filter only in a safe and acceptable manner. Do not dispose of used oil and filter in household trash, in sewers or onto the ground. Call your dealer or a service station for information concerning recycling or disposal.
- Take care when filling the brake and clutch fluid reservoirs because brake fluid can harm your eyes and damage painted surfaces. If fluid gets in your eyes, flush your eyes with clean water immediately. If you still feel uncomfortable with your eyes, go to the doctor.

NOTICE

- ***Remember that battery and ignition cables carry high currents or voltages. Be careful of accidentally causing a short circuit.***
- ***Add only "Toyota Super Long Life Coolant" or similar high quality ethylene glycol based non–silicate, non–amine, non–nitrite, and non–borate coolant with long–life hybrid organic acid technology to fill the radiator. "Toyota Super Long Life Coolant" is a mixture of 50% coolant and 50% deionized water.***
- ***If you spill some of the coolant, be sure to wash it off with water to prevent it from damaging the parts or paint.***
- ***Do not allow dirt or anything else to fall through the spark plug holes.***
- ***Use only spark plugs of the specified type. Using other types will cause engine damage, loss of performance or radio noise.***
- ***Do not overfill automatic transmission fluid and power steering fluid, or the transmission and power steering could be damaged.***
- ***Do not drive with the air cleaner filter removed, or excessive engine wear could result. Also backfiring could cause a fire in the engine compartment.***
- ***Be careful not to scratch the glass surface with the wiper frame.***
- ***When closing the engine hood, check to see that you have not forgotten any tools, rags, etc.***

Parts and tools

Here is a list of parts and tools you will need to perform do–it–yourself maintenance. Remember all Scion parts are designed in metric sizes, so your tools must be metric.

CHECKING THE ENGINE OIL LEVEL

Parts (if level is low):

- "Genuine Motor Oil" or equivalent. See page 237 for details about engine oil selection.

Tools:

- Rag or paper towel
- Funnel (only for adding oil)

CHECKING THE ENGINE COOLANT LEVEL

Parts (if level is low):

- "Toyota Super Long Life Coolant" or similar high quality ethylene glycol based non–silicate, non–amine, non–nitrite, and non–borate coolant with long–life hybrid organic acid technology. (Coolant with long–life hybrid organic acid technology is a combination of low phosphates and organic acids.)

  "Toyota Super Long Life Coolant" is a mixture of 50% coolant and 50% deionized water.

Tools:
- Funnel (only for adding coolant)

CHECKING BRAKE FLUID

Parts (if level is low):
- SAE J1703 or FMVSS No.116 DOT 3 brake fluid

Tools:
- Rag or paper towel
- Funnel (only for adding fluid)

CHECKING POWER STEERING FLUID

Parts (if level is low):
- Automatic transmission fluid DEXRON®II or III

Tools:
- Rag or paper towel
- Funnel (only for adding fluid)

CHECKING BATTERY CONDITION

Tools:
- Warm water
- Baking soda
- Grease
- Conventional wrench (for terminal clamp bolts)

CHECKING AND REPLACING FUSES

Parts (if replacement is necessary):
- Genuine fuse or equivalent with same amperage rating as original

ADDING WASHER FLUID

Parts:
- Water
- Washer fluid containing antifreeze (for winter use)

Tools:
- Funnel (only for adding washer fluid)

REPLACING LIGHT BULBS

Parts:
- Bulb with same number and wattage rating as original (See the table in “Replacing light bulbs” on page 255.)

Positioning a floor jack

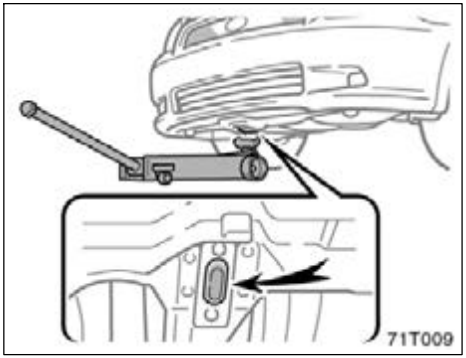

Front

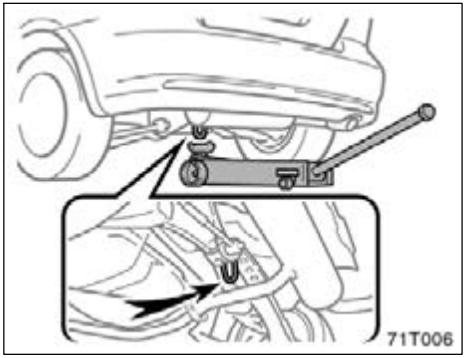

Rear

When jacking up your vehicle with the floor jack, position the jack correctly as shown in the illustration.

⚠ CAUTION

When jacking, be sure to observe the following to reduce the possibility of death or serious injury:

- **Follow jacking instructions.**
- **Do not put any part of your body under the vehicle supported by a floor jack. Personal injury may occur.**
- **Do not start or run the engine while your vehicle is supported by the floor jack.**
- **Stop the vehicle on a level firm ground, firmly set the parking brake and put the transmission in "P" (automatic) or reverse (manual). Block the wheel diagonally opposite to the floor jack being changed if necessary.**
- **Make sure to set the floor jack properly in the jack point. Raising the vehicle with floor jack improperly positioned will damage the vehicle or may allow the vehicle to fall off the floor jack and cause personal injury.**
- **Never get under the vehicle when the vehicle is supported by the floor jack alone; use vehicle support stands.**
- **Do not raise the vehicle with someone in the vehicle.**
- **When raising the vehicle, do not place any objects on top of or underneath the floor jack.**

NOTICE

Make sure to place the floor jack correctly, or your vehicle may be damaged.

SECTION 7–2

DO–IT–YOURSELF MAINTENANCE

Engine and Chassis

Checking the engine oil level 236
Checking the engine coolant level 238
Checking the radiator and condenser 239
Checking brake fluid 239
Checking power steering fluid 240
Checking tire inflation pressure 241
Checking and replacing tires 243
Rotating tires 246
Installing snow tires and chains 246
Replacing wheels 248
Aluminum wheel precautions 249

Checking the engine oil level

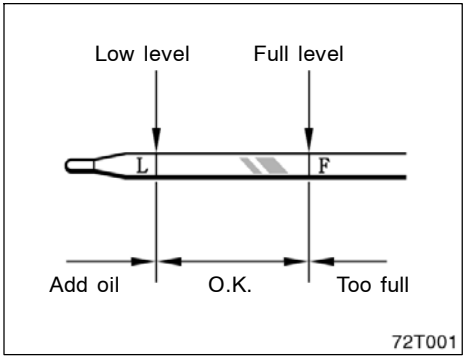

With the engine at operating temperature and turned off, check the oil level on the dipstick.

1. To get a correct reading, the vehicle should be on level ground. After turning off the engine, wait more than five minutes for the oil to drain back into the bottom of the engine.
2. Pull the dipstick out, hold a rag under the end and wipe it clean.
3. Reinsert the dipstick—Push it in as far as it will go, or the reading will not be correct.
4. Pull the dipstick out and look at the oil level while holding a rag under the end.

⚠ CAUTION

Be careful not to touch the hot exhaust manifold.

NOTICE

Be careful not to drop engine oil on the vehicle components.

If the oil level is below or only slightly above the low level, add engine oil of the same type as already in the engine.

Remove the oil filler cap and add engine oil in small quantities at a time, checking the dipstick. We recommend that you use a funnel when adding oil.

The approximate quantity of oil needed to raise the level between low and full on the dipstick is indicated as follows:

1.0 L (1.1 qt., 0.9 Imp.qt.)

When the level reaches within the correct range, install the filler cap hand–tight.

For the engine oil capacity, see “Service specifications” on page 263.

NOTICE

- ***Be careful not to spill engine oil on the vehicle components.***
- ***Avoid overfilling, or the engine could be damaged.***
- ***Check the oil level on the dipstick once again after adding the oil.***

ENGINE OIL SELECTION

“Toyota Genuine Motor Oil” is used in your Scion vehicle. Use Scion approved “Toyota Genuine Motor Oil” or equivalent to satisfy the following grade and viscosity.

Oil grade:

ILSAC multigrade engine oil.

Recommended viscosity:

SAE 5W–20 or 0W–20

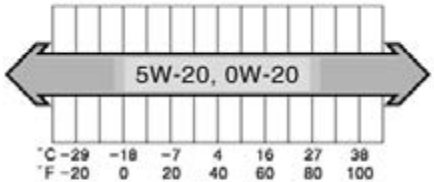

OIL016

SAE 5W–20 or 0W–20 engine oil may be used. However, SAE 0W–20 is the best choice for good fuel economy and good starting in cold weather.

API-02

How to read oil container label

The ILSAC (International Lubricant Standardization and Approval Committee) Certification Mark is added to some oil containers to help you select the oil you should use.

Checking the engine coolant level

Look at the see–through coolant reservoir when the engine is cold. The coolant level is satisfactory if it is between the "FULL" and "LOW" lines on the reservoir. If the level is low, add the coolant. (For the coolant type, see "Coolant type selection" described below.)

The coolant level in the reservoir will vary with engine temperature. However, if the level is on or below the "LOW" line, add coolant. Bring the level up to the "FULL" line.

If the coolant level drops within a short time after replenishing, there may be a leak in the system. Visually check the radiator, hoses, engine coolant filler cap, radiator cap and drain cock and water pump.

If you can find no leak, have your Scion dealer test the cap pressure and check for leaks in the cooling system.

⚠ CAUTION

To prevent burning yourself, do not remove the radiator cap when the engine is hot.

Coolant type selection

Use of improper coolants may damage your engine cooling system.

Only use "Toyota Super Long Life Coolant" or similar high quality ethylene glycol based non–silicate, non–amine, non–nitrite, and non–borate coolant with long–life hybrid organic acid technology. (Coolant with long–life hybrid organic acid technology is a combination of low phosphates and organic acids.)

"Toyota Super Long Life Coolant" is a mixture of 50% coolant and 50% deionized water. This coolant provides protection down to about –35°C (–31°F).

NOTICE

Do not use plain water alone.

Scion recommends “Toyota Super Long Life Coolant”, which has been tested to ensure that it will not cause corrosion nor result in malfunction of your engine coolant system with proper usage. “Toyota Super Long Life Coolant” is formulated with long–life hybrid organic acid technology and has been specifically designed to avoid engine cooling system malfunction on Scion vehicles.

Please contact your Scion dealer for further details.

Checking the radiator and condenser

If either of the above parts are extremely dirty or you are not sure of their condition, take your vehicle to a Scion dealer.

⚠ CAUTION

To prevent burning yourself, be careful not to touch the radiator or condenser when the engine is hot.

NOTICE

To prevent damage to the radiator and condenser, do not perform the work by yourself.

Checking brake fluid

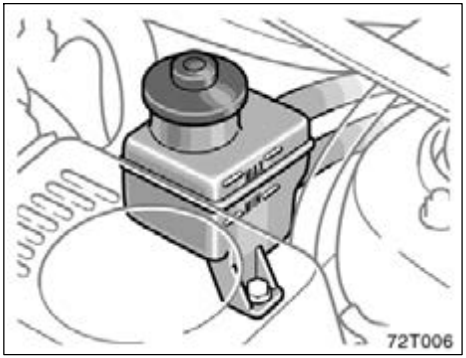

To check the fluid level, simply look at the see–through reservoir. The level should be between the “MAX” and “MIN” lines on the reservoir.

It is normal for the brake fluid level to go down slightly as the brake pads wear. So be sure to keep the reservoir filled.

If the reservoir needs frequent refilling, it may indicate a serious mechanical problem.

If the level is low, add SAE J1703 or FMVSS No.116 DOT 3 brake fluid to the brake reservoir.

Remove and replace the reservoir cap by hand. Fill the brake fluid up to the “MAX” line. This brings the fluid to the correct level when you put the cap back on.

Use only newly opened brake fluid. Once opened, brake fluid absorbs moisture from the air, and excess moisture can cause a dangerous loss of braking.

⚠ CAUTION

Take care when filling the reservoir because brake fluid can harm your hands or eyes. If fluid gets on your hands or in your eyes, flush the affected area with clean water immediately. If you still feel uncomfortable with your hands or eyes, go to the doctor.

NOTICE

If you spill some of the fluid, be sure to wipe it off to prevent it from damaging the parts or paintwork.

Checking power steering fluid

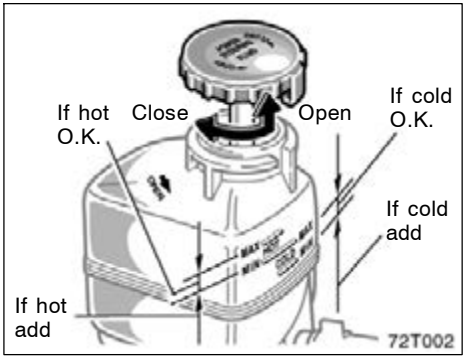

Check the fluid level through the reservoir. If necessary, add automatic transmission fluid DEXRON®II or III.

If the vehicle has been driven around 80 km/h (50 mph) for 20 minutes (a little more in frigid temperatures), the fluid is hot (60°C–80°C or 140°F–175°F). You may also check the level when the fluid is cold (about room temperature, 10°C–30°C or 50°F–85°F) if the engine has not been run for about five hours.

Clean all dirt from outside of the reservoir tank and look at the fluid level. If the fluid is cold, the level should be in the “COLD” range. Similarly, if it is hot, the fluid level should be in the “HOT” range. If the level is at the low side of either range, add automatic transmission fluid DEXRON®II or III to bring the level within the range.

To remove the reservoir cap, turn it counterclockwise and lift up. To reinstall it, turn it clockwise. After replacing the reservoir cap, visually check the steering box case, vane pump and hose connections for leaks or damage.

⚠ CAUTION

The reservoir tank may be hot so be careful not to burn yourself.

NOTICE

Avoid overfilling, or the power steering could be damaged.

Checking tire inflation pressure

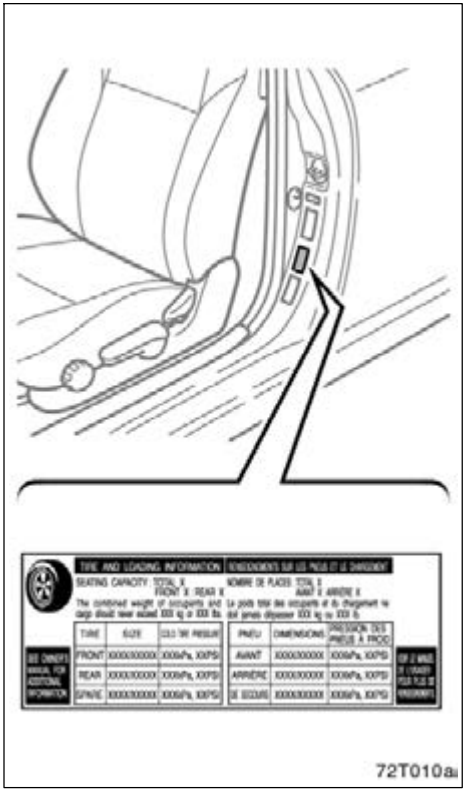

Keep your tire inflation pressures at the proper level.

The recommended cold tire inflation pressures, tire sizes and the combined weight of occupants and cargo (vehicle capacity weight) are described on page 262 and 265. They are also described on the tire and loading information label as shown.

You should check the tire inflation pressures every two weeks, or at least once a month. And do not forget the spare!

The following instructions for checking tire inflation pressure should be observed:

- **The pressure should be checked only when the tires are cold.** If your vehicle has been parked for at least 3 hours and has not been driven for more than 1.5 km or 1 mile since, you will get an accurate cold tire inflation pressure reading.
- **Always use a tire pressure gauge.** The appearance of a tire can be misleading. Besides, tire inflation pressures that are even just a few pounds off can degrade ride and handling.
- **Take special care when adding air to the compact spare tire.** The smaller tire size can gain pressure very quickly. Add compressed air in small quantities and check the pressure often until it reaches the specified pressure.
- **Do not bleed or reduce tire inflation pressure after driving.** It is normal for the tire inflation pressure to be higher after driving.
- **Never exceed the vehicle capacity weight.** Passenger and luggage weight should be located so that the vehicle is balanced.

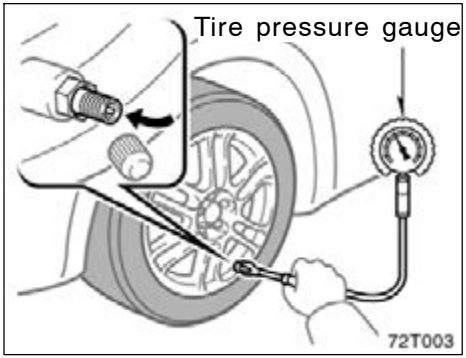

INSPECTION AND ADJUSTMENT PROCEDURE

1. Remove the tire valve cap.
2. Press the tip of the tire pressure gauge to the tire valve.
3. Read the pressure using graduations of the gauge.
4. In case the tire inflation pressure is not within the prescribed range, insert the compressed air from the valve. In case of applying too much air, press the center of the valve and release the air to adjust.
5. After completing the tire inflation pressure measurement and adjustment, apply soapy water to the valve and check for leakage.
6. Install the tire valve cap.

If a gauge and air pump are not available, have your vehicle checked by your Scion dealer.

⚠ CAUTION

Be sure to reinstall the tire valve caps. Without the valve caps, dirt or moisture could get into the valve core and cause air leakage. If the caps have been lost, have new ones put on as soon as possible.

Incorrect tire inflation pressure may waste fuel, reduce the comfort of driving, reduce tire life and make your vehicle less safe to drive.

If a tire frequently needs refilling, have it checked by your Scion dealer.

⚠ CAUTION

Keep your tires properly inflated. Otherwise, the following conditions may occur and cause an accident resulting in death or serious injuries.

Low tire pressure (underinflation)—

- **Excessive wear**
- **Uneven wear**
- **Poor handling**
- **Possibility of blowouts from an overheated tire**
- **Poor sealing of the tire bead**
- **Wheel deformation and/or tire separation**
- **A greater possibility of tire damage from road hazards**

High tire pressure (overinflation)—

- **Poor handling**
- **Excessive wear**
- **Uneven wear**
- **A greater possibility of tire damage from road hazards**

Checking and replacing tires

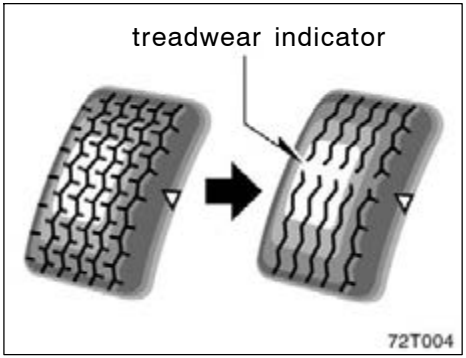

CHECKING YOUR TIRES

Check the tire's tread for treadwear indicators. If the indicators show, replace the tires. The location of treadwear indicators is shown by the "TWI" or "Δ" marks, etc., molded on the sidewall of each tire.

The tires on your Scion have built–in treadwear indicators to help you know when the tires need replacement. When the tread depth wears to 1.6 mm (0.06 in.) or less, the indicators will appear. If you can see the indicators in two or more adjacent grooves, the tire should be replaced. The lower the tread, the higher the risk of skidding.

Your Scion has been fitted with specially developed tires which provide exceptional dynamic performance under general road conditions. However your riding comfort may worsen a little and road noise may increase during driving. You may also notice that your tires will wear more rapidly and tire grip performance will be reduced on the snowy and/or icy roads when compared to standard tires. Be sure to have snow tires or tire chains on the snowy and/or icy roads and drive carefully with the speed appropriate for road conditions.

NOTICE

Low profile tire like 215/45ZR17 may have greater damage than usual tires to its tire wheel when receiving impact from the road surface. Therefore, pay attention to the followings.

- ***Be sure to use with proper tire pressure. If the tire pressure is low, the tire may have a greater damage. For detailed information about tire pressure, see page 265.***
- ***Avoid driving onto high, sharp–edged objects and other road hazards. Failure to do so can lead to severe tire damage.***

The effectiveness of snow tires is lost if the treadwears down below 4 mm (0.16 in.).

If you have tire damage such as cuts, splits, cracks deep enough to expose the fabric, or bulges indicating internal damage, the tire should be replaced.

If a tire often goes flat or cannot be properly repaired due to the size or location of a cut or other damage, it should be replaced. If you are not sure, consult with your Scion dealer.

If air loss occurs while driving, do not continue driving. Driving even a short distance can damage a tire beyond repair.

Any tires which are over 6 years old must be checked by a qualified technician even if damage is not obvious.

Tires deteriorate with age even if they have never or seldom been used.

This applies also to the spare tire and tires stored for future use.

REPLACING YOUR TIRES

When replacing a tire, use a tire of the same size and construction, and the same or greater maximum load as the originally installed tires.

Using any other size or type of tire may seriously affect handling, ride, speedometer/odometer calibration, ground clearance, and clearance between the body and tires or snow chains.

Check that the maximum load of the replacement tire is greater than 1/2 of the Gross Axle Weight Ratings (GAWR) of either the front axle or the rear axle, whichever is greater.

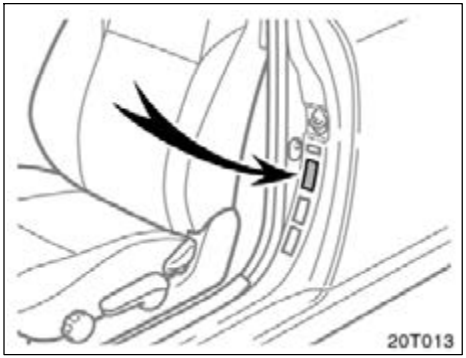

Certification Label

For the GAWR, see the Certification Label. For the maximum load of the tire, see the load limit at maximum cold tire inflation pressure mentioned on the sidewall of the tire. For details about the sidewall of the tire, see page 164.

⚠ CAUTION

Observe the following instructions. Otherwise, an accident may occur resulting in death or serious injuries.

- **Do not mix radial, bias belted, or bias–ply tires on your vehicle, as this may cause dangerous handling characteristics resulting in loss of control.**
- **Do not use tires other than the manufacturer's recommended size, as this may cause dangerous handling characteristics resulting in loss of control.**
- **Do not mix tires of different makes, models or tread patterns, and do not mix tires of remarkably different treadwear. This may cause dangerous handling characteristics resulting in loss of control.**

Scion recommends all four tires, or at least both of the front or rear tires be replaced at a time as a set.

See "If you have a flat tire" on page 198 for tire change procedure.

When a tire is replaced, the wheel should always be balanced.

An unbalanced wheel may affect vehicle handling and tire life. Wheels can get out of balance with regular use and should therefore be balanced occasionally.

When replacing a tubeless tire, the air valve should also be replaced with a new one.

Rotating tires

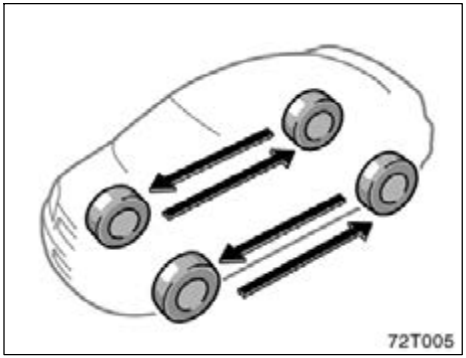

To equalize the wear and help extend tire life, Scion recommends that you rotate your tires according to the maintenance schedule. (For scheduled maintenance information, please refer to the "Scheduled Maintenance Guide" or "Owner's Manual Supplement".) However, the most appropriate timing for tire rotation may vary according to your driving habits and road surface conditions.

See "If you have a flat tire" on page 198 for tire change procedure.

When rotating tires, check for uneven wear and damage. Abnormal wear is usually caused by incorrect tire inflation pressure, improper wheel alignment, out–of–balance wheels, or severe braking.

⚠ CAUTION

Do not include a compact spare tire when rotating the tires. It is designed for temporary use only.

The tire pressure warning system must be initialized when rotating tires, in case that specified tire inflation pressure is different between front and rear.

Installing snow tires and chains

WHEN TO USE SNOW TIRES OR CHAINS

Snow tires or chains are recommended when driving on snow or ice.

On wet or dry roads, conventional tires provide better traction than snow tires.

SNOW TIRE SELECTION

If you need snow tires, select tires of the same size, construction and load capacity as the originally installed tires.

Do not use tires other than those mentioned above. Do not install studded tires without first checking local regulations for possible restrictions.

⚠ CAUTION

Do not use snow tires other than the manufacturer's recommended size, as this may cause dangerous handling characteristics resulting in loss of control. Otherwise, an accident may occur resulting in death or serious injuries.

SNOW TIRE INSTALLATION

Snow tires should be installed on all wheels.

Installing snow tires on the front wheels only can lead to an excessive difference in road grip capability between the front and rear tires which could cause loss of vehicle control.

When storing removed tires you should store them in a cool dry place.

Mark the direction of rotation and be sure to install them in the same direction when replacing.

⚠ CAUTION

- **Do not drive with the snow tires incorrectly inflated.**
- **Never drive over 120 km/h (75 mph) with any type of snow tires.**

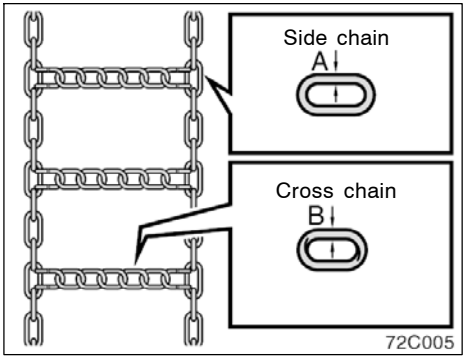

TIRE CHAIN SELECTION

Use the tire chains of correct size.

For 215/45ZR17 tires, use the following type chains.

		mm (in.)
A	Diameter of side chain:	3.5 (0.14)
B	Diameter of cross chain:	4.0 (0.16)

Regulations regarding the use of tire chains vary according to location or type of road, so always check local regulations before installing chains.

NOTICE

If the wrong combination of tire and chain is used, the chains could damage the vehicle body.

CHAIN INSTALLATION

Install the chains on the front tires as tightly as possible. Do not use tire chains on the rear tires. Retighten chains after driving 0.5–1.0 km (1/4–1/2 mile).

When installing chains on your tires, carefully follow the instructions of the chain manufacturer.

⚠ CAUTION

- **Do not exceed 50 km/h (30 mph) or the chain manufacturer's recommended speed limit, whichever is lower.**
- **Drive carefully avoiding bumps, holes, and sharp turns, which may cause the vehicle to bounce.**
- **Avoid sharp turns or locked–wheel braking, as use of chains may adversely affect vehicle handling.**
- **When driving with chains installed, be sure to drive carefully. Slow down before entering curves to avoid losing control of the vehicle. Otherwise an accident may occur.**

NOTICE

Do not attempt to use a tire chain on the compact spare tire, as it may result in damage to the vehicle as well as the tire.

Replacing wheels

As you might have difficulty in identifying a flat or deflated tire, a tire pressure warning system is provided on this vehicle.

When replacing the wheels, be sure to install tire pressure warning valves and transmitters on the wheels. Consult your Scion dealer about how to set up the tire pressure warning valves and transmitters.

⚠ CAUTION

- **Have the tires, wheels or tire pressure warning valves and transmitters replaced and ID codes registered by Scion dealer. If you need tire pressure warning valves and transmitters, purchase from Scion dealer.**
- **The tire pressure warning valve and transmitter nuts should always be tightened to a torque of 4 N·m (0.4 kgf·m, 2.9 ft·lbf).**
- **The use of non–genuine wheels may result in the tire pressure warning system failure or air–leak.**

WHEN TO REPLACE YOUR WHEELS

If you have wheel damage such as bending, cracks or heavy corrosion, the wheel should be replaced.

If you fail to replace damaged wheels, the tire may slip off the wheel or cause loss of handling control.

WHEEL SELECTION

When replacing wheels, care should be taken to ensure that the wheels are replaced by ones with the same load capacity, diameter, rim width, and offset.

This must be observed on compact spare tires, too.

Correct replacement wheels are available at your Scion dealer.

A wheel of a different size or type may adversely affect handling, wheel and bearing life, brake cooling, speedometer/odometer calibration, stopping ability, headlight aim, bumper height, vehicle ground clearance, and tire or snow chain clearance to the body and chassis.

Replacement with used wheels is not recommended as they may have been subjected to rough treatment or high mileage and could fail without warning. Also, bent wheels which have been straightened may have structural damage and therefore should not be used. Never use an inner tube in a leaking wheel which is designed for a tubeless tire.

⚠ CAUTION

Observe the following instruction. Otherwise, an accident may occur resulting in death or serious injuries.

Do not use wheels other than the manufacturer's recommended size, as this may cause dangerous handling characteristics resulting in loss of control.

Aluminum wheel precautions

- When installing aluminum wheels, check that the wheel nuts are tight after driving your vehicle the first 1600 km (1000 miles).
- If you have rotated, repaired, or changed your tires, check that the wheel nuts are still tight after driving 1600 km (1000 miles).
- When using tire chains, be careful not to damage the aluminum wheels.
- Use only Scion wheel nuts and wrench designed for your aluminum wheels.
- When balancing your wheels, use only Scion balance weights or equivalent and a plastic or rubber hammer.
- As with any wheel, periodically check your aluminum wheels for damage. If damaged, replace immediately.

SECTION 7–3

DO–IT–YOURSELF MAINTENANCE

Electrical components

Checking battery condition 252
Battery recharging precautions 253
Checking and replacing fuses 254
Adding washer fluid 255
Replacing light bulbs 255

Checking battery condition—
—Precautions

⚠ CAUTION

BATTERY PRECAUTIONS

The battery produces flammable and explosive hydrogen gas.

- **Do not cause a spark from the battery with tools.**
- **Do not smoke or light a match near the battery.**

The electrolyte contains poisonous and corrosive sulfuric acid.

- **Avoid contact with eyes, skin or clothes.**
- **Never ingest electrolyte.**
- **Wear protective safety glasses when working near the battery.**
- **Keep children away from the battery.**

EMERGENCY MEASURES

- **If electrolyte gets in your eyes, flush your eyes with clean water immediately and get immediate medical attention. If possible, continue to apply water with a sponge or cloth while en route to the medical office.**
- **If electrolyte gets on your skin, thoroughly wash the contact area. If you feel pain or burning, get medical attention immediately.**
- **If electrolyte gets on your clothes, there is a possibility of its soaking through to your skin, so immediately take off the exposed clothing and follow the procedure above, if necessary.**
- **If you accidentally swallow electrolyte, drink a large quantity of water or milk. Follow with milk of magnesia, beaten raw egg or vegetable oil. Then go immediately for emergency help.**

—Checking battery exterior

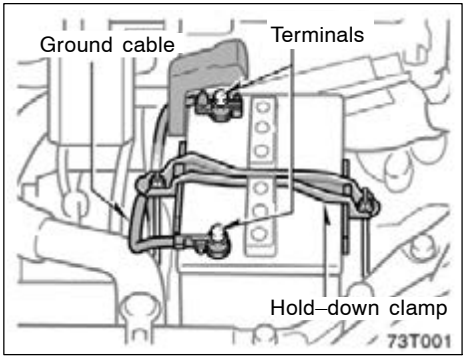

Check the battery for corroded or loose terminal connections, cracks, or loose hold–down clamp.

a. If the battery is corroded, wash it off with a solution of warm water and baking soda. Coat the outside of the terminals with grease to prevent further corrosion.

b. If the terminal connections are loose, tighten their clamp nuts—but do not overtighten.

c. Tighten the hold–down clamp only enough to keep the battery firmly in place. Overtightening may damage the battery case.

NOTICE

- ***Be sure the engine and all accessories are off before performing maintenance.***
- ***When checking the battery, remove the ground cable from the negative terminal ("–" mark) first and reinstall it last.***
- ***Be careful not to cause a short circuit with tools.***
- ***Take care no solution gets into the battery when washing it.***

If the battery is disconnected or run down, the power window, back door and panorama moonroof may not operate automatically and the jam protection function will not function correctly and does not open the back door after you reconnect, replace or recharge the battery. In any of these cases, you should normalize each system. To normalize them, see "Power windows" on page 18, "Back door" on page 19 and "Panorama moonroof" on page 26.

—Checking battery condition

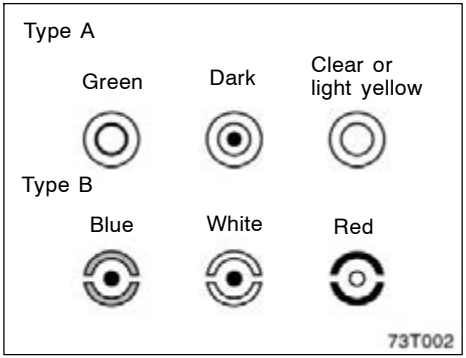

CHECKING BY THE INDICATOR

Check the battery condition by the indicator color.

Indicator color		Condition
Type A	Type B	
Green	Blue	Good
Dark	White	Charging necessary. Have battery checked by your Scion dealer.
Clear or light yellow	Red	Have battery checked by your Scion dealer.

Battery recharging precautions

During recharging, the battery is producing hydrogen gas.

Therefore, before recharging:

1. If recharging with the battery installed on the vehicle, be sure to disconnect the ground cable.
2. Be sure the power switch on the recharger is off when connecting the charger cables to the battery and when disconnecting them.

⚠ CAUTION

- **Always charge the battery in an unconfined area. Do not charge the battery in a garage or closed room where there is not sufficient ventilation.**
- **Only do a slow charge (5A or less). Charging at a quicker rate is dangerous. The battery may explode, causing personal injuries.**

NOTICE

Never recharge the battery while the engine is running. Also, be sure all accessories are turned off.

Checking and replacing fuses

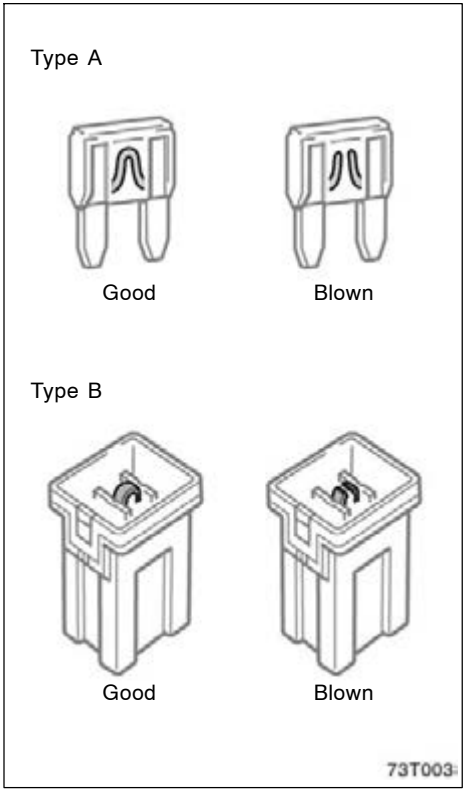

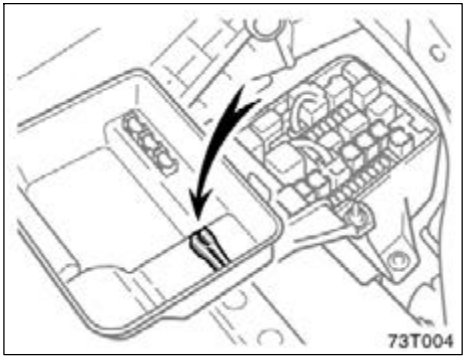

If the headlights or other electrical components do not work, check the fuses. If any of the fuses are blown, they must be replaced.

See “Fuse locations” on page 229 for locations of the fuses.

Turn the engine switch and inoperative component off. Pull the suspected fuse straight out and check it.

Determine which fuse may be causing the problem. The lid of the fuse box shows the name of the circuit for each fuse. See page 266 for the functions controlled by each circuit.

Type A fuses can be pulled out by the pull–out tool. The location of the pull–out tool is shown in the illustration.

If you are not sure whether the fuse has blown, try replacing the suspected fuse with one that you know is good.

If the fuse has blown, push a new fuse into the clip.

Only install a fuse with the amperage rating designated on the fuse box lid.

If you do not have a spare fuse, in an emergency you can pull out the “A/C” or “CIG” fuse, which may be dispensable for normal driving, and use it if its amperage rating is the same.

If you cannot use one of the same amperage, use one that is lower, but as close to the rating as possible. If the amperage is lower than that specified, the fuse might blow out again but this does not indicate anything wrong. Be sure to get the correct fuse as soon as possible and return the substitute to its original clip.

It is a good idea to purchase a set of spare fuses and keep them in your vehicle for emergencies.

If the new fuse immediately blows out, there is a problem with the electrical system. Have your Scion dealer correct it as soon as possible.

⚠ CAUTION

Never use a fuse with a higher amperage rating, or any other object, in place of a fuse. This may cause extensive damage and possibly a fire.

Adding washer fluid

If any washer does not work, the washer tank may be empty. Add washer fluid.

You may use plain water as washer fluid. However, in cold areas where temperatures range below the freezing point, use washer fluid containing antifreeze. This product is available at your Scion dealer and most auto parts stores. Follow the manufacturer's directions for how much to mix with water.

NOTICE

Do not use engine antifreeze or any other substitute because it may damage your vehicle's paint.

Replacing light bulbs—

The following illustrations show how to gain access to the bulbs. When replacing a bulb, make sure the engine switch and light switch are off. Use bulbs with the wattage ratings given in the table.

The high mounted stoplight consists of a number of LEDs. If any of the LEDs burn out, take your vehicle to your Scion dealer to have the light replaced.

⚠ CAUTION

- **To prevent burning yourself, do not replace the light bulbs while they are hot.**
- **Halogen bulbs have pressurized gas inside and require special handling. They can burst or shatter if scratched or dropped. Hold a bulb only by its plastic or metal case. Do not touch the glass part of a bulb with bare hands.**

NOTICE

Only use a bulb of the listed type.

The inside of the lens of exterior lights such as headlights may temporarily fog up when the lens becomes wet in the rain or in a car wash. This is not a problem because the fogging is caused by the temperature difference between the outside and inside of the lens, just like the windshield fogs up in the rain. However, if there is a large drop of water on the inside of the lens, or if there is water pooled inside the light, contact your Scion dealer.

Light bulbs	Bulb No.	W	Type
Headlights (high)	9005	60	A
Headlights (low)	—	55	B
Front turn signal lights	—	21	C
Parking lights	—	5	D
Front side marker lights	—	5	D
Stop/tail and rear side marker lights	7443	21/5	D
Rear turn signal lights	7440	21	D
Back–up lights	921	18	D
High mounted stoplight	—	2.6	F
License plate lights	168	5	D
Interior light (Front)	—	5	D
Interior light (Rear)	—	8	D

Light bulbs	Bulb No.	W	Type
Personal lights	—	5	D
Luggage compartment light	—	5	E

A: HB3 halogen
B: H11 halogen
C: Wedge base bulbs (amber)
D: Wedge base bulbs (clear)
E: Double end bulbs
F: LED

—Headlights

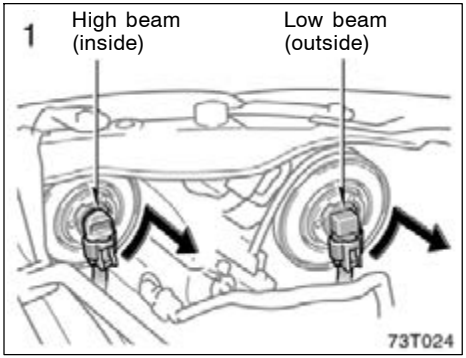

1. **Open the hood. Turn the bulb base counterclockwise to the front of the vehicle as shown.**

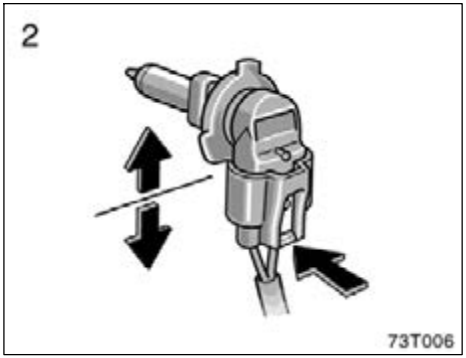

2. **Unplug the connector while depressing the lock release.**

If the connector is tight, wiggle it.

3. **Plug in a new bulb into the connector and install it into the mounting hole.**

Aiming is not necessary after replacing the bulb. When aiming adjustment is necessary, contact your Scion dealer.

—Front turn signal lights

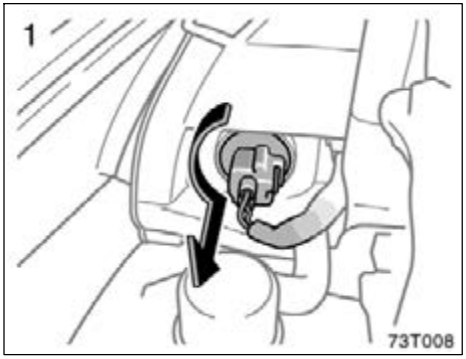

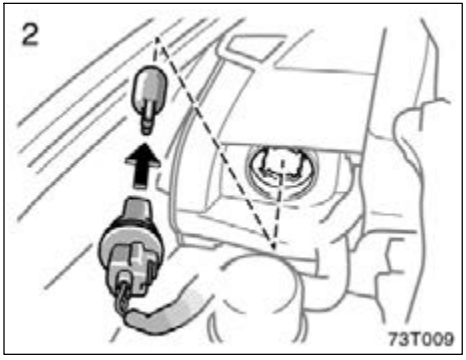

—Parking lights

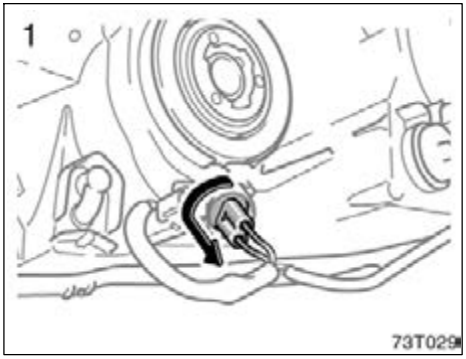

—Front side marker lights

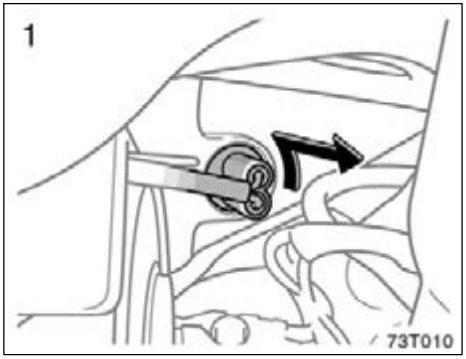

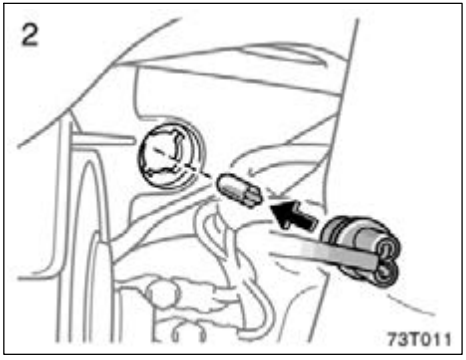

—Stop/tail and rear side marker, rear turn signal, back–up lights

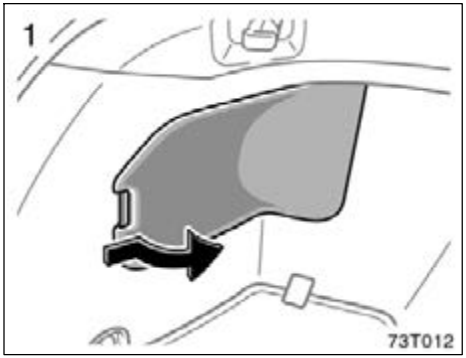

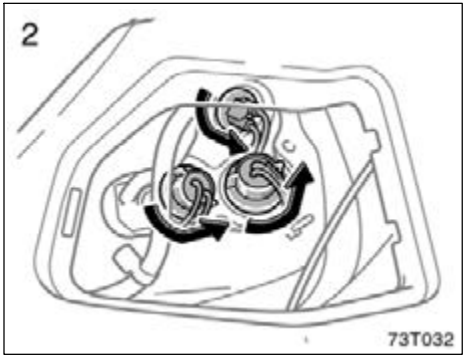

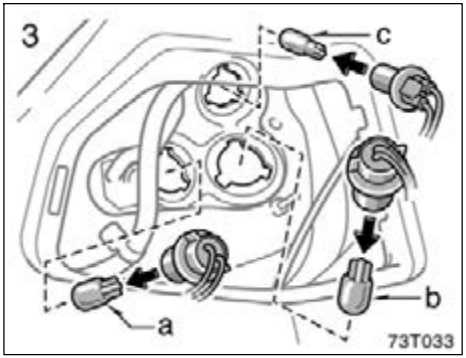

a: Rear turn signal light
b: Stop/tail and rear side marker light
c: Back–up light

—License plate lights

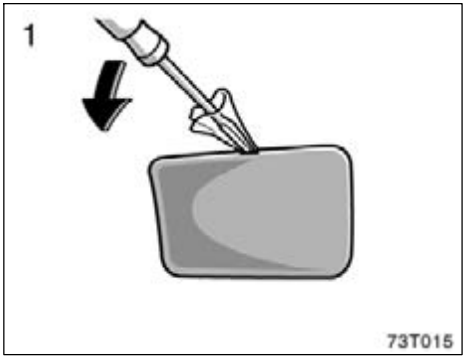

Remove the cover with a flathead screwdriver which is wrapped with a cloth.

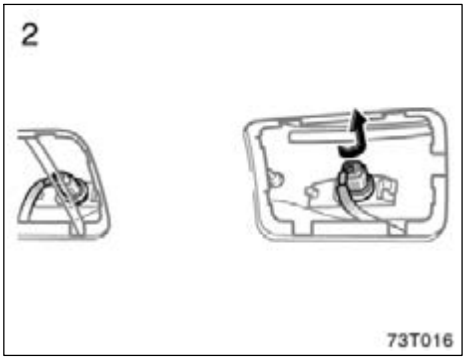

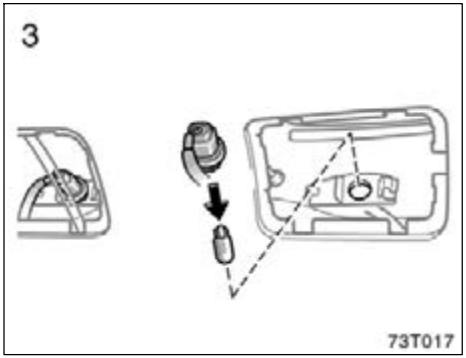
3
73T017

SECTION 8

SPECIFICATIONS

Specifications

Dimensions and weights 262
Engine 262
Fuel 262
Service specifications 263
Tires 265
Fuses 266

Dimensions and weights

Overall length mm (in.):
4420 (174.0)

Overall width mm (in.):
1755 (69.1)

Overall height mm (in.):
1415 (55.7)

Wheelbase mm (in.):
2700 (106.3)

Front tread mm (in.):
1505 (59.3)

Rear tread mm (in.):
1505 (59.3)

Vehicle capacity weight (occupants+cargo) kg (lb.):
392 (865)

Engine

Model:
2.4L 4–cylinder (2AZ–FE)

Type:
4 cylinder in line, 4 cycle, gasoline

Bore and stroke, mm (in.):
88.5 × 96.0 (3.48 × 3.78)

Displacement, cm^3 (cu. in.):
2362 (144.1)

Fuel

Fuel type:
Unleaded gasoline, Octane Rating 87 (Research Octane Number 91) or higher

Fuel tank capacity, L (gal., Imp.gal.):
55 (14.5, 12.1)

Service specifications

ENGINE

Valve clearance (engine cold), mm (in.):

Intake	0.19–0.29 (0.007–0.012)
Exhaust	0.38–0.48 (0.015–0.019)

Spark plug type:

DENSO	SK20R11
NGK	IFR6A11

Spark plug gap, mm (in.):
1.1 (0.043)

ENGINE LUBRICATION

Oil capacity (drain and refill), L (qt., Imp. qt.):

With filter	3.8 (4.0, 3.3)
Without filter	3.6 (3.8, 3.2)

"Toyota Genuine Motor Oil" is used in your Scion vehicle. Use Scion approved "Toyota Genuine Motor Oil" or equivalent to satisfy the following grade and viscosity.

Oil grade:

ILSAC multigrade engine oil

Please contact your Scion dealer for further details.

Recommended viscosity:

SAE 5W–20 or 0W–20

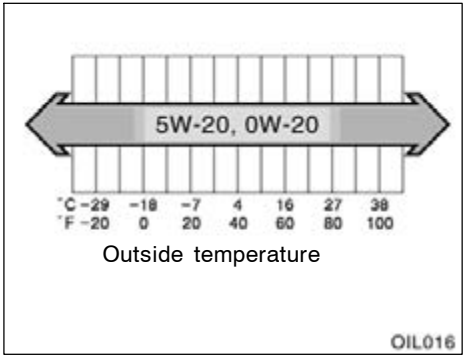

COOLING SYSTEM

Total capacity, L (qt., Imp.qt.):

Manual transmission	6.8 (7.2, 6.0)
Automatic transmission	6.7 (7.1, 5.9)

Coolant type:

"Toyota Super Long Life Coolant" is used in your Scion vehicle at factory fill. In order to avoid technical problems, only use "Toyota Super Long Life Coolant" or similar high quality ethylene glycol based non–silicate, non–amine, non–nitrite, and non–borate coolant with long–life hybrid organic acid technology. (Coolant with long–life hybrid organic acid technology is a combination of low phosphates and organic acids.)

Do not use plain water alone.

Please contact your Scion dealer for further details.

BATTERY

Open voltage* at 20°C (68°F):

12.6–12.8 V	Fully charged
12.2–12.4 V	Half charged
11.8–12.0 V	Discharged

*: Voltage that is checked 20 minutes after the key is removed with all the lights turned off

Charging rates: 5 A max.

CLUTCH

Pedal free play, mm (in.):
5–15 (0.2–0.6)

Fluid type:
SAE J1703 or FMVSS No. 116 DOT 3

MANUAL TRANSAXLE

Oil capacity, L (qt., Imp.qt.):
2.5 (2.6, 2.2)

Oil type:
Gear oil API GL–4 or GL–5

Recommended oil viscosity:
SAE 75W–90

AUTOMATIC TRANSAXLE

Fluid capacity, L (qt., Imp.qt.):
8.1 (8.6, 7.1)

Fluid type:
Toyota Genuine ATF WS

Change automatic transmission fluid only as necessary.

Generally, it is necessary to change automatic transmission fluid only if your vehicle is driven under one of the Special Operating Conditions listed in your "Scheduled Maintenance Guide" or "Owner's Manual Supplement". When changing the automatic transmission fluid, use only "Toyota Genuine ATF WS" to aid in assuring optimum transaxle performance.

Notice: Using automatic transmission fluid other than "Toyota Genuine ATF WS" may cause deterioration in shift quality, locking up of your transmission accompanied by vibration, and ultimately damage the automatic transmission of your vehicle.

BRAKES

Minimum pedal clearance when depressed with the pressure of 490 N (50 kgf, 110 lbf) with the engine running, mm (in.):
90 (3.5)

Pedal free play, mm (in.):
1–6 (0.04–0.24)

Pad wear limit, mm (in.):
1.0 (0.04)

Lining wear limit, mm (in.):
1.0 (0.04)

Parking brake adjustment when pulled with the force of 196 N (20 kgf, 44 lbf):
6–9 clicks

Fluid type:
SAE J1703 or FMVSS No. 116 DOT 3

STEERING

Wheel free play:
Less than 30 mm (1.2 in.)

Power steering fluid type:
Automatic transmission fluid DEXRON®II or III

Tires

Tire size and cold tire inflation pressure:

Front and rear

Tire size	Tire inflation pressure kPa (kgf/cm^2 or bar, psi)		Wheel size
	Front	Rear	
215/45ZR17	220 (2.2, 32)	200 (2.0, 29)	17 x 7 JJ

When driving under the above vehicle conditions at sustained high speeds above 160 km/h (100 mph), in countries where such speeds are permitted by–law, inflate the front tires to 260 kPa (2.7 kgf/cm^2 or 2.6 bar, 38 psi), rear tires to 210 kPa (2.2 kgf/cm^2 or 2.1 bar, 31 psi) provided that it does not exceed the maximum cold tire inflation pressure molded on the tire sidewall.

Spare

Tire size	Tire inflation pressure kPa (kgf/cm^2 or bar, psi)	Wheel size
T125/70D17 98M	420 (4.2, 60)	17 x 4T

Wheel nut torque, N·m (kgf·m, ft·lbf):

103 (10.5, 76)

NOTE: For complete information on tires (e.g. replacing tires or replacing wheels), see “Checking tire inflation pressure” through “Replacing wheels”, on pages 241 through 248.

Fuses

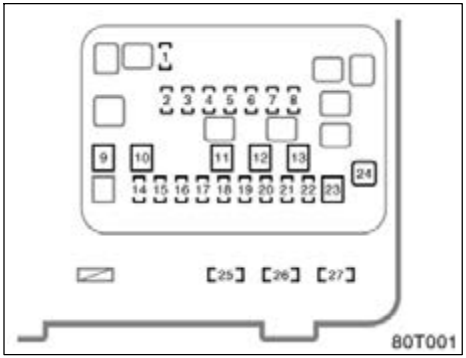

Engine compartment

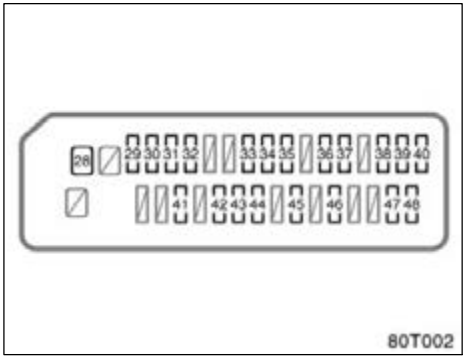

Instrument panel

Fuses

1. **ST 7.5 A:** Starting system, multiport fuel injection system/sequential multiport fuel injection system
2. **H–LP RH LO 10 A:** Right hand headlight (low beam)
3. **H–LP LH LO 10 A:** Left hand headlight (low beam)
4. **H–LP RH HI 10 A:** Right hand headlight (high beam)
5. **H–LP LH HI 10 A:** Left hand headlight (high beam)
6. **ECU–B 10 A:** Multiplex communication system (power door lock system, illuminated entry system, wireless remote control system, back door opener, panorama moonroof), air conditioning system, gauges and meters
7. **DOME 7.5 A:** Interior lights, personal lights, engine (ignition) switch light, luggage compartment light
8. **RAD NO.1 20 A:** Audio system
9. **HTR 40 A:** Air conditioning system
10. **ABS NO.2 40 A:** Anti–lock brake system
11. **ABS NO.1 50 A:** Anti–lock brake system
12. **CDS 30 A:** Electric cooling fan
13. **RDI 30 A:** Electric cooling fan
14. **EFI 20 A:** Multiport fuel injection system/sequential multiport fuel injection system
15. **OBD2 10 A:** On–board diagnosis system
16. **TURN–HAZ 10 A:** Turn signal lights, emergency flashers
17. **HORN 10 A:** Horn
18. **IGN 15 A:** Multiport fuel injection system/sequential multiport fuel injection system
19. **ETCS 10 A:** Multiport fuel injection system/sequential multiport fuel injection system
20. **AM2 30 A:** Starting system, “IG2” and “MET IG2” fuses
21. **ALT–S 7.5 A:** Charging system
22. **DCC 30 A:** “ECU–B”, “RAD1” and “DOME” fuse
23. **MAIN 40 A:** “H–LP RH LO”, “H–LP LH LO”, “H–LP RH HI” and “H–LP LH HI” fuses

24. **ALT 120 A:** “HTR”, “ABS NO.1”, “ABS NO.2”, “RDI”, “CDS”, “DEF”, “TAIL”, “PANEL”, “DOOR”, “STOP”, “ACC SOCKET”, “GAUGE”, “ECU–IG”, “FR WIP”, “WSH”, “AM1”, “FR DOOR”, “FL DOOR”, “S/ROOF”, “A/C” and “FR FOG” fuses
25. **SPARE 30 A:** Spare fuse
26. **SPARE 20 A:** Spare fuse
27. **SPARE 10 A:** Spare fuse
28. **DEF 30 A:** Rear window defogger
29. **TAIL 10 A:** Tail lights, parking lights, license plate lights, front side maker lights
30. **PANEL 7.5 A:** Instrument cluster lights, instrument panel lights, gauges and meters, audio system, console box illumination
31. **A/C 10 A:** Air conditioning system
32. **FR DOOR 20 A:** Power windows
33. **S/ROOF 20 A:** Panorama moonroof
34. **CIG 15 A:** Cigarette lighter
35. **ACC 7.5 A:** Shift lock control system, power outlet, audio system, power rear view mirrors
36. **RR DEF I/UP 7.5 A:** Rear window defogger
37. **ACC SOCKET 15 A:** Power outlet
38. **FL DOOR 20 A:** Power windows
39. **IG2 15 A:** Multiport fuel injection system/sequential multiport fuel injection system, SRS airbag system, security system
40. **MET IG2 10 A:** Gauges and meters
41. **FR WIP 30 A:** Windshield wipers
42. **FR WSH 15 A:** Windshield washer
43. **ECU–IG 7.5 A:** Multiport fuel injection system/sequential multiport fuel injection system, shift lock control system, electric cooling fan, panorama moonroof, anti–lock brake system
44. **GAUGE 10 A:** Back–up lights, electric cooling fan, air conditioning system, emergency flasher, power windows, power door lock system, gauges and meters
45. **STOP 10 A:** Stop lights, high mounted stoplight, shift lock control system, multiport fuel injection system/sequential multiport fuel injection system, anti–lock brake system
46. **DOOR 20 A:** Power door lock system
47. **FR FOG 15 A:** Fog lights
48. **AM1 25 A:** Starting system, “CIG” and “ACC” fuses

SECTION 9

REPORTING SAFETY DEFECTS FOR U.S. OWNERS

Reporting safety defects for U.S. owners

Reporting safety defects for U.S. owners 270

Reporting safety defects for U.S. owners

If you believe that your vehicle has a defect which could cause a crash or could cause injury or death, you should immediately inform the National Highway Traffic Safety Administration (NHTSA) in addition to notifying Scion, a marque of Toyota Motor Sales, U.S.A., Inc.
(Toll–free: 1–866–707–2466).

If NHTSA receives similar complaints, it may open an investigation, and if it finds that a safety defect exists in a group of vehicles, it may order a recall and remedy campaign. However, NHTSA cannot become involved in individual problems between you, your dealer, or Scion, a marque of Toyota Motor Sales, U.S.A., Inc.

To contact NHTSA, you may call the Vehicle Safety Hotline toll–free at 1–888–327–4236 (TTY: 1–800–424–9153); go to *http://www.safercar.gov*; or write to: Administrator, NHTSA, 1200 New Jersey Ave, S.E., Washington, DC 20590. You can also obtain other information about motor vehicle safety from *http://www.safercar.gov*.

Quick index

- If a service reminder indicator or warning buzzer comes on 107
- If your vehicle will not start 194
- If your engine stalls while driving 197
- If your vehicle overheats 197
- If you have a flat tire 198
- If your vehicle needs to be towed 209
- Tips for driving during break–in period 152
- How to start the engine 184
- General maintenance 223

Gas station information

Fuel type:

UNLEADED gasoline, Octane Rating 87 (Research Octane Number 91) or higher

See page 152 for detailed information.

Fuel tank capacity:

55 L (14.5 gal., 12.1 Imp.gal.)

Engine oil:

ILSAC multigrade engine oil is recommended.

See page 237 for detailed information.

Tire information: See pages 241 through 248.

Tire inflation pressure: See page 265.

Publication No. OM21030U
Part No. 01999-21030
Printed in Japan 01–0904–00 I
tC(¿¿U)

You should know as much about the quality and importance of proper maintenance of your new vehicle as the people who built it.

The Scion authorized Repair Manual tells you how to maintain your vehicle and enables you to correctly perform your own maintenance.

The best way to keep your new vehicle in top running order is to maintain it properly from the moment you drive it off the showroom floor.

The Scion authorized Repair Manual is packed with literally everything you need to know to perform your own maintenance in virtually every area of your new vehicle.

Maintenance procedures for the engine, chassis, body, electrical system, and more, are clearly explained and illustrated.

Periodic maintenance and tune–up

Periodic maintenance and tune–up helps to prevent small problems from growing into larger ones later on. The repair manual outlines exactly what maintenance is required and clearly explains how to do the work yourself step–by–step.

Areas covered include such things as spark plug replacement, valve clearance adjustment and engine oil and filter replacement.

Where to obtain the Repair Manual

The repair manual for tC may be purchased from any Scion dealer or the Material Distribution Center. To purchase the repair manual, please contact your Scion dealer or call the Material Distribution Center toll–free at 1–800–622–2033.

WE REALLY CARE ABOUT YOU — PLEASE BUCKLE UP

Scion has made a special effort to encourage use of seat belts.

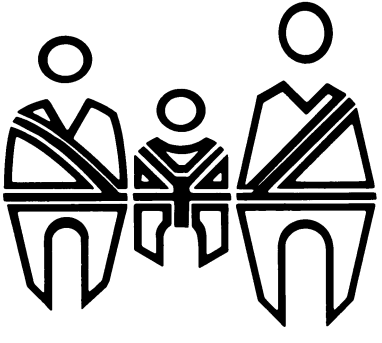

Scion belts are:

- **Comfortable**
- **Easy to use**
- **Convenient**

We encourage you to use your belts every time you drive.