SUSPENSION SYSTEM

PROBLEM SYMPTOMS TABLE

HINT:
Use the table below to help you find the cause of the problem. The numbers indicate the ranked order of probability of each of the possible causes. Check each part in the order suggested. If necessary, replace the applicable parts.

Symptom	Suspected area	See page
Vehicle unstable	1. Tires (Worn or improperly inflated)	TW-1
	2. Front wheel alignment	SP-2
	3. Rear wheel alignment	SP-10
	4. Hub bearing	AH-1
	5. Front shock absorber with coil spring	SP-18
	6. Rear shock absorber	SP-55
	7. Rear coil spring	SP-49
Bottoming	1. Vehicle (Overloaded)	-
	2. Front shock absorber with coil spring	SP-18
	3. Rear shock absorber	SP-55
	4. Rear coil spring	SP-49
Swaying/pitching	1. Tires (Worn or improperly inflated)	TW-1
	2. Front stabilizer bar	SP-42
	3. Front shock absorber with coil spring	SP-18
	4. Rear shock absorber	SP-55
	5. Rear coil spring	SP-49
Front wheel shimmy	1. Tires (Worn or improperly inflated)	TW-1
	2. Wheels (Out of balance)	TW-2
	3. Front wheel alignment	SP-2
	4. Front suspension lower arm	SP-23
	5. Front shock absorber with coil spring	SP-18
	6. Hub bearing	AH-1
Rear wheel shimmy	1. Tires (Worn or improperly inflated)	TW-1
	2. Wheels (Out of balance)	TW-2
	3. Rear wheel alignment	SP-10
	4. Rear axle beam	SP-63
	5. Rear shock absorber	SP-55
	6. Rear coil spring	SP-49
	7. Hub bearing	AH-1
Abnormal tire wear	1. Tires (Worn or improperly inflated)	TW-1
	2. Wheels (Out of balance)	TW-2
	3. Front wheel alignment	SP-2
	4. Rear wheel alignment	SP-10
Vehicle pull	1. Tires (Worn or improperly inflated)	TW-1
	2. Front wheel alignment	SP-2
	3. Rear wheel alignment	SP-10
	4. Brake (Dragging)	BR-4
	5. Steering wheel (Off center)	-

FRONT WHEEL ALIGNMENT

ADJUSTMENT

1. INSPECT TIRES (See page TW-1)

2. MEASURE VEHICLE HEIGHT

(a) Hatch back:

Vehicle height

Destination	A-B	C-D
Except for Rough Road Package	88 mm (3.46 in.)	20 mm (0.79 in.)
Rough Road Package	68 mm (2.68 in.)	0 mm (0 in.)

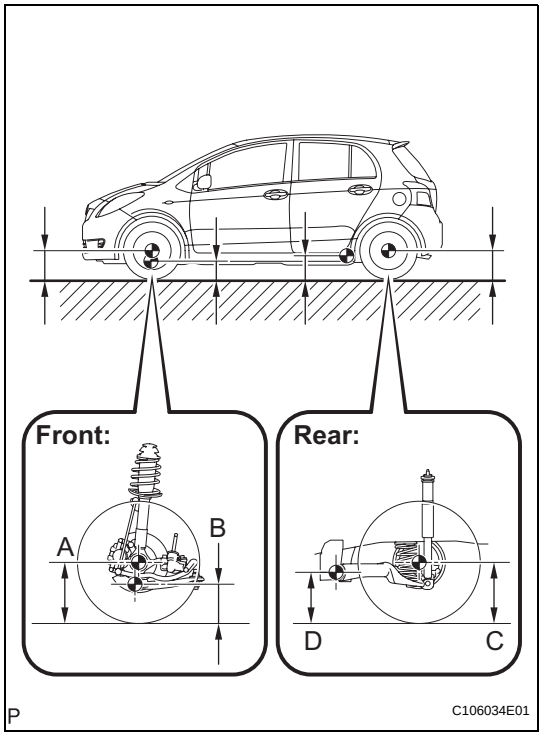

Measuring points:

A:
Ground clearance of front wheel center

B:
Ground clearance of lower arm set front bolt center

C:
Ground clearance of rear wheel center

D:
Ground clearance of axle beam set bolt center

NOTICE:
Before inspecting the wheel alignment, check the vehicle height.

HINT:
Bounce the vehicle up and down at the corners to stabilize the suspension before inspecting the vehicle height.

(b) Sedan:

Vehicle height

Destination	A-B	C-D
Except for Rough Road Package	87 mm (3.43 in.)	16 mm (0.63 in.)
Rough Road Package	67 mm (2.64 in.)	-2 mm (-0.08 in.)

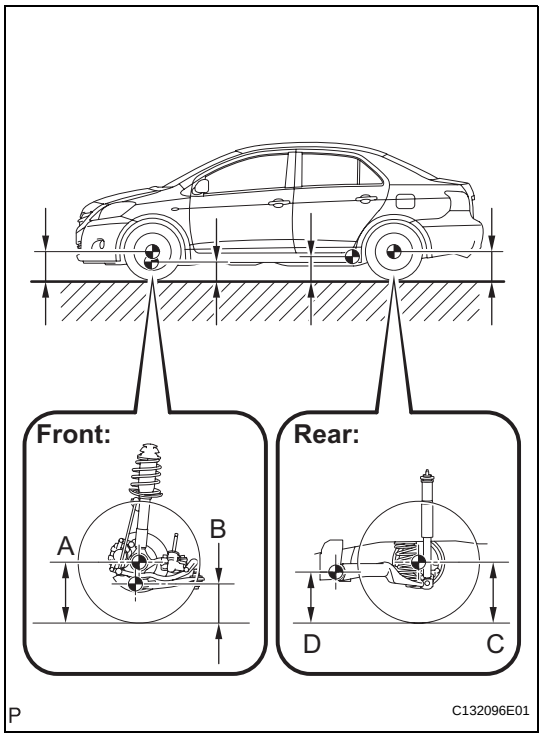

Measuring points:

A:
Ground clearance of front wheel center

B:
Ground clearance of lower arm set front bolt center

C:
Ground clearance of rear wheel center

D:
Ground clearance of axle beam set bolt center

NOTICE:
Before inspecting the wheel alignment, check the vehicle height.

HINT:
Bounce the vehicle up and down at the corners to stabilize the suspension before inspecting the vehicle height.

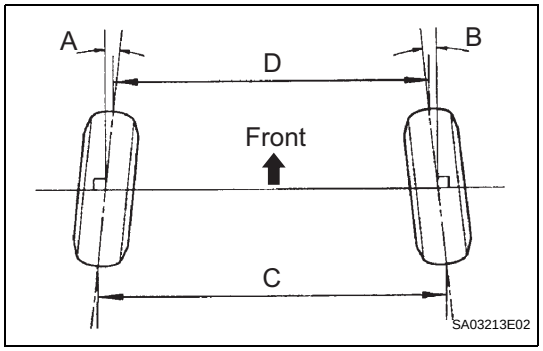

3. INSPECT TOE-IN

Toe-in:

Hatchback

A+B	C-D
0°09' +- 0°13' (0.15° +- 0.22°)	**1.5 +- 2.0 mm (0.06 +- 0.08 in.)**

Sedan

A+B	C-D
0°12' +- 0°06' (0.20° +- 0.10°)	**2.0 +- 2.0 mm (0.08 +- 0.08 in.)**

HINT:
Only measure C-D when A+B can not be measured.
If the toe-in is not within the specified value, adjust it at the rack ends.

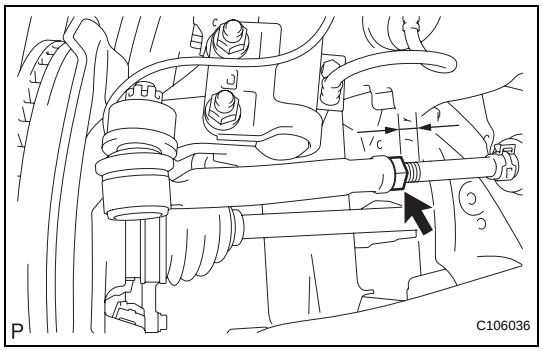

4. ADJUST TOE-IN

(a) Measure the thread lengths of the right and left rack ends.
Standard:
Difference in thread length of 1.5 mm (0.059 in.) or less

(b) Remove the rack boot set clips.

(c) Loosen the tie rod end lock nuts.

(d) Adjust the rack ends if the difference in thread length between the right and left rack ends is not within the specified range.
(1) Extend the shorter rack end if the measured toe-in deviates toward the outer-side.
(2) Shorten the longer rack end if the measured toe-in deviates toward the inner-side.

(e) Turn the right and left rack ends by an equal amount to adjust the toe-in.
HINT:
Try to adjust the toe-in to the center of the specified range.

(f) Make sure that the lengths of the right and left rack ends are the same.
Toe-in

Body Type	Toe-in
Hatchback	**1.5 +- 1.0 mm (0.06 +- 0.04 in.)**
Sedan	**2.0 +- 1.0 mm (0.08 +- 0.04 in.)**

(g) Tighten the tie rod end lock nuts to the specified torque.
Torque: 75 N*m (760 kgf*cm, 55 ft.*lbf)

NOTICE:
Provisionally tighten the lock nut while holding the hexagonal part of the steering rack end so that the lock nut and the steering rack end do not turn together. Hold the width across flat of the tie rod end and tighten the lock nut.

(h) Place the boots on the seats.

(i) Using pliers, install the clip as shown in the illustration.
NOTICE:
Make sure that the boots are not twisted.

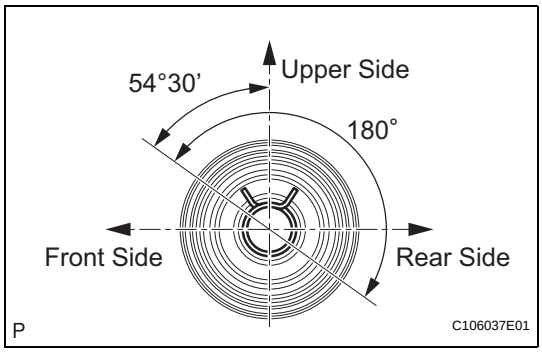

5. INSPECT WHEEL TURNING ANGLE

(a) Fully turn the steering wheel left and right, and measure the wheel turning angle.

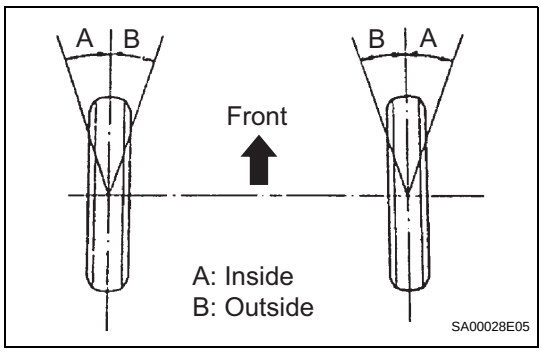

Wheel turning angle

Destination	Inside Wheel	Outside Wheel (Reference)
Except for Rough Road Package	40°57' +- 2° (40.95° +- 2°)	35°17' (35.29°)
Rough Road Package	41°22' +- 2° (41.37° +- 2°)	35°45' (35.75°)

If the right and left inside wheel angles are not within the specified range, check the right and left rack end lengths.

SP

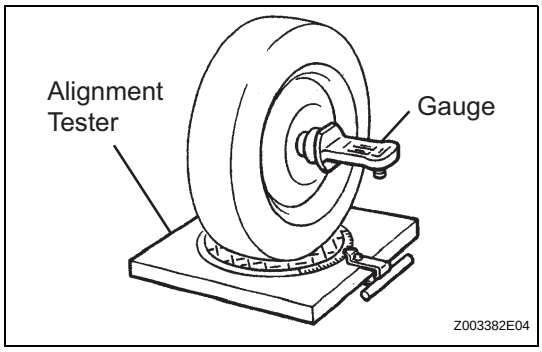

6. INSPECT CAMBER, CASTER AND STEERING AXIS INCLINATION

(a) Put the front wheel on the center of the alignment tester.

(b) Remove the wheel cap.

(c) Set the camber-caster-steering axis inclination gauge at the center of the axle hub or drive shaft.

(d) Inspect the camber, caster and steering axis inclination.
Camber, caster and steering axis inclination: Hatchback

Destination	Camber	Caster	Steering Axis Inclination (Reference)
Except for Rough Road Package	-0°10' +- 45' (-0.17°+- 0.75°)	4°46' +- 45' (4.77°+- 0.75°)	11°18' (11.30°)

Destination	Camber	Caster	Steering Axis Inclination (Reference)
Rough Road Package	0°06' +- 45' (0.10°+- 0.75°)	4°27' +- 45' (4.45°+- 0.75°)	10°47' (10.78°)

Sedan

Destination	Camber	Caster	Steering Axis Inclination (Reference)
Except for Rough Road Package	-0°10' +- 45' (-0.17°+- 0.75°)	4°39' +- 45' (4.65°+- 0.75°)	11°16' (11.27°)
Rough Road Package	0°06' +- 45' (0.10°+- 0.75°)	4°23' +- 45' (4.38°+- 0.75°)	10°47' (10.78°)

NOTICE:
- **Perform the inspection while the vehicle is empty (without a spare tire or tools on board).**
- **The tolerance for the difference between the left and right wheels is 30' (0.5°) or less for both the camber and caster.**

(e) Remove the camber-caster-steering axis inclination gauge and attachment.

(f) Install the wheel cap.
If the caster and steering axis inclination are not within the specified values after the camber has been correctly adjusted, recheck the suspension parts for damage and wear.

7. ADJUST CAMBER

NOTICE:
Inspect the toe-in after the camber has been adjusted.

(a) Remove the front wheel.

(b) w/ ABS:
(1) Remove the bolt and separate the speed sensor and flexible hose.

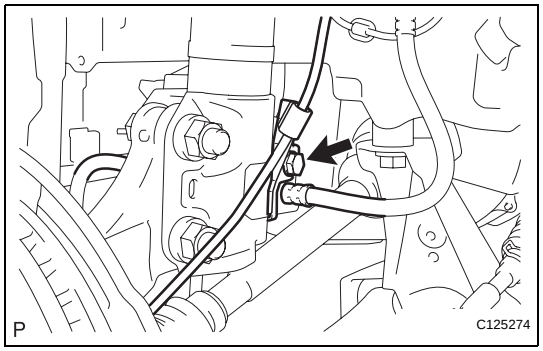

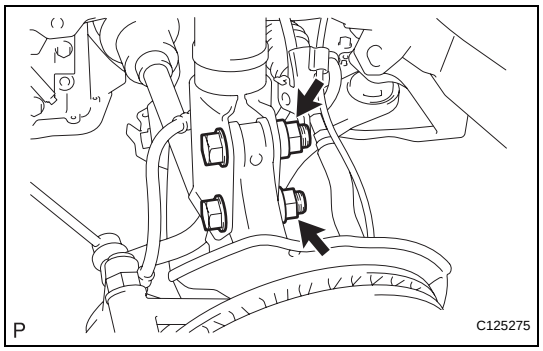

(c) Remove the 2 nuts on the lower side of the shock absorber.
HINT:
Keep the bolt from rotating while loosening and removing the nuts.

(d) Clean the installation surfaces of the shock absorber and steering knuckle.

(e) Provisionally install the 2 nuts (Step A).

SP

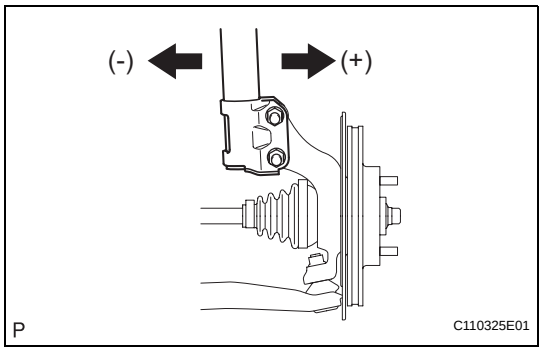

(f) Fully push or pull the axle hub in the direction of the required adjustment (Step B).

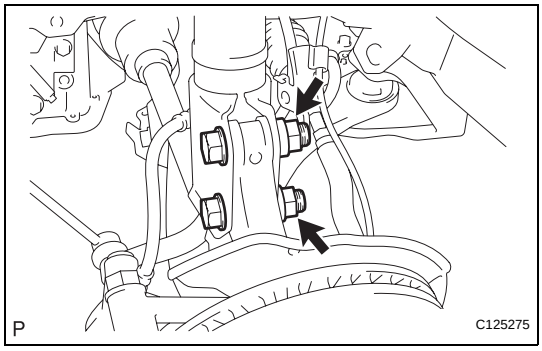

(g) Tighten the 2 nuts.
Torque: 164 N*m (1,672 kgf*cm, 121 ft.*lbf)
HINT:
Keep the bolt from rotating while loosening and removing the nuts.

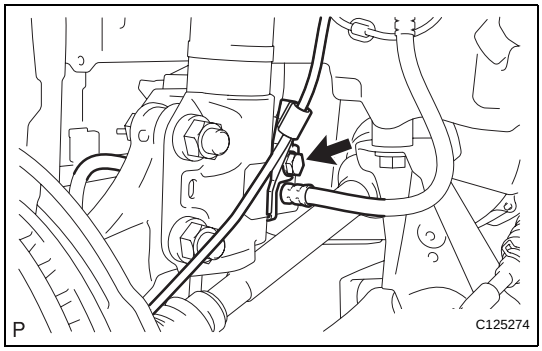

(h) w/ ABS:
(1) Install the flexible hose and speed sensor with the bolt.
Torque: 29 N*m (300 kgf*cm, 22 ft.*lbf)
NOTICE:
Install the flexible hose and speed sensor without twisting them.

(i) Install the front wheel.
Torque: 103 N*m (1,050 kgf*cm, 76 ft.*lbf)

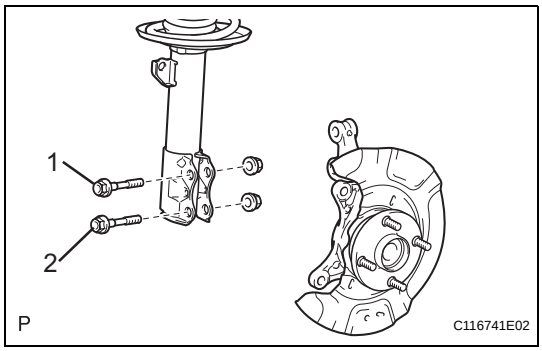

(j) Check the camber.
If the measured value is not within the specification, calculate the required adjustment amount using the formula below.
(Camber adjustment amount) = Center of specified range - Measured value
Check the combination of installed bolts. Select appropriate bolts from the table below to adjust the camber to within the specified range.
HINT:
Try to adjust the camber to the center of the specified range.

Move axle toward (+) in step (B)	Refer to table (1) (Move axle toward positive side)
Move axle toward (-) in step (B)	Refer to table (2) (Move axle toward negative side)

(k) Table (1) (Move the axle toward the positive side).

Table (1) (Move the axle toward the positive side)

Installed Bolt / Adjusting Value	1	90109-15001	90109-15001	90109-15001	90109-15001	90109-15002	90109-15003	90109-15004
	2	90109-15001	90109-15002	90109-15003	90109-15004	90109-15004	90109-15004	90109-15004
-1° 30' to -1° 15'								G
-1° 15' to -1° 00'							G	A
-1° 00' to -0° 45'						G	A	B
-0° 45' to -0° 30'					G	A	B	C
-0° 30' to -0° 15'				G	A	B	C	D
-0° 15' to 0°			G	A	B	C	D	E
0° to 0° 15'		A	B	C	D	E	F	
0° 15' to 0° 30'		B	C	D	E	F		
0° 30' to 0° 45'		C	D	E	F			
0° 45' to 1° 00'		D	E	F				
1° 00' to 1° 15'		E	F					
1° 15' to 1° 30'		F						

Selected Bolt Combination

	A	B	C	D	E	F	G
1	90109-15001	90109-15001	90109-15001	90109-15002	90109-15003	90109-15004	90109-15001
2	90109-15002	90109-15003	90109-15004	90109-15004	90109-15004	90109-15004	90109-15001

P

C111317E07

SP

(l) Table (2) (Move the axle toward the negative side).

Table (2) (Move the axle toward the negative side)

Installed Bolt / Adjusting Value	1	2
	90109-15001	90109-15001
	90109-15001	90109-15002
	90109-15001	90109-15003
	90109-15001	90109-15004
	90109-15002	90109-15004
	90109-15003	90109-15004
	90109-15004	90109-15004
-1° 30’ to -1° 15’	F	
-1° 15’ to -1° 00’	E	F
-1° 00’ to -0° 45’	D	E
-0° 45’ to -0° 30’	C	D
-0° 30’ to -0° 15’	B	C
-0° 15’ to 0°	A	B
0° to 0°15’		G
0° 15’ to 0° 30’		
0° 30’ to 0° 45’		
0° 45’ to 1° 00’		
1° 00’ to 1° 15’		
1° 15’ to 1° 30’		

	1	2
-1° 30’ to -1° 15’		
-1° 15’ to -1° 00’		
-1° 00’ to -0° 45’		
-0° 45’ to -0° 30’		
-0° 30’ to -0° 15’		
-0° 15’ to 0°		
0° to 0°15’	G	
0° 15’ to 0° 30’	G	
0° 30’ to 0° 45’	G	
0° 45’ to 1° 00’	G	
1° 00’ to 1° 15’	G	
1° 15’ to 1° 30’	G	

Selected Bolt Combination

	A	B	C	D	E	F	G
1	90109-15001	90109-15001	90109-15001	90109-15002	90109-15003	90109-15004	90109-15001
2	90109-15002	90109-15003	90109-15004	90109-15004	90109-15004	90109-15004	90109-15001

P

C111317E08

The body and suspension may be damaged if the camber is not correctly adjusted in accordance with the above table.

NOTICE:

Replace the nut with a new one when replacing the bolt.

SP

(m) Repeat the steps mentioned above. At step (A), replace 1or 2 selected bolts.
HINT:
Replace one bolt at a time when replacing 2 bolts.

REAR WHEEL ALIGNMENT

INSPECTION

1. **INSPECT TIRES (See page TW-1)**
2. **MEASURE VEHICLE HEIGHT (See page SP-2)**
3. **INSPECT TOE-IN**
   Toe-in:
   Hatchback

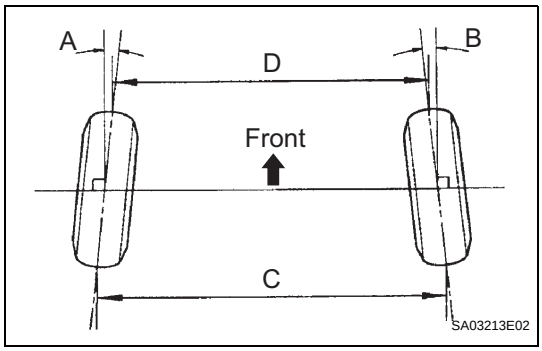

Destination	Tire Size	A+B	C-D
Except for Rough Road Package	175/65R14	0°17' +- 0°20' (0.28°+- 0.33°)	2.8 +- 3.0 mm (0.11 +- 0.12 in.)
	185/60R15	0°17' +- 0°20' (0.28°+- 0.33°)	2.9 +- 3.0 mm (0.11 +- 0.12 in.)
Rough Road Package	175/65R14	0°13' +- 0°20' (0.22°+- 0.33°)	2.2 +- 3.0 mm (0.09 +- 0.12 in.)
	185/60R15	0°13' +- 0°20' (0.22°+- 0.33°)	2.2 +- 3.0 mm (0.09 +- 0.12 in.)

Sedan

Destination	Tire Size	A+B	C-D
Except for Rough Road Package	175/65R14	0°17' +- 0°20' (0.28°+- 0.33°)	2.8 +- 3.0 mm (0.11 +- 0.12 in.)
	185/60R15	0°17' +- 0°20' (0.28°+- 0.33°)	2.9 +- 3.0 mm (0.11 +- 0.12 in.)
Rough Road Package	175/65R14	0°13' +- 0°20' (0.22°+- 0.33°)	2.1 +- 3.0 mm (0.08 +- 0.12 in.)
	185/60R15	0°13' +- 0°20' (0.22°+- 0.33°)	2.2 +- 3.0 mm (0.09 +- 0.12 in.)

HINT:
Only measure C-D when A+B can not be measured.

SP

4. **INSPECT CAMBER**
   (a) Install the camber-caster-kingpin gauge and position the rear wheel on the alignment tester.
   (b) Inspect the camber.
   Camber:
   Hatchback

Destination	Camber
Except for Rough Road Package	-0°57' +- 45' (-0.95°+- 0.75°)
Rough Road Package	-0°54' +- 45' (-0.90°+- 0.75°)

Sedan

Destination	Camber
Except for Rough Road Package	**-0°56' +- 45' (-0.93°+- 0.75°)**
Rough Road Package	**-0°54' +- 45' (-0.90°+- 0.75°)**

NOTICE:
The tolerance for the difference between the left and right wheels is 30' (0.5°) or less for both cambers.
If the camber is not within the specified range, inspect the suspension parts and replace them if necessary.

FRONT SHOCK ABSORBER WITH COIL SPRING

COMPONENTS

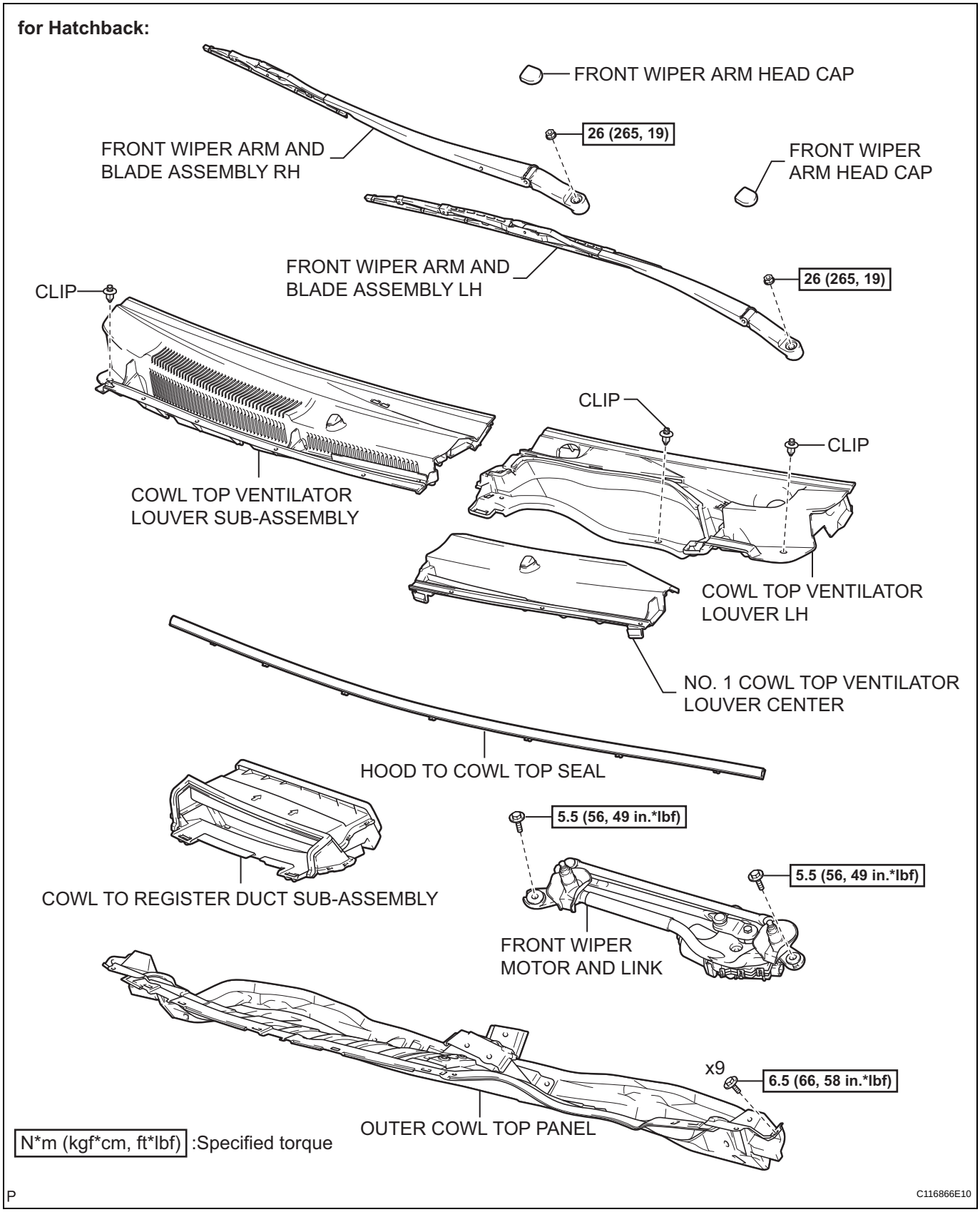

SP

for Sedan:

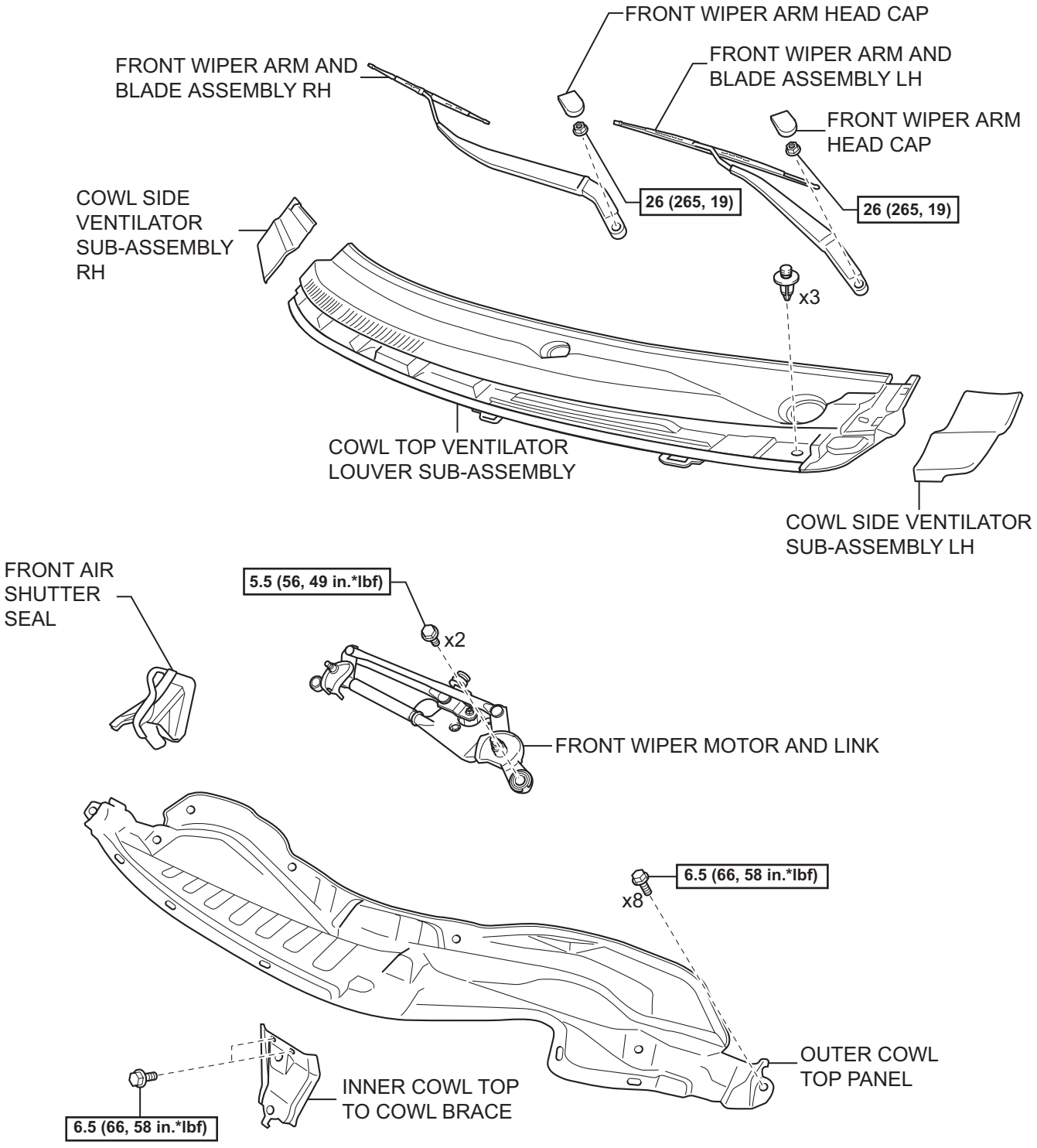

N*m (kgf*cm, ft*lbf) : Specified torque

Y

A133320E07

SP

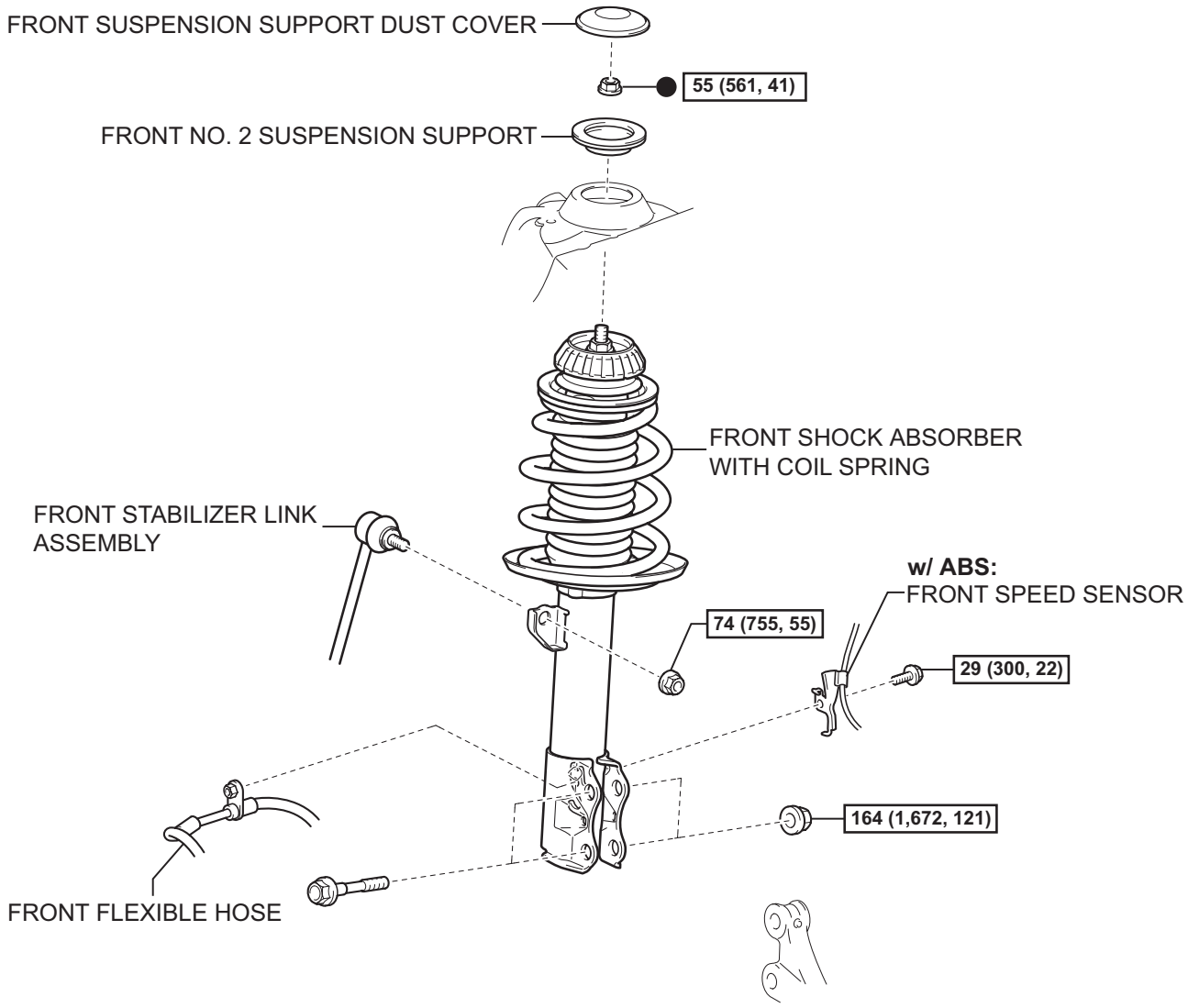

SP

N*m (kgf*cm, ft*lbf) : Specified torque

● Non-reusable part

P

C121847E02

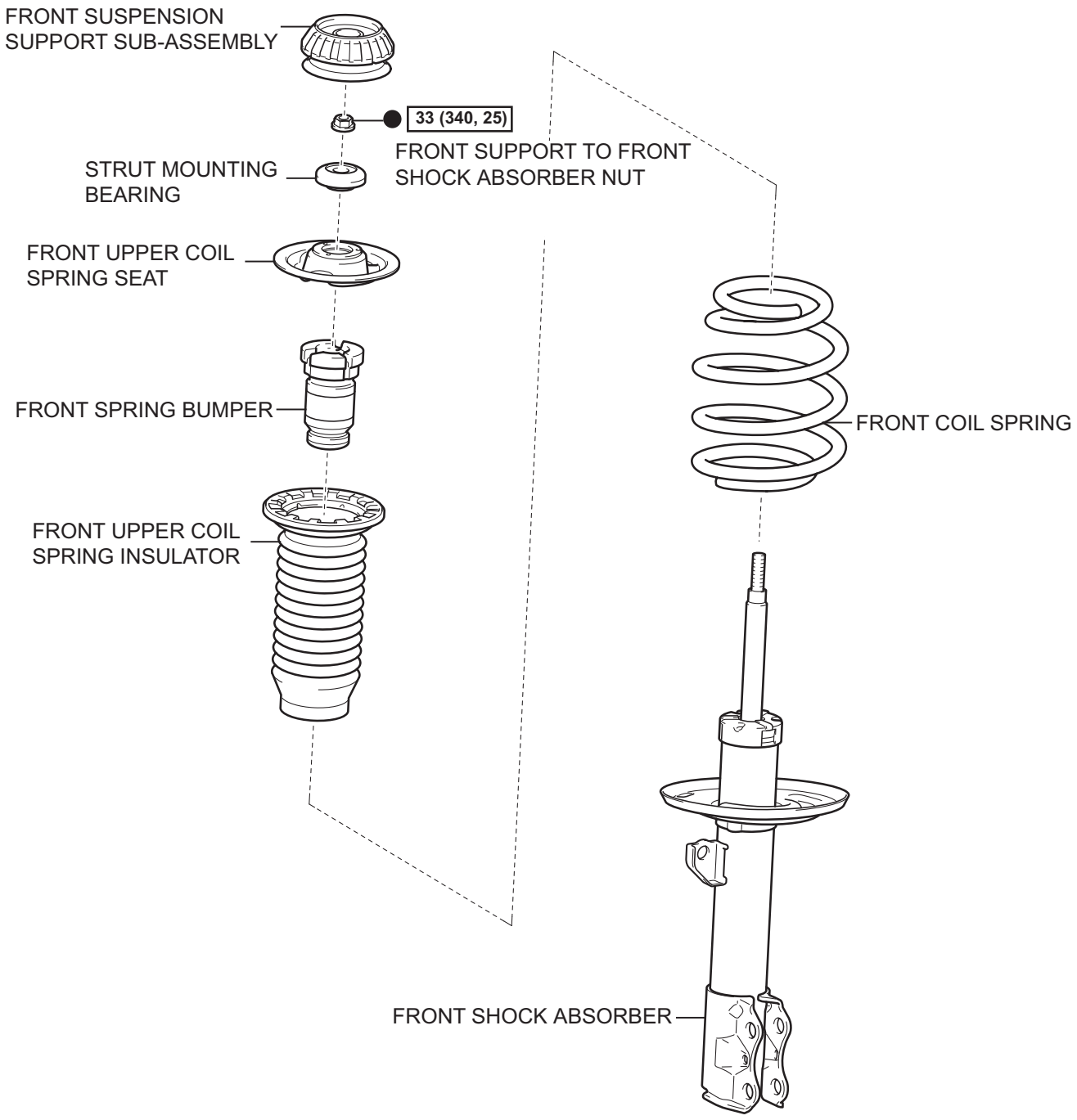

N*m (kgf*cm, ft*lbf) : Specified torque

● Non-reusable part

P

C106043E03

REMOVAL

1. **DISCONNECT CABLE FROM NEGATIVE BATTERY TERMINAL**
2. **REMOVE FRONT WIPER ARM HEAD CAP**
   Hatchback: (See page WW-17)
   Sedan: (See page WW-9)
3. **REMOVE FRONT WIPER ARM AND BLADE ASSEMBLY LH**
   Hatchback: (See page WW-17)
   Sedan: (See page WW-9)
4. **REMOVE FRONT WIPER ARM AND BLADE ASSEMBLY RH**
   Hatchback: (See page WW-17)
   Sedan: (See page WW-9)
5. **REMOVE HOOD TO COWL TOP SEAL (for Hatchback) (See page WW-18)**
6. **REMOVE COWL SIDE VENTILATOR SUB-ASSEMBLY LH (for Sedan) (See page WW-10)**
7. **REMOVE COWL SIDE VENTILATOR SUB-ASSEMBLY RH (for Sedan) (See page WW-10)**
8. **REMOVE COWL TOP VENTILATOR LOUVER SUB-ASSEMBLY**
   Hatchback: (See page WW-18)
   Sedan: (See page WW-10)
9. **REMOVE COWL TOP VENTILATOR LOUVER LH (for Hatchback) (See page WW-18)**
10. **REMOVE FRONT WIPER MOTOR AND LINK**
    Hatchback: (See page WW-19)
    Sedan: (See page WW-10)
11. **REMOVE COWL TO REGISTER DUCT SUB-ASSEMBLY (for Hatchback) (See page EM-122)**
12. **REMOVE FRONT AIR SHUTTER SEAL (for Sedan) (See page EM-123)**
13. **REMOVE OUTER COWL TOP PANEL**
    Hatchback: (See page EM-123)
    Sedan: (See page EM-123)
14. **REMOVE FRONT WHEEL**
15. **SEPARATE FRONT STABILIZER LINK ASSEMBLY**
    (a) Remove the nut and separate the stabilizer link from the shock absorber.
    HINT:
    If the ball joint turns together with the nut, use a socket hexagon wrench 6 to hold the stud.

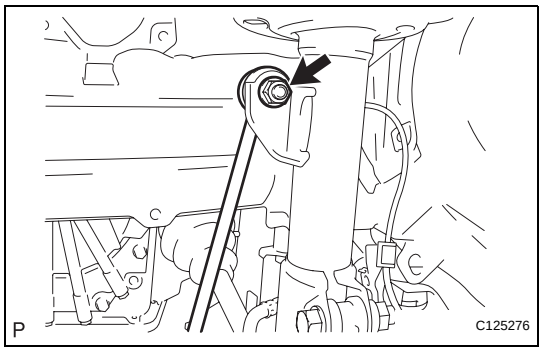

SP

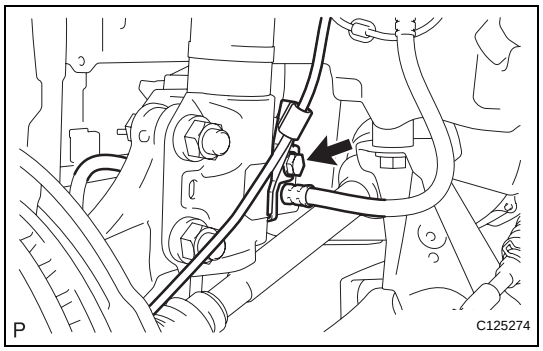

16. SEPARATE FRONT FLEXIBLE HOSE

(a) w/ ABS:

(1) Remove the bolt and separate the speed sensor and flexible hose.

(b) w/o ABS:

(1) Remove the bolt and separate the flexible hose.

17. REMOVE FRONT SUSPENSION SUPPORT DUST COVER

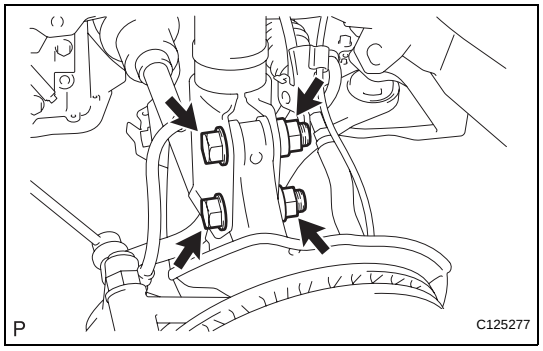

18. REMOVE FRONT SHOCK ABSORBER WITH COIL SPRING

(a) Remove the 2 nuts and 2 bolts and separate the shock absorber with coil spring from the steering knuckle.

HINT:

Keep the bolt from rotating while loosening and removing the nuts.

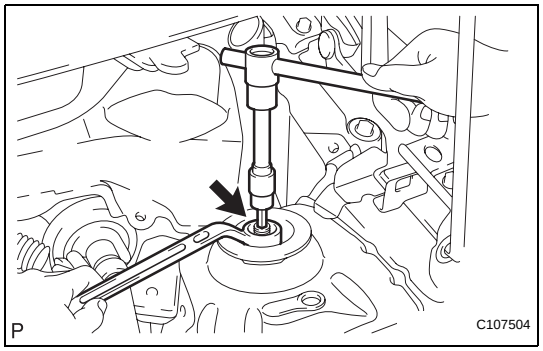

(b) Using a socket hexagon wrench 6, fix the shock absorber rod and remove the nut.

(c) Remove No. 2 suspension support .

(d) Remove the front shock absorber with coil spring from the vehicle.

DISASSEMBLY

1. REMOVE FRONT SUSPENSION SUPPORT SUB-ASSEMBLY

2. REMOVE FRONT SUPPORT TO FRONT SHOCK ABSORBER NUT

(a) Using a socket hexagon wrench 6, fix the shock absorber rod and loosen the nut.

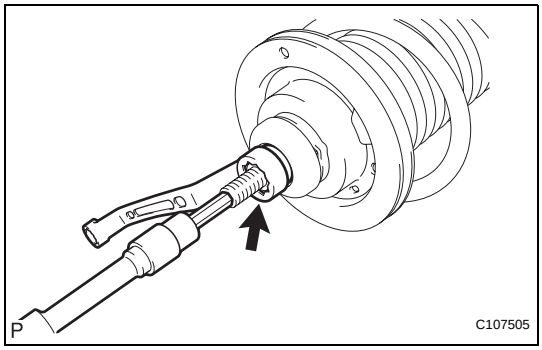

(b) Using SST, compress the coil spring.
SST 09727-30021 (09727-00010, 09727-00021, 09727-00031)
NOTICE:
Do not use an impact wrench. It will damage SST.

(c) Remove the nut.

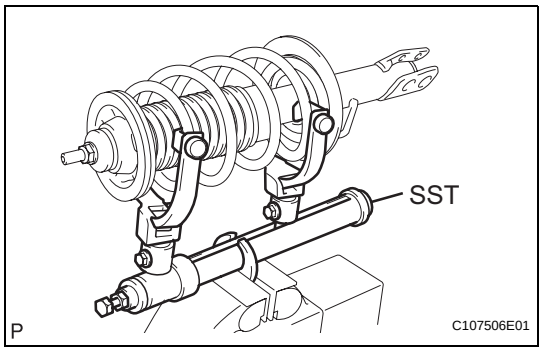

3. REMOVE FRONT UPPER COIL SPRING SEAT

(a) Remove the upper coil spring seat with the strut mounting bearing and spring bumper from the shock absorber.

4. REMOVE FRONT SPRING BUMPER

(a) Remove the spring bumper from the upper coil spring seat.

5. REMOVE FRONT UPPER COIL SPRING INSULATOR

6. REMOVE FRONT COIL SPRING

7. REMOVE STRUT MOUNTING BEARING

(a) Using a brass bar and press, remove the strut mounting bearing from the upper coil spring seat.

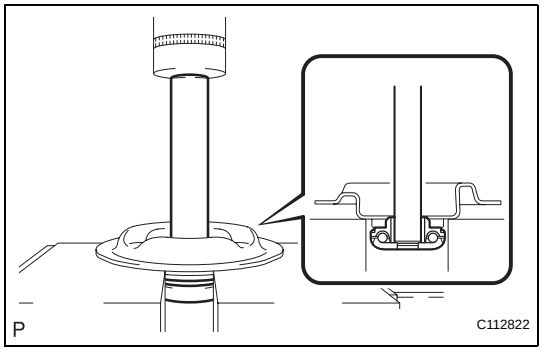

SP

INSPECTION

1. INSPECT FRONT SHOCK ABSORBER

(a) Compress and extend the shock absorber rod and check that there is no abnormal resistance or abnormal sound during the operation.
If there is any abnormality, replace the shock absorber with a new one.
NOTICE:
When disposing of the shock absorber, see DISPOSAL on page SP-21.

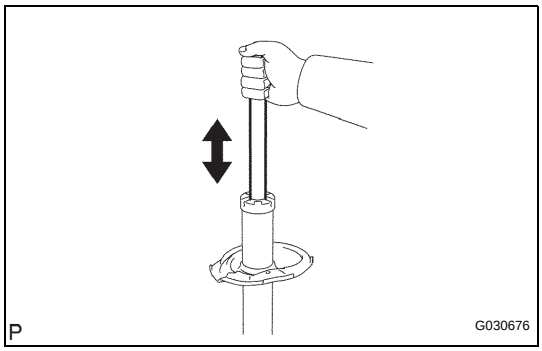

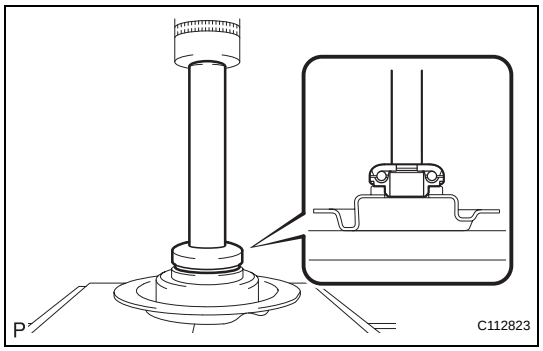

REASSEMBLY

1. INSTALL STRUT MOUNTING BEARING

(a) Using a brass bar and press, install the strut mounting bearing onto the coil spring seat upper.

NOTICE:

The strut mounting bearing must be securely installed.

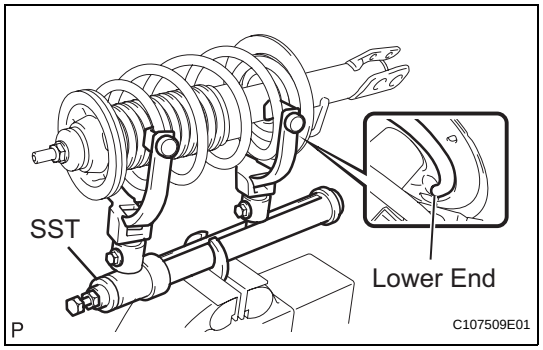

2. INSTALL FRONT COIL SPRING

(a) Using SST, compress the coil spring.

SST 09727-30021 (09727-00010, 09727-00021, 09727-00031)

NOTICE:

Do not use an impact wrench. It will damage SST.

(b) Install the coil spring onto the shock absorber.

NOTICE:

A spring of a smaller diameter should be installed in the upward direction.

HINT:

Fit the lower end of the coil spring into the gap of the absorber lower seat.

3. INSTALL FRONT UPPER COIL SPRING INSULATOR

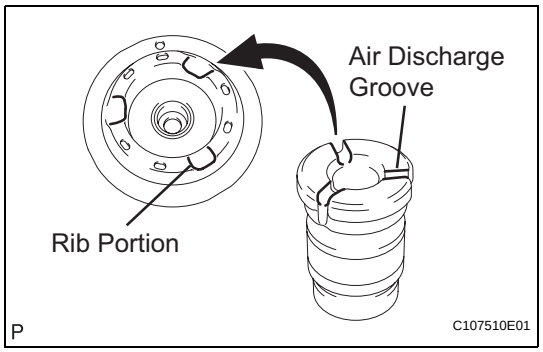

4. INSTALL FRONT SPRING BUMPER

(a) Install the spring bumper onto the upper coil spring seat with the air discharge groove of the spring bumper and the rib portion of the upper coil spring seat aligned.

NOTICE:

Securely insert the spring bumper into the upper coil spring seat.

5. INSTALL FRONT UPPER COIL SPRING SEAT

(a) Install the upper coil spring seat with the strut mounting bearing and spring bumper onto the shock absorber.

6. INSTALL FRONT SUPPORT TO FRONT SHOCK ABSORBER NUT

(a) Provisionally tighten a new nut.

(b) Remove SST from the front coil spring.

NOTICE:

Do not use an impact wrench. It will damage SST.

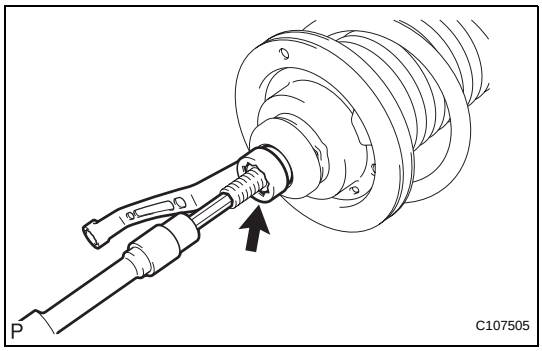

(c) Using a socket hexagon wrench 6, fix the shock absorber rod and tighten the nut.
Torque: 33 N*m (340 kgf*cm, 25 ft.*lbf)

7. INSTALL FRONT SUSPENSION SUPPORT SUB-ASSEMBLY

INSTALLATION

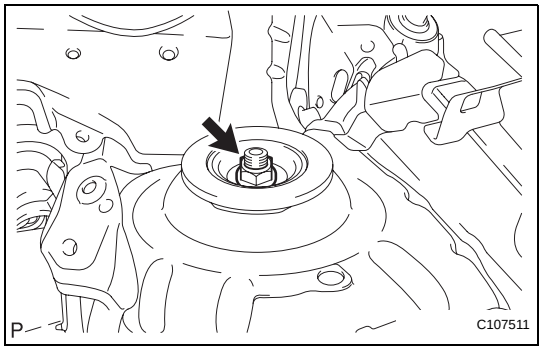

1. TEMPORARILY TIGHTEN FRONT SHOCK ABSORBER WITH COIL SPRING

(a) Provisionally tighten a new nut through No. 2 suspension support.

(b) Install the front shock absorber with coil spring onto the steering knuckle.

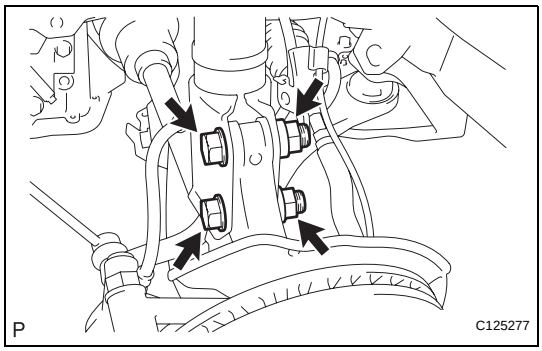

(c) Install the 2 bolts and 2 nuts.
Torque: 164 N*m (1,672 kgf*cm, 121 ft.*lbf)
HINT:
Keep the bolt from rotating while loosening and removing the nuts.

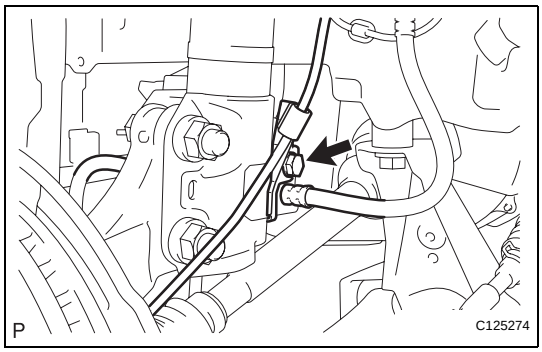

2. INSTALL FRONT FLEXIBLE HOSE

(a) w/ ABS:

(1) Install the flexible hose and speed sensor with the bolt.
Torque: 29 N*m (300 kgf*cm, 22 ft.*lbf)
NOTICE:
Install the flexible hose and speed sensor without twisting them.

(b) w/o ABS:

(1) Install the flexible hose with the bolt.
Torque: 29 N*m (300 kgf*cm, 22 ft.*lbf)
NOTICE:
Install the flexible hose without twisting them.

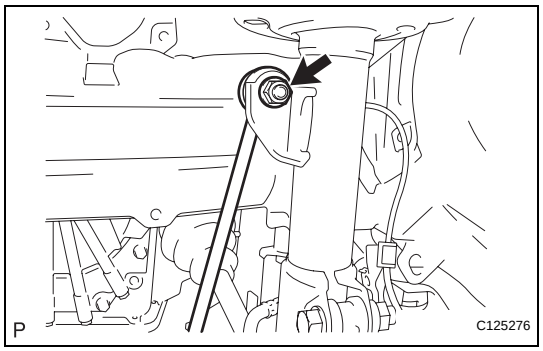

3. INSTALL FRONT STABILIZER LINK ASSEMBLY

(a) Install the stabilizer link with the nut.
Torque: 74 N*m (755 kgf*cm, 55 ft.*lbf)
HINT:
If the ball joint turns together with the nut, use a socket hexagon wrench 6 to hold the stud.

4. INSTALL FRONT WHEEL
Torque: 103 N*m (1,050 kgf*cm, 76 ft.*lbf)

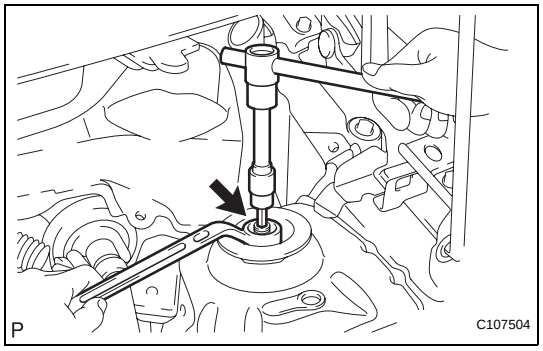

5. FULLY TIGHTEN FRONT SHOCK ABSORBER WITH COIL SPRING

(a) Using a socket hexagon wrench 6, fix the shock absorber rod and tighten the nut.
Torque: 55 N*m (561 kgf*cm, 41 ft.*lbf)

6. INSTALL FRONT SUSPENSION SUPPORT DUST COVER

7. INSTALL OUTER COWL TOP PANEL
Hatchback: (See page EM-146)
Sedan: (See page EM-147)

8. INSTALL COWL TO REGISTER DUCT SUB-ASSEMBLY (for Hatchback) (See page EM-147)

9. INSTALL FRONT AIR SHUTTER SEAL (for Sedan) (See page EM-148)

10. INSTALL FRONT WIPER MOTOR AND LINK
Hatchback: (See page WW-21)
Sedan: (See page WW-12)

11. INSTALL COWL TOP VENTILATOR LOUVER LH (for Hatchback) (See page WW-21)

12. INSTALL COWL TOP VENTILATOR LOUVER SUB-ASSEMBLY
Hatchback: (See page WW-21)
Sedan: (See page WW-12)

13. INSTALL HOOD TO COWL TOP SEAL (for Hatchback) (See page WW-22)

14. INSTALL COWL SIDE VENTILATOR SUB-ASSEMBLY LH (for Sedan) (See page WW-13)

15. INSTALL COWL SIDE VENTILATOR SUB-ASSEMBLY RH (for Sedan) (See page WW-13)

16. INSTALL FRONT WIPER ARM AND BLADE ASSEMBLY LH
Hatchback: (See page WW-22)
Sedan: (See page WW-13)

17. INSTALL FRONT WIPER ARM AND BLADE ASSEMBLY RH
Hatchback: (See page WW-23)
Sedan: (See page WW-14)

18. INSTALL FRONT WIPER ARM HEAD CAP
Hatchback: (See page WW-23)
Sedan: (See page WW-15)

19. CONNECT CABLE TO NEGATIVE BATTERY TERMINAL
Torque: 5.4 N*m (55 kgf*cm, 48 in.*lbf)

20. INSPECT AND ADJUST FRONT WHEEL ALIGNMENT
(See page SP-2)

DISPOSAL

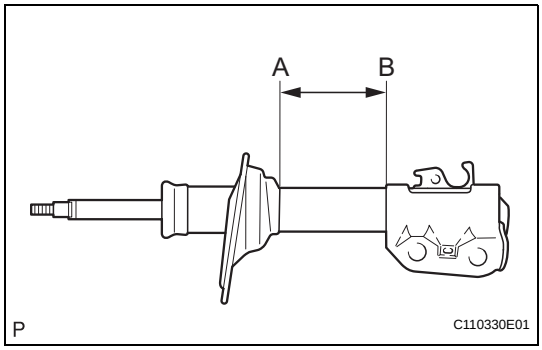

1. DISPOSE OF FRONT SHOCK ABSORBER

(a) Fully extend the shock absorber piston rod, and fix it at an angle in a vise or similar tool.

(b) Using a drill or similar tool, slowly make a hole in the area (A-B) shown in the illustration to discharge the gas inside.

NOTICE:

- **The gas is colorless, odorless and harmless.**
- **Since the discharging gas may cause chips to scatter, cover the drill with a shop rag or piece of cloth when making the hole.**

FRONT LOWER SUSPENSION ARM (for LH Side)

COMPONENTS

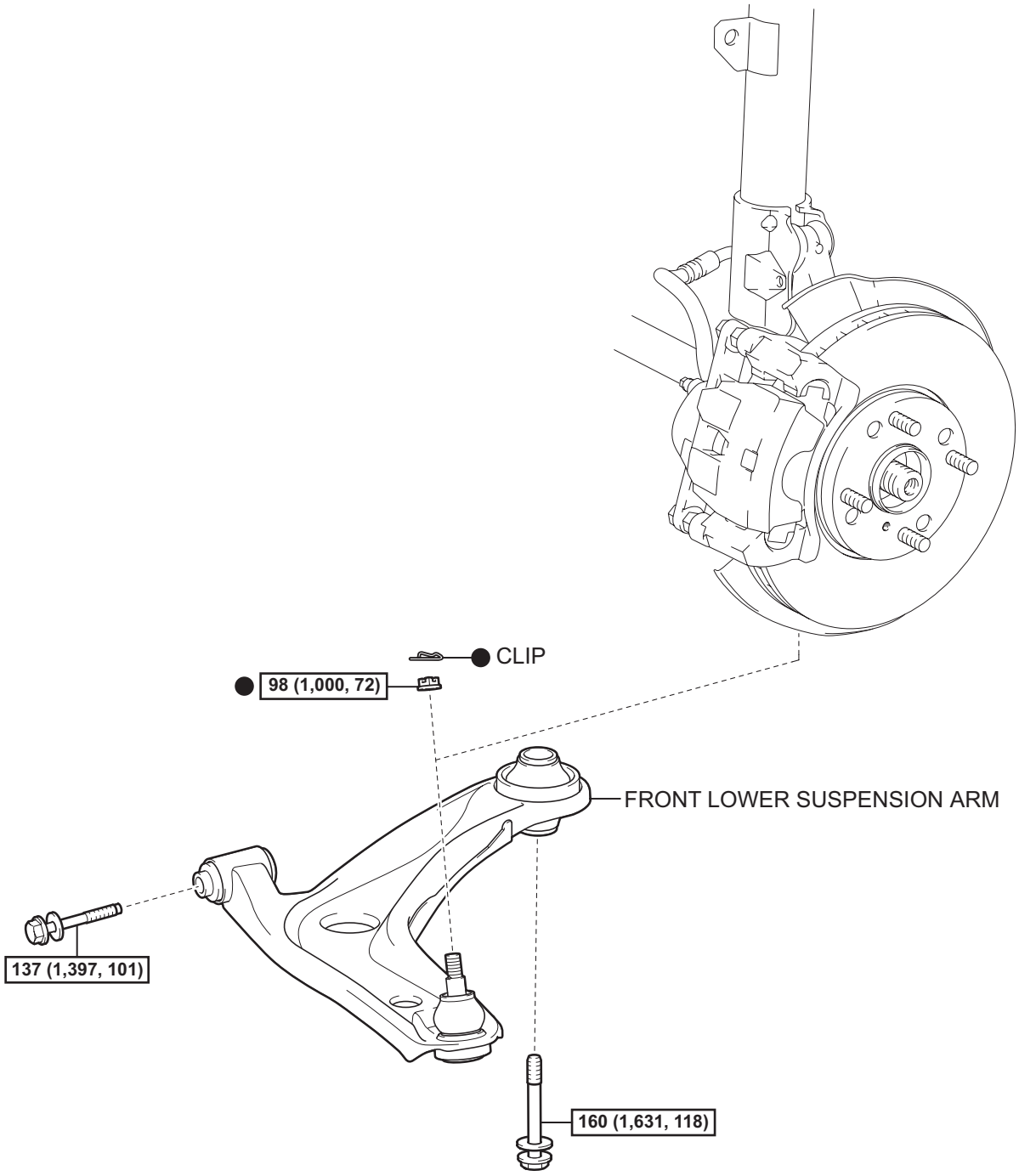

N*m (kgf*cm, ft*lbf) : Specified torque

● Non-reusable part

P

C107512E03

REMOVAL

1. REMOVE FRONT WHEEL

2. REMOVE FRONT LOWER SUSPENSION ARM

(a) Remove the clip and castle nut.

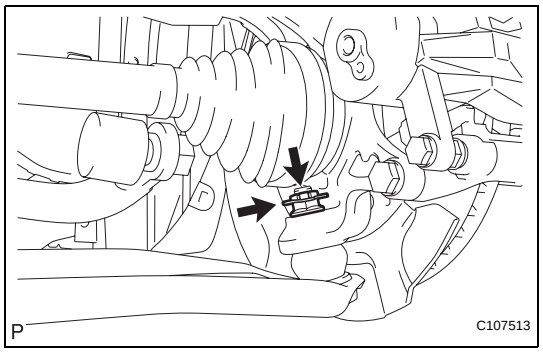

(b) Using SST, separate the lower arm.
SST 09628-00011
NOTICE:
- **Do not damage the lower arm dust cover.**
- **Suspend SST with a piece of string or the equivalent.**

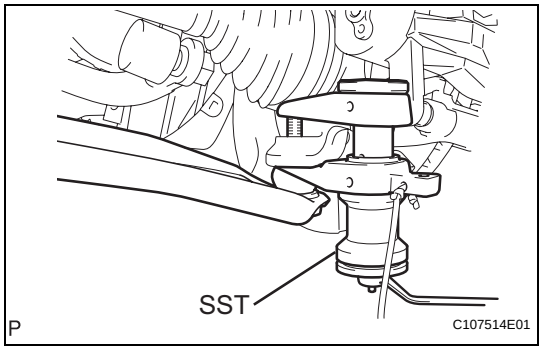

(c) Remove the 2 bolts and lower arm.

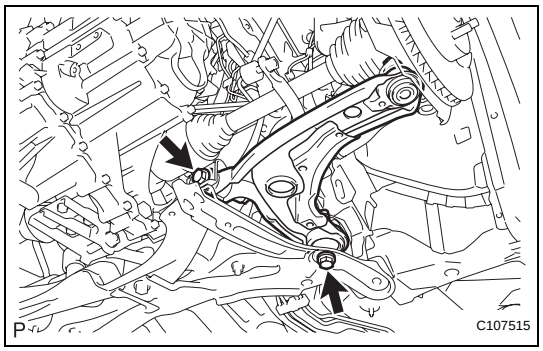

INSPECTION

1. INSPECT FRONT LOWER SUSPENSION ARM

(a) As shown in the illustration, flip the ball joint stud back and forth 5 times before installing the nut.

(b) Using a torque wrench, turn the nut continuously at a rate of 2 to 4 seconds per turn and take the torque reading on the 5th turn.
Torque: 0.78 to 3.43 N*m (8 to 35 kgf*cm, 6.9 to 30 in.*lbf)

(c) Check for any cracks and grease leakage on the ball joint dust cover.

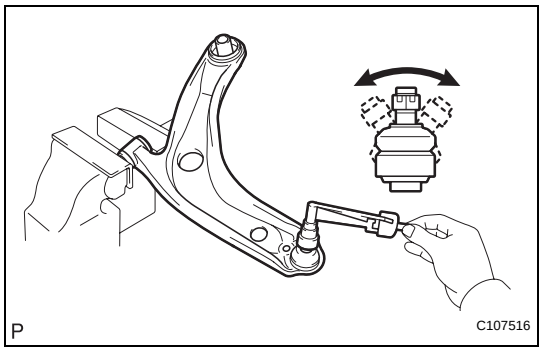

INSTALLATION

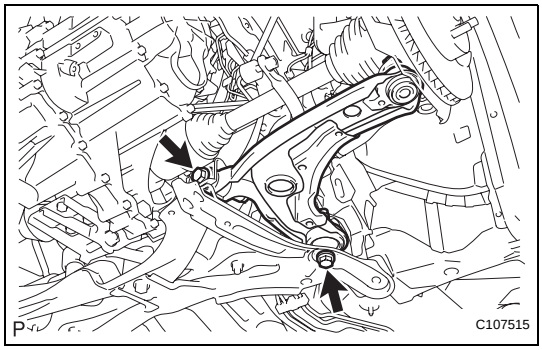

1. TEMPORARILY TIGHTEN FRONT LOWER SUSPENSION ARM

(a) Provisionally tighten the lower arm with the 2 bolts.

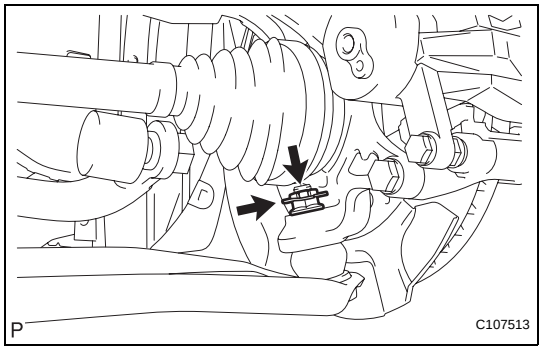

(b) Install the lower arm onto the steering knuckle with a new castle nut.
Torque: 98 N*m (1,000 kgf*cm, 72 ft.*lbf)
NOTICE:
If the holes for the clip are not aligned, tighten the nut by a further turn of up to 60°.

(c) Install a new clip.

2. INSTALL FRONT WHEEL
Torque: 103 N*m (1,050 kgf*cm, 76 ft.*lbf)

3. STABILIZE SUSPENSION

(a) Lower the vehicle from the jack.

(b) Bounce the vehicle up and down several times to stabilize the suspension.

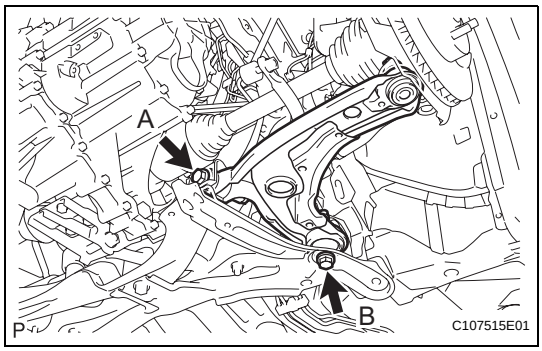

4. FULLY TIGHTEN FRONT LOWER SUSPENSION ARM

(a) Fully tighten the 2 bolts.
Torque: Bolt A
137 N*m (1,397 kgf*cm, 101 ft.*lbf)
Bolt B
160 N*m (1,631 kgf*cm, 118 ft.*lbf)

5. INSPECT AND ADJUST FRONT WHEEL ALIGNMENT
(See page SP-2)

FRONT LOWER SUSPENSION ARM (for RH Side)

COMPONENTS

for Hatchback:

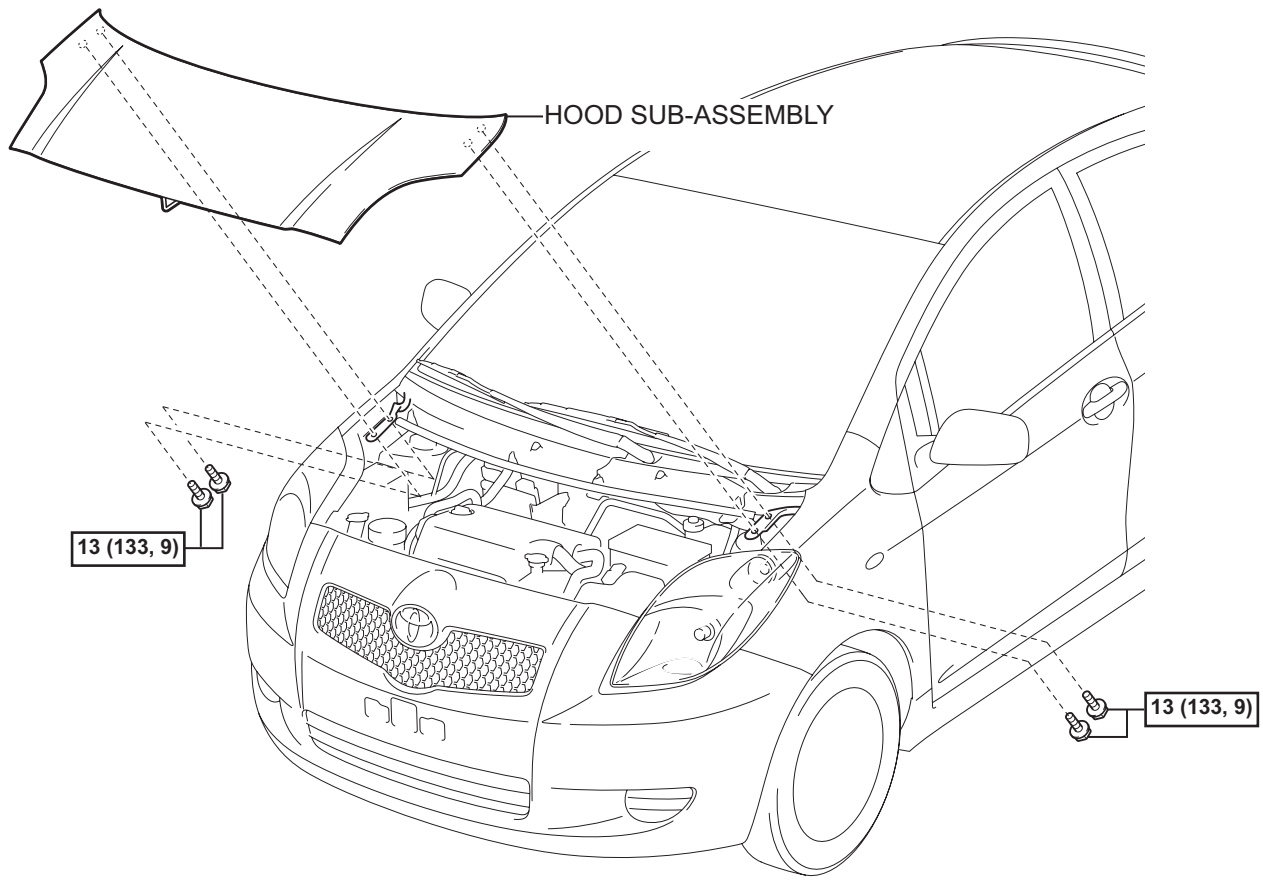

N*m (kgf*cm, ft.*lbf) : Specified torque

P

C117202E02

SP

for Sedan:

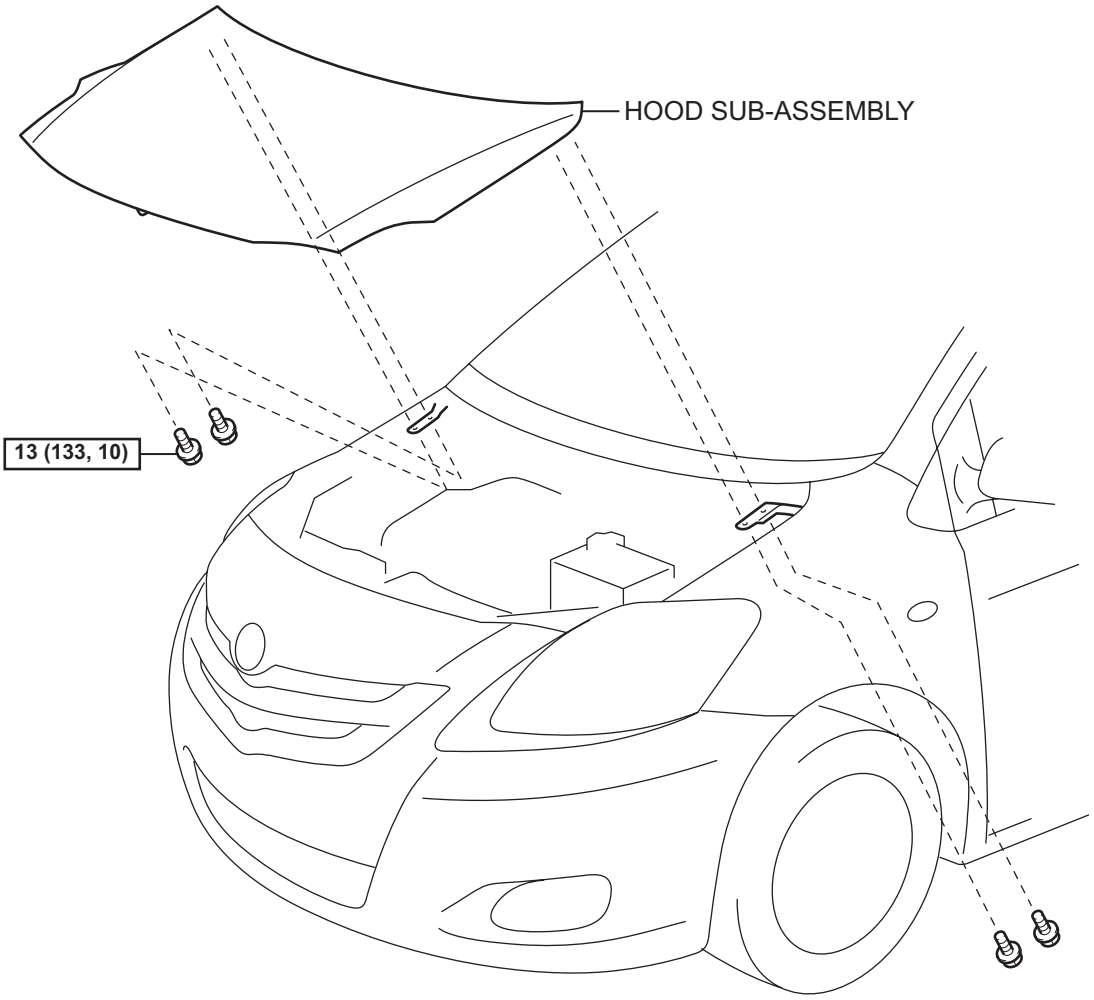

SP

N*m (kgf*cm, ft*lbf) : Specified torque

B135922E02

for Hatchback:

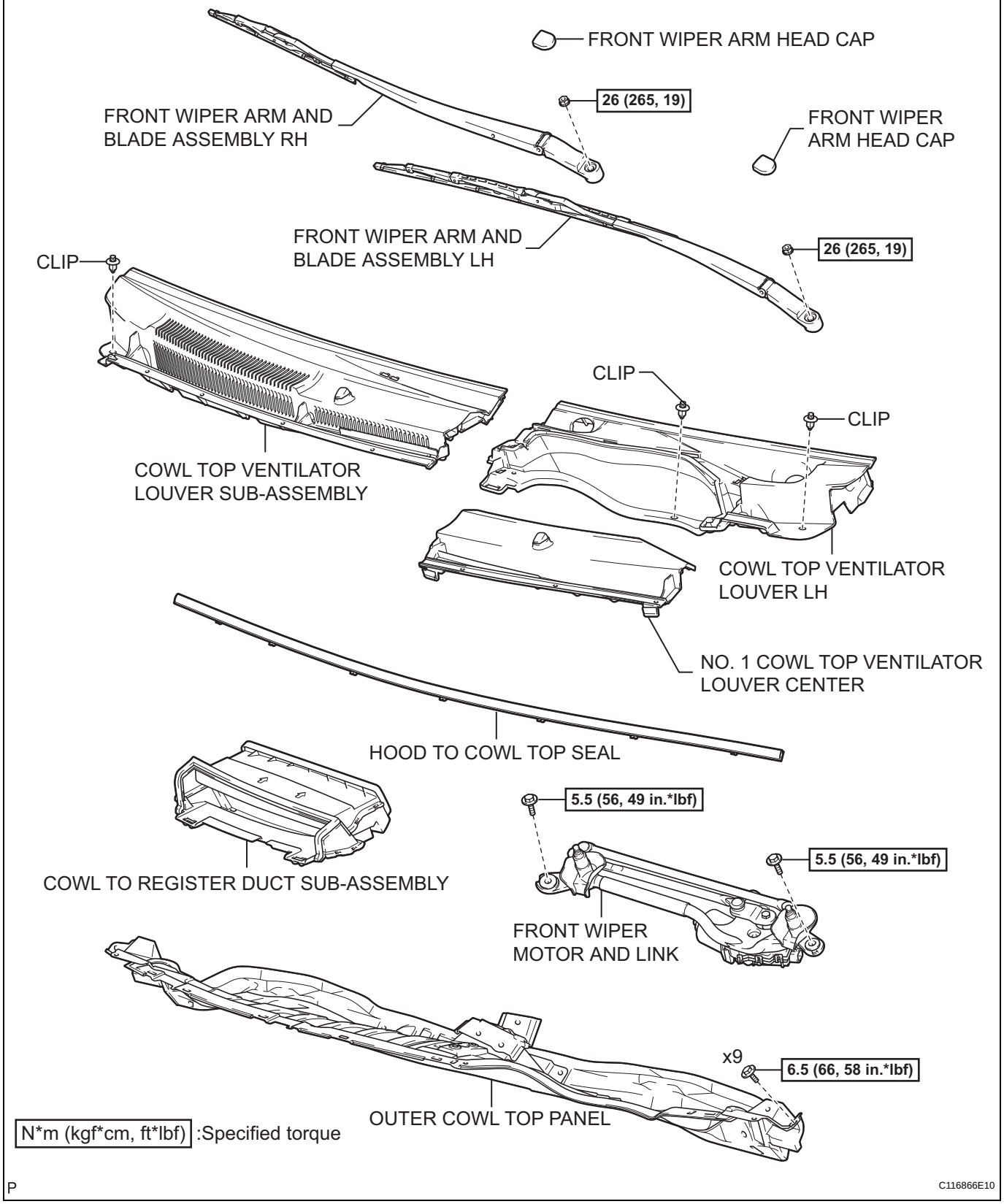

SP

for Sedan:

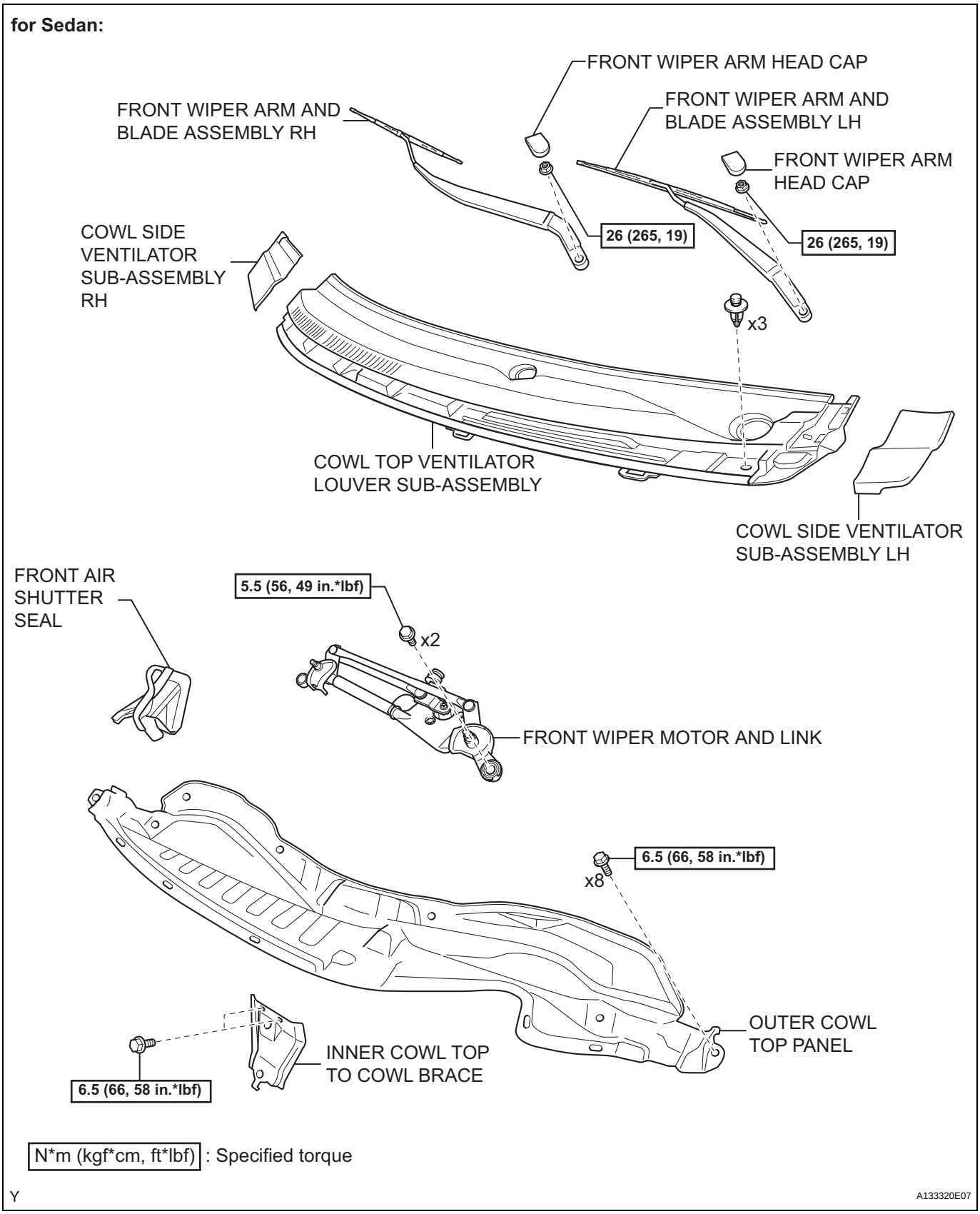

N*m (kgf*cm, ft*lbf) : Specified torque

Y

A133320E07

SP

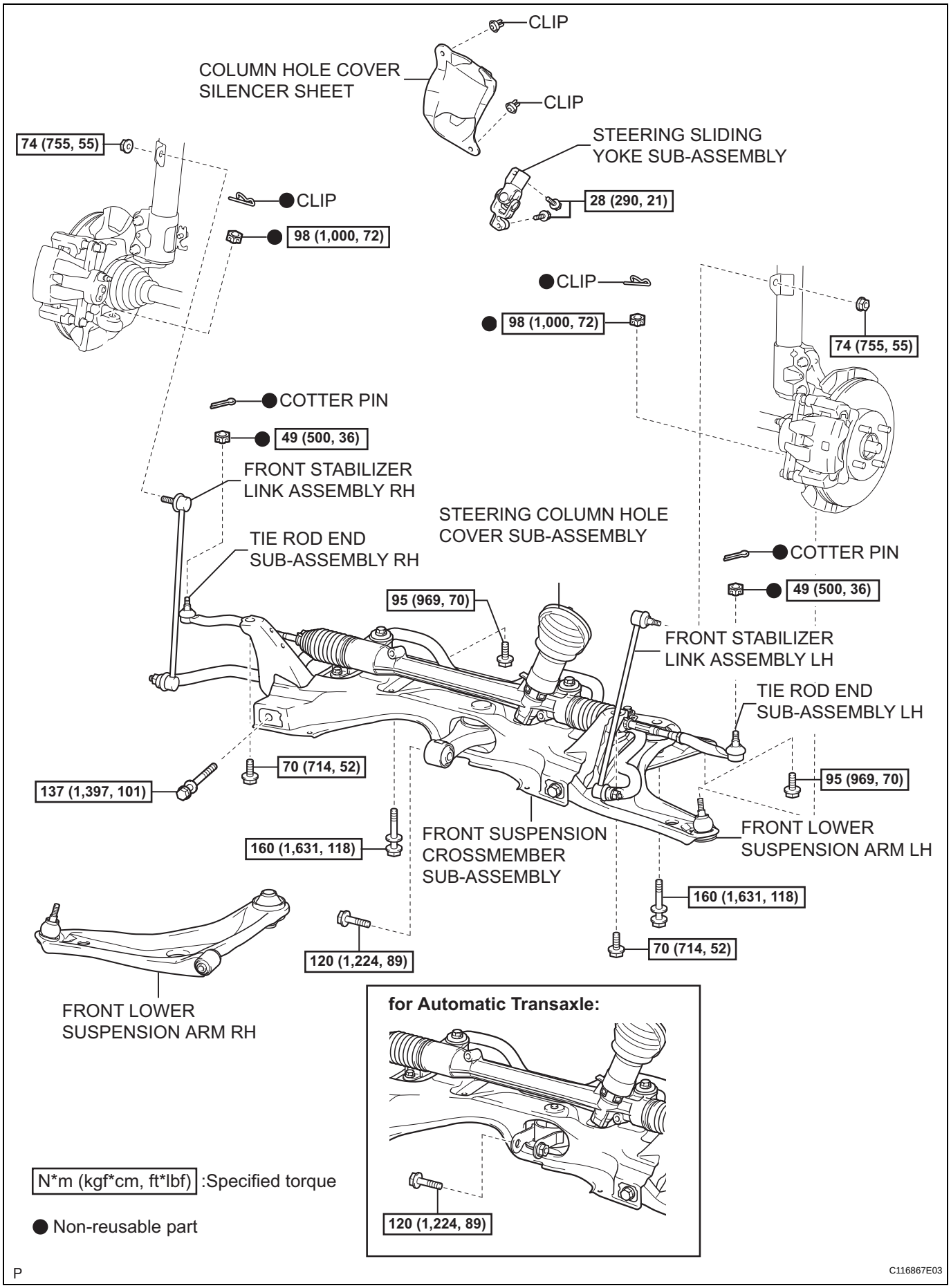
CLIP
COLUMN HOLE COVER SILENCER SHEET
CLIP
STEERING SLIDING YOKE SUB-ASSEMBLY
74 (755, 55)
CLIP
28 (290, 21)
98 (1,000, 72)
CLIP
98 (1,000, 72)
74 (755, 55)
COTTER PIN
49 (500, 36)
FRONT STABILIZER LINK ASSEMBLY RH
STEERING COLUMN HOLE COVER SUB-ASSEMBLY
TIE ROD END SUB-ASSEMBLY RH
COTTER PIN
49 (500, 36)
95 (969, 70)
FRONT STABILIZER LINK ASSEMBLY LH
TIE ROD END SUB-ASSEMBLY LH
70 (714, 52)
137 (1,397, 101)
95 (969, 70)
160 (1,631, 118)
FRONT SUSPENSION CROSSMEMBER SUB-ASSEMBLY
FRONT LOWER SUSPENSION ARM LH
160 (1,631, 118)
120 (1,224, 89)
70 (714, 52)
FRONT LOWER SUSPENSION ARM RH
for Automatic Transaxle:
120 (1,224, 89)
N*m (kgf*cm, ft*lbf) :Specified torque
● Non-reusable part
P
C116867E03

SP

REMOVAL

1. **DISCONNECT CABLE FROM NEGATIVE BATTERY TERMINAL**
2. **REMOVE HOOD SUB-ASSEMBLY**
   Hatchback: (See page PS-74)
   Sedan: (See page PS-63)
3. **REMOVE FRONT WIPER ARM HEAD CAP**
   Hatchback: (See page WW-17)
   Sedan: (See page WW-9)
4. **REMOVE FRONT WIPER ARM AND BLADE ASSEMBLY LH**
   Hatchback: (See page WW-17)
   Sedan: (See page WW-9)
5. **REMOVE FRONT WIPER ARM AND BLADE ASSEMBLY RH**
   Hatchback: (See page WW-17)
   Sedan: (See page WW-9)
6. **REMOVE HOOD TO COWL TOP SEAL (for Hatchback) (See page WW-18)**
7. **REMOVE COWL SIDE VENTILATOR SUB-ASSEMBLY LH (for Sedan) (See page WW-10)**
8. **REMOVE COWL SIDE VENTILATOR SUB-ASSEMBLY RH (for Sedan) (See page WW-10)**
9. **REMOVE COWL TOP VENTILATOR LOUVER SUB-ASSEMBLY**
   Hatchback: (See page WW-18)
   Sedan: (See page WW-10)
10. **REMOVE COWL TOP VENTILATOR LOUVER LH (for Hatchback) (See page WW-18)**
11. **REMOVE FRONT WIPER MOTOR AND LINK**
    Hatchback: (See page WW-19)
    Sedan: (See page WW-10)
12. **REMOVE COWL TO REGISTER DUCT SUB-ASSEMBLY (for Hatchback) (See page EM-122)**
13. **REMOVE FRONT AIR SHUTTER SEAL (for Sedan) (See page EM-123)**
14. **REMOVE OUTER COWL TOP PANEL**
    Hatchback: (See page EM-123)
    Sedan: (See page EM-123)
15. **POSITION WHEELS FACING STRAIGHT AHEAD**
16. **REMOVE FRONT WHEEL**
17. **REMOVE COLUMN HOLE COVER SILENCER SHEET (See page SR-32)**
18. **REMOVE STEERING SLIDING YOKE SUB-ASSEMBLY (See page PS-74)**

19. REMOVE STEERING COLUMN HOLE COVER SUB-ASSEMBLY (See page PS-75)

20. SEPARATE TIE ROD END SUB-ASSEMBLY LH (See page DS-3)

21. SEPARATE TIE ROD END SUB-ASSEMBLY RH

HINT:
The removal procedure for the RH side is the same as that for the LH side.

22. SEPARATE FRONT LOWER SUSPENSION ARM LH (See page DS-4)

23. SEPARATE FRONT LOWER SUSPENSION ARM RH

HINT:
The removal procedure for the RH side is the same as that for the LH side.

24. SEPARATE FRONT STABILIZER LINK ASSEMBLY LH (See page DS-4)

25. SEPARATE FRONT STABILIZER LINK ASSEMBLY RH

HINT:
The removal procedure for the RH side is the same as that for the LH side.

26. SUSPEND ENGINE ASSEMBLY (See page PS-75)

27. REMOVE FRONT SUSPENSION CROSSMEMBER SUB-ASSEMBLY (See page PS-76)

28. REMOVE FRONT LOWER SUSPENSION ARM RH

(a) Remove the bolt and lower arm.

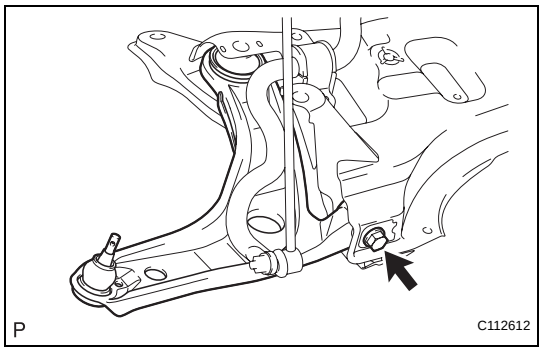

INSPECTION

1. INSPECT FRONT LOWER SUSPENSION ARM

(a) As shown in the illustration, flip the ball joint stud back and forth 5 times before installing the nut.

(b) Using a torque wrench, turn the nut continuously at a rate of 2 to 4 seconds per turn and take the torque reading on the 5th turn.

Torque: 0.78 to 3.43 N*m (8 to 35 kgf*cm, 6.9 to 30 in.*lbf)

(c) Check for any cracks and grease leakage on the ball joint dust cover.

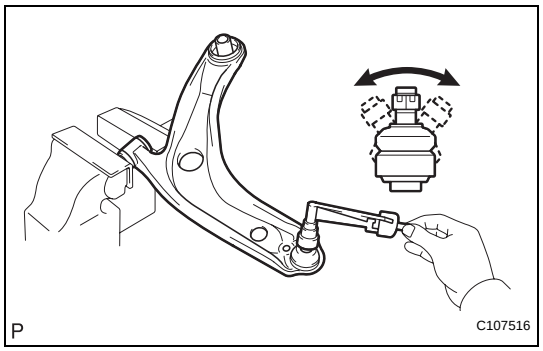

SP

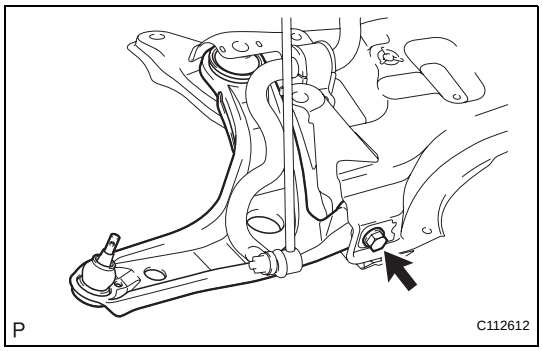

INSTALLATION

1. **TEMPORARILY TIGHTEN FRONT LOWER SUSPENSION ARM RH**
   (a) Install the lower arm onto the crossmember and provisionally tighten the bolt.
2. **INSTALL FRONT SUSPENSION CROSSMEMBER SUB-ASSEMBLY (See page PS-77)**
3. **INSTALL FRONT STABILIZER LINK ASSEMBLY LH (See page DS-14)**
4. **INSTALL FRONT STABILIZER LINK ASSEMBLY RH**
   HINT:
   The installation procedure for the RH side is the same as that for the LH side.
5. **INSTALL FRONT LOWER SUSPENSION ARM LH (See page DS-14)**
6. **INSTALL FRONT LOWER SUSPENSION ARM RH**
   HINT:
   The installation procedure for the RH side is the same as that for the LH side.
7. **INSTALL TIE ROD END SUB-ASSEMBLY LH (See page DS-15)**
8. **INSTALL TIE ROD END SUB-ASSEMBLY RH**
   HINT:
   The installation procedure for the RH side is the same as that for the LH side.
9. **INSTALL STEERING COLUMN HOLE COVER SUB-ASSEMBLY (See page PS-79)**
10. **INSTALL STEERING SLIDING YOKE SUB-ASSEMBLY (See page PS-79)**
11. **INSTALL COLUMN HOLE COVER SILENCER SHEET (See page PS-79)**
12. **INSTALL FRONT WHEEL**
    Torque: 103 N*m (1,050 kgf*cm, 76 ft.*lbf)
13. **POSITION WHEELS FACING STRAIGHT AHEAD**
14. **STABILIZE SUSPENSION**
    (a) Lower the vehicle from the jack.
    (b) Bounce the vehicle up and down several times to stabilize the suspension.

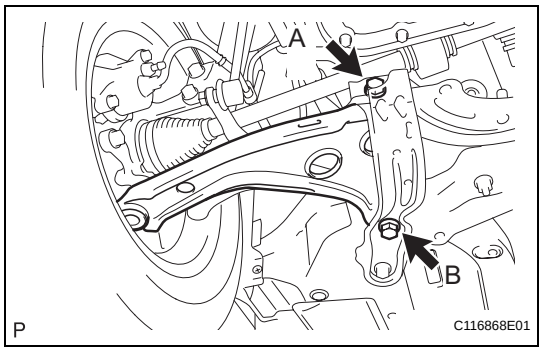

15. FULLY TIGHTEN FRONT LOWER SUSPENSION ARM RH

(a) Fully tighten the 2 bolts.

Torque: Bolt A
137 N*m (1,397 kgf*cm, 101 ft.*lbf)
Bolt B
160 N*m (1,631 kgf*cm, 118 ft.*lbf)

16. INSTALL OUTER COWL TOP PANEL
Hatchback: (See page EM-146)
Sedan: (See page EM-147)

17. INSTALL COWL TO REGISTER DUCT SUB-ASSEMBLY (for Hatchback) (See page EM-147)

18. INSTALL FRONT AIR SHUTTER SEAL (for Sedan) (See page EM-148)

19. INSTALL FRONT WIPER MOTOR AND LINK
Hatchback: (See page WW-21)
Sedan: (See page WW-12)

20. INSTALL COWL TOP VENTILATOR LOUVER LH (for Hatchback) (See page WW-21)

21. INSTALL COWL TOP VENTILATOR LOUVER SUB-ASSEMBLY
Hatchback: (See page WW-21)
Sedan: (See page WW-12)

22. INSTALL HOOD TO COWL TOP SEAL (for Hatchback) (See page WW-22)

23. INSTALL COWL SIDE VENTILATOR SUB-ASSEMBLY LH (for Sedan) (See page WW-13)

24. INSTALL COWL SIDE VENTILATOR SUB-ASSEMBLY RH (for Sedan) (See page WW-13)

25. INSTALL FRONT WIPER ARM AND BLADE ASSEMBLY LH
Hatchback: (See page WW-22)
Sedan: (See page WW-13)

26. INSTALL FRONT WIPER ARM AND BLADE ASSEMBLY RH
Hatchback: (See page WW-23)
Sedan: (See page WW-14)

27. INSTALL FRONT WIPER ARM HEAD CAP
Hatchback: (See page WW-23)
Sedan: (See page WW-15)

28. INSPECT HOOD
Hatchback: (See page ED-3)
Sedan: (See page ED-1)

29. ADJUST HOOD (for Hatchback)
Hatchback: (See page ED-4)
Hatchback: (See page ED-2)

30. **CONNECT CABLE TO NEGATIVE BATTERY TERMINAL**
    Torque: 5.4 N*m (55 kgf*cm, 48 in.*lbf)

31. **INSPECT AND ADJUST FRONT WHEEL ALIGNMENT**
    (See page SP-2)

FRONT STABILIZER BAR

COMPONENTS

for Hatchback:

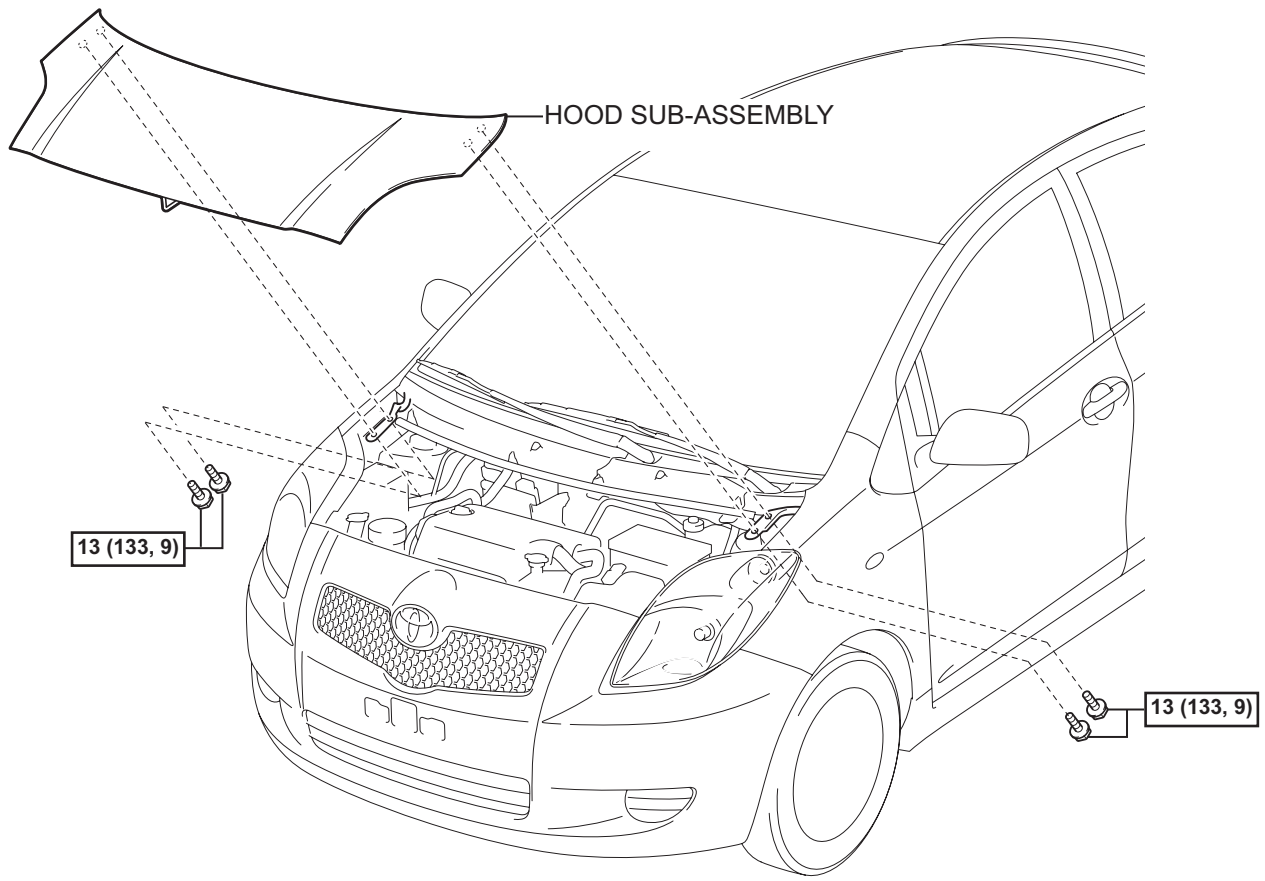

N*m (kgf*cm, ft.*lbf) : Specified torque

P

C117202E02

for Sedan:

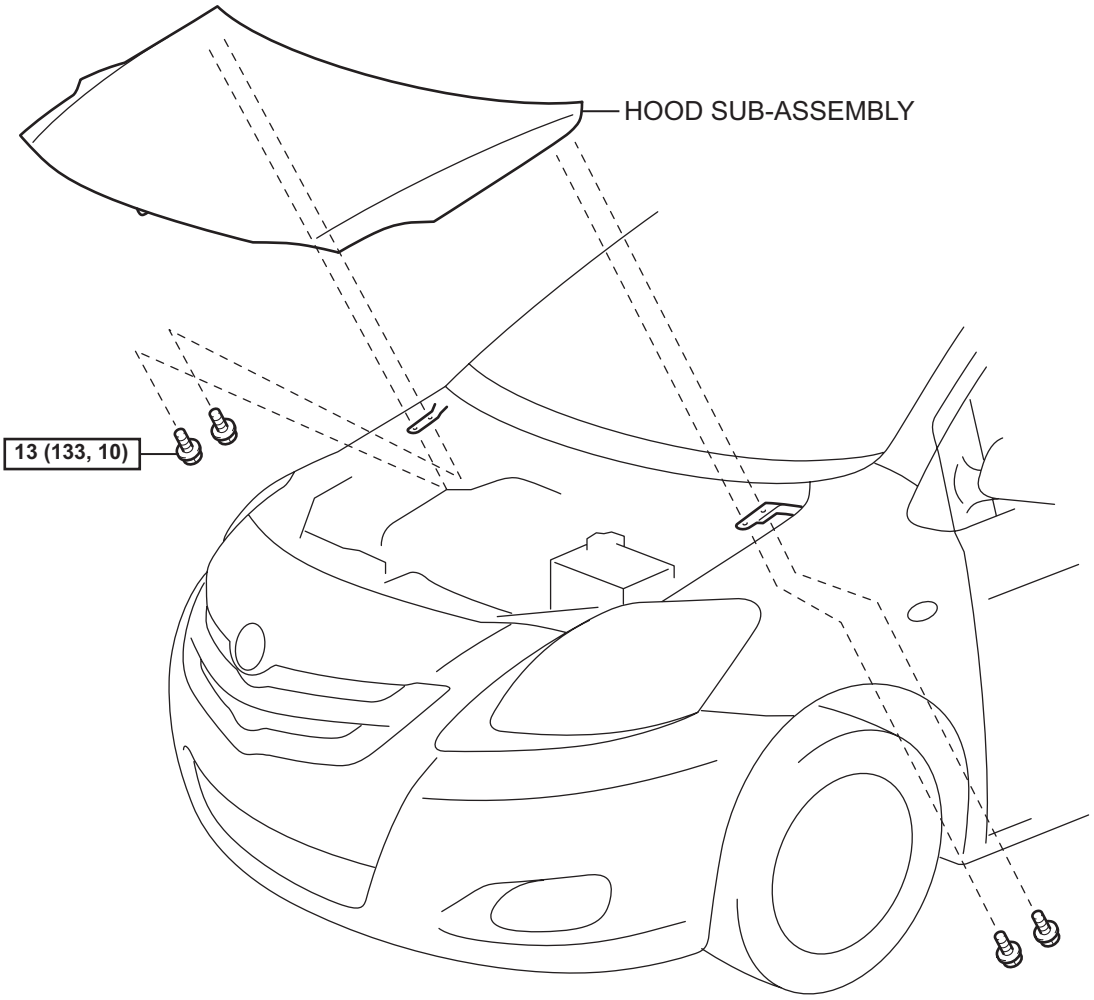

SP

N*m (kgf*cm, ft*lbf) : Specified torque

B135922E02

for Hatchback:

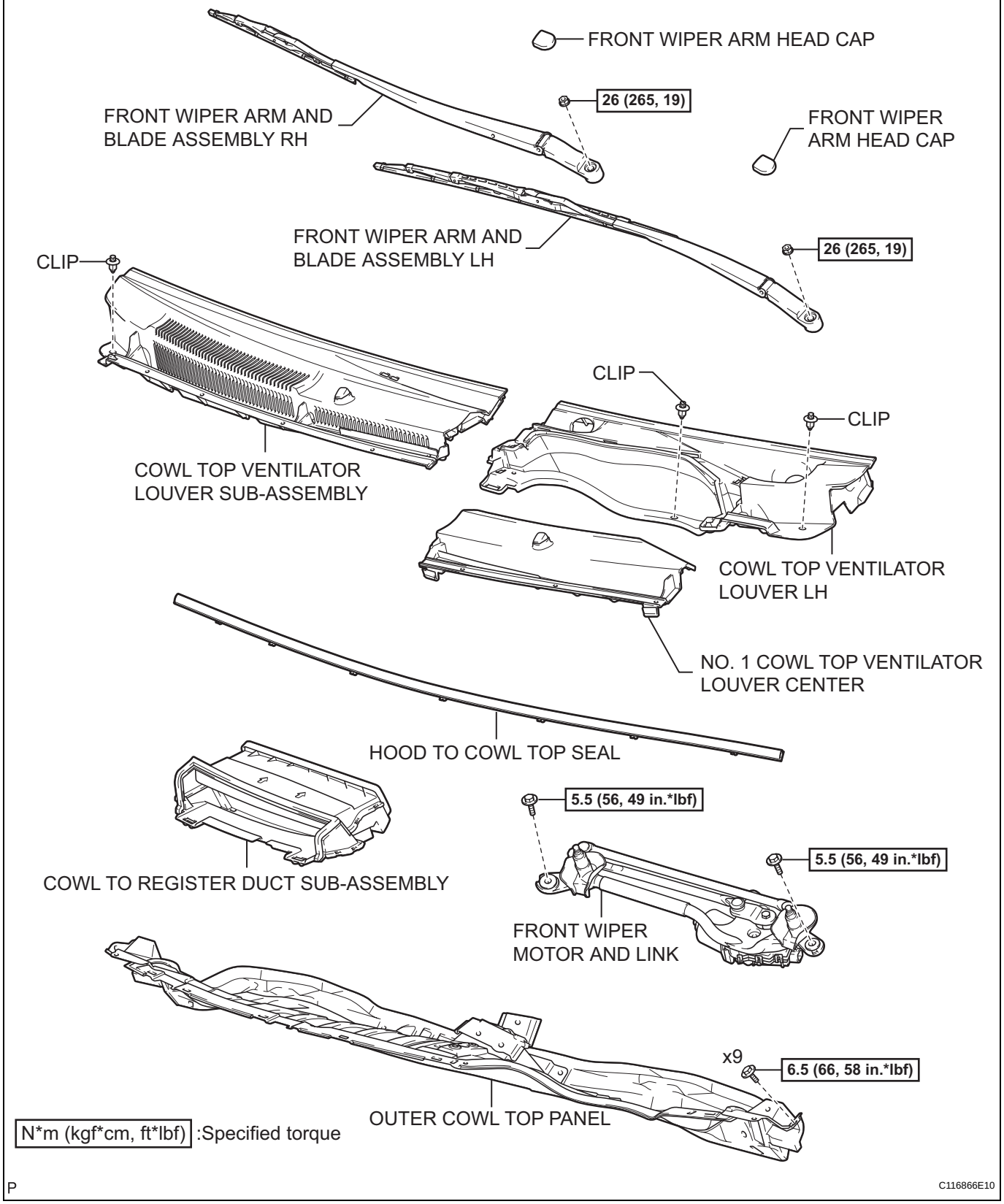

P

C116866E10

for Sedan:

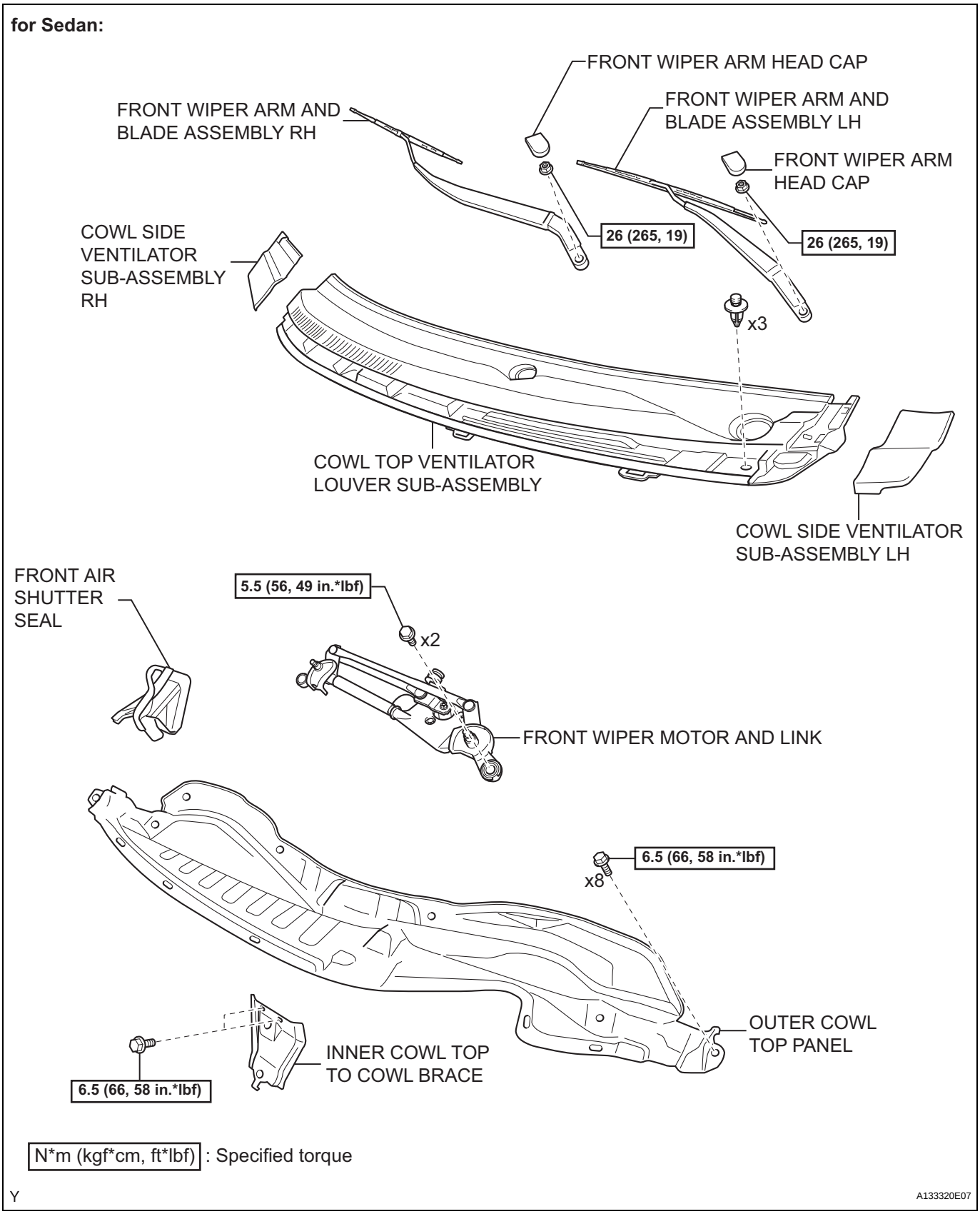

N*m (kgf*cm, ft*lbf) : Specified torque

Y

A133320E07

SP

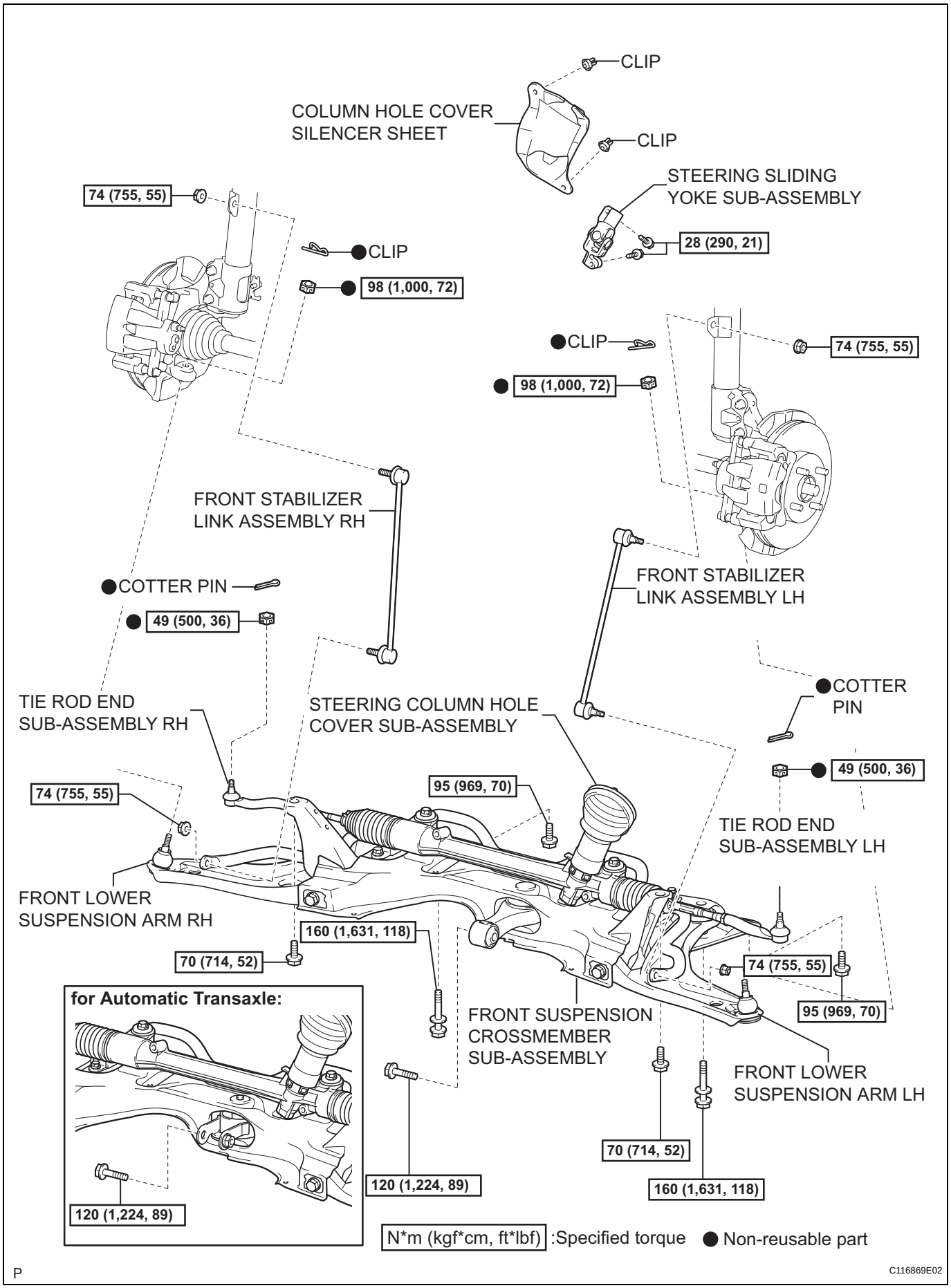
CLIP
COLUMN HOLE COVER SILENCER SHEET
CLIP
STEERING SLIDING YOKE SUB-ASSEMBLY
74 (755, 55)
28 (290, 21)
●CLIP
● 98 (1,000, 72)
●CLIP
74 (755, 55)
● 98 (1,000, 72)
FRONT STABILIZER LINK ASSEMBLY RH
FRONT STABILIZER LINK ASSEMBLY LH
●COTTER PIN
● 49 (500, 36)
TIE ROD END SUB-ASSEMBLY RH
STEERING COLUMN HOLE COVER SUB-ASSEMBLY
●COTTER PIN
● 49 (500, 36)
74 (755, 55)
95 (969, 70)
TIE ROD END SUB-ASSEMBLY LH
FRONT LOWER SUSPENSION ARM RH
160 (1,631, 118)
70 (714, 52)
74 (755, 55)
95 (969, 70)
for Automatic Transaxle:
FRONT SUSPENSION CROSSMEMBER SUB-ASSEMBLY
FRONT LOWER SUSPENSION ARM LH
70 (714, 52)
120 (1,224, 89)
160 (1,631, 118)
120 (1,224, 89)
N*m (kgf*cm, ft*lbf) :Specified torque
● Non-reusable part
P
C116869E02

SP

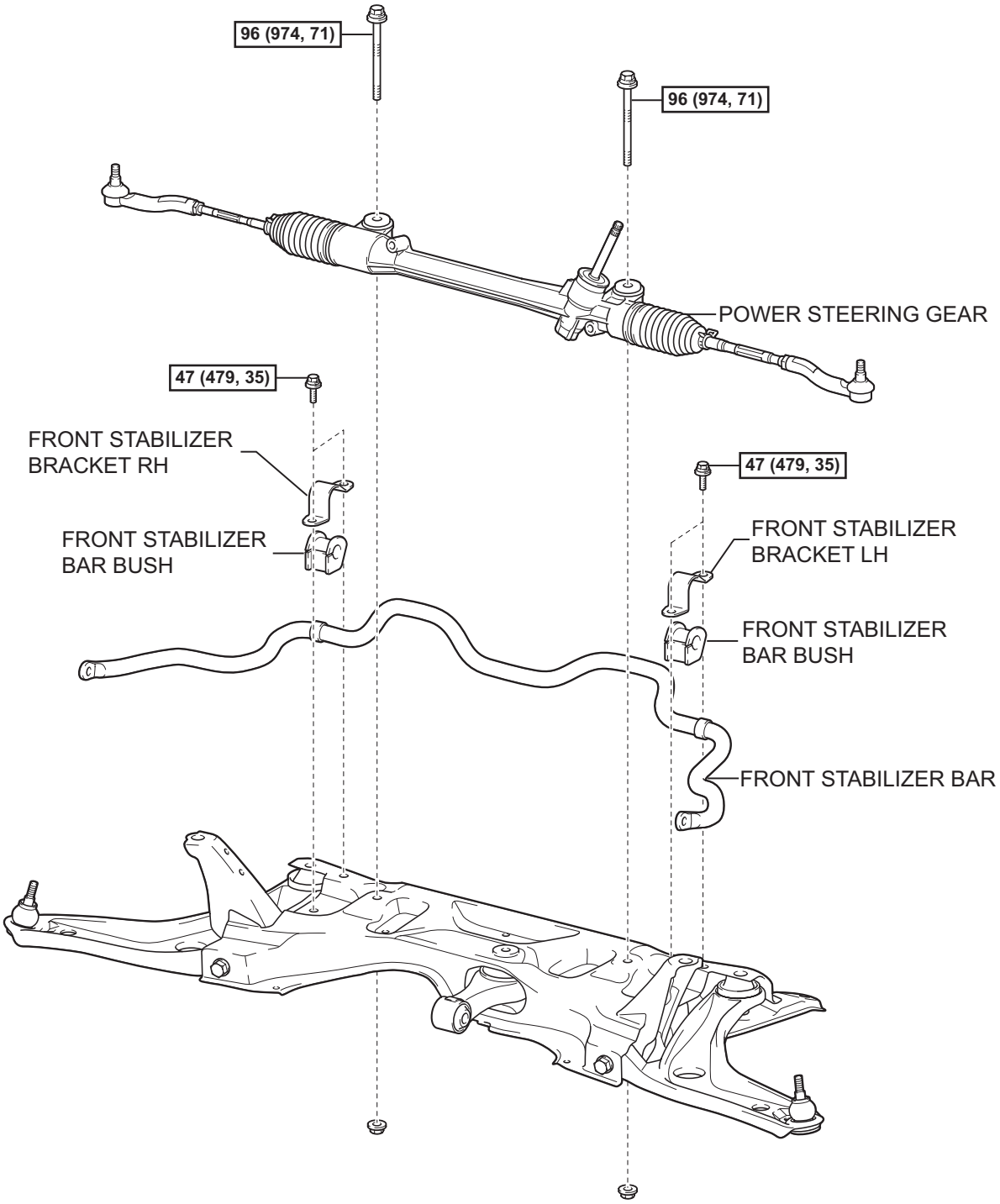

N*m (kgf*cm, ft*lbf) : Specified torque

● Non-reusable part

P

C116870E01

REMOVAL

1. **DISCONNECT CABLE FROM NEGATIVE BATTERY TERMINAL**
2. **REMOVE HOOD SUB-ASSEMBLY**
   Hatchback: (See page PS-74)
   Sedan: (See page PS-63)
3. **REMOVE FRONT WIPER ARM HEAD CAP**
   Hatchback: (See page WW-17)
   Sedan: (See page WW-9)
4. **REMOVE FRONT WIPER ARM AND BLADE ASSEMBLY LH**
   Hatchback: (See page WW-17)
   Sedan: (See page WW-9)
5. **REMOVE FRONT WIPER ARM AND BLADE ASSEMBLY RH**
   Hatchback: (See page WW-17)
   Sedan: (See page WW-9)
6. **REMOVE HOOD TO COWL TOP SEAL (for Hatchback) (See page WW-18)**
7. **REMOVE COWL SIDE VENTILATOR SUB-ASSEMBLY LH (for Sedan) (See page WW-10)**
8. **REMOVE COWL SIDE VENTILATOR SUB-ASSEMBLY RH (for Sedan) (See page WW-10)**
9. **REMOVE COWL TOP VENTILATOR LOUVER SUB-ASSEMBLY**
   Hatchback: (See page WW-18)
   Sedan: (See page WW-10)
10. **REMOVE COWL TOP VENTILATOR LOUVER LH (for Hatchback) (See page WW-18)**
11. **REMOVE FRONT WIPER MOTOR AND LINK**
    Hatchback: (See page WW-19)
    Sedan: (See page WW-10)
12. **REMOVE COWL TO REGISTER DUCT SUB-ASSEMBLY (for Hatchback) (See page EM-122)**
13. **REMOVE FRONT AIR SHUTTER SEAL (for Sedan) (See page EM-123)**
14. **REMOVE OUTER COWL TOP PANEL**
    Hatchback: (See page EM-123)
    Sedan: (See page EM-123)
15. **POSITION WHEELS FACING STRAIGHT AHEAD**
16. **REMOVE FRONT WHEEL**
17. **REMOVE COLUMN HOLE COVER SILENCER SHEET (See page PS-74)**
18. **REMOVE STEERING SLIDING YOKE SUB-ASSEMBLY (See page PS-74)**

19. REMOVE STEERING COLUMN HOLE COVER SUB-ASSEMBLY (See page PS-75)

20. SEPARATE TIE ROD END SUB-ASSEMBLY LH (See page DS-3)

21. SEPARATE TIE ROD END SUB-ASSEMBLY RH
HINT:
The removal procedure for the RH side is the same as that for the LH side.

22. SEPARATE FRONT LOWER SUSPENSION ARM LH (See page DS-4)

23. SEPARATE FRONT LOWER SUSPENSION ARM RH
HINT:
The removal procedure for the RH side is the same as that for the LH side.

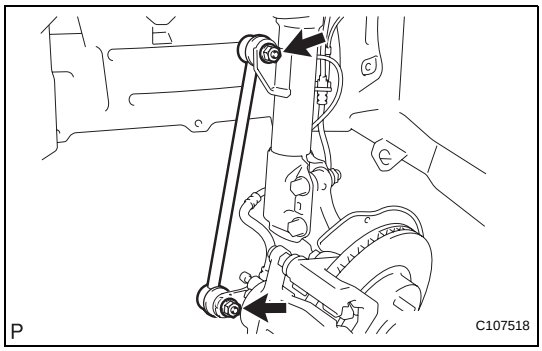

24. REMOVE FRONT STABILIZER LINK ASSEMBLY LH
(a) Remove the 2 nuts and stabilizer link
HINT:
If the ball joint turns together with the nut, use a socket hexagon wrench 6 to hold the stud.

25. REMOVE FRONT STABILIZER LINK ASSEMBLY RH
HINT:
The removal procedure for the RH side is the same as that for the LH side.

26. SUSPEND ENGINE ASSEMBLY (See page PS-75)

27. REMOVE FRONT SUSPENSION CROSSMEMBER SUB-ASSEMBLY (See page PS-76)

28. REMOVE POWER STEERING GEAR (See page PS-76)

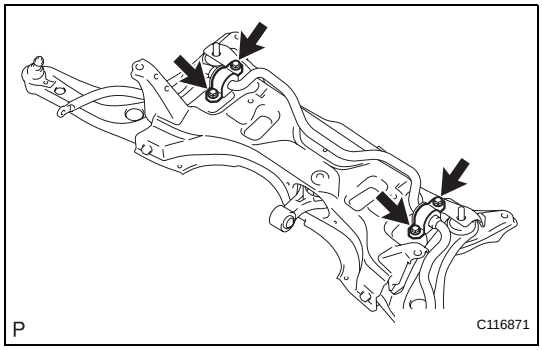

29. REMOVE FRONT STABILIZER BRACKET LH
(a) Remove the 2 bolts and the stabilizer bracket.

30. REMOVE FRONT STABILIZER BRACKET RH
(a) Remove the 2 bolts and the stabilizer bracket.

31. REMOVE FRONT STABILIZER BAR

32. REMOVE FRONT STABILIZER BAR BUSH

SP

INSPECTION

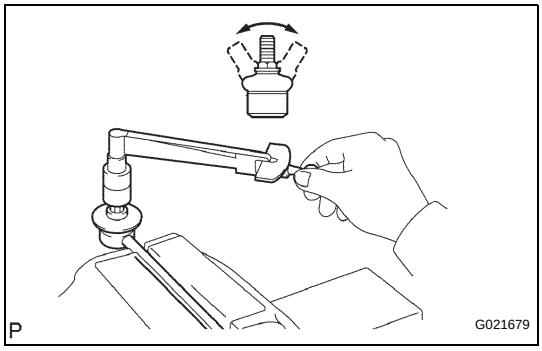

1. INSPECT FRONT STABILIZER LINK ASSEMBLY
(a) As shown in the illustration, flip the ball joint stud back and forth 5 times before installing the nut.
(b) Using a torque wrench, turn the nut continuously at a rate of 3 to 5 seconds per turn and take the torque reading on the 5th turn.
Torque: 1.0 N*m (10 kgf*cm, 8.9 in.*lbf) or less
(c) Check for any cracks and grease leakage on the ball joint dust cover.

INSTALLATION

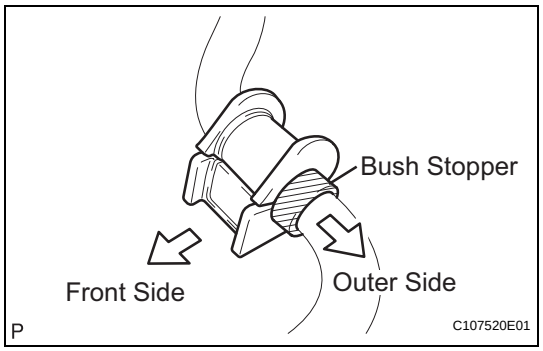

1. INSTALL FRONT STABILIZER BAR BUSH

(a) Install the stabilizer bar bush to the stabilizer bar.
HINT:
- Install the bush onto the stabilizer so that the bush stopper of the stabilizer bar faces the outside of the vehicle.
- Install the bush with its cutout facing the front of the vehicle.

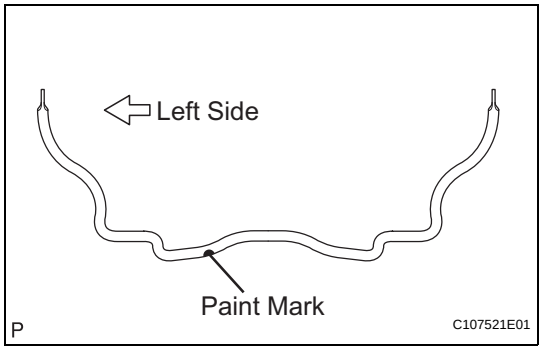

2. INSTALL FRONT STABILIZER BAR

(a) Install the stabilizer onto the crossmember with the paint mark on the left side of the vehicle.

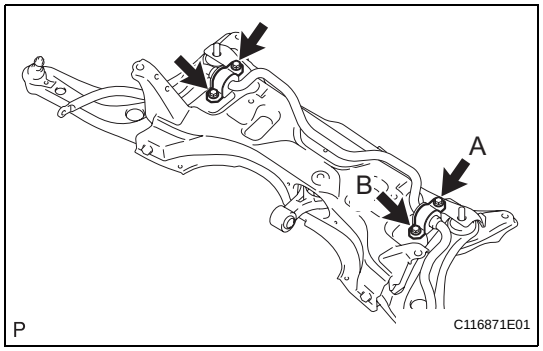

3. INSTALL FRONT STABILIZER BRACKET LH

(a) Provisionally tighten bolt A.
(b) Tighten the bolts to the specified torque, in the order of B then A.
Torque: 47 N*m (479 kgf*cm, 35 ft.*lbf)

4. INSTALL FRONT STABILIZER BRACKET RH

HINT:
The installation procedure for the RH side is the same as that for the LH side.

5. INSTALL POWER STEERING GEAR (See page PS-77)

6. INSTALL FRONT SUSPENSION CROSSMEMBER SUB-ASSEMBLY (See page PS-77)

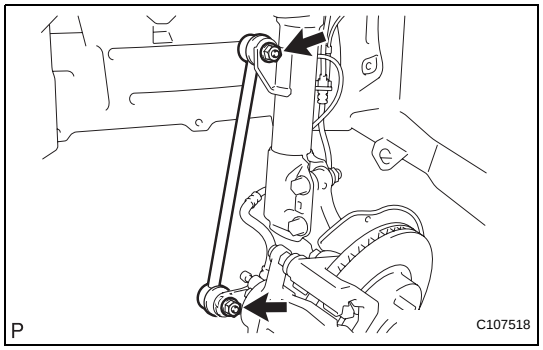

7. INSTALL FRONT STABILIZER LINK ASSEMBLY LH

(a) Install the stabilizer link with the 2 nuts.
HINT:
If the ball joint turns together with the nut, use a socket hexagon wrench 6 to hold the stud.

8. INSTALL FRONT STABILIZER LINK ASSEMBLY RH

HINT:
The installation procedure for the RH side is the same as that for the LH side.

9. INSTALL FRONT LOWER SUSPENSION ARM LH (See page DS-14)

10. INSTALL FRONT LOWER SUSPENSION ARM RH

HINT:
The installation procedure for the RH side is the same as that for the LH side.

11. INSTALL TIE ROD END SUB-ASSEMBLY LH (See page DS-15)

12. **INSTALL TIE ROD END SUB-ASSEMBLY RH**
    HINT:
    The installation procedure for the RH side is the same as that for the LH side.
13. **INSTALL STEERING COLUMN HOLE COVER SUB-ASSEMBLY (See page PS-79)**
14. **INSTALL STEERING SLIDING YOKE SUB-ASSEMBLY (See page PS-79)**
15. **INSTALL COLUMN HOLE COVER SILENCER SHEET (See page PS-79)**
16. **INSTALL FRONT WHEEL**
    Torque: 103 N*m (1,050 kgf*cm, 76 ft.*lbf)
17. **POSITION WHEELS FACING STRAIGHT AHEAD**
18. **INSTALL OUTER COWL TOP PANEL**
    Hatchback: (See page EM-146)
    Sedan: (See page EM-147)
19. **INSTALL COWL TO REGISTER DUCT SUB-ASSEMBLY (for Hatchback) (See page EM-147)**
20. **INSTALL FRONT AIR SHUTTER SEAL (for Sedan) (See page EM-148)**
21. **INSTALL FRONT WIPER MOTOR AND LINK**
    Hatchback: (See page WW-21)
    Sedan: (See page WW-12)
22. **INSTALL COWL TOP VENTILATOR LOUVER LH (for Hatchback) (See page WW-21)**
23. **INSTALL COWL TOP VENTILATOR LOUVER SUB-ASSEMBLY**
    Hatchback: (See page WW-21)
    Sedan: (See page WW-12)
24. **INSTALL HOOD TO COWL TOP SEAL (for Hatchback) (See page WW-22)**
25. **INSTALL COWL SIDE VENTILATOR SUB-ASSEMBLY LH (for Sedan) (See page WW-13)**
26. **INSTALL COWL SIDE VENTILATOR SUB-ASSEMBLY RH (for Sedan) (See page WW-13)**
27. **INSTALL FRONT WIPER ARM AND BLADE ASSEMBLY LH**
    Hatchback: (See page WW-22)
    Sedan: (See page WW-13)
28. **INSTALL FRONT WIPER ARM AND BLADE ASSEMBLY RH**
    Hatchback: (See page WW-23)
    Sedan: (See page WW-14)
29. **INSTALL FRONT WIPER ARM HEAD CAP**
    Hatchback: (See page WW-23)
    Sedan: (See page WW-15)

30. **INSPECT HOOD**
    Hatchback: (See page ED-3)
    Sedan: (See page ED-1)

31. **ADJUST HOOD**
    Hatchback: (See page ED-4)
    Sedan: (See page ED-2)

32. **CONNECT CABLE TO NEGATIVE BATTERY TERMINAL**
    Torque: 5.4 N*m (55 kgf*cm, 48 in.*lbf)

33. **INSPECT AND ADJUST FRONT WHEEL ALIGNMENT**
    (See page SP-2)

REAR COIL SPRING

COMPONENTS

for Sedan Fixed Seat Type:

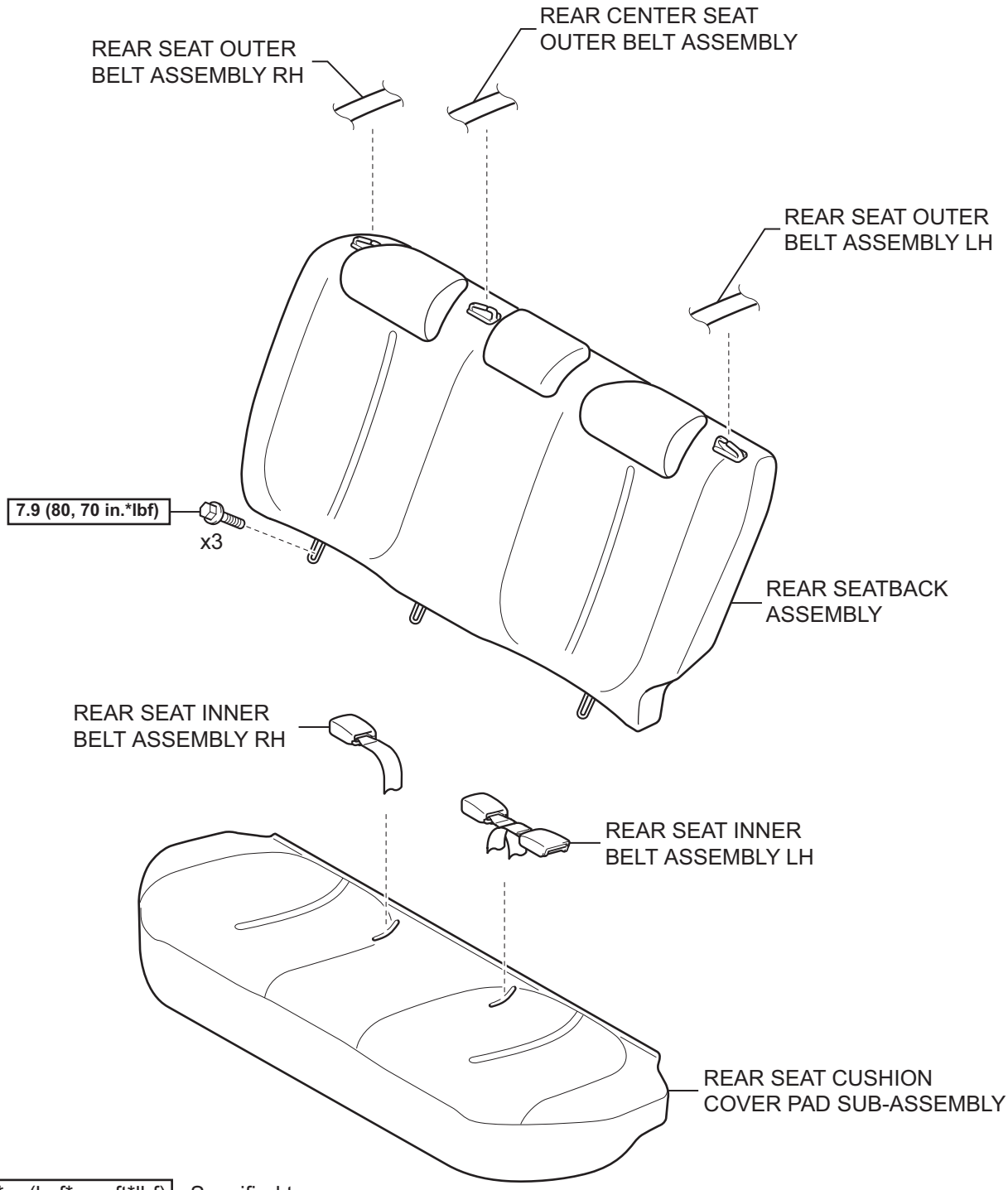

N*m (kgf*cm, ft*lbf) : Specified torque

T

B134979E09

SP

RH Side:

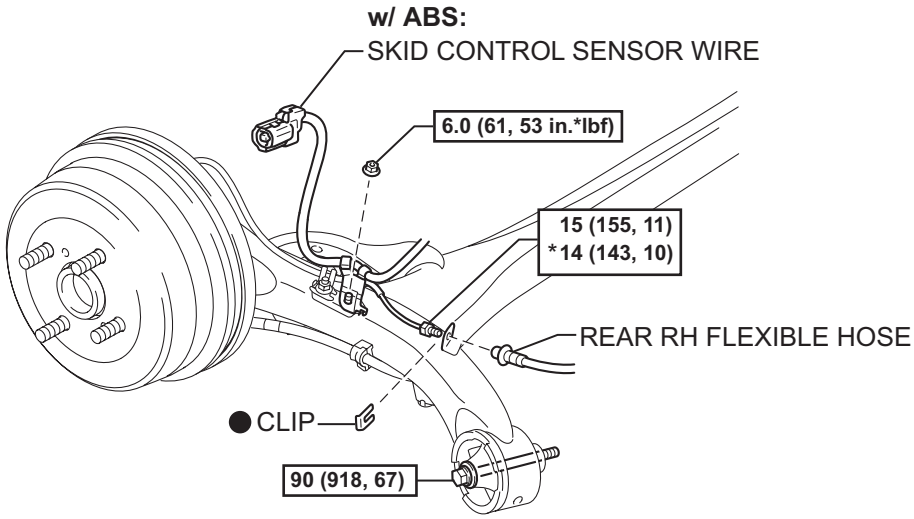

LH Side:

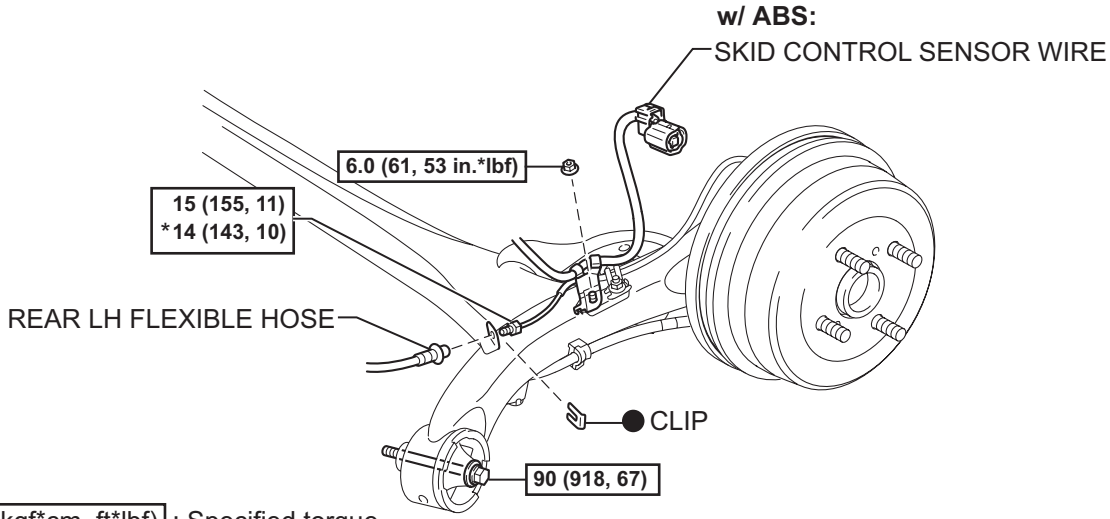

N*m (kgf*cm, ft*lbf) : Specified torque

● Non-reusable part

* For use with SST

N

C125282E06

SP

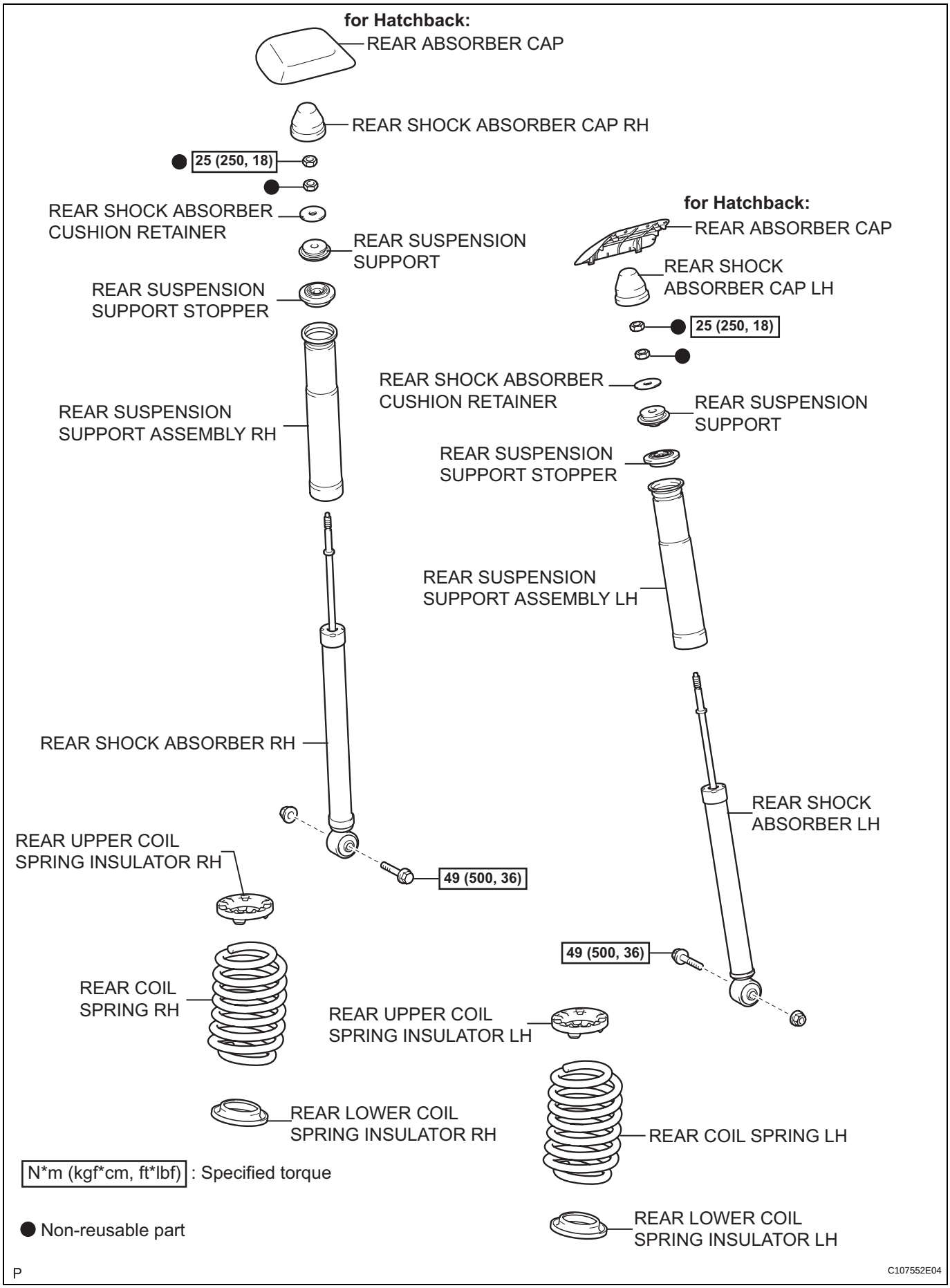
for Hatchback:
REAR ABSORBER CAP
REAR SHOCK ABSORBER CAP RH
25 (250, 18)
REAR SHOCK ABSORBER CUSHION RETAINER
REAR SUSPENSION SUPPORT
REAR SUSPENSION SUPPORT STOPPER
REAR SUSPENSION SUPPORT ASSEMBLY RH
for Hatchback:
REAR ABSORBER CAP
REAR SHOCK ABSORBER CAP LH
25 (250, 18)
REAR SHOCK ABSORBER CUSHION RETAINER
REAR SUSPENSION SUPPORT
REAR SUSPENSION SUPPORT STOPPER
REAR SUSPENSION SUPPORT ASSEMBLY LH
REAR SHOCK ABSORBER RH
REAR SHOCK ABSORBER LH
REAR UPPER COIL SPRING INSULATOR RH
49 (500, 36)
49 (500, 36)
REAR COIL SPRING RH
REAR UPPER COIL SPRING INSULATOR LH
REAR LOWER COIL SPRING INSULATOR RH
REAR COIL SPRING LH
N*m (kgf*cm, ft*lbf) : Specified torque
Non-reusable part
REAR LOWER COIL SPRING INSULATOR LH
P
C107552E04

SP

REMOVAL

1. **DISCONNECT CABLE FROM NEGATIVE BATTERY TERMINAL**

2. **REMOVE REAR SEAT CUSHION COVER PAD SUB-ASSEMBLY (for Sedan Fixed Seat Type) (See page SE-106)**

3. **REMOVE REAR SEATBACK ASSEMBLY (for Sedan Fixed Seat Type) (See page SE-106)**

4. **REMOVE REAR WHEEL**

5. **DRAIN BRAKE FLUID**
   NOTICE:
   Immediately wash off any brake fluid that comes into contact with any painted surfaces.

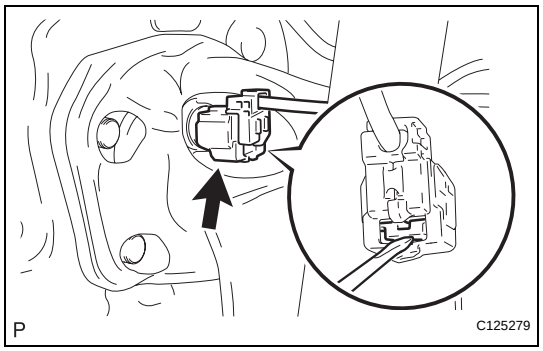

6. **SEPARATE SKID CONTROL SENSOR WIRE (w/ ABS)**
   (a) Using a screwdriver, remove the claw of the connector lock portion and disconnect the skid control sensor wire connector.
   NOTICE:
   Do not remove the connector cover from the connector because the skid control sensor wire may be damaged.

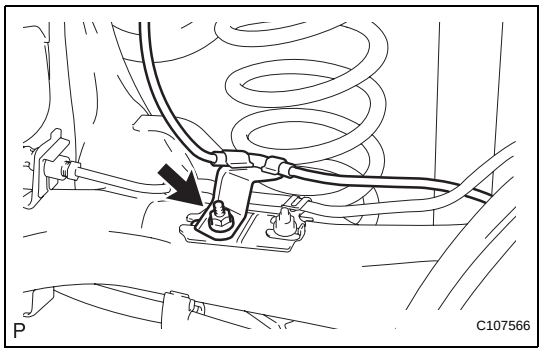

   (b) Remove the nut and separate the skid control sensor wire.

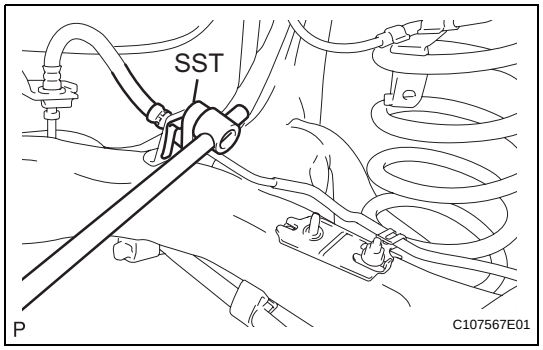

7. **SEPARATE REAR LH FLEXIBLE HOSE**
   (a) Using SST, separate the brake tube from the flexible hose.
   SST 09023-00101
   (b) Remove the clip and disconnect the flexible hose from the axle beam.

8. **SEPARATE REAR RH FLEXIBLE HOSE**
   HINT:
   The removal procedure for the RH side is the same as that for the LH side.

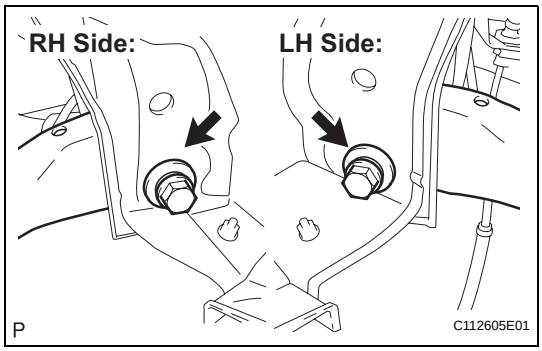

9. LOOSEN REAR AXLE BEAM

(a) Loosen the 2 bolts.

NOTICE:

Do not remove the bolts.

10. REMOVE REAR ABSORBER CAP (for Hatchback)

11. REMOVE REAR SHOCK ABSORBER CAP LH

12. REMOVE REAR SHOCK ABSORBER CAP RH

13. REMOVE REAR SHOCK ABSORBER LH (See page SP-55)

14. REMOVE REAR SHOCK ABSORBER RH

HINT:

The removal procedure for the RH side is the same as that for the LH side.

15. REMOVE REAR COIL SPRING LH

(a) Lower the jacks slowly.

(b) Remove the coil spring, coil spring insulator upper and coil spring insulator lower.

16. REMOVE REAR COIL SPRING RH

HINT:

The removal procedure for the RH side is the same as that for the LH side.

INSTALLATION

1. INSTALL REAR COIL SPRING LH

(a) Install the coil spring insulator lower onto the axle beam.

(b) Install the coil spring insulator upper so that its gap fits onto the end of coil spring.

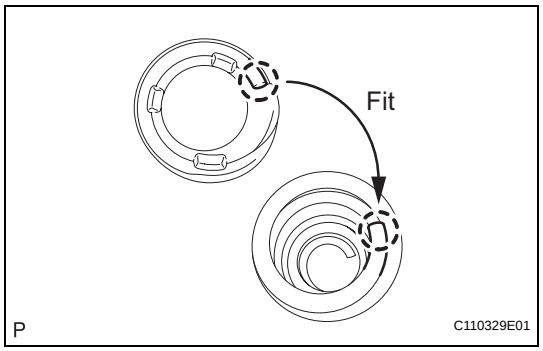

(c) Install the coil spring onto the axle beam.
NOTICE:
The paint mark of the coil spring should be towards the underside and rear side of the vehicle.

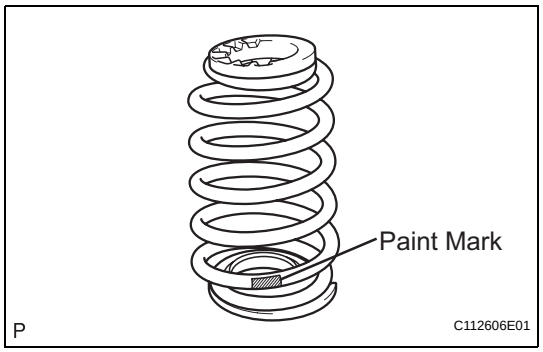

2. INSTALL REAR COIL SPRING RH

HINT:
The installation procedure for the RH side is the same as that for the LH side.

3. TEMPORARILY TIGHTEN REAR SHOCK ABSORBER LH (See page SP-56)

4. TEMPORARILY TIGHTEN REAR SHOCK ABSORBER RH

HINT:
The installation procedure for the RH side is the same as that for the LH side.

5. INSTALL REAR SHOCK ABSORBER CAP LH

6. INSTALL REAR SHOCK ABSORBER CAP RH

7. INSTALL REAR ABSORBER CAP (for Hatchback)

8. INSTALL REAR LH FLEXIBLE HOSE

(a) Connect the flexible hose onto the axle beam with a new clip.

(b) Using SST, install the brake tube.
SST 09023-00101
Torque: for use without SST
15 N*m (155 kgf*cm, 11 ft.*lbf)
for use with SST
14 N*m (143 kgf*cm, 10 ft.*lbf)

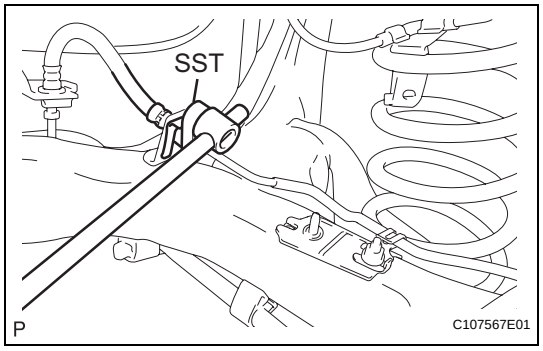

HINT:
- Use a torque wrench with a fulcrum length of 300 mm (11.81 in.).
- This torque value is effective when SST is parallel to a torque wrench.

SP

9. INSTALL REAR RH FLEXIBLE HOSE

HINT:
The installation procedure for the RH side is the same as that for the LH side.

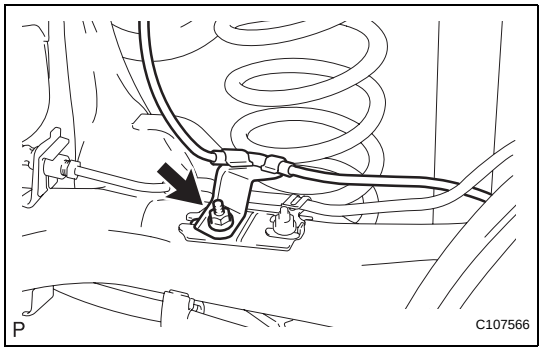

10. INSTALL SKID CONTROL SENSOR WIRE (w/ ABS)

(a) Install the skid control sensor wire onto the axle beam with the nut.
Torque: 6.0 N*m (61 kgf*cm, 53 in.*lbf)

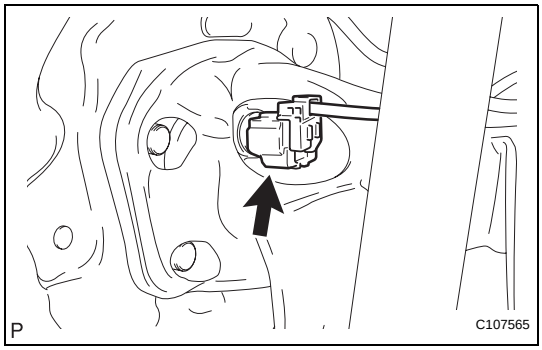

(b) Connect the skid control sensor wire connector.

11. INSTALL REAR WHEEL
Torque: 103 N*m (1,050 kgf*cm, 76 ft.*lbf)

12. STABILIZE SUSPENSION

(a) Lower the vehicle from the jack.
(b) Bounce the vehicle up and down several times to stabilize the suspension.

13. FULLY TIGHTEN REAR AXLE BEAM (See page SP-68)

14. FULLY TIGHTEN REAR SHOCK ABSORBER LH (See page SP-56)

15. FULLY TIGHTEN REAR SHOCK ABSORBER RH

HINT:
The installation procedure for the RH side is the same as that for the LH side.

16. INSTALL REAR SEATBACK ASSEMBLY (for Sedan Fixed Seat Type) (See page SE-108)

17. INSTALL REAR SEAT CUSHION COVER PAD SUB-ASSEMBLY (for Sedan Fixed Seat Type) (See page SE-109)

18. CONNECT CABLE TO NEGATIVE BATTERY TERMINAL
Torque: 5.4 N*m (55 kgf*cm, 48 in.*lbf)

19. FILL RESERVOIR WITH BRAKE FLUID (See page BR-10)

20. BLEED MASTER CYLINDER (See page BR-10)

21. BLEED BRAKE LINE (See page BR-12)

22. CHECK FLUID LEVEL IN RESERVOIR (See page BR-12)

23. CHECK FOR BRAKE FLUID LEAKAGE

24. INSPECT REAR WHEEL ALIGNMENT
(See page SP-10)

25. CHECK ABS SENSOR SIGNAL (w/ ABS)
(See page BC-14)

REAR SHOCK ABSORBER

COMPONENTS

for Sedan Fixed Seat Type:

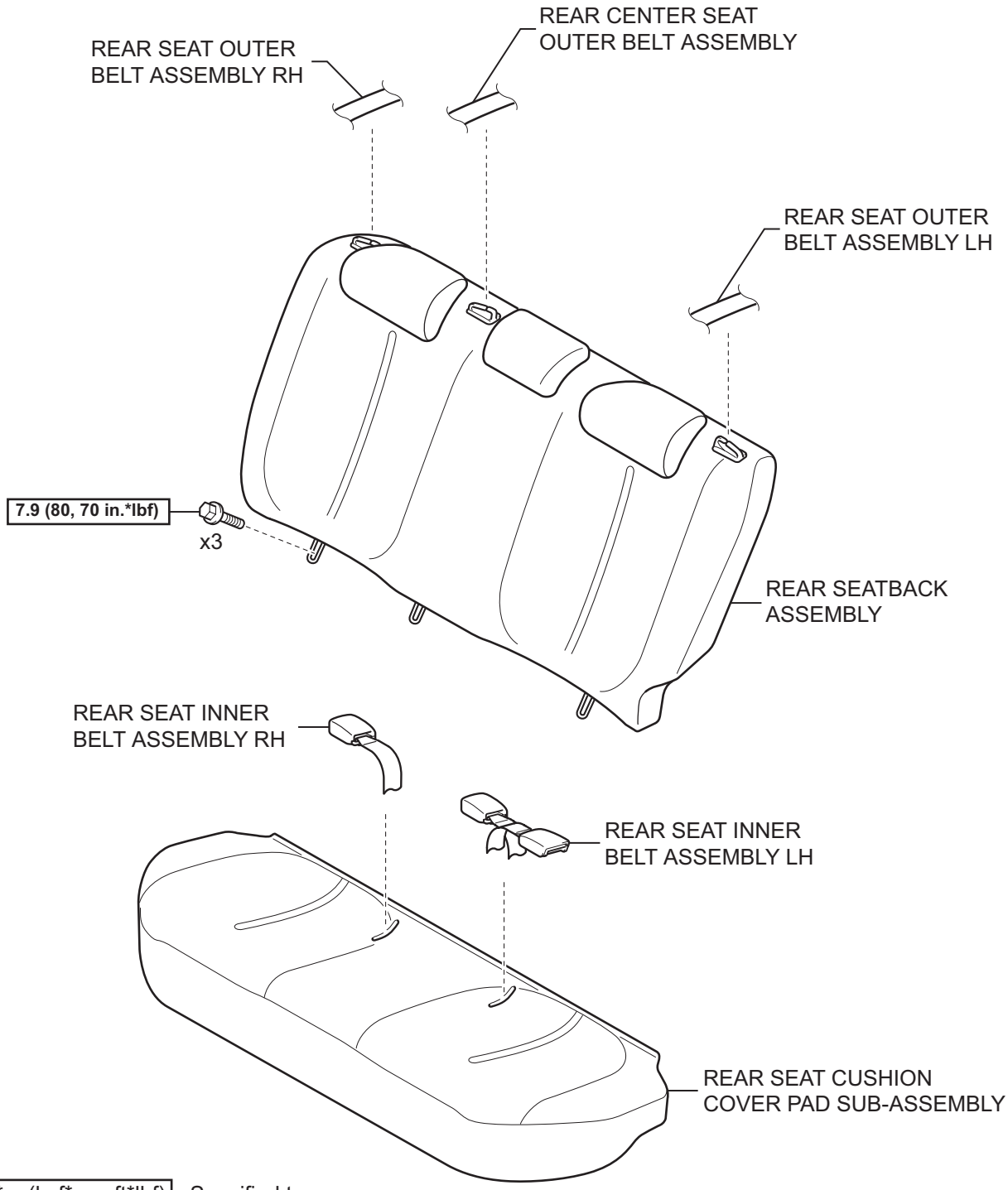

N*m (kgf*cm, ft*lbf) : Specified torque

T

B134979E09

SP

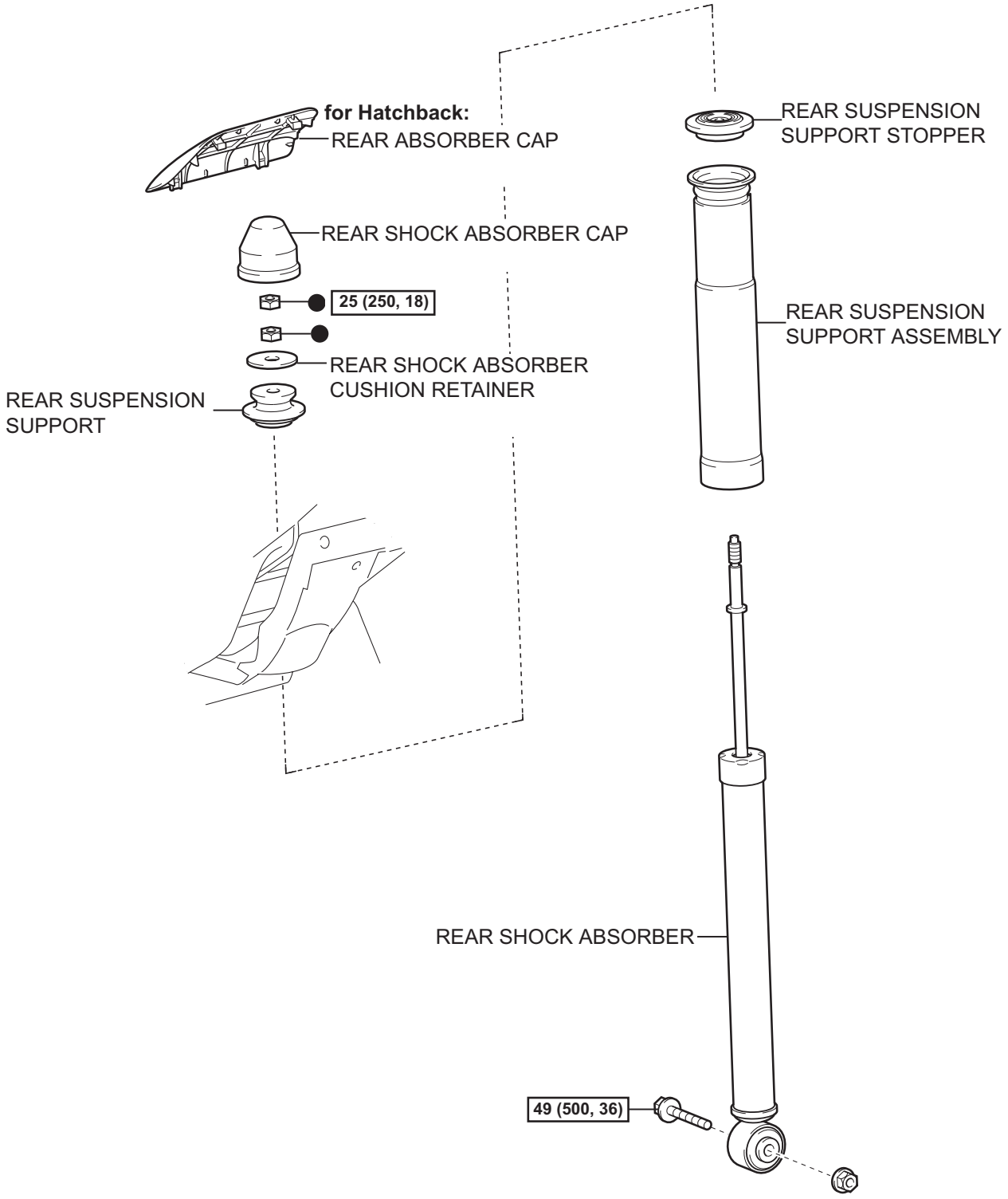

N*m (kgf*cm, ft*lbf) : Specified torque

● Non-reusable part

P

C133136E01

REMOVAL

1. **REMOVE REAR WHEEL**
2. **REMOVE REAR SEAT CUSHION COVER PAD SUB-ASSEMBLY (for Sedan Fixed Seat Type) (See page SE-106)**
3. **REMOVE REAR SEATBACK ASSEMBLY (for Sedan Fixed Seat Type) (See page SE-106)**
4. **REMOVE REAR ABSORBER CAP (for Hatchback)**
5. **REMOVE REAR SHOCK ABSORBER CAP**
6. **REMOVE REAR SHOCK ABSORBER**
   (a) Support the axle beam with a jack. Insert a wooden block between the jack and the rear axle spring seat to prevent damage.
   (b) Remove the 2 nuts while keeping the piston rod from rotating.
   (c) Remove the cushion retainer and suspension support.

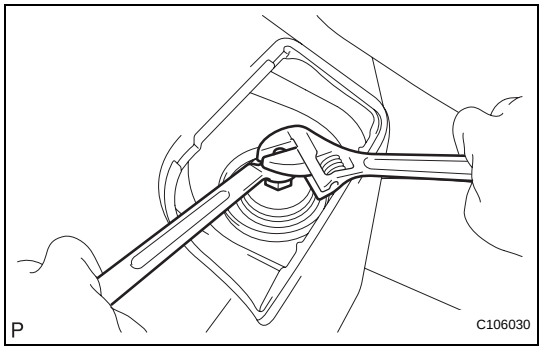

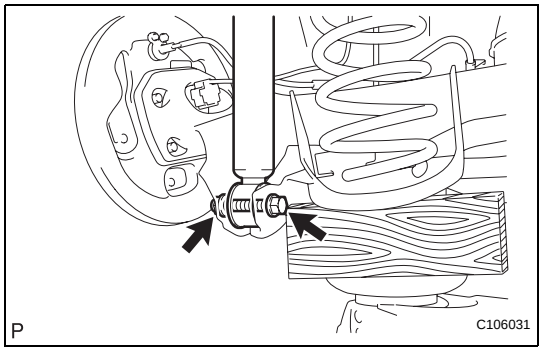

   (d) Remove the bolt while keeping the nut from rotating and remove the shock absorber.
   NOTICE:
   Remove the nut on the bolt side because the one on the lower side is a jam nut.
7. **REMOVE REAR SUSPENSION SUPPORT STOPPER**
8. **REMOVE REAR SUSPENSION SUPPORT ASSEMBLY**

INSPECTION

1. **INSPECT REAR SHOCK ABSORBER**
   (a) Compress and extend the shock absorber rod and check that there is no abnormal resistance or abnormal sound during the operation.
   If there is any abnormality, replace the shock absorber with a new one.
   NOTICE:
   When disposing of the shock absorber rear, see DISPOSAL on page SP-57.

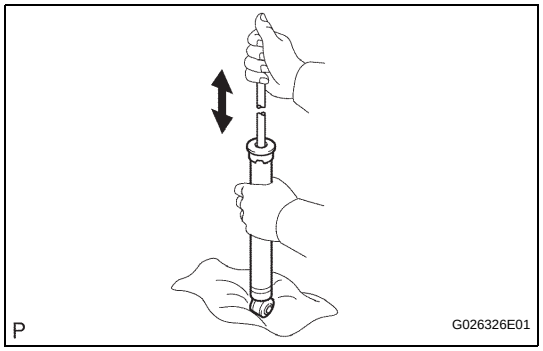

SP

INSTALLATION

1. INSTALL REAR SUSPENSION SUPPORT ASSEMBLY

2. INSTALL REAR SUSPENSION SUPPORT STOPPER

3. TEMPORARILY TIGHTEN REAR SHOCK ABSORBER

(a) Support the axle beam with a jack. Insert a wooden block between the jack and the rear axle spring seat to prevent damage.

(b) Jack up the axle beam slowly, and provisionally tighten the shock absorber (lower side) with the bolt and nut to the axle beam.

(c) Install the suspension support and cushion retainer.

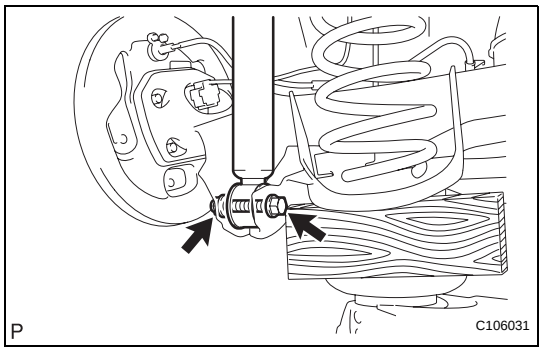

(d) While holding the piston rod, install a new nut (lower nut) to the specified standard.
Standard:
15 to 18 mm (0.591 to 0.709 in.)

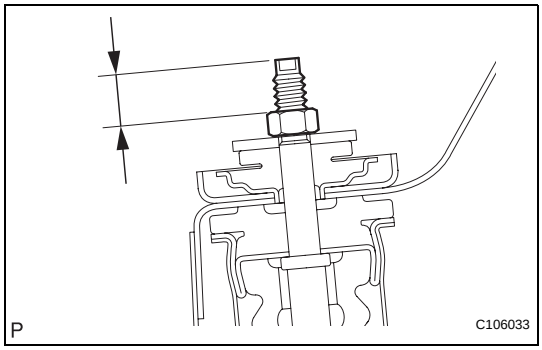

(e) While holding the piston rod, tighten a new nut (upper nut).
Torque: 25 N*m (250 kgf*cm, 18 ft.*lbf)

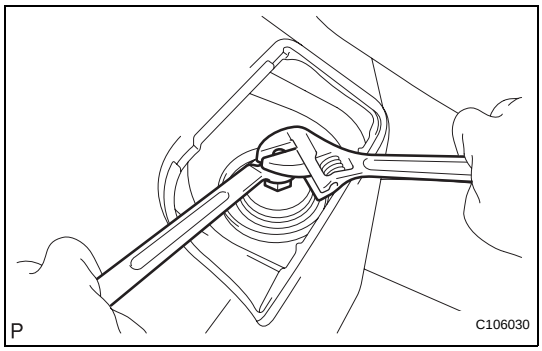

4. INSTALL REAR SHOCK ABSORBER CAP

5. INSTALL REAR ABSORBER CAP (for Hatchback)

6. INSTALL REAR SEATBACK ASSEMBLY (for Sedan Fixed Seat Type) (See page SE-108)

7. INSTALL REAR SEAT CUSHION COVER PAD SUB-ASSEMBLY (for Sedan Fixed Seat Type) (See page SE-109)

8. INSTALL REAR WHEEL
Torque: 103 N*m (1,050 kgf*cm, 76 ft.*lbf)

9. STABILIZE SUSPENSION

(a) Lower the vehicle from the jack.

(b) Bounce the vehicle up and down several times to stabilize the suspension.

10. FULLY TIGHTEN REAR SHOCK ABSORBER

(a) Fully tighten the shock absorber (lower side) with the bolt.
Torque: 49 N*m (500 kgf*cm, 36 ft.*lbf)

11. INSPECT REAR WHEEL ALIGNMENT
(See page SP-10)

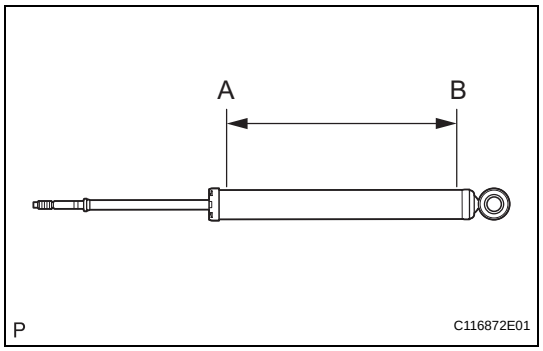

DISPOSAL

1. DISPOSE OF REAR SHOCK ABSORBER

(a) Fully extend the shock absorber piston rod.

(b) Using a drill or similar tool, slowly make a hole in the area (A-B) shown in the illustration to discharge the gas inside.

NOTICE:

- **The gas is colorless, odorless and harmless.**
- **Since the discharging gas may cause chips to scatter, cover the drill with a shop rag or piece of cloth when making the hole.**

REAR AXLE BEAM

COMPONENTS

for Sedan Fixed Seat Type:

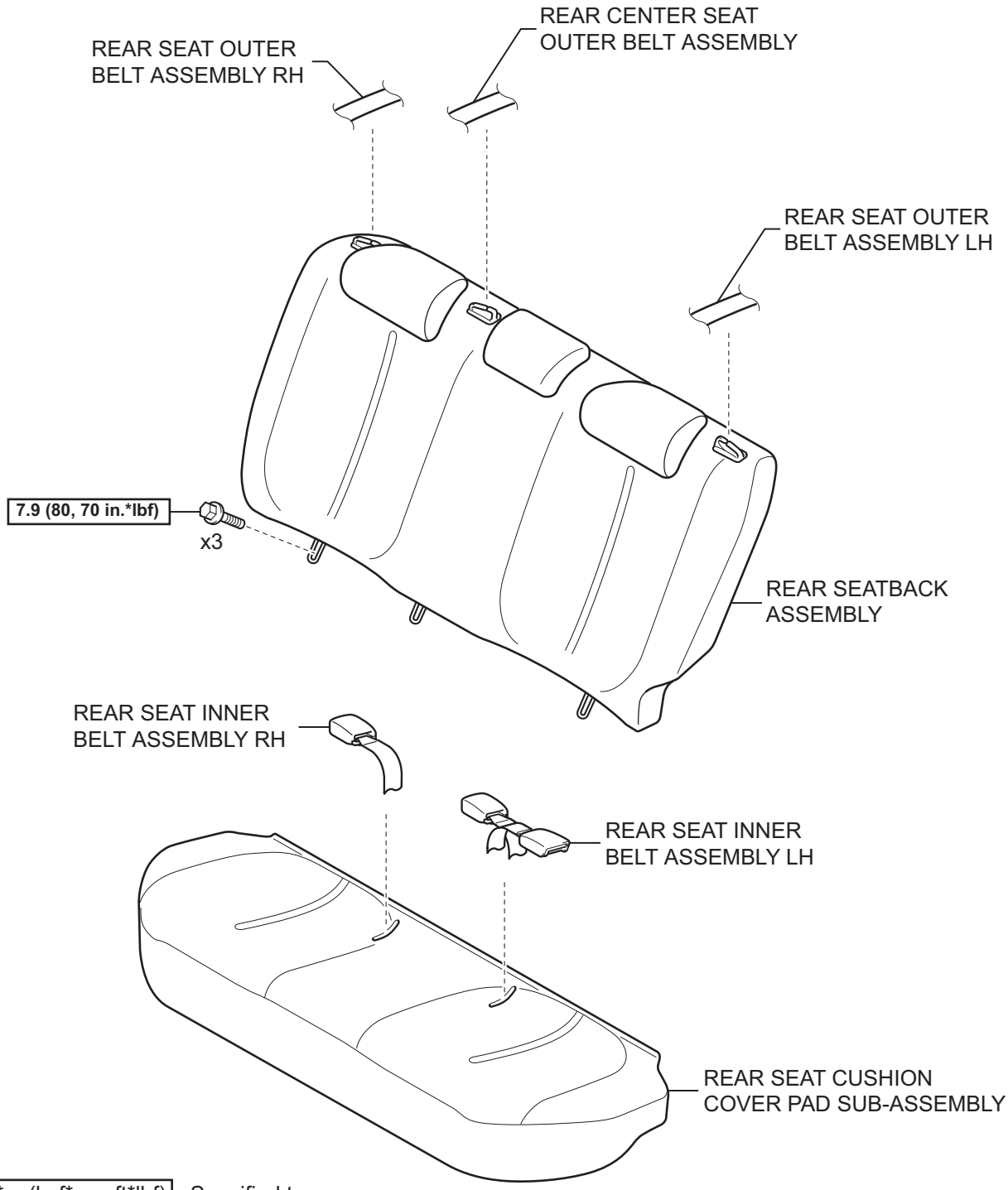

N*m (kgf*cm, ft*lbf) : Specified torque

T

B134979E09

SP

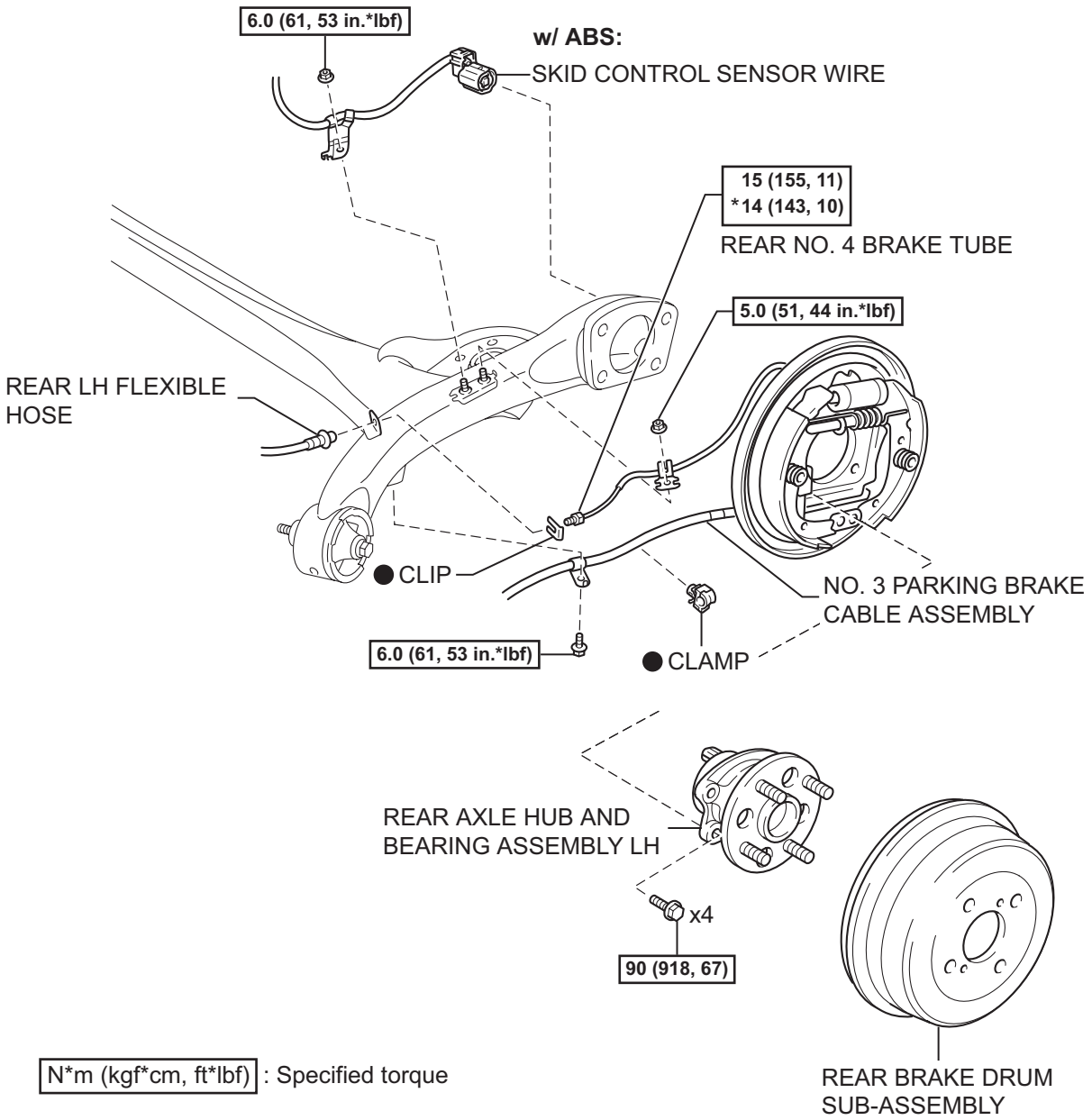

N*m (kgf*cm, ft*lbf) : Specified torque

● Non-reusable part

* For use with SST

N

C126192E06

SP

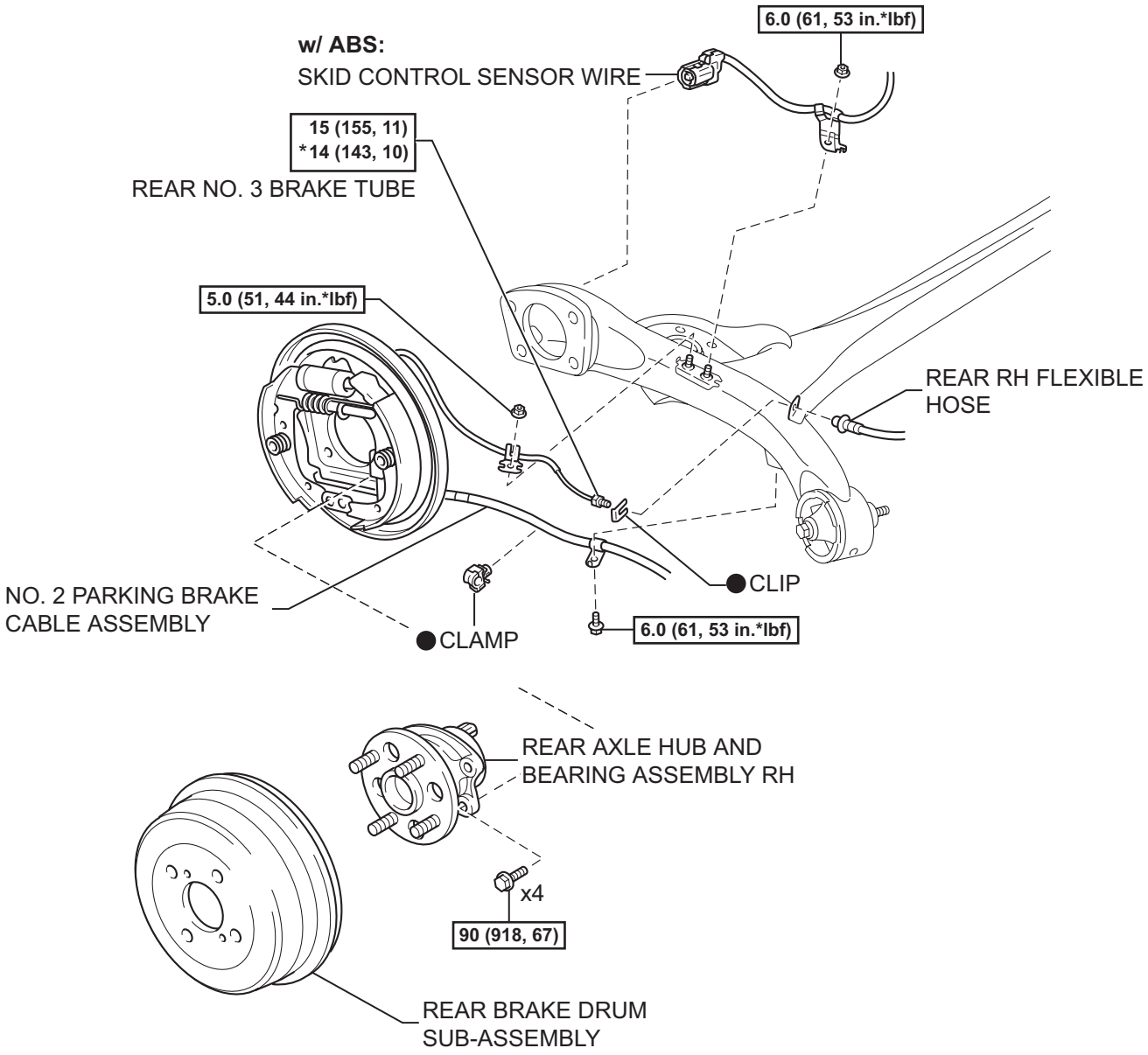

N*m (kgf*cm, ft*lbf) : Specified torque

● Non-reusable part * For use with SST

N

C126193E06

SP

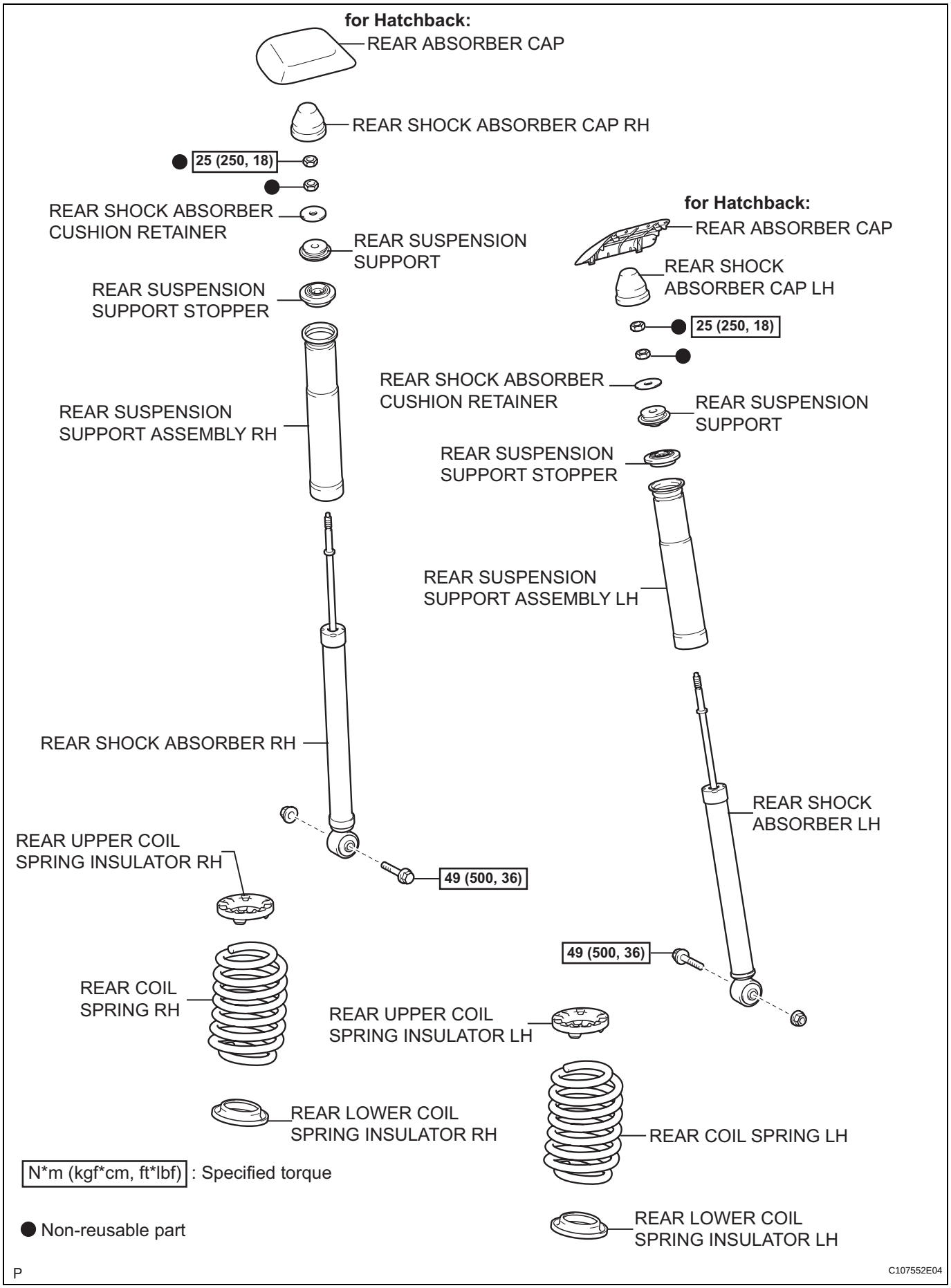
for Hatchback:
REAR ABSORBER CAP
REAR SHOCK ABSORBER CAP RH
25 (250, 18)
REAR SHOCK ABSORBER CUSHION RETAINER
REAR SUSPENSION SUPPORT
REAR SUSPENSION SUPPORT STOPPER
REAR SUSPENSION SUPPORT ASSEMBLY RH
REAR SHOCK ABSORBER RH
REAR UPPER COIL SPRING INSULATOR RH
49 (500, 36)
REAR COIL SPRING RH
REAR LOWER COIL SPRING INSULATOR RH
N*m (kgf*cm, ft*lbf) : Specified torque
Non-reusable part
for Hatchback:
REAR ABSORBER CAP
REAR SHOCK ABSORBER CAP LH
25 (250, 18)
REAR SHOCK ABSORBER CUSHION RETAINER
REAR SUSPENSION SUPPORT
REAR SUSPENSION SUPPORT STOPPER
REAR SUSPENSION SUPPORT ASSEMBLY LH
REAR SHOCK ABSORBER LH
49 (500, 36)
REAR UPPER COIL SPRING INSULATOR LH
REAR COIL SPRING LH
REAR LOWER COIL SPRING INSULATOR LH
P
C107552E04

SP

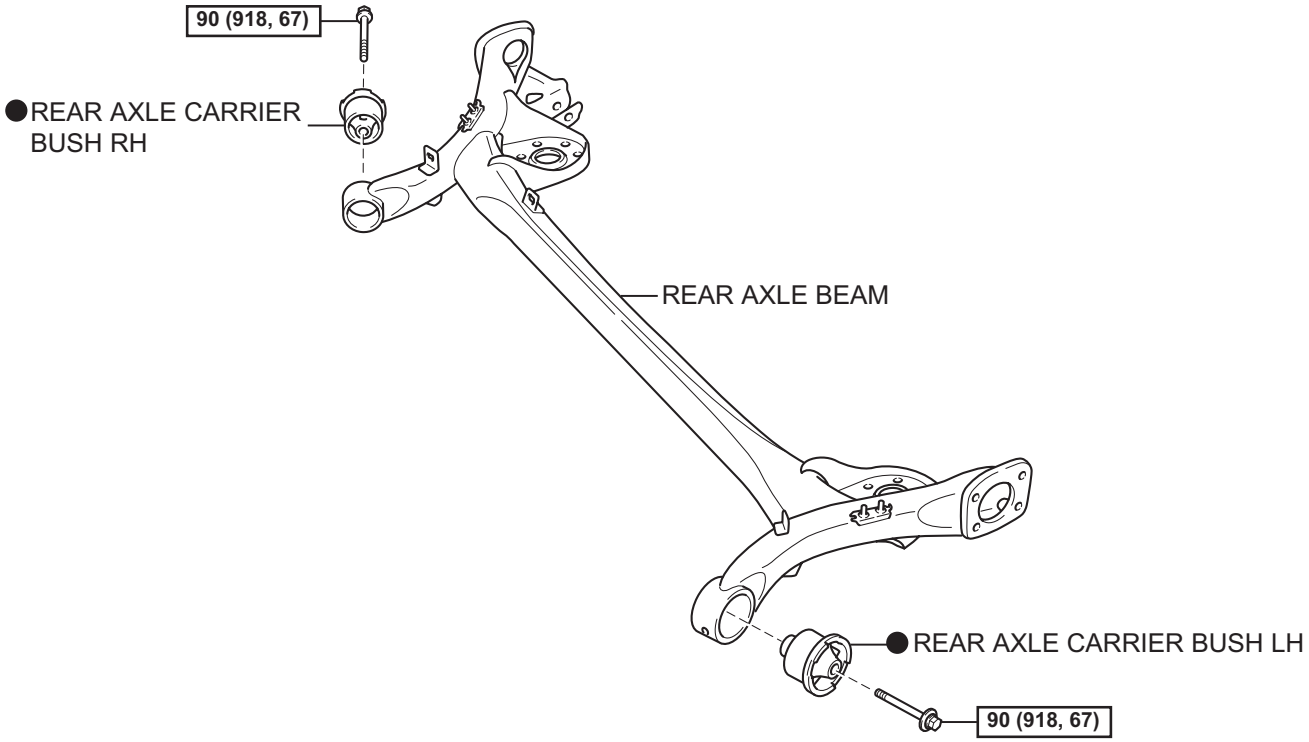

N*m (kgf*cm, ft*lbf) : Specified torque

● Non-reusable part

N

C121822E01

REMOVAL

1. **DISCONNECT CABLE FROM NEGATIVE BATTERY TERMINAL**

2. **REMOVE REAR SEAT CUSHION COVER PAD SUB-ASSEMBLY (for Sedan Fixed Seat Type) (See page SE-106)**

3. **REMOVE REAR SEATBACK ASSEMBLY (for Sedan Fixed Seat Type) (See page SE-106)**

4. **REMOVE REAR WHEEL**

5. **DRAIN BRAKE FLUID**
   NOTICE:
   Immediately wash off any brake fluid that comes into contact with any painted surfaces.

6. **SEPARATE SKID CONTROL SENSOR WIRE (w/ ABS) (See page SP-49)**

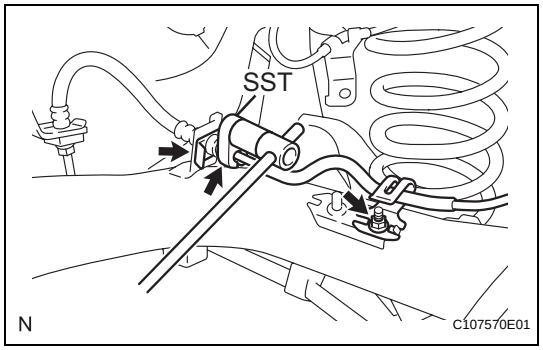

7. **SEPARATE REAR NO. 4 BRAKE TUBE**
   (a) Using SST, separate the brake tube from the flexible hose.
   SST 09023-00100
   (b) Remove the clip and disconnect the flexible hose from the axle beam.
   (c) Remove the nut and separate the brake tube.

8. **SEPARATE REAR NO. 3 BRAKE TUBE**
   HINT:
   The removal procedure for the RH side is the same as that for the LH side.

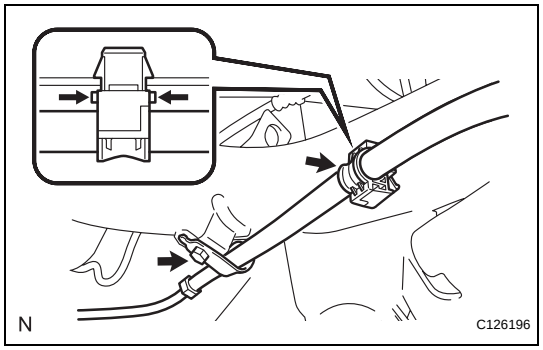

9. **SEPARATE NO. 3 PARKING BRAKE CABLE ASSEMBLY**
   (a) Using pliers, pinch both ends of the claw of cable clamp and flex the clamp to remove it.
   (b) Remove the bolt and separate the parking brake cable.
   (c) Remove the cable clamp from the parking brake cable.
   HINT:
   Replace the clamp with a new one when installing the parking brake cable.

10. **SEPARATE NO. 2 PARKING BRAKE CABLE ASSEMBLY**
    HINT:
    The removal procedure for the RH side is the same as that for the LH side.

11. **REMOVE REAR BRAKE DRUM SUB-ASSEMBLY (See page BR-60)**

12. **REMOVE REAR AXLE HUB AND BEARING ASSEMBLY LH (See page AH-14)**

13. REMOVE REAR AXLE HUB AND BEARING ASSEMBLY RH

HINT:
The removal procedure for the RH side is the same as that for the LH side.

14. LOOSEN REAR AXLE BEAM (See page SP-50)

15. REMOVE REAR ABSORBER CAP (for Hatchback)

16. REMOVE REAR SHOCK ABSORBER CAP LH

17. REMOVE REAR SHOCK ABSORBER CAP RH

18. REMOVE REAR SHOCK ABSORBER LH (See page SP-55)

19. REMOVE REAR SHOCK ABSORBER RH

HINT:
The removal procedure for the RH side is the same as that for the LH side.

20. REMOVE REAR COIL SPRING LH (See page SP-50)

21. REMOVE REAR COIL SPRING RH

HINT:
The removal procedure for the RH side is the same as that for the LH side.

22. REMOVE REAR AXLE BEAM

(a) Remove the 2 bolts and remove the axle beam.

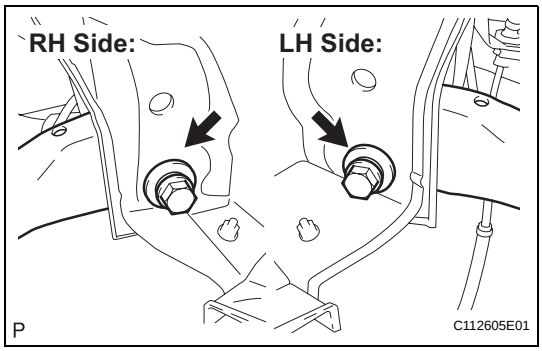

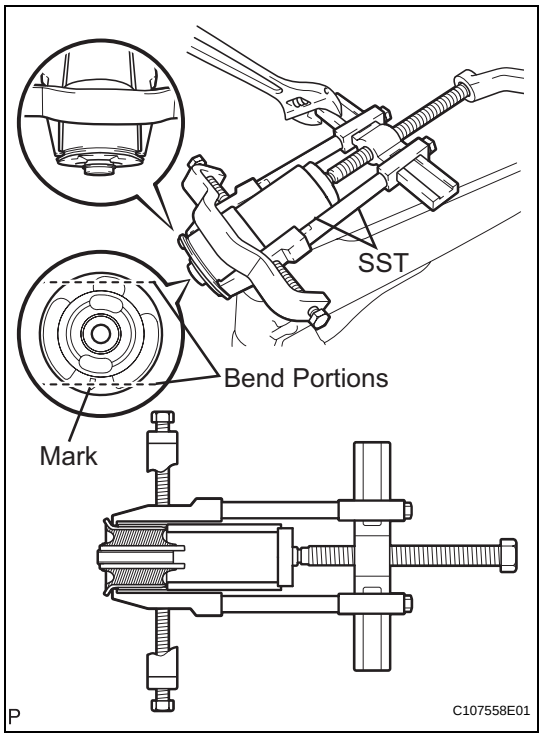

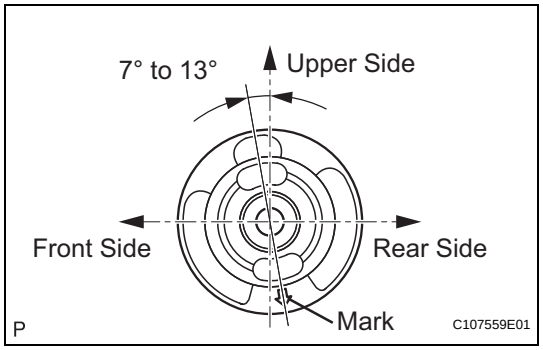

REPLACEMENT

1. REMOVE REAR AXLE CARRIER BUSH LH

(a) Place a match mark on the axle beam with it aligned with the bush mark.

(b) Using a chisel and hammer, bend the 2 portions of the bush rib.

NOTICE:

Bend the bush rib until the claw of SST can be suspended.

(c) Using SST, remove the bush from the axle beam.

SST 09950-40011 (09951-04020, 09952-04010, 09953-04030, 09954-04020, 09955-04011, 09957-04010, 09958-04011), 09612-30012, 09950-60010 (09951-00590)

NOTICE:

Apply paint to any scratches on the rear axle beam.

2. REMOVE REAR AXLE CARRIER BUSH RH

HINT:

The removal procedure for the RH side is the same as that for the LH side.

3. INSTALL REAR AXLE CARRIER BUSH LH

(a) Align the matchmarks on a new bush and the axle beam and provisionally install the bush onto the axle beam, as shown in the illustration.

NOTICE:

Install the bush in the same orientation as the old one was prior to removal because they are directional.

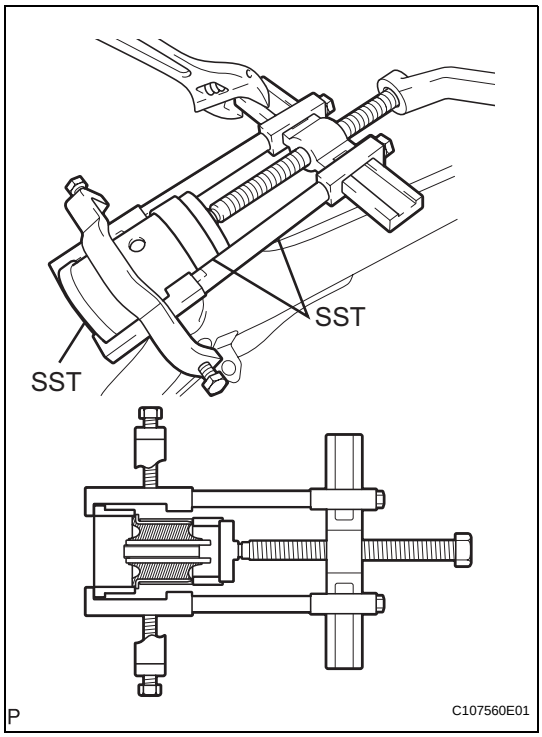

(b) Using SST, install the bush onto the axle beam.
SST 09950-40011 (09951-04020, 09952-04010, 09953-04030, 09954-04030, 09955-04051, 09957-04010, 09958-04011), 09950-60020 (09951-00810, 09387-02010), 09223-15020
NOTICE:
Do not damage the rubber portion when installing the bush.

4. **INSTALL REAR AXLE CARRIER BUSH RH**
HINT:
The installation procedure for the RH side is the same as that for the LH side.

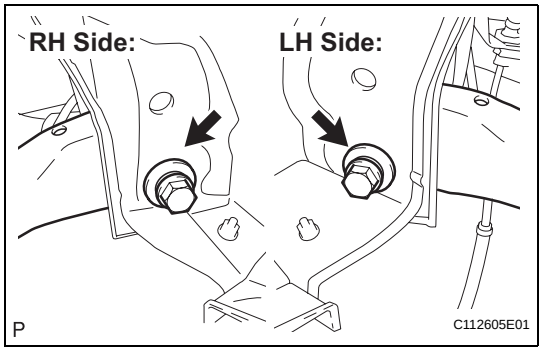

INSTALLATION

1. **TEMPORARILY TIGHTEN REAR AXLE BEAM**
(a) Support the rear axle beam with a jack.
(b) Install the axle beam onto the vehicle and provisionally tighten the 2 bolts.

2. **INSTALL REAR COIL SPRING LH (See page SP-50)**

3. **INSTALL REAR COIL SPRING RH**
HINT:
The installation procedure for the RH side is the same as that for the LH side.

4. **TEMPORARILY TIGHTEN REAR SHOCK ABSORBER LH (See page SP-56)**

5. **TEMPORARILY TIGHTEN REAR SHOCK ABSORBER RH**
HINT:
The installation procedure for the RH side is the same as that for the LH side.

6. **INSTALL REAR SHOCK ABSORBER CAP LH**

7. **INSTALL REAR SHOCK ABSORBER CAP RH**

8. **INSTALL REAR ABSORBER CAP (for Hatchback)**

9. **INSTALL REAR AXLE HUB AND BEARING ASSEMBLY LH (See page AH-14)**

10. **INSTALL REAR AXLE HUB AND BEARING ASSEMBLY RH**
HINT:
The installation procedure for the RH side is the same as that for the LH side.

11. INSPECT REAR AXLE HUB BEARING (See page AH-2)

12. INSTALL REAR BRAKE DRUM SUB-ASSEMBLY

13. ADJUST REAR DRUM BRAKE SHOE CLEARANCE (See page BR-67)

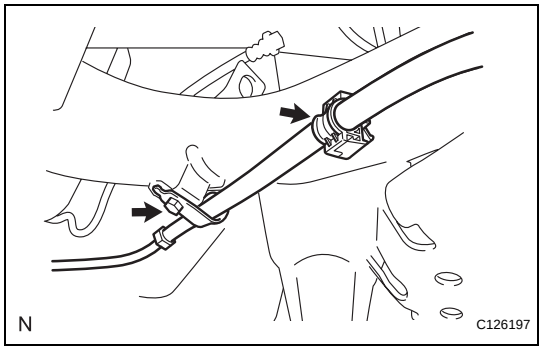

14. INSTALL NO. 3 PARKING BRAKE CABLE ASSEMBLY

(a) Install the parking brake cable with the bolt and a new clamp.
Torque: 6.0 N*m (61 kgf*cm, 53 in.*lbf)

15. INSTALL NO. 2 PARKING BRAKE CABLE ASSEMBLY

HINT:
The installation procedure for the RH side is the same as that for the LH side.

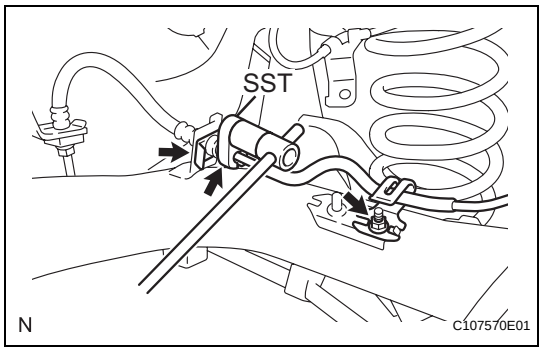

16. INSTALL REAR NO. 4 BRAKE TUBE

(a) Install the brake tube onto the axle beam with the nut.
Torque: 5.0 N*m (51 kgf*cm, 44 in.*lbf)

(b) Connect the flexible hose to the axle beam with a new clip.

(c) Using SST, install the brake tube onto the flexible hose.
SST 09023-00100
Torque: for use without SST
15 N*m (155 kgf*cm, 11 ft.*lbf)
for use with SST
14 N*m (143 kgf*cm, 10 ft.*lbf)

HINT:
- Use a torque wrench with a fulcrum length of 300 mm (11.81 in.).
- This torque value is effective when SST is parallel to a torque wrench.

17. INSTALL REAR NO. 3 BRAKE TUBE

HINT:
The installation procedure for the RH side is the same as that for the LH side.

18. INSTALL SKID CONTROL SENSOR WIRE (w/ ABS) (See page SP-51)

19. INSTALL REAR WHEEL
Torque: 103 N*m (1,050 kgf*cm, 76 ft.*lbf)

20. STABILIZE SUSPENSION

(a) Lower the vehicle from the jack.

(b) Bounce the vehicle up and down several times to stabilize the suspension.

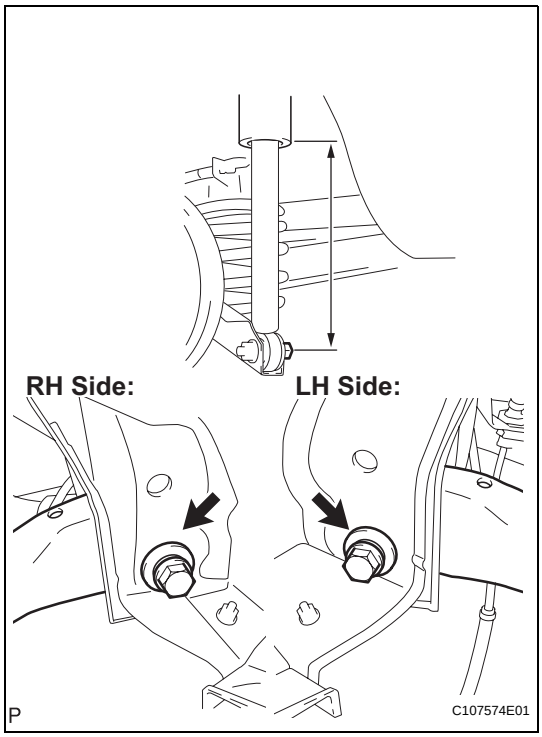

21. FULLY TIGHTEN REAR AXLE BEAM

(a) Suspend the jack on the rear axle spring seat and adjust the length of the shock absorber to the reference value.
Length of shock absorber:
220 mm (8.7 in.)

(b) Fully tighten the 2 bolts.
Torque: 90 N*m (918 kgf*cm, 67 ft.*lbf)

22. FULLY TIGHTEN REAR SHOCK ABSORBER LH (See page SP-56)

23. FULLY TIGHTEN REAR SHOCK ABSORBER RH
HINT:
The installation procedure for the RH side is the same as that for the LH side.

24. INSTALL REAR SEATBACK ASSEMBLY (for Sedan Fixed Seat Type) (See page SE-108)

25. INSTALL REAR SEAT CUSHION COVER PAD SUB-ASSEMBLY (for Sedan Fixed Seat Type) (See page SE-109)

26. CONNECT CABLE TO NEGATIVE BATTERY TERMINAL
Torque: 5.4 N*m (55 kgf*cm, 48 in.*lbf)

27. FILL RESERVOIR WITH BRAKE FLUID (See page BR-10)

28. BLEED MASTER CYLINDER (See page BR-10)

29. BLEED BRAKE LINE (See page BR-12)

30. CHECK FLUID LEVEL IN RESERVOIR (See page BR-12)

31. CHECK FOR BRAKE FLUID LEAKAGE

32. INSPECT REAR WHEEL ALIGNMENT
(See page SP-10)

33. CHECK ABS SENSOR SIGNAL (w/ ABS)
(See page BC-14)