BRAKE SYSTEM

SECTION BR

CONTENTS

PRECAUTIONS 4
Supplemental Restraint System (SRS) "AIR BAG" and "SEAT BELT PRE-TENSIONER"....4
Precautions for Brake System....4
Precautions When Working On ABS....5
Wiring Diagrams and Trouble Diagnosis....5
PREPARATION 6
Commercial Service Tools 6
NOISE, VIBRATION AND HARSHNESS (NVH) TROUBLESHOOTING 7
NVH Troubleshooting Chart....7
ON-VEHICLE SERVICE 8
Checking Brake Fluid Level....8
Checking Brake Line 8
Changing Brake Fluid 8
Brake Burnishing Procedure....8
Bleeding Brake System 9
BRAKE HYDRAULIC LINE....10
Hydraulic Circuit....10
Removal....10
Inspection....11
Installation....11
BRAKE PEDAL AND BRACKET....12
Removal and Installation 12
Inspection....12
Adjustment....12
MASTER CYLINDER (TOKICO) 14
Removal....14
Disassembly....15
Inspection....15
Assembly 15
Installation....16
MASTER CYLINDER [BOSCH (NABCO)] 17
Removal....17
Disassembly....17
Inspection....18
Assembly 18
Installation....19
BRAKE BOOSTER....20
On-vehicle Service....20
OPERATING CHECK 20
AIRTIGHT CHECK 20
Removal....20
Inspection....20
OUTPUT ROD LENGTH CHECK 20
Installation....21
VACUUM HOSE....22
Removal and Installation 22
Inspection....22
HOSES AND CONNECTORS 22
CHECK VALVE....22
VACUUM PUMP 23
Removal....23
Installation....24
Inspection....24
Component 25
Disassembly....25
Assembly 25
FRONT DISC BRAKE 27
Component 27
Pad Replacement 27
Removal....28
Disassembly....28
Inspection....28
CALIPER....28
ROTOR....29
Assembly 30
Installation....30
REAR DRUM BRAKE 31
Components....31
Removal....31
Inspection - Wheel Cylinder 32
Wheel Cylinder Overhaul....33
Inspection - Drum 33
Inspection - Lining 33
Installation....33

CONTENTS (Cont'd)

REAR DISC BRAKE (CAM & STRUT TYPE) 35
Component 35
Pad Replacement 35
Removal 37
Disassembly 37
Inspection 38
CALIPER 38
ROTOR 39
Assembly 39
Installation 42
REAR DISC BRAKE (BALL & RAMP TYPE) 43
Component 43
Pad Replacement 43
Removal 45
Disassembly 45
Inspection 45
CALIPER 45
ROTOR 46
Installation 46
PARKING BRAKE CONTROL 47
Components 47
Removal and Installation 47
Inspection 47
Adjustment 48

ABS

DESCRIPTION 49
Purpose 49
ABS (Anti-Lock Brake System) Operation 49
ABS Hydraulic Circuit 49
System Components 50
System Description 50
SENSOR 50
CONTROL UNIT 50
ABS ACTUATOR AND ELECTRIC UNIT 50
Component Parts and Harness Connector Location 52
Schematic/Sedan 53
Wiring Diagram - ABS -/Sedan 54
Schematic/Hatchback 58
Wiring Diagram - ABS -/Hatchback 59
MODELS WITH SELF-DIAGNOSIS FUNCTION (DATA LINK CONNECTOR TERMINAL NO. 9) 59
MODELS WITHOUT SELF-DIAGNOSIS FUNCTION (DATA LINK CONNECTOR TERMINAL NO. 9) 60
ON BOARD DIAGNOSTIC SYSTEM DESCRIPTION 63
Self-diagnosis (Only Models with Data Link Connector Terminal No. 9) 63
FUNCTION 63
SELF-DIAGNOSIS PROCEDURE 63
HOW TO READ SELF-DIAGNOSTIC RESULTS (MALFUNCTION CODES) 64
HOW TO ERASE SELF-DIAGNOSTIC RESULTS (MALFUNCTION CODES) 64
CONSULT-II 65
CONSULT-II APPLICATION TO ABS 65
ECU (ABS CONTROL UNIT) PART NUMBER MODE 65
CONSULT-II Inspection Procedure 65
SELF-DIAGNOSIS PROCEDURE 65
SELF-DIAGNOSTIC RESULTS MODE 67
DATA MONITOR PROCEDURE 68
ACTIVE TEST PROCEDURE 69
DATA MONITOR MODE 70
ACTIVE TEST MODE 70
TROUBLE DIAGNOSIS - INTRODUCTION 71
How to Perform Trouble Diagnoses for Quick and Accurate Repair 71
INTRODUCTION 71
TROUBLE DIAGNOSIS - BASIC INSPECTION 72
Preliminary Check 72
Ground Circuit Check 75
ABS ACTUATOR AND ELECTRIC UNIT GROUND 75
TROUBLE DIAGNOSIS - GENERAL DESCRIPTION 76
Malfunction Code/Symptom Chart 76
MODELS WITH SELF-DIAGNOSIS FUNCTION (DATA LINK CONNECTOR TERMINAL NO. 9) 76
TROUBLE DIAGNOSES FOR SELF-DIAGNOSTIC ITEMS 78
Wheel Sensor or Rotor 78
DIAGNOSTIC PROCEDURE 78
ABS Actuator Solenoid Valve or Solenoid Valve Relay 81
DIAGNOSTIC PROCEDURE 81
Motor Relay or Motor 84
DIAGNOSTIC PROCEDURE 84
Low Voltage 86
DIAGNOSTIC PROCEDURE 86
Control Unit 88
DIAGNOSTIC PROCEDURE 88
TROUBLE DIAGNOSES FOR SYMPTOMS 89
1. ABS Works Frequently 89
2. Unexpected Pedal Action 89
3. Long Stopping Distance 90
4. ABS Does Not Work 91
5. Pedal Vibration and Noise 92
6. ABS Warning Lamp Does Not Come On When Ignition Switch Is Turned On 93
7. ABS Warning Lamp Stays On When Ignition Switch Is Turned On 95
REMOVAL AND INSTALLATION 97
Wheel Sensors 97
ABS Actuator and Electric Unit 98

CONTENTS (Cont'd)

REMOVAL.....98
INSTALLATION.....98
Sensor Rotor.....99
REMOVAL.....99
INSTALLATION.....99

SERVICE DATA AND SPECIFICATIONS (SDS).....100
General Specifications.....100

Disc Brake 101
Drum Brake.....101
Brake Pedal 101
Parking Brake 101

Supplemental Restraint System (SRS) "AIR BAG" and "SEAT BELT PRE-TENSIONER"

NJBR0139

The Supplemental Restraint System such as "AIR BAG" and "SEAT BELT PRE-TENSIONER" used along with a seat belt, helps to reduce the risk or severity of injury to the driver and front passenger for certain types of collision. The SRS system composition which is available to NISSAN MODEL N16 is as follows (The composition varies according to the destination and optional equipment.):

- For a frontal collision
  The Supplemental Restraint System consists of driver air bag module (located in the center of the steering wheel), front passenger air bag module (located on the instrument panel on passenger side), front seat belt pre-tensioners, a diagnosis sensor unit, warning lamp, wiring harness and spiral cable.
- For a side collision
  The Supplemental Restraint System consists of front side air bag module (located in the outer side of front seat), side air bag (satellite) sensor, diagnosis sensor unit (one of components of air bags for a frontal collision), wiring harness, warning lamp (one of components of air bags for a frontal collision).

Information necessary to service the system safely is included in the **RS section** of this Service Manual.

WARNING:

- **To avoid rendering the SRS inoperative, which could increase the risk of personal injury or death in the event of a collision which would result in air bag inflation, all maintenance should be performed by an authorized NISSAN dealer.**
- **Improper maintenance, including incorrect removal and installation of the SRS, can lead to personal injury caused by unintentional activation of the system. For removal of Spiral Cable and Air Bag Module, see the RS section.**
- **Do not use electrical test equipment on any circuit related to the SRS unless instructed to in this Service Manual. SRS wiring harnesses can be identified by yellow harness connector.**

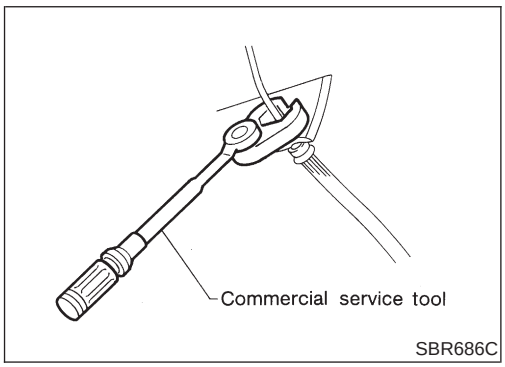

Precautions for Brake System

NJBR0002

- **Recommended fluid is brake fluid "DOT 4".**
- **Never reuse drained brake fluid.**
- **Be careful not to splash brake fluid on painted areas.**
- **To clean or wash all parts of master cylinder, disc brake caliper and wheel cylinder, use clean brake fluid.**
- **Never use mineral oils such as gasoline or kerosene. They will ruin rubber parts of the hydraulic system.**
- **Use flare nut wrench when removing and installing brake tube.**
- **Always torque brake lines when installing.**
- **Burnish the brake contact surfaces after refinishing or replacing drums or rotors, after replacing pads or linings, or if a soft pedal occurs at very low mileage.**
  Refer to "Brake Burnishing Procedure", "ON-VEHICLE SERVICE", BR-8.

WARNING:

- **Clean brake pads and shoes with a waste cloth, then wipe with a dust collector.**

Precautions When Working On ABS

NJBR0140

- **Use recommended tyres in combination with ABS.**
- **Please fit tyres or studded tyres, etc. with the same size.**
- **If different sizes of tyres, or tyres other than the ones recommended for use with the ABS, are fitted, stopping distance will increase and control and stability could deteriorate.**
- **When changing brake pads, please use Nissan genuine parts.**
- **When fitting radios etc, do not position the radio itself, antenna, or antenna cables within an area of about 100 mm (3.94 in) of the control unit.**
- **When doing any work that requires electro-welding, first remove the control unit.**
- **Please take care when taking a power supply for the audio, lamps etc., not to take this from any ABS-related harness. (Please refer to the electrical wiring diagrams for ABS-related harnesses)**

Wiring Diagrams and Trouble Diagnosis

NJBR0003

When you read wiring diagrams, refer to the following:

- GI-11, “HOW TO READ WIRING DIAGRAMS”
- EL-10, “POWER SUPPLY ROUTING”

When you perform trouble diagnosis, refer to the following:

- GI-31, “HOW TO FOLLOW TEST GROUPS IN TROUBLE DIAGNOSES”
- GI-21, “HOW TO PERFORM EFFICIENT DIAGNOSIS FOR AN ELECTRICAL INCIDENT”
- On board self-diagnosis is available everywhere except for Europe.

Commercial Service Tools

NJBR0004

Tool name	Description	
1 Flare nut crowfoot 2 Torque wrench	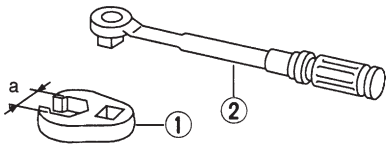 NT360	Removing and installing each brake piping **a: 10 mm (0.39 in)**
Brake fluid pressure gauge	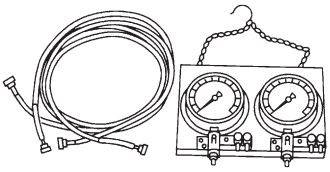 NT151	Measuring brake fluid pressure

NVH Troubleshooting Chart

NJBR0005S01

Use the table below to help you find the cause of the symptom. If necessary, repair or replace these parts.

Reference page			BR-27, 33, 35	BR-27, 33, 35	BR-31	BR-27, 35	—	—	BR-29, 39	—	—	—	BR-29, 39	BR-33	NVH in FA section	NVH in FA section	NVH in FA, RA section	NVH in FA section	NVH in ST section
SUSPECTED PARTS (Possible cause)			Linings or pads - damaged	Linings or pads - uneven wear	Return springs damaged	Shims damaged	Rotor or drum imbalance	Rotor or drum damage	Rotor runout	Rotor or drum deformation	Rotor or drum deflection	Rotor or drum rust	Rotor thickness variation	Drum out of round	DRIVE SHAFT	AXLE AND SUSPENSION	TIRES	ROAD WHEEL	STEERING
Symp-tom	BRAKE	Noise	X	X	X	X									X	X	X	X	X
		Shake					X								X	X	X	X	X
		Shimmy, Jud-der					X	X	X	X	X	X	X	X		X	X	X	X

X: Applicable

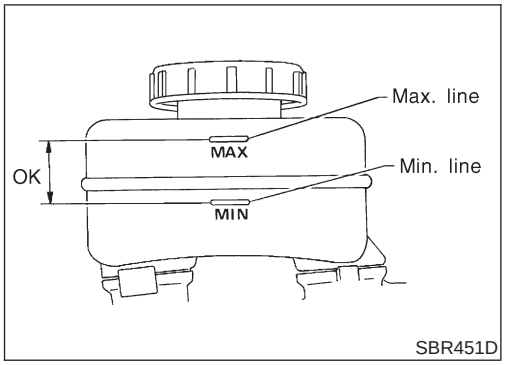

SBR451D

Checking Brake Fluid Level

NJBR0006

- Check fluid level in reservoir tank. It should be between Max and Min lines on reservoir tank.
- If fluid level is extremely low, check brake system for leaks.
- Release parking brake lever and see if brake warning lamp goes off. If not, check brake system for leaks.

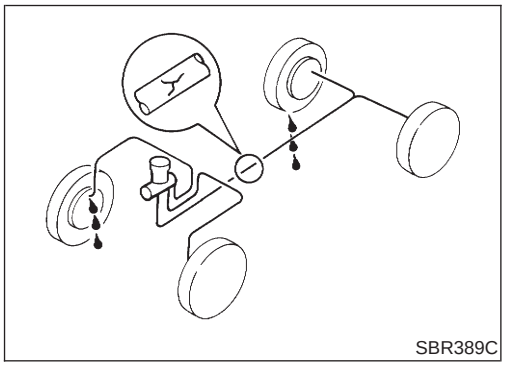
SBR389C

Checking Brake Line

NJBR0007

CAUTION:

If leakage occurs around joints, retighten or, if necessary, replace damaged parts.

1. Check brake lines (tubes and hoses) for cracks, deterioration or other damage. Replace any damaged parts.
2. Check for oil leakage by fully depressing brake pedal while engine is running.

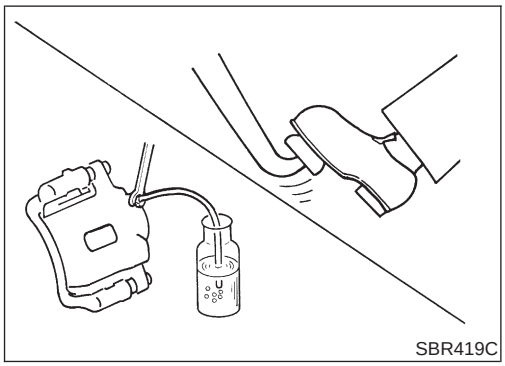
SBR419C

Changing Brake Fluid

NJBR0008

CAUTION:

- **Refill with new brake fluid “DOT 4”.**
- **Always keep fluid level higher than minimum line on reservoir tank.**
- **Never reuse drained brake fluid.**
- **Be careful not to splash brake fluid on painted areas; it may cause paint damage. If brake fluid is splashed on painted areas, wash it away with water immediately.**

1. Clean inside of reservoir tank, and refill with new brake fluid.
2. Connect a vinyl tube to each air bleeder valve.
3. Drain brake fluid from each air bleeder valve by depressing brake pedal while keeping reservoir level higher than minimum line by adding new brake fluid.
4. Repeat until new brake fluid comes out of each air bleeder valve.
   Use same procedure as in bleeding hydraulic system to refill brake fluid. Refer to “Bleeding Brake System”, BR-9.

Brake Burnishing Procedure

NJBR0036

Burnish the brake contact surfaces according to the following procedure after refinishing or replacing drums or rotors, after replacing pads or linings, or if a soft pedal occurs at very low mileage.

CAUTION:

Only perform this procedure under safe road and traffic conditions. Use extreme caution.

1. Drive the vehicle on a straight smooth road at 50 km/h (31 MPH).
2. Use medium brake pedal/foot effort to bring the vehicle to a complete stop from 50 km/h (31 MPH). Adjust brake pedal/foot

pressure such that vehicle stopping time equals 3 to 5 seconds.

3. To cool the brake system, drive the vehicle at 50 km/h (31 MPH) for 1 minute without stopping.
4. Repeat steps 1 to 3, 10 times or more to complete the burnishing procedure.

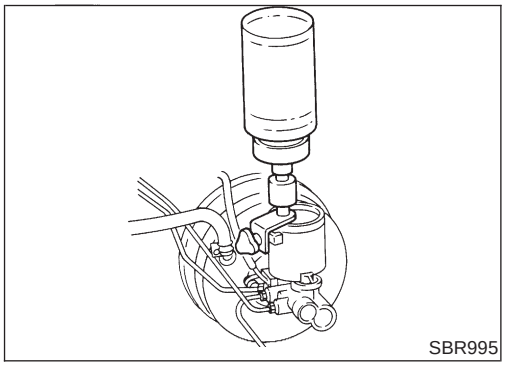

SBR995

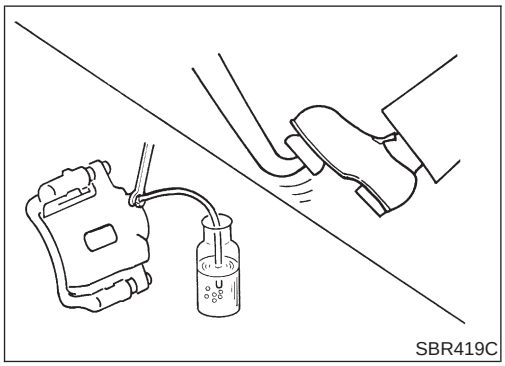

SBR419C

Bleeding Brake System

NJBR0009

CAUTION:

- **Carefully monitor brake fluid level at master cylinder during bleeding operation.**
- **Fill reservoir with new brake fluid "DOT 4". Make sure it is full at all times while bleeding air out of system.**
- **Place a container under master cylinder to avoid spillage of brake fluid.**
- **For models with ABS, turn ignition switch OFF and disconnect ABS actuator connectors or battery ground cable.**

- Bleed air in the following order.
  Right rear brake → Left front brake → Left rear brake → Right front brake

1. Connect a transparent vinyl tube to air bleeder valve.
2. Fully depress brake pedal several times.
3. With brake pedal depressed, open air bleeder valve to release air.
4. Close air bleeder valve.
5. Release brake pedal slowly.
6. Repeat steps 2. through 5. until clear brake fluid comes out of air bleeder valve.

Hydraulic Circuit

NJBR0010

With ABS models

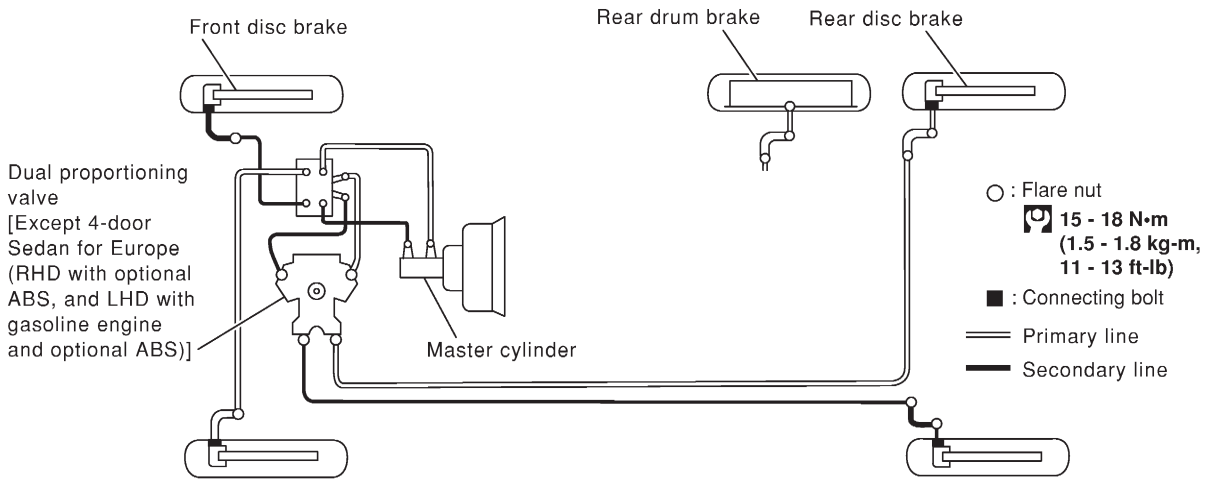

Without ABS models

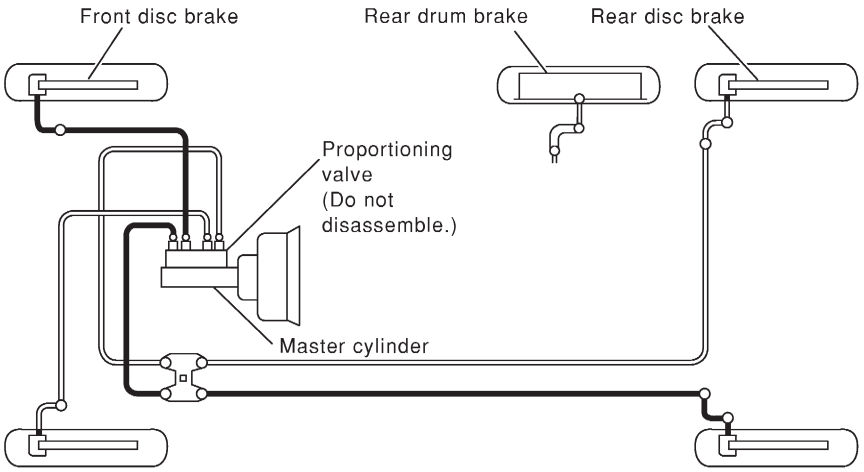

SBR751E

Removal

NJBR0011

CAUTION:

- **Be careful not to splash brake fluid on painted areas; it may cause paint damage. If brake fluid is splashed on painted areas, wash it away with water immediately.**
- **All hoses must be free from excessive bending, twisting and pulling.**
- **For ball & ramp type rear caliper, care should be taken as not to let air enter the body.**

1. Remove flare nut connecting brake tube and hose, then withdraw lock spring.

2. Cover openings to prevent entrance of air and dirt whenever disconnecting brake line.

Inspection

NJBR0012

Check brake lines (tubes and hoses) for cracks, deterioration or other damage. Replace any damaged parts.

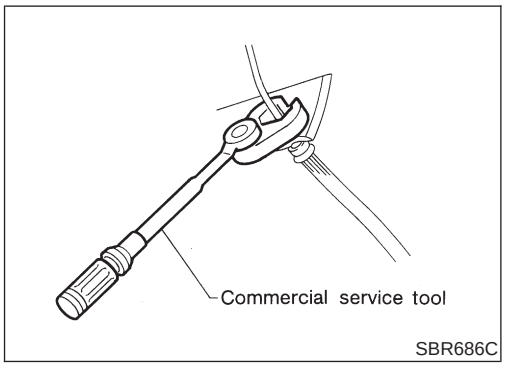

Installation

NJBR0013

CAUTION:

- **Refill with new brake fluid “DOT 3 or DOT 4”.**
- **Never reuse drained brake fluid.**

1. Tighten all flare nuts and connecting bolts.

   Specification:

   Flare nut

   15 - 18 N·m (1.5 - 1.8 kg-m, 11 - 13 ft-lb)

   Connecting bolt

   17 - 20 N·m (1.7 - 2.0 kg-m, 12 - 14 ft-lb)

2. Refill until new brake fluid comes out of each air bleeder valve.
3. Bleed air. Refer to “Bleeding Brake System”, BR-9.

Removal and Installation

NJBR0015

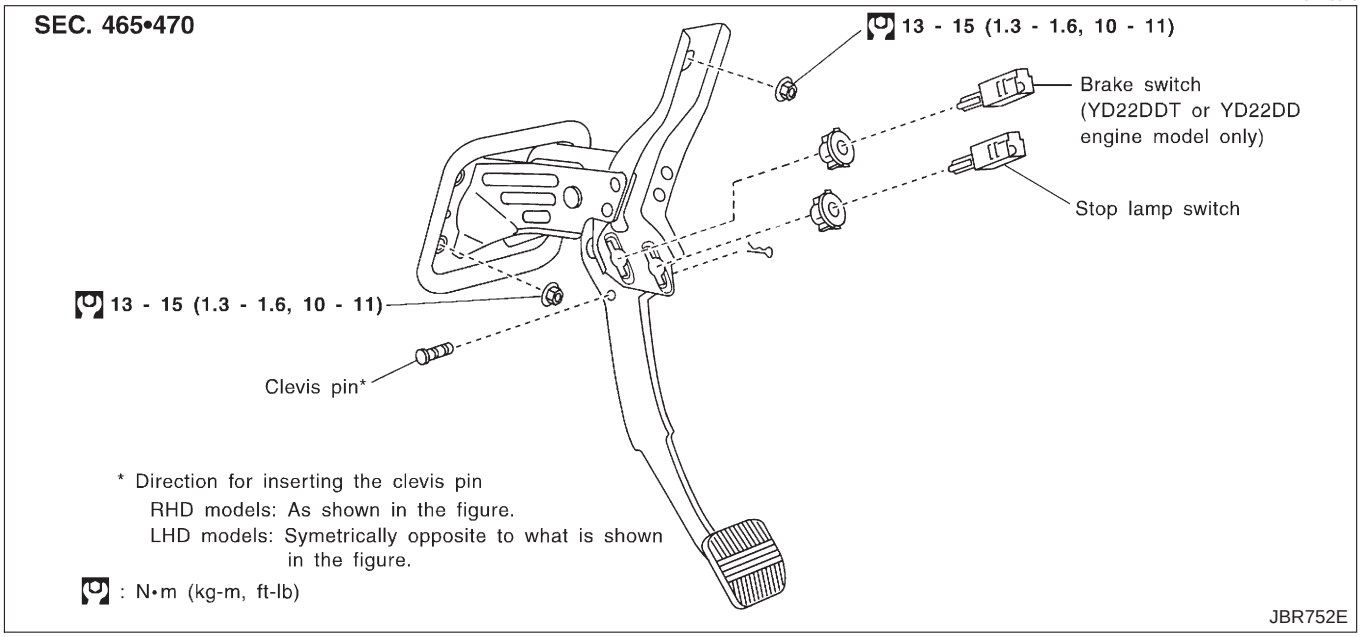

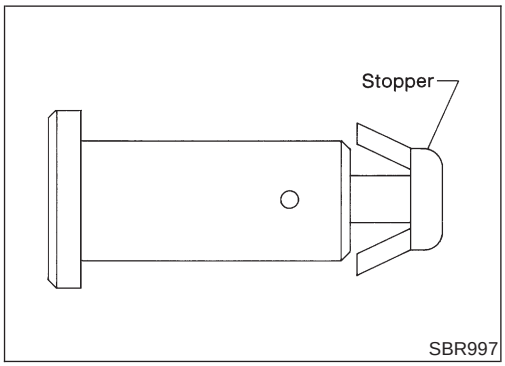

Inspection

NJBR0016

Check brake pedal for following items.

- Brake pedal bend
- Clevis pin deformation
- Crack of any welded portion
- Crack or deformation of clevis pin stopper

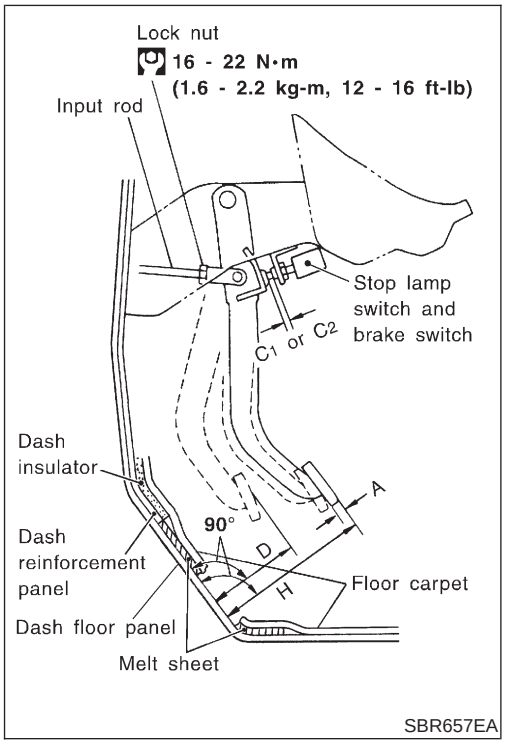

Adjustment

NJBR0017

Check brake pedal free height from metal panel. Adjust if necessary.

H: Free height

Refer to SDS, BR-101.

C_1, C_2: Clearance between pedal stopper and threaded end of stop lamp switch and brake switch

0.74 - 1.96 mm (0.0291 - 0.0772 in)

D: Depressed height

LHD (M/T): More than 90 mm (3.54 in)

LHD (A/T): More than 95 mm (3.74 in)

RHD (M/T): More than 90 mm (3.54 in)

RHD (A/T): More than 95 mm (3.74 in)

Under force of 490 N (50 kg, 110 lb) with engine running

A: Pedal free play at pedal pad

1.0 - 3.0 mm (0.039 - 0.118 in)

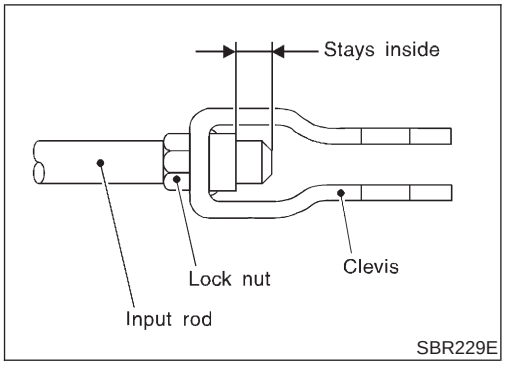

1. Loosen lock nut and adjust pedal free height by turning brake booster input rod. Then tighten lock nut.
2. Check pedal free play.
   Make sure that stop lamps go off when pedal is released.
3. Check brake pedal's depressed height while engine is running. If lower than specification, check brake system for leaks, accumulation of air or any damage to components (master cylinder, wheel cylinder, etc.); then make necessary repairs.

Removal

NJBR0112

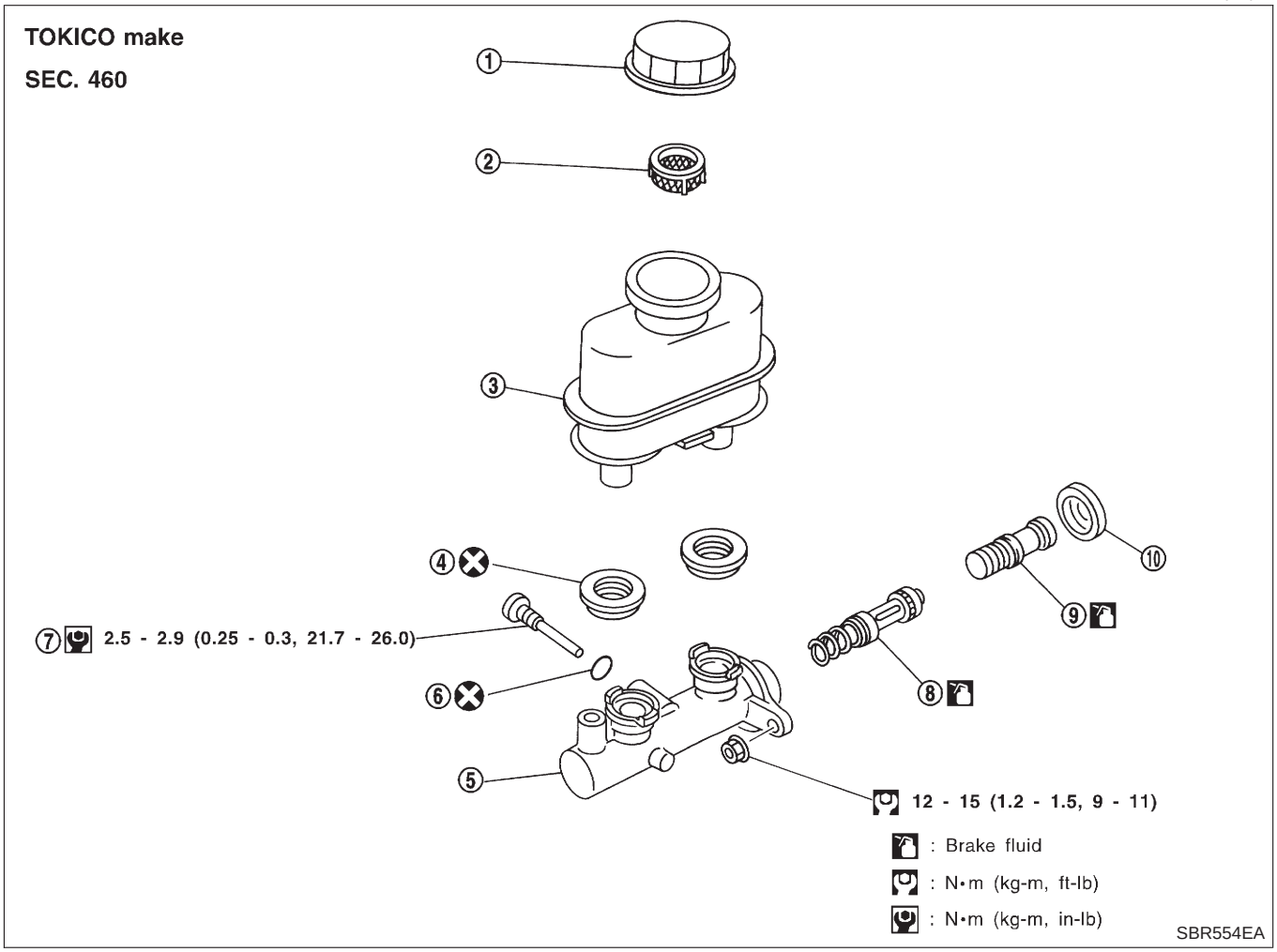

1. Reservoir cap
2. Oil filter
3. Reservoir tank
4. Seal
5. Cylinder body
6. O-ring
7. Piston stopper
8. Secondary piston assembly
9. Primary piston assembly
10. Stopper cap

CAUTION:

Be careful not to splash brake fluid on painted areas; it may cause paint damage. If brake fluid is splashed on painted areas, wash it away with water immediately.

1. Connect a vinyl tube to front caliper air bleeder valve.
2. Drain brake fluid from each front caliper air bleeder valve, depressing brake pedal to empty fluid from master cylinder.
3. Remove brake pipe flare nuts.
4. Remove master cylinder mounting nuts.

Disassembly

NJBR0113

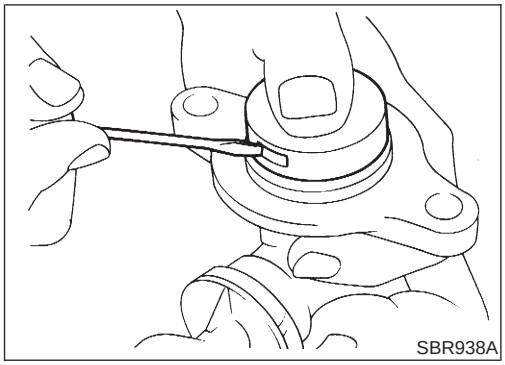

1. Bend claws of stopper cap outward and remove stopper cap.

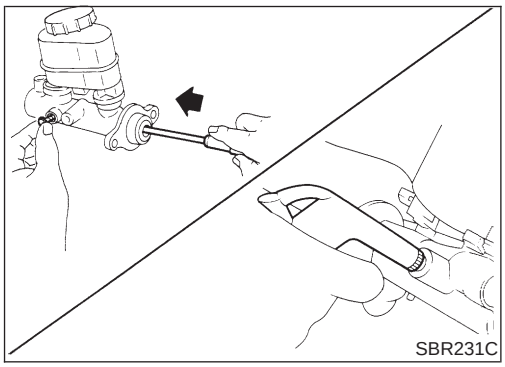

2. Remove valve stopper while piston is pushed into cylinder.
3. Remove piston assemblies.
   If it is difficult to remove secondary piston assembly, gradually apply compressed air through fluid outlet.
4. Draw out reservoir tank.

Inspection

NJBR0114

Check for the following items.
Replace any part if damaged.
Master cylinder:

- Pin holes or scratches on inner wall.

Piston:

- Deformation of or scratches on piston cups.

Assembly

NJBR0115

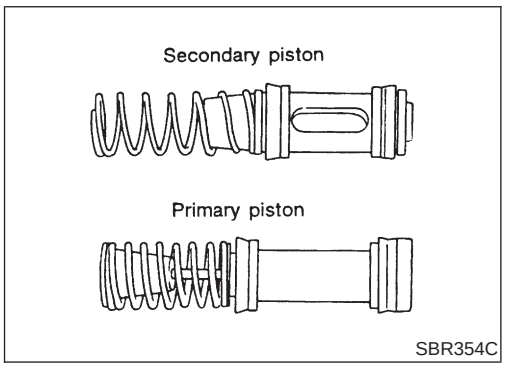

1. Insert secondary piston assembly. Then insert primary piston assembly.
   - Pay attention to alignment of secondary piston slit with valve stopper mounting hole of cylinder body.

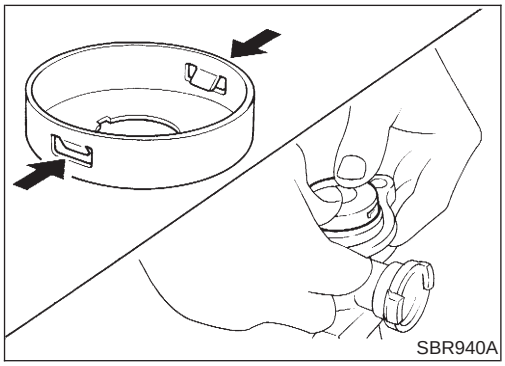

2. Install stopper cap.
   Before installing stopper cap, ensure that claws are bent inward.
3. Push reservoir tank seals into cylinder body.
4. Push reservoir tank into cylinder body.

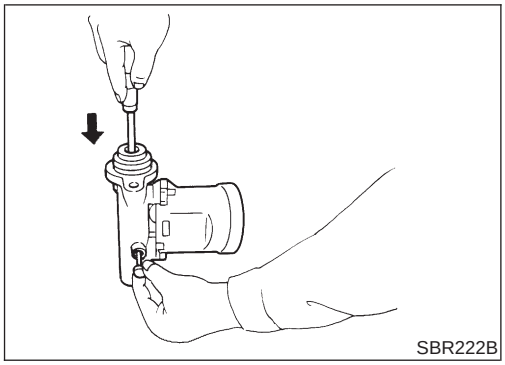
SBR222B

5. Install valve stopper while piston is pushed into cylinder.

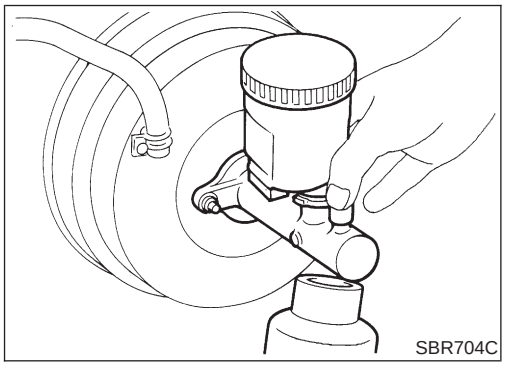
SBR704C

Installation

NJBR0116

CAUTION:

- **Refill with new brake fluid "DOT 4".**
- **Never reuse drained brake fluid.**

1. Place master cylinder onto brake booster and secure mounting nuts lightly.
2. Torque mounting nuts.
   : 12 - 15 N·m (1.2 - 1.5 kg-m, 9 - 11 ft-lb)
3. Fill up reservoir tank with new brake fluid.
4. Plug all ports on master cylinder with fingers to prevent air suction while releasing brake pedal.
5. Have driver depress brake pedal slowly several times until no air comes out of master cylinder.
6. Fit brake lines to master cylinder.
7. Tighten flare nuts.
   : 15 - 18 N·m (1.5 - 1.8 kg-m, 11 - 13 ft-lb)
8. Bleed air from brake system. Refer to "Bleeding Brake System", BR-9.

Removal

NJBR0117

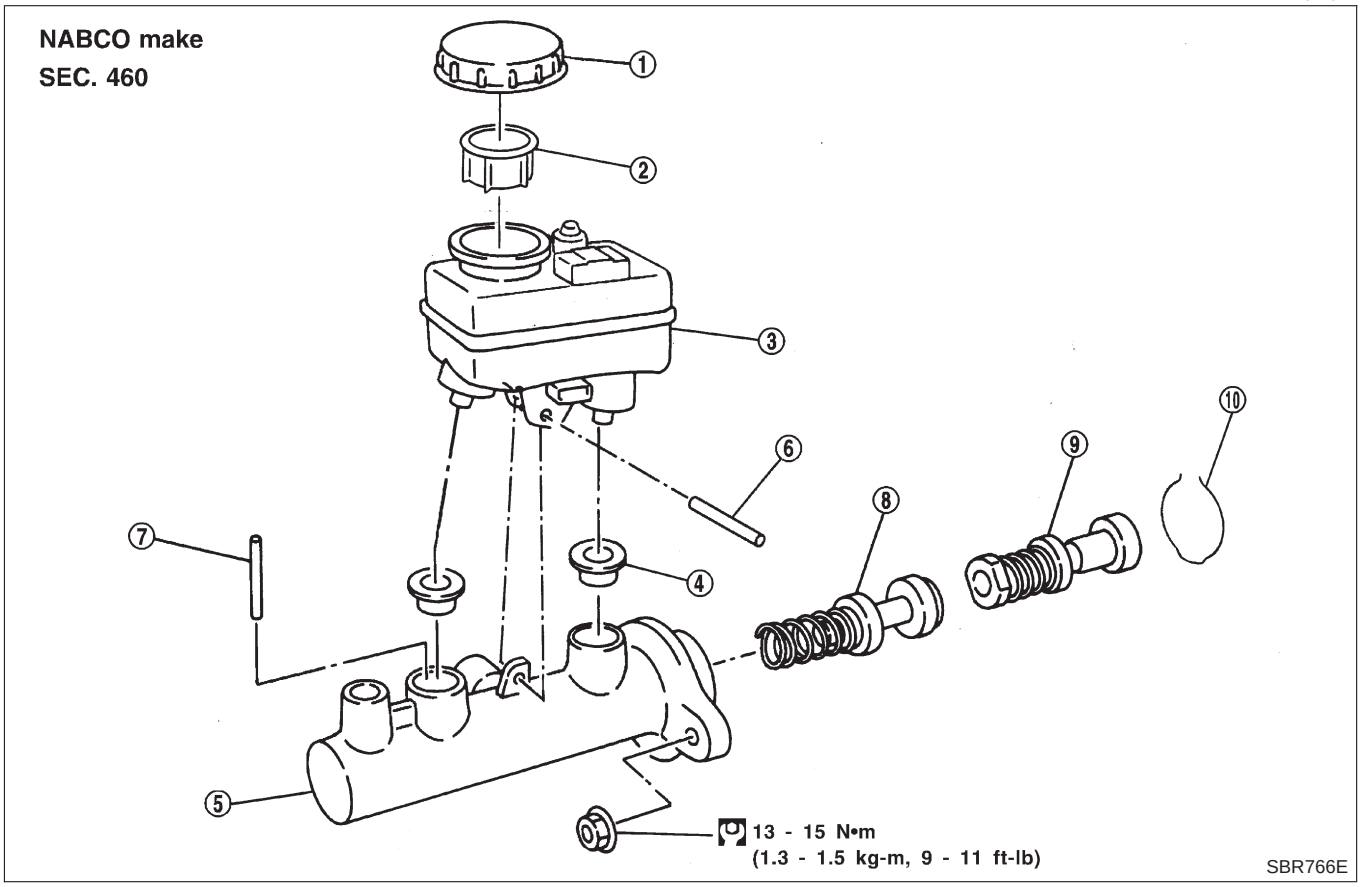

1. Reservoir cap
2. Oil filter
3. Reservoir tank
4. Seal
5. Cylinder body
6. Elastic pin
7. Piston stopper pin
8. Secondary piston assembly
9. Primary piston assembly
10. Circlip

CAUTION:

Be careful not to splash brake fluid on painted areas; it may cause paint damage. If brake fluid is splashed on painted areas, wash it away with water immediately.

1. Connect a vinyl tube to front caliper air bleeder valve.
2. Drain brake fluid from each front caliper air bleeder valve, depressing brake pedal to empty fluid from master cylinder.
3. Remove brake pipe flare nuts.
4. Remove master cylinder mounting nuts.

Disassembly

NJBR0118

1. Remove the circlip.

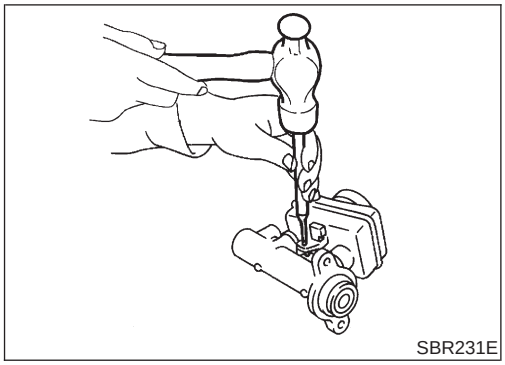
SBR231E

2. Drive out elastic pin from cylinder body.
3. Remove reservoir tank and seals.

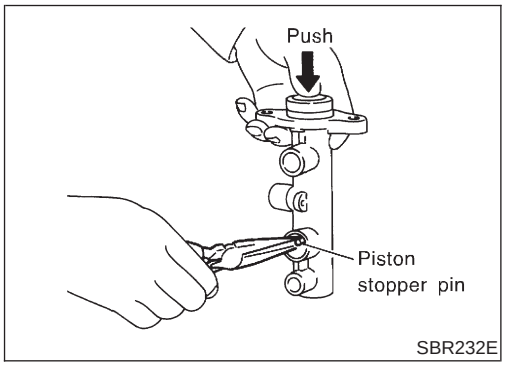

SBR232E

4. Remove piston stopper pin while piston is pushed into cylinder.
5. Remove piston assemblies.
   If it is difficult to remove secondary piston assembly, gradually apply compressed air through fluid outlet.

Inspection

NJBR0119

Check for the following items.
Replace any part if damaged.
Master cylinder:

- Pin holes or scratches on inner wall.

Piston:

- Deformation of or scratches on piston cups.

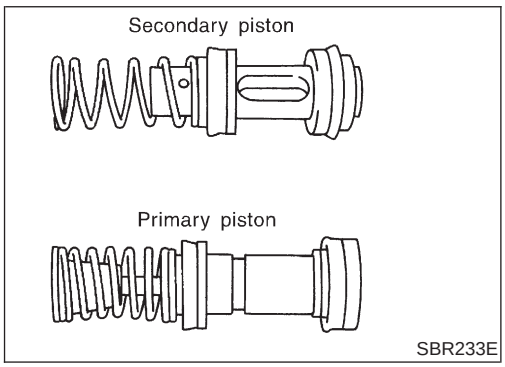

SBR233E

Assembly

NJBR0120

1. Insert secondary piston assembly. Then insert primary piston assembly.

- **Pay attention to alignment of secondary piston slit with valve stopper mounting hole of cylinder body.**

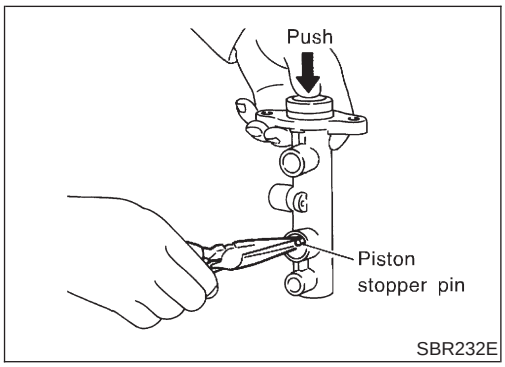

SBR232E

2. Install piston stopper pin while piston is pushed into cylinder. Then secure the primary and secondary piston assemblies with circlip.
3. Push reservoir tank seals and reservoir tank into cylinder body.
4. Install elastic pin.

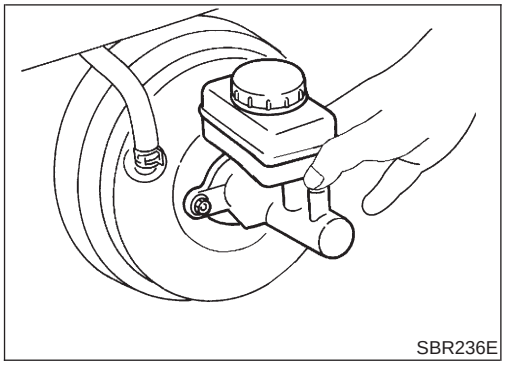

Installation

NJBR0121

CAUTION:

- **Refill with new brake fluid “DOT 4”.**
- **Never reuse drained brake fluid.**

1. Place master cylinder onto brake booster and secure mounting nuts lightly.
2. Torque mounting nuts.
   : 13 - 15 N·m (1.3 - 1.5 kg-m, 9 - 11 ft-lb)
3. Fill up reservoir tank with new brake fluid.
4. Plug all ports on master cylinder with fingers to prevent air suction while releasing brake pedal.
5. Have driver depress brake pedal slowly several times until no air comes out of master cylinder.
6. Fit brake lines to master cylinder.
7. Tighten flare nuts.
   : 15 - 18 N·m (1.5 - 1.8 kg-m, 11 - 13 ft-lb)
8. Bleed air from brake system.

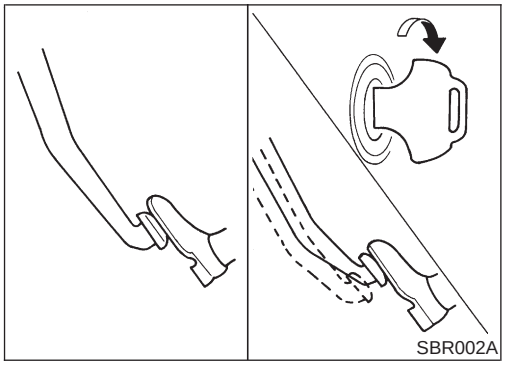

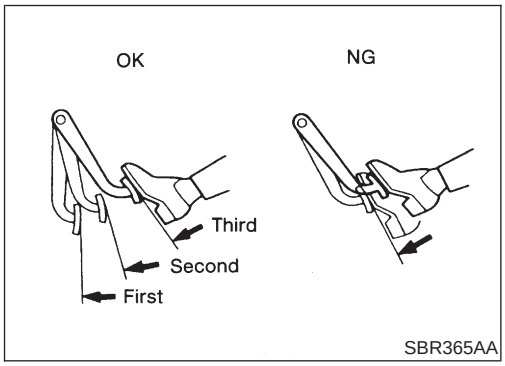

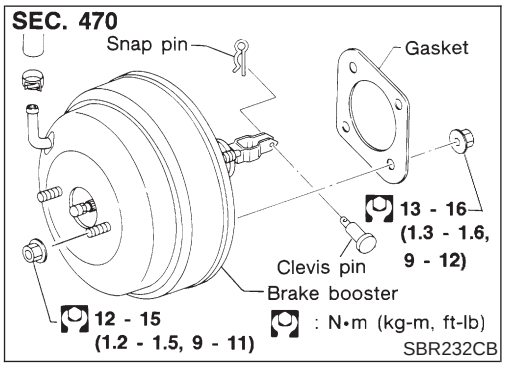

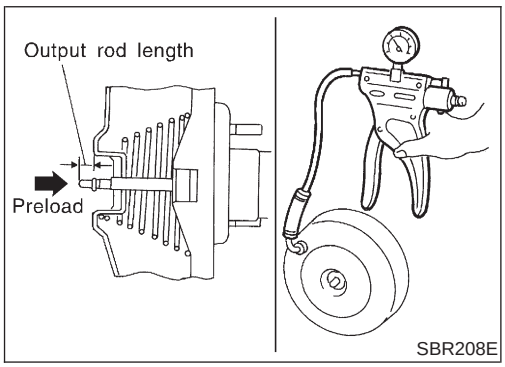

On-vehicle Service

NJBR0023

OPERATING CHECK

NJBR0023S01

1. Stop engine and depress brake pedal several times. Check that pedal stroke does not change.
2. Depress brake pedal, then start engine. If pedal goes down slightly, operation is normal.

AIRTIGHT CHECK

NJBR0023S02

1. Start engine, and stop it after one or two minutes. Depress brake pedal several times slowly. The pedal should go further down the first time, and then it should gradually rise thereafter.
2. Depress brake pedal while engine is running, and stop engine with pedal depressed. The pedal stroke should not change after holding pedal down for **30 seconds.**

Removal

NJBR0024

CAUTION:

- **Be careful not to splash brake fluid on painted areas; it may cause paint damage. If brake fluid is splashed on painted areas, wash it away with water immediately.**
- **Be careful not to deform or bend brake pipes, during removal of booster.**

Inspection

NJBR0025

OUTPUT ROD LENGTH CHECK

NJBR0025S01

1. Apply vacuum of −66.7 kPa (−667 mbar, −500 mmHg, −19.69 inHg) to brake booster with a handy vacuum pump.
2. Add preload of 19.6 N (2 kg, 4.4 lb) to output rod.
3. Check output rod length.

   Specified length:

   10.275 - 10.525 mm (0.4045 - 0.4144 in)

Installation

NJBR0026

CAUTION:

- **Be careful not to deform or bend brake pipes, during installation of booster.**
- **Replace clevis pin if damaged.**
- **Refill with new brake fluid “DOT 3 or DOT 4”.**
- **Never reuse drained brake fluid.**
- **Take care not to damage brake booster mounting bolt thread when installing. Due to the acute angle of installation, the threads can be damaged with the dash panel.**

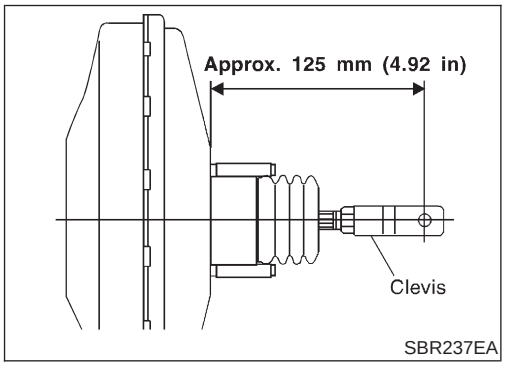

1. Before fitting booster, temporarily adjust clevis to dimension shown.
2. Fit booster, then secure mounting nuts (brake pedal bracket to master cylinder) lightly.
3. Connect brake pedal and booster input rod with clevis pin.
4. Secure mounting nuts.

   Specification:

   13 - 16 N·m (1.3 - 1.6 kg-m, 9 - 12 ft-lb)
5. Install master cylinder. Refer to “Installation” in “MASTER CYLINDER”, BR-16, 19.
6. Bleed air. Refer to “Bleeding Brake System”, BR-9.

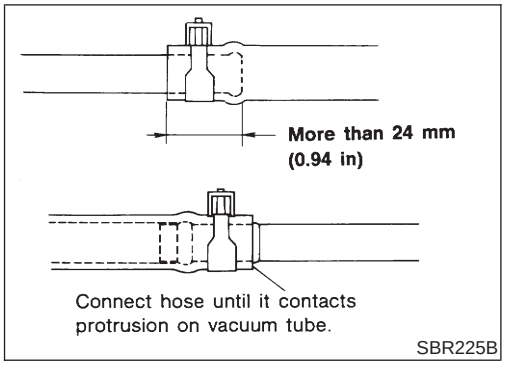

Removal and Installation

NJBR0027

CAUTION:

When installing vacuum hoses, pay attention to the following points.

- **Do not apply any oil or lubricants to vacuum hose and check valve.**
- **Insert vacuum tube into vacuum hose as shown.**
- **Install check valve, paying attention to its direction.**

Inspection

NJBR0028

HOSES AND CONNECTORS

NJBR0028S01

Check vacuum lines, connections and check valve for airtightness, improper attachment chafing and deterioration.

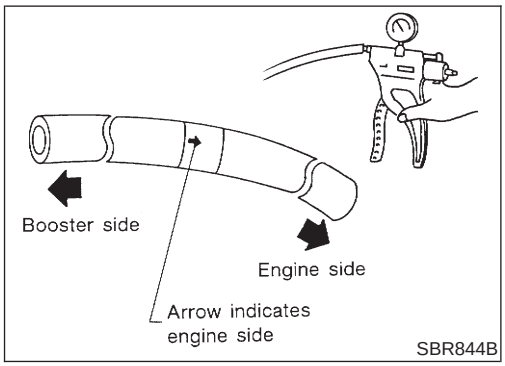

CHECK VALVE

NJBR0028S02

Check vacuum with a vacuum pump.

Connect to booster side	Vacuum should exist.
Connect to engine side	Vacuum should not exist.

Removal

NJBR0123

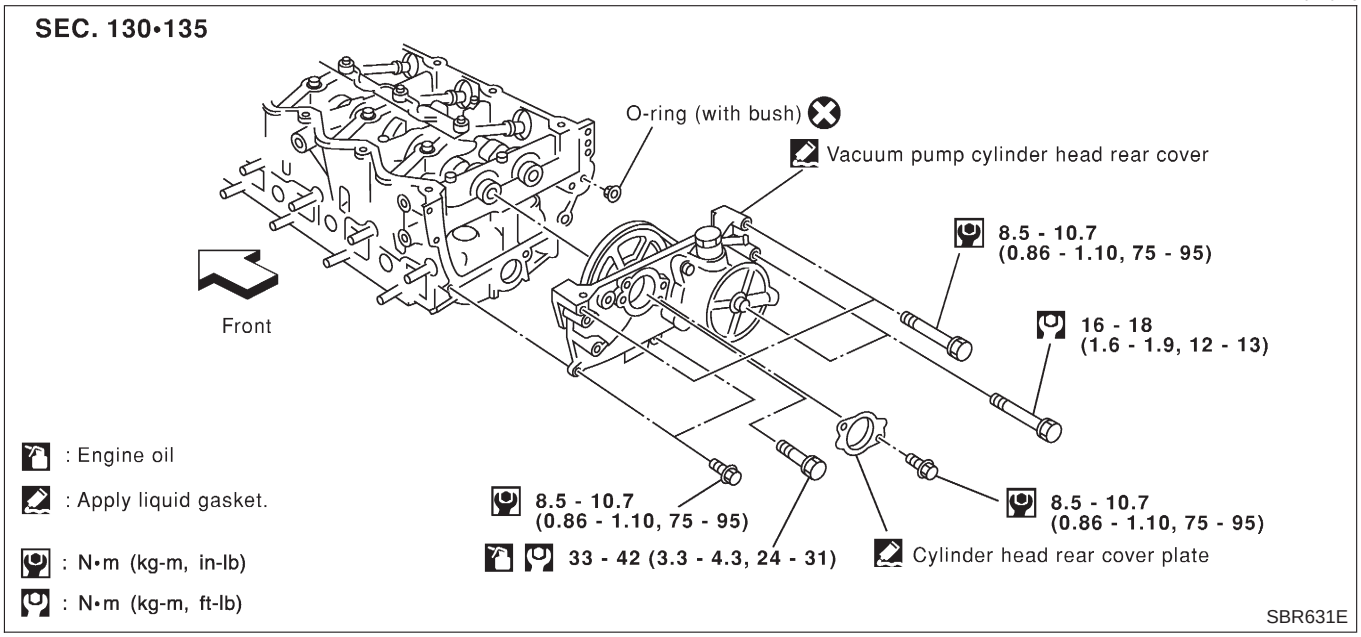

1. Remove parts shown below.
- Air duct, air cleaner case (upper)
- Engine cover
- Rocker cover
- Exhaust manifold cover
- EGR tube
2. Disconnect vacuum hose from vacuum pump.
3. Remove cylinder head rear cover plate.
- Use a tool such as seal cutter (SST) to remove.
4. Loosen and remove rear cam sprocket installation bolts.
- Camshaft should not be attached. Using engine inner resistance, loosen installation bolts.

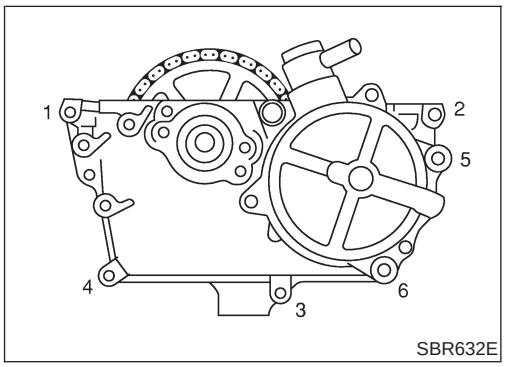

5. Remove vacuum pump and cylinder head rear cover assembly.
- Remove and install vacuum pump, sprocket, drive chain, and chain guide as an assembly.
- Loosen mounting bolts in the reverse order of the numbers shown in the figure to the left.
- Remove only bolts that are shown in the figure. (Be especially careful not to remove M6 bolts on the vacuum pump.)
- Use a tool such as a seal cutter (SST).

Installation

NJBR0124

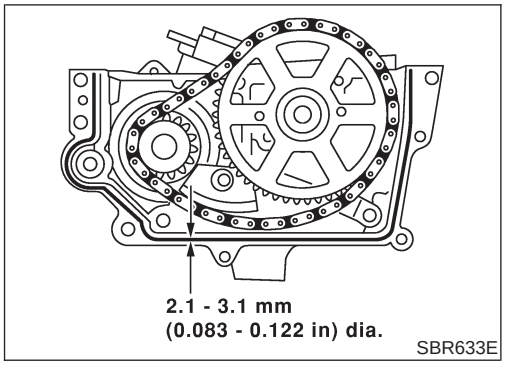

1. Assemble vacuum pump and cylinder head rear cover assembly, referring to “Component” in the next page.
2. Install vacuum pump and cylinder head rear cover assembly to cylinder head.

a. Apply ThreeBond 1207C (KP510 00150) without breaks to the location shown in the figure to the left.

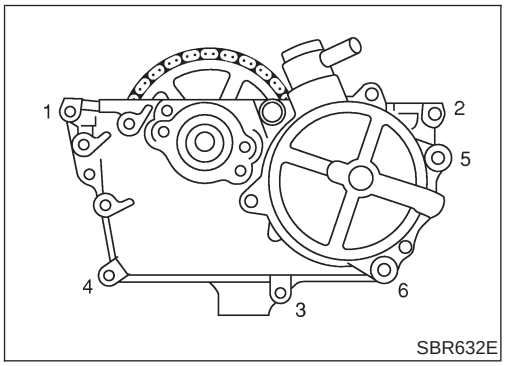

b. Tighten the mounting bolts in the numerical order shown by the figure to the left.

3. Install rear cam sprocket installation bolts.
4. Remove sprocket retaining two M6 bolts.

- M6 bolts will be used for installation.

5. Tighten rear cam sprocket installation bolts.

- Camshaft should not be fixed. Using engine inner resistance, tighten installation bolts.

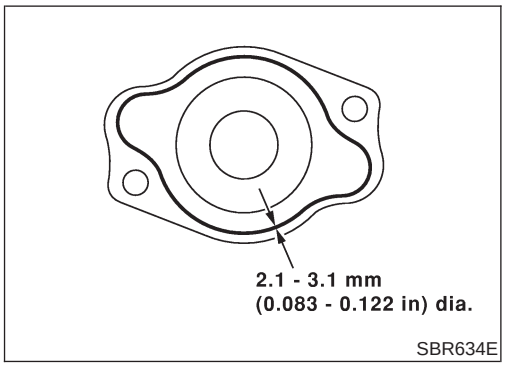

6. Install cylinder head rear cover plate.

- Apply ThreeBond 1207C (KP510 00150) without breaks to the location shown by the figure to the left.

7. Install parts in the reverse order of removal.

CAUTION:

If the engine is started with vacuum pump released (vacuum hose disconnected), it causes increase of blowby gas amount, and engine damage may result. When starting the engine, be sure to close vacuum circuit.

Inspection

NJBR0125

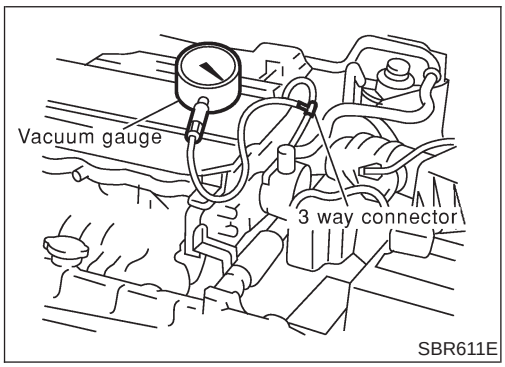

- Remove vacuum hose. Then, connect vacuum gauge with three-way connector.
- Install three-way connector to the area where vacuum pump negative pressure can be directly measured. (The figure shown an example.)
- Start the engine, then measure negative pressure.

  Standard: −86.6 to −101.3 kPa (−866 to −1,013 mbar, −650 to −760 mmHg, −25.59 to −29.92 inHg)
- If it is not within standard, inspect for suction of air in the middle of route and measure it again.
- If it is still not within standard value, replace the vacuum pump.

Component

NJBR0126

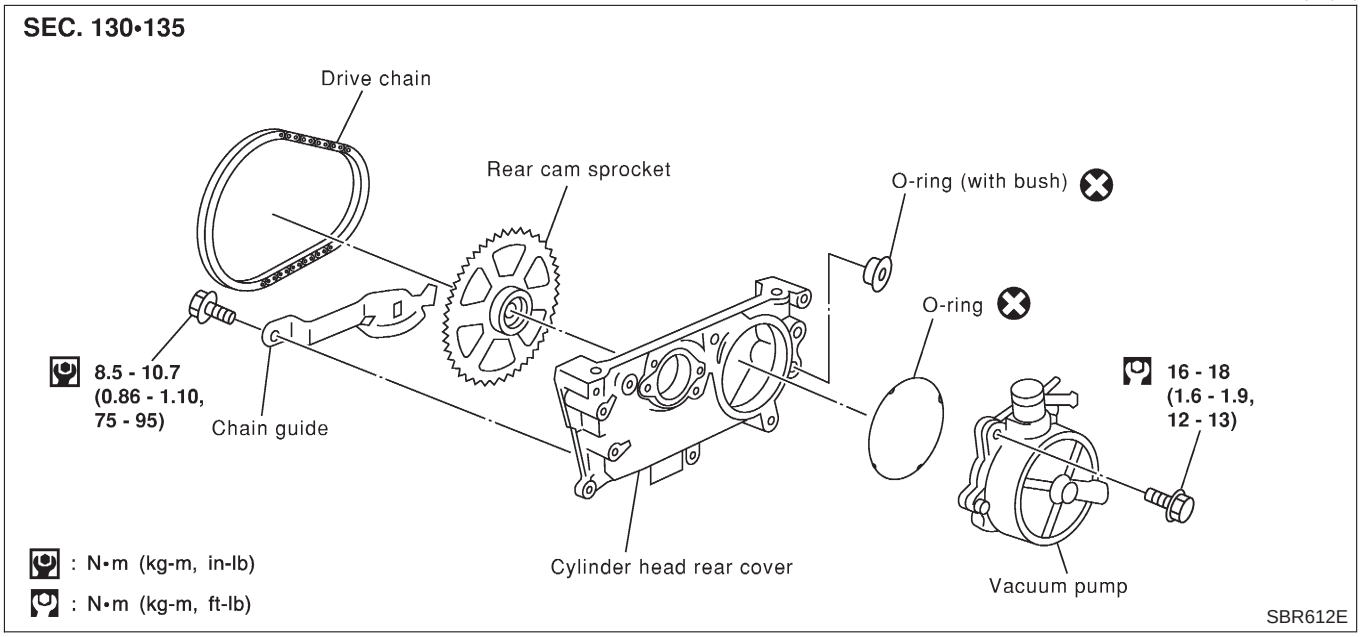

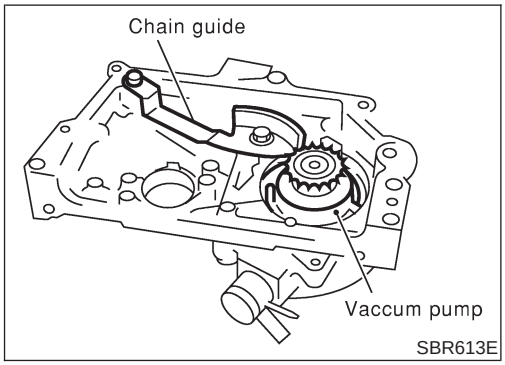

Disassembly

NJBR0136

Disassemble the components, referring to the “Component”, then remove vacuum pump.

CAUTION:

Do not disassemble vacuum pump. (Do not loosen three M6 bolts.)

Assembly

NJBR0127

Install all parts to cylinder head rear cover as follows.

1. Install vacuum pump.
2. Install chain guide temporarily.

- Adjust the chain guide position by the method explained in step 5.

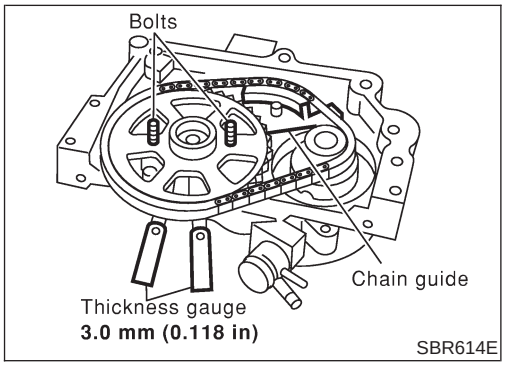

3. Install rear cam sprocket.

- Installation direction of sprocket is not specified.
- Insert 2 thickness gauges [3.0 mm (0.118 in)] between cover and rear cam sprocket (shown in the figure). Insert 2 bolts [M6, thread length: 35 - 40 mm (1.38 - 1.57 in)] into sprocket to retain it to cover.
- Use thickness gauges [3.0 mm (0.118 in)] for chain alignment between vacuum pump sprocket and cam sprocket.

4. Attach drive chain to rear cam sprocket and vacuum pump sprocket.
5. Tighten chain guide installation bolt while pressing chain guide

lightly [approximately 9.8 N (1.0 kg, 2.2 lb)].

6. Remove thickness gauges (2).

- Leave sprocket retaining bolts (M6) until installation.

Component

NJBR0030

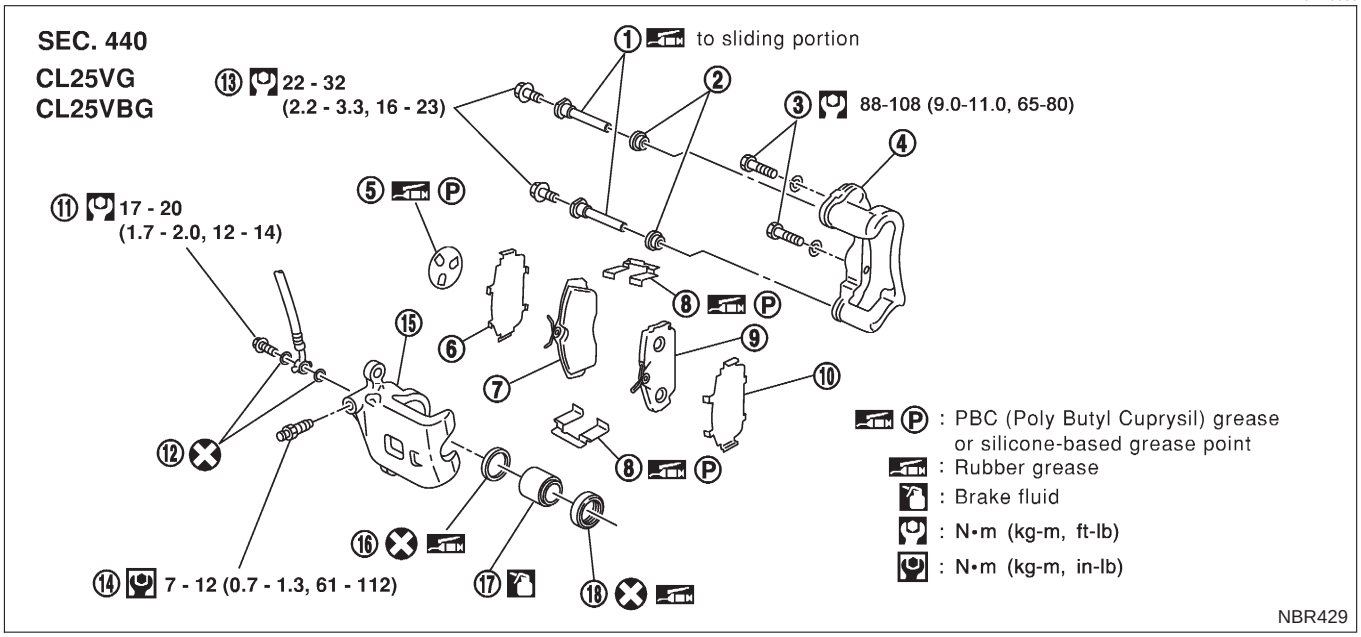

1. Main pin
2. Pin boot
3. Torque member fixing bolt
4. Torque member
5. Shim cover
6. Inner shim
7. Inner pad
8. Pad retainer
9. Outer pad
10. Outer shim
11. Connecting bolt
12. Copper washer
13. Main pin bolt
14. Bleed valve
15. Cylinder body
16. Piston seal
17. Piston
18. Piston boot

Pad Replacement

NJBR0029

WARNING:

Clean brake pads with a vacuum dust collector to minimize the hazard of airborne particles or other materials.

CAUTION:

- **When cylinder body is open, do not depress brake pedal because piston will pop out.**
- **Be careful not to damage piston boot or get oil on rotor. Always replace shims when replacing pads.**
- **If shims are rusted or show peeling of the rubber coat, replace them with new shims.**
- **It is not necessary to remove connecting bolt except for disassembly or replacement of caliper assembly. In this case, suspend cylinder body with wire so as not to stretch brake hose.**
- **Burnish the brake contact surfaces after refinishing or replacing drums or rotors, after replacing pads or linings, or if a soft pedal occurs at very low mileage.**
  Refer to “Brake Burnishing Procedure”, “ON-VEHICLE SERVICE”, BR-8.

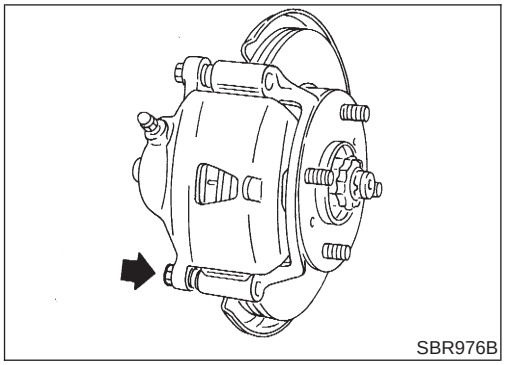
SBR976B

1. Remove master cylinder reservoir cap.
2. Remove pin bolt.
3. Open cylinder body upward. Then remove pad with retainers, inner and outer shims.

Standard pad thickness:
11 mm (0.43 in)
Pad wear limit:
2.0 mm (0.079 in)

Carefully monitor brake fluid level because brake fluid will return to reservoir when pushing back piston.

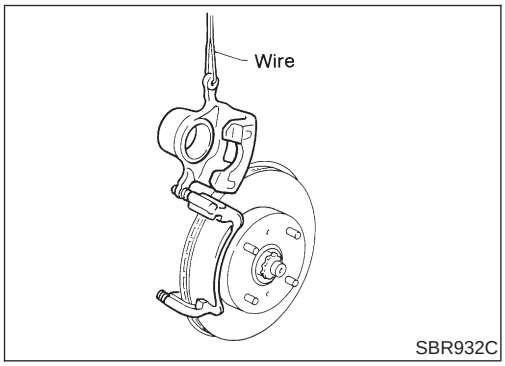

SBR932C

Removal

NJBR0031

WARNING:
Clean brake pads with a vacuum dust collector to minimize the hazard of airborne particles or other materials.

Remove torque member fixing bolts and connecting bolt.
It is not necessary to remove connecting bolt except for disassembly or replacement of caliper assembly. In this case, suspend caliper assembly with wire so as not to stretch brake hose.

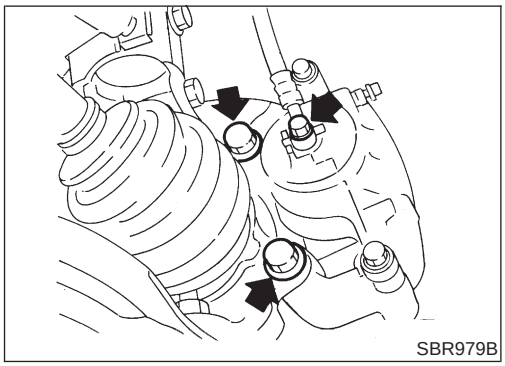
SBR979B

Disassembly

NJBR0032

WARNING:
Do not place your fingers in front of piston.

CAUTION:
Do not scratch or score cylinder wall.

1. Push out piston with piston boot with compressed air.
2. Remove piston seal with a suitable tool.

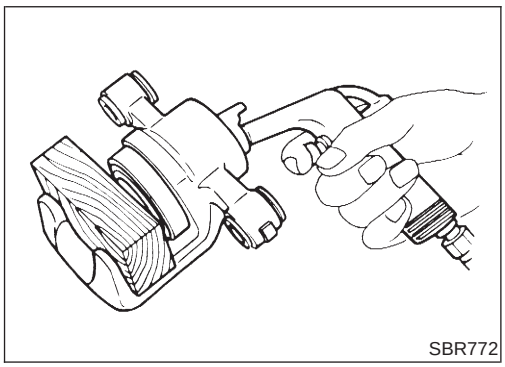
SBR772

Inspection

NJBR0033

CALIPER

NJBR0033S01

Cylinder Body

NJBR0033S0101

- Check inside surface of cylinder for score, rust, wear, damage or presence of foreign materials. If any of the above conditions are observed, replace cylinder body.
- Minor damage from rust or foreign materials may be eliminated by polishing surface with a fine emery paper. Replace cylinder body if necessary.

CAUTION:
Use brake fluid to clean. Never use mineral oil.

Piston

NJBR0033S0102

CAUTION:

Piston sliding surface is plated. Do not polish with emery paper even if rust or foreign materials are stuck to sliding surface.

Check piston for score, rust, wear, damage or presence of foreign materials. Replace if any of the above conditions are observed.

Slide Pin, Pin Bolt and Pin Boot

NJBR0033S0103

Check for wear, cracks or other damage. Replace if any of the above conditions are observed.

ROTOR

NJBR0033S02

Rubbing Surface

NJBR0033S0201

Check rotor for roughness, cracks or chips.

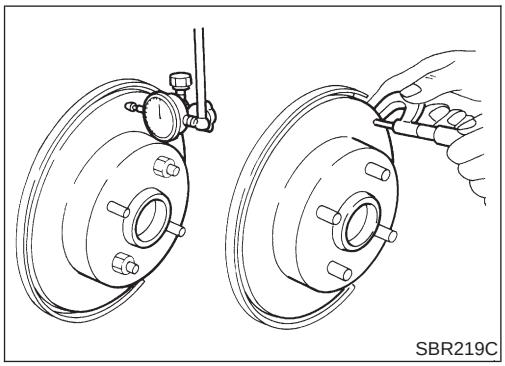

Runout

NJBR0033S0202

1. Secure rotor to wheel hub with at least two nuts (M12 x 1.25).
2. Check runout using a dial indicator.
   Make sure that wheel bearing axial end play is within the specifications before measuring. Refer to AX section ("Front Wheel Bearing", "ON-VEHICLE SERVICE").
   Maximum runout:
   0.07 mm (0.0028 in)
3. If the runout is out of specification, find minimum runout position as follows:

a. Remove nuts and rotor from wheel hub.
b. Shift the rotor one hole and secure rotor to wheel hub with nuts.
c. Measure runout.
d. Repeat steps a. to c. so that minimum runout position can be found.

4. If the runout is still out of specification, turn rotor with on-car brake lathe ("MAD, DL-8700", "AMMCO 700 and 705" or equivalent).

Thickness

NJBR0033S0203

Thickness variation (At least 8 positions):
Maximum 0.01 mm (0.0004 in)

If thickness variation exceeds the specification, turn rotor with on-car brake lathe.

Rotor repair limit:
20.0 mm (0.787 in)

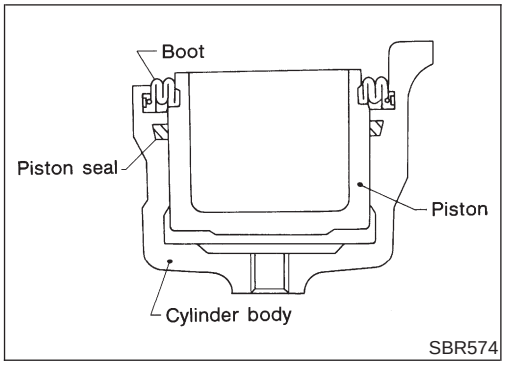

Assembly

NJBR0034

1. Insert piston seal into groove on cylinder body.
2. With piston boot fitted to piston, insert piston boot into groove on cylinder body and install piston.
3. Properly secure piston boot.

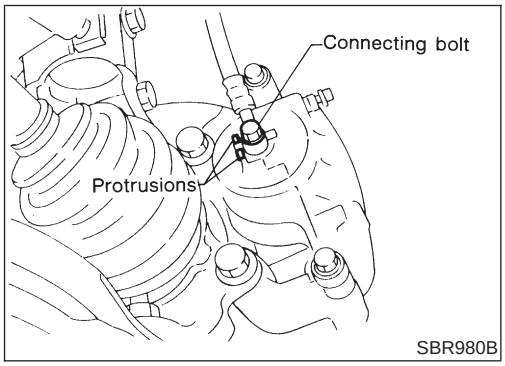

Installation

NJBR0035

CAUTION:

- **Refill with new brake fluid “DOT 3 or DOT 4”.**
- **Never reuse drained brake fluid.**

1. Install brake hose to caliper securely.
2. Install all parts and secure all bolts.
3. Bleed air. Refer to “Bleeding Brake System”, BR-9.

Components

NJBR0128

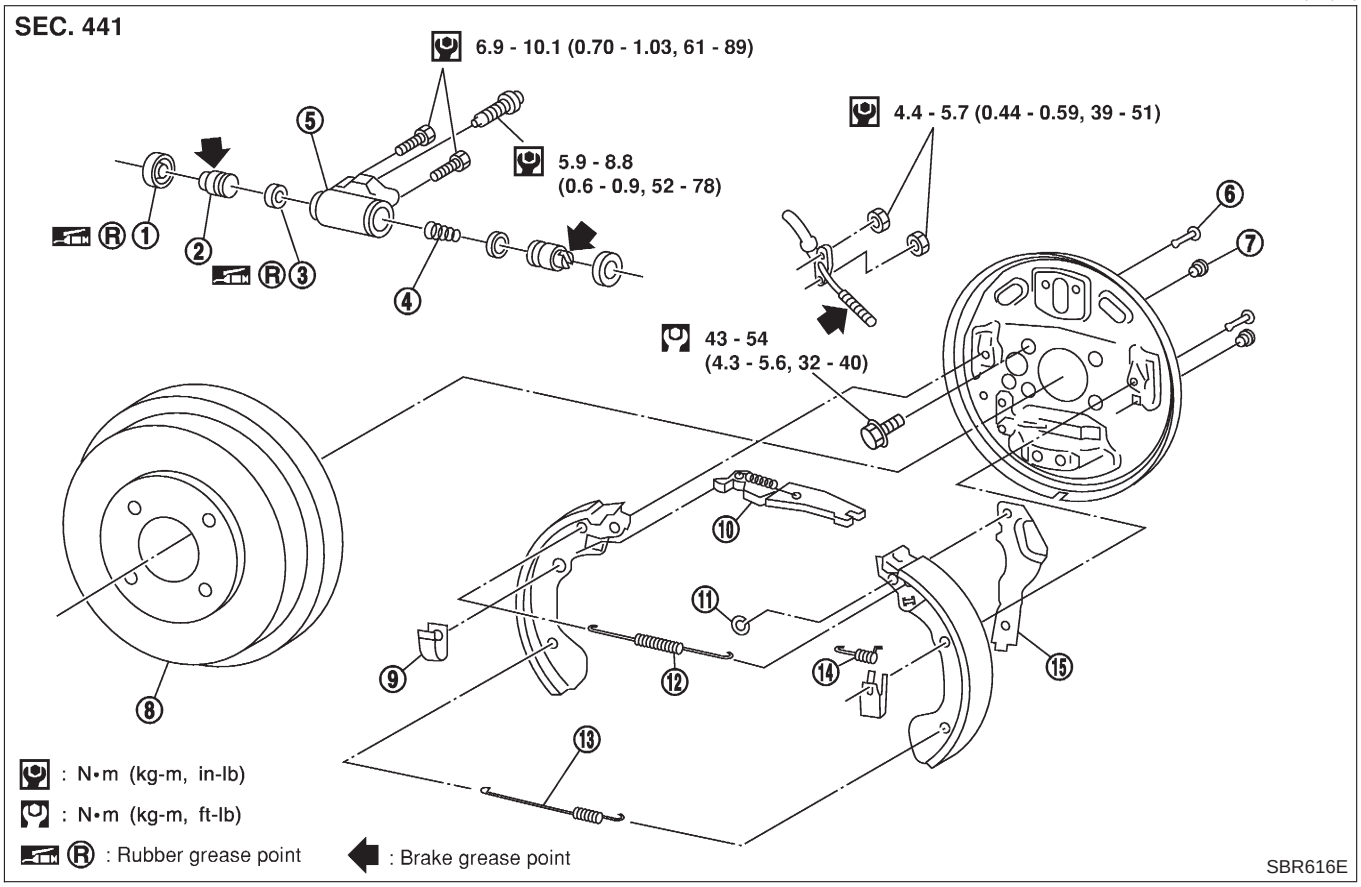

1. Boot
2. Piston
3. Piston cap
4. Spring
5. Wheel cylinder
6. Shoe hold-down pin
7. Plug
8. Brake drum
9. Shoe hold-down spring
10. Adjuster
11. Retainer ring
12. Return spring (Upper)
13. Return spring (Lower)
14. Spring
15. Toggle lever

Removal

NJBR0129

WARNING:

Clean brake lining with a vacuum dust collector to minimize the hazard of airborne materials.

CAUTION:

Make sure parking brake lever is completely released.

Removal (Cont'd)

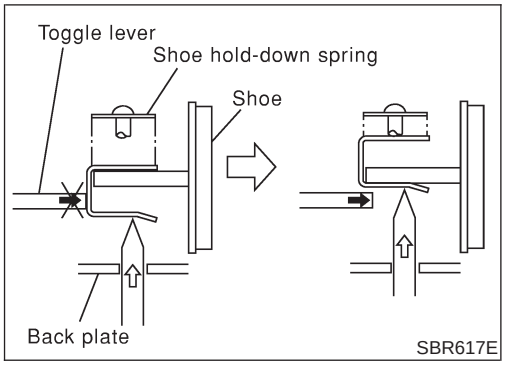

1. Release parking brake lever fully, then remove drum.
If drum is hard to remove, the following procedures should be carried out.

a. **Remove plug. To make shoe clearance, push shoe hold-down spring to free toggle lever.**

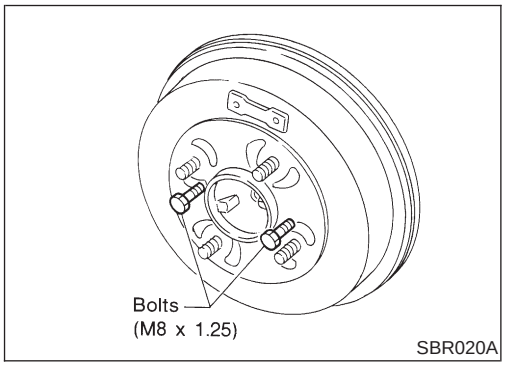

b. **Install two bolts as shown. Tighten the two bolts gradually.**

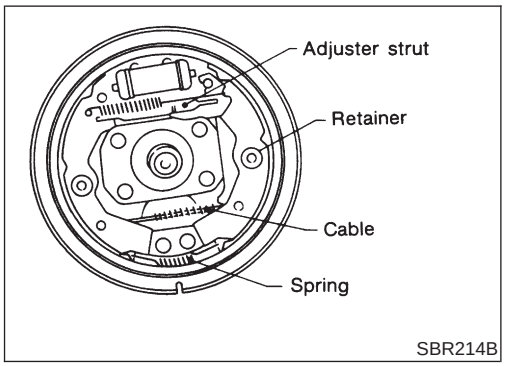

2. After removing retainer, remove spring by rotating shoes.
- **Be careful not to damage wheel cylinder piston boots.**
- **Be careful not to damage parking brake cable when separating it.**

3. Remove adjuster.
4. Disconnect parking brake cable from toggle lever.

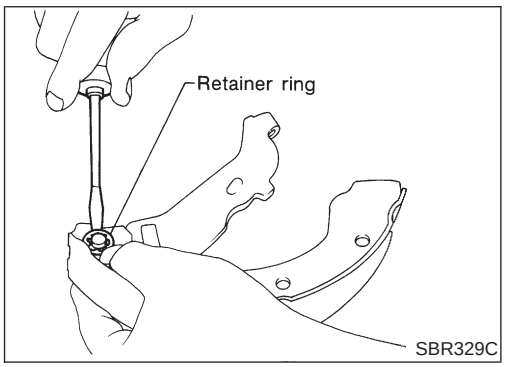

5. Remove retainer ring with a suitable tool. Then separate toggle lever and brake shoe.

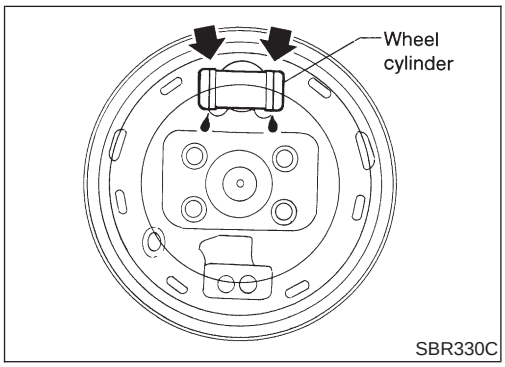

Inspection — Wheel Cylinder

NJBR0130

- Check wheel cylinder for leakage.
- Check for wear, damage and loose conditions. Replace if any such condition exists.

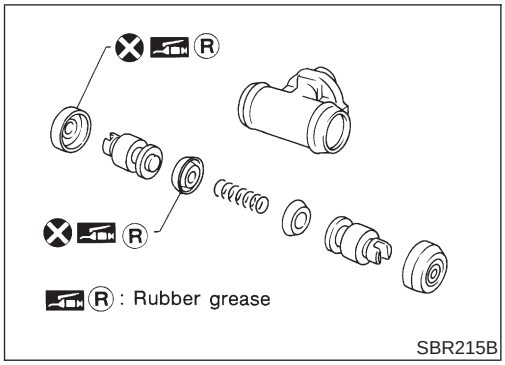

SBR215B

Wheel Cylinder Overhaul

NJBR0131

- Check all internal parts for wear, rust and damage. Replace if necessary.
- Pay attention so as not to scratch cylinder when installing pistons.

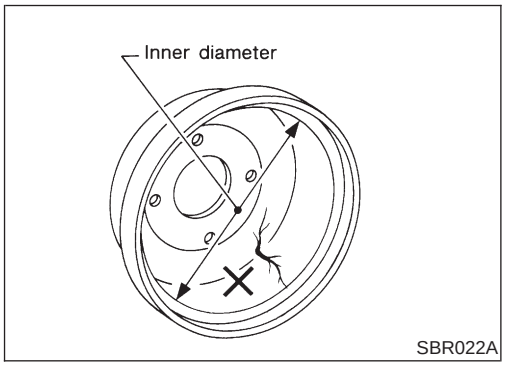

SBR022A

Inspection — Drum

NJBR0132

Maximum inner diameter:
204.5 mm (8.05 in)
Maximum out-of-round:
0.03 mm (0.0012 in)

- Contact surface should be fine finished with No. 120 to 150 emery paper.
- Using a drum lathe, resurface brake drum if it shows scoring, partial wear or stepped wear.
- After brake drum has been completely reconditioned or replaced, check drum and shoes for proper contact pattern.

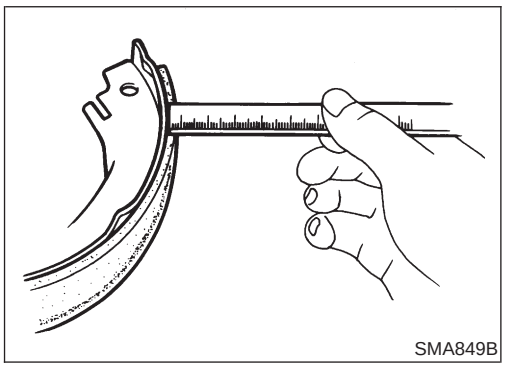
SMA849B

Inspection — Lining

NJBR0133

Check lining thickness.

Standard lining thickness:
4.5 mm (0.177 in)
Lining wear limit:
1.5 mm (0.059 in)

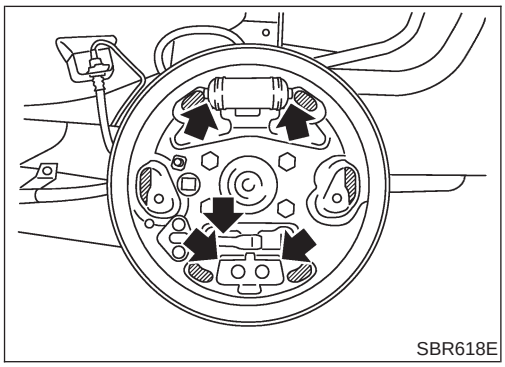
SBR618E

Installation

NJBR0134

- **Always perform shoe clearance adjustment. Refer to BR-48.**
- **Burnish the brake contact surfaces after refinishing or replacing drums or rotors, after replacing pads or linings, or if a soft pedal occurs at very low mileage. Refer to "Brake Burnishing Procedure", "ON-VEHICLE SERVICE", BR-8.**

1. Fit toggle lever to brake shoe with retainer ring.
2. Apply brake grease to the contact areas shown at left.

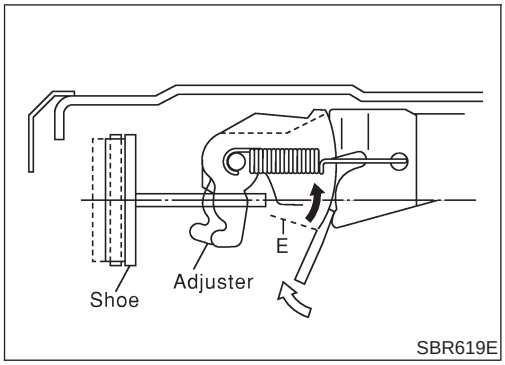

3. Shorten adjuster by rotating it.
- To tighten loosened brake shoes, first, insert a screw driver in the direction shown in the left. Then, move the adjuster in the direction shown by the arrow while disengaging the tooth contact. Never tap the area E.
4. Connect parking brake cable to toggle lever.
5. Install all parts.
   Be careful not to damage wheel cylinder piston boots.
6. Check all parts are installed properly.
   Pay attention to direction of adjuster assembly.
7. Install brake drum.
8. When installing new wheel cylinder or overhauling wheel cylinder, bleed air. Refer to "Bleeding Brake System", BR-9.
9. Adjust parking brake. Refer to BR-48.

Component

NJBR0038

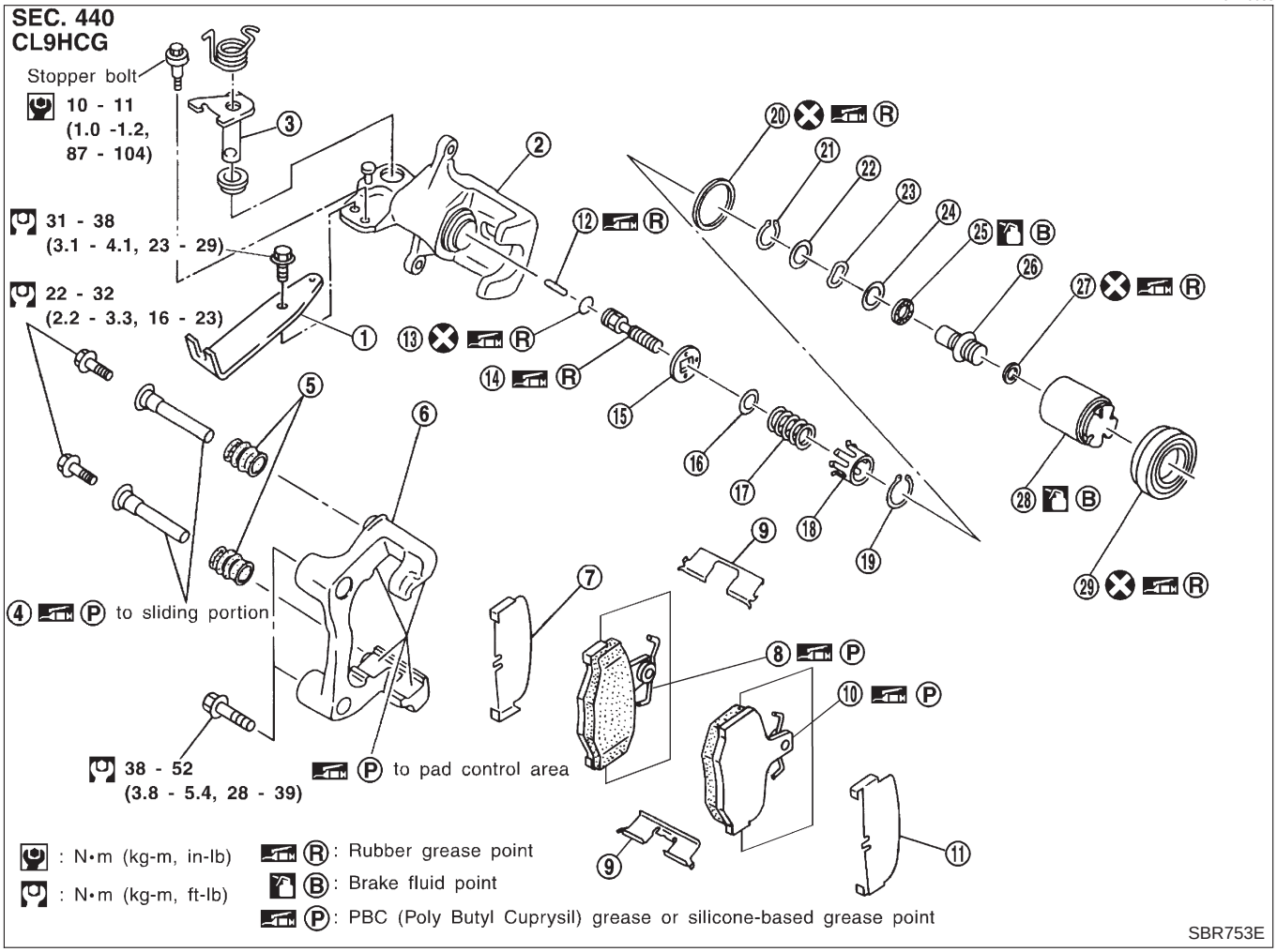

1. Cable guide
2. Cylinder
3. Toggle lever
4. Pin
5. Pin boot
6. Torque member
7. Inner shim
8. Inner pad
9. Pad retainer
10. Outer pad
11. Outer shim
12. Strut
13. O-ring
14. Push rod
15. Key plate
16. Retaining washer
17. Spring
18. Spring cover
19. Snap ring B
20. Piston seal
21. Snap ring A
22. Washer
23. Wave washer
24. Washer
25. Bearing
26. Adjuster
27. Cup
28. Piston
29. Piston boot

Pad Replacement

NJBR0037

WARNING:

Clean brake pads with a vacuum dust collector to minimize the hazard of airborne particles or other materials.

CAUTION:

- **When cylinder body is open, do not depress brake pedal because piston will pop out.**
- **Be careful not to damage piston boot or get oil on rotor. Always replace shims in replacing pads.**
- **If shims are rusted or show peeling of rubber coat, replace them with new shims.**

- **It is not necessary to remove connecting bolt except for disassembly or replacement of caliper assembly. In this case, suspend cylinder body with wire so as not to stretch brake hose.**
- **Burnish the brake contact surfaces after refinishing or replacing drums or rotors, after replacing pads or linings, or if a soft pedal occurs at very low mileage.**
  Refer to "Brake Burnishing Procedure", "ON-VEHICLE SERVICE", BR-8.

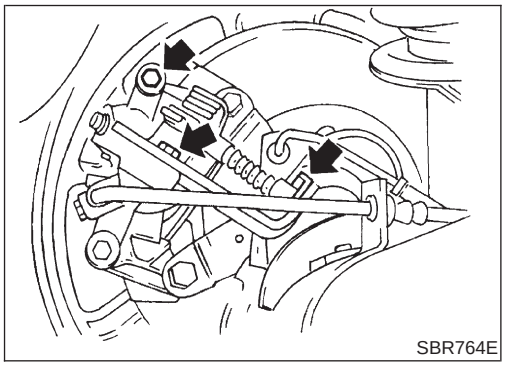
SBR764E

1. Remove master cylinder reservoir cap.
2. Remove brake cable mounting bolt and lock spring.
3. Release parking brake control lever, then disconnect cable from the caliper.
4. Remove upper pin bolt.
5. Open cylinder body downward. Then remove pad retainers, and inner and outer shims.
   Standard pad thickness:
   9.3 mm (0.366 in)
   Pad wear limit:
   2.0 mm (0.079 in)

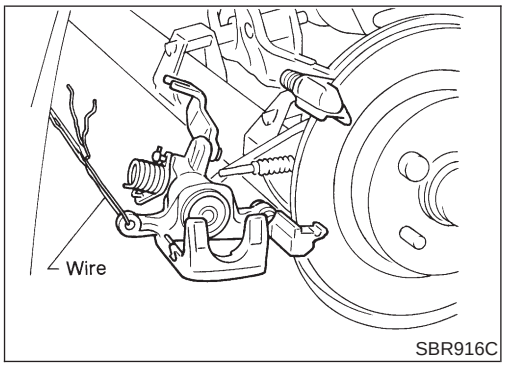

SBR916C

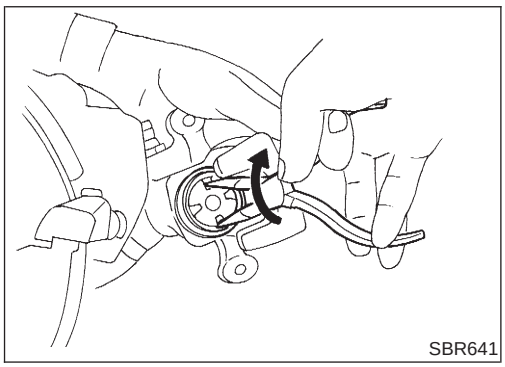
SBR641

6. When installing new pads, push piston into cylinder body by gently turning piston clockwise, as shown.
   Carefully monitor brake fluid level because brake fluid will return to reservoir when pushing back piston.

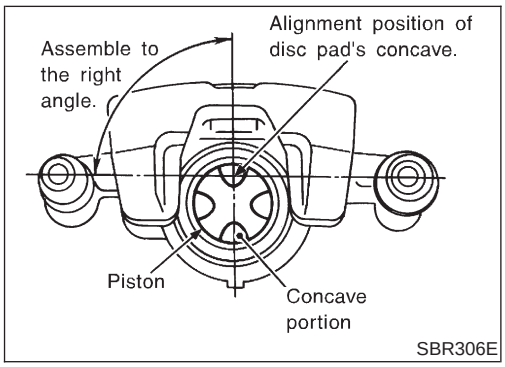

SBR306E

7. Adjust the piston to the right angle as shown in the figure.

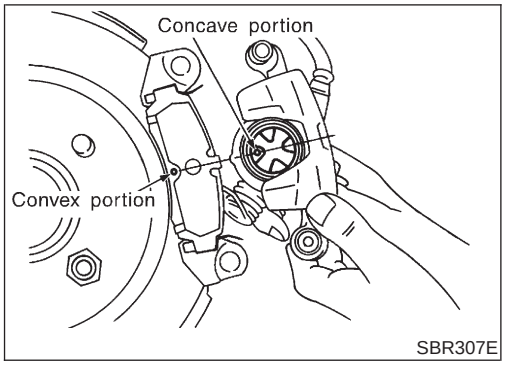

SBR307E

8. As shown in the figure, align the piston's concave to the pad's convex, then install the cylinder body to the torque member.
9. Install brake cable, brake cable mounting bolt, lock spring and master cylinder reservoir cap.

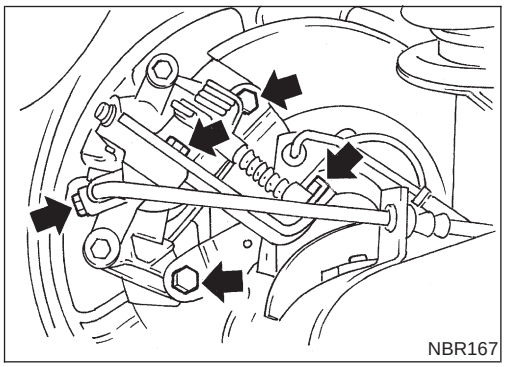
NBR167

Removal

NJBR0039

WARNING:

Clean brake pads with a vacuum dust collector to minimize the hazard of airborne particles or other materials.

1. Remove brake cable mounting bolt and lock spring.
2. Release parking brake control lever, then disconnect cable from the caliper.
3. Remove torque member fixing bolts and connecting bolt.

It is not necessary to remove connecting bolt except for disassembly or replacement of caliper assembly. In this case, suspend caliper assembly with wire so as not to stretch brake hose.

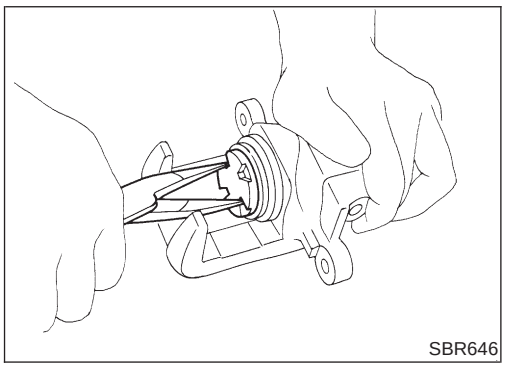
SBR646

Disassembly

NJBR0040

1. Remove piston by turning it counterclockwise with long nose pliers or suitable tool.

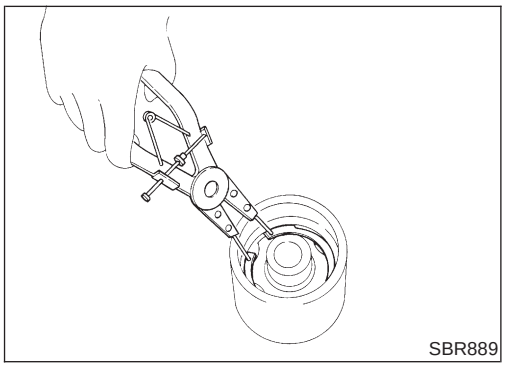
SBR889

2. Pry off ring A from piston with suitable pliers and remove adjusting nut.

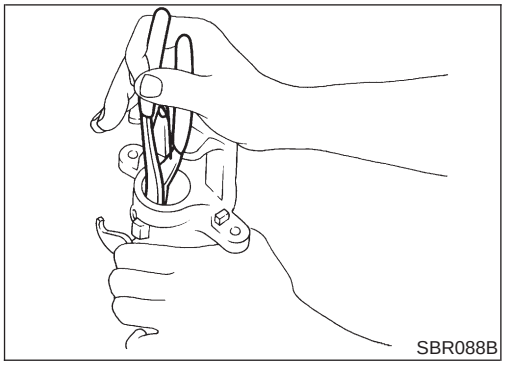

3. Disassemble cylinder body.
a. Pry off ring B with suitable pliers, then remove spring cover, spring and seat.
b. Remove washer, key plate, push rod, O-ring and strut.

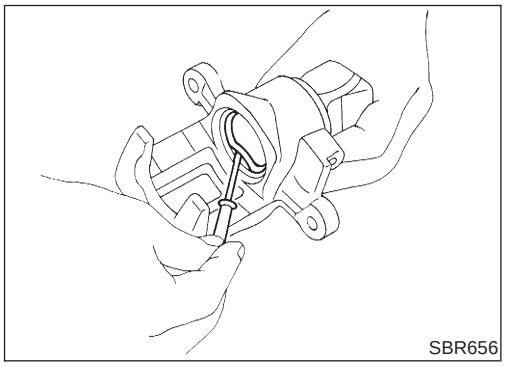

c. Remove piston seal.
Be careful not to damage cylinder body.

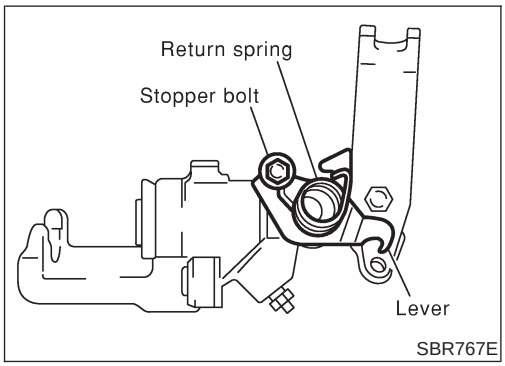

4. Remove return spring, toggle lever and cable guide.

Inspection

NJBR0041

CALIPER

NJBR0041S01

CAUTION:
Use brake fluid to clean cylinder. Never use mineral oil.

Cylinder Body

NJBR0041S0101

- Check inside surface of cylinder for score, rust, wear, damage or presence of foreign materials. If any of the above conditions are observed, replace cylinder body.
- Minor damage from rust or foreign materials may be eliminated by polishing surface with a fine emery paper.
  Replace cylinder body if necessary.

Torque Member

NJBR0041S0102

Check for wear, cracks or other damage. Replace if necessary.

Piston

NJBR0041S0103

CAUTION:
Piston sliding surface is plated. Do not polish with emery paper even if rust or foreign matter is stuck to sliding surface.

Check piston for score, rust, wear, damage or presence of foreign materials.
Replace if any of the above conditions are observed.

Pin and Pin Boot

NJBR0041S0104

Check for wear, cracks or other damage.
Replace if any of the above conditions are observed.

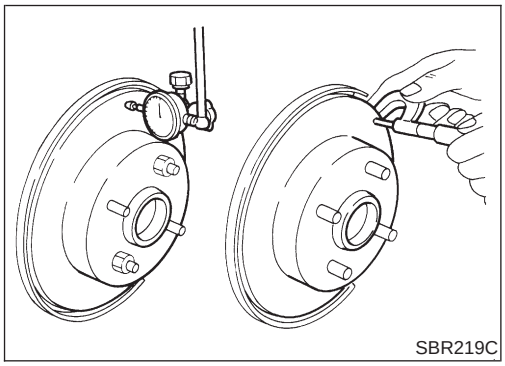

ROTOR

NJBR0041S02

Rubbing Surface

NJBR0041S0201

Check rotor for roughness, cracks or chips.

Runout

NJBR0041S0202

1. Secure rotor to wheel hub with two nuts (M12 x 1.25).
2. Check runout using a dial indicator.

Make sure that axial end play is within the specifications before measuring. Refer to AX section ("REAR WHEEL BEARING", "On-vehicle Service").

3. Change relative positions of rotor and wheel hub so that runout is minimized.

Maximum runout:
0.07 mm (0.0028 in)

Thickness

NJBR0041S0203

Rotor repair limit:
Standard thickness
10 mm (0.39 in)
Minimum thickness
9 mm (0.35 in)
Thickness variation (At least 8 portions)
Maximum 0.02 mm (0.0008 in)

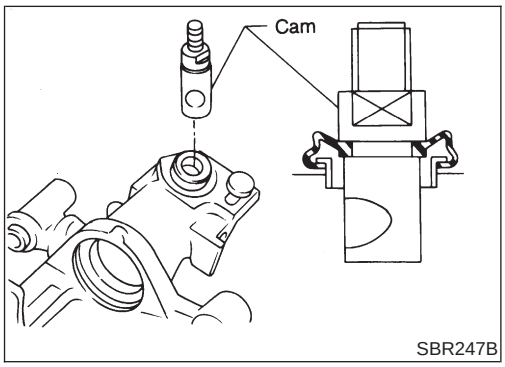

Assembly

NJBR0042

1. Insert cam with depression facing towards open end of cylinder.

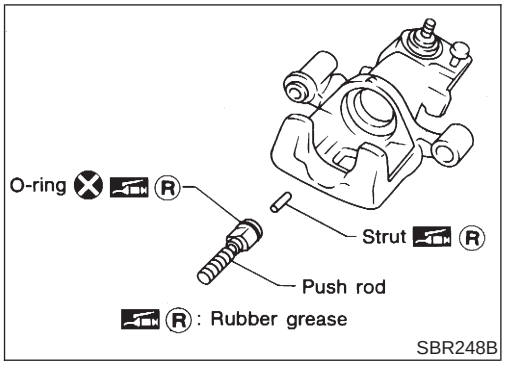

2. Generously apply rubber grease to strut and push rod to make insertion easy.

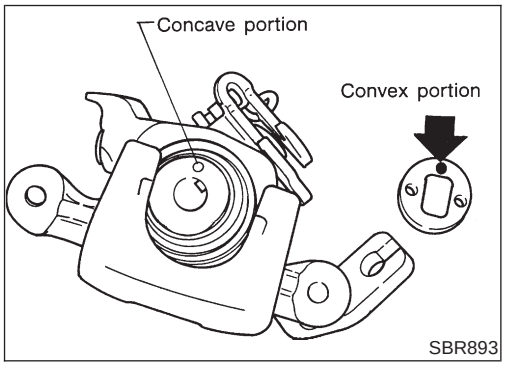

3. Fit push rod into square hole in key plate. Also match convex portion of key plate with concave portion of cylinder.

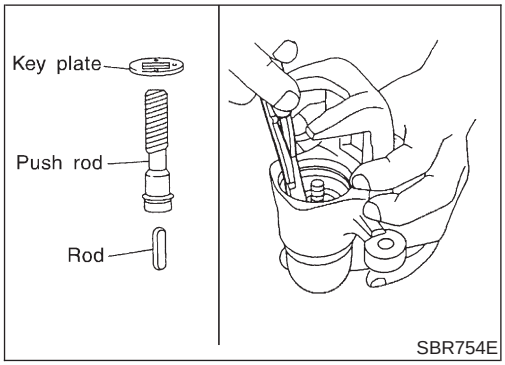

4. Install rod, push rod and key plate.

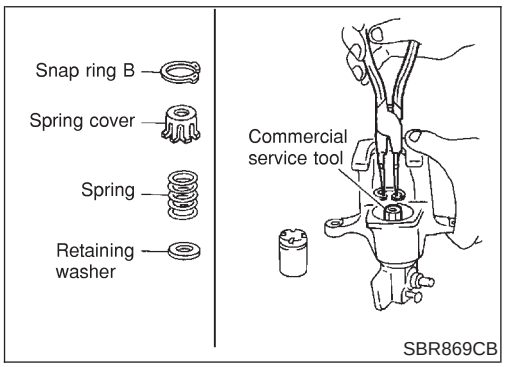

5. Install seat, spring, spring cover and ring B with suitable press and drift.

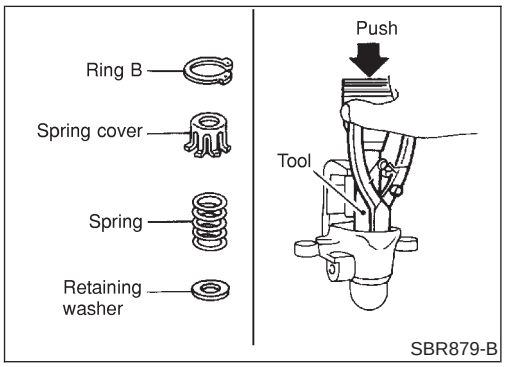

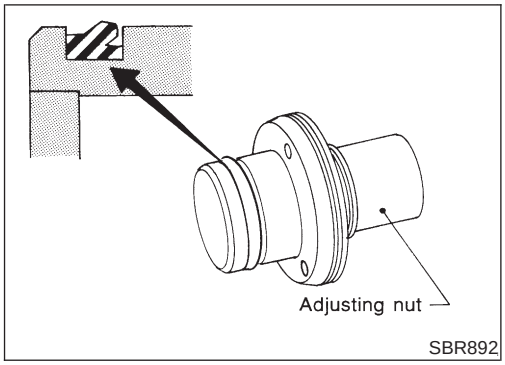

6. Install cup in the specified direction.

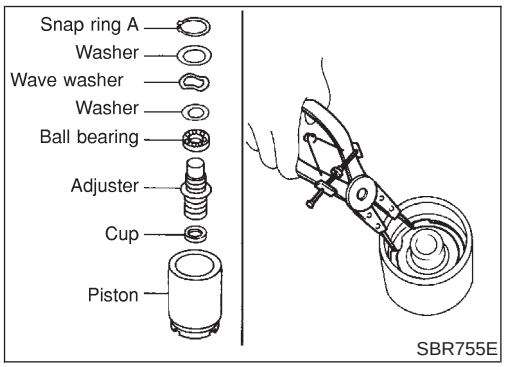

7. Install adjuster, bearing, washers and ring A with a suitable tool.

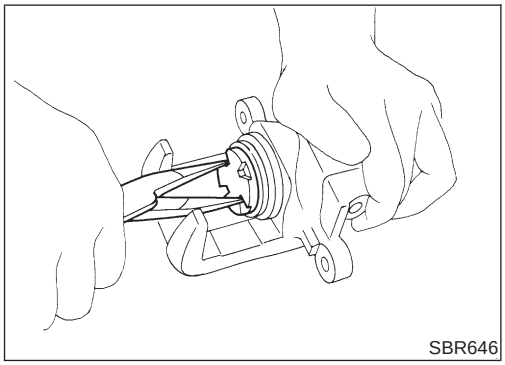

8. Insert piston seal into groove on cylinder body.
9. With piston boot fitted to piston, insert piston boot into groove on cylinder body and fit piston by turning it clockwise with long nose pilers, or suitable tool.

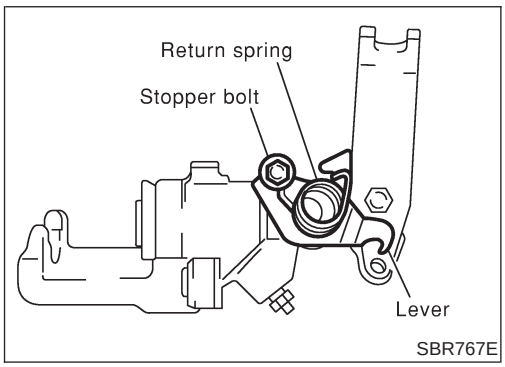

10. Fit toggle lever, return spring and cable guide.

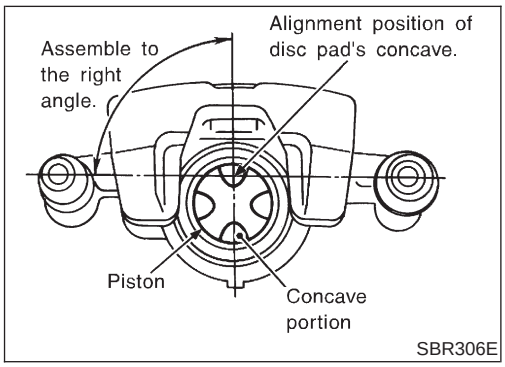

11. Adjust the piston to the right angle as shown in the figure.

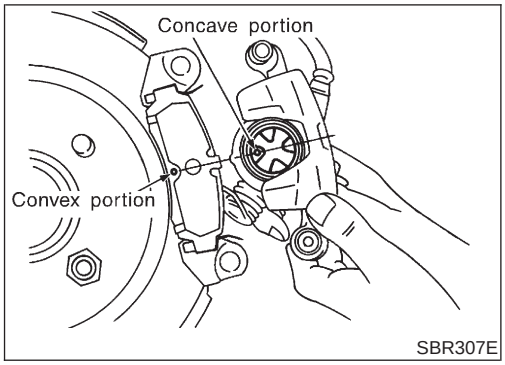

Installation

NJBR0043

CAUTION:

- **Refill with new brake fluid “DOT 4”.**
- **Never reuse drained brake fluid.**

1. Install caliper assembly.
   - As shown in the figure, align the piston’s concave to the pad’s convex, then install the cylinder body to the torque member.
2. Install brake hose to caliper securely.
3. Install all parts and secure all bolts.
4. Bleed air. Refer to “Bleeding Brake System”, BR-9.

Component

NJBR0141

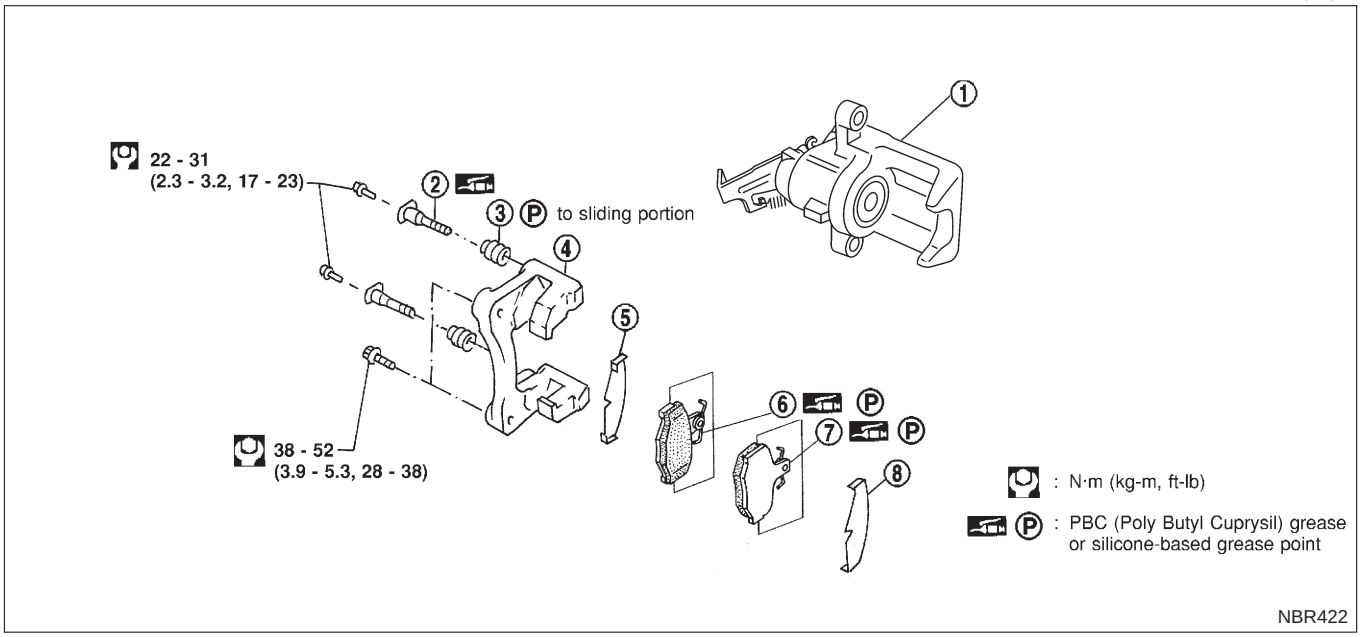

1. Cylinder body
2. Pin
3. Pin boot
4. Torque member
5. Inner shim
6. Inner pad
7. Outer pad
8. Outer shim

NOTE:
The cylinder body cannot be disassembled.

Pad Replacement

NJBR0142

WARNING:

Clean brake pads with a vacuum dust collector to minimize the hazard of airborne particles or other materials.

CAUTION:

- **When cylinder body is open, do not depress brake pedal because piston will pop out.**
- **Be careful not to damage piston boot or get oil on rotor. Always replace shims in replacing pads.**
- **If shims are rusted or show peeling of rubber coat, replace them with new shims.**
- **It is not necessary to remove connecting bolt except for replacement of caliper assembly. In this case, suspend cylinder body with wire so as not to stretch brake hose.**
- **Burnish the brake contact surfaces after refinishing or replacing rotors, after replacing pads, or if a soft pedal occurs at very low mileage.**
  Refer to “Brake Burnishing Procedure”, “ON-VEHICLE SERVICE”, BR-8.

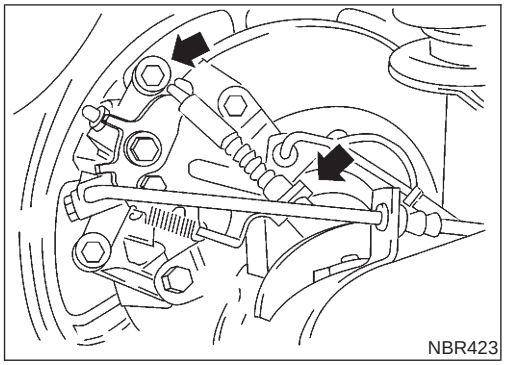
NBR423

1. Remove master cylinder reservoir cap.
2. Remove brake cable lock spring.
3. Release parking brake control lever, then disconnect cable from the caliper.
4. Remove upper pin bolt.

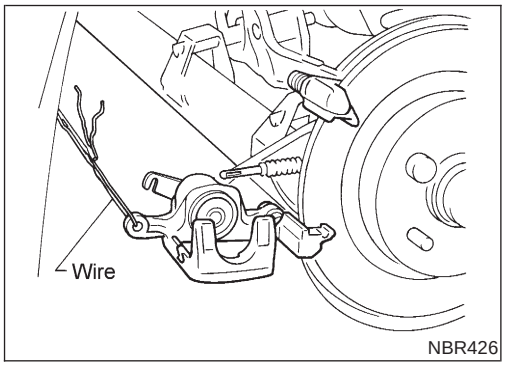

NBR426

5. Open cylinder body downward. Then remove pads inner and outer shims.

   Standard pad thickness:
   9.3 mm (0.366 in)
   Pad wear limit:
   2.0 mm (0.079 in)

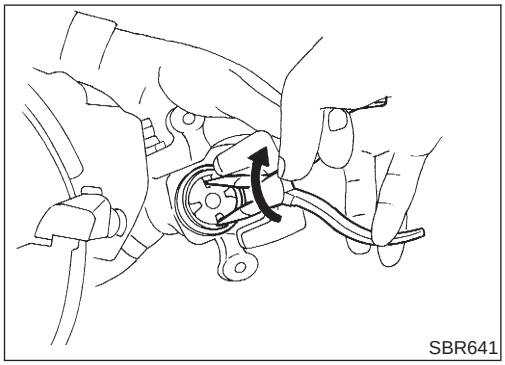
SBR641

6. When installing new pads, push piston into cylinder body by gently turning piston clockwise, as shown.
   Carefully monitor brake fluid level because brake fluid will return to reservoir when pushing back piston.

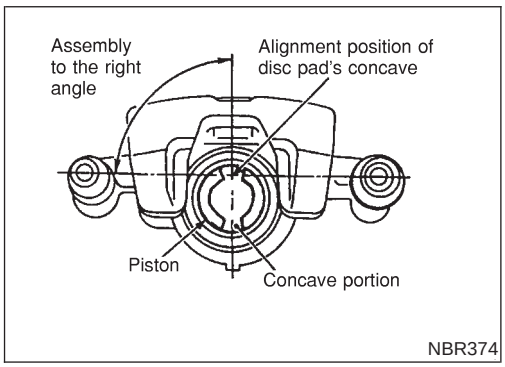

NBR374

7. Adjust the piston to the right angle as shown in the figure.

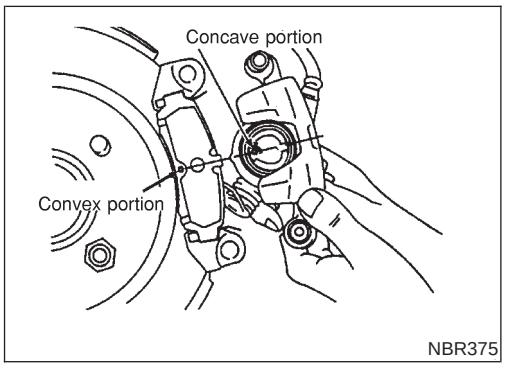

NBR375

8. As shown in the figure, align the piston's concave to the pad's convex, then install the cylinder body to the torque member.
9. Install brake cable, brake cable mounting bolt, lock spring and master cylinder reservoir cap.

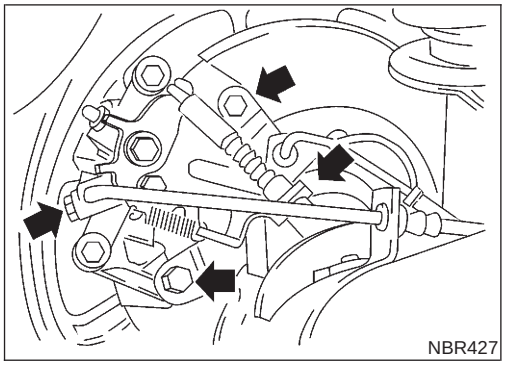

Removal

NJBR0143

WARNING:

Clean brake pads with a vacuum dust collector to minimize the hazard of airborne particles or other materials.

1. Remove brake cable lock spring.
2. Release parking brake control lever, then disconnect cable from the caliper.
3. Remove torque member fixing bolts and connecting bolt.
4. Remove brake hose connecting bolt.
5. Plug off the brake hose and cylinder body to prevent air entering the system.

CAUTION:

Care should be taken as not to let:

- **Air enter the cylinder body and brake hose.**
- **Brake fluid spill from the cylinder body and brake hose.**

Disassembly

NJBR0144

Remove pin bolts and pins.

NOTE:

Cylinder body can not be disassembled.

Inspection

NJBR0145

CALIPER

NJBR0145S01

CAUTION:

Do not drain any brake fluid from cylinder body. Cylinder body can not be disassembled.

Cylinder Body

NJBR0145S0101

Check cylinder body for score, rust, wear, damage or presence of foreign materials. If any of the above conditions are observed, replace cylinder body.

Torque Member

NJBR0145S0102

Check for wear, cracks or other damage. Replace if necessary.

Pin and Pin Boot

NJBR0145S0104

Check for wear, cracks or other damage.
Replace if any of the above conditions are observed.

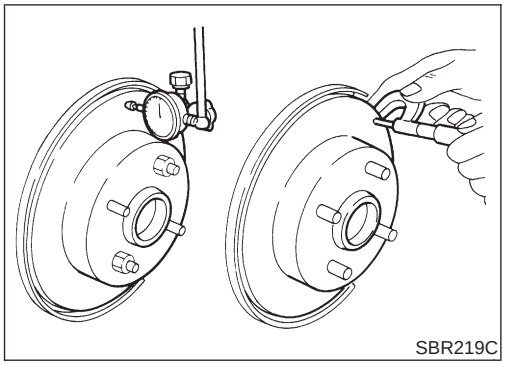

ROTOR

NJBR0145S02

Rubbing Surface

NJBR0145S0201

Check rotor for roughness, cracks or chips.

Runout

NJBR0145S0202

1. Secure rotor to wheel hub with two nuts (M12 x 1.25).
2. Check runout using a dial indicator.

Make sure that axial end play is within the specifications before measuring. Refer to AX section ("REAR WHEEL BEARING", "On-vehicle Service").

3. Change relative positions of rotor and wheel hub so that runout is minimized.

Maximum runout:
0.07 mm (0.0028 in)

Thickness

NJBR0145S0203

Rotor repair limit:
Standard thickness
10 mm (0.39 in)
Minimum thickness
9 mm (0.35 in)
Thickness variation (At least 8 portions)
Maximum 0.02 mm (0.0008 in)

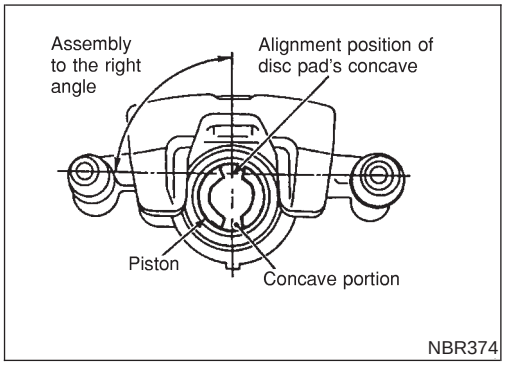

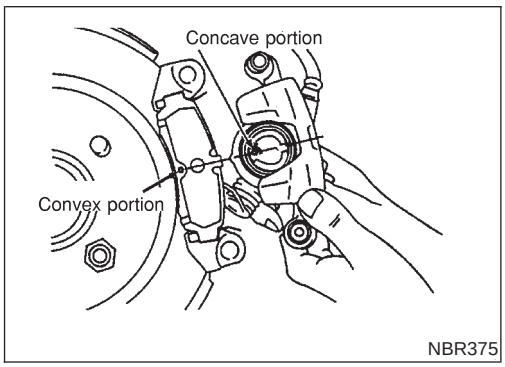

Installation

NJBR0146

CAUTION:

- **Refill with new brake fluid "DOT 4".**
- **Never reuse drained brake fluid.**
- **Do not drain (factory) filled brake fluid from (new) caliper assemblies.**

1. Install caliper assembly.
   - As shown in the figure, align the piston's concave to the pad's convex, then install the cylinder body to the torque member.
2. Remove the plug from the cylinder body and brake hose.

CAUTION:

Care should be taken as not to let:

- **Air enter the cylinder body and brake hose.**
- **Brake fluid spill from the cylinder body and brake hose.**

3. Install brake hose to caliper securely.
4. Install all parts and secure all bolts.
5. Bleed air. Refer to "Bleeding Brake System", BR-9.

Components

NJBR0044

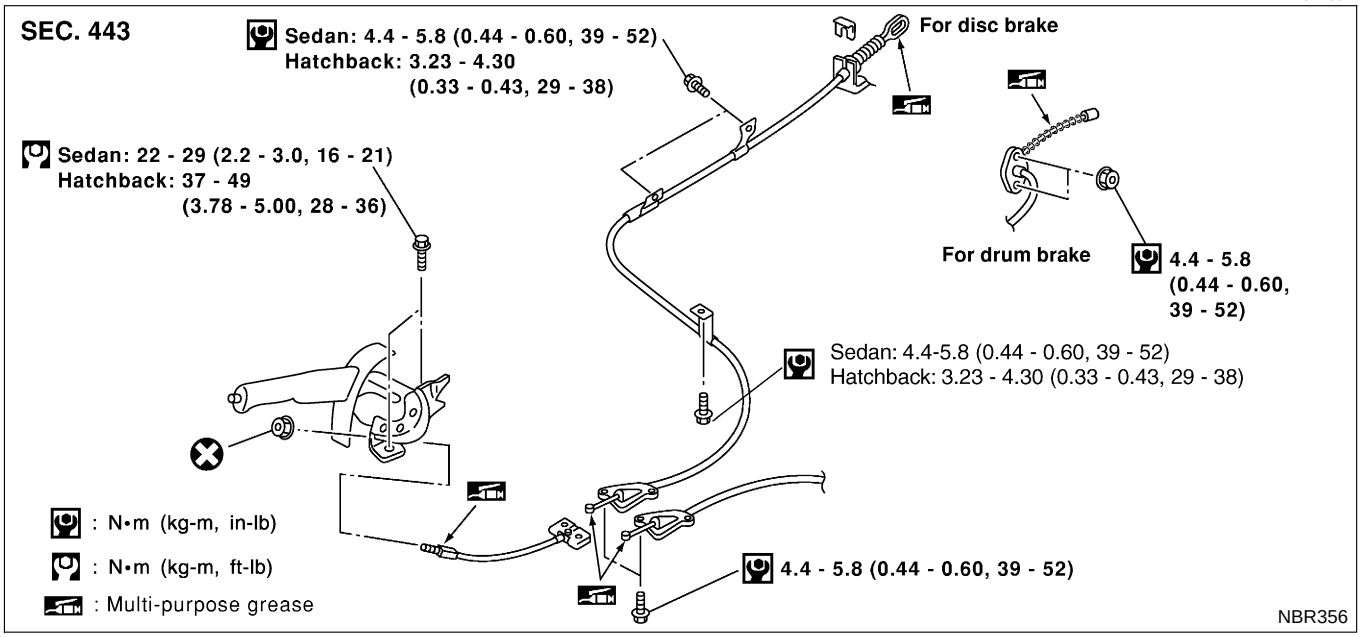

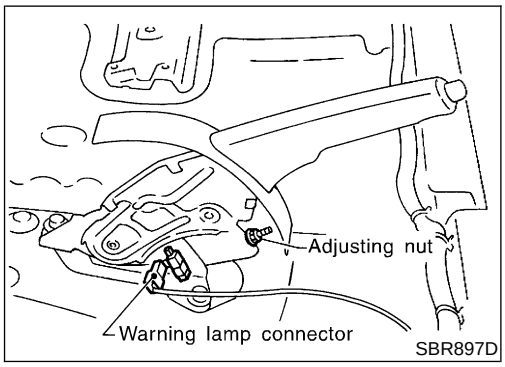

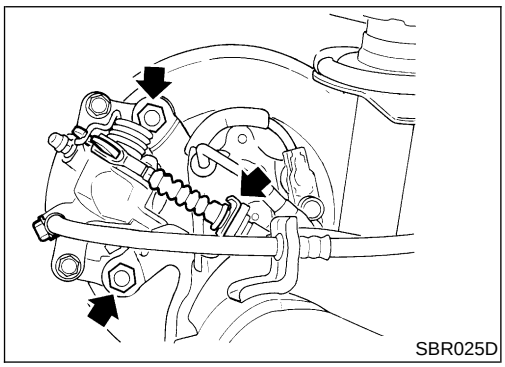

Removal and Installation

NJBR0045

1. To remove parking brake cable, first remove center console.
2. Disconnect warning lamp switch connector.
3. Remove adjusting nut.
4. Remove bolts and nuts securing parking brake cable.
5. Remove parking brake device.
6. Remove lock plate and disconnect cable (disc brake only). For drum brake models, refer to ‘‘Removal’’, ‘‘REAR DRUM BRAKE’’, BR-31.

Inspection

NJBR0046

1. Check control lever for wear or other damage. Replace if necessary.
2. Check wires for discontinuity or deterioration. Replace if necessary.
3. Check warning lamp and switch. Replace if necessary.
4. Check parts at each connecting portion and, if found deformed or damaged, replace.

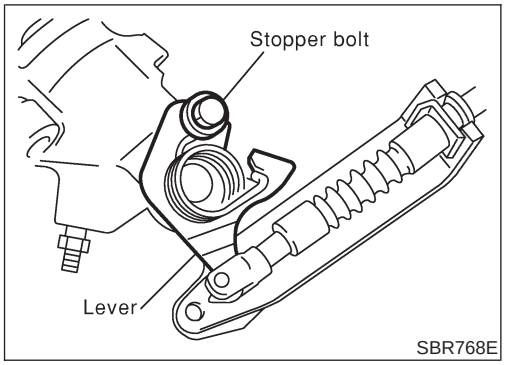

Adjustment

NJBR0047

Before or after adjustment, pay attention to the following points.

- For rear disc brake be sure that toggle lever returns to stopper when parking brake lever is released.
- There is no drag when parking brake lever is released.

1. Adjust clearance between shoe and drum/pad and rotor as follows:

a. Release parking brake lever and loosen adjusting nut.

b. Depress brake pedal fully at least 10 times with engine running.

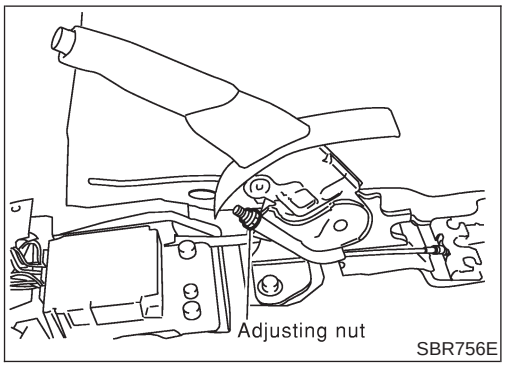

2. Pull control lever 10 times or more to make a lever stroke of 195 mm (7.68 in). At 8 - 9 notches (Sedan) or 4 to 6 (Hatchback) notches, adjust the parking brake cable by turning the adjusting nut.

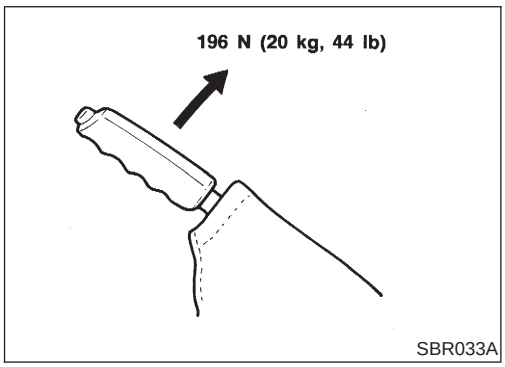

3. Pull control lever with specified amount of force. Check lever stroke and ensure smooth operation.

Number of notches

Sedan: 8 - 9

Hatchback: 4 - 6

4. Bend warning lamp switch plate to ensure:

- Warning lamp comes on when lever is lifted “A” notches.
- Warning lamp goes out when lever is fully released.

Number of “A” notches: 1

DESCRIPTION

Purpose

NJBR0082

The ABS consists of electronic and hydraulic components. It allows for control of braking force so that locking of the wheels can be avoided.
The ABS:

1) Ensures proper tracking performance through steering wheel operation.
2) Enables obstacles to be avoided through steering wheel operation.
3) Ensures vehicle stability by preventing flat spins.

ABS (Anti-Lock Brake System) Operation

NJBR0083

- When the vehicle speed is less than 10 km/h (6 MPH) this system does not work.
- The Anti-Lock Brake System (ABS) has self-test capabilities. The system turns on the ABS warning lamp for 1 second after turning the ignition switch ON. The system performs another test the first time the vehicle reaches 6 km/h (4 MPH). A mechanical noise may be heard as the ABS performs a self-test. This is a normal part of the self-test feature. If a malfunction is found during this check, the ABS warning lamp will come on.
- During ABS operation, a mechanical noise may be heard. This is a normal condition.

ABS Hydraulic Circuit

NJBR0084

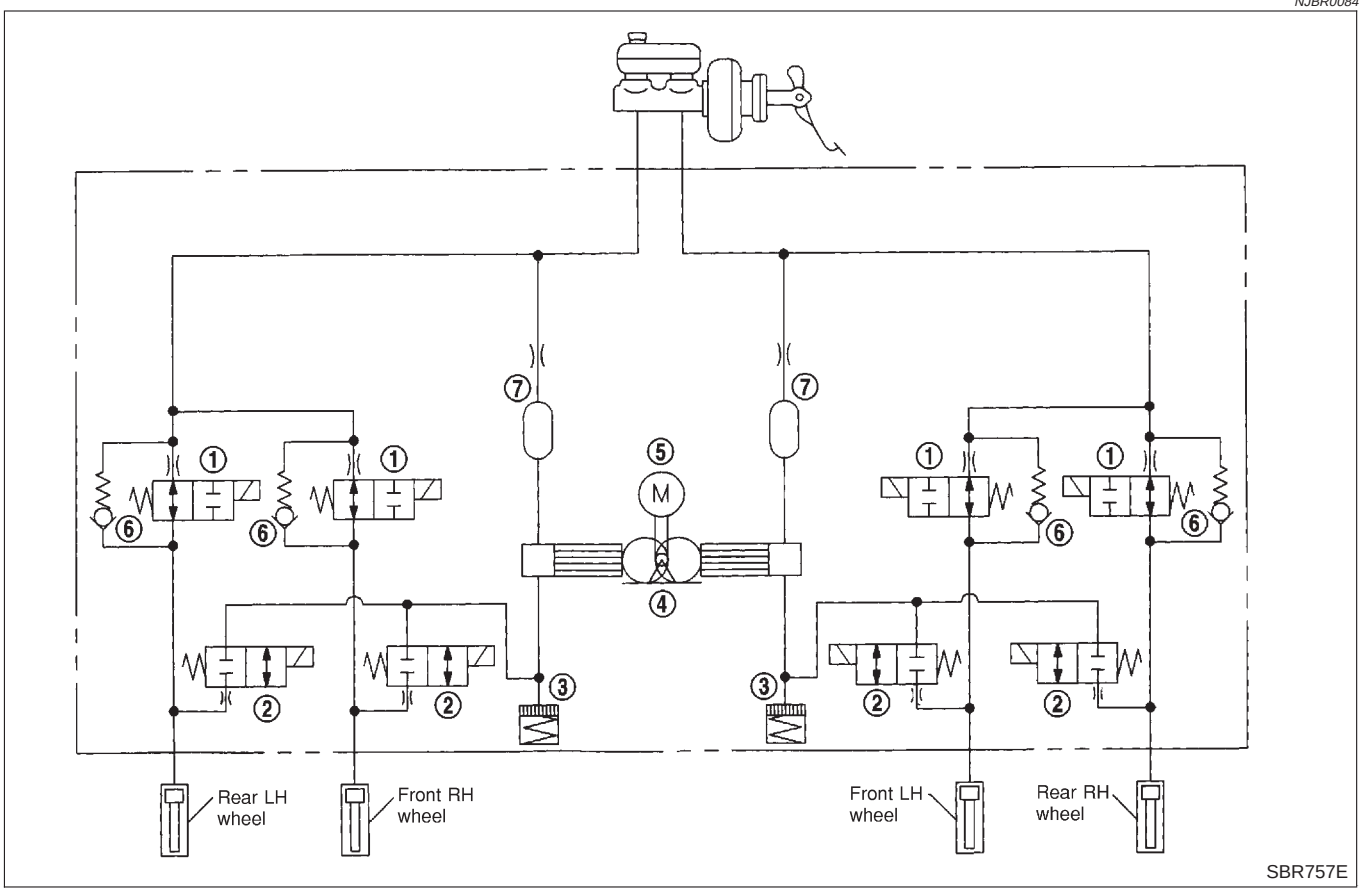

1. Inlet solenoid valve
2. Outlet solenoid valve
3. Reservoir
4. Pump
5. Motor
6. Bypass check valve
7. Damper

System Components

NJBR0086

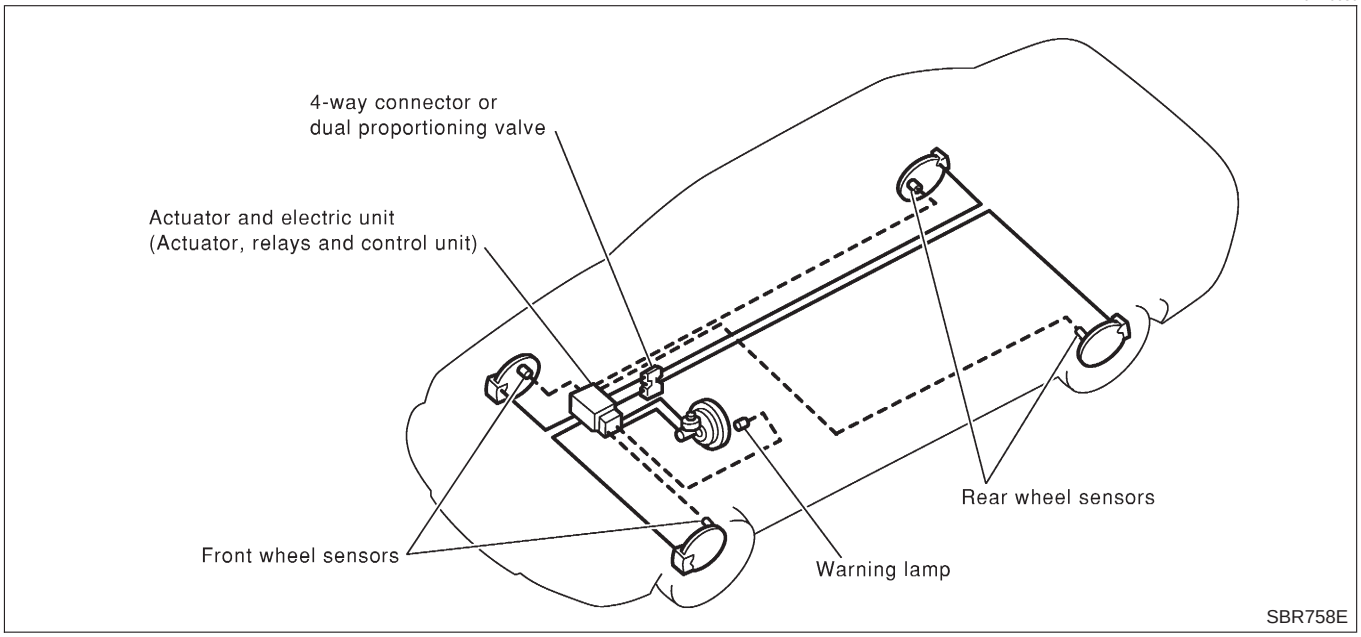

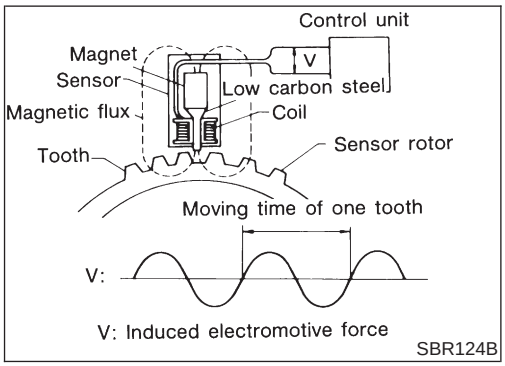

System Description

NJBR0087

SENSOR

NJBR0087S01

The sensor unit consists of a gear-shaped sensor rotor and a sensor element. The element contains a bar magnet around which a coil is wound. The sensor is installed on the back side of the brake rotor. Sine-wave current is generated by the sensor as the wheel rotates. The frequency and voltage increase(s) as the rotating speed increases.

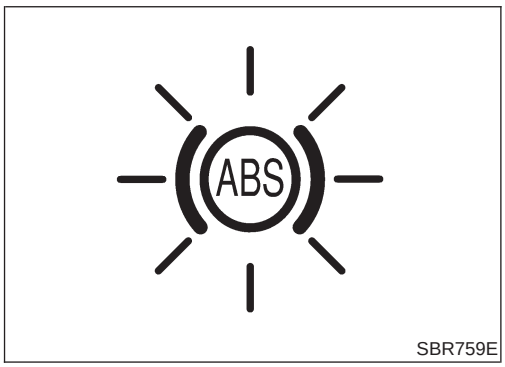

CONTROL UNIT

NJBR0087S02

The control unit computes the wheel rotating speed by the signal current sent from the sensor. Then it supplies a DC current to the actuator solenoid valve. It also controls ON-OFF operation of the valve relay and motor relay. If any electrical malfunction should be detected in the system, the control unit causes the warning lamp to light up. In this condition, the ABS will be deactivated by the control unit, and the vehicle's brake system reverts to normal operation.

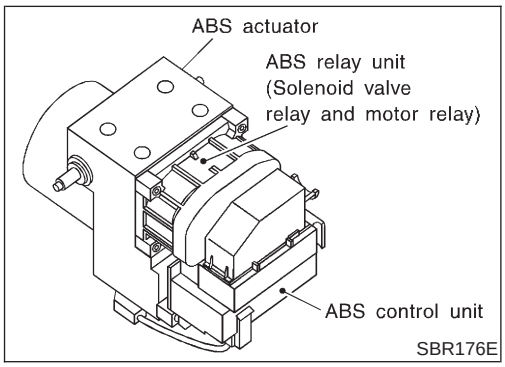

ABS ACTUATOR AND ELECTRIC UNIT

NJBR0087S03

The ABS actuator and electric unit contains:

- An electric motor and pump
- Two relays
- Eight solenoid valves, each inlet and outlet for
  — LH front
  — RH front
  — LH rear
  — RH rear
- ABS control unit

This components controls the hydraulic circuit and increases, holds or decreases hydraulic pressure to all or individual wheels. The ABS actuator and electric unit are not disassemble.

ABS Actuator Operation

NJBR0087S0301

		Inlet solenoid valve	Outlet solenoid valve	
Normal brake operation		OFF (Open)	OFF (Closed)	Master cylinder brake fluid pressure is directly transmitted to caliper via the inlet solenoid valve.
ABS operation	Pressure hold	ON (Closed)	OFF (Closed)	Hydraulic circuit is shut off to hold the caliper brake fluid pressure.
	Pressure decrease	ON (Closed)	ON (Open)	Caliper brake fluid is sent to reservoir via the outlet solenoid valve. Then it is pushed up to the master cylinder by pump.
	Pressure increase	OFF (Open)	OFF (Closed)	Master cylinder brake fluid pressure is transmitted to caliper.

Component Parts and Harness Connector Location

NJBR0088

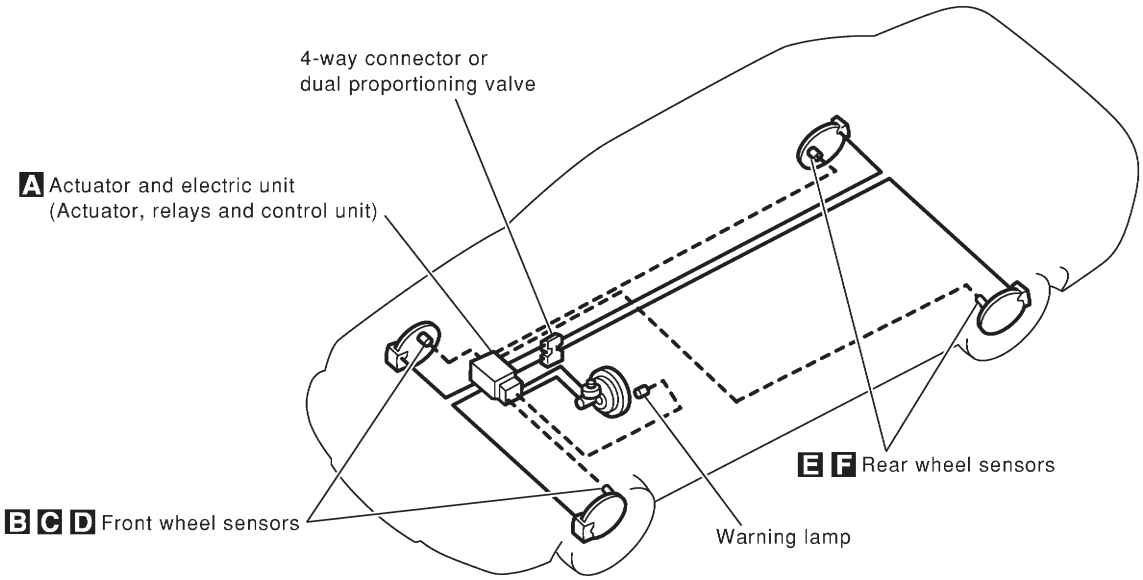

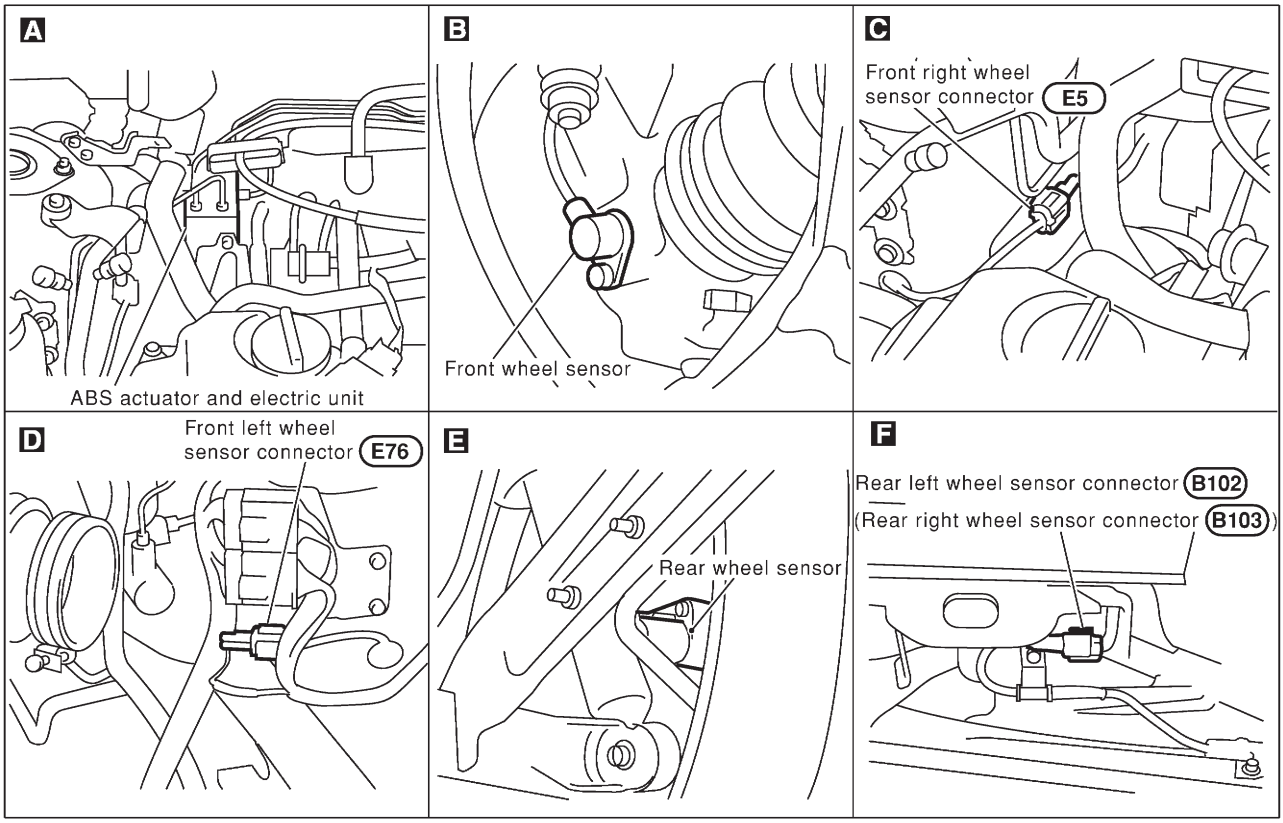

SBR765E

Schematic/Sedan

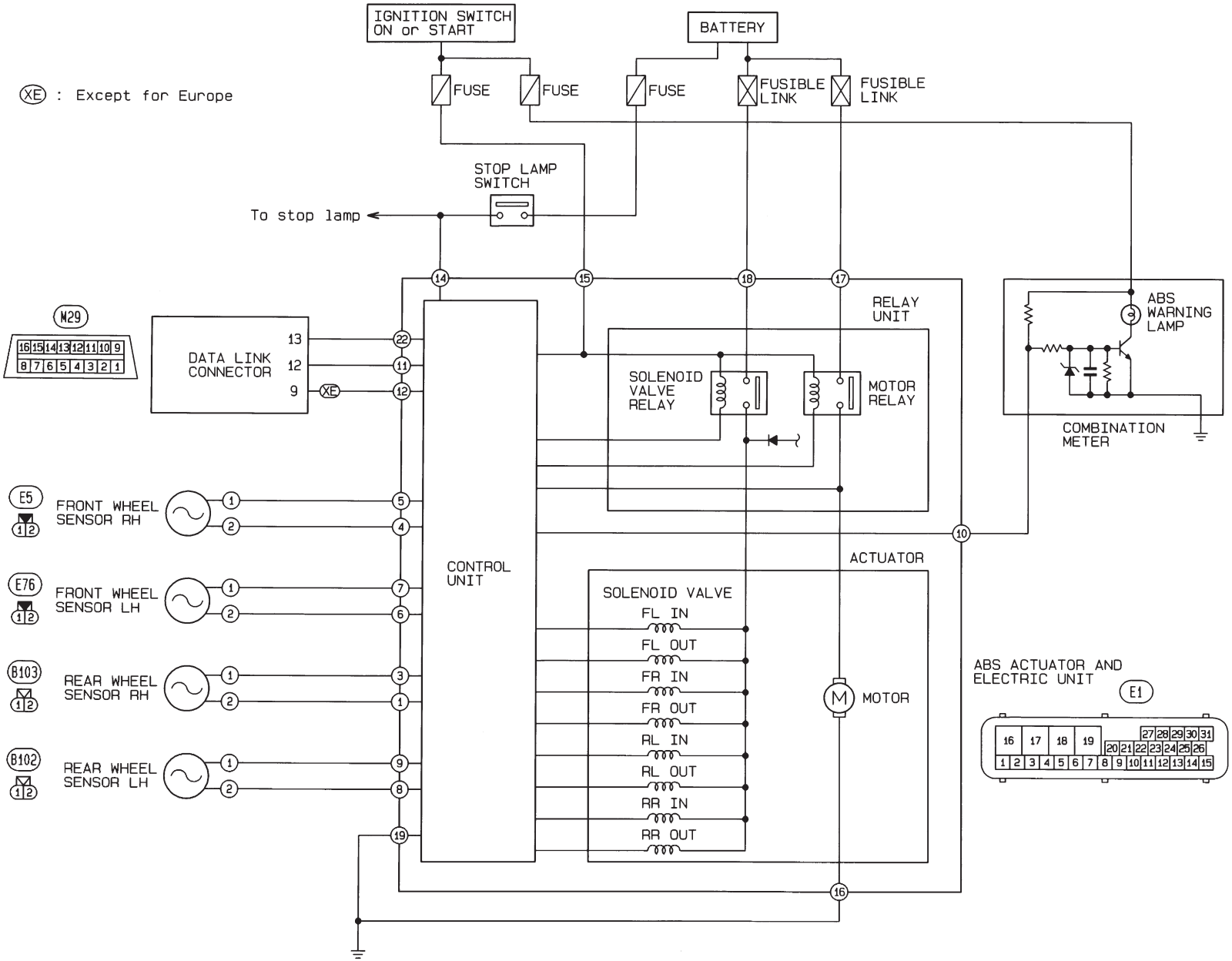

NJBR0089

Wiring Diagram — ABS —/Sedan

NJBR0090

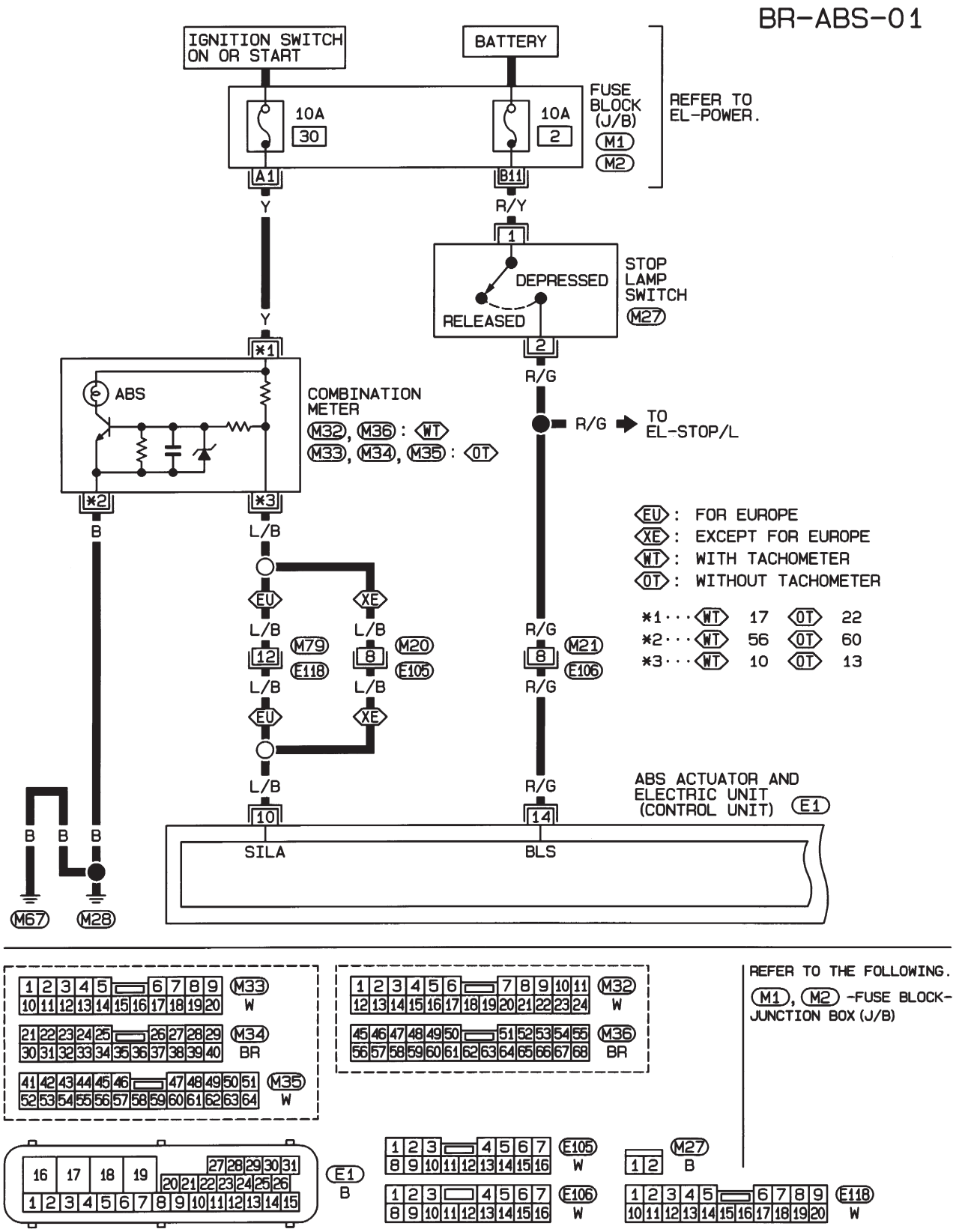

BR-ABS-02

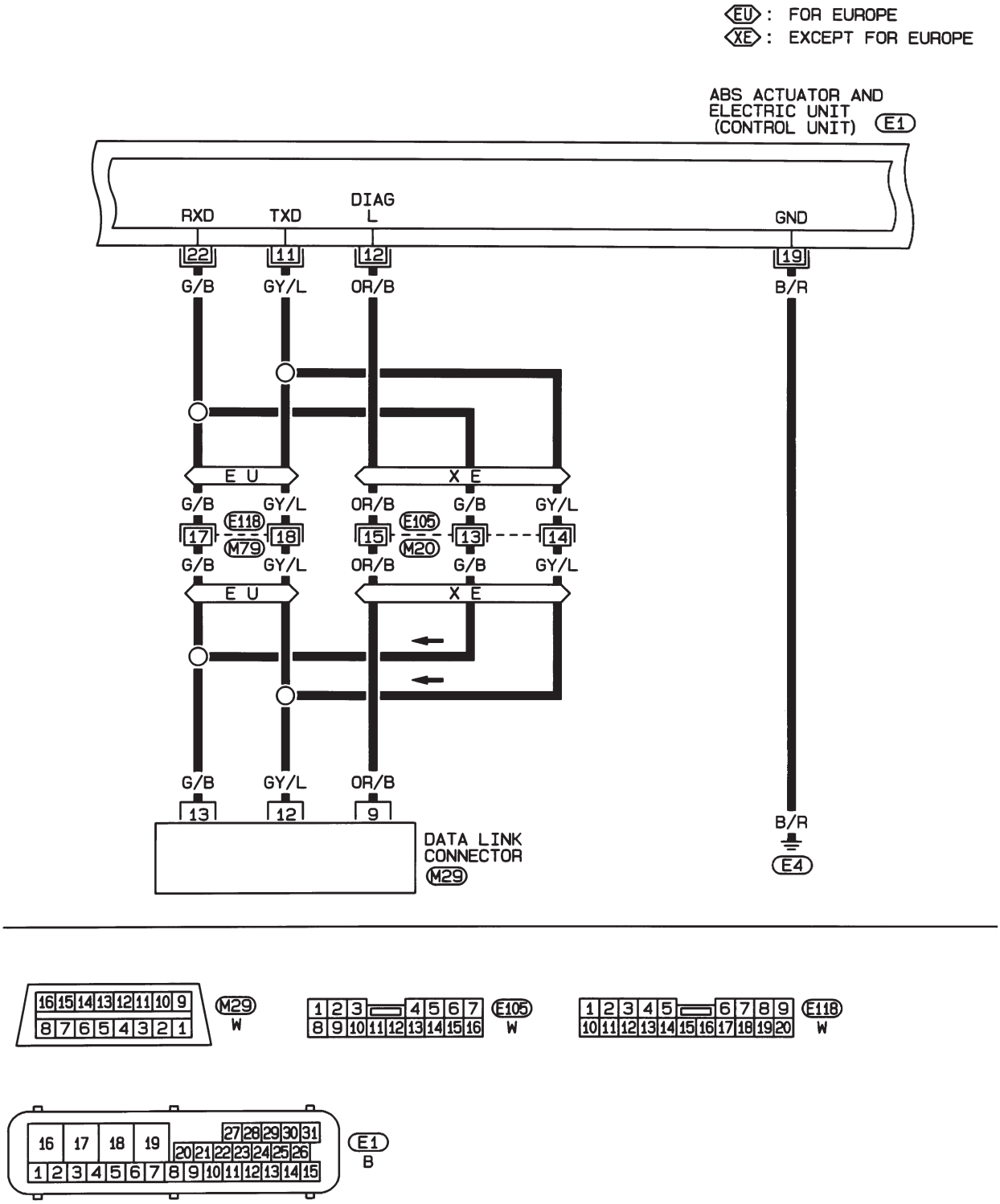

HBR132

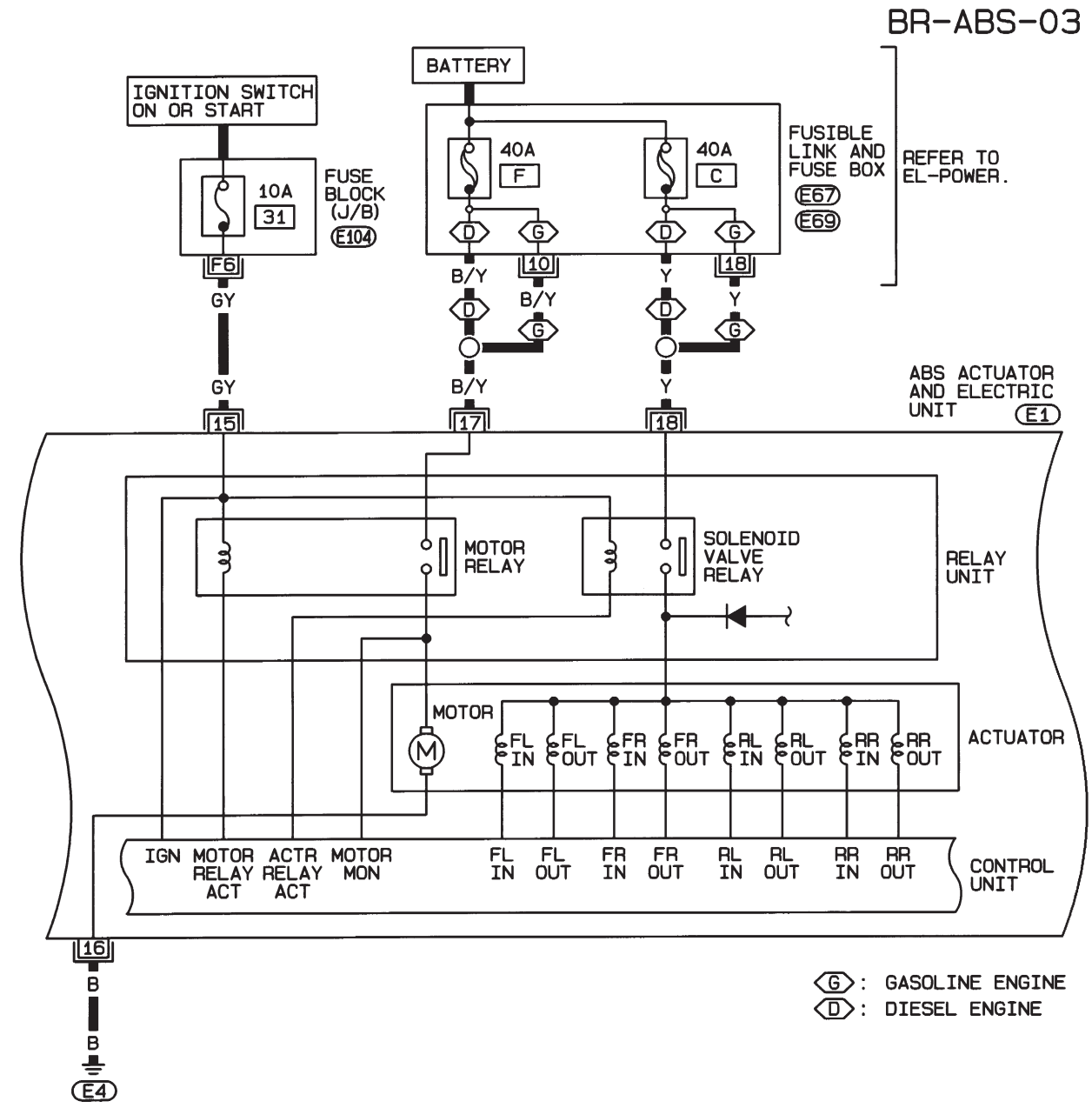

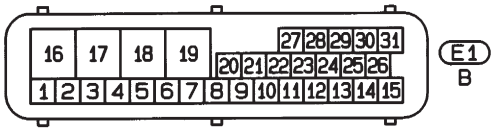

REFER TO THE FOLLOWING.

E104 -FUSE BLOCK-JUNCTION BOX (J/B)

E67, E69 -FUSE AND FUSIBLE LINK BOX

HBR103

BR-ABS-04

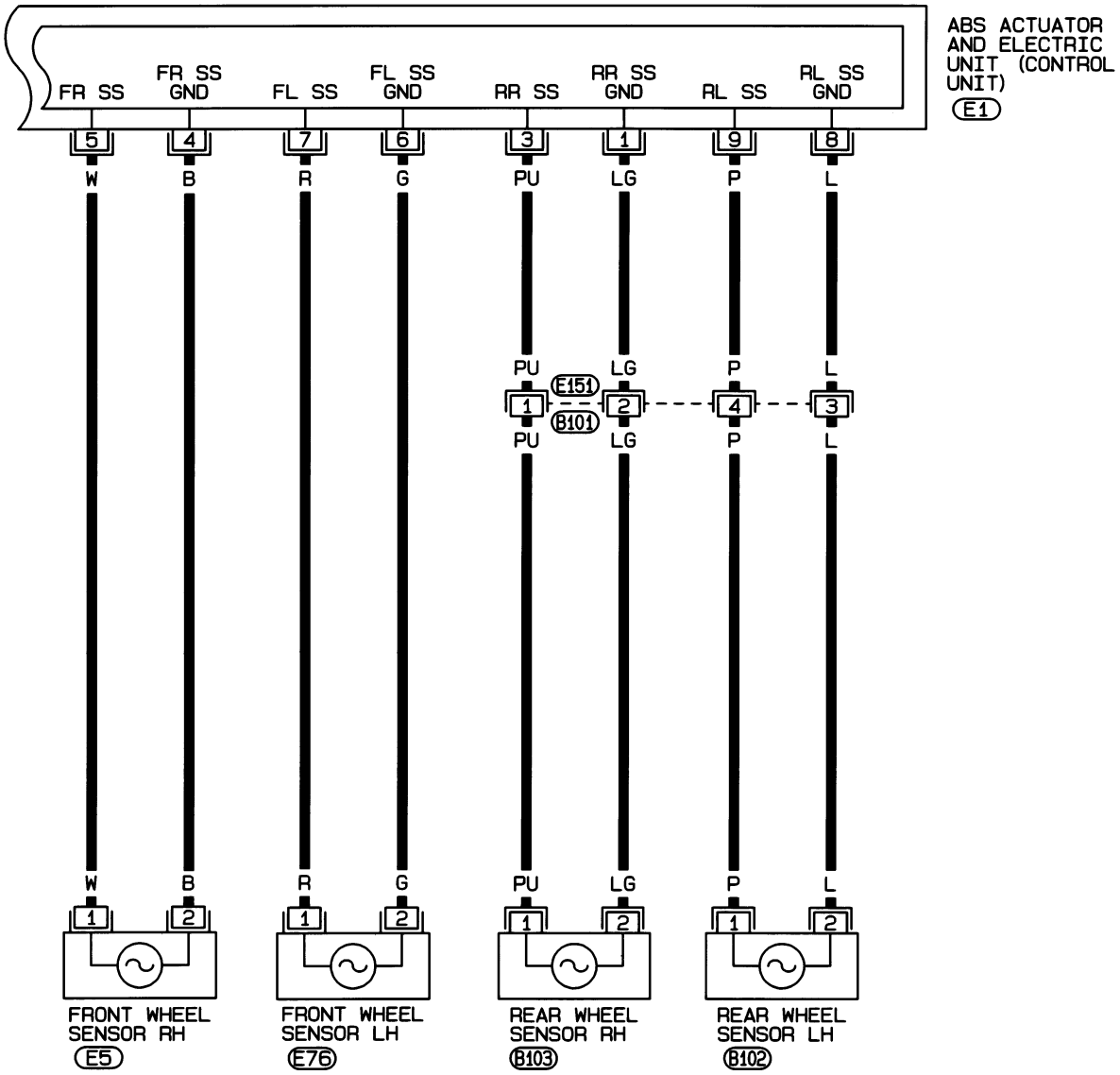

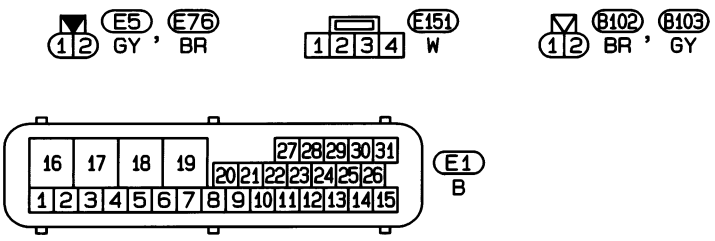

HBR123

Schematic/Hatchback

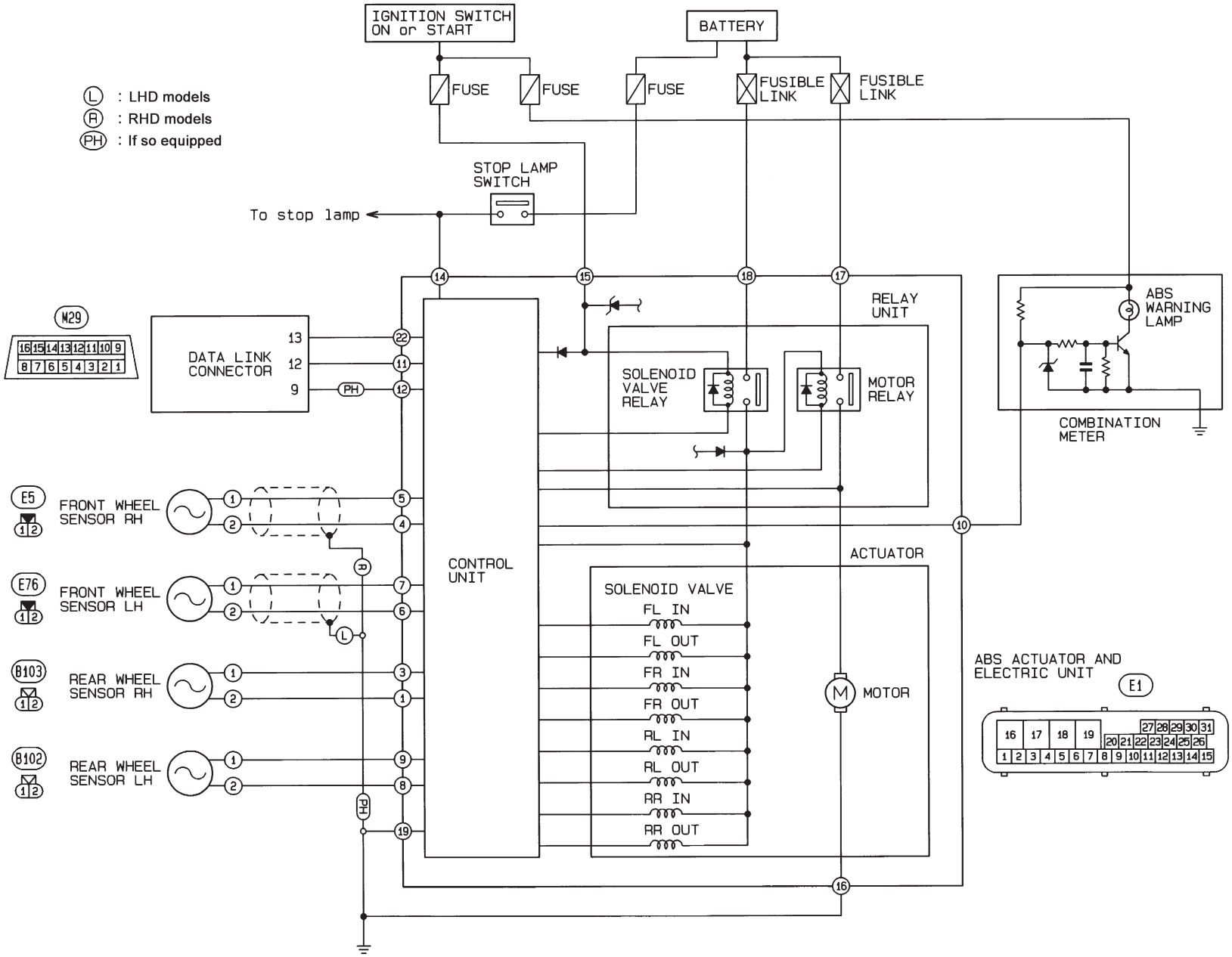

Wiring Diagram — ABS —/Hatchback

NJBR0138

MODELS WITH SELF-DIAGNOSIS FUNCTION (DATA LINK CONNECTOR TERMINAL NO. 9)

NJBR0138S01

BR-ABS-05

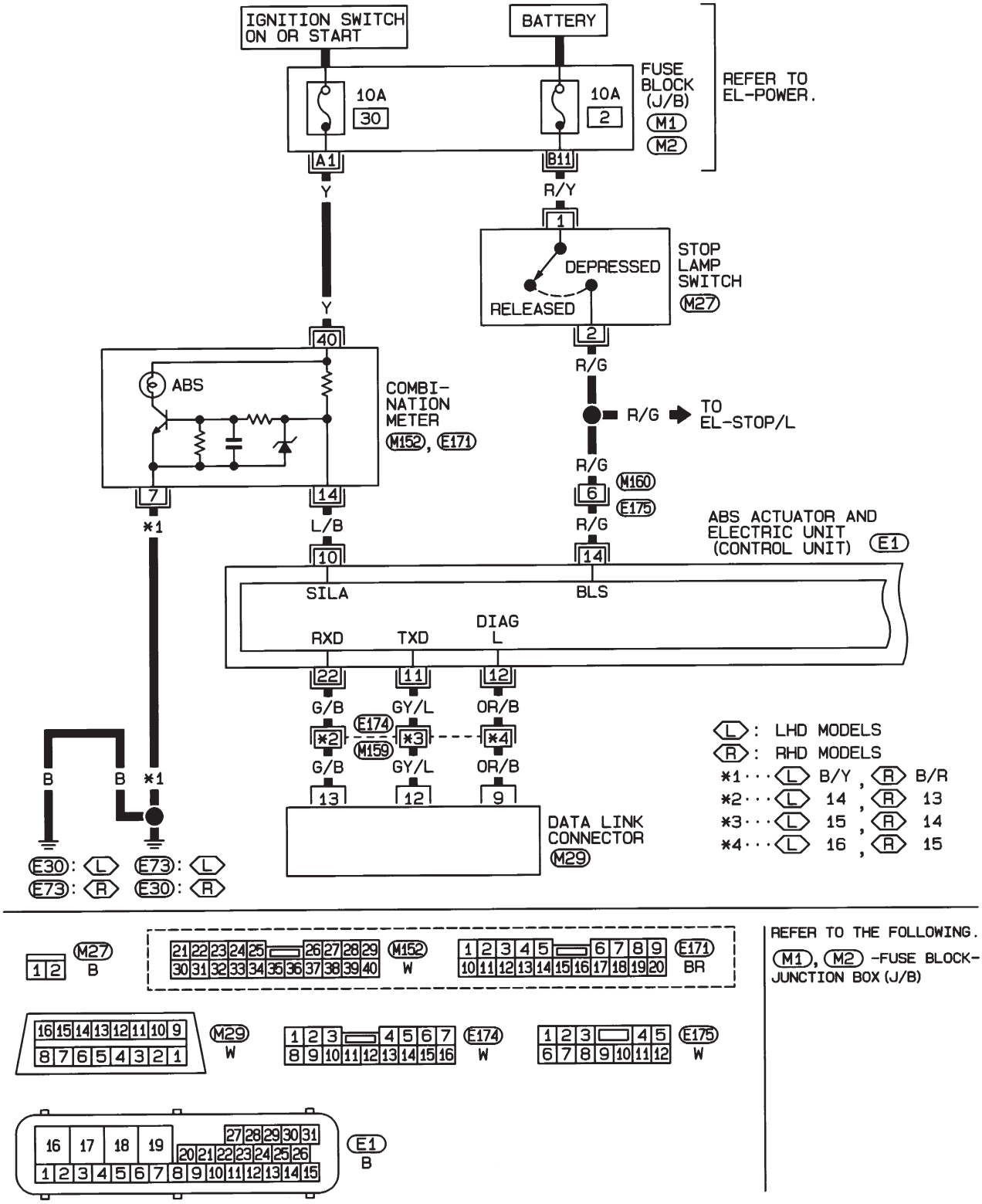

HBR106

MODELS WITHOUT SELF-DIAGNOSIS FUNCTION (DATA LINK CONNECTOR TERMINAL NO. 9)

NJBR0138S02

BR-ABS-06

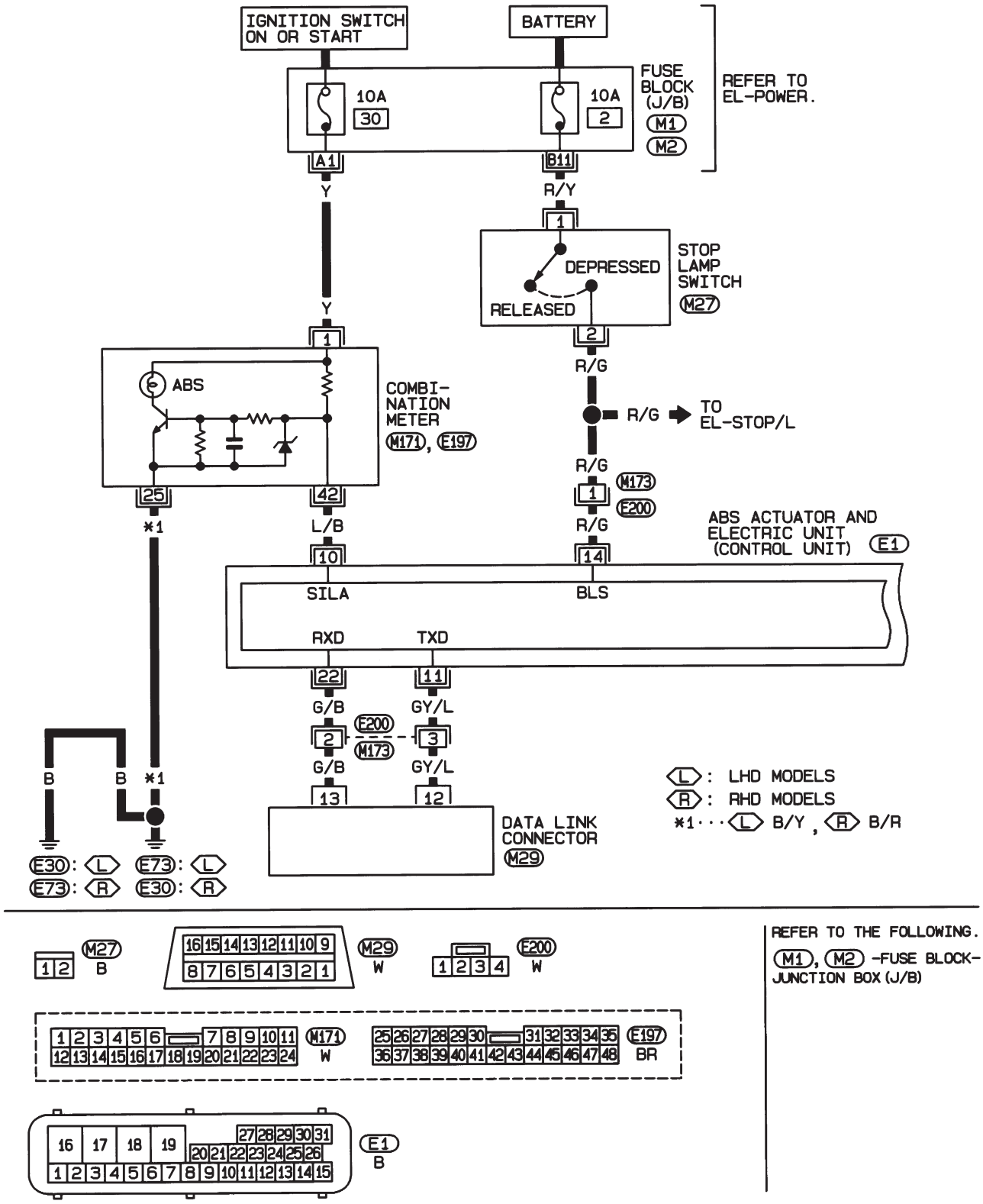

HBR136

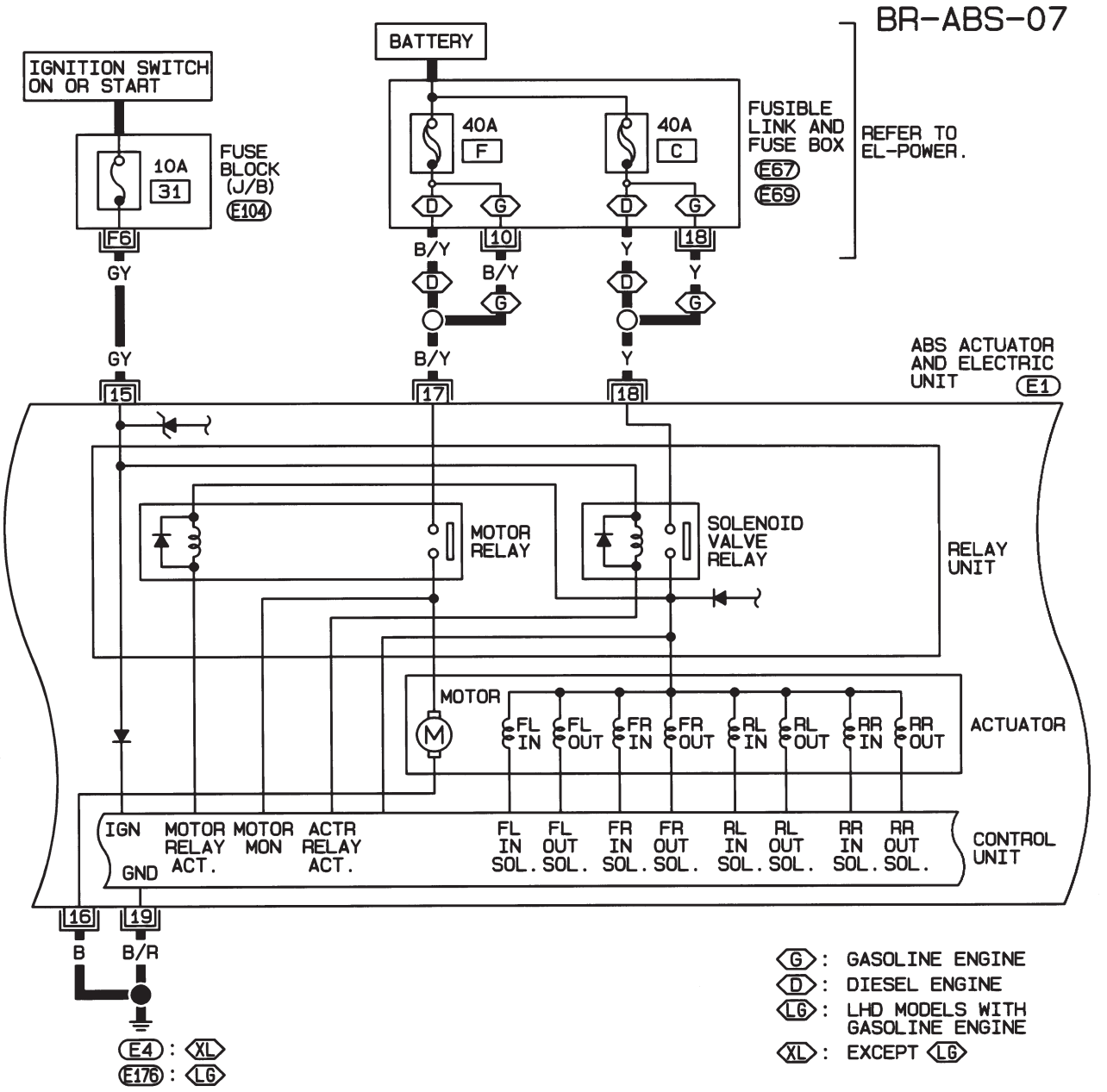

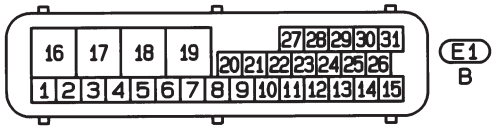

REFER TO THE FOLLOWING.

E104 -FUSE BLOCK-JUNCTION BOX (J/B)

E67, E69 -FUSE AND FUSIBLE LINK BOX

HBR137

BR-ABS-08

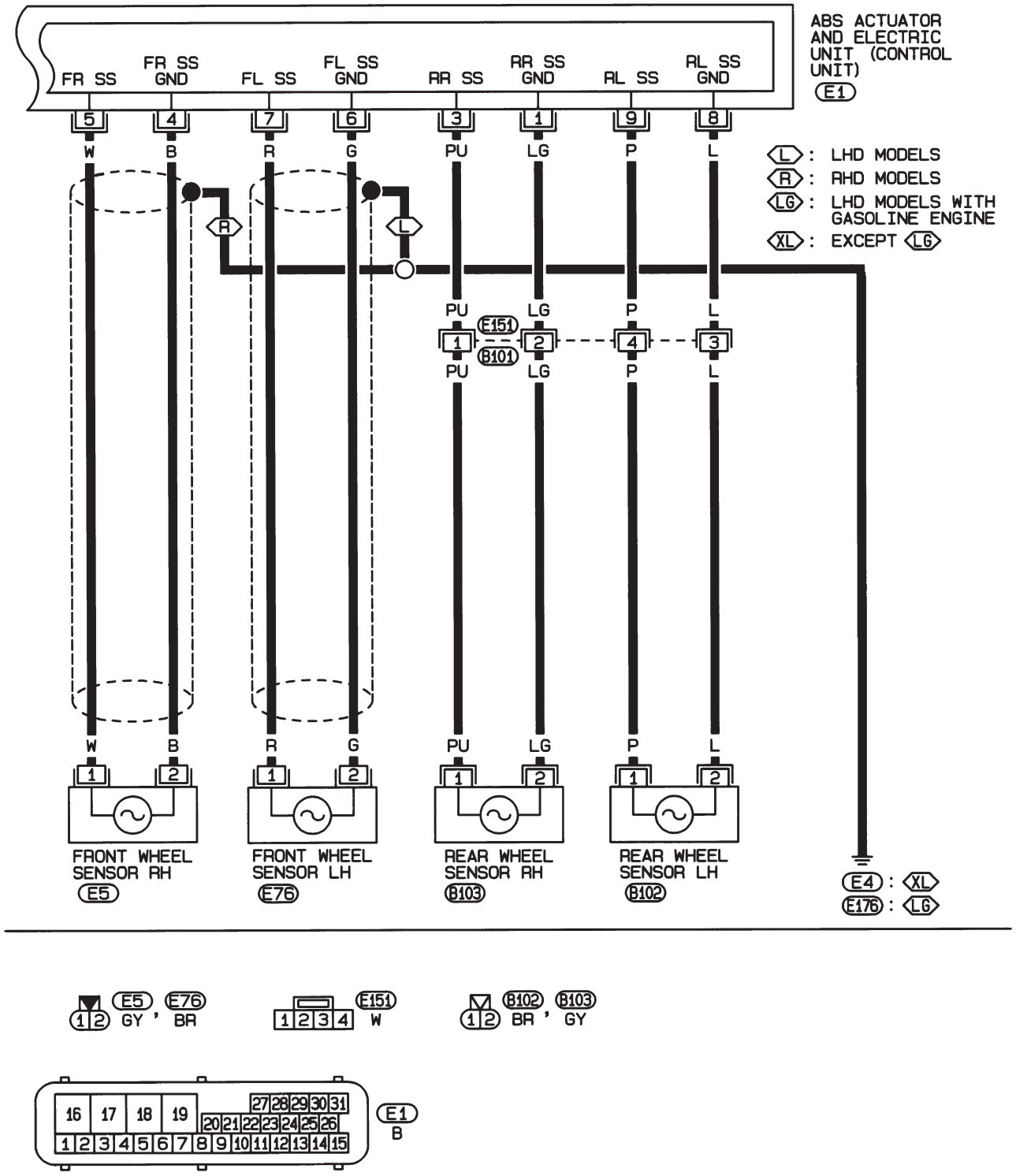

HBR138

Self-diagnosis (Only Models with Data Link Connector Terminal No. 9)

NJBR0091

FUNCTION

NJBR0091S01

- When a problem occurs in the ABS, the ABS warning lamp on the instrument panel comes on. To start the self-diagnostic results mode, ground the self-diagnostic (check) terminal located on “Data link connector”. The location of the malfunction is indicated by the ABS warning lamp flashing.

SELF-DIAGNOSIS PROCEDURE

NJBR0091S02

1. Drive vehicle over 30 km/h (19 MPH) for at least one minute.
2. Turn ignition switch “OFF”.

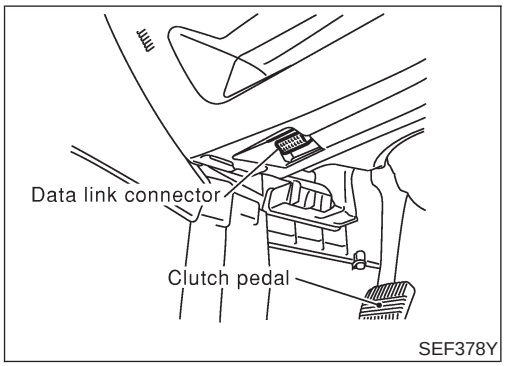

SEF378Y

3. Ground terminal “9” of “Data link connector” with a suitable harness.
4. Turn ignition switch “ON” while grounding terminal “9”.
   Do not depress brake pedal.
   Do not start engine.

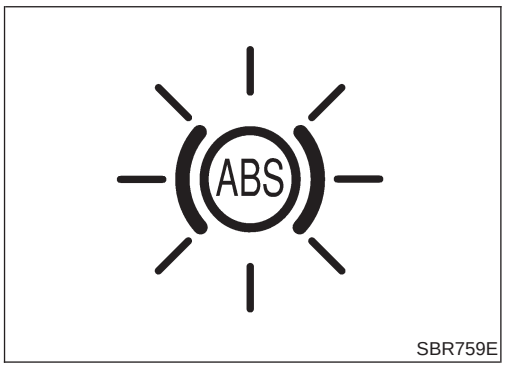

SBR759E

5. After 3.0 seconds, the ABS warning lamp starts flashing to indicate the malfunction code No. (See NOTE.)
6. Verify the location of the malfunction with the malfunction code chart. Refer to BR-76. Then make the necessary repairs following the diagnostic procedures.
7. After the malfunctions are repaired, erase the malfunction codes stored in the control unit. Refer to BR-64.
8. Rerun the self-diagnostic results mode to verify that the malfunction codes have been erased.

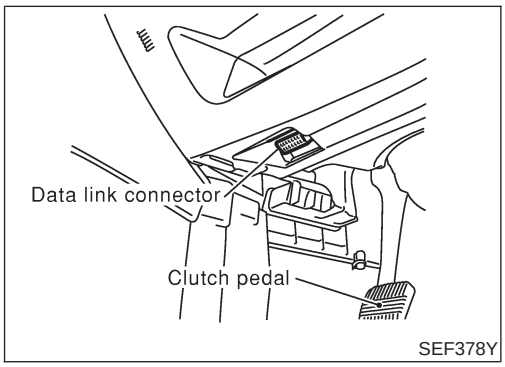

SEF378Y

9. Disconnect the check terminal from the ground. The self-diagnostic results mode is now complete.
10. Check ABS warning lamp for deactivation after driving vehicle over 30 km/h (19 MPH) for at least one minute.
11. After making certain that ABS warning lamp does not come on, test the ABS SELF-DIAGNOSIS in a safe area to verify that it functions properly.

NOTE:
The indication terminates after five minutes.
However, when the ignition switch is turned from “OFF” to “ON”, the indication starts flashing again.

HOW TO READ SELF-DIAGNOSTIC RESULTS (MALFUNCTION CODES)

NJBR0091S03

1. Determine the code No. by counting the number of times the ABS warning lamp flashes on and off.
2. When several malfunctions occur at one time, up to three code numbers can be stored; the latest malfunction will be indicated first.
3. The indication begins with the start code 12. After that a maximum of three code numbers appear in the order of the latest one first. The indication then returns to the start code 12 to repeat (the indication will stay on for five minutes at the most).
4. The malfunction code chart is given on the BR-76 page.

Example: Code No. 32 REAR SENSOR SHORT-CIRCUIT

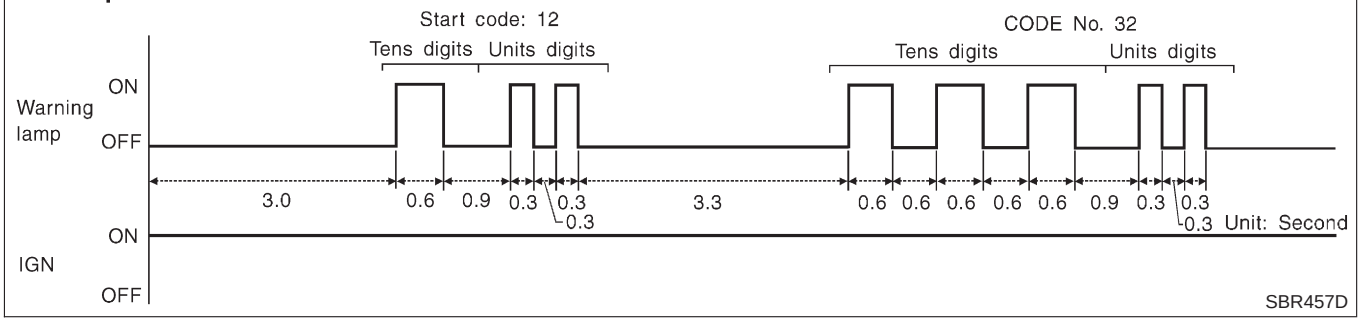

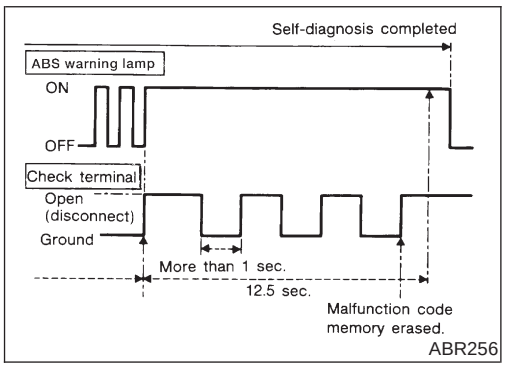

HOW TO ERASE SELF-DIAGNOSTIC RESULTS (MALFUNCTION CODES)

NJBR0091S04

1. Disconnect the check terminal from ground (ABS warning lamp will stay lit).
2. Within 12.5 seconds, ground the check terminal 3 times. Each terminal ground must last more than 1 second. The ABS warning lamp goes out after the erase operation has been completed.
3. Perform self-diagnosis again. Refer to BR-63. Only the start code should appear, no malfunction codes.

CONSULT-II

NJBR0092

CONSULT-II APPLICATION TO ABS

NJBR0092S01

ITEM	SELF-DIAGNOSTIC RESULTS	DATA MONITOR	ACTIVE TEST
Front right wheel sensor	X	X	—
Front left wheel sensor	X	X	—
Rear right wheel sensor	X	X	—
Rear left wheel sensor	X	X	—
Stop lamp switch	—	X	—
Front right inlet solenoid valve	X	X	X
Front right outlet solenoid valve	X	X	X
Front left inlet solenoid valve	X	X	X
Front left outlet solenoid valve	X	X	X
Rear right inlet solenoid valve	X	X	X
Rear right outlet solenoid valve	X	X	X
Rear left inlet solenoid valve	X	X	X
Rear left outlet solenoid valve	X	X	X
Actuator solenoid valve relay	X	X	—
Actuator motor relay (ABS MOTOR is shown on the ACTIVE TEST screen.)	X	X	X
ABS warning lamp	—	X	—
Battery voltage	X	X	—
Control unit	X	—	—

X: Applicable
—: Not applicable

ECU (ABS CONTROL UNIT) PART NUMBER MODE

NJBR0092S02

Ignore the ECU part number displayed in the ECU PART NUMBER MODE. Refer to parts catalog to order the ABS actuator and electric unit.

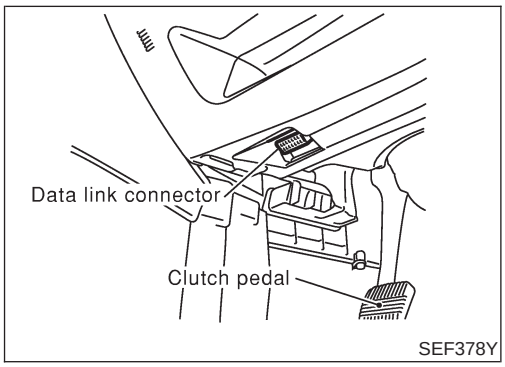

CONSULT-II Inspection Procedure

NJBR0093

SELF-DIAGNOSIS PROCEDURE

NJBR0093S01

1. Turn ignition switch OFF.
2. Connect CONSULT-II to data link connector.
3. Start engine.
4. Drive vehicle over 30 km/h (19 MPH) for at least one minute.

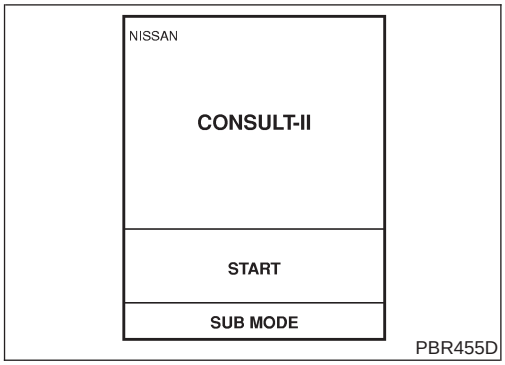

PBR455D

5. Stop vehicle with engine running and touch "START" on CONSULT-II screen.

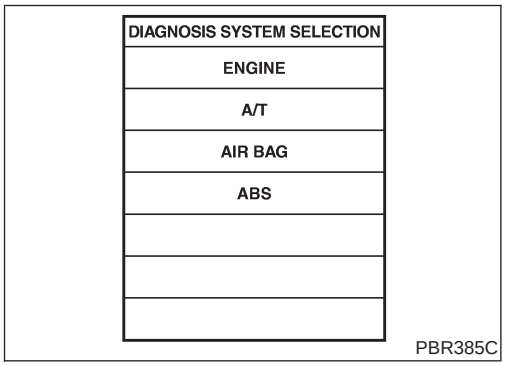

PBR385C

6. Touch "ABS".

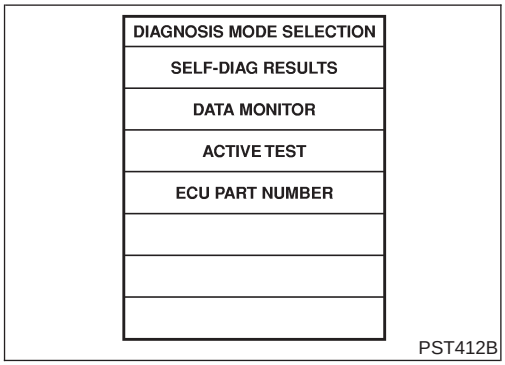

PST412B

7. Touch "SELF-DIAG RESULTS".
- The screen shows the detected malfunction and how many times the ignition switch has been turned since the malfunction.
8. Make the necessary repairs following the diagnostic procedures.

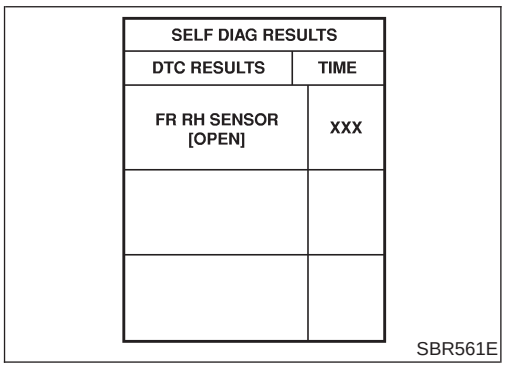

SBR561E

9. After the malfunctions are repaired, erase the self-diagnostic results stored in the control unit by touching "ERASE".
10. Check ABS warning lamp for deactivation after driving vehicle over 30 km/h (19 MPH) for at least one minute.

NOTE:
"SELF-DIAG RESULTS" screen shows the detected malfunction and how many times the ignition switch has been turned since the malfunction.

SELF-DIAGNOSTIC RESULTS MODE

=NJBR0093S02

Diagnostic item	Diagnostic item is detected when ...	Reference Page
FR RH SENSOR [OPEN]*1	● Circuit for front right wheel sensor is open. (An abnormally high input voltage is entered.)	BR-78
FR LH SENSOR [OPEN]*1	● Circuit for front left wheel sensor is open. (An abnormally high input voltage is entered.)	BR-78
RR RH SENSOR [OPEN]*1	● Circuit for rear right sensor is open. (An abnormally high input voltage is entered.)	BR-78
RR LH SENSOR [OPEN]*1	● Circuit for rear left sensor is open. (An abnormally high input voltage is entered.)	BR-78
FR RH SENSOR [SHORT]*1	● Circuit for front right wheel sensor is shorted. (An abnormally low input voltage is entered.)	BR-78
FR LH SENSOR [SHORT]*1	● Circuit for front left wheel sensor is shorted. (An abnormally low input voltage is entered.)	BR-78
RR RH SENSOR [SHORT]*1	● Circuit for rear right sensor is shorted. (An abnormally low input voltage is entered.)	BR-78
RR LH SENSOR [SHORT]*1	● Circuit for rear left sensor is shorted. (An abnormally low input voltage is entered.)	BR-78
ABS SENSOR [ABNORMAL SIGNAL]	● Teeth damage on sensor rotor or improper installation of wheel sensor. (Abnormal wheel sensor signal is entered.)	BR-78
FR RH IN ABS SOL [OPEN]	● Circuit for front right inlet solenoid valve is open. (An abnormally low output voltage is entered.)	BR-81
FR LH IN ABS SOL [OPEN]	● Circuit for front left inlet solenoid valve is open. (An abnormally low output voltage is entered.)	BR-81
RR RH IN ABS SOL [OPEN]	● Circuit for rear right inlet solenoid valve is open. (An abnormally low output voltage is entered.)	BR-81
RR LH IN ABS SOL [OPEN]	● Circuit for rear left inlet solenoid valve is open. (An abnormally low output voltage is entered.)	BR-81
FR RH IN ABS SOL [SHORT]	● Circuit for front right inlet solenoid valve is shorted. (An abnormally high output voltage is entered.)	BR-81
FR LH IN ABS SOL [SHORT]	● Circuit for front left inlet solenoid valve is shorted. (An abnormally high output voltage is entered.)	BR-81
RR RH IN ABS SOL [SHORT]	● Circuit for rear right inlet solenoid valve is shorted. (An abnormally high output voltage is entered.)	BR-81
RR LH IN ABS SOL [SHORT]	● Circuit for rear left inlet solenoid valve is shorted. (An abnormally high output voltage is entered.)	BR-81
FR RH OUT ABS SOL [OPEN]	● Circuit for front right outlet solenoid valve is open. (An abnormally low output voltage is entered.)	BR-81
FR LH OUT ABS SOL [OPEN]	● Circuit for front left outlet solenoid valve is open. (An abnormally low output voltage is entered.)	BR-81
RR RH OUT ABS SOL [OPEN]	● Circuit for rear right outlet solenoid valve is open. (An abnormally low output voltage is entered.)	BR-81
RR LH OUT ABS SOL [OPEN]	● Circuit for rear left outlet solenoid valve is open. (An abnormally low output voltage is entered.)	BR-81
FR RH OUT ABS SOL [SHORT]	● Circuit for front right outlet solenoid valve is shorted. (An abnormally high output voltage is entered.)	BR-81
FR LH OUT ABS SOL [SHORT]	● Circuit for front left outlet solenoid valve is shorted. (An abnormally high output voltage is entered.)	BR-81

Diagnostic item	Diagnostic item is detected when ...	Reference Page
RR RH OUT ABS SOL [SHORT]	● Circuit for rear right outlet solenoid valve is shorted. (An abnormally high output voltage is entered.)	BR-81
RR LH OUT ABS SOL [SHORT]	● Circuit for rear left outlet solenoid valve is shorted. (An abnormally high output voltage is entered.)	BR-81
ABS ACTUATOR RELAY [ABNORMAL]	● Actuator solenoid valve relay is ON, even control unit sends off signal. ● Actuator solenoid valve relay is OFF, even control unit sends on signal.	BR-81
ABS MOTOR RELAY [ABNORMAL]	● Circuit for actuator motor is open or shorted. ● Actuator motor relay is stuck.	BR-84
BATTERY VOLT [ABNORMAL]	● Power source voltage supplied to ABS control unit is abnormally low.	BR-86
CONTROL UNIT	● Function of calculation in ABS control unit has failed.	BR-88

*1: Be sure to confirm the ABS warning lamp illuminates when the ignition switch is turned ON after repairing the shorted sensor circuit, but the lamp goes out when driving the vehicle over 30 km/h (19 MPH) for one minute in accordance with SELF-DIAGNOSIS PROCEDURE.

DATA MONITOR PROCEDURE

NJBR0093S03

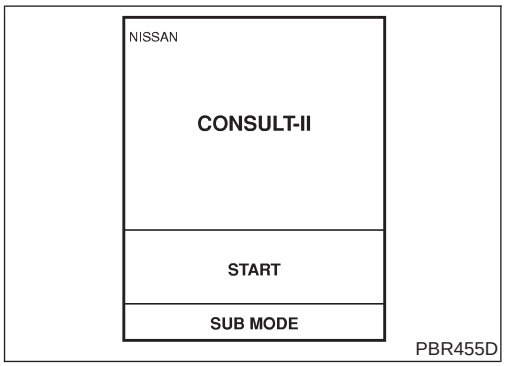

PBR455D

1. Turn ignition switch OFF.
2. Connect CONSULT-II to data link connector.
3. Turn ignition switch ON.
4. Touch "START" on CONSULT-II screen.

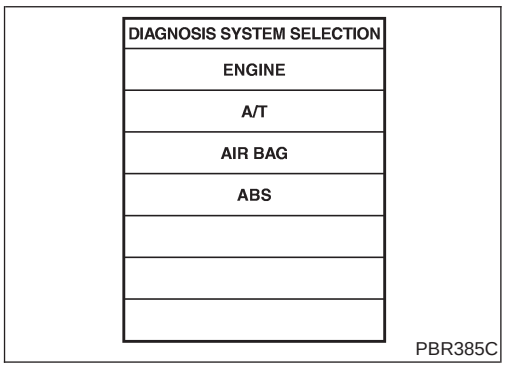

PBR385C

5. Touch "ABS".

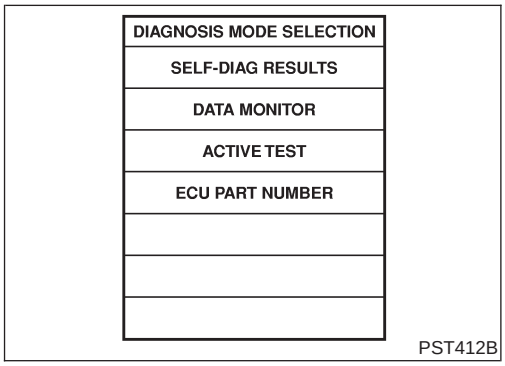

PST412B

6. Touch "DATA MONITOR".
7. Touch "SETTING" on "SELECT MONITOR ITEM" screen.
8. Touch "LONG TIME" on "SET RECORDING COND" screen.
9. Touch "START" on "SELECT MONITOR ITEM".

ACTIVE TEST PROCEDURE

NJBR0093S04

- When conducting Active test, vehicle must be stationary.
- When ABS warning lamp stays on, never conduct Active test.

1. Turn ignition switch OFF.
2. Connect CONSULT-II to data link connector.
3. Start engine.
4. Touch "START" on CONSULT-II screen.

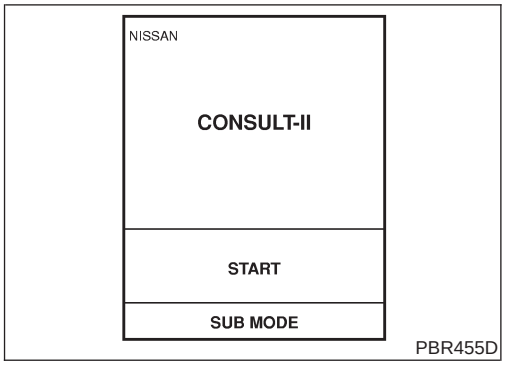

PBR455D

5. Touch "ABS".

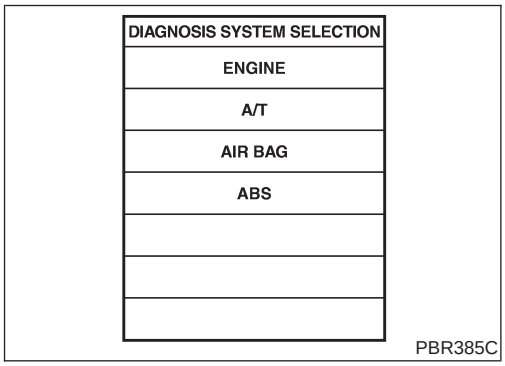

PBR385C

6. Touch "ACTIVE TEST".

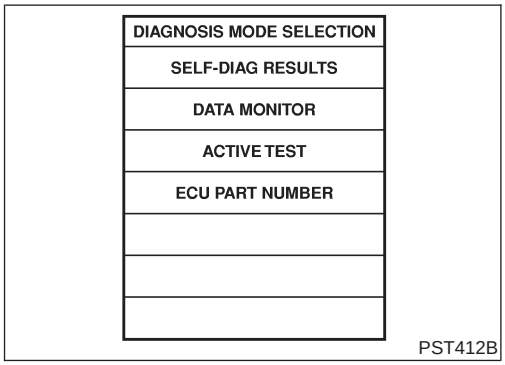

PST412B

7. Select active test item by touching screen.

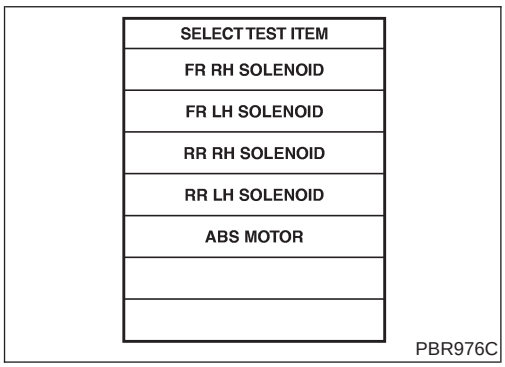

PBR976C

8. Touch "START".
9. Carry out the active test by touching screen key.

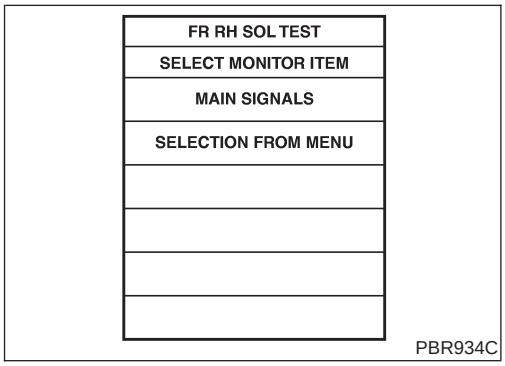

PBR934C

DATA MONITOR MODE

NJBR0093S05

MONITOR ITEM	CONDITION	SPECIFICATION
FR RH SENSOR FR LH SENSOR RR RH SENSOR RR LH SENSOR	Drive vehicle. (Each wheel is rotating.)	Displays computed vehicle speed from wheel sensor signal. Almost the same speed as speedometer.
STOP LAMP SW	Turn ignition switch ON and depress brake pedal.	Depress the pedal: ON Release the pedal: OFF
FR RH IN SOL FR RH OUT SOL FR LH IN SOL FR LH OUT SOL RR IN SOL RR OUT SOL RL IN SOL RL OUT SOL	Ignition switch is turned ON or engine is running.	Operating conditions for each solenoid valve are indicated. ABS is not operating: OFF
ACTUATOR RLY	Ignition switch is turned ON or engine is running.	Displays ON/OFF condition of ABS actuator relay. When turning ignition switch ON, ABS actuator relay is operated.
MOTOR RELAY		ABS is not operating: OFF ABS is operating: ON
WARNING LAMP		Warning lamp is turned on: ON Warning lamp is turned off: OFF
BATTERY VOLT		Power supply voltage for control unit

ACTIVE TEST MODE

NJBR0093S06

TEST ITEM	CONDITION	JUDGEMENT		
FR RH SOLENOID FR LH SOLENOID RR RH SOLENOID RR LH SOLENOID	Ignition switch is turned ON.	Brake fluid pressure control operation		
			IN SOL	OUT SOL
		UP (Increase):	OFF	OFF
		KEEP (Hold):	ON	OFF
		DOWN (Decrease):	ON	ON
ABS MOTOR		ABS actuator motor ON: Motor runs OFF: Motor stops		

NOTE:
Active test will automatically stop ten seconds after the test starts. (TEST IS STOPPED monitor shows ON.)

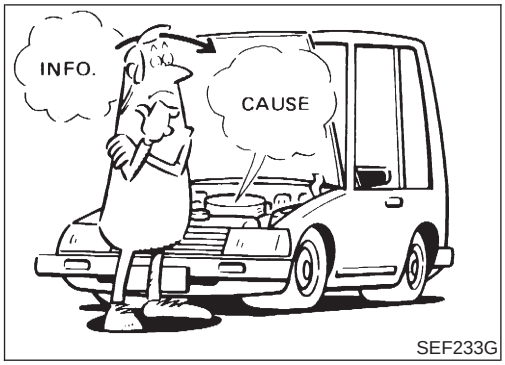

SEF233G

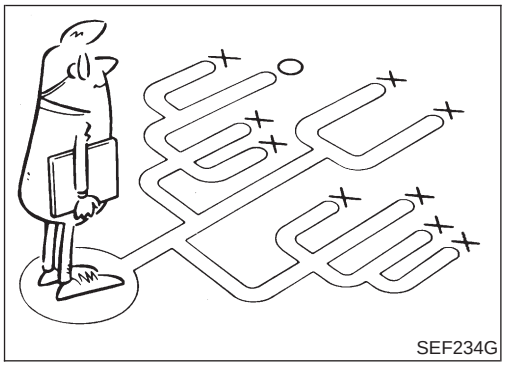
SEF234G

How to Perform Trouble Diagnoses for Quick and Accurate Repair

NJBR0094

INTRODUCTION

NJBR0094S01

The ABS system has an electronic control unit to control major functions. The control unit accepts input signals from sensors and instantly drives actuator. It is essential that both kinds of signals are proper and stable. It is also important to check for conventional problems: such as air leaks in the booster or lines, lack of brake fluid, or other problems with the brake system.

It is much more difficult to diagnose a problem that occurs intermittently rather than continuously. Most intermittent problems are caused by poor electric connections or faulty wiring. In this case, careful checking of suspicious circuits may help prevent the replacement of good parts.

A visual check only may not find the cause of the problems, so a road test should be performed.

Before undertaking actual checks, take just a few minutes to talk with a customer who approaches with a ABS complaint. The customer is a very good source of information on such problems; especially intermittent ones. Through the talks with the customer, find out what symptoms are present and under what conditions they occur.

Start your diagnosis by looking for “conventional” problems first. This is one of the best ways to troubleshoot brake problems on an ABS controlled vehicle. Also check related Service Bulletins for information.

Preliminary Check

NJBR0095

1	CHECK BRAKE FLUID LEVEL

Check brake fluid level in reservoir tank.
Low fluid level may indicate brake pad wear or leakage from brake line.

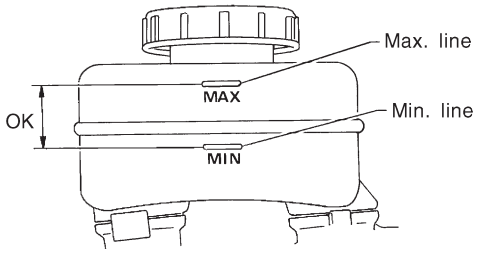

SBR451D

Is brake fluid filled between MAX and MIN lines on reservoir tank and/or has brake fluid been contaminated?

Yes	▶	GO TO 2.
No	▶	Repair. GO TO 2.

2	CHECK BRAKE LINE

Check brake line for leakage.

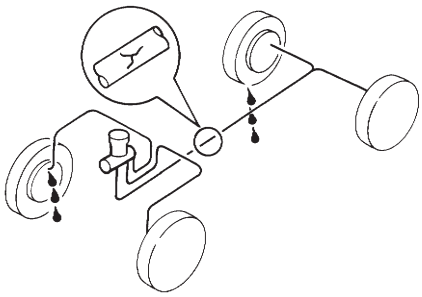

SBR389C

Is leakage present at or around brake lines, tubes or hoses or are any of these parts cracked or damaged?

Yes	▶	GO TO 3.
No	▶	Repair. GO TO 3.

3	CHECK BRAKE BOOSTER OPERATION

Check brake booster for operation and air tightness.
Refer to BR-20.

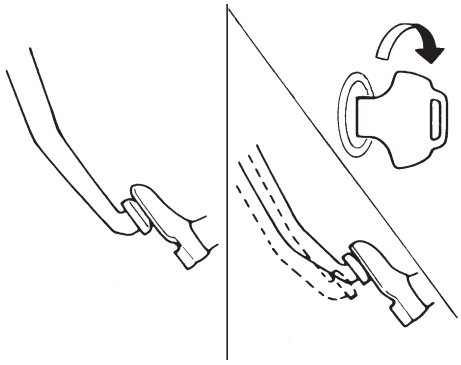

SBR058C

Is brake booster airtight and functioning properly?

Yes	▶	GO TO 4.
No	▶	Replace. GO TO 4.

4	CHECK BRAKE PAD AND ROTOR

Check brake pad or lining and rotor or drum.
Refer to BR-27, 29, 33, 33, 35, 39.

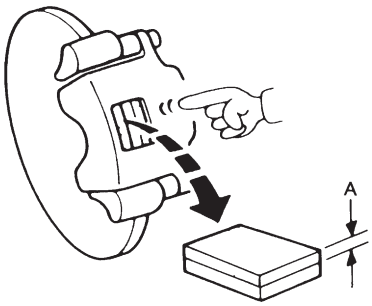

SBR059C

Are brake pads and rotors functioning properly?

Yes	▶	GO TO 5.
No	▶	Replace.

5	RECHECK BRAKE FLUID LEVEL

Check brake fluid level in reservoir tank again.

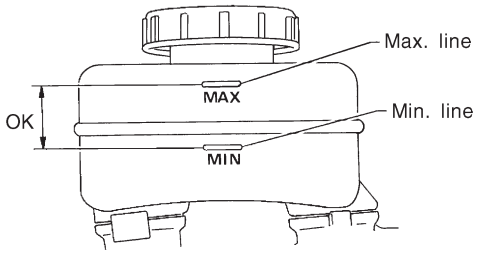

SBR451D

Is brake fluid filled between MAX and MIN lines on reservoir tank and/or has brake fluid been contaminated?

Yes	▶	GO TO 6.
No	▶	Fill up brake fluid.

6	CHECK WARNING LAMP ACTIVATION

Check warning lamp activation.

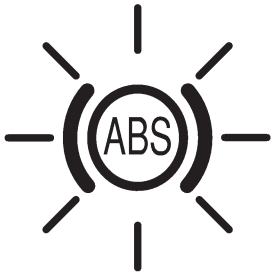

SBR759E

Does warning lamp turn on when ignition switch is turned "ON"?

Yes	▶	GO TO 7.
No	▶	Check fuse, warning lamp bulb and warning lamp circuit.

7	CHECK WARNING LAMP DEACTIVATION

Check warning lamp for deactivation after engine is started.

Does warning lamp turn off when engine is started?

Yes	▶	GO TO 8.
No	▶	Go to Self-diagnosis. Refer to BR-63, 65.

8	DRIVE VEHICLE

Drive vehicle at speeds over 30 km/h (19 MPH) for at least one minute.

Does warning lamp remain off after vehicle has been driven at 30 km/h (19 MPH) for at least one minute?

Yes	▶	END
No	▶	Go to Self-diagnosis. Refer to BR-63, 65.

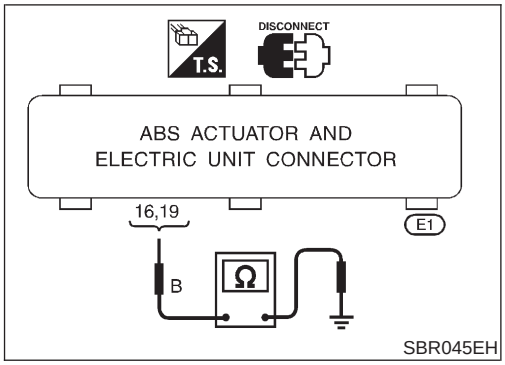

Ground Circuit Check

NJBR0096

ABS ACTUATOR AND ELECTRIC UNIT GROUND

NJBR0096S04

- Check continuity between ABS actuator and electric unit connector terminals and ground.

  Continuity should exist.

Malfunction Code/Symptom Chart

NJBR0097

MODELS WITH SELF-DIAGNOSIS FUNCTION (DATA LINK CONNECTOR TERMINAL NO. 9)

NJBR0097S01

Code No. (No. of LED flashes)	Malfunctioning part	Reference page
12	Self-diagnosis could not detect any malfunctions.	—
18	Sensor rotor	BR-78
21	Front right sensor (open-circuit)	BR-78
22	Front right sensor (short-circuit)	BR-78
25	Front left sensor (open-circuit)	BR-78
26	Front left sensor (short-circuit)	BR-78
31	Rear right sensor (open-circuit)	BR-78
32	Rear right sensor (short-circuit)	BR-78
35	Rear left sensor (open-circuit)	BR-78
36	Rear left sensor (short-circuit)	BR-78
41	Actuator front right outlet solenoid valve	BR-81
42	Actuator front right inlet solenoid valve	BR-81
45	Actuator front left outlet solenoid valve	BR-81
46	Actuator front left inlet solenoid valve	BR-81
51	Actuator rear right outlet solenoid valve	BR-81
52	Actuator rear right inlet solenoid valve	BR-81
55	Actuator rear left outlet solenoid valve	BR-81
56	Actuator rear left inlet solenoid valve	BR-81
57*	Power supply (Low voltage)	BR-86
61	Actuator motor or motor relay	BR-84
63	Solenoid valve relay	BR-81
71	Control unit	BR-88
ABS warning lamp stays on when ignition switch is turned on.	Control unit power supply circuit Warning lamp bulb circuit Control unit or control unit connector Solenoid valve relay stuck Power supply for solenoid valve relay coil	BR-95
ABS warning lamp stays on, during self-diagnosis.	Control unit	—
ABS warning lamp does not come on when ignition switch is turned on.	Fuse, warning lamp bulb or warning lamp circuit Control unit	BR-93
ABS warning lamp does not come on during self-diagnosis.	Control unit	—
Pedal vibration and noise	—	BR-92
Long stopping distance	—	BR-90
Unexpected pedal action	—	BR-89
ABS does not work.	—	BR-91
ABS works frequently.	—	BR-89

*: Under voltage that is too low, the control unit disable the ABS. It does not set the ABS in fail-safe condition. Instead, the ABS becomes

a conventional brake system. After the power supply has resumed, the warning lamp goes off, making it possible for the ABS to be re-engaged.

Wheel Sensor or Rotor

NJBR0098

DIAGNOSTIC PROCEDURE

NJBR0098S01

(Malfunction code No. 21, 22, 25, 26, 31, 32, 35, 36 or 18 for models with self-diagnosis function)

NOTE:
Wheel position should be identified by code No. except code No. 18 (sensor rotor).

1	INSPECTION START
Wheel sensor inspection	

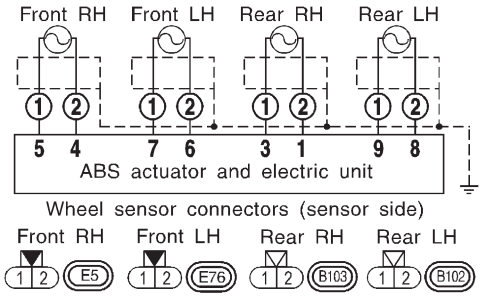

SBR476EB

	▶	GO TO 2.

2	CHECK CONNECTOR
1. Disconnect connectors from control unit and wheel sensor of malfunction code No. Check terminals for damage or loose connections. Then reconnect connectors. 2. Carry out self-diagnosis again.	
Does warning lamp activate again?	

Yes	▶	GO TO 3.
No	▶	**INSPECTION END**

3	CHECK WHEEL SENSOR CIRCUIT

1. Disconnect control unit connector.
2. Check resistance between control unit connector terminals.
   Code No. 21 or 22 (Front RH wheel)
   Terminals 4 and 5
   Code No. 25 or 26 (Front LH wheel)
   Terminals 6 and 7
   Code No. 31 or 32 (Rear RH wheel)
   Terminals 1 and 3
   Code No. 35 or 36 (Rear LH wheel)
   Terminals 8 and 9
   Resistance: 1.44 - 1.76 kΩ

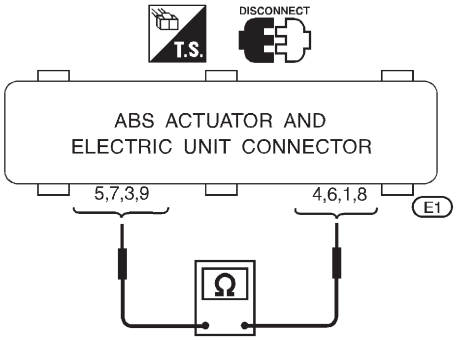

SBR477EC

Is resistance 1.44 - 1.76 kΩ?

Yes	▶	GO TO 5.
No	▶	GO TO 4.

4	CHECK WHEEL SENSOR

Check resistance of each sensor. (See NOTE.)
Resistance: 1.44 - 1.76 kΩ

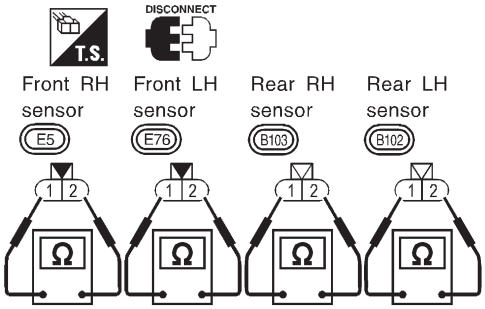

SBR478EC

Is resistance 1.44 - 1.76 kΩ?

Yes	▶	Repair harness and connectors between control unit connector and wheel sensor connector.
No	▶	Replace wheel sensor.

5	CHECK TIRE

Check for inflation pressure, wear and size of each tire.

Are tire pressure and size correct and is tire wear within specifications?

Yes	▶	GO TO 6.
No	▶	Adjust tire pressure or replace tire(s).

6	CHECK WHEEL BEARING

Check wheel bearing axial end play.
Check clearance between sensor and rotor.

Clearance:
Front
0.7 - 1.8 mm (0.028 - 0.071 in)
Rear
0.4 - 1.5 mm (0.016 - 0.059 in)

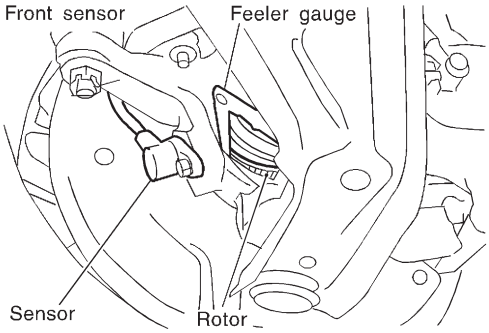

SBR333E

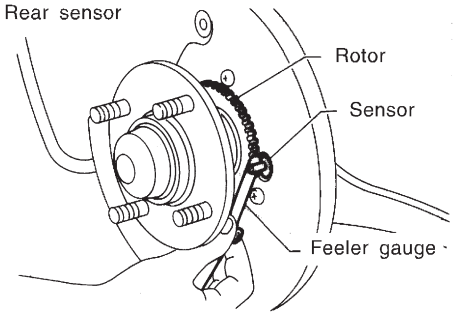

SBR069CA

Is axial end play and clearance within specifications?

Yes	▶	GO TO 7.
No	▶	Clean sensor fixing portion, or replace sensor.

7	CHECK SENSOR ROTOR

Check sensor rotor for teeth damage.

Is sensor rotor free from damage?

Yes	▶	Check control unit pin terminals for damage or the connection of control unit harness connector. Reconnect control unit harness connector. Then retest.
No	▶	Replace sensor rotor.

ABS Actuator Solenoid Valve or Solenoid Valve Relay

=NJBR0100

DIAGNOSTIC PROCEDURE

NJBR0100S01

(Malfunction code No. 41, 45, 55, 42, 46, 56, 63, 51, 52 for models with self-diagnosis function)

1	INSPECTION START

Solenoid valve relay inspection

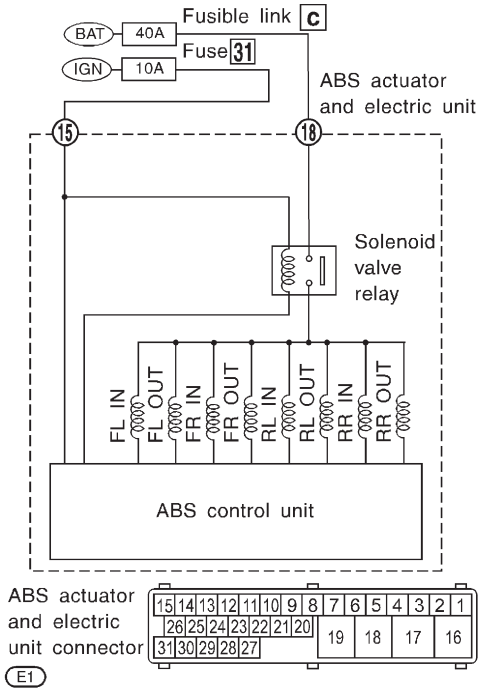

SBR761E

	▶	GO TO 2.

2	CHECK SOLENOID VALVE POWER SUPPLY CIRCUIT	

Check 40A [**c**] fusible link (ABS ACTR) for ABS solenoid valve relay. For fusible link layout, refer to POWER SUPPLY ROUTING in EL section.

Is fusible link OK?

Yes	▶	GO TO 3.
No	▶	GO TO 7.

3	CHECK FUSE	

Check 10A fuse No. 31. For fuse layout, refer to “POWER SUPPLY ROUTING” in EL section.

Is fuse OK?

Yes	▶	GO TO 4.
No	▶	GO TO 9.

4	CHECK CONNECTOR
1. Disconnect ABS actuator and electric unit connector. Check terminals for damage or loose connection. Then reconnect connector. 2. Carry out self-diagnosis again. **Does warning lamp activate again?**	
Yes ▶	GO TO 5.
No ▶	**INSPECTION END**

5	CHECK GROUND CIRCUIT
Refer to ABS ACTUATOR AND ELECTRIC UNIT in Ground Circuit Check, BR-75. **Is ground circuit OK?**	
Yes ▶	GO TO 6.
No ▶	Repair harness and connectors.

6	CHECK SOLENOID VALVE POWER SUPPLY CIRCUIT
1. Disconnect ABS actuator and electric unit connector. 2. Check voltage between ABS actuator and electric unit connector terminal 18 and ground.	

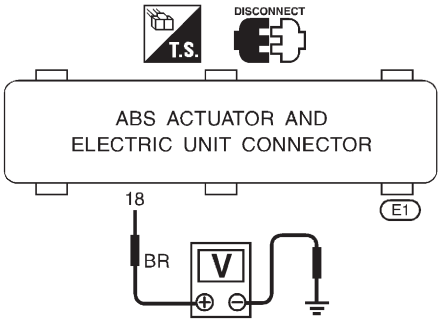

SBR052EF

Does battery voltage exist?	
Yes ▶	Replace ABS actuator and electric unit.
No ▶	**Check the following.** ● Harness connector E1 ● Harness for open or short between ABS actuator and electric unit and fusible link If NG, repair harness or connectors.

7	REPLACE FUSIBLE LINK
Replace fusible link. **Does the fusible link blow out when ignition switch is turned "ON"?**	
Yes ▶	GO TO 8.
No ▶	**INSPECTION END**

8	CHECK RELAY UNIT POWER SUPPLY CIRCUIT

1. Disconnect ABS actuator and electric unit connector.
2. Check continuity between ABS actuator and electric unit connector terminal 18 and ground.

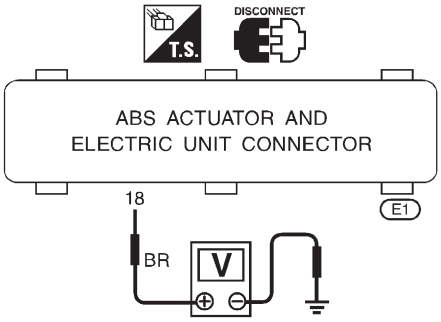

SBR052EF

Does continuity exist?

Yes	▶	Replace ABS actuator and electric unit.
No	▶	**Check the following.** ● Harness connector E1 ● Harness for open or short between ABS actuator and electric unit and fusible link If NG, repair harness or connectors.

9	REPLACE FUSE

Replace fuse.

Does the fuse blow out when ignition switch is turned "ON"?

Yes	▶	**Check the following.** ● Harness connector E1 ● Harness for open or short between ABS actuator and electric unit and fuse If NG, repair harness or connectors.
No	▶	**INSPECTION END**

Motor Relay or Motor

=NJBR0101

DIAGNOSTIC PROCEDURE

NJBR0101S01

(Malfunction code No. 61 for models with self-diagnosis function)

1	INSPECTION START

ABS motor relay inspection

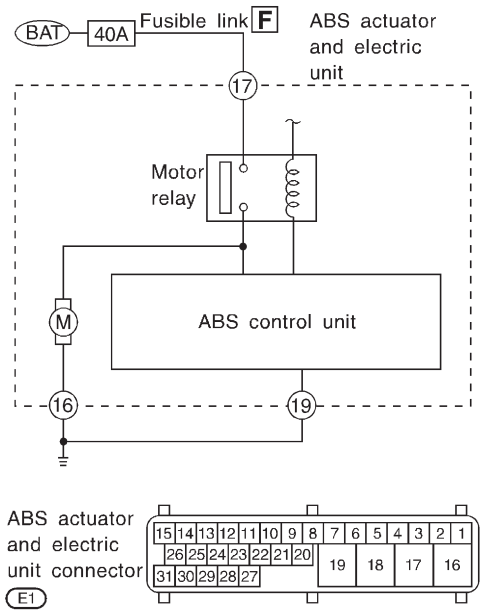

SBR760E

	▶	GO TO 2.

2	CHECK MOTOR POWER SUPPLY CIRCUIT

Check 40A [**F**] fusible link (ABS MTR) for ABS motor relay. For fusible link layout, refer to POWER SUPPLY ROUTING in EL section.

Is fusible link OK?

Yes	▶	GO TO 3.
No	▶	GO TO 6.

3	CHECK CONNECTOR

1. Disconnect ABS actuator and electric unit connector. Check terminals for damage or loose connection. Then reconnect connectors.
2. Carry out self-diagnosis again.

Does warning lamp activate again?

Yes	▶	GO TO 4.
No	▶	**INSPECTION END**

4	CHECK MOTOR RELAY POWER SUPPLY CIRCUIT

1. Disconnect ABS actuator and electric unit connector.
2. Check voltage between ABS actuator and electric unit connector terminal 17 and ground.

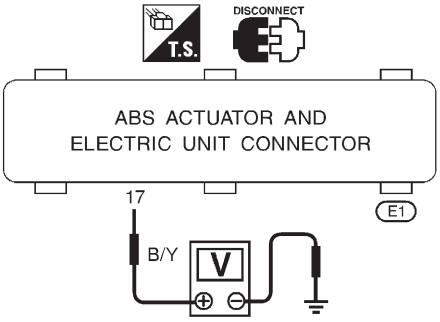

SBR055EF

Does battery voltage exist?

Yes	▶	GO TO 5.
No	▶	**Check the following.** ● Harness connector E1 ● Harness for open or short between ABS actuator and electric unit and fusible link If NG, repair harness or connectors.

5	CHECK ABS ACTUATOR AND ELECTRIC UNIT GROUND CIRCUIT

Refer to ABS ACTUATOR AND ELECTRIC UNIT GROUND in Ground Circuit Check, BR-75.

Is ground circuit OK?

Yes	▶	Replace ABS actuator and electric unit.
No	▶	**Check the following.** ● Harness connector E1 ● Harness for open or short between ABS actuator and electric unit and ground If NG, repair harness or connectors.

6	REPLACE FUSIBLE LINK

Replace fusible link.

Does the fusible link blow out when ignition switch is turned "ON"?

Yes	▶	GO TO 7.
No	▶	**INSPECTION END**

7	CHECK ABS ACTUATOR MOTOR POWER SUPPLY CIRCUIT

1. Disconnect battery cable and ABS actuator and electric unit connector.
2. Check continuity between ABS actuator and electric unit connector terminal 17 and ground.

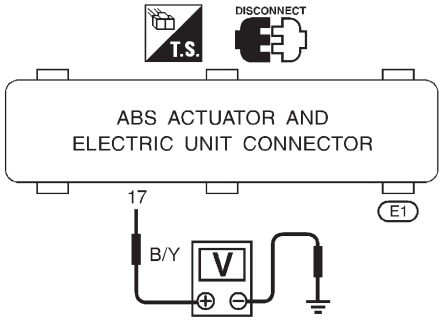

SBR055EF

Does continuity exist?

Yes	▶	Check ABS actuator and electric unit pin terminals for damage or the connection of ABS actuator and electric unit harness connector. Reconnect ABS actuator and electric unit harness connector. Then retest.
No	▶	**Check the following.** ● Harness connector E1 ● Harness for open or short between ABS actuator and electric unit and fusible link If NG, repair harness or connectors.

Low Voltage

NJBR0102

DIAGNOSTIC PROCEDURE

NJBR0102S01

(Malfunction code No. 57 for models with self-diagnosis function)

1	INSPECTION START

ABS actuator and electric unit power supply and ground circuit inspection

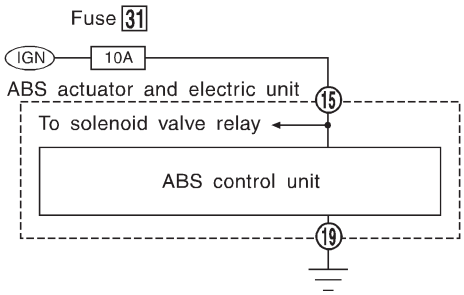

SBR625E

	▶	GO TO 2.

2	CHECK CONNECTOR	
1. Disconnect ABS actuator and electric unit connector. Check terminals for damage or loose connections. Then reconnect connector. 2. Carry out self-diagnosis again. **Does warning lamp activate again?**		
Yes	▶	GO TO 3.
No	▶	**INSPECTION END**

3	CHECK ABS ACTUATOR AND ELECTRIC UNIT POWER SUPPLY CIRCUIT	
1. Disconnect ABS actuator and electric unit connector. 2. Check voltage between ABS actuator and electric unit connector terminal 15 and ground.		

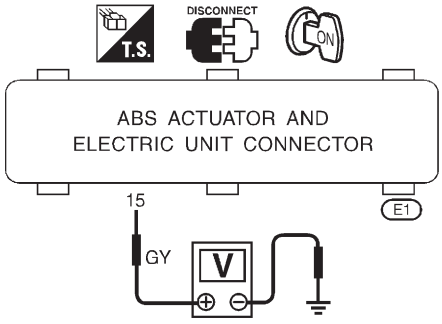

SBR058EH

Does battery voltage exist when ignition switch is turned ON?		
Yes	▶	GO TO 4.
No	▶	GO TO 5.

4	CHECK ABS ACTUATOR AND ELECTRIC UNIT GROUND	
Refer to ABS ACTUATOR AND ELECTRIC UNIT GROUND in Ground Circuit Check, BR-75. **Is ground circuit OK?**		
OK	▶	Check ABS actuator and electric unit pin terminals for damage or the connection of ABS actuator and electric unit harness connector. Reconnect ABS actuator and electric unit harness connector. Then retest.
NG	▶	**Check the following.** ● Harness connector E1 ● Harness for open or short between ABS actuator and electric unit and ground If NG, repair harness or connectors.

5	CHECK FUSE	
Check 10A fuse 31 (Engine control) for control unit. Refer to POWER SUPPLY ROUTING in EL section. **Is fuse OK?**		
Yes	▶	GO TO 6.
No	▶	Replace fuse.

6	CHECK ABS ACTUATOR AND ELECTRIC UNIT POWER SUPPLY CIRCUIT	
Check continuity between battery and ABS actuator and electric unit connector terminal 15. **Does continuity exist?**		
Yes	▶	Check battery. Refer to BATTERY in EL section.
No	▶	**Check the following.** ● Harness connector E1 ● Harness for open or short between ABS actuator and electric unit and fuse If NG, repair harness or connectors.

Control Unit

NJBR0103

DIAGNOSTIC PROCEDURE

NJBR0103S01

(Malfunction code No. 71 for models with self-diagnosis function)

1	INSPECTION START	
ABS actuator and electric unit power supply and ground circuit inspection 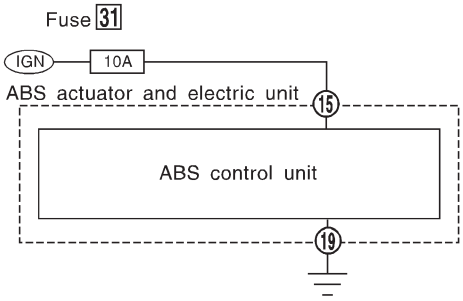 SBR626E		
	▶	GO TO 2.

2	CHECK CONNECTOR	
1. Disconnect ABS actuator and electric unit connector. Check terminals for damage or loose connections and replace. Then reconnect connector. 2. Carry out self-diagnosis again. **Does warning lamp activate again?**		
Yes	▶	GO TO 3.
No	▶	**INSPECTION END**

3	CHECK ABS ACTUATOR AND ELECTRIC UNIT POWER SUPPLY CIRCUIT	
Check voltage. Refer to "3. CHECK ABS ACTUATOR AND ELECTRIC UNIT POWER SUPPLY CIRCUIT" in "Low Voltage", BR-86. **Does battery voltage exist when ignition switch is turned ON?**		
Yes	▶	GO TO 4.
No	▶	Repair.

4	CHECK WARNING LAMP INDICATION	
Does warning lamp indicate code No. 71 again?		
Yes	▶	Replace ABS actuator and electric unit.
No	▶	Inspect the system according to the code No.

1. ABS Works Frequently

NJBR0104

1	CHECK BRAKE FLUID PRESSURE	
Check brake fluid pressure distribution. **Is brake fluid pressure distribution normal?**		
Yes	▶	GO TO 2.
No	▶	Perform Preliminary Check. Refer to BR-72.

2	CHECK WHEEL SENSOR	
1. Check wheel sensor connector for terminal damage or loose connections. 2. Perform wheel sensor mechanical check. Refer to “Wheel Sensor or Rotor”, BR-78. **Are wheel sensors functioning properly?**		
Yes	▶	GO TO 3.
No	▶	Repair.

3	CHECK FRONT AXLE	
Check front and rear axles for excessive looseness. Refer to AX section, “Front Wheel Bearing”, “ON-VEHICLE SERVICE” and “Rear Wheel Bearing”, “ON-VEHICLE SERVICE”. **Is front axle installed properly?**		
Yes	▶	Go to “3. CHECK WARNING LAMP INDICATION” in “2. Unexpected Pedal Action”, BR-89.
No	▶	Repair.

2. Unexpected Pedal Action

NJBR0105

1	CHECK BRAKE PEDAL STROKE	
Check brake pedal stroke. Is stroke excessively large?		
Yes	▶	Perform Preliminary Check. Refer to BR-72.
No	▶	GO TO 2.

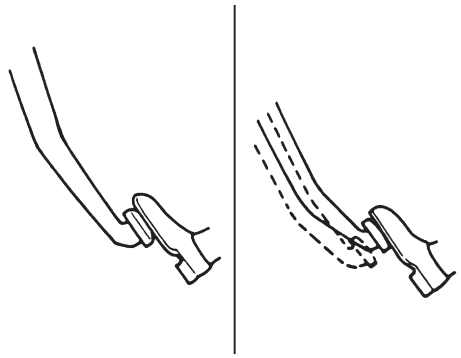

SBR540A

2	CHECK CONNECTOR AND PERFORMANCE	
1. Disconnect ABS actuator and electric unit connector. 2. Check whether brake is effective.		
	OK or NG	
Yes	▶	GO TO 3.
No	▶	Perform Preliminary Check. Refer to BR-72.

3	CHECK WARNING LAMP INDICATION	
Ensure warning lamp remains off while driving.		
	Is warning lamp turned off?	
Yes	▶	GO TO 4.
No	▶	Carry out self-diagnosis. Refer to BR-63, BR-65.

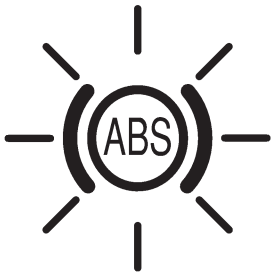

SBR759E

4	CHECK WHEEL SENSOR	
1. Check wheel sensor connector for terminal damage or loose connection. 2. Perform wheel sensor mechanical check.		
	Is wheel sensor mechanism OK?	
Yes	▶	Check ABS actuator and electric unit pin terminals for damage or the connection of ABS actuator and electric unit harness connector. Reconnect ABS actuator and electric unit harness connector. Then retest.
No	▶	Repair.

3. Long Stopping Distance

NJBR0106

1	CHECK CONNECTOR AND PERFORMANCE	
1. Cancel ABS by disconnecting ABS actuator and electric unit connector. 2. Check whether stopping distance is still long.		
	OK or NG	
OK	▶	Perform Preliminary Check and air bleeding.
NG	▶	Go to "3. CHECK WARNING LAMP INDICATION" in "2. Unexpected Pedal Action", BR-89.

NOTE:
Stopping distance may be longer than vehicles without ABS when road condition is slippery.

4. ABS Does Not Work

NJBR0107

1	CHECK WARNING LAMP INDICATION	
Does the ABS warning lamp activate?		
Yes	▶	Carry out self-diagnosis. Refer to BR-63, BR-65.
No	▶	Go to “3. CHECK WARNING LAMP INDICATION” in “2. Unexpected Pedal Action”, BR-89.

NOTE:
ABS does not work when vehicle speed is under 10 km/h (6 MPH).

5. Pedal Vibration and Noise

=NJBR0108

1	INSPECTION START
Pedal vibration and noise inspection 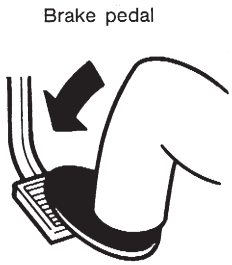 SAT797A	
▶	GO TO 2.

2	CHECK SYMPTOM
1. Apply brake. 2. Start engine. **Does the symptom appear only when engine is started?**	
Yes ▶	Carry out self-diagnosis. Refer to BR-63, BR-65.
No ▶	GO TO 3.

3	RECHECK SYMPTOM
Does the symptom appear when electrical equipment switches (such as headlamp) are operated?	
Yes ▶	GO TO 4.
No ▶	Go to “3. CHECK WARNING LAMP INDICATION” in “2. Unexpected Pedal Action”, BR-89.

4	CHECK WHEEL SENSOR
Check wheel sensor shield ground. For location of shield ground, refer to wiring diagram and “HARNESS LAYOUT” in EL section. **Is wheel sensor shield grounded properly?**	
Yes ▶	Check ABS actuator and electric unit pin terminals for damage or the connection of ABS actuator and electric unit harness connector. Reconnect ABS actuator and electric unit harness connector. Then retest.
No ▶	Repair.

NOTE:
ABS may operate and cause vibration under any of the following conditions.

- Applying brake gradually when shifting or operating clutch.
- Low friction (slippery) road.
- High speed cornering.
- Driving over bumps and pot holes.
- Engine speed is over 5,000 rpm with vehicle stopped.

6. ABS Warning Lamp Does Not Come On When Ignition Switch Is Turned On

=NJBR0109

1	INSPECTION START

Warning lamp circuit inspection

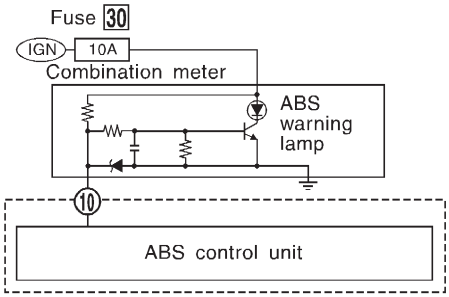

SBR762E

	▶	GO TO 2.

2	CHECK FUSE

Check 10A fuse No. 30 for warning lamp. For fuse layout, refer to “POWER SUPPLY ROUTING” in EL section.

Is fuse OK?

Yes	▶	GO TO 3.
No	▶	Replace fuse.

3	CHECK ABS CONTROL UNIT POWER SUPPLY CIRCUIT

1. Install 10A fuse.
2. Disconnect ABS actuator and electric unit connector.
3. Check voltage between control unit connector terminal 10 and ground after turning ignition switch “ON”.

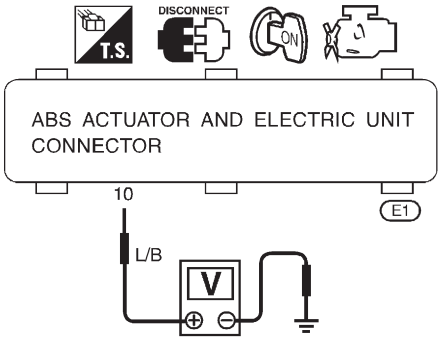

SBR628E

Does battery voltage exist after turning ignition switch “ON”?

Yes	▶	GO TO 5.
No	▶	GO TO 4.

4	CHECK WARNING LAMP INDICATION	
Disconnect ABS actuator and electric unit connector.		
Does the ABS warning lamp activate?		
Yes	▶	GO TO 6.
No	▶	GO TO 5.

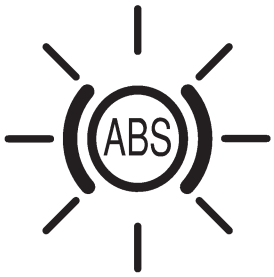

SBR759E

5	CHECK HARNESS FOR SHORT	
1. Disconnect ABS actuator and electric unit connector. 2. Check voltage between ABS actuator and electric unit connector terminal 10 and ground.		
Does battery voltage exist?		
Yes	▶	Check combination meter. Refer to WARNING LAMPS in EL section.
No	▶	Repair harness and connectors between fuse and ABS actuator and electric unit connector terminal 10.

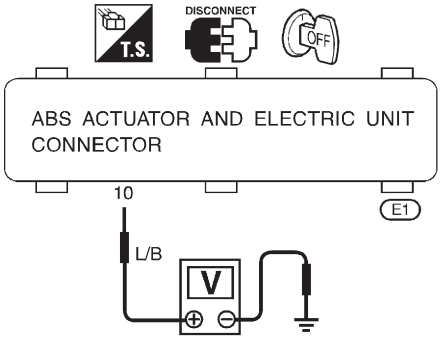

SBR144EF

6	CHECK HARNESS CONNECTOR	
Check ABS actuator and electric unit pin terminals for damage or connection of ABS actuator and electric unit harness connector. Reconnect ABS actuator and electric unit harness connector. Then reset.		
OK	▶	**INSPECTION END**
NG	▶	Replace ABS actuator and electric unit.

7. ABS Warning Lamp Stays On When Ignition Switch Is Turned On

=NJBR0110

1	INSPECTION START

ABS control unit inspection

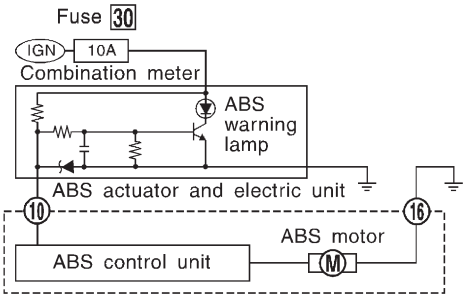

SBR763E

▶	GO TO 2.

2	CHECK WARNING LAMP

1. Disconnect ABS actuator and electric unit connector.
2. Connect suitable wire between ABS actuator and electric unit connector terminal 10 and ground.

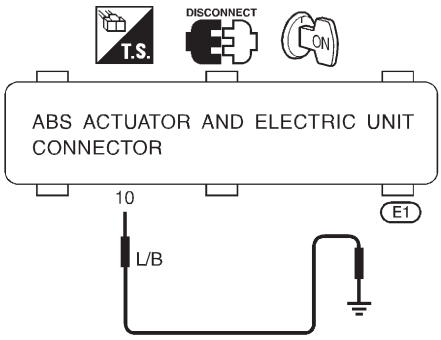

SBR146EE

Does warning lamp activate?

Yes	▶	GO TO 3.
No	▶	**Repair combination meter. Check the following.** ● Harness connector E1 ● Harness for open or short between ABS actuator and electric unit and fuse If NG, repair harness or connector.

3	CHECK HARNESS CONNECTOR

Check ABS actuator and electric unit pin terminals for damage or the connection of ABS actuator and electric unit harness connector. Reconnect ABS actuator and electric unit harness connector. Then retest.

OK	▶	**INSPECTION END**
NG	▶	GO TO 4.

4	CHECK ABS MOTOR GROUND

1. Turn ignition switch "OFF".
2. Disconnect ABS actuator and electric unit connector.
3. Check continuity between ABS actuator and electric unit connector terminal 16 and ground.

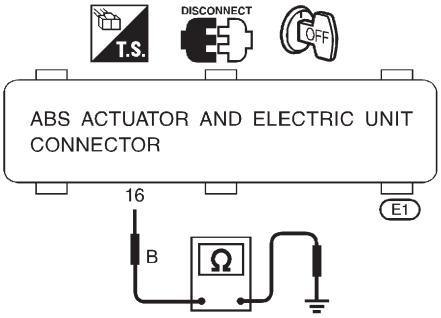

SBR147EC

Does continuity exist?

Yes	▶	Replace ABS actuator and electric unit.
No	▶	**Check the following.** ● Harness connector E1 ● Harness for open or short between ABS actuator and electric unit and ground If NG, repair harness or connector.

REMOVAL AND INSTALLATION

CAUTION:
Be careful not to damage sensor edge and sensor rotor teeth. When removing the front or rear wheel hub assembly, first remove the ABS wheel sensor from the assembly. Failure to do so may result in damage to the sensor wires making the sensor inoperative.

Wheel Sensors

NJBR0111S01

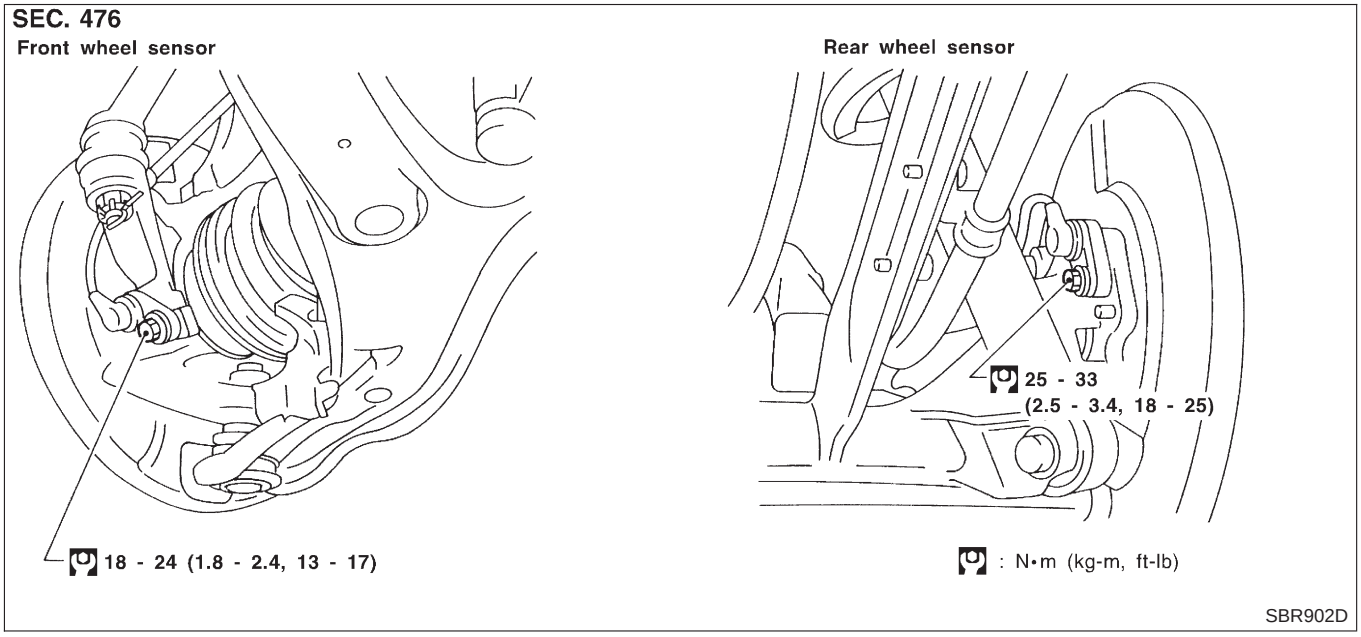

ABS Actuator and Electric Unit

NJBR0111S10

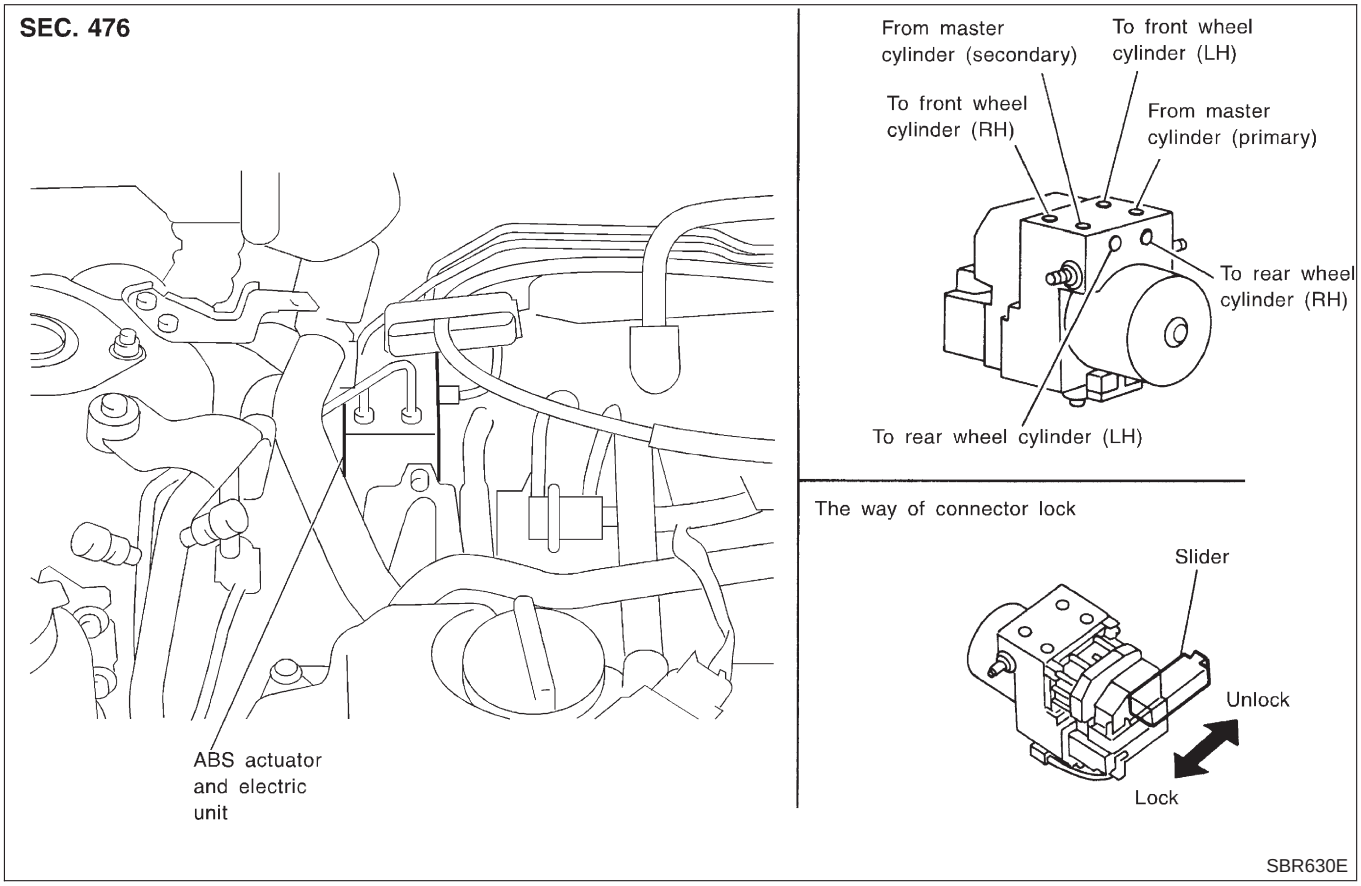

REMOVAL

NJBR0111S1001

1. Disconnect battery cable.
2. Drain brake fluid.
3. Remove mounting bracket fixing bolts and nuts.
4. Disconnect connector, brake pipes and remove fixing nuts.

INSTALLATION

NJBR0111S1002

CAUTION:

After installation, refill brake fluid. Then bleed air.

1. Connect brake pipes temporarily.
2. Tighten fixing bolts and nuts.
3. Tighten brake pipes.
4. Connect connector and battery cable.

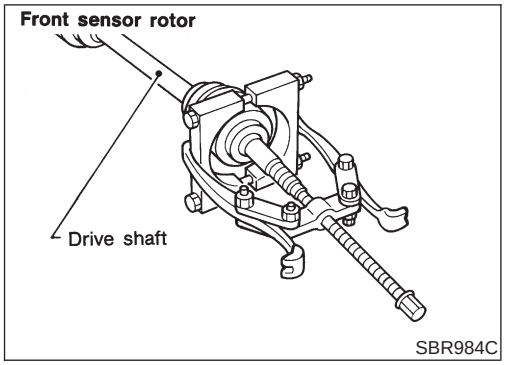

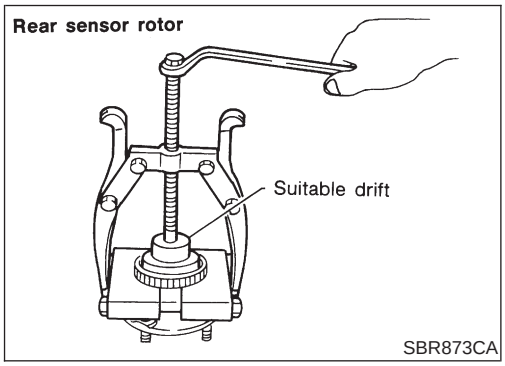

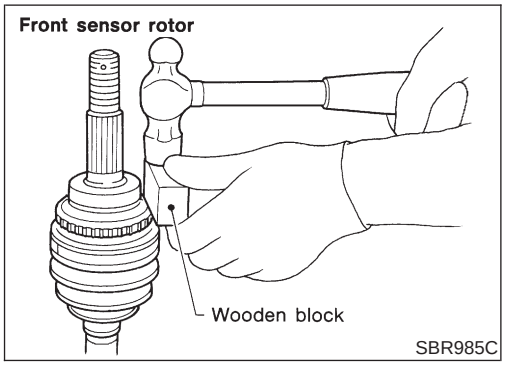

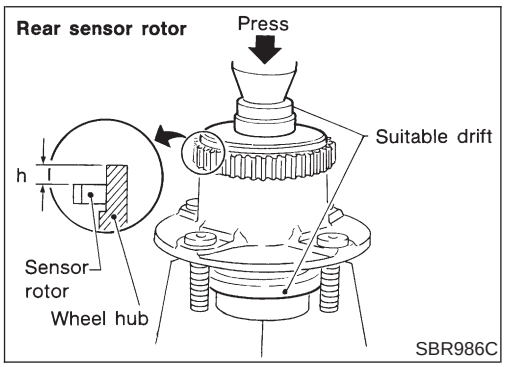

Sensor Rotor

NJBR0111S02

REMOVAL

NJBR0111S0201

1. Remove the drive shaft and rear wheel hub. Refer to “Drive Shaft” and “Wheel Hub” in AX section.
2. Remove the sensor rotor using suitable puller, drift and bearing replacer.

INSTALLATION

NJBR0111S0202

Install the sensor rotor. For front sensor rotor, use hammer and wooden block. For rear sensor rotor, use suitable drift and press.

- Always replace sensor rotor with new one.

- Pay attention to the dimension of rear sensor rotor as show in figure.

  h: 17.7 - 18.7 mm (0.697 - 0.736 in)

General Specifications

NJBR0077

Unit: mm (in)

Applied model		For Europe		
Engine		QG15DE		Except QG15DE
ABS		Without ABS	Optional	—
Front brake	Brake model	CL25VG	CL25VBG	
	Cylinder bore diameter	57.2 (2.252)		
	Pad Length × width × thickness	113.1 × 45.5 × 11.0 (4.45 × 1.791 × 0.433)	108.8 × 47.7 × 11.0 (4.28 × 1.878 × 0.433)	
	Rotor outer diameter × thickness	257 × 22 (10.12 × 0.87)	280 × 22 (11.02 × 0.87)	

Unit: mm (in)

Body		Sedan		Hatchback		
Grade		LX	Except LX			
ABS		Without ABS	With ABS	—		
Rear brake	Brake model	LT20N	CL9HC	LT20N	CL9HCG (Cam & strut type)	CL11HEG (Ball & Ramp type)
	Cylinder bore diameter	17.46 (0.6874)	33.9 (1.335)	17.46 (0.6874)	33.96 (1.3370)	38.2 (1.504)
	Lining or pad Length × width × thickness	195 × 35 × 4.5 (7.68 × 1.38 × 0.18)	89.1 × 39.5 × 10.0 (3.508 × 1.555 × 0.394)	195 × 35 × 4.5 (7.68 × 1.38 × 0.18)	79.8 × 38.5 × 9.3 (3.142 × 1.516 × 0.366)	
	Drum inner diameter or rotor outer diameter × thickness	203.2 (8.00)	258 × 9 (10.16 × 0.35)	203.2 (8.00)	258 × 9 (10.16 × 0.35)	
Master cylinder	Cylinder bore diameter	23.81 (15/16)				
Control valve	Valve model	Dual proportioning valve [Except 4-door Sedan for Europe (RHD with optional ABS, and LHD with gasoline engine and optional ABS)]				
	Split point kPa (bar, kg/cm^2, psi) × reducing ratio	3,923 (39.2, 40, 569) × 0.4				

Unit: mm (in)

Applied model			For Europe			
Body			Sedan		Hatchback	
Engine			QG15DE, QG18DE	YD22DDT	QG15DE, QG18DE	YD22DDT
ABS			Optional	Without ABS	—	Optional	—
Brake booster	Booster model		M215T	S255	M215T	S255, V255
	Diaphragm diameter	Primary	230 (9.06)	255 (10.04)	230 (9.06)	255 (10.04)
		Secondary	205 (8.07)	—	205 (8.07)	—
Recommended brake fluid			DOT 4			

Disc Brake

NJBR0078

Unit: mm (in)

Brake model		CL25A, CL25VG, CL25VBG	CL9HCG, CL11HEG
Pad wear limit	Minimum thickness	2.0 (0.078)	2.0 (0.079)
Rotor repair limit	Maximum runout	0.07 (0.0028)	0.07 (0.0028)
	Minimum thickness	20.0 (0.787)	9 (0.35)

Drum Brake

NJBR0135

Unit: mm (in)

Brake model		LT20N
Lining wear limit	Minimum thickness	1.5 (0.059)
Drum repair limit	Maximum inner diameter	204.5 (8.051)
	Maximum out-of-round	0.03 (0.0012)

Brake Pedal

NJBR0079

Unit: mm (in)

Free height “H”*	LHD	M/T	156.0 - 166.0 (6.14 - 6.54)
		A/T	165.0 - 175.0 (6.54 - 6.89)
	RHD	M/T	155.0 - 165.0 (6.10 - 6.50)
		A/T	164.0 - 174.0 (6.46 - 6.85)
Clearance “C” between pedal stopper and threaded end of stop lamp switch or brake switch			0.74 - 1.96 (0.0291 - 0.0772)

*: Measured from surface of dash panel to surface of pedal pad

Parking Brake

NJBR0080

Type		Center lever
Number of notches [under force of 196 N (20 kg, 44 lb)]	Sedan	8 - 9
	Hatchback	4 - 6
Number of notches when warning lamp switch comes on		1