■ CHARGING SYSTEM

1. General

- Instead of a conventional type alternator, a compact and lightweight segment conductor type alternator is used. This type of alternator generates a high amperage output in a highly efficient manner.
- This alternator uses a joined segment conductor system, in which multiple segment conductors are welded together at the stator. Compared to the conventional winding system, the electrical resistance is reduced due to the shape of the segment conductors, and their arrangement helps to make the alternator more compact.
- The charging control system, which controls the voltage generated by the alternator according to the vehicle driving conditions, is used to improve fuel consumption. For details, see page EG-79.

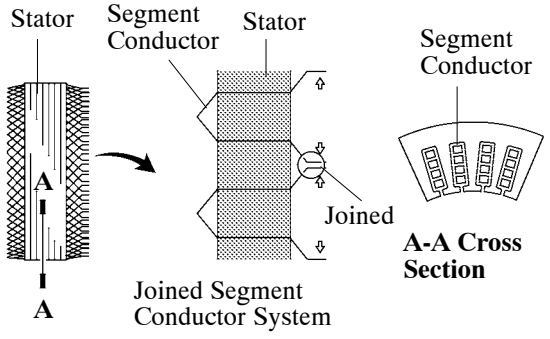

Segment Conductor Type Alternator

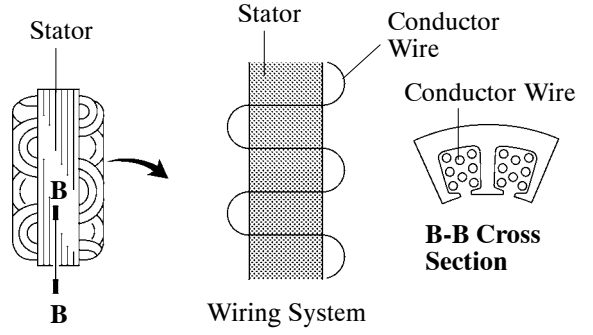

Conventional Type Alternator

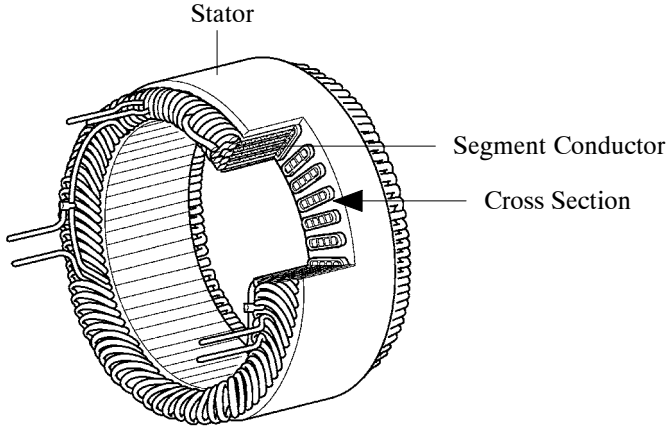

Stator of Segment Conductor Type Alternator

▶ Specification ◀

Rated Voltage	12 V
Output Rated	150 A

▶ Wiring Diagram ◀

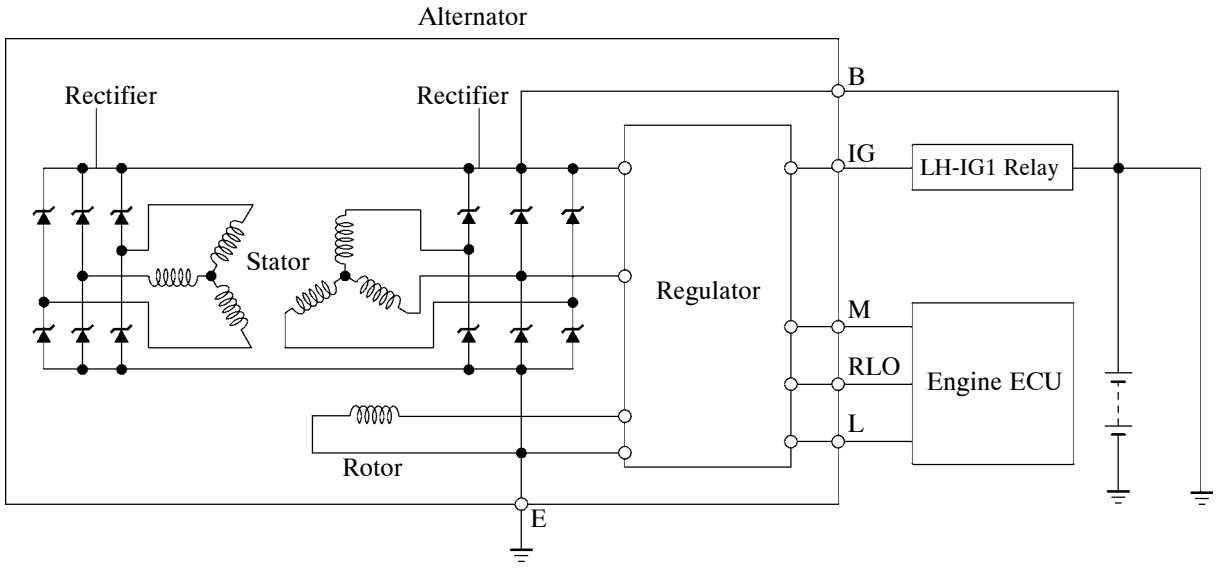

0150EG13C

2. Dual Winding System

A dual winding system is used. This system consists of two sets of three-phase windings whose phases are staggered 30°. This system results in the reduction of both electrical noise (ripple and spike), and magnetic noise (a hum that is heard as alternator load is increased). This system significantly suppresses noise at the source (alternator). Because the waves that the respective windings generate have opposite polarities, magnetic noise is reduced. The magnetic noise is significantly reduced, but the electrical power generated does not cancel itself out due to the use of separate rectifiers. The opposite polarities that are generated can be seen below.

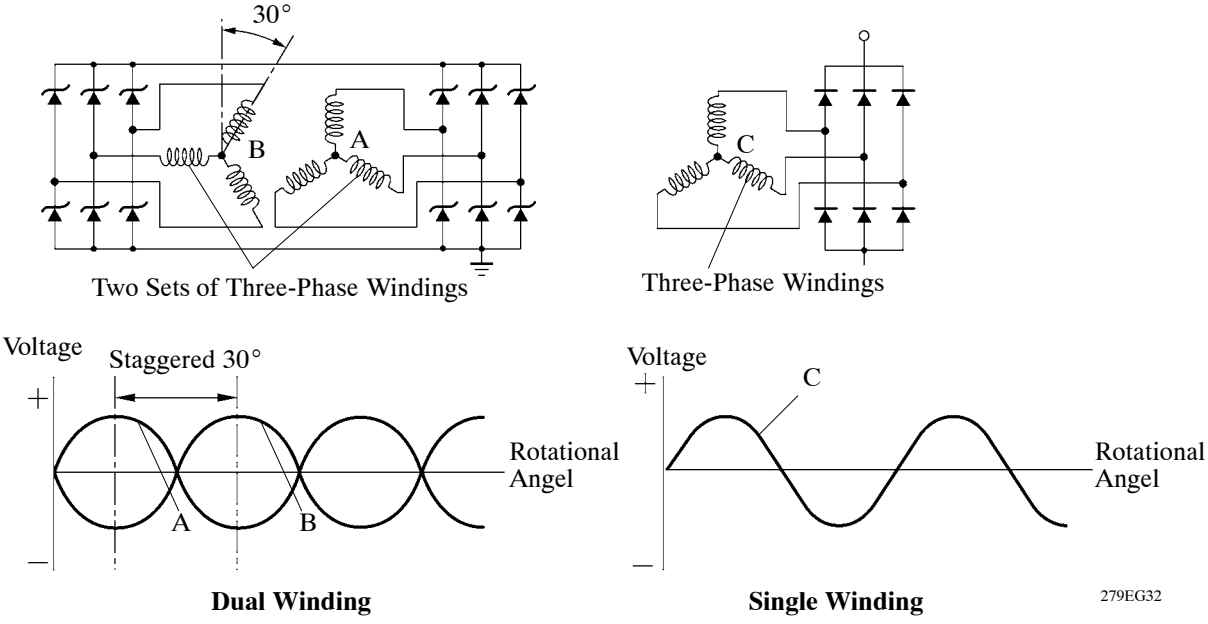

279EG32

3. Alternator Pulley

A one-way clutch is integrated in the alternator pulley. Operation of the one-way clutch cancels alternator pulley inertia and helps to prevent slipping of the V-ribbed belt. This allows the use of a low tension V-ribbed belt that achieves reduced friction.

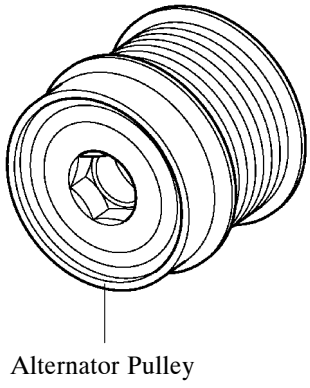

281EG12

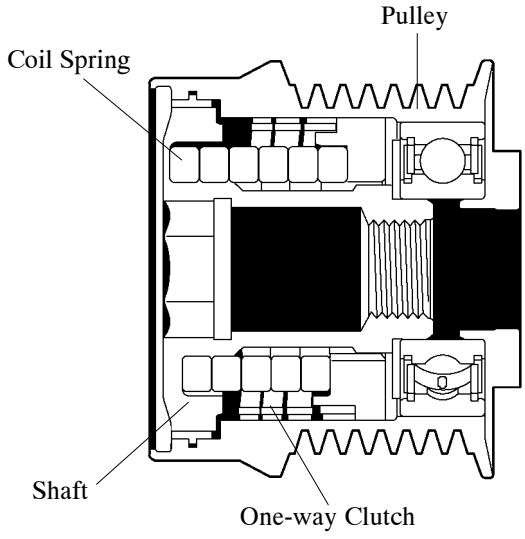

281EG13